Sudesh K. Gambhir
Vice President, Technical Services
P.O. Box 968, Mail Drop PE04
Richland, WA 99352-0968
Ph. 509-377-8313 F. 509-377-2354
sgambhir@energy-northwest.com

September 22, 2009
GO2-09-134

10 CFR 50.55a

U. S. Nuclear Regulatory Commission
ATTN: Document Control Desk
Washington, D.C. 20555-0001

Subject: **COLUMBIA GENERATING STATION, DOCKET NO. 50-397 INSERVICE INSPECTION SUMMARY REPORT FOR REFUELING OUTAGE R-19**

Dear Sir or Madam:

The Columbia Generating Station Inservice Inspection Summary Report for the R-19 Maintenance and Refueling Outage is enclosed. This report is submitted in accordance with Section XI of the American Society of Mechanical Engineers (ASME) Boiler and Pressure Vessel Code Article IWA-6240. Pursuant to ASME Code Section XI, Article IWA-6230, the NIS-1 Owner's Report for Inservice Inspection and NIS-2 Owner's Report for Repair/Replacement Activity are included.

There are no regulatory commitments contained in this letter or its enclosure. If you have any questions or desire additional information regarding this matter, please contact Mr. MC Humphreys at (509) 377-4025.

Respectfully,

SK Gambhir
Vice President, Technical Services

Enclosure: Inservice Inspection Summary Report for Third Inspection Interval First Inspection Period Refueling Outage R19

cc: EE Collins, Jr. – NRC RIV
NJ DiFrancesco – NRC NRR
NRC Senior Resident Inspector/988C
RN Sherman – BPA/1399
WA Horin – Winston & Strawn

A047
NRR

INSERVICE INSPECTION SUMMARY REPORT
FOR
THIRD INSPECTION INTERVAL
FIRST INSPECTION PERIOD
REFUELING OUTAGE R19

OWNER: Energy Northwest
Columbia Generating Station
76 North Power Plant Loop
Richland, Washington 99354

PLANT: Columbia Generating Station
76 North Power Plant Loop
Richland, Washington 99354

COMMERCIAL SERVICE DATE: December 13, 1984

CAPACITY: 3486 Megawatts Thermal

REACTOR PRESSURE VESSEL: Manufacturer: CBIN
Serial Number: T-45
State No.: 29936-84W
National Board No.: CBIN-8

Prepared By: _____ 8/31/09
ISI Engineer Date

_____ 8/31/09
Repair Replacement Program Lead Engineer Date

Reviewed By: _____ 9/1/09
NDE Lead Date

Approved By: _____ 9/1/09
ISI Engineer's Supervisor Date

Concurrence: Frank A. Allgaier 9-1-09
Authorized Nuclear Inservice Inspector Date

SUMMARY

Columbia Generating Station has completed American Society of Mechanical Engineers Boiler and Pressure Vessel Code (ASME) Section XI examinations for the nineteenth (19) refueling outage.

This report summarizes the results of inservice inspection (ISI) activities of ASME Section III, Code Class 1 and 2 components performed at Columbia Generating Station between June 26, 2007 and June 26, 2009. General Electric (GE), Underwater Engineering Services Inc (UESI), and Energy Northwest personnel performed the examinations. During this period, Columbia Generating Station completed its nineteenth scheduled refueling outage, R19. This outage is the second refueling outage of the third inspection interval. This report includes a copy of the NIS-1 Owner's Report of Inservice Inspection for this refueling outage in Appendix A and copies of the NIS-2 Owner's Reports of Repair or Replacement in Appendix B.

Documentation supporting this summary report is located in the Columbia Generating Station files (DIC 1100).

The ISI examinations are specified in ASME Section XI and required by 10CFR50.55a.

SNUBBER TESTING (ISI PROGRAM PLAN SECTION 6.2)

An initial sample of thirty-seven (37) snubbers was selected from the Columbia Generating Station general population of 355 safety-related snubbers. These snubbers were randomly selected by computer subroutine that is part of the ISI System database. The selected snubbers were then reviewed to determine if the sample was representative, as required by Licensee Controlled Specification Basis SR 1.7.3.1.e.

Testing of snubbers was performed using portable test devices called "Validators", supplied by the snubber manufacturer. All testing results were acceptable. The snubbers tested are listed on the NIS-1 Owner's Report of Inservice Inspection form in Appendix A.

REPAIRS AND REPLACEMENTS ACTVITIES

ASME Section XI repair and replacement activities were performed in six (6) significant areas during the R19 as listed below. A listing and NIS-2 Owner's Reports for these and other ASME Section XI repair and replacement work accomplished and closed out between June 26, 2007 and June 24, 2009 are provided in Appendix B.

1) Main Steam Relief Valves (MSRV's)

Refurbished the following main steam relief valves. These main steam relief valves were refurbished by NWS Technologies, LLC, 131 Venture Boulevard, Spartanburg, SC 29301. The refurbishment work was performed in accordance with NWS Technologies, LLC VR and NR programs:

Refurbished MSRV S/N N63790-03-0046
Refurbished MSRV S/N N63790-03-0047
Refurbished MSRV S/N N63790-03-0049
Refurbished MSRV S/N N63790-03-0053
Refurbished MSRV S/N N63790-03-0059
Refurbished MSRV S/N N63790-03-0062
Refurbished MSRV S/N N63790-03-0137

Replaced the following main steam relief valves:

Replaced existing relief valve MS-RV-1C with spare S/N N63790-03-0046
Replaced existing relief valve MS-RV-2C with spare S/N N63790-03-0047
Replaced existing relief valve MS-RV-3C with spare S/N N63790-03-0053
Replaced existing relief valve MS-RV-5C with spare S/N N63790-03-0059
Replaced existing relief valve MS-RV-1D with spare S/N N63790-03-0049
Replaced existing relief valve MS-RV-3D with spare S/N N63790-03-0137
Replaced existing relief valve MS-RV-4D with spare S/N N63790-03-0062

2) Relief Valves

Replaced miscellaneous relief valves such as CCH-RV-2A, CCH-RV-2B, RCC-RV-34B, RCIC-RV-19T, RHR-RV-1A, SLC-RV-21A, SLC-RV-29A, SLC-RV-29B, SW-RV-1A and SW-RV-1B.

3) Valves

Replaced miscellaneous valves such as CEP-V-800/12, RCIC-V-54, RHR-V-622A, RHR-V-604, RHR-V-605, SW-V-113, SW-V-194 and SW-V-155W.

4) Snubbers

Replaced snubbers for the following supports:

Replaced snubber for support RHR-SA-32(W)
Replaced snubber for support RHR-SA-52
Replaced snubber for support MSRV-2D-2
Replaced snubber for support MSRV-1D-3
Replaced snubber for support MSRV-3C-2
Replaced snubber for support MSRV-2A-2
Replaced snubber for support MS-167(B)
Replaced snubber for support MS-1002N(N)
Replaced snubber for support MS-1010N(E)
Replaced snubber for support MS-48
Replaced snubber for support MS-167(T)
Replaced snubber for support MS-999N

5) Control Rod Drive (CRD) Assemblies

Overhauled the following Control Rod Drive (CRD) assemblies:

Overhauled Control Rod Drive (CRD) Serial No 6447
Overhauled Control Rod Drive (CRD) Serial No 7585A
Overhauled Control Rod Drive (CRD) Serial No 7091
Overhauled Control Rod Drive (CRD) Serial No A8748
Overhauled Control Rod Drive (CRD) Serial No A8926
Overhauled Control Rod Drive (CRD) Serial No 7388
Overhauled Control Rod Drive (CRD) Serial No 5393
Overhauled Control Rod Drive (CRD) Serial No 6309
Overhauled Control Rod Drive (CRD) Serial No 5485
Overhauled Control Rod Drive (CRD) Serial No 6246
Overhauled Control Rod Drive (CRD) Serial No 7155
Overhauled Control Rod Drive (CRD) Serial No 6651

Overhauled Control Rod Drive (CRD) Serial No A8548
Overhauled Control Rod Drive (CRD) Serial No A8727

Replaced Control Rod Drive (CRD) assemblies at the following reactor pressure vessel (RPV) core locations:

Replaced Control Rod Drive (CRD) at RPV Core Location 18-19
Replaced Control Rod Drive (CRD) at RPV Core Location 18-51
Replaced Control Rod Drive (CRD) at RPV Core Location 18-59
Replaced Control Rod Drive (CRD) at RPV Core Location 22-39
Replaced Control Rod Drive (CRD) at RPV Core Location 22-43
Replaced Control Rod Drive (CRD) at RPV Core Location 22-59
Replaced Control Rod Drive (CRD) at RPV Core Location 26-03
Replaced Control Rod Drive (CRD) at RPV Core Location 26-27
Replaced Control Rod Drive (CRD) at RPV Core Location 06-19
Replaced Control Rod Drive (CRD) at RPV Core Location 06-35
Replaced Control Rod Drive (CRD) at RPV Core Location 10-47
Replaced Control Rod Drive (CRD) at RPV Core Location 14-15
Replaced Control Rod Drive (CRD) at RPV Core Location 14-23
Replaced Control Rod Drive (CRD) at RPV Core Location 34-07
Replaced Control Rod Drive (CRD) at RPV Core Location 34-15
Replaced Control Rod Drive (CRD) at RPV Core Location 34-39
Replaced Control Rod Drive (CRD) at RPV Core Location 38-07
Replaced Control Rod Drive (CRD) at RPV Core Location 38-15
Replaced Control Rod Drive (CRD) at RPV Core Location 38-39
Replaced Control Rod Drive (CRD) at RPV Core Location 38-51
Replaced Control Rod Drive (CRD) at RPV Core Location 38-59
Replaced Control Rod Drive (CRD) at RPV Core Location 42-43
Replaced Control Rod Drive (CRD) at RPV Core Location 46-43
Replaced Control Rod Drive (CRD) at RPV Core Location 50-11
Replaced Control Rod Drive (CRD) at RPV Core Location 54-15

Installed replacement cap screws for all Control Rod Drive (CRD) assemblies bolted flanged connections at the above listed reactor pressure vessel (RPV) core locations - Eight (8) cap screws for each bolted flanged connection.

6) <u>Pumps</u>

Replaced pump HPCS-P-2.

APPENDIX A

NIS-1 Owner's Report for Inservice Inspection

DIC 1103.3

FORM NIS-1 OWNERS REPORT FOR INSERVICE INSPECTIONS
As Required by the Provisions of the ASME Code Rules

1. Owner Energy Northwest, Columbia Generating Station, North Power Plant Loop, Richland, WA 99352
(Name and Address of Owner)

2. Plant Columbia Generating Station, North Power Plant Loop, Richland, WA 99352
(Name and Address of Plant)

3. Plant Unit NA 4. Owner Certificate of Authorization (if required) NA

5. Commercial Service Date 12/13/1984 6. National Board Number for Unit CBIN-8

Component or Appurtenance	Manufacturer or Installer	Manufacturer or Installer Serial No.	State or Province no.	National Board No.
RPV	CBIN Nuclear Company	T-45	29936-84W	CBIN-8
MS-RV-2A	Crosby Valve and Gage Co	N63790-03-0051	NA	NA
MS-RV-3A	Crosby Valve and Gage Co	N63790-03-0058	NA	NA
MS-RV-1C	Crosby Valve and Gage Co	N63790-03-0046	NA	NA
MS-RV-2C	Crosby Valve and Gage Co	N63790-03-0047	NA	NA
MS-RV-3C	Crosby Valve and Gage Co	N63790-03-0053	NA	NA
MS-RV-5C	Crosby Valve and Gage Co	N63790-03-0059	NA	NA
MS-RV-1D	Crosby Valve and Gage Co	N63790-03-0049	NA	NA
MS-RV-3D	Crosby Valve and Gage Co	N63790-03-0137	NA	NA
MS-RV-4D	Crosby Valve and Gage Co	N63790-03-0062	NA	NA
MS-V-22D	Rockwell Mfg. Co	JT-41	NA	68
RHR-V-50A	Velan Engineering Co	0415	NA	NA
RFW-V-10A	Anchor/Darling Valve Co.	IN-260	NA	NA
RFW-V-32A	Anchor/Darling Valve Co.	IN-109	NA	NA
RFW-V-32B	Anchor/Darling Valve Co.	IN-110	NA	NA
RHR-HX-1A	Delta Southern Co.	35009-74-1	29911-84W	3489
RHR-P-2B	Ingersoll-Rand Co.	0473111	NA	47
Containment	PDM	12764	29935-84W	790
Piping	Bechtel	NA	NA	NA

Note: Supplemental sheets in form of lists, sketches, or drawings may be used, provided (1) size is 8-1/2 in. x 11 in., (2) information in items 1 through 6 on this report is included on each sheet, and (3) each sheet is numbered and the number of sheets is recorded at the top of this form.

This Form (E00029) may be obtained from the ASME Order Dept., 22 Law Drive, Box 2300, Fairfield, NJ 07007-2300

FORM NIS-1 (Back)

8. Examination Dates 6/26/2007 to 6/24/2009

9. Inspection Period Identification: Inspection Period 1 (12/13/2005 – 12/12/2009)

10. Inspection Interval Identification Inspection Interval 3 (12/13/2005 – 12/12/2015)

11. Applicable Edition of Section XI 2001 Addenda 2003

12. Date / Revision of Inspection Plan : April 2009 Revision 3

13. Abstract of Examinations and Tests. Include a list of examinations and tests and a statement concerning the status of work required for Inspection Plan See Attachment 1

14. Abstract of Results of Examinations and Tests. See Attachment 1

15. Abstract of Corrective Measures. See Attachment 1

We certify that a) the statements made in this report are correct, b) the examinations and tests meet the Inspection Plan as required by the ASME Code, Section XI, and c) corrective measures taken conform to the rules of the ASME Code, Section XI.

Certificate of Authorization No. (if applicable) NA Expiration Date NA

Date 8/18/09 Signed Energy Northwest Owner By

CERTIFICATE OF INSERVICE INSPECTION

I, the undersigned, holding a valid commission issued by the National Board of Boiler and Pressure Vessel Inspectors and/or the State or Province of Washington and employed by Hartford Steam Boiler of CT of Hartford, Connecticut have inspected the components described in this Owner's Report during the period 6/26/2007 to 6/24/2009, and state that to the best of my knowledge and belief, the Owner has performed examinations and tests and taken corrective measures described in this Owner's Report in accordance with the Inspection Plan and as required by the ASME Code, Section XI.

By signing this certificate neither the Inspector nor his employer makes any warranty, expressed or implied, concerning the examinations, tests, and corrective measures described in this Owner's Report. Furthermore, neither the Inspector nor his employer shall be liable in any manner for any personal injury or property damage or a loss of any kind arising from or connected with this inspection.

Frank A Allga (Inspector's Signature) Commissions 13324 ANI 13324 W Nat'l. Board (incl. endorsements), State, Province, and No.]

Date 8-28-09

NIS-1 FORM Continued

1. Owner Energy Northwest, Columbia Generating Station, North Power Plant Loop, Richland, WA 99352
2. Plant Columbia Generating Station, North Power Plant Loop, Richland, WA 99352
3. Plant Unit: NA 4. Owner Certificate of Authorization (if required) NA
5. Commercial Service Date 12/13/1984 6. National Board Number for Unit CBIN-8

ATTACHMENT 1

13. Abstract of Examinations and Tests. Include a list of examinations and tests and a statement concerning the status of work required for Inspection Plan

The following table summarizes the snubber test results for this reporting period. Testing was per relief request 3ISI-07. All snubber functional tests were acceptable. None of the tested snubbers require testing at the next refueling outage. Testing results are documented in plant procedure TSP-SNUBBER-R702 work order 01142084.

Snubbers Tested During Refuel R19			
Snubber Mark Number	Position (1)	Description	Serial No.
DE-2838-18	UA	PSA-1/4 SNUBBER	434
DE-49	UA	PSA-3 SNUBBER	2354
FPC-908N	E	PSA-1 SNUBBER	22347
HPCS-47	S	PSA-3 SNUBBER	485
MS-1003N	E	PSA-10 SNUBBER	10928
MS-1005N	UA	PSA-35 SNUBBER	10736
MS-1010N	E	PSA-10	17372
MS-114	S	PSA-10 SNUBBER	7122
MS-1368-12	UA	PSA-1/2 SNUBBER	14987
MS-151	BM	PSA-3 SNUBBER	10529
MS-4448-46	UA	PSA-1/4 SNUBBER	433
MS-91	E	PSA-3 SNUBBER	9891
MSRV-1B-2	UA	PSA-10 SNUBBER	13035
MSRV-2D-2	UA	PSA-10 SNUBBER	326
MSRV-3A-2	UA	PSA-10 SNUBBER	703
MSRV-3C-2	UA	PSA-10 SNUBBER	4865
RCIC-1	UA	PSA-1 SNUBBER	587
RHR-1000N	UA	PSA-3 SNUBBER	3931
RHR-1002N	TP	PSA-3 SNUBBER	4418
RHR-1021N	E	PSA-3 SNUBBER	3930
RHR-20	UA	PSA-1/2 SNUBBER	2488
RHR-214	UA	PSA-1/2 SNUBBER	2104
RHR-256	UA	PSA-35 SNUBBER	10730
RHR-271	N	PSA-3 SNUBBER	3885
RHR-275	UA	PSA-3 SNUBBER	2379
RHR-287	UA	PSA-35 SNUBBER	8690
RHR-359	UA	PSA-3 SNUBBER	2346
RHR-437	N	PSA-3 SNUBBER	226
RHR-463	UA	PSA-3 SNUBBER	2391
RHR-465	S	PSA-3 SNUBBER	2364
RHR-495	BM	PSA-35 SNUBBER	6175
RHR-60	UA	PSA-3 SNUBBER	2369
RHR-942N	N	PSA-1 SNUBBER	371
RHR-SA-32	W	PSA-10 SNUBBER	9937
RRC-SB-5	UA	PSA-100 SNUBBER	616
RWCU-1C-3	W	PSA-3 SNUBBER	3938
SW-29	NW	PSA-10 SNUBBER	4859
		PSI Tests	
MS-1002N	N	PSA-10 SNUBBER	9859
MS-1010N	E	PSA-10	7110
MS-167	BM	PSA-10 SNUBBER	10866
MS-167	TP	PSA-10 SNUBBER	9799
MS-48	UA	PSA-3 SNUBBER	9888
MS-999N	UA	PSA-10 SNUBBER	9564
MSRV-1D-3	UA	PSA-10 SNUBBER	9614

NIS-1 FORM Continued

1. Owner Energy Northwest, Columbia Generating Station, North Power Plant Loop, Richland, WA 99352
2. Plant Columbia Generating Station, North Power Plant Loop, Richland, WA 99352
3. Plant Unit: NA 4. Owner Certificate of Authorization (if required) NA
5. Commercial Service Date 12/13/1984 6. National Board Number for Unit CBIN-8

ATTACHMENT 1

Snubbers Tested During Refuel R19

Snubber Mark Number	Position (1)	Description	Serial No.
MSRV-2A-2	UA	PSA-10 SNUBBER	8824
MSRV-2D-2	UA	PSA-10 SNUBBER	9421
MSRV-3C-2	UA	PSA-10 SNUBBER	7108
RHR-SA-32	W	PSA-10 SNUBBER	8786
RHR-SA-52	UA	PSA-10 SNUBBER	13375
MD-1285-14C	UA	PSA-3 SNUBBER	10661

Notes to snubber functional testing
(1) KEY

BM	Bottom	NE	Northeast	SE	Southeast	UA	Single snubber
E	East	NW	Northwest	S	South	W	West
N	North	SW	Southwest	TP	Top		

Approximately 30% (273 examinations) of the examinations required by Program B Tables IWB/IWC 2412-1 has been completed.

The following Code Cases were implemented: N-460; N-552; N-613-1; N-663, N-685, N-695, N-700, and N-702.

The following table presents a summary of the Code Class 1 and 2 pressure retaining components and their supports that were examined or tested during this reporting period.

Identification No	Description	Diagram No	Pg	Exam or Test Type	Report No.	Date	Results (1)	PSI (2)
Exam Category B-D Item Number B1.90 Code Class 1								
N1-0	RRC NZ-V @ 0	RPV-101		VOL	R-R19-042	5/23/09	A(4,7)	
N2-30	RRC NZ-V @ 30	RPV-101		VOL	R-R19-044	5/22/09	A(4,7)	
N2-60	RRC NZ-V @ 60	RPV-101		VOL	R-R19-046	5/21/09	A(4,7)	
N4-30	FW NZ-V @ 30	RPV-101		VOL	R-R19-048	5/21/09	A(4,7)	
N4-90	FW NZ-V @ 90	RPV-101		VOL	R-R19-051	5/21/09	A(4,7)	
Exam Category B-D Item Number B1.100 Code Class 1								
N1-0-IR	RRC NZ-IR @ 0	RPV-101		VOL	R-R19-043	5/23/09	A(4,6)	
N2-30-IR	RRC NZ-IR @ 30	RPV-101		VOL	R-R19-045	5/22/09	A(4,6)	
N2-60-IR	RRC NZ-IR @ 60	RPV-101		VOL	R-R19-047	5/22/09	A(4,6)	
N4-30-IR	FW NZ-IR @ 30	RPV-101		VOL	R-R19-049	5/20/09	A(4,6)	
N4-90-IR	FW NZ-IR @ 90	RPV-101		VOL	R-R19-052	5/21/09	A(4,6)	
Exam Category B-F Item Number B5.10 Code Class 1								
10LPCS(1)-4	SE TO NOZZLE	LPCS-101	02	VOL	R-R19-023	5/24/09	A(5)	

NIS-1 FORM Continued

1. Owner Energy Northwest, Columbia Generating Station, North Power Plant Loop, Richland, WA 99352
2. Plant Columbia Generating Station, North Power Plant Loop, Richland, WA 99352
3. Plant Unit: NA 4. Owner Certificate of Authorization (if required) NA
5. Commercial Service Date 12/13/1984 6. National Board Number for Unit CBIN-8

ATTACHMENT 1

Identification No	Description	Diagram No	Pg	Exam or Test Type	Report No.	Date	Results (1)	PSI (2)
12RFW(1)AC-13	SE TO N4	RFW-101	05	VOL	R-R19-026	5/22/09	A(5)	
12LPCI(1)B-6	SE TO NOZZLE	RHR-102		VOL	R-R19-034	5/22/09	A(5)	
12RRC(1)-N2A-6	SE TO NOZ	RRC-101	08	VOL	R-R19-035	5/25/09	A(5)	
12RRC(1)-N2B-6	SE TO NOZ	RRC-101	07	VOL	R-R19-036	5/25/09	A(5)	
24RRC(2)B-1	NOZ TO SE	RRC-102	01	VOL	R-R19-039	5/26/09	A(5)	
Exam Category B-G-1								
Item Number B6.10								
Code Class 1								
RPV NUT 36-1-1A	RPV NUT	RPV-101		VT-1	3RPV-002	5/16/09	A	
RPV NUT 36-1-2A	RPV NUT	RPV-101		VT-1	3RPV-002	5/16/09	A	
RPV NUT 36-1-8A	RPV NUT	RPV-101		VT-1	3RPV-002	5/19/09	A	
RPV NUT 36-1-9A	RPV NUT	RPV-101		VT-1	3RPV-002	5/19/09	A	
RPV NUT 36-1-15A	RPV NUT	RPV-101		VT-1	3RPV-002	5/16/09	A	
RPV NUT 36-1-16A	RPV NUT	RPV-101		VT-1	3RPV-002	5/16/09	A	
RPV NUT 36-1-22A	RPV NUT	RPV-101		VT-1	3RPV-002	5/19/09	A	
RPV NUT 36-1-23A	RPV NUT	RPV-101		VT-1	3RPV-002	5/16/09	A	
RPV NUT 36-1-29A	RPV NUT	RPV-101		VT-1	3RPV-002	5/16/09	A	
RPV NUT 36-1-30A	RPV NUT	RPV-101		VT-1	3RPV-002	5/16/09	A	
RPV NUT 36-1-36A	RPV NUT	RPV-101		VT-1	3RPV-002	5/16/09	A	
RPV NUT 36-1-37A	RPV NUT	RPV-101		VT-1	3RPV-002	5/16/09	A	
RPV NUT 36-1-43A	RPV NUT	RPV-101		VT-1	3RPV-002	5/16/09	A	
RPV NUT 36-1-44A	RPV NUT	RPV-101		VT-1	3RPV-002	5/16/09	A	
RPV NUT 36-1-50A	RPV NUT	RPV-101		VT-1	3RPV-002	5/16/09	A	
RPV NUT 36-1-51A	RPV NUT	RPV-101		VT-1	3RPV-002	5/16/09	A	
RPV NUT 36-1-57A	RPV NUT	RPV-101		VT-1	3RPV-002	5/16/09	A	
RPV NUT 36-1-58A	RPV NUT	RPV-101		VT-1	3RPV-002	5/16/09	A	
RPV NUT 36-1-64A	RPV NUT	RPV-101		VT-1	3RPV-002	5/16/09	A	
RPV NUT 36-1-65A	RPV NUT	RPV-101		VT-1	3RPV-002	5/16/09	A	
RPV NUT 36-1-71A	RPV NUT	RPV-101		VT-1	3RPV-002	5/16/09	A	
RPV NUT 36-1-72A	RPV NUT	RPV-101		VT-1	3RPV-002	5/16/09	A	
Exam Category B-G-1								
Item Number B6.20								
Code Class 1								
RPV STUD 35-1-1A	RPV STUD	RPV-101		VOL	R-R19-040	5/10/09	A	
RPV STUD 35-1-2A	RPV STUD	RPV-101		VOL	R-R19-040	5/10/09	A	
RPV STUD 35-1-8A	RPV STUD	RPV-101		VOL	R-R19-040	5/10/09	A	
RPV STUD 35-1-9A	RPV STUD	RPV-101		VOL	R-R19-040	5/10/09	A	
RPV STUD 35-1-15A	RPV STUD	RPV-101		VOL	R-R19-040	5/10/09	A	
RPV STUD 35-1-16A	RPV STUD	RPV-101		VOL	R-R19-040	5/10/09	A	
RPV STUD 35-1-22A	RPV STUD	RPV-101		VOL	R-R19-040	5/10/09	A	
RPV STUD 35-1-23A	RPV STUD	RPV-101		VOL	R-R19-040	5/10/09	A	
RPV STUD 35-1-29A	RPV STUD	RPV-101		VOL	R-R19-040	5/10/09	A	
RPV STUD 35-1-30A	RPV STUD	RPV-101		VOL	R-R19-040	5/10/09	A	
RPV STUD 35-1-36A	RPV STUD	RPV-101		VOL	R-R19-040	5/10/09	A	
RPV STUD 35-1-37A	RPV STUD	RPV-101		VOL	R-R19-040	5/10/09	A	
RPV STUD 35-1-43A	RPV STUD	RPV-101		VOL	R-R19-040	5/10/09	A	

NIS-1 FORM Continued

1. Owner Energy Northwest, Columbia Generating Station, North Power Plant Loop, Richland, WA 99352
2. Plant Columbia Generating Station, North Power Plant Loop, Richland, WA 99352
3. Plant Unit: NA 4. Owner Certificate of Authorization (if required) NA
5. Commercial Service Date 12/13/1984 6. National Board Number for Unit CBIN-8

ATTACHMENT 1

Identification No	Description	Diagram No	Pg	Exam or Test Type	Report No.	Date	Results (1)	PSI (2)
RPV STUD 35-1-44A	RPV STUD	RPV-101		VOL	R-R19-040	5/10/09	A	
RPV STUD 35-1-50A	RPV STUD	RPV-101		VOL	R-R19-040	5/10/09	A	
RPV STUD 35-1-51A	RPV STUD	RPV-101		VOL	R-R19-040	5/10/09	A	
RPV STUD 35-1-57A	RPV STUD	RPV-101		VOL	R-R19-040	5/10/09	A	
RPV STUD 35-1-58A	RPV STUD	RPV-101		VOL	R-R19-040	5/10/09	A	
RPV STUD 35-1-64A	RPV STUD	RPV-101		VOL	R-R19-040	5/10/09	A	
RPV STUD 35-1-65A	RPV STUD	RPV-101		VOL	R-R19-040	5/10/09	A	
RPV STUD 35-1-71A	RPV STUD	RPV-101		VOL	R-R19-040	5/10/09	A	
RPV STUD 35-1-72A	RPV STUD	RPV-101		VOL	R-R19-040	5/10/09	A	
Exam Category B-G-1 Item Number B6.50 Code Class 1								
RPV WASHER 35-1-1A	RPV WASHER	RPV-101		VT-1	3RPV-003	5/16/09	A	
RPV WASHER 35-1-2A	RPV WASHER	RPV-101		VT-1	3RPV-003	5/16/09	A	
RPV WASHER 35-1-8A	RPV WASHER	RPV-101		VT-1	3RPV-003	5/16/09	A	
RPV WASHER 35-1-9A	RPV WASHER	RPV-101		VT-1	3RPV-003	5/16/09	A	
RPV WASHER 35-1-15A	RPV WASHER	RPV-101		VT-1	3RPV-003	5/16/09	A	
RPV WASHER 35-1-16A	RPV WASHER	RPV-101		VT-1	3RPV-003	5/16/09	A	
RPV WASHER 35-1-22A	RPV WASHER	RPV-101		VT-1	3RPV-003	5/16/09	A	
RPV WASHER 35-1-23A	RPV WASHER	RPV-101		VT-1	3RPV-003	5/16/09	A	
RPV WASHER 35-1-29A	RPV WASHER	RPV-101		VT-1	3RPV-003	5/16/09	A	
RPV WASHER 35-1-30A	RPV WASHER	RPV-101		VT-1	3RPV-003	5/16/09	A	
RPV WASHER 35-1-36A	RPV WASHER	RPV-101		VT-1	3RPV-003	5/16/09	A	
RPV WASHER 35-1-37A	RPV WASHER	RPV-101		VT-1	3RPV-003	5/16/09	A	
RPV WASHER 35-1-43A	RPV WASHER	RPV-101		VT-1	3RPV-003	5/19/09	A	
RPV WASHER 35-1-44A	RPV WASHER	RPV-101		VT-1	3RPV-003	5/16/09	A	
RPV WASHER 35-1-50A	RPV WASHER	RPV-101		VT-1	3RPV-003	5/19/09	A	
RPV WASHER 35-1-51A	RPV WASHER	RPV-101		VT-1	3RPV-003	5/16/09	A	
RPV WASHER 35-1-57A	RPV WASHER	RPV-101		VT-1	3RPV-003	5/16/09	A	
RPV WASHER 35-1-58A	RPV WASHER	RPV-101		VT-1	3RPV-003	5/16/09	A	
RPV WASHER 35-1-64A	RPV WASHER	RPV-101		VT-1	3RPV-003	5/16/09	A	
RPV WASHER 35-1-65A	RPV WASHER	RPV-101		VT-1	3RPV-003	5/16/09	A	
RPV WASHER 35-1-71A	RPV WASHER	RPV-101		VT-1	3RPV-003	5/16/09	A	
RPV WASHER 35-1-72A	RPV WASHER	RPV-101		VT-1	3RPV-003	5/16/09	A	
Exam Category B-G-2 Item Number B7.70 Code Class 1								
MS-RV-3A-BLT	VALVE BOLTING	MS-101	01	VT-1	3MSV-025	5/21/09	A	PSI
MS-RV-2A-BLT	VALVE BOLTING	MS-101	01	VT-1	3MSV-020	5/19/09	A	PSI
MS-RV-1C-BLT	VALVE BOLTING	MS-103	01	VT-1	3MSV-015	5/4/09	A	PSI
MS-RV-2C-BLT	VALVE BOLTING	MS-103	01	VT-1	3MSV-015	5/4/09	A	PSI
MS-RV-3C-BLT	VALVE BOLTING	MS-103	01	VT-1	3MSV-026	5/23/09	A	PSI
MS-RV-5C-BLT	VALVE BOLTING	MS-103	01	VT-1	3MSV-015	5/4/09	A	PSI
MS-RV-1D-BLT	VALVE BOLTING	MS-104	01	VT-1	3MSV-018	5/18/09	A	PSI
MS-RV-3D-BLT	VALVE BOLTING	MS-104	01	VT-1	3MSV-019	5/18/09	A	PSI
MS-RV-4D-BLT	VALVE BOLTING	MS-104	01	VT-1	3MSV-015	5/4/09	A	PSI

NIS-1 FORM Continued

Owner Energy Northwest, Columbia Generating Station, North Power Plant Loop, Richland, WA 99352

2. Plant Columbia Generating Station, North Power Plant Loop, Richland, WA 99352

3. Plant Unit: NA 4. Owner Certificate of Authorization (if required) NA

5. Commercial Service Date 12/13/1984 6. National Board Number for Unit CBIN-8

ATTACHMENT 1

Identification No	Description	Diagram No	Pg	Exam or Test Type	Report No.	Date	Results (1)	PSI (2)
MS-V-22D-BLT	VALVE BOLTING	MS-104	02	VT-1	3MSV-023	5/21/09	A	PSI
RHR-V-50A-BLT	VALVE BOLTING	RHR-105		VT-1	3RHV-002	5/21/09	A	
RFW-V-10A-BLT	VALVE BOLTING	RFW-101	01	VT-1	3FWV-006	6/4/09	A	PSI
RFW-V-32A-BLT	VALVE BOLTING	RFW-101	01	VT-1	3FWV-005	6/4/09	A	PSI
RFW-V-32B-BLT	VALVE BOLTING	RFW-102	01	VT-1	3FWV-004	6/4/09	A	PSI
Exam Category B-J								
Item Number B9.11								
Code Class 1								
12HPCS(1)-1	VALVE TO PIPE	HPCS-101	01	VOL	R-R19-005	4/22/09	A(5)	
12HPCS(1)-2	PIPE TO ELL	HPCS-101	01	VOL	R-R19-006	4/22/09	A(5)	
12HPCS(1)-6	ELL TO PIPE	HPCS-101	01	VOL	R-R19-007	5/29/09	A(5)	
12HPCS(1)-7	PIPE TO ELL	HPCS-101	01	VOL	R-R19-008	5/29/09	A(5)	
12HPCS(1)-14	ELL TO PIPE	HPCS-101	01	VOL	R-R19-009	5/29/09	A(5)	
12LPCS(1)-23	PIPE TO ELL	LPCS-101	02	VOL	R-R19-010	5/25/09	A(5)	
10LPCS(1)-2	PIPE TO SE EXT	LPCS-101	02	VOL	R-R19-038	5/25/09	A(5)	
12RFW(1)AC-12	SE STUB TO SE	RFW-101	05	VOL	R-R19-025	5/21/09	A(5)	
12RFW(1)AB-10	SE STUB TO SE	RFW-101	04	VOL	R-R19-028	5/20/09	A(5)	
12RHR(1)A-7	PIPE TO ELL	RHR-105		VOL	R-R19-013	5/22/09	A(5)	
12RHR(1)A-8	ELL TO PIPE	RHR-105		VOL	R-R19-014	5/22/09	A(5)	
12RHR(1)A-9	PIPE TO ELL	RHR-105		VOL	R-R19-015	5/22/09	A(5)	
Exam Category B-J								
Item Number B9.11D (3)								
Code Class 1								
10LPCS(1)-3	SE EXT TO SE	LPCS-101	02	VOL	R-R19-037	5/24/09	A(5)	
12RFW(1)AC-11	SE EX-SE STUB	RFW-101	05	VOL	R-R19-024	5/21/09	A(5)	
12RFW(1)AB-9	SE EXT-SE STUB	RFW-101	04	VOL	R-R19-027	5/20/09	A(5)	
12LPCI(1)B-5	SE EXT TO SE	RHR-102		VOL	R-R19-033	5/23/09	A(5)	
4RRC(4)A-11	SE TO VALVE	RRC-108		VOL	R-R19-021	5/27/09	A(5)	
Exam Category B-J								
Item Number B9.31								
Code Class 1								
24RFW(1)A-1/5RFW(11)-4	PIPE TO WOL	RFW-101	01	VOL	R-R19-012	5/28/09	A(5)	
24RFW(1)B-1/5RFW(11)-4	PIPE TO WOL	RFW-102	01	VOL	R-R19-030	5/28/09	A(5)	
Exam Category B-K								
Item Number B10.20								
Code Class 1								
MS-HC-3(W)	4 WELDED LUGS	MS-103	02	SUR	3MSM-004	5/14/09	A	
RHR-524(W)	8 WELDED LUGS	RHR-103		SUR	3RHM-007	5/26/09	A	
Exam Category B-M-2								
Item Number B12.50								

NIS-1 FORM Continued

1. Owner Energy Northwest, Columbia Generating Station, North Power Plant Loop, Richland, WA 99352
2. Plant Columbia Generating Station, North Power Plant Loop, Richland, WA 99352
3. Plant Unit: NA 4. Owner Certificate of Authorization (if required) NA
5. Commercial Service Date 12/13/1984 6. National Board Number for Unit CBIN-8

ATTACHMENT 1

Identification No	Description	Diagram No	Pg	Exam or Test Type	Report No.	Date	Results (1)	PSI (2)
Code Class 1								
RHR-V-50A-BDY	GROUP P VALVE	RHR-105		VT-3	3RHV-003	5/23/09	A	
RFW-V-32B-BDY	GROUP O VALVE			VT-3	3RFW-007	6/6/09	A	
Exam Category B-N-1								
Item Number B13.10								
Code Class 1								
RPV INTERIOR	RPV INTERIOR	RPV-101		VT-3	147692	5/1/09	A	
Exam Category B-P								
Item Number B15.10								
Code Class 1	Test method was system leakage test IWA-5211(a)							
HPCS-PB-101(L)	Leak. Pres Boundary	HPCS-101		VT-2	0114268906	5/12/2009	A	
LPCS-PB-101(L)	Leak. Pres Boundary	LPCS-101		VT-2	0114268906	5/12/2009	A	
MS-PB-101(L)	Leak. Pres Boundary	MS-101		VT-2	0114268906	5/12/2009	A	
MS-PB-102(L)	Leak. Pres Boundary	MS-102		VT-2	0114268906	5/12/2009	A	
MS-PB-103(L)	Leak. Pres Boundary	MS-103		VT-2	0114268906	5/12/2009	A	
MS-PB-104(L)	Leak. Pres Boundary	MS-104		VT-2	0114268906	5/12/2009	A	
MS-PB-105(L)	Leak. Pres Boundary	MS-105		VT-2	0114268906	5/12/2009	A	
MS-PB-106(L)	Leak. Pres Boundary	MS-106		VT-2	0114268906	5/12/2009	A	
RCIC-PB-101(L)	Leak. Pres Boundary	RCIC-101		VT-2	0114268906	5/12/2009	A	
RCIC-PB-102(L)	Leak. Pres Boundary	RCIC-102		VT-2	0114268906	5/12/2009	A	
RFW-PB-101(L)	Leak. Pres Boundary	RFW-101		VT-2	0114268906	5/12/2009	A	
RFW-PB-102(L)	Leak. Pres Boundary	RFW-102		VT-2	0114268906	5/12/2009	A	
RFW-PB-103(L)	Leak. Pres Boundary	RFW-103		VT-2	0114268906	5/12/2009	A	
RHR-PB-101(L)	Leak. Pres Boundary	RHR-101		VT-2	0114268906	5/12/2009	A	
RHR-PB-102(L)	Leak. Pres Boundary	RHR-102		VT-2	0114268906	5/12/2009	A	
RHR-PB-103(L)	Leak. Pres Boundary	RHR-103		VT-2	0114268906	5/12/2009	A	
RHR-PB-104(L)	Leak. Pres Boundary	RHR-104		VT-2	0114268906	5/12/2009	A	
RHR-PB-105(L)	Leak. Pres Boundary	RHR-105		VT-2	0114268906	5/12/2009	R(a)	
RHR-PB-106(L)	Leak. Pres Boundary	RHR-106		VT-2	0114268906	5/12/2009	A	
RPV-PB-101(L)	Leak. Pres Boundary	RPV-101		VT-2	0114268906	5/12/2009	A	
RPV-PB-102(L)	Leak. Pres Boundary	RPV-102		VT-2	0114268906	5/12/2009	A	
RRC-PB-101(L)	Leak. Pres Boundary	RRC-101		VT-2	0114268906	5/12/2009	R(b)	
RRC-PB-102(L)	Leak. Pres Boundary	RRC-102		VT-2	0114268906	5/12/2009	R(c)	
RRC-PB-103(L)	Leak. Pres Boundary	RRC-103		VT-2	0114268906	5/12/2009	A	
RRC-PB-104(L)	Leak. Pres Boundary	RRC-104		VT-2	0114268906	5/12/2009	A	
RRC-PB-105(L)	Leak. Pres Boundary	RRC-105		VT-2	0114268906	5/12/2009	A	
RRC-PB-106(L)	Leak. Pres Boundary	RRC-106		VT-2	0114268906	5/12/2009	A	
RRC-PB-107(L)	Leak. Pres Boundary	RRC-107		VT-2	0114268906	5/12/2009	A	
RRC-PB-108(L)	Leak. Pres Boundary	RRC-108		VT-2	0114268906	5/12/2009	A	
RRC-PB-109(L)	Leak. Pres Boundary	RRC-109		VT-2	0114268906	5/12/2009	A	
RRC-PB-110(L)	Leak. Pres Boundary	RRC-110		VT-2	0114268906	5/12/2009	A	
RRC-PB-111(L)	Leak. Pres Boundary	RRC-111		VT-2	0114268906	5/12/2009	A	
RWCU-PB-101(L)	Leak. Pres Boundary	RWCU-101		VT-2	0114268906	5/12/2009	A	
SLC-PB-101(L)	Leak. Pres Boundary	SLC-101		VT-2	0114268906	5/12/2009	A	

NIS-1 FORM Continued

1. Owner Energy Northwest, Columbia Generating Station, North Power Plant Loop, Richland, WA 99352
2. Plant Columbia Generating Station, North Power Plant Loop, Richland, WA 99352
3. Plant Unit: NA 4. Owner Certificate of Authorization (if required) NA
5. Commercial Service Date 12/13/1984 6. National Board Number for Unit CBIN-8

ATTACHMENT 1

Identification No	Description	Diagram No	Pg	Exam or Test Type	Report No.	Date	Results (1)	PSI (2)
Exam Category C-A								
Item Number C1.10								
Code Class 2								
AC-1	FLG/SHEL CIRWLD	RHR-214		VOL	R-R19-016	5/16/09	A	
AC-4	SHEL/HD CIR WLD	RHR-214		VOL	R-R19-017	5/15/09	A	
Exam Category C-B								
Item Number C2.21								
Code Class 2								
AN-3	INLET NZ/TOPHD	RHR-214		SUR	3RHM-004	5/14/09	A	
AN-3	INLET NZ/TOPHD	RHR-214		VOL	R-R19-019	5/15/09	A	
AN-4	OUT NZ/SHEL WLD	RHR-214		VOL	R-R19-020	5/16/09	A	
AN-4	OUT NZ/SHEL WLD	RHR-214		SUR	3RHM-005	5/16/09	A	
Exam Category C-C								
Item Number C3.10								
Code Class 2								
AS-1	HEATXCHG SUP WD	RHR-214		SUR	3RHM-006	5/15/09	A	
Exam Category C-F-2								
Item Number C5.51								
Code Class 2								
6RCIC(6)-11	ELL TO PIPE	RCIC-205	03	VOL	R-R19-011	5/14/09	A(5)	
18RHR(1)A-39	PIPE TO ELL	RHR-201	06	VOL	R-R19-002	4/17/09	A(5)	
18RHR(1)A-40	ELL TO PIPE	RHR-201	06	VOL	R-R19-001	4/17/09	A(5)	
Exam Category C-G								
Item Number C6.10								
Code Class 2								
RHR-P-2BC-4	PMP CAS/CIR WLD	RHR-213		SUR	3RHM-002	4/30/09	A	
RHR-P-2BC-5	PMP CAS/CIR WLD	RHR-213		SUR	3RHM-002	4/30/09	A	
RHR-P-2BN-1	PMP NOZZLE WELD	RHR-213		SUR	3RHM-003	4/30/09	A	
RHR-P-2BN-3	PMP NOZZLE WELD	RHR-213		SUR	3RHM-002	4/30/09	A	
Exam Category C-H								
Item Number C7.10								
Code Class 2								
CRD-PB-201(L)	LK PRES BNDRY	CRD-201		VT-2	01141749	6/12/2009	A	
CRD-PB-202(L)	LK PRES BNDRY	CRD-202		VT-2	01141749	6/12/2009	A	
HPCS-PB-201(L)	LK PRES BNDRY	HPCS-201		VT-2	01130780	1/28/08	A	

NIS-1 FORM Continued

1. Owner Energy Northwest, Columbia Generating Station, North Power Plant Loop, Richland, WA 99352
2. Plant Columbia Generating Station, North Power Plant Loop, Richland, WA 99352
3. Plant Unit: NA 4. Owner Certificate of Authorization (if required) NA
5. Commercial Service Date 12/13/1984 6. National Board Number for Unit CBIN-8

ATTACHMENT 1

Identification No	Description	Diagram No	Pg	Exam or Test Type	Report No.	Date	Results (1)	PSI (2)
HPCS-PB-202(L)	LK PRES BNDRY	HPCS-202		VT-2	01130780	1/28/08	A	
LPCS-PB-201(L)	LK PRES BNDRY	LPCS-201		VT-2	01119977	10/30/07	A	
LPCS-PB-202(L)	LK PRES BNDRY	LPCS-202		VT-2	01119977	10/30/07	A	
RCIC-PB-201(L)	LK PRES BNDRY	RCIC-201		VT-2	01139953	5/7/08	A	
RCIC-PB-203(L)	LK PRES BNDRY	RCIC-203		VT-2	01139953	5/7/08	A	
RCIC-PB-204(L)	LK PRES BNDRY	RCIC-204		VT-2	01139953	5/7/08	A	
RCIC-PB-205(L)	LK PRES BNDRY	RCIC-205		VT-2	01139953	5/7/08	A	
RHR-PB-201(L)	LK PRES BNDRY	RHR-201		VT-2	01139952	10/31/07	A	
RHR-PB-202(L)	LK PRES BNDRY	RHR-202		VT-2	01139952	10/31/07	A	
RHR-PB-203(L)	LK PRES BNDRY	RHR-203		VT-2	01139952	10/31/07	A	
RHR-PB-204(L)	LK PRES BNDRY	RHR-204	02	VT-2	01139952	10/31/07	A	
RHR-PB-205(L)	LK PRES BNDRY	RHR-205		VT-2	01139952	10/31/07	A	
RHR-PB-205(L)	LK PRES BNDRY	RHR-205		VT-2	01142635	5/27/07	A	
RHR-PB-206(L)	LK PRES BNDRY	RHR-206		VT-2	01139952	10/31/07	A	
RHR-PB-207(L)	LK PRES BNDRY	RHR-207		VT-2	01140676	11/14/07	A	
RHR-PB-208(L)	LK PRES BNDRY	RHR-208	02	VT-2	01140676	11/14/07	A	
RHR-PB-209(L)	LK PRES BNDRY	RHR-209		VT-2	01140676	11/14/07	A	
RHR-PB-210(L)	LK PRES BNDRY	RHR-210		VT-2	01140675	11/12/07	A	
RHR-PB-211(L)	LK PRES BNDRY	RHR-211		VT-2	01140675	11/12/07	A	
SLC-PB-201(L)	LK PRES BNDRY			VT-2	01139812	4/11/08	A	
SLC-PB-201(L)	LK PRES BNDRY			VT-2	01108774	3/12/09	A	
Exam Category E-A Item Number E1.11 Code Class MC								
SHELL-548-270-V	SHELL 270-360	CONT-548	04	VT-1	3COV-24	6/1/09	A	
SHELL-548-270-V	SHELL 270-360	CONT-548	04	VT-1	3COV-25	6/1/09	A	
Exam Category E-A Item Number E1.20 Code Class MC								
CONT VENT SYSTEM	BWR VENT SYSTEM			VT-3	3COV-23	5/16/09	A	
Exam Category E-A Item Number E1.30 Code Class MC								
BTM HD MOIST BARRIER	BTM HD MOIST BAR	CONT-441		VT-3	3COV-26-30	6/1/09	A	
Exam Category F-A Item Number F1.10 Code Class 1								
LPCS-57	BOX	LPCS-101	02	VT-3	3HV-092	5/25/09	A	
MS-SC-3	RIGID STRUT	MS-103	02	VT-3	3HV-080	5/13/09	A	
HPCS-66	SPRING	HPCS-101	01	VT-3	3HV-094	5/26/09	A	
RHR-524	SPRING	RHR-103		VT-3	3HV-091	5/24/09	A	
MS-HC-3	SPRING	MS-103	02	VT-3	3HV-082	5/14/09	A	
RCIC-940N	SPRING	RCIC-102	03	VT-3	3HV-084	5/19/09	A	

NIS-1 FORM Continued

1. Owner Energy Northwest, Columbia Generating Station, North Power Plant Loop, Richland, WA 99352
2. Plant Columbia Generating Station, North Power Plant Loop, Richland, WA 99352
3. Plant Unit: NA 4. Owner Certificate of Authorization (if required) NA
5. Commercial Service Date 12/13/1984 6. National Board Number for Unit CBIN-8

ATTACHMENT 1

Identification No	Description	Diagram No	Pg	Exam or Test Type	Report No.	Date	Results (1)	PSI (2)
RFW-156	SPRING	RFW-101	05	VT-3	3HV-088	5/23/09	A	
RHR-506	SPRING	RHR-105		VT-3	3HV-093	5/26/09	A	
MS-2619-11	PSA-1/4 SNUBBER	MS-106	01	VT-3	3HV-083	5/19/09	A	
RFW-146	PSA-10 SNUBBER	RFW-101	01	VT-3	3HV-087	5/23/09	A	
RHR-282	PSA-35 SNUBBER	RHR-103		VT-3	3HV-090	5/24/09	A	
RHR-287	PSA-35 SNUBBER	RHR-103		VT-3	3HV-089	5/24/09	A	
Exam Category F-A Item Number F1.20 Code Class 2								
FPC-903N	ANCHOR	FPC-201		VT-3	3HV-067	3/23/09	A	
RCIC-14	BOX	RCIC-205	04	VT-3	3HV-072	4/6/09	A	
RHR-68	STRUT	RHR-205	01	VT-3	3HV-076	4/28/09	A	
RHR-918N	STRUT	RHR-207	01	VT-3	3HV-079	4/30/09	A	
MS-1010N	PSA-10	MS-204	02	VT-3	3HV-085	5/21/09	A	
RHR-67	PSA-3 SNUBBER	RHR-205	01	VT-3	3HV-075	4/28/09	A	
RHR-137	PSA-10 SNUBBER	RHR-205	04	VT-3	3HV-073	4/17/09	A	
RHR-121	PSA-10 SNUBBER	RHR-206	01	VT-3	3HV-074	4/17/09	A	
Exam Category F-A Item Number F1.40 Code Class 1 and 2								
RHR-HX-1A(CS)	HX BASE	RHR-214		VT-3	3RHV-001	5/16/09	A	
RRC-HA-2	SPRING	RRC-103		VT-3	3HV-095	5/27/09	A	
RRC-HA-3	SPRING	RRC-103		VT-3	3HV-096	5/27/09	A	

Notes to Section 13 "Abstract of Examinations and Tests"

1. A = Acceptable R = Rejectable
2. PSI = Preservice Inspection
3. "D" was added to item number to identify dissimilar metal welds in this Category.
4. Alternate examination per Code Case N-702, relief request 3ISI-09.
5. Implemented Code Case N-663
6. Implemented Code Case N-613-1.
7. Implemented Code Case N-552

Notes a, b, c, and d are discussed in Sections 14 and 15.

NIS-1 FORM Continued

1. Owner Energy Northwest, Columbia Generating Station, North Power Plant Loop, Richland, WA 99352
2. Plant Columbia Generating Station, North Power Plant Loop, Richland, WA 99352
3. Plant Unit: NA 4. Owner Certificate of Authorization (if required) NA
5. Commercial Service Date 12/13/1984 6. National Board Number for Unit CBIN-8

ATTACHMENT 1

14. Abstract of Results of Examinations and Tests.

Note a. RHR-V-112A leaks at bonnet to body joint

Note b. Leak off connection to RRC-V-23A packing chamber leaks at cracked weld

Note c. RRC-V-67B leaks at bonnet to body joint.

Note d. CRD 50-11 flange to CRD housing joint leaks at 90 dpm.

15. Abstract of Corrective Measures.

Note a. RHR-V-112A joint was retorqued. No leakage after re-inspection.

Note b. Leak off connection to RRC-V-23A packing chamber flaw was removed and line capped. No leakage after re-inspection.

Note c. RRC-V-67B joint was retorqued. No leakage upon re-inspection.

Note d. CRD 50-11 flange to CRD housing joint associated control rod was scrammed. No leakage upon re-inspection.

APPENDIX B

NIS-2 OWNER'S REPORTS

This appendix summarizes ASME Section XI repair or replacement work performed between June 26, 2007 and June 26, 2009. The status of the NIS-2 Owner's Report is stated for each repair and replacement work performed.

APPENDIX B

ASME SECTION XI REPAIR/REPLACEMENT ACTIVITY LISTING FOR COLUMBIA GENERATING STATION REFUELING OUTAGE R19

Work Plan No. / Work Order No.	WORK DESCRIPTION
2-1569	Supplemental NIS-2 For ASME Section XI Plan No 2-1569 For Penetration X-58 (C-X-58)
2-1939	Replaced valve SW-V-113
2-1974	Fabricated spacer rings for valve SW-V-2B
2-1975	Installed spacer rings for valve SW-V-2B
2-2035	Replaced valve SW-V-194
2-2038	Replaced valve RHR-V-622A
2-2049	Replaced valve SW-V-155W
2-2066	Supplemental NIS-2 For ASME Section XI Plan No 2-2066 For Penetration X-97 (C-X-97)
2-2070	Replaced valve CEP-V-800/12
2-2073	Replaced relief valve RCIC-RV-19T
2-2075	Replaced relief valve SLC-RV-29A
2-2076	Replaced relief valve SLC-RV-29B
2-2078	Replaced relief valve CCH-RV-2A
2-2091	Rerouted tubing for CMS-SR-22
2-2092	Rerouted tubing for CMS-SR-21
2-2113	Replaced pump HPCS-P-2
2-2118	Replaced relief valve CCH-RV-2B
2-2127	Replaced valves RHR-V-604 and RHR-V-605
2-2139	Made body to bonnet seal weld for valve RCIC-V-61
2-2142	Made body to bonnet seal weld for valve RCC-V-219
2-2143	Replaced rupture discs for RCIC-RD-1 and RCIC-RD-2
2-2144	Cut and rewelded welds associated with SW-FE-14A
2-2145	Replaced level switch RCIC-LS-N010 (RCIC-LS-10)
2-2147	Modified used spare nozzles for Main Steam Relief Valves (MSRV's)
2-2148	Removed/reinstalled diaphragm for loading nozzle (desiccant) for OG-DY-30A
2-2152	Replaced bolting material for piping to valve SW-V-170B flanged joints
2-2153	Replaced wedge for valve RCIC-V-74
2-2154	Fabricated orifice plate for HPCS-RO-9
2-2157	Replaced casing for pump RHR-P-3
2-2158	Replaced relief valve CCH-RV-2A
2-2159	Replaced relief valve SW-RV-1A
2-2160	Replaced relief valve SW-RV-1B
2-2161	Replaced parts for valve SLC-V-4A
2-2162	Weld contoured RPV nozzle safe end weld for ultrasonic (UT) examination
2-2168	Replaced studs for split casing for pump FPC-P-1A
2-2169	Replaced parts for valve SLC-V-4B
2-2171	Removed/reinstalled hanger RRC-1549-61
2-2172	Made body to bonnet seal weld for valve RHR-V-84A
2-2181	Fabricated vent line for RFW-V-32A (Valves RFW-V-76 and RFW-V-77)
2-2183	Fabricated vent line for RFW-V-32B (Valves RFW-V-78 and RFW-V-79)
2-2185	Modified support MD-1285-14C
2-2186	Made body to bonnet seal weld for valve RHR-V-85A
2-2190	Replaced studs and nuts RCC supply piping to RRC-P-1B
2-2191	Replaced studs and nuts RCC return piping to RRC-P-1B
2-2192	Replaced parts for valve RCIC-V-22
2-2195	Replaced studs and nuts associated with pump FPC-P-1B
2-2196	Assembled pilot disc (stem disc) main disc (piston disc) for valve MS-V-22D
2-2197	Installed pilot disc (stem disc) main disc (piston disc) for valve MS-V-22D
2-2210	Replaced studs and nuts for RCIC RPV head nozzle N-7
2-2212	Machined body seat ring surfaces for valve HPCS-V-10
2-2213	Drilled dowel pin holes into the internal valve body for valve RHR-V-50A
2-2214	Machined internal body seating surfaces for valve MS-V-22D
2-2216	Replaced existing outlet bolts for MS-RV-2D (Serial No. N63790-03-0054)
2-2221	Replaced RCC supply and return piping flange bolting material for CRA-CC-1C
2-2222	Machined RHR-P-2B Gland Plate Assembly

APPENDIX B

ASME SECTION XI REPAIR/REPLACEMENT ACTIVITY LISTING FOR COLUMBIA GENERATING STATION REFUELING OUTAGE R19

Work Plan No. / Work Order No.	WORK DESCRIPTION
2-2224	Replaced studs and nuts for hinge pin cover for valve RFW-V-10A
2-2225	Refurbished MSRV S/N N63790-03-0046
2-2226	Refurbished MSRV S/N N63790-03-0047
2-2227	Refurbished MSRV S/N N63790-03-0049
2-2228	Refurbished MSRV S/N N63790-03-0053
2-2229	Refurbished MSRV S/N N63790-03-0059
2-2230	Refurbished MSRV S/N N63790-03-0062
2-2231	Refurbished MSRV S/N N63790-03-0137
2-2232	Replaced existing relief valve MS-RV-1C with spare S/N N63790-03-0046
2-2233	Replaced existing relief valve MS-RV-2C with spare S/N N63790-03-0047
2-2234	Replaced existing relief valve MS-RV-3C with spare S/N N63790-03-0053
2-2235	Replaced existing relief valve MS-RV-5C with spare S/N N63790-03-0059
2-2236	Replaced existing relief valve MS-RV-1D with spare S/N N63790-03-0049
2-2237	Replaced existing relief valve MS-RV-3D with spare S/N N63790-03-0137
2-2238	Replaced existing relief valve MS-RV-4D with spare S/N N63790-03-0062
2-2239	Replaced fasteners for existing relief valve MS-RV-2A
2-2240	Replaced fasteners for existing relief valve MS-RV-3A
2-2241	Performed valve work on RHR-V-209
2-2241	Performed piping work associated with valve RHR-V-209
2-2242	Refurbished relief valve S/N N60597-00-0001 (RHR-RV-1A)
2-2244	Replaced RCC cooling water lines to motor for pump RRC-P-1B
2-2245	Replaced rupture disc for CCH-RD-1A
2-2246	Replaced body to bonnet studs and nuts for valve RHR-V-50A
2-2247	Replaced valve RCIC-V-54
2-2256	Tack welded disc nut to disc for valve HPCS-V-10
2-2260	Replaced disc and gasket retaining ring for valve MS-V-20
2-2261	Installed new modification kit for valve RFW-V-32A
2-2262	Capped air actuator line to valve RFW-V-32A
2-2263	Installed new modification kit for valve RFW-V-32B
2-2264	Capped air actuator line to valve RFW-V-32B
2-2270	Repaired outlet flange bolt hole with Heli-Coil for MS-RV-1C, S/N N63790-03-0046
2-2271	Repaired hole for valve RHR-V-50A bonnet
2-2272	Replaced studs and nuts for piping associated with MS-CU-2 shown on Dwg D-220-1.2-X-72a
2-2273	Replaced flex hose flange studs and nuts for CIA-FLX-1V
2-2274	Removed existing capped leak-off piping for valve RRC-V-23A
2-2275	Replaced valve MS-V-728A
2-2276	Installed plug downstream of CIA-V-754 for MS-TK-4J
01142084 01	Replaced snubber for support RHR-SA-32(W)
01142084 01	Replaced snubber for support RHR-SA-52
01142084 01	Replaced snubber for support MSRV-2D-2
01142084 01	Replaced snubber for support MSRV-1D-3
01142084 01	Replaced snubber for support MSRV-3C-2
01142084 01	Replaced snubber for support MSRV-2A-2
01142084 01	Replaced snubber for support MS-167(B)
01142084 01	Replaced snubber for support MS-1002N(N)
01142084 01	Replaced snubber for support MS-1010N(E)
01142084 01	Replaced snubber for support MS-48
01142084 01	Replaced snubber for support MS-167(T)
01142084 01	Replaced snubber for support MS-999N
01145341 01	Overhauled Control Rod Drive (CRD) Serial No 6447
01145341 12	Overhauled Control Rod Drive (CRD) Serial No 7585A
01145341 13	Overhauled Control Rod Drive (CRD) Serial No 7091
01145341 14	Overhauled Control Rod Drive (CRD) Serial No A8748
01145341 22	Overhauled Control Rod Drive (CRD) Serial No A8926
01145341 25	Overhauled Control Rod Drive (CRD) Serial No 7388
01145341 26	Overhauled Control Rod Drive (CRD) Serial No 5393
01145341 29	Overhauled Control Rod Drive (CRD) Serial No 6309

APPENDIX B

ASME SECTION XI REPAIR/REPLACEMENT ACTIVITY LISTING FOR COLUMBIA GENERATING STATION REFUELING OUTAGE R19

Work Plan No. / Work Order No.	WORK DESCRIPTION
01145341 31	Overhauled Control Rod Drive (CRD Serial No A8652
01145341 32	Overhauled Control Rod Drive (CRD) Serial No 5485
01145341 33	Overhauled Control Rod Drive (CRD) Serial No 6246
01145341 34	Overhauled Control Rod Drive (CRD) Serial No 7155
01145341 35	Overhauled Control Rod Drive (CRD) Serial No 6651
01145341 37	Overhauled Control Rod Drive (CRD) Serial No A8548
01145341 38	Overhauled Control Rod Drive (CRD) Serial No A8727
01142671 06	Replaced Control Rod Drive (CRD) at Core Location 18-19
01142671-08	Replaced Control Rod Drive (CRD) at Core Location 18-51
01142671-09	Replaced Control Rod Drive (CRD) at Core Location 18-59
01142671-10	Replaced Control Rod Drive (CRD) at Core Location 22-39
01142671-11	Replaced Control Rod Drive (CRD) at Core Location 22-43
01142671-12	Replaced Control Rod Drive (CRD) at Core Location 22-59
01142671-13	Replaced Control Rod Drive (CRD) at Core Location 26-03
01142671-14	Replaced Control Rod Drive (CRD) at Core Location 26-27
01142671-15	Replaced Control Rod Drive (CRD) at Core Location 06-19
01142671-16	Replaced Control Rod Drive (CRD) at Core Location 06-35
01142671-19	Replaced Control Rod Drive (CRD) at Core Location 10-47
01142671-43	Replaced Control Rod Drive (CRD) at Core Location 14-15
01142671-44	Replaced Control Rod Drive (CRD) at Core Location 14-23
01142671-45	Replaced Control Rod Drive (CRD) at Core Location 34-07
01142671-46	Replaced Control Rod Drive (CRD) at Core Location 34-15
01142671-47	Replaced Control Rod Drive (CRD) at Core Location 34-39
01142671-48	Replaced Control Rod Drive (CRD) at Core Location 38-07
01142671-49	Replaced Control Rod Drive (CRD) at Core Location 38-15
01142671-50	Replaced Control Rod Drive (CRD) at Core Location 38-39
01142671-51	Replaced Control Rod Drive (CRD) at Core Location 38-51
01142671-52	Replaced Control Rod Drive (CRD) at Core Location 38-59
01142671-53	Replaced Control Rod Drive (CRD) at Core Location 42-43
01142671-54	Replaced Control Rod Drive (CRD) at Core Location 46-43
01142671-55	Replaced Control Rod Drive (CRD) at Core Location 50-11
01142671-56	Replaced Control Rod Drive (CRD) at Core Location 54-15

PLAN No 2-1569

ENERGY NORTHWEST
People · Vision · Solutions

FORM NIS-2 OWNER'S REPORT FOR REPAIR/REPLACEMENT ACTIVITY
As Required By The Provisions Of The ASME Code Section XI

Date: 06/20/2009
Sheet: 1 Of 1
Unit: Not Applicable

1. **Owner:** Energy Northwest
   Address: Columbia Generating Station, North Power Plant Loop, Richland, Washington, 99352
2. **Plant:** Columbia Generating Station
   Address: Columbia Generating Station, North Power Plant Loop, Richland, Washington, 99352
3. **(a) Work Performed By:** Energy Northwest
   (b) Repair/Replacement Organization P.O. No, Job No, etc.: Energy Northwest
   (c) Type Code Symbol Stamp: Not Applicable
   (d) Certificate Of Authorization No.: Not Applicable
   (e) Expiration Date: Not Applicable
4. **Identification Of System:** Containment
5. **(a) Applicable Construction Code:** ASME Section III, Code Class MC, 1971 Edition with Summer 1972 Addenda, Code Case: Note 1
   (b) Applicable Edition Of ASME Section XI Used For Repair/Replacement Activity: 2001 Edition with 2003 Addenda
   (c) Applicable ASME Section XI Case(s): None
6. **Identification Of Components**

Name Of Component	Name Of Manufacturer	Manufacturer's Serial No	National Board No	Other I.D.	Year Built	Corrected, Removed Or Installed	ASME Code Stamped (Yes Or No) Code Class
Containment	PDM	12764	790	N/A	1976	See Item 7 Below	Yes, Code Class MC

7. **Description Of Work Performed:** The purpose of this NIS-2 form is to supplement the NIS-2 form originally issued for ASME Section XI Plan No 2-1569. The final visual examination on containment penetration X-58 repair performed under ASME Section XI repair plan 2-1569 during R13 in 1998 was deferred. The examination is required by ASME Section XI to be performed during the ILRT. Since an ILRT was not performed in 1998 ASME Section XI allows the examination to be performed at the next scheduled ILRT. The next scheduled ILRT is during R19.

In view of the above, performed detailed visual examination in conjunction with 10CFR50, Appendix J test of the repair/replacement areas (local areas affected by repair/replacement activity only). The detailed visual examination in accordance with SPS-7-4 for "Visual Examination Of Containment" is a verification of the structural integrity of the repair/replacement area (local areas affected by repair/replacement activity only) during Appendix J test. The visual examination results are documented in Report No 3COV-31. The visual examination results were determined to be acceptable.

PLAN No 2-1569

ENERGY NORTHWEST
People · Vision · Solutions

FORM NIS-2 OWNER'S REPORT FOR REPAIR/REPLACEMENT ACTIVITY (Back)

8 Tests Conducted: Hydrostatic ☐ **Pneumatic** ☐ **Nominal Operating Pressure** ☐ **Other** ☐
Exempt ☐ **Test Pressure:** Psig **Test Temperature:** °F

9. Remarks (Applicable Manufacturer's Data Reports to be attached): 1) * See Item 7 Description Of Work Performed.

CERTIFICATE OF COMPLIANCE

I certify that the statements made in this Owner's Report are correct and that this conforms to the requirements of the ASME Code, Section XI.
Type Code Symbol Stamp: Not Applicable
Certificate Of Authorization No.: Not Applicable
Expiration Date: Not Applicable

Prepared By Kuldip Singh - Program Lead Engineer (PLE) ***Signed By*** Kuldip Singh - Program Lead Engineer (PLE)

Date 6/20/09 ***Date*** 6/20/09.

CERTIFICATE OF INSERVICE INSPECTION

I, the undersigned, holding a valid commission issued by the National Board of Boiler and Pressure Vessel Inspectors and the State of Washington ***and employed by*** Hartford Steam Boiler Of Connecticut of Hartford, Connecticut ***have inspected the components described in this Owner's Report during the period*** 6/15/2009 ***to*** 6/24/2009 ***and state to the best of my knowledge and belief, the Owner has performed examinations and taken corrective measures described in this Owner's Report in accordance with the requirements of the ASME Code, Section XI.***
By signing this certificate neither the Inspector nor his employer makes any warranty, expressed or implied, concerning the examinations and corrective measures described in this Owner's Report. Furthermore, neither the Inspector nor his employer shall be liable in any manner for any personal injury or property damage or a loss of any kind arising from or connected with this inspection.

Inspector's Signature ***Commissions*** 13172 WANI
National Board, State, and Endorsements

Date 6/24/2009

PLAN No 2-1939

ENERGY NORTHWEST
People · Vision · Solutions

FORM NIS-2 OWNER'S REPORT FOR REPAIR/REPLACEMENT ACTIVITY
As Required By The Provisions Of The ASME Code Section XI

1. Owner: Energy Northwest
Address: Columbia Generating Station, North Power Plant Loop, Richland, Washington, 99352
2. Plant: Columbia Generating Station
Address: Columbia Generating Station, North Power Plant Loop, Richland, Washington, 99352

Date: 06/21/2009
Sheet: 1 Of 1
Unit: Not Applicable

3. (a) Work Performed By: Energy Northwest
(b) Repair/Replacement Organization P.O. No, Job No, etc.: Energy Northwest
(c) Type Code Symbol Stamp: Not Applicable
(d) Certificate Of Authorization No.: Not Applicable
(e) Expiration Date: Not Applicable
4. Identification Of System: Service Water (SW) System
5. (a) Applicable Construction Code: ASME Section III, Code Class 3, 1971 Edition with Winter 1973 Addenda, Code Case: Note 1
(b) Applicable Edition Of ASME Section XI Used For Repair/Replacement Activity: 2001 Edition with 2003 Addenda
(c) Applicable ASME Section XI Case(s): None
6. Identification Of Components

Name Of Component	Name Of Manufacturer	Manufacturer's Serial No	National Board No	Other I.D.	Year Built	Corrected, Removed Or Installed	ASME Code Stamped (Yes Or No) Code Class
SW(22)-2	WPPSS*	SW(22)-2-P1	N/A	N/A	1983	See Item 7 Below	Yes, Code Class 3
SW-V-113	Borg Warner	14009	N/A	N/A	1976	Removed	Yes, Code Class 1
SW-V-133	Borg Warner	13989	N/A	N/A	1976	Installed	Yes, Code Class 1

7. Description Of Work Performed: Replaced existing valve SW-V-113. The replacement work was performed as follows:
1) Removed existing valve SW-V-113, Serial No 14009.
2) Installed replacement valve SW-V-113, Serial No 13989.
3) Made required socket welds.
4) Performed visual examination on the final socket welds. Visual examination results acceptable.
5) Performed VT-2 visual examination during pressure test to confirm pressure boundary integrity of the joints. No evidence of leakage during the pressure test.

NOTES
1) The applicable ASME Code Cases, if any are listed on the ASME Code Data Reports.
2) * Company name changed from Washington Public Power Supply System (WPPSS) to Energy Northwest (EN) in 1999.
3) The existing ASME Code Stamped piping system in which the replacement valve SW-V-113, Serial No 13989 was installed is Service Water (SW) piping system SW(22)-2-P1. This piping system is certified to comply with ASME Section III, Code Class 3, 1971 Edition with Winter 1973 Addenda requirements.
4) The replacement valve SW-V-113, Serial No 13989 is certified to comply with ASME Section III, Code Class 1, 1971 Edition with Winter 1973 Addenda requirements.
5) ASME Section III, Code Class 1 valve for ASME Section III, Code Class 3 application.

PLAN No 2-1939

ENERGY NORTHWEST
People · Vision · Solutions

FORM NIS-2 OWNER'S REPORT FOR REPAIR/REPLACEMENT ACTIVITY (Back)

8 Tests Conducted: Hydrostatic [ ] **Pneumatic** [ ] **Nominal Operating Pressure** [X] **Other** [ ]
Exempt [ ] **Test Pressure:** 206 Psig **Test Temperature:** 74° F

9. Remarks (Applicable Manufacturer's Data Reports to be attached): See attached NPV-1 Code Data Report for the replacement valve SW-V-133, Serial No 13989.

CERTIFICATE OF COMPLIANCE

I certify that the statements made in this Owner's Report are correct and that this conforms to the requirements of the ASME Code, Section XI.
Type Code Symbol Stamp: Not Applicable
Certificate Of Authorization No.: Not Applicable
Expiration Date: Not Applicable

Prepared By Kuldip Singh - Program Lead Engineer (PLE) ***Signed By*** Kuldip Singh - Program Lead Engineer (PLE)

Date 6/21/09 ***Date*** 6/21/09

CERTIFICATE OF INSERVICE INSPECTION

I, the undersigned, holding a valid commission issued by the National Board of Boiler and Pressure Vessel Inspectors and the State of Washington ***and employed by*** Hartford Steam Boiler Of Connecticut of Hartford, Connecticut ***have inspected the components described in this Owner's Report during the period*** 7/8/2008 ***to*** 6/24/2009 ***and state to the best of my knowledge and belief, the Owner has performed examinations and taken corrective measures described in this Owner's Report in accordance with the requirements of the ASME Code, Section XI.***
By signing this certificate neither the Inspector nor his employer makes any warranty, expressed or implied, concerning the examinations and corrective measures described in this Owner's Report. Furthermore, neither the Inspector nor his employer shall be liable in any manner for any personal injury or property damage or a loss of any kind arising from or connected with this inspection.

Inspector's Signature ***Commissions*** 13172 WANI
National Board, State, and Endorsements

Date 6/24/2009

PLAN NO. 2-1939.

FORM NPV-1 MANUFACTURERS' DATA REPORT FOR NUCLEAR PUMPS OR VALVES*

As Required by the Provisions of the ASME Code Rules

Philip Sims 6/20/09

1. Manufactured by Nuclear Valve Division of Borg Warner, 7500 Tyrone Avenue, Van Nuys, Ca. (Name & Address of Manufacturer) Order No. 44713

2. Manufactured for Bechtel & Crail/G.E.R.I. P.O. Box 1040, Richland, Washington 99352 (Name and Address) Order No. 215-3261

3. Owner WPPSS Hanford #2 Job Site SW-V-113, S/N 13989.

4. Location of Plant Richland, Washington 99352

5. Pump or Valve Identification Nuclear Valve Div., P/N 76630, 2 Inch Y Type Globe Valve, CS

Serial Numbers 13971 thru 13995 (25 valves)
(Brief description of service for which equipment was designed)

(a) Drawing No. 76630 Prepared by Nuclear Valve Division of Borg Warner

(b) National Board No.

6. Design Conditions 3600 (Pressure) psi 100 (Temperature) °F

7. The material, design, construction, and workmanship complies with ASME Code Section III, Class 1

Edition 1971, Addenda Date Winter '73, Case No.

Mark No.	Material Spec. No.	Manufacturer	Remarks
(a) Castings			
Disc - Code 1F17, 1H16,	Stellite #6	Rex Precision	
Casting - 71238	NMS 71043	Metals Tech.	
Machined - 71239		NV Division	
(b) Forgings			
Body - 1K84, 1K85, 1J35	SA - 105	Compton Forge	
Forging - 71224		Pacific Forge	
Machined - 71226-11		NV Division	
Bonnet - Code 1H63, 1G86, 1G21	SA -105		
Forged Stock		Airco Viking	
Machined - 71279-11		NV Division	

REVIEWED 12/10/81 BY REQUIRE QUALITY CONTROL

*Supplemental sheets in form of lists, sketches or drawings may be used provided (1) size is 8½" x 11", (2) information in items 1, 2, ... and 5b on this data report is included on each sheet, and (3) each sheet is numbered and number of sheets is recorded at top of this form.

WBG 215 12187 2

2 1 2 8 0 4 9 8

FORM NPV-1 (back)

0A1060

Mark No.	Material Spec. No.	Manufacturer	Remarks
(c) Bolting			
			REVIEWED BY: [illegible] DATE: [illegible] BECHTEL QUALITY CONTROL BY: [illegible]
(d) Other Parts			
Stem - Code 1K35	SA564TY630		
Bar Stock		Jorgensen Steel	
Machined - 73444		NV Division	

9. Hydrostatic test 3600-3650 psi.

CERTIFICATION OF DESIGN

Design information on file at Nuclear Valve Div. of Borg Warner, 7500 Tyrone Ave., Van Nuys, Ca.

Stress analysis report on file at NVD of Borg Warner, 7500 Tyrone Ave., Van Nuys, CA

Design specifications certified by David J. Murphy (1) Prof. Eng. State Wash. Reg. No. 12542

Stress analysis report certified by Byron Leonard Jr. (1) Prof. Eng. State CA Reg. No. E123

(1) Signature not required. List name only.

We certify that the statements made in this report are correct.

Date Oct. 8 19 76 Signed Nuclear Valve Div. of Borg Warner (Manufacturer) By [signature]

Certificate of Authorization No. N-1254 expires October 27, 1978

CERTIFICATE OF SHOP INSPECTION

I, the undersigned, holding a valid commission issued by the National Board of Boiler and Pressure Vessel Inspectors and/or the State of Province of California and employed by Dept. of Bldg. & Safety of City of Los Angeles have inspected the equipment described in this Data Report on Oct. 8 19 76, and state that to the best of my knowledge and belief, the Manufacturer has constructed this equipment in accordance with the applicable Subsections of ASME Code, Section III.

By signing this certificate, neither the Inspector nor his employer makes any warranty, expressed or implied, concerning the equipment described in this Data Report. Furthermore, neither the Inspector nor his employer shall be liable in any manner for any personal injury or property damage or a loss of any kind arising from or connected with this inspection.

Date October 8 19 76

[signature] (Inspector) Commissions Calif 1010 (National Board, State, Province and No.)

WBG 3A 215 12187

2 1 2 8 0 0 4 9 9

PLAN No 2-1974

ENERGY NORTHWEST
People · Vision · Solutions

FORM NIS-2 OWNER'S REPORT FOR REPAIR/REPLACEMENT ACTIVITY
As Required By The Provisions Of The ASME Code Section XI

1. Owner: Energy Northwest
Address: Columbia Generating Station, North Power Plant Loop, Richland, Washington, 99352
2. Plant: Columbia Generating Station
Address: Columbia Generating Station, North Power Plant Loop, Richland, Washington, 99352

Date: 04/25/2009
Sheet: 1 Of 1
Unit: Not Applicable

3. (a) Work Performed By: Energy Northwest
(b) Repair/Replacement Organization P.O. No, Job No, etc.: Energy Northwest
(c) Type Code Symbol Stamp: Not Applicable
(d) Certificate Of Authorization No.: Not Applicable
(e) Expiration Date: Not Applicable
4. Identification Of System: Service Water (SW) System
5. (a) Applicable Construction Code: ASME Section III, Code Class 3, 1971 Edition with Winter 1973 Addenda, Code Case: Note 1
(b) Applicable Edition Of ASME Section XI Used For Repair/Replacement Activity: 2001 Edition with 2003 Addenda
(c) Applicable ASME Section XI Case(s): None
6. Identification Of Components

Name Of Component	Name Of Manufacturer	Manufacturer's Serial No	National Board No	Other I.D.	Year Built	Corrected, Removed Or Installed	ASME Code Stamped (Yes Or No) Code Class
SW(2)-2-UG	WPPSS*	SW(2)-2-UG-P1	N/A	N/A	1983	See Item 7 Below	Yes, Code Class 3

7. Description Of Work Performed: Fabricated two (2) spacer rings for valve SW-V-2B. The work was performed as follows:
1) Rough cut the plate material for the lugs.
2) Rough cut the plate material for the spacer rings.
3) Fabricated the lugs.
4) Fabricated the spacer rings.
5) Welded the lugs to the spacer rings.
6) Performed visual examination on the final welds. Visual examination results acceptable.
7) Stamped the CVI No on the edge of each spacer rings.

NOTES
1) The applicable ASME Code Cases, if any are listed on the ASME Code Data Reports.
2) * Company name changed from Washington Public Power Supply System (WPPSS) to Energy Northwest (EN) in 1999.
3) If/when the need arises the fabricated replacement spacer rings for valve SW-V-2B will be installed in accordance with ASME Section XI Plan No 2-1975.

PLAN No 2-1974

ENERGY NORTHWEST
People · Vision · Solutions

FORM NIS-2 OWNER'S REPORT FOR REPAIR/REPLACEMENT ACTIVITY (Back)

8 Tests Conducted: Hydrostatic [ ] **Pneumatic** [ ] **Nominal Operating Pressure** [ ] **Other** [ ]
Exempt [X] **Test Pressure:** Psig **Test Temperature:** °F

9. Remarks (Applicable Manufacturer's Data Reports to be attached): None

CERTIFICATE OF COMPLIANCE

I certify that the statements made in this Owner's Report are correct and that this conforms to the requirements of the ASME Code, Section XI.
Type Code Symbol Stamp: Not Applicable
Certificate Of Authorization No.: Not Applicable
Expiration Date: Not Applicable

Prepared By Kuldip Singh - Program Lead Engineer (PLE) ***Signed By*** Kuldip Singh - Program Lead Engineer (PLE)

Date 4/25/09 ***Date*** 4/25/09

CERTIFICATE OF INSERVICE INSPECTION

I, the undersigned, holding a valid commission issued by the National Board of Boiler and Pressure Vessel Inspectors and the State of Washington ***and employed by*** Hartford Steam Boiler Of Connecticut of Hartford, Connecticut ***have inspected the components described in this Owner's Report during the period*** 3/3/2008 ***to*** 5/12/2009 ***and state to the best of my knowledge and belief, the Owner has performed examinations and taken corrective measures described in this Owner's Report in accordance with the requirements of the ASME Code, Section XI.***
By signing this certificate neither the Inspector nor his employer makes any warranty, expressed or implied, concerning the examinations and corrective measures described in this Owner's Report. Furthermore, neither the Inspector nor his employer shall be liable in any manner for any personal injury or property damage or a loss of any kind arising from or connected with this inspection.

Inspector's Signature ***Commissions*** 13172 WANI
National Board, State, and Endorsements

Date 5/12/2009

PLAN No 2-1975

ENERGY NORTHWEST
People·Vision·Solutions

FORM NIS-2 OWNER'S REPORT FOR REPAIR/REPLACEMENT ACTIVITY
As Required By The Provisions Of The ASME Code Section XI

1. Owner: Energy Northwest
Address: Columbia Generating Station, North Power Plant Loop, Richland, Washington, 99352
2. Plant: Columbia Generating Station
Address: Columbia Generating Station, North Power Plant Loop, Richland, Washington, 99352

Date: 06/20/2009
Sheet: 1 Of 1
Unit: Not Applicable

3. (a) Work Performed By: Energy Northwest
(b) Repair/Replacement Organization P.O. No, Job No, etc.: Energy Northwest
(c) Type Code Symbol Stamp: Not Applicable
(d) Certificate Of Authorization No.: Not Applicable
(e) Expiration Date: Not Applicable
4. Identification Of System: Service Water System (SW) System
5. (a) Applicable Construction Code: ASME Section III, Code Class 3, 1971 Edition with Winter 1973 Addenda, Code Case: Note 1
(b) Applicable Edition Of ASME Section XI Used For Repair/Replacement Activity: 2001 Edition with 2003 Addenda
(c) Applicable ASME Section XI Case(s): None
6. Identification Of Components

Name Of Component	Name Of Manufacturer	Manufacturer's Serial No	National Board No	Other I.D.	Year Built	Corrected, Removed Or Installed	ASME Code Stamped (Yes Or No) Code Class
SW(2)-2-UG	WPPSS*	SW(2)-2-UG-P1	N/A	N/A	1983	See Item 7 Below	Yes, Code Class 3

7. Description Of Work Performed: Installed spacer rings for valve SW-V-2B. The replacement work was performed as follows:
1) Removed existing spacer rings.
2) Installed replacement spacer rings.
3) Installed fourteen (14) replacement hex head screws.
4) Reinstalled remaining fasteners.
5) Performed VT-2 visual examination during pressure test to confirm pressure boundary integrity of the joints. No evidence of leakage during the pressure test.

NOTES -
1) The applicable ASME Code Cases, if any are listed on the ASME Code Data Reports.
2) * Company name changed from Washington Public Power Supply System (WPPSS) to Energy Northwest (EN) in 1999.

PLAN No 2-1975

ENERGY NORTHWEST
People · Vision · Solutions

FORM NIS-2 OWNER'S REPORT FOR REPAIR/REPLACEMENT ACTIVITY (Back)

8 Tests Conducted: Hydrostatic [ ] Pneumatic [ ] Nominal Operating Pressure [X] Other [ ]
Exempt [ ] Test Pressure: 206 Psig Test Temperature: 74° F

9. Remarks (Applicable Manufacturer's Data Reports to be attached): None

CERTIFICATE OF COMPLIANCE

I certify that the statements made in this Owner's Report are correct and that this conforms to the requirements of the ASME Code, Section XI.
Type Code Symbol Stamp: Not Applicable
Certificate Of Authorization No.: Not Applicable
Expiration Date: Not Applicable

Prepared By Kuldip Singh — Kuldip Singh - Program Lead Engineer (PLE)
Date 6/21/09

Signed By Kuldip Singh — Kuldip Singh - Program Lead Engineer (PLE)
Date 6/21/09

CERTIFICATE OF INSERVICE INSPECTION

I, the undersigned, holding a valid commission issued by the National Board of Boiler and Pressure Vessel Inspectors and the State of Washington *and employed by* Hartford Steam Boiler Of Connecticut of Hartford, Connecticut *have inspected the components described in this Owner's Report during the period* 3/18/2008 *to* 6/24/2009 *and state to the best of my knowledge and belief, the Owner has performed examinations and taken corrective measures described in this Owner's Report in accordance with the requirements of the ASME Code, Section XI.*
By signing this certificate neither the Inspector nor his employer makes any warranty, expressed or implied, concerning the examinations and corrective measures described in this Owner's Report. Furthermore, neither the Inspector nor his employer shall be liable in any manner for any personal injury or property damage or a loss of any kind arising from or connected with this inspection.

Inspector's Signature

Commissions 13172 WANI
National Board, State, and Endorsements

Date 6/24/2009

PLAN No 2-2035

ENERGY NORTHWEST
People · Vision · Solutions

FORM NIS-2 OWNER'S REPORT FOR REPAIR/REPLACEMENT ACTIVITY
As Required By The Provisions Of The ASME Code Section XI

Date: 10/31/2007
Sheet: 1 Of 1
Unit: Not Applicable

1. **Owner:** Energy Northwest
   Address: Columbia Generating Station, North Power Plant Loop, Richland, Washington, 99352
2. **Plant:** Columbia Generating Station
   Address: Columbia Generating Station, North Power Plant Loop, Richland, Washington, 99352
3. **(a) Work Performed By:** Energy Northwest
   (b) Repair/Replacement Organization P.O. No, Job No, etc.: Energy Northwest
   (c) Type Code Symbol Stamp: Not Applicable
   (d) Certificate Of Authorization No.: Not Applicable
   (e) Expiration Date: Not Applicable
4. **Identification Of System:** Service Water (SW) System
5. **(a) Applicable Construction Code:** ASME Section III, Code Class 3, 1971 Edition with Winter 1973 Addenda, Code Case: Note 1
   (b) Applicable Edition Of ASME Section XI Used For Repair/Replacement Activity: 2001 Edition with 2003 Addenda
   (c) Applicable ASME Section XI Code Case(s): None
6. **Identification Of Components**

Name Of Component	Name Of Manufacturer	Manufacturer's Serial No	National Board No	Other I.D.	Year Built	Corrected, Removed Or Installed	ASME Code Stamped (Yes Or No) Code Class
SW(21)-2	WPPSS*	SW(21)-2-P1	N/A	N/A	1983	See Item 7 Below	Yes, Code Class 3
SW-V-194	Anderson	6620	N/A	N/A	1975	Removed	Yes, Code Class 3
SW-V-194	Dragon	GT 1310	N/A	N/A	1978	Installed	Yes, Code Class 2

7. **Description Of Work:** Replaced existing valve SW-V-194. The replacement work was performed as follows:
   1) Removed existing valve SW-V-194, Serial No 6620.
   2) Installed replacement piping nipple.
   3) Installed replacement valve SW-V-194, Serial No GT1310.

NOTES

1) The applicable ASME Code Cases, if any are listed on the ASME Code Data Reports.
2) * Company name changed from Washington Public Power Supply System (WPPSS) to Energy Northwest (EN) in 1999.
3) The existing ASME Code Stamped piping system in which the replacement valve SW-V-194, Serial No GT1310 was installed is Service Water (SW) piping system SW(21)-2-P1. This piping system is certified to comply with ASME Section III, Code Class 3, 1971 Edition with Winter 1973 Addenda requirements.
4) The replacement valve SW-V-194, Serial No GT1310 is certified to comply with ASME Section III, Code Class 2, 1974 Edition with Summer 1976 (06/30/76) Addenda requirements.
5) ASME Section III, Code Class 2 valve for ASME Section III, Code Class 3 application.

PLAN No 2-2035

ENERGY NORTHWEST
People · Vision · Solutions

FORM NIS-2 OWNER'S REPORT FOR REPAIR/REPLACEMENT ACTIVITY (Back)

8 Tests Conducted: Hydrostatic [ ] **Pneumatic** [ ] **Nominal Operating Pressure** [ ] **Other** [ ]
Exempt [X] **Test Pressure:** Psig **Test Temperature:** °F

9. Remarks (Applicable Manufacturer's Data Reports to be attached): See attached NPV-1 Code Data Report for the replacement valve SW-V-194, Serial No GT1310.

CERTIFICATE OF COMPLIANCE

I certify that the statements made in this Owner's Report are correct and that this conforms to the requirements of the ASME Code, Section XI.
Type Code Symbol Stamp: Not Applicable
Certificate Of Authorization No.: Not Applicable
Expiration Date: Not Applicable

Prepared By Kuldip Singh **Signed By** Kuldip Singh
Kuldip Singh - Program Lead Engineer (PLE) Kuldip Singh - Program Lead Engineer (PLE)
Date 10/31/07 **Date** 10/31/07

CERTIFICATE OF INSERVICE INSPECTION

I, the undersigned, holding a valid commission issued by the National Board of Boiler and Pressure Vessel Inspectors and the State of _____ and employed by _____ of _____ have inspected the components described in this Owner's Report during the period _____ to _____ and state to the best of my knowledge and belief, the Owner has performed examinations and taken corrective measures described in this Owner's Report in accordance with the requirements of the ASME Code, Section XI.
By signing this certificate neither the Inspector nor his employer makes any warranty, expressed or implied, concerning the examinations and corrective measures described in this Owner's Report. Furthermore, neither the Inspector nor his employer shall be liable in any manner for any personal injury or property damage or a loss of any kind arising from or connected with this inspection.

Not Required - Repair/Replacement 1" NPS And Smaller **Commissions** _____
Inspector's Signature National Board, State, and Endorsements

Date _____

PLAN No. 2-2035

Philip Smith

FORM NPV-1 MANUFACTURERS' DATA REPORT FOR NUCLEAR PUMPS OR VALVES*

As Required by the Provisions of the ASME Code Rules

1. Manufactured by DRAGON VALVES, INC. • 13457 Excelsior Drive • Norwalk, CA. 90650 Order No. N17709R SUPPL. #5
(Name & Address of Manufacturer)

2. Manufactured for WSH/BOECON/GERI, Richland, Washington 99352 Order No. 215-15410
(Name and Address)

3. Owner Washington Public Power Supply System, Hanford Jobsite No. 2

4. Location of Plant Richland, Washington SW-V-194, S/N GT1310

5. Pump or Valve Identification Serial Numbers GT1291 thru GT1315 (25 Pcs.) ✓

1/2 Inch FNPT Instrument Globe Valves. Part Number 500FN057D1.
(Brief description of service for which equipment was designed)

(a) Drawing No. 12997 Prepared by Dragon Valves, Inc.

(b) National Board No. ——

6. Design Conditions 3600 (Pressure) psi 100 (Temperature) °F or Pressure Class _____ (1)

7. The material, design, construction, and workmanship complies with ASME Code Section III. Class 2

Edition 1974, Addenda Date 6-30-76, Case No. _____

	Mark No.	Material Spec. No.	Manufacturer	Remarks
(a) Castings	None			
(b) Forgings				
Body	HT 76285	SA182 Gr. F316	Ajax Forge Co.	

(1) For manually operated valves only

*Supplemental sheets in form of lists, sketches or drawings may be used provided (1) size is 8½" x 11", (2) information in Items 1, 2, 5a and 5b on this data report is included on each sheet, and (3) each sheet is numbered and number of sheets is recorded at top of this form.

4

FORM NPV-1 (back) WEO DR 215-14029

	Mark No.	Material Spec. No.	Manufacturer	Remarks
(c) Bolting	None			
(d) Other Parts				
Bonnet	HT 8643313	SA479 TY 316	Republic Steel Corp.	
Disc	HT 1810-3-1062	Stellite No. 6	Cabot Corp. Stellite Div.	
Union Nut	HT 11684	SA479 TY 316	Carpenter Technology Corp.	

8. Hydrostatic test 5400 psi.

CERTIFICATION OF DESIGN

Design information on file at WSH/BOECON/GERI

Stress analysis report on file at not applicable

Design specifications certified by David J. Murphy (1) Prof. Eng. State WA Reg. No. 12542

Stress analysis report certified by not required (1) Prof. Eng. State _____ Reg. No. _____

(1) Signature not required. List name only.

We certify that the statements made in this report are correct.

Date December 11, 19 78 Signed DRAGON VALVES, INC. (Manufacturer) By [signature]

Certificate of Authorization No. N-1033 expires May 6, 1981

CERTIFICATE OF SHOP INSPECTION

I, the undersigned, holding a valid commission issued by the National Board of Boiler and Pressure Vessel Inspectors and/or the State of Province of CALIFORNIA and employed by Division of Industrial Safety of CALIFORNIA have inspected the equipment described in this Data Report on 12-11 19 78, and state that to the best of my knowledge and belief, the Manufacturer has constructed this equipment in accordance with the applicable Subsections of ASME Code, Section III.

By signing this certificate, neither the Inspector nor his employer makes any warranty, expressed or implied, concerning the equipment described in this Data Report. Furthermore, neither the Inspector nor his employer shall be liable in any manner for any personal injury or property damage or a loss of any kind arising from or connected with this inspection.

Date 12-11 19 78

[signature] (Inspector) Commissions Cal. 857 (National Board, State, Province and No.)

Printed in U.S.A.

INFORMATION

PLAN No 2-2038

ENERGY NORTHWEST
People·Vision·Solutions

FORM NIS-2 OWNER'S REPORT FOR REPAIR/REPLACEMENT ACTIVITY
As Required By The Provisions Of The ASME Code Section XI

1. Owner: Energy Northwest
Address: Columbia Generating Station, North Power Plant Loop, Richland, Washington, 99352
2. Plant: Columbia Generating Station
Address: Columbia Generating Station, North Power Plant Loop, Richland, Washington, 99352

Date: 06/21/2009
Sheet: 1 Of 1
Unit: Not Applicable

3. (a) Work Performed By: Energy Northwest
(b) Repair/Replacement Organization P.O. No, Job No, etc.: Energy Northwest
(c) Type Code Symbol Stamp: Not Applicable
(d) Certificate Of Authorization No.: Not Applicable
(e) Expiration Date: Not Applicable
4. Identification Of System: Residual Heat Removal (RHR) System
5. (a) Applicable Construction Code: ASME Section III, Code Class 2, 1971 Edition with Winter 1973 Addenda, Code Case: Note 1
(b) Applicable Edition Of ASME Section XI Used For Repair/Replacement Activity: 2001 Edition with 2003 Addenda
(c) Applicable ASME Section XI Code Case(s): None
6. Identification Of Components

Name Of Component	Name Of Manufacturer	Manufacturer's Serial No	National Board No	Other I.D.	Year Built	Corrected, Removed Or Installed	ASME Code Stamped (Yes Or No) Code Class
RHR(1)-2A	WPPSS*	RHR(1)-2A-P1	N/A	N/A	1983	See Item 7 Below	Yes, Code Class 2
RHR-V-622A	Borg Warner	80120	N/A	N/A	1983	Removed	Yes, Code Class 1
RHR-V-622A	Flowserve	23AYY	N/A	N/A	2004	Installed	Yes, Code Class 1

7. Description Of Work: Replaced existing valve RHR-V-622A. The replacement work was performed as follows:
1) Removed existing valve RHR-V-622A, Serial No 80120.
2) Installed replacement valve RHR-V-622A, Serial No 23AYY.
3) Made required socket welds.
4) Performed visual examination on the final socket welds. Visual examination results acceptable.
5) Performed liquid penetrant (PT) examination on the final socket welds. Liquid penetrant (PT) examination results acceptable.

NOTES -
1) The applicable ASME Code Cases, if any are listed on the ASME Code Data Reports.
2) * Company name changed from Washington Public Power Supply System (WPPSS) to Energy Northwest (EN) in 1999.
3) The existing ASME Code Stamped piping system in which the replacement valve RHR-V-622A, Serial No 23AYY was installed is Residual Heat Removal (RHR) piping system RHR(1)-2A-P1. This piping system is certified to comply with ASME Section III, Code Class 2, 1971 Edition with Winter 1973 Addenda requirements.
4) The replacement valve RHR-V-622A, Serial No 23AYY is certified to comply with ASME Section III, Code Class 1 and Code Editions and Code Addendas requirements listed as follows:
ASME Section III, Code Class 1, 1971 Edition with Winter 1973 Addenda requirements.
ASME Section III, Code Class 1, 1974 Edition with Summer 1975 Addenda requirements.
ASME Section III, Code Class 1, 1974 Edition with Winter 1975 Addenda requirements.
ASME Section III, Code Class 1, 1977 Edition with Summer 1977 Addenda requirements.
5) ASME Section III, Code Class 1 valve for ASME Section III, Code Class 2 application.
6) OEM/OES Borg Warner valves are now being manufactured by OEM/OES Flowserve.

PLAN No 2-2038

ENERGY NORTHWEST
People · Vision · Solutions

FORM NIS-2 OWNER'S REPORT FOR REPAIR/REPLACEMENT ACTIVITY (Back)

8 Tests Conducted: Hydrostatic [ ] **Pneumatic** [ ] **Nominal Operating Pressure** [ ] **Other** [ ]
Exempt [X] **Test Pressure:** Psig **Test Temperature:** °F

9. Remarks (Applicable Manufacturer's Data Reports to be attached): See attached NPV-1 Code Data Report for the replacement valve RHR-V-622A, Serial No 23AYY.

CERTIFICATE OF COMPLIANCE

I certify that the statements made in this Owner's Report are correct and that this conforms to the requirements of the ASME Code, Section XI.
Type Code Symbol Stamp: Not Applicable
Certificate Of Authorization No.: Not Applicable
Expiration Date: Not Applicable

Prepared By Kuldip Singh — Kuldip Singh - Program Lead Engineer (PLE)
Date 6/21/09

Signed By Kuldip Singh — Kuldip Singh - Program Lead Engineer (PLE)
Date 6/21/09.

CERTIFICATE OF INSERVICE INSPECTION

I, the undersigned, holding a valid commission issued by the National Board of Boiler and Pressure Vessel Inspectors and the State of _____ and employed by _____ of _____ have inspected the components described in this Owner's Report during the period _____ to _____ and state to the best of my knowledge and belief, the Owner has performed examinations and taken corrective measures described in this Owner's Report in accordance with the requirements of the ASME Code, Section XI.
By signing this certificate neither the Inspector nor his employer makes any warranty, expressed or implied, concerning the examinations and corrective measures described in this Owner's Report. Furthermore, neither the Inspector nor his employer shall be liable in any manner for any personal injury or property damage or a loss of any kind arising from or connected with this inspection.

N/R - Repair/Replacement 1" NPS And Smaller (Small Items) **Commissions** _____
Inspector's Signature — National Board, State, and Endorsements

Date _____

PLAN No. 2-2038

FORM NPV-1 N CERTIFICATE HOLDERS' DATA REPORT FOR NUCLEAR PUMPS OR VALVES*

As Required by the Provisions of the ASME Code, Section III, Div. 1

Philip Smith Pg. 1 of 2

1. Manufactured by Flowserve Corporation, 1900 S. Saunders St., Raleigh, NC 27603 6/24/05.
(Name and Address of N Certificate Holder)

2. Manufactured for Energy Northwest PO Box 968 Richland, WA 99352-0968
(Name and Address of Purchaser or Owner)

3. Location of Installation Columbia Generating Station, Snake River Warehouse, North Power Plant Loop Richland, WA 99352-0968
(Name and Address)

4. Pump or Valve Valve Nominal Inlet Size 3/4" (inch) Outlet Size 3/4" (inch)

	(a) Model No. Series No. or Type	(b) N Certificate Holder's Serial No.	(c) Canadian Registration No.	(d) Drawing No.	(e) Class	(f) Nat'l. Bd. No.	(g) Year Built
(1)	1500#	23AYY	N/A	76590 Rev. S	1	N/A	2004
(2)	1500#	24AYY	N/A	76590 Rev. S	1	N/A	2004
(3)	1500#	25AYY	N/A	76590 Rev. S	1	N/A	2004
(4)	1500#	26AYY	N/A	76590 Rev. S	1	N/A	2004
(5)	1500#	27AYY	N/A	76590 Rev. S	1	N/A	2004
(6)	1500#	28AYY	N/A	76590 Rev. S	1	N/A	2004
(7)	1500#	29AYY	N/A	76590 Rev. S	1	N/A	2004
(8)							
(9)	RHR-V-622A, S/N 23AYY						
(10)							

5. 3/4" 1500# Y-GLOBE
(Brief description of service for which equipment was designed)

*valve also meets ASME Sec. III 1971 Ed.Winter 1973 Add. Cl. 1, ASME Sec. III 1974 Ed. Summer 1975 Add. Cl. 1, ASME Sec. III 1974 Ed. Winter 1975 Add. Cl. 1 25826

6. Design Conditions 1650 (Pressure) psi 575 (Temperature) °F or Valve Pressure Class 1500 (1)

7. Cold Working Pressure 3600 psi at 100 °F.

8. Pressure Retaining Pieces

Mark No.	Material Spec. No.	Manufacturer	Remarks
(a) Castings			
M8108	AMS 5387	Tech Cast	Disc
(b) Forgings			
79932	SA105	Larson	Body
1G6158	SA564-630-H1100	Nova	Backseat

(1) For manually operated valves only

*Supplemental sheets in form of lists, sketches or drawings may be used provided (1) size is 8-1/2" x 11", (2) information in items 1, 2 and 5 on this Data Report is included on each sheet, and (3) each sheet is numbered and number of sheets is recorded at top of this form.

3

Valve S/N 23AYY through 29AYY

Mark No.	Material Spec. No.	Manufacturer	Remarks
(c) Bolting			
(d) Other Parts			

9. Hydrostatic test 5400 psi. Disk Differential test pressure 3960 psi.

CERTIFICATE OF COMPLIANCE

We certify that the statements made in this report are correct and that this pump, or valve, conforms to the rules of construction of the ASME Code for Nuclear Power Plant Components. Section III, Div. 1., Edition 1977*

Addenda Summer 1977*, Code Case No. N/A, Date 7/2/04

Signed Flowserve (N Certificate Holder) by [signature]

Our ASME Certificate of Authorization No. N-1562 to use the N (N) symbol expires 11-26-06 (Date)

CERTIFICATION OF DESIGN

Design information on file at Flowserve Corporation Raleigh, NC

Stress analysis report (Class 1 only) on file at Flowserve Corporation Raleigh, NC

Design specifications certified by (1) R.L. Schlosser / J.R. Cole

PE State WA Reg. No. 21701 / 20653

Stress analysis certified by (1) Ron Farrell

PE State NC Reg. No. 028656

(1) Signature not required. List name only.

CERTIFICATE OF SHOP INSPECTION

I, the undersigned, holding a valid commission issued by the National Board of Boiler and Pressure Vessel Inspectors and the State or Province of North Carolina and employed by HSB CT of Hartford Connecticut have inspected the pump, or valve, described in this Data Report on 7/2/04, and state that, to the best of my knowledge and belief, the N Certificate Holder has constructed this pump, or valve, in accordance with ASME Code, Section III.

By signing this certificate neither the Inspector nor his employer makes any warranty, expressed or implied, concerning the equipment described in this s Data Report. Furthermore, neither the Inspector nor his employer shall be liable in any manner for any personal injury or property damage or a loss of any kind arising from or connected with this Inspection.

Date 7/2/04

Signed [signature] (Inspector) Commissions NC 1421 (Nat'l Bd., State, Prov and No.)

PLAN No 2-2049

ENERGY NORTHWEST
People·Vision·Solutions

FORM NIS-2 OWNER'S REPORT FOR REPAIR/REPLACEMENT ACTIVITY
As Required By The Provisions Of The ASME Code Section XI

Date: 06/21/2009
Sheet: 1 Of 1
Unit: Not Applicable

1. **Owner:** Energy Northwest
   Address: Columbia Generating Station, North Power Plant Loop, Richland, Washington, 99352
2. **Plant:** Columbia Generating Station
   Address: Columbia Generating Station, North Power Plant Loop, Richland, Washington, 99352
3. **(a) Work Performed By:** Energy Northwest
   (b) Repair/Replacement Organization P.O. No, Job No, etc.: Energy Northwest
   (c) Type Code Symbol Stamp: Not Applicable
   (d) Certificate Of Authorization No.: Not Applicable
   (e) Expiration Date: Not Applicable
4. **Identification Of System:** Service Water (SW) System
5. **(a) Applicable Construction Code:** ASME Section III, Code Class 3, 1971 Edition with Winter 1973 Addenda, Code Case: Note 1
   (b) Applicable Edition Of ASME Section XI Used For Repair/Replacement Activity: 2001 Edition with 2003 Addenda
   (c) Applicable ASME Section XI Code Case(s): None
6. **Identification Of Components**

Name Of Component	Name Of Manufacturer	Manufacturer's Serial No	National Board No	Other I.D.	Year Built	Corrected, Removed Or Installed	ASME Code Stamped (Yes Or No) Code Class
SW(21)-2	WPPSS*	SW(21)-2-P1	N/A	N/A	1983	See Item 7 Below	Yes, Code Class 3
SW-V-155W	Borg Warner	16647	N/A	N/A	1977	Removed	Yes, Code Class 1
SW-V-155W	Flowserve	26AYY	N/A	N/A	2004	Installed	Yes, Code Class 1

7. **Description Of Work:** Replaced existing valve SW-V-155W. The replacement work was performed as follows:
   1) Removed existing valve SW-V-155W, Serial No 16647.
   2) Installed replacement pipe.
   3) Installed replacement valve SW-V-155W, Serial No 26AYY.
   4) Made required socket welds.
   5) Performed visual examination on the final socket welds. Visual examination results acceptable.
   6) Installed replacement threaded cap.

NOTES

1) The applicable ASME Code Cases, if any are listed on the ASME Code Data Reports.
2) * Company name changed from Washington Public Power Supply System (WPPSS) to Energy Northwest (EN) in 1999.
3) The existing ASME Code Stamped piping system in which the replacement valve SW-V-155W, Serial No 26AYY was installed is Service Water (SW) piping system SW(21)-2P-1. This piping system is certified to comply with ASME Section III, Code Class 3, 1971 Edition with Winter 1973 Addenda requirements.
4) The replacement valve SW-V-155W, Serial No 26AYY is certified to comply with ASME Section III, Code Class 1 and Code Editions and Code Addendas requirements listed as follows:
ASME Section III, Code Class 1, 1971 Edition with Winter 1973 Addenda requirements.
ASME Section III, Code Class 1, 1974 Edition with Summer 1975 Addenda requirements.
ASME Section III, Code Class 1, 1974 Edition with Winter 1975 Addenda requirements.
ASME Section III, Code Class 1, 1977 Edition with Summer 1977 Addenda requirements.
5) ASME Section III, Code Class 1 valve for ASME Section III, Code Class 3 application.
6) OEM/OES Borg Warner valves are now being manufactured by OEM/OES Flowserve.

PLAN No 2-2049

ENERGY NORTHWEST
People·Vision·Solutions

FORM NIS-2 OWNER'S REPORT FOR REPAIR/REPLACEMENT ACTIVITY (Back)

8 Tests Conducted: Hydrostatic [ ] **Pneumatic** [ ] **Nominal Operating Pressure** [ ] **Other** [ ]
Exempt [X] **Test Pressure:** Psig **Test Temperature:** °F

9. Remarks (Applicable Manufacturer's Data Reports to be attached): See attached NPV-1 Code Data Report for the replacement valve SW-V-155W, Serial No 26AYY.

CERTIFICATE OF COMPLIANCE

I certify that the statements made in this Owner's Report are correct and that this conforms to the requirements of the ASME Code, Section XI.
Type Code Symbol Stamp: Not Applicable
Certificate Of Authorization No.: Not Applicable
Expiration Date: Not Applicable

Prepared By Kuldip Singh - Program Lead Engineer (PLE) **Signed By** Kuldip Singh - Program Lead Engineer (PLE)

Date 6/21/09 **Date** 6/21/09.

CERTIFICATE OF INSERVICE INSPECTION

I, the undersigned, holding a valid commission issued by the National Board of Boiler and Pressure Vessel Inspectors and the State of _____ and employed by _____ of _____ have inspected the components described in this Owner's Report during the period _____ to _____ and state to the best of my knowledge and belief, the Owner has performed examinations and taken corrective measures described in this Owner's Report in accordance with the requirements of the ASME Code, Section XI.
By signing this certificate neither the Inspector nor his employer makes any warranty, expressed or implied, concerning the examinations and corrective measures described in this Owner's Report. Furthermore, neither the Inspector nor his employer shall be liable in any manner for any personal injury or property damage or a loss of any kind arising from or connected with this inspection.

N/R - Repair/Replacement 1" NPS And Smaller (Small Items) **Commissions** _____
Inspector's Signature National Board, State, and Endorsements

Date _____

PCAN No. 2-2049

FORM NPV-1 N CERTIFICATE HOLDERS' DATA REPORT FOR NUCLEAR PUMPS OR VALVES*

As Required by the Provisions of the ASME Code, Section III, Div. 1

1. Manufactured by Flowserve Corporation, 1900 S. Saunders St., Raleigh, NC 27603 6/24/09.
(Name and Address of N Certificate Holder)

2. Manufactured for Energy Northwest PO Box 968 Richland, WA 99352-0968
(Name and Address of Purchaser or Owner)

3. Location of Installation Columbia Generating Station, Snake River Warehouse, North Power Plant Loop Richland, WA 99352-0968
(Name and Address)

4. Pump or Valve Valve Nominal Inlet Size 3/4" (inch) Outlet Size 3/4" (inch)

	(a) Model No. Series No. or Type	(b) N Certificate Holder's Serial No.	(c) Canadian Registration No.	(d) Drawing No.	(e) Class	(f) Nat'l. Bd. No.	(g) Year Built
(1)	1500#	23AYY	N/A	76590 Rev. S	1	N/A	2004
(2)	1500#	24AYY	N/A	76590 Rev. S	1	N/A	2004
(3)	1500#	25AYY	N/A	76590 Rev. S	1	N/A	2004
(4)	1500#	26AYY	N/A	76590 Rev. S	1	N/A	2004
(5)	1500#	27AYY	N/A	76590 Rev. S	1	N/A	2004
(6)	1500#	28AYY	N/A	76590 Rev. S	1	N/A	2004
(7)	1500#	29AYY	N/A	76590 Rev. S	1	N/A	2004
(8)							
(9)							
(10)	SW-V-55W, S/N 26AYY.						

5. 3/4" 1500# Y-GLOBE
(Brief description of service for which equipment was designed)

*valve also meets ASME Sec. III 1971 Ed.Winter 1973 Add. Cl. 1, ASME Sec. III 1974 Ed. Summer 1975 Add. Cl. 1, ASME Sec. III 1974 Ed. Winter 1975 Add. Cl. 1 25826

6. Design Conditions 1650 (Pressure) psi 575 (Temperature) °F or Valve Pressure Class 1500 (1)

7. Cold Working Pressure 3600 psi at 100 °F.

8. Pressure Retaining Pieces

Mark No.	Material Spec. No.	Manufacturer	Remarks
(a) Castings			
M8108	AMS 5387	Tech Cast	Disc
(b) Forgings			
79932	SA105	Larson	Body
1G6158	SA564-630-H1100	Nova	Backseat

(1) For manually operated valves only

*Supplemental sheets in form of lists, sketches or drawings may be used provided (1) size is 8-1/2" x 11", (2) information in items 1, 2 and 5 on this Data Report is included on each sheet, and (3) each sheet is numbered and number of sheets is recorded at top of this form.

3

Valve S/N 23AYY through 29AYY

Mark No.	Material Spec. No.	Manufacturer	Remarks
(c) Bolting			
(d) Other Parts			

9. Hydrostatic test 5400 psi. Disk Differential test pressure 3960 psi.

CERTIFICATE OF COMPLIANCE

We certify that the statements made in this report are correct and that this pump, or valve, conforms to the rules of construction of the ASME Code for Nuclear Power Plant Components. Section III, Div. 1., Edition 1977*

Addenda Summer 1977*, Code Case No. N/A, Date 7/2/04

Signed Flowserve (N Certificate Holder) by [signature]

Our ASME Certificate of Authorization No. N-1562 to use the N (N) symbol expires 11-26-06 (Date)

CERTIFICATION OF DESIGN

Design information on file at Flowserve Corporation Raleigh, NC

Stress analysis report (Class 1 only) on file at Flowserve Corporation Raleigh, NC

Design specifications certified by (1) R.L. Schlosser / J.R. Cole

PE State WA Reg. No. 21701 / 20653

Stress analysis certified by (1) Ron Farrell

PE State NC Reg. No. 028656

(1) Signature not required. List name only.

CERTIFICATE OF SHOP INSPECTION

I, the undersigned, holding a valid commission issued by the National Board of Boiler and Pressure Vessel Inspectors and the State or Province of North Carolina and employed by HSB CT of Hartford Connecticut have inspected the pump, or valve, described in this Data Report on 7/2/04, and state that, to the best of my knowledge and belief, the N Certificate Holder has constructed this pump, or valve, in accordance with ASME Code, Section III.

By signing this certificate neither the Inspector nor his employer makes any warranty, expressed or implied, concerning the equipment described in this s Data Report. Furthermore, neither the Inspector nor his employer shall be liable in any manner for any personal injury or property damage or a loss of any kind arising from or connected with this Inspection.

Date 7/2/04

Signed [signature] (Inspector) Commissions NC 1421 (Nat'l Bd., State, Prov. and No.)

ENERGY NORTHWEST
People · Vision · Solutions

FORM NIS-2 OWNER'S REPORT FOR REPAIR/REPLACEMENT ACTIVITY
As Required By The Provisions Of The ASME Code Section XI

Date: 06/05/2009
Sheet: 1 Of 1
Unit: Not Applicable

1. **Owner:** Energy Northwest
   Address: Columbia Generating Station, North Power Plant Loop, Richland, Washington, 99352
2. **Plant:** Columbia Generating Station
   Address: Columbia Generating Station, North Power Plant Loop, Richland, Washington, 99352
3. **(a) Work Performed By:** Energy Northwest
   (b) Repair/Replacement Organization P.O. No, Job No, etc.: Energy Northwest
   (c) Type Code Symbol Stamp: Not Applicable
   (d) Certificate Of Authorization No.: Not Applicable
   (e) Expiration Date: Not Applicable
4. **Identification Of System:** Containment
5. **(a) Applicable Construction Code:** ASME Section III, Code Class MC, 1971 Edition with Summer 1972 Addenda, Code Case: Note 1
   (b) Applicable Edition Of ASME Section XI Used For Repair/Replacement Activity: 2001 Edition with 2003 Addenda
   (c) Applicable ASME Section XI Case(s): None
6. **Identification Of Components**

Name Of Component	Name Of Manufacturer	Manufacturer's Serial No	National Board No	Other I.D.	Year Built	Corrected, Removed Or Installed	ASME Code Stamped (Yes Or No) Code Class
Containment	PDM	12764	790	N/A	1976	See Item 7 Below	Yes, Code Class MC

7. **Description Of Work Performed:** The purpose of this NIS-2 form is to supplement the NIS-2 form originally issued for ASME Section XI Plan No 2-2066. The following visual examinations were performed for penetration X-97 (C-X-97) to satisfy the requirements discussed under note 2) below:

   1) Performed VT-1 visual examination on the penetration plug weld for ISI (PSI). VT-1 visual examination results acceptable.
   2) Performed VT-3 visual examination on the penetration plug weld for ISI (PSI). VT-3 visual examination results acceptable.

NOTES -

1) The applicable ASME Code Cases, if any are listed on the ASME Code Data Reports.
2) The requirements for VT-1 and VT-3 visual examination of the local weld repaired area encompassing approximately 25% of the total weld surface after weld repair on penetration X-97 (C-X-97) to satisfy ASME Section XI ISI (PSI) requirements were not satisfied. This non conformance is documented in Condition Report (CR) No 2-07-7267.
3) VT-1 visual examination Report No 3COV-25.
4) VT-3 visual examination Report No 3COV-24.

PLAN No 2-2066

ENERGY NORTHWEST
People · Vision · Solutions

FORM NIS-2 OWNER'S REPORT FOR REPAIR/REPLACEMENT ACTIVITY (Back)

8 Tests Conducted: Hydrostatic ☐ **Pneumatic** ☐ **Nominal Operating Pressure** ☐ **Other** ☐
Exempt ☐ **Test Pressure:** Psig **Test Temperature:** °F

9. Remarks (Applicable Manufacturer's Data Reports to be attached): None

CERTIFICATE OF COMPLIANCE

I certify that the statements made in this Owner's Report are correct and that this conforms to the requirements of the ASME Code, Section XI.
Type Code Symbol Stamp: Not Applicable
Certificate Of Authorization No.: Not Applicable
Expiration Date: Not Applicable

Prepared By Kuldip Singh - Program Lead Engineer (PLE) ***Signed By*** Kuldip Singh - Program Lead Engineer (PLE)

Date 6/5/09 ***Date*** 6/5/09

CERTIFICATE OF INSERVICE INSPECTION

I, the undersigned, holding a valid commission issued by the National Board of Boiler and Pressure Vessel Inspectors and the State of Washington ***and employed by*** Hartford Steam Boiler Of Connecticut of Hartford, Connecticut ***have inspected the components described in this Owner's Report during the period*** 6/1/2009 ***to*** 6/15/2009 ***and state to the best of my knowledge and belief, the Owner has performed examinations and taken corrective measures described in this Owner's Report in accordance with the requirements of the ASME Code, Section XI.***
By signing this certificate neither the Inspector nor his employer makes any warranty, expressed or implied, concerning the examinations and corrective measures described in this Owner's Report. Furthermore, neither the Inspector nor his employer shall be liable in any manner for any personal injury or property damage or a loss of any kind arising from or connected with this inspection.

Inspector's Signature ***Commissions*** 13172 WANI
National Board, State, and Endorsements

Date 6/15/2009

PLAN No 2-2070

ENERGY NORTHWEST
People·Vision·Solutions

FORM NIS-2 OWNER'S REPORT FOR REPAIR/REPLACEMENT ACTIVITY
As Required By The Provisions Of The ASME Code Section XI

1. Owner: Energy Northwest
Address: Columbia Generating Station, North Power Plant Loop, Richland, Washington, 99352
2. Plant: Columbia Generating Station
Address: Columbia Generating Station, North Power Plant Loop, Richland, Washington, 99352

Date: 07/03/2009
Sheet: 1 Of 1
Unit: Not Applicable

3. (a) Work Performed By: Energy Northwest
(b) Repair/Replacement Organization P.O. No, Job No, etc.: Energy Northwest
(c) Type Code Symbol Stamp: Not Applicable
(d) Certificate Of Authorization No.: Not Applicable
(e) Expiration Date: Not Applicable
4. Identification Of System: Containment Exhaust Purge (CEP) System
5. (a) Applicable Construction Code: ASME Section III, Code Class 2, 1971 Edition with Winter 1973 Addenda, Code Case: Note 1
(b) Applicable Edition Of ASME Section XI Used For Repair/Replacement Activity: 2001 Edition with 2003 Addenda
(c) Applicable ASME Section XI Code Case(s): None
6. Identification Of Components

Name Of Component	Name Of Manufacturer	Manufacturer's Serial No	National Board No	Other I.D.	Year Built	Corrected, Removed Or Installed	ASME Code Stamped (Yes Or No) Code Class
CEP(1)-1B	WPPSS*	CEP(1)-1B-P1	N/A	N/A	1983	See Item 7 Below	Yes, Code Class 2
CEP-V-800/12	Borg Warner	13264	N/A	N/A	1976	Removed	Yes, Code Class 1
CEP-V-800/12	Flowserve	12AZJ	N/A	N/A	2004	Installed	Yes, Code Class 1

7. Description Of Work: Replaced existing valve CEP-V-800/12. The replacement work was performed as follows:
1) Removed existing valve CEP-V-800/12, Serial No 13264.
2) Installed replacement valve CEP-V-800/12, Serial No 12AZJ.
3) Made required socket weld.
4) Performed visual examination on the final socket weld. Visual examination results acceptable.
5) Performed liquid penetrant (PT) examination on the final socket weld. Liquid penetrant (PT) examination results acceptable.

NOTES -
1) The applicable ASME Code Cases, if any are listed on the ASME Code Data Reports.
2) * Company name changed from Washington Public Power Supply System (WPPSS) to Energy Northwest (EN) in 1999.
3) The existing ASME Code Stamped piping system in which the replacement valve CEP-V-800/12, Serial No 12AZJ was installed is Containment Exhaust Purge (CEP) piping system CEP(1)-1B-P1. This piping system is certified to comply with ASME Section III, Code Class 2, 1971 Edition with Winter 1973 Addenda requirements.
4) The replacement valve CEP-V-800/12, Serial No 12AZJ is certified to comply with ASME Section III, Code Class 1, 1971 Edition with Winter 1973 Addenda requirements.
5) ASME Section III, Code Class 1 valve for ASME Section III, Code Class 2 application.
6) OEM/OES Borg Warner valves are now being manufactured by OEM/OES Flowserve.

PLAN No 2-2070

ENERGY NORTHWEST
People · Vision · Solutions

FORM NIS-2 OWNER'S REPORT FOR REPAIR/REPLACEMENT ACTIVITY (Back)

8 Tests Conducted: Hydrostatic [ ] **Pneumatic** [ ] **Nominal Operating Pressure** [ ] **Other** [ ]
Exempt [X] **Test Pressure:** Psig **Test Temperature:** °F

9. Remarks (Applicable Manufacturer's Data Reports to be attached): See attached NPV-1 Code Data Report for the replacement valve CEP-V-800/12, Serial No 12AZJ.

CERTIFICATE OF COMPLIANCE

I certify that the statements made in this Owner's Report are correct and that this conforms to the requirements of the ASME Code, Section XI.
Type Code Symbol Stamp: Not Applicable
Certificate Of Authorization No.: Not Applicable
Expiration Date: Not Applicable

Prepared By Kuldip Singh - Program Lead Engineer (PLE) ***Signed By*** Kuldip Singh - Program Lead Engineer (PLE)

Date 7/3/09 ***Date*** 7/3/09

CERTIFICATE OF INSERVICE INSPECTION

I, the undersigned, holding a valid commission issued by the National Board of Boiler and Pressure Vessel Inspectors and the State of _____ and employed by _____ of _____ have inspected the components described in this Owner's Report during the period _____ to _____ and state to the best of my knowledge and belief, the Owner has performed examinations and taken corrective measures described in this Owner's Report in accordance with the requirements of the ASME Code, Section XI.
By signing this certificate neither the Inspector nor his employer makes any warranty, expressed or implied, concerning the examinations and corrective measures described in this Owner's Report. Furthermore, neither the Inspector nor his employer shall be liable in any manner for any personal injury or property damage or a loss of any kind arising from or connected with this inspection.

N/R - Repair/Replacement 1" NPS And Smaller (Small Items) ***Commissions*** _____
Inspector's Signature National Board, State, and Endorsements

Date _____

PLAN No. 2-2070

FORM NPV-1 N CERTIFICATE HOLDERS' DATA REPORT FOR NUCLEAR PUMPS OR VALVES*

As Required by the Provisions of the ASME Code, Section III, Div. 1

1. Manufactured by Flowserve Corporation, 1900 S. Saunders St., Raleigh, NC 27603
(Name and Address of N Certificate Holder)

7/3/08.

2. Manufactured for Energy Northwest PO Box 968 Richland, WA 99352-0968
(Name and Address of Purchaser or Owner)

3. Location of Installation Columbia Generating Station, Snake River Warehouse, North Power Plant Loop Richland, WA 99352-0968
(Name and Address)

4. Pump or Valve Valve Nominal Inlet Size 3/4" (inch) Outlet Size 3/4" (inch)

	(a) Model No. Series No. or Type	(b) N Certificate Holder's Serial No.	(c) Canadian Registration No.	(d) Drawing No.	(e) Class	(f) Nat'l. Bd. No.	(g) Year Built
(1)	1500#	12AZJ	N/A	76590 Rev. S	1	N/A	2004
(2)							
(3)							
(4)							
(5)	CEP-V-800/12, S/N 12AZJ						
(6)							
(7)							
(8)							
(9)							
(10)							

5. 3/4" 1500# Y-GLOBE
(Brief description of service for which equipment was designed)

*valve also meets ASME Sec. III 1971 Ed.Winter 1973 Add. Cl. 1, ASME Sec. III 1974 Ed. Summer 1975 Add. Cl. 1, ASME Sec. III 1974 Ed. Winter 1975 Add. Cl. 1 25826

6. Design Conditions 1650 (Pressure) psi 575 (Temperature) °F or Valve Pressure Class 1500 (1)

7. Cold Working Pressure 3600 psi at 100 °F.

8. Pressure Retaining Pieces

Mark No.	Material Spec. No.	Manufacturer	Remarks
(a) Castings			
M8108	AMS 5387	Tech Cast	Disc
(b) Forgings			
79932	SA105	Larson	Body
1G6158	SA564-630-H1100	Nova	Backseat

(1) For manually operated valves only

*Supplemental sheets in form of lists, sketches or drawings may be used provided (1) size is 8-1/2" x 11", (2) information in items 1, 2 and 5 on this Data Report is included on each sheet, and (3) each sheet is numbered and number of sheets is recorded at top of this form.

2

SUPPLIER INSPECTOR / LEVEL / DATE
9-28-04

Valve S/N 12AZJ through *****

Mark No.	Material Spec. No.	Manufacturer	Remarks
(c) Bolting			
(d) Other Parts			

9. Hydrostatic test 5400 psi. Disk Differential test pressure 3960 psi.

CERTIFICATE OF COMPLIANCE

We certify that the statements made in this report are correct and that this pump, or valve, conforms to the rules of construction of the ASME Code for Nuclear Power Plant Components. Section III, Div. 1., Edition 1977*

Addenda Summer 1977*, Code Case No. N/A, Date 7/27/04

Signed Flowserve (N Certificate Holder) by [signature]

Our ASME Certificate of Authorization No. N-1562 to use the N (N) symbol expires 11-26-06 (Date)

CERTIFICATION OF DESIGN

Design information on file at Flowserve Corporation Raleigh, NC

Stress analysis report (Class 1 only) on file at Flowserve Corporation Raleigh, NC

Design specifications certified by (1) R.L. Schlosser / J.R. Cole

PE State WA Reg. No. 21701 / 20653

Stress analysis certified by (1) Ron Farrell

PE State NC Reg. No. 028656

(1) Signature not required. List name only.

CERTIFICATE OF SHOP INSPECTION

I, the undersigned, holding a valid commission issued by the National Board of Boiler and Pressure Vessel Inspectors and the State or Province of North Carolina and employed by HSB CT of Hartford Connecticut have inspected the pump, or valve, described in this Data Report on 7/27/04, and state that, to the best of my knowledge and belief, the N Certificate Holder has constructed this pump, or valve, in accordance with ASME Code, Section III.

By signing this certificate neither the Inspector nor his employer makes any warranty, expressed or implied, concerning the equipment described in this s Data Report. Furthermore, neither the Inspector nor his employer shall be liable in any manner for any personal injury or property damage or a loss of any kind arising from or connected with this Inspection.

Date 7/27/04

Signed [signature] (Inspector) Commissions NC 1421 (Nat'l Bd., State, Prov. and No.)

SATISFACTORY ✓ UNSATISFACTORY ____

PLAN No 2-2073

ENERGY NORTHWEST
People·Vision·Solutions

FORM NIS-2 OWNER'S REPORT FOR REPAIR/REPLACEMENT ACTIVITY
As Required By The Provisions Of The ASME Code Section XI

Date: 04/07/2008
Sheet: 1 Of 1
Unit: Not Applicable

1. **Owner:** Energy Northwest
   Address: Columbia Generating Station, North Power Plant Loop, Richland, Washington, 99352
2. **Plant:** Columbia Generating Station
   Address: Columbia Generating Station, North Power Plant Loop, Richland, Washington, 99352
3. **(a) Work Performed By:** Energy Northwest
   (b) Repair/Replacement Organization P.O. No, Job No, etc.: Energy Northwest
   (c) Type Code Symbol Stamp: Not Applicable
   (d) Certificate Of Authorization No.: Not Applicable
   (e) Expiration Date: Not Applicable
4. **Identification Of System:** Reactor Core Isolation Cooling (RCIC) System
5. **(a) Applicable Construction Code:** ASME Section III, Code Class 1, 1971 Edition with Winter 1973 Addenda, Code Case: Note 1
   (b) Applicable Edition Of ASME Section XI Used For Repair/Replacement Activity: 2001 Edition with 2003 Addenda
   (c) Applicable ASME Section XI Case(s): None
6. **Identification Of Components**

Name Of Component	Name Of Manufacturer	Manufacturer's Serial No	National Board No	Other I.D.	Year Built	Corrected, Removed Or Installed	ASME Code Stamped (Yes Or No) Code Class
RCIC(50)-1	WPPSS *	RCIC(50)-1-P1	N/A	N/A	1983	See Item 7 Below	Yes, Code Class 2
RCIC-RV-19T	Crosby	N63028-00-0002	N/A	N/A	1980	Removed	Yes, Code Class 2
RCIC-RV-19T	Crosby	N63028-00-0007	N/A	N/A	1994	Installed	Yes, Code Class 2

7. **Description Of Work Performed:** Replaced existing relief valve RCIC-RV-19T. The replacement work was performed as follows:
   1) Removed existing relief valve RCIC-RV-19T, Serial No N63028-00-0002.
   2) Installed replacement relief valve RCIC-RV-19T, Serial No N63028-00-0007.
   3) Reinstalled existing studs for the relief valve inlet joint.
   4) Reinstalled existing nuts for the relief valve inlet joint.
   5) Performed VT-2 visual examination during pressure test to confirm pressure boundary integrity of the relief valve inlet joint. No evidence of leakage during the pressure test.

NOTES -

1) The applicable ASME Code Cases, if any are listed on the ASME Code Data Reports.
2) * Company name changed from Washington Public Power Supply System (WPPSS) to Energy Northwest (EN) in 1999.
3) The existing ASME Code Stamped piping system applicable to the replacement relief valve RCIC-RV-19T, Serial No N63028-00-0007 is Reactor Core Isolation Cooling (RCIC) piping system RCIC(50)-1-P1. This piping system is certified to comply with ASME Section III, Code Class 2, 1971 Edition with Winter 1973 Addenda requirements.
4) The replacement relief valve RCIC-RV-19T, Serial No N63028-00-0007 is certified to comply with ASME Section III, Code Class 2, 1977 Edition with Summer 1977 Addenda requirements.

PLAN No 2-2073

ENERGY NORTHWEST
People · Vision · Solutions

FORM NIS-2 OWNER'S REPORT FOR REPAIR/REPLACEMENT ACTIVITY (Back)

8 Tests Conducted: Hydrostatic [ ] **Pneumatic** [ ] **Nominal Operating Pressure** [X] **Other** [ ]
Exempt [ ] **Test Pressure:** 65 Psig **Test Temperature:** 78° F

9. Remarks (Applicable Manufacturer's Data Reports to be attached): See attached NV-1 Code Data Report for the replacement relief valve RCIC-RV-19T, Serial No N63028-00-0007.

CERTIFICATE OF COMPLIANCE

I certify that the statements made in this Owner's Report are correct and that this conforms to the requirements of the ASME Code, Section XI.
Type Code Symbol Stamp: Not Applicable
Certificate Of Authorization No.: Not Applicable
Expiration Date: Not Applicable

Prepared By Kuldip Singh - Program Lead Engineer (PLE) ***Signed By*** Kuldip Singh - Program Lead Engineer (PLE)

Date 4/7/08 ***Date*** 4/7/08

CERTIFICATE OF INSERVICE INSPECTION

I, the undersigned, holding a valid commission issued by the National Board of Boiler and Pressure Vessel Inspectors and the State of Washington ***and employed by*** Hartford Steam Boiler Of Connecticut of Hartford, Connecticut ***have inspected the components described in this Owner's Report during the period*** 02/12/08 ***to*** 04/10/08 ***and state to the best of my knowledge and belief, the Owner has performed examinations and taken corrective measures described in this Owner's Report in accordance with the requirements of the ASME Code, Section XI.***
By signing this certificate neither the Inspector nor his employer makes any warranty, expressed or implied, concerning the examinations and corrective measures described in this Owner's Report. Furthermore, neither the Inspector nor his employer shall be liable in any manner for any personal injury or property damage or a loss of any kind arising from or connected with this inspection.

Inspector's Signature ***Commissions*** 13172 W,A,N,I
National Board, State, and Endorsements

Date 04/10/08

PLAN No. 2-2073

CROSBY

CROSBY VALVE & GAGE COMPANY
WRENTHAM, MA

4/1/08

Q.C.-44D-1A
SHEET 1 OF 2

FORM NV-1, N CERTIFICATE HOLDERS' DATA REPORT FOR SAFETY AND SAFETY RELIEF VALVES
As Required by the Provisions of the ASME Code, Section III, Division 1

1. Manufactured by Crosby Valve & Gage Company 43 Kendrick St. Wrentham, MA 02093
(Name and Address of N Certificate Holder)
Crosby Factory Order No. NV4000256 Customer Order No. 236808

2. Manufactured for WASHINGTON PUBLIC POWER SUPPLY RICHLAND,WA 99352
(Name and Address of Purchaser or Owner)

3. Location of Installation NUCLEAR PROJECT NO.1 RICHLAND ,WA 99352
(Name and Address)

4. -- (CRN) DS-CA63028 REV.B (Drawing No.) -- (Nat'l Brd. No.) 1994 (Year Built)

5. Valve JO-25-WR (Model No., Series No.) Identifying Nos. N63028-00-0007 (N Certificate Holder's Serial No.)
Type RELIEF Valve I.D./Tag No. SPARE
Orifice Size 1.363 Inch Nominal Inlet Size 2 Inch Outlet Size 3 Inch

6. Set Pressure 99 120 F Rated Relieving Temperature
Stamped Capacity 200 GPM WTR @ 70 DEG @ 10 % Overpressure -- Blowdown (psig) 10% OF SP
Hydrostatic Test (psig) Inlet 225 Outlet 100
(Applicable to Valves for Closed Systems Only)

PRESSURE RETAINING PIECES Relief RV-19T, S/N N63028-00-0007

	Serial No. Identification	Material Specification Including Type or Grade
a. Castings		
Body	N93013-33-0007	ASME SA351 GR.CF8M
Bonnet	N93015-33-0007	ASME SA351 GR.CF8M
b. Bar Stock & Forgings		
Nozzle	N93014-34-0012	ASME SA479 TYPE 316
Disc	N88842-54-0065	ASME SA479 TYPE 316
	N91025-30-4468	
Spring Washers	N91025-30-4478	ASME SA479 TYPE 410
Adjusting Bolt	N92376-54-0188	ASME SA193 GR.B6
Spindle	N90142-81-0198	ASME SA193 GR.B6
c. Spring	NX2770-0071	ASTM A313 TYPE 316
d. Bolting	---	---
e. Other Pieces		
BONNET STUD	N95882	ASME SA193 GR.B7
BONNET NUT	N95883	ASME SA194 GR.2H

12/13/94

CERTIFICATE OF COMPLIANCE

We certify that the statements made in this report are correct and that this valve conforms to the rules of construction of the ASME Code for Nuclear Power Plant Components, Section III, Div. 1 1977 Edition, (Date)
Addenda SUMMER 1977, Code Case No.--.
(Date)

Class 2

Date 13 Dec 94 Signed Crosby Valve & Gage Company by Lawrence [illegible]
(N Certificate Holder)

Our ASME Certificate of Authorization No. 1878 to use the NV symbol expires 30 SEP 95.
(Date)

CERTIFICATE OF DESIGN

Design information on file at Crosby Valve & Gage Company
Stress analysis report (Class 1 only) on file at ---

Design specifications certified by* VENKATACHALAN MANI
PE State WA Reg No. 15065
Stress Report Certified by* ---
PE State --- Reg No. ---

*Signature not required - list name only.

CERTIFICATE OF SHOP INSPECTION

I, the undersigned, holding a valid commission issued by the National Board of Boiler and Pressure Vessel Inspectors and the State or Province of Massachusetts and employed by * Arkwright Mutual Insurance Co. of Norwood, Massachusetts have inspected the pump, or valve, described in this Data Report on Dec 13, 1994 and state that to the best of my knowledge and belief, the N Certificate Holder has constructed this pump, or valve, in accordance with the ASME Code for Nuclear Power Plant Components.

By signing this certificate, neither the Inspector nor his employer makes any warrant, expressed or implied, concerning the equipment described in this Data Report. Furthermore, neither the Inspector nor his employer shall be liable in any manner for any personal injury or property damage or a loss of any kind arising from or connected with this inspection.

Factory Mutual Systems

Date 12/13, 1994.

Signed [illegible] Commissions MA1455
(Inspector) (Nat'l. Bd., State, Prov. and No.)

*Factory Mutual System

PLAN No 2-2075

ENERGY NORTHWEST
People · Vision · Solutions

FORM NIS-2 OWNER'S REPORT FOR REPAIR/REPLACEMENT ACTIVITY
As Required By The Provisions Of The ASME Code Section XI

Date: 03/22/2008
Sheet: 1 Of 1
Unit: Not Applicable

1. **Owner:** Energy Northwest
   Address: Columbia Generating Station, North Power Plant Loop, Richland, Washington, 99352
2. **Plant:** Columbia Generating Station
   Address: Columbia Generating Station, North Power Plant Loop, Richland, Washington, 99352
3. **(a) Work Performed By:** Energy Northwest
   (b) Repair/Replacement Organization P.O. No, Job No, etc.: Energy Northwest
   (c) Type Code Symbol Stamp: Not Applicable
   (d) Certificate Of Authorization No.: Not Applicable
   (e) Expiration Date: Not Applicable
4. **Identification Of System:** Standby Liquid Control (SLC) System
5. **(a) Applicable Construction Code:** ASME Section III, Code Class 2, 1971 Edition with Winter 1973 Addenda, Code Case: Note 1
   (b) Applicable Edition Of ASME Section XI Used For Repair/Replacement Activity: 2001 Edition with 2003 Addenda
   (c) Applicable ASME Section XI Case(s): None
6. **Identification Of Components**

Name Of Component	Name Of Manufacturer	Manufacturer's Serial No	National Board No	Other I.D.	Year Built	Corrected, Removed Or Installed	ASME Code Stamped (Yes Or No) Code Class
SLC(1)-1S	WPPSS*	SLC(1)-1S-P1	N/A	N/A	1982	See Item 7 Below	Yes, Code Class 2
SLC(2)-3S	WPPSS*	SLC(2)-3S-P1	N/A	N/A	1983	See Item 7 Below	Yes, Code Class 2
SLC-RV-29A	Lonergan	137180-1-1	N/A	N/A	1994	Removed	Yes, Code Class 2
SLC-RV-29A	Lonergan	509258-82-1	N/A	N/A	1978	Installed	Yes, Code Class 2

7. **Description Of Work Performed:** Replaced existing relief valve SLC-RV-29A. The replacement work was performed as follows:
   1) Removed existing relief valve SLC-RV29A, Serial No 137180-1-1.
   2) Installed replacement relief valve SLC-RV-29A, Serial No 509258-82-1.
   3) Performed VT-2 visual examination during pressure test to confirm pressure boundary integrity of the relief valve outlet joint. No evidence of leakage during the pressure test.

NOTES

1) The applicable ASME Code Cases, if any are listed on the ASME Code Data Reports.
2) * Company name changed from Washington Public Power Supply System (WPPSS) to Energy Northwest in 1999.
3) The existing ASME Code Stamped piping system in which the replacement valve SLC-RV-29A, Serial No 509258-82-1 was installed is Standby Liquid Control (SLC) piping system SLC(1)-1S-P1 (For outlet). This piping system is certified to comply with ASME Section III, Code Class 2, 1971 Edition with Winter 1973 Addenda requirements.
4) The existing ASME Code Stamped piping system in which the replacement valve SLC-RV-29A, Serial No 509258-82-1 was installed is Standby Liquid Control (SLC) piping system SLC(2)-3S-P1 (For inlet). This piping system is certified to comply with ASME Section III, Code Class 2, 1971 Edition with Winter 1973 Addenda requirements.
5) The replacement valve SLC-RV-29A, Serial No 509258-82-1 is certified to comply with ASME Section III, Code Class 2, 1974 Edition with Winter 1974 Addenda requirements.

PLAN No 2-2075

ENERGY NORTHWEST
People·Vision·Solutions

FORM NIS-2 OWNER'S REPORT FOR REPAIR/REPLACEMENT ACTIVITY (Back)

8 Tests Conducted: Hydrostatic [ ] **Pneumatic** [ ] **Nominal Operating Pressure** [X] **Other** [ ]
Exempt [ ] **Test Pressure:** Static Head **Test Temperature:** 81° F

9. Remarks (Applicable Manufacturer's Data Reports to be attached): See attached NV-1 Code Data Report for the replacement valve SLC-RV-29A, Serial No 509258-82-1.

CERTIFICATE OF COMPLIANCE

I certify that the statements made in this Owner's Report are correct and that this conforms to the requirements of the ASME Code, Section XI.
Type Code Symbol Stamp: Not Applicable
Certificate Of Authorization No.: Not Applicable
Expiration Date: Not Applicable

Prepared By Kuldip Singh - Program Lead Engineer (PLE) **Signed By** Kuldip Singh - Program Lead Engineer (PLE)

Date 3/22/08 **Date** 3/22/08

CERTIFICATE OF INSERVICE INSPECTION

I, the undersigned, holding a valid commission issued by the National Board of Boiler and Pressure Vessel Inspectors and the State of Washington ***and employed by*** Hartford Steam Boiler Of Connecticut of Hartford, Connecticut ***have inspected the components described in this Owner's Report during the period*** 11/29/07 ***to*** 03/31/08 ***and state to the best of my knowledge and belief, the Owner has performed examinations and taken corrective measures described in this Owner's Report in accordance with the requirements of the ASME Code, Section XI.***
By signing this certificate neither the Inspector nor his employer makes any warranty, expressed or implied, concerning the examinations and corrective measures described in this Owner's Report. Furthermore, neither the Inspector nor his employer shall be liable in any manner for any personal injury or property damage or a loss of any kind arising from or connected with this inspection.

Inspector's Signature **Commissions** 13172 W,A,N,I
National Board, State, and Endorsements

Date 03/31/08

FORM NV-1 FOR SAFETY AND SAFETY RELIEF VALVES*

As required by the Provisions of the ASME Code Rules PLAN No. 2-2075

1. Manufactured by T. E. Lonergan Company, Red Lion Rd., W. of Verree, Philadelphia, Pa. 19115
   Name and Address

   Model No. D-50D/S4 Order No. 509258 Contract Date 8/5/75 National Board No.

2. Manufactured For Bovee & Crail Const. Co. and General Energy Resources, Inc., Richland, Wash. Order No. 215-15190
   Name and Address

3. Owner Washington Public Power, Hanford, Washington 99352
   Name and Address

4. Location of Plant Hanford #2 Jobsite, 12 Miles North of Richland, Washington 99352

5. Valve Identification SLC-RV-29A Serial No. 509258-82-1 Drawing No. A-2346, No Rev.

   Type Safety Relief Valve (Safety; Safety Relief; Pilot; Power Actuated) Orifice Size 0.110 Sq. Inch Pipe Size ____ Inch Inlet 1" Inch Outlet 2"

6. Set Pressure (PSIG) 1400 * 200 °F Rated Temperature

   SLC-RV-29A S/N 509258-82-1 12/15/78

   Stamped Capacity 67.2 G.P.M. ~~XXXXXX~~ ~~XXXX~~ @ 10 % Overpressure Blowdown (PSIG) **

   Hydrostatic Test (PSIG) Inlet 2100 Outlet ~~XXXXXX~~ Valve 425

7. The material, design, construction and workmanship comply with ASME Code, Section III, Winter Addenda

   Class 2, Edition 1974, Addenda Date 12/31/74, Code No. 1555

BOVEE & CRAIL / G.E.R.I.
Q.A./Q.C. APPROVED
SIGN
DATE 1-22-75 TAG # 3436

Pressure Containing or Pressure Retaining Components

	Serial No. or Identification	Material Specification Including Type or Grade
a. Castings		
Body	D371-1	ASME SA-351 (CF8M) Type 316
Bonnet ~~or Yoke~~	E5369-1	ASME SA-351 (CF8M) Type 316
b. Bar Stock and Forgings		WBG BR 215 15018
Support Rods		
Nozzle	02607	ASME SA-479 Type 316
Disc	G8864	ASME SA-479 Type 316
Spring Washers	02607	ASME SA-479 Type 316
Adjusting Screw	G9913	ASME SA-479 Type 316
Spindle	G9938	ASME SA-479 Type 316

*Supplemental sheets in form of lists, sketches or drawings may be used provided (1) size is 8½" x 11", (2) information in items 1-2 on this data report is included on each sheet, and (3) each sheet is numbered and number of sheets is recorded at top of this form.

2

2 1 2 7 1 0 0 4

	Serial No. or Identification	Material Specification Including Type or Grade
c. Spring	Heat No. 00653	ASTM A-313 Type 316
d. Bolting	Studs - Cert. of Conformance	ASME SA-320, GR.B8
	Nuts - Cert. of Conformance	ASME SA-194, GR. 8

e. Other Parts such as Pilot Components

Cap	02977	ASME SA-479 Type 316

BOVE / G.E.R.I.
Q.I. ROVED
SIGN: SNR
DATE: 12-22-79

** Blowdown not specified by code.

We certify that the statements made in this report are correct.

Date 12-15 19 78 Signed J. E. LONERGAN CO. (Manufacturer) By T. A. NICKEY

Certificate of Authorization No. N-1443 expires Aug. 9, 1979.

CERTIFICATE OF SHOP INSPECTION

I, the undersigned, holding a valid commission issued by the National Board of Boiler and Pressure Vessel Inspectors and the State or Province of Penna. and employed by Hartford Stm. Boiler I.&I. Co. of Hartford, Conn. have inspected the equipment described in this Data Report on Dec 15 19 78 and state that to the best of my knowledge and belief, the Manufacturer has constructed this equipment in accordance with the applicable Subsections of ASME Section III.

By signing this certificate, neither the Inspector nor his employer makes any warranty, expressed or implied, concerning the equipment described in this Data Report. Furthermore, neither the Inspector nor his employer shall be liable in any manner for any personal injury or property damage or a loss of any kind arising from or connected with this inspection.

Date Dec 15 19 78 WBG BR 215 15018

Walter J. Comegys (Inspector) Commissions Pa 1786 (National Board, State, Province and No.)

2 1279 1005

PLAN No 2-2076

ENERGY NORTHWEST
People·Vision·Solutions

FORM NIS-2 OWNER'S REPORT FOR REPAIR/REPLACEMENT ACTIVITY
As Required By The Provisions Of The ASME Code Section XI

1. Owner: Energy Northwest
Address: Columbia Generating Station, North Power Plant Loop, Richland, Washington, 99352
2. Plant: Columbia Generating Station
Address: Columbia Generating Station, North Power Plant Loop, Richland, Washington, 99352

Date: 03/22/2008
Sheet: 1 Of 1
Unit: Not Applicable

3. (a) Work Performed By: Energy Northwest
(b) Repair/Replacement Organization P.O. No, Job No, etc.: Energy Northwest
(c) Type Code Symbol Stamp: Not Applicable
(d) Certificate Of Authorization No.: Not Applicable
(e) Expiration Date: Not Applicable
4. Identification Of System: Standby Liquid Control (SLC) System
5. (a) Applicable Construction Code: ASME Section III, Code Class 2, 1971 Edition with Winter 1973 Addenda, Code Case: Note 1
(b) Applicable Edition Of ASME Section XI Used For Repair/Replacement Activity: 2001 Edition with 2003 Addenda
(c) Applicable ASME Section XI Case(s): None
6. Identification Of Components

Name Of Component	Name Of Manufacturer	Manufacturer's Serial No	National Board No	Other I.D.	Year Built	Corrected, Removed Or Installed	ASME Code Stamped (Yes Or No) Code Class
SLC(1)-1S	WPPSS*	SLC(1)-1S-P1	N/A	N/A	1982	See Item 7 Below	Yes, Code Class 2
SLC(2)-3S	WPPSS*	SLC(2)-3S-P1	N/A	N/A	1983	See Item 7 Below	Yes, Code Class 2
SLC-RV-29B	Lonergan	137180-1-2	N/A	N/A	1994	Removed	Yes, Code Class 2
SLC-RV-29B	Lonergan	139407-1-2	N/A	N/A	1974	Installed	Yes, Code Class 2

7. Description Of Work Performed: Replaced existing relief valve SLC-RV-29B. The replacement work was performed as follows:
1) Removed existing relief valve SLC-RV29B, Serial No 137180-1-1.
2) Installed replacement relief valve SLC-RV-29B, Serial No 139407-1-2.
3) Performed VT-2 visual examination during pressure test to confirm pressure boundary integrity of the relief valve outlet joint. No evidence of leakage during the pressure test.

NOTES -
1) The applicable ASME Code Cases, if any are listed on the ASME Code Data Reports.
2) * Company name changed from Washington Public Power Supply System (WPPSS) to Energy Northwest in 1999.
3) The existing ASME Code Stamped piping system in which the replacement valve SLC-RV-29B, Serial No 139407-1-2 was installed is Standby Liquid Control (SLC) piping system SLC(1)-1S-P1 (For outlet). This piping system is certified to comply with ASME Section III, Code Class 2, 1971 Edition with Winter 1973 Addenda requirements.
4) The existing ASME Code Stamped piping system in which the replacement valve SLC-RV-29B, Serial No 139407-1-2 was installed is Standby Liquid Control (SLC) piping system SLC(2)-3S-P1 (For inlet). This piping system is certified to comply with ASME Section III, Code Class 2, 1971 Edition with Winter 1973 Addenda requirements.
5) The replacement valve SLC-RV-29B, Serial No 139407-1-2 is certified to comply with ASME Section III, Code Class 2, 1974 Edition with Winter 1974 Addenda requirements.

PLAN No 2-2076

ENERGY NORTHWEST
People·Vision·Solutions

FORM NIS-2 OWNER'S REPORT FOR REPAIR/REPLACEMENT ACTIVITY (Back)

8 Tests Conducted: Hydrostatic [ ] **Pneumatic** [ ] **Nominal Operating Pressure** [X] **Other** [ ]
Exempt [ ] **Test Pressure:** Static Head **Test Temperature:** 81° F

9. Remarks (Applicable Manufacturer's Data Reports to be attached): See attached NV-1 Code Data Report for the replacement valve SLC-RV-29B, Serial No 139407-1-2.

CERTIFICATE OF COMPLIANCE

I certify that the statements made in this Owner's Report are correct and that this conforms to the requirements of the ASME Code, Section XI.
Type Code Symbol Stamp: Not Applicable
Certificate Of Authorization No.: Not Applicable
Expiration Date: Not Applicable

Prepared By Kuldip Singh - Program Lead Engineer (PLE) ***Signed By*** Kuldip Singh - Program Lead Engineer (PLE)

Date 3/31/08 ***Date*** 3/31/08

CERTIFICATE OF INSERVICE INSPECTION

I, the undersigned, holding a valid commission issued by the National Board of Boiler and Pressure Vessel Inspectors and the State of Washington ***and employed by*** Hartford Steam Boiler Of Connecticut of Hartford, Connecticut ***have inspected the components described in this Owner's Report during the period*** 11/29/07 ***to*** 03/31/08 ***and state to the best of my knowledge and belief, the Owner has performed examinations and taken corrective measures described in this Owner's Report in accordance with the requirements of the ASME Code, Section XI.***
By signing this certificate neither the Inspector nor his employer makes any warranty, expressed or implied, concerning the examinations and corrective measures described in this Owner's Report. Furthermore, neither the Inspector nor his employer shall be liable in any manner for any personal injury or property damage or a loss of any kind arising from or connected with this inspection.

Inspector's Signature ***Commissions*** 13172 W, A, N, I
National Board, State, and Endorsements

Date 03/31/08

PLAN No. 2-2076

FORM NV-1 CERTIFICATE HOLDERS' DATA REPORT FOR PRESSURE OR VACUUM RELIEF VALVES*

As Required by the Provisions of the ASME Code, Section III, Division 1

Kunkle Industries, Inc.

1. Manufactured and certified by Lonergan Valve Division, 8222 Bluffton Road, Fort Wayne, IN 46809 (name and address of NV Certificate Holder)

2. Manufactured for Washington Public Power Supply System, Accts. Payable, MD 055, P.O. 968, Richland, WA 99352-0968 (name and address of Purchaser)

3. Location of installation Washington Public Power Supply System, WNP-2 OPS WHS Complex, Whse. #1, North Power Plant Loop, Richland, WA 99352 (name and address)

4. Valve ND50DS421-DG1400 (model no., series no.) Orifice size .394 (in.) Nom. inlet size 1" (in.) Outlet size 2" (in.)

5. ASME Code, Section III, Division 1: 1974 (edition) Winter 1974 (addenda date) 2 (class) N/A (Code Case no.)

6. Type Spring (spring, pilot or power operated) 1400 (set pressure, psig) N/A (blowdown, psi) 100° F (rated temp.) 2100 (hydro. test, psig, inlet) at 33° min. °F

7. Identification 139407-1-1 through 139407-1-2 (Cert. Holder's serial no.) N/A (CRN) A940014 Rev. 0 (drawing no.) N/A (Nat'l. Bd. no.) 1994 (year built)

8. Control ring settings N/A SLC-RV-29B, S/N 139407-1-2

9. Pressure retaining items:

	Serial No. or Identification	Mat'l. Spec., Including Type or Grade	Tensile Strength
Body	S6601-1, -2	SA-351 CF8M	70 ksi
Bonnet ~~XXXXX~~	T4795-5, -6	SA-351 CF8M	70 ksi
~~XXXXXXXXX~~ 3/8" Plug	18450 / 73028	SA-479 TY316	75 ksi
Nozzle	703685	SA-479 TY316	75 ksi
Disk	97477	SA-479 TY316	75 ksi
Spring~~XXXXXX~~ Step	31828	SA-479 TY316	75 ksi
~~XXXXXXXXXXXX~~ Cap	H8506-4, -12	SA-351 CF8M	70 ksi
~~XXXXX~~ Gag Plug Screw	30091	SA-479 TY316	75 ksi
Spring	20330	ASTM A-313 TY316	*
~~XXXX~~ Ring Pin Screw	30091	SA-479 TY316	75 ksi
~~XXXXXXX~~ Stem	704631	SA-479 TY316	75 ksi

(Continued below)

10. Relieving capacity 63,500 (127 GPM) (steam or fluid, lb/hr) @ 10% (psi) overpressure as certified by the National Board 01/25/85 (date)

11. Remarks: * Spring exempt from material requirements of NC-2000 but meets design requirements of NC-3595.

9. Pressure Retaining Items: (Continued)

Compression Screw	700737	SA-479 TY316	75 ksi
Heavy Hex Nut	8079541/N4C	SA-194 GR 2H	N/A
Stud	8866612	SA-193 GR B7	125 ksi

CERTIFICATION OF DESIGN

Design Specification certified by D. Murphy P.E. State WA Reg. no. 12542

Design Report certified by N/A P.E. State N/A Reg. no. N/A

CERTIFICATE OF COMPLIANCE

We certify that the statements made in this report are correct and that this valve conforms to the rules for construction of the ASME Code, Section III, Division 1.

NV Certificate of Authorization No. N-2853 Expires November 18, 1994

Date 8-3-94 Name Kunkle Industries, Inc. Lonergan Valve Division (NV Certificate Holder) Signed Debra A. Witzel (authorized representative)

* Supplemental information in form of lists, sketches, or drawings may be used provided (1) size is 8½ × 11, (2) information in items 1 through 4 on this Data Report is included on each sheet, (3) each sheet is numbered and the number of sheets is recorded at the top of this form.

(12/88) This form (E00042) may be obtained from the Order Dept., ASME, 22 Law Drive, Box 2300, Fairfield, NJ 07007-2300.

8/2/94

Certificate Holder's Serial No. 139407-1-1 thru 139407-1-2

CERTIFICATE OF INSPECTION

I, the undersigned, holding a valid commission issued by the National Board of Boiler and Pressure Vessel Inspectors and the State or Province of Michigan and employed by HSBI & I Co. of Hartford, CT have inspected the valve described in this Data Report on August 4, 1994, and state that to the best of my knowledge and belief, the Certificate Holder has constructed this valve in accordance with the ASME Code, Section III, Division 1.

By signing this certificate neither the inspector nor his employer makes any warranty, expressed or implied, concerning the component described in this Data Report. Furthermore, neither the inspector nor his employer shall be liable in any manner for any personal injury or property damage or a loss of any kind arising from or connected with this inspection.

Date 8-4-94 Signed [signature] (Authorized Inspector) Commissions N137444 (NB/IA), Ind 840 (Nat'l. Bd. (incl. endorsements) and state or prov. and no.)

PLAN No 2-2078

ENERGY NORTHWEST
People · Vision · Solutions

FORM NIS-2 OWNER'S REPORT FOR REPAIR/REPLACEMENT ACTIVITY
As Required By The Provisions Of The ASME Code Section XI

Date: 03/22/2008
Sheet: 1 Of 1
Unit: Not Applicable

1. Owner: Energy Northwest
Address: Columbia Generating Station, North Power Plant Loop, Richland, Washington, 99352
2. Plant: Columbia Generating Station
Address: Columbia Generating Station, North Power Plant Loop, Richland, Washington, 99352
3. (a) Work Performed By: Energy Northwest
(b) Repair/Replacement Organization P.O. No, Job No, etc.: Energy Northwest
(c) Type Code Symbol Stamp: Not Applicable
(d) Certificate Of Authorization No.: Not Applicable
(e) Expiration Date: Not Applicable
4. Identification Of System: Service Water (SW) System
5. (a) Applicable Construction Code: ASME Section III, Code Class 3, 1971 Edition with Winter 1973 Addenda, Code Case: Note 1
(b) Applicable Edition Of ASME Section XI Used For Repair/Replacement Activity: 2001 Edition with 2003 Addenda
(c) Applicable ASME Section XI Case(s): None
6. Identification Of Components

Name Of Component	Name Of Manufacturer	Manufacturer's Serial No	National Board No	Other I.D.	Year Built	Corrected, Removed Or Installed	ASME Code Stamped (Yes Or No) Code Class
SW(1)-2	WPPSS*	SW(1)-2-P1	N/A	N/A	1983	See Item 7 Below	Yes, Code Class 3
CCH-RV-2A	Crosby	N63032-00-0060	N/A	N/A	1995	Removed	Yes, Code Class 3
CCH-RV-2A	Crosby	N63032-02-0061	N/A	N/A	2007	Installed	Yes, Code Class 3

7. Description Of Work Performed: Replaced existing relief valve CCH-RV-2A. The replacement work was performed as follows:
1) Removed existing relief valve CCH-RV-2A, Serial No N63032-00-0060.
2) Installed replacement relief valve CCH-RV-2A, Serial No N63032-02-0061.
3) Installed four (4) replacement studs for the relief valve inlet joint.
4) Installed eight (8) replacement nuts for the relief valve inlet joint.
5) Installed four (4) replacement studs for the relief valve outlet joint.
6) Installed eight (8) replacement nuts for the relief valve outlet joint.

NOTES -
1) The applicable ASME Code Cases, if any are listed on the ASME Code Data Reports.
2) * Company name changed from Washington Public Power Supply System (WPPSS) to Energy Northwest in 1999.
3) The existing ASME Code Stamped piping system in which the replacement valve CCH-RV-2A, Serial No N63032-02-0061 was installed is Service Water (SW) piping system SW(1)-2-P1. This piping system is certified to comply with ASME Section III, Code Class 3, 1971 Edition with Winter 1973 Addenda requirements.
4) The replacement valve CCH-RV-2A, Serial No N63032-02-0061 is certified to comply with ASME Section III, Code Class 3, 1977 Edition with Summer 1977 Addenda requirements.

PLAN No 2-2078

ENERGY NORTHWEST
People·Vision·Solutions

FORM NIS-2 OWNER'S REPORT FOR REPAIR/REPLACEMENT ACTIVITY (Back)

8 Tests Conducted: Hydrostatic [ ] **Pneumatic** [ ] **Nominal Operating Pressure** [ ] **Other** [ ]
Exempt [X] **Test Pressure:** Psig **Test Temperature:** °F

9. Remarks (Applicable Manufacturer's Data Reports to be attached): See attached NV-1 Code Data Report for the replacement valve CCH-RV-2A, Serial No N63032-02-0061.

CERTIFICATE OF COMPLIANCE

I certify that the statements made in this Owner's Report are correct and that this conforms to the requirements of the ASME Code, Section XI.
Type Code Symbol Stamp: Not Applicable
Certificate Of Authorization No.: Not Applicable
Expiration Date: Not Applicable

Prepared By Kuldip Singh - Program Lead Engineer (PLE) **Signed By** Kuldip Singh - Program Lead Engineer (PLE)

Date 3/22/08 **Date** 3/22/08

CERTIFICATE OF INSERVICE INSPECTION

I, the undersigned, holding a valid commission issued by the National Board of Boiler and Pressure Vessel Inspectors and the State of Washington ***and employed by*** Hartford Steam Boiler Of Connecticut of Hartford, Connecticut ***have inspected the components described in this Owner's Report during the period*** 12/20/07 ***to*** 03/31/08 ***and state to the best of my knowledge and belief, the Owner has performed examinations and taken corrective measures described in this Owner's Report in accordance with the requirements of the ASME Code, Section XI.***
By signing this certificate neither the Inspector nor his employer makes any warranty, expressed or implied, concerning the examinations and corrective measures described in this Owner's Report. Furthermore, neither the Inspector nor his employer shall be liable in any manner for any personal injury or property damage or a loss of any kind arising from or connected with this inspection.

Inspector's Signature **Commissions** 13172 W,A,N,I
National Board, State, and Endorsements

Date 03/31/08

PLAN No. 2-2078

Q.C.-44D-1A
Sheet 1 of 2

3/22/08

FORM NV-1, N CERTIFICATE HOLDERS' DATA REPORT FOR SAFETY AND SAFETY RELIEF VALVES
As required by the Provisions of the ASME Code, Section III, Division 1

1. Manufactured by Anderson Greenwood Crosby, 43 Kendrick St., Wrentham, MA 02093
(Name and Address of N Certificate Holder)
Crosby Factory Order No. G087240000 Customer Order No. 00322755

2. Manufactured for ENERGY NORTHWEST
(Name and Address of Purchaser or Owner)

3. Location of Installation COLUMBIA GEN. STA.
(Name and Address)

4. N/A (CRN) DS-C-63032-2 REV. 0 (Drawing No.) -- (Nat'l. Brd. No.) 2007 (Year Built)

5. Valve JMB-WR (Model No., Series No.) Identifying Nos. N63032-02-0061 (N Certificate Holder's Serial No.)
Type SAFETY RELIEF (Safety, Safety Relief; Pilot; Power Actuated) Valve I.D./Tag No. 02CCH-RV-2A
Orifice Size 0.327 inch Nominal Inlet Size 3/4 inch Outlet Size 1 inch

6. Set Pressure (psig) 75 120 ° F Rated Relieving Temperature
Stamped Capacity 16 GPM WTR. @ 70 DEG.F @ 10 % Overpressure -- Blowdown (psig) 10% OF S.P.

Hydrostatic Test (psig) Inlet 425 Outlet 100
(Applicable to Valves for Closed Systems Only)

Pressure Retaining Pieces CCH-RV-2A, S/N N63032-02-0061

	Serial No. Identification	Material Specification Including Type or Grade
a. Castings		
Body	—	—
Bonnet	—	—
b. Bar Stock & Forgings		
Nozzle	—	—
Disc	N93001-41-0184	ASME SA479 TYPE 316
	N91098-12-5434	
Spring Washers	N91098-12-5429	ASME SA479 TYPE 410
Adjusting Bolt	N92379-88-0714	ASME SA193 GR.B6
Spindle	N90221-03-1063	ASME SA193 GR.B6
c. Spring	NX2719-0325	ASTM A229 CL. 1
d. Bolting	—	—
e. Other Pieces		
Base	N92799-43-0114	ASME SA479 TYPE 316
Cylinder	N93004-36-0093	ASME SA216 GR.WCB

1.1

CERTIFICATE OF COMPLIANCE

We certify that the statements made in this report are correct and that this valve conforms to the rules of construction of the ASME Code for Nuclear Power Plant Components, Section III, Div. 1 1977 (Date) Edition.
Addenda SUMMER 1977 (Date), Code Case No. --.

Class 3

Date 27-APR-07 Signed Anderson Greenwood Crosby Wrentham, MA (N Certificate Holder) by [signature]

Our ASME Certificate of Authorization No. N-1878 to use the NV symbol expires 30-Sep-07 (Date)

CERTIFICATE OF DESIGN

Design information on file at Anderson Greenwood Crosby - Wrentham, MA

Stress analysis report (Class 1 only) on file at

Design specifications certified by [1] VENKATACHALAN MANI

PE State WA Reg. No. 15065

Stress report certified by [1]

PE State Reg. No.

[1] Signature not required - list name only.

CERTIFICATE OF SHOP INSPECTION

I, the undersigned, holding a valid commission issued by the National Board of Boiler and Pressure Vessel Inspectors and the State or Province of MA and employed by HSB - CT of Hartford, CT have inspected the pump, or valve, described in this Data Report on 4-25, 2007 and state that to the best of my knowledge and belief, the N Certificate Holder has constructed this pump, or valve, in accordance with the ASME Code for Nuclear Power Plant Components.

By signing this certificate, neither the Inspector nor his employer makes any warrant, expressed or implied, concerning the equipment described in this Data Report. Furthermore, neither the Inspector nor his employer shall be liable in any manner for any personal injury or property damage or a loss of any kind arising from or connected with this inspection.

Date April 27, 2007

Signed [signature] (Inspector) Commissions MA-1420 A, N, I (Nat'l. Bd., State, Prov. and No.)

1.2

PLAN No 2-2091

ENERGY NORTHWEST
People · Vision · Solutions

FORM NIS-2 OWNER'S REPORT FOR REPAIR/REPLACEMENT ACTIVITY
As Required By The Provisions Of The ASME Code Section XI

1. Owner: Energy Northwest
Address: Columbia Generating Station, North Power Plant Loop, Richland, Washington, 99352
2. Plant: Columbia Generating Station
Address: Columbia Generating Station, North Power Plant Loop, Richland, Washington, 99352

Date: 01/30/2008
Sheet: 1 Of 1
Unit: Not Applicable

3. (a) Work Performed By: Energy Northwest
(b) Repair/Replacement Organization P.O. No, Job No, etc.: Energy Northwest
(c) Type Code Symbol Stamp: Not Applicable
(d) Certificate Of Authorization No.: Not Applicable
(e) Expiration Date: Not Applicable
4. Identification Of System: Process Instrumentation (PI) System
5. (a) Applicable Construction Code: ASME Section III, Code Class 3, 1974 Edition with Winter 1975 Addenda, Code Case: Note 1
(b) Applicable Edition Of ASME Section XI Used For Repair/Replacement Activity: 2001 Edition with 2003 Addenda
(c) Applicable ASME Section XI Code Case(s): None
6. Identification Of Components

Name Of Component	Name Of Manufacturer	Manufacturer's Serial No	National Board No	Other I.D.	Year Built	Corrected, Removed Or Installed	ASME Code Stamped (Yes Or No) Code Class
PI(1)-ST-X72f	JCI	PI(1)-ST-X72f	N/A	N/A	1983	See Item 7 Below	Yes, Code Class 3

7. Description Of Work: Replaced (modified/rerouted) existing tubing to CMS-SR-22. The work was performed as follows:
1) Removed existing tubing material.
2) Installed replacement tubing material such as union, tee, reducer, connector, bushing and tubing.
3) Made required socket welds.
4) Performed visual examination on the final socket welds. Visual examination results acceptable.
5) Installed support material such as plate and angle iron.
6) Made required welds.
7) Performed visual examination on the final welds. Visual examination results acceptable.
8) Installed remaining support material such as block clamps, cap screws and nuts.

NOTES -
1) The applicable ASME Code Cases, if any are listed on the ASME Code Data Reports.

PLAN No 2-2091

ENERGY NORTHWEST
People · Vision · Solutions

FORM NIS-2 OWNER'S REPORT FOR REPAIR/REPLACEMENT ACTIVITY (Back)

8 Tests Conducted: Hydrostatic [ ] **Pneumatic** [ ] **Nominal Operating Pressure** [ ] **Other** [ ]
Exempt [X] **Test Pressure:** Psig **Test Temperature:** °F

9. Remarks (Applicable Manufacturer's Data Reports to be attached): None

CERTIFICATE OF COMPLIANCE

I certify that the statements made in this Owner's Report are correct and that this conforms to the requirements of the ASME Code, Section XI.
Type Code Symbol Stamp: Not Applicable
Certificate Of Authorization No.: Not Applicable
Expiration Date: Not Applicable

Prepared By Kuldip Singh - Program Lead Engineer (PLE) ***Signed By*** Kuldip Singh - Program Lead Engineer (PLE)

Date 1/30/08 ***Date*** 1/30/08

CERTIFICATE OF INSERVICE INSPECTION

I, the undersigned, holding a valid commission issued by the National Board of Boiler and Pressure Vessel Inspectors and the State of _____ and employed by _____ of _____ have inspected the components described in this Owner's Report during the period _____ to _____ and state to the best of my knowledge and belief, the Owner has performed examinations and taken corrective measures described in this Owner's Report in accordance with the requirements of the ASME Code, Section XI.
By signing this certificate neither the Inspector nor his employer makes any warranty, expressed or implied, concerning the examinations and corrective measures described in this Owner's Report. Furthermore, neither the Inspector nor his employer shall be liable in any manner for any personal injury or property damage or a loss of any kind arising from or connected with this inspection.

Not Required - Repair/Replacement 1" NPS And Smaller ***Commissions*** _____
Inspector's Signature National Board, State, and Endorsements

Date _____

PLAN No 2-2092

ENERGY NORTHWEST
People · Vision · Solutions

FORM NIS-2 OWNER'S REPORT FOR REPAIR/REPLACEMENT ACTIVITY
As Required By The Provisions Of The ASME Code Section XI

Date: 10/10/2007
Sheet: 1 Of 1
Unit: Not Applicable

1. Owner: Energy Northwest
Address: Columbia Generating Station, North Power Plant Loop, Richland, Washington, 99352
2. Plant: Columbia Generating Station
Address: Columbia Generating Station, North Power Plant Loop, Richland, Washington, 99352
3. (a) Work Performed By: Energy Northwest
(b) Repair/Replacement Organization P.O. No, Job No, etc.: Energy Northwest
(c) Type Code Symbol Stamp: Not Applicable
(d) Certificate Of Authorization No.: Not Applicable
(e) Expiration Date: Not Applicable
4. Identification Of System: Process Instrumentation (PI) System
5. (a) Applicable Construction Code: ASME Section III, Code Class 3, 1974 Edition with Winter 1975 Addenda, Code Case: Note 1
(b) Applicable Edition Of ASME Section XI Used For Repair/Replacement Activity: 2001 Edition with 2003 Addenda
(c) Applicable ASME Section XI Code Case(s): None
6. Identification Of Components

Name Of Component	Name Of Manufacturer	Manufacturer's Serial No	National Board No	Other I.D.	Year Built	Corrected, Removed Or Installed	ASME Code Stamped (Yes Or No) Code Class
PI(1)-4S-X29c	JCI	PI(1)-4S-X29c	N/A	N/A	1983	See Item 7 Below	Yes, Code Class 3

7. Description Of Work: Replaced (modified/rerouted) existing tubing to CMS-SR-21. The work was performed as follows:
1) Removed existing tubing material.
2) Installed replacement tubing material such as union, tee, reducer, connector, bushing and tubing.
3) Made required socket welds.
4) Performed visual examination on the final socket welds. Visual examination results acceptable.
5) Installed support material such as plate and angle iron.
6) Made required welds.
7) Performed visual examination on the final welds. Visual examination results acceptable.
8) Installed remaining support material such as block clamps, cap screws and nuts.

NOTES
1) The applicable ASME Code Cases, if any are listed on the ASME Code Data Reports.

PLAN No 2-2092

ENERGY NORTHWEST
People · Vision · Solutions

FORM NIS-2 OWNER'S REPORT FOR REPAIR/REPLACEMENT ACTIVITY (Back)

8 Tests Conducted: Hydrostatic [ ] **Pneumatic** [ ] **Nominal Operating Pressure** [ ] **Other** [ ]
Exempt [X] **Test Pressure:** Psig **Test Temperature:** °F

9. Remarks (Applicable Manufacturer's Data Reports to be attached): None

CERTIFICATE OF COMPLIANCE

I certify that the statements made in this Owner's Report are correct and that this conforms to the requirements of the ASME Code, Section XI.
Type Code Symbol Stamp: Not Applicable
Certificate Of Authorization No.: Not Applicable
Expiration Date: Not Applicable

Prepared By Kuldip Singh - Program Lead Engineer (PLE) **Signed By** Kuldip Singh - Program Lead Engineer (PLE)

Date 10/10/07 **Date** 10/10/07

CERTIFICATE OF INSERVICE INSPECTION

I, the undersigned, holding a valid commission issued by the National Board of Boiler and Pressure Vessel Inspectors and the State of _____ and employed by _____ of _____ have inspected the components described in this Owner's Report during the period _____ to _____ and state to the best of my knowledge and belief, the Owner has performed examinations and taken corrective measures described in this Owner's Report in accordance with the requirements of the ASME Code, Section XI.
By signing this certificate neither the Inspector nor his employer makes any warranty, expressed or implied, concerning the examinations and corrective measures described in this Owner's Report. Furthermore, neither the Inspector nor his employer shall be liable in any manner for any personal injury or property damage or a loss of any kind arising from or connected with this inspection.

Not Required - Repair/Replacement 1" NPS And Smaller **Commissions** _____
Inspector's Signature National Board, State, and Endorsements

Date _____

PLAN No 2-2113

ENERGY NORTHWEST
People · Vision · Solutions

FORM NIS-2 OWNER'S REPORT FOR REPAIR/REPLACEMENT ACTIVITY
As Required By The Provisions Of The ASME Code Section XI

1. Owner: Energy Northwest
Address: Columbia Generating Station, North Power Plant Loop, Richland, Washington, 99352
2. Plant: Columbia Generating Station
Address: Columbia Generating Station, North Power Plant Loop, Richland, Washington, 99352

Date: 03/24/2008
Sheet: 1 Of 1
Unit: Not Applicable

3. (a) Work Performed By: Energy Northwest
(b) Repair/Replacement Organization P.O. No, Job No, etc.: Energy Northwest
(c) Type Code Symbol Stamp: Not Applicable
(d) Certificate Of Authorization No.: Not Applicable
(e) Expiration Date: Not Applicable
4. Identification Of System: Service Water (SW) System
5. (a) Applicable Construction Code: ASME Section III, Code Class 3, 1971 Edition with Winter 1973 Addenda, Code Case: Note 1
(b) Applicable Edition Of ASME Section XI Used For Repair/Replacement Activity: 2001 Edition with 2003 Addenda
(c) Applicable ASME Section XI Case(s): None
6. Identification Of Components

Name Of Component	Name Of Manufacturer	Manufacturer's Serial No	National Board No	Other I.D.	Year Built	Corrected, Removed Or Installed	ASME Code Stamped (Yes Or No) Code Class
SW(70)-1-HPCS	WPPSS*	SW(70)-1-HPCS-P1	N/A	N/A	1983	See Item 7 Below	Yes, Code Class 3
HPCS-P-2	Pacific Pumps	48153	49	N/A	1974	Removed	Yes, Code Class 3
HPCS-P-2	Flowserve	06RLCA0369101001	N/A	N/A	2007	Installed	Yes, Code Class 3

7. Description Of Work Performed: Replaced existing pump HPCS-P-2. The replacement work was performed as follows:
1) Removed existing pump HPCS-P-2, Serial No 48153.
2) Installed replacement pump HPCS-P-2, Serial No 06RLCA0369101001.
3) Performed VT-2 visual examination during pressure test to confirm pressure boundary integrity of the bolted joints. No evidence of leakage during the pressure test.

NOTES -
1) The applicable ASME Code Cases, if any are listed on the ASME Code Data Reports.
2) * Company name changed from Washington Public Power Supply System (WPPSS) to Energy Northwest (EN) in 1999.
3) The existing ASME Code Stamped piping system in which the replacement pump HPCS-P-2, Serial No 06RLCA0369101001 was installed is Service Water (SW) piping system SW(70)-1-HPCS-P1. This piping system is certified to comply with ASME Section III, Code Class 3, 1971 Edition with Winter 1973 Addenda requirements.
4) The replacement valve pump HPCS-P-2, Serial No 06RLCA0369101001 is certified to comply with ASME Section III, Code Class 3, 1971 Edition with no Addenda requirements.
5) OEM/OES Pacific Pumps are now being manufactured by OEM/OES Flowserve.

PLAN No 2-2113

ENERGY NORTHWEST
People·Vision·Solutions

FORM NIS-2 OWNER'S REPORT FOR REPAIR/REPLACEMENT ACTIVITY (Back)

8 Tests Conducted: Hydrostatic [ ] Pneumatic [ ] Nominal Operating Pressure [X] Other [ ]
Exempt [ ] Test Pressure: 60 Psig Test Temperature: 47° F

9. Remarks (Applicable Manufacturer's Data Reports to be attached): See the following attached Code Data Reports for the replacement pump HPCS-P-2, Serial No 06RLCA0369101001:

Item	Code Data Report	Serial No
Pump	NPV-1	06RLCA0369101001
Lower Column	N-2	NPT32862-1
Middle Columns	N-2	NPT32861-1 through NPT32861-6
Upper Column	N-2	NPT32860-1
Retainer Bearing	N-2	NPT32939-1 through NPT32939-4
Retainer Bearing With Lugs	N-2	NPT32940-1 through NPT32940-3

CERTIFICATE OF COMPLIANCE

I certify that the statements made in this Owner's Report are correct and that this conforms to the requirements of the ASME Code, Section XI.
Type Code Symbol Stamp: Not Applicable
Certificate Of Authorization No.: Not Applicable
Expiration Date: Not Applicable

Prepared By Kuldip Singh - Program Lead Engineer (PLE) **Signed By** Kuldip Singh - Program Lead Engineer (PLE)

Date 3/24/08 **Date** 3/24/08

CERTIFICATE OF INSERVICE INSPECTION

I, the undersigned, holding a valid commission issued by the National Board of Boiler and Pressure Vessel Inspectors and the State of Washington *and employed by* Hartford Steam Boiler Of Connecticut of Hartford, Connecticut *have inspected the components described in this Owner's Report during the period* 01/31/08 *to* 03/31/08 *and state to the best of my knowledge and belief, the Owner has performed examinations and taken corrective measures described in this Owner's Report in accordance with the requirements of the ASME Code, Section XI.*
By signing this certificate neither the Inspector nor his employer makes any warranty, expressed or implied, concerning the examinations and corrective measures described in this Owner's Report. Furthermore, neither the Inspector nor his employer shall be liable in any manner for any personal injury or property damage or a loss of any kind arising from or connected with this inspection.

Inspector's Signature **Commissions** 13172 W, A, N, I
National Board, State, and Endorsements

Date 03/31/08

PLAN No. 2-2113

FORM NPV-1 CERTIFICATE HOLDERS' DATA REPORT FOR NUCLEAR PUMPS OR VALVES*
As Required by the Provisions of the ASME Code, Section III, Division 1

Pg. 1 of 2

3/24/08

1. Manufactured and certified by Flowserve Pump Division, Nuclear Products Operation 2300 E. Vernon Ave. Vernon, CA 90058
(name and address of N Certificate Holder)
2. Manufactured for Energy Northwest, PO Box 968, Richland WA, 99352-0968
(name and address of Purchaser)
3. Location of installation Energy Northwest,ColumbiaGen.sta.,SnakeRiver whse.complex,N.PowerPlantloopRichlandWA
(name and address)
4. Model No., Series No., or Type 6X14WY2-stg. Drawing AXS48153 Rev. 8 CRN NA
5. ASME Code, Section III, Division 1: 1971 (edition) no addenda (addenda date) 3 (class) NA (Code Case no.)
6. Pump or valve Pump Nominal inlet size 6" (in.) Outlet size N/A (in.)
7. Material: Body NA Bonnet NA Disk NA Bolting NA

(a) Cert. Holder's Serial No.	(b) Nat'l Board No.	(c) Body Serial No.	(d) Bonnet Serial No.	(e) Disk Serial No.
06RLCA0369101001	NA	NA	NA	NA

HPCS-P-2, S/N 06RLCA0369101001

* Supplemental information in form of lists, sketches, or drawings may be used provided (1) size is 8½ × 11, (2) information in items 1 through 4 on this Data Report is included on each sheet, (3) each sheet is numbered and the number of sheets is recorded at the top of this form.

ANI SIGNATURE
**AMENDED 01/17/2008
FLOWSERVE REP

FORM NPV-1 (Back — Pg. 2 of 2)

Certificate Holder's Serial No. 06RLCA0369101001

8. Design conditions 115 (pressure) psi 100 (temperature) °F or valve pressure class NA (1)

9. Cold working pressure NA psi at 100°F

10. Hydrostatic test 200 psi. Disk differential test pressure NA psi

11. Remarks: Material, Fabrication and Examination: ASME Code section III. 2001 Edition, 2003 addenda.
Design and stamping: ASME section III, Class 3, 1971 Edition, No addenda
Note: Nameplate attached by drive screws.
**Testing: ASME Code Section III, 2001 Edition, 2003 Addenda. See N-2 Code Data Reports for Column S/N NPT32862-1, NPT 32861-1 thru -6, & NPT 32860-1, and for BRG. Retainers S/N NPT 32939-1 thru -4, & NPT 32940-1 thru -3.

CERTIFICATION OF DESIGN

Design Specification certified by Fred J. Mollerus P.E. State WA Reg. no. 8273
Design Report certified by W. O. Shepard P.E. State CA Reg. no. 11036

CERTIFICATE OF COMPLIANCE

We certify that the statements made in this report are correct and that this pump or valve conforms to the rules for construction of the ASME Code, Section III, Division 1.
N Certificate of Authorization No. N-1130 Expires June 10, 2008

Date 7/27/07 Name Flowserve Pump Division, Nuclear Products Operation (N Certificate Holder) Signed (authorized representative)

CERTIFICATE OF INSPECTION

I, the undersigned, holding a valid commission issued by the National Board of Boiler and Pressure Vessel Inspectors and the State or Province of California and employed by HSB-CT of Hartford, CT have inspected the pump, or valve, described in this Data Report on 7/27/2007, and state that to the best of my knowledge and belief, the Certificate Holder has constructed this pump, or valve, in accordance with the ASME Code, Section III, Division 1.

By signing this certificate, neither the inspector nor his employer makes any warranty, expressed or implied, concerning the component described in this Data Report. Furthermore, neither the inspector nor his employer shall be liable in any manner for any personal injury or property damage or a loss of any kind arising from or connected with this inspection.

Date 7/27/2007 Signed (Authorized Inspector) Commissions CA# 2081 [Nat'l. Bd. (incl. endorsements) and state or prov. and no.]

(1) For manually operated valves only.

PLAN NO. 2-2113

Philip Sugg
3/24/08

FORM N-2 CERTIFICATE HOLDERS' DATA REPORT FOR IDENTICAL NUCLEAR PARTS AND APPURTENANCES*

As Required by the Provisions of the ASME Code, Section III
Not to Exceed One Day's Production

1. Manufactured and certified by Energy Steel & Supply Co., 2715 Paldan Drive, Auburn Hills, MI 48326 (name and address of NPT Certificate Holder)
2. Manufactured for Flowserve Pump Corporation, 2300 East Vernon Ave., Vernon, CA 90058 (name and address of purchaser)
3. Location of installation Columbia Nuclear Generating Station, Richland, Washington (name and address)
4. Type

C16977 Rev. B	SA-516 Gr 70 / SA-106 Gr B	70ksi/60ksi	N/A	2006
(drawing no.)	(mat'l. spec. no.)	(tensile strength)	(CRN)	(year built)

5. ASME Code, Section III, Division 1:

2001	2003	ND Class 3	N/A
(edition)	(addenda date)	(class)	(Code Case no.)

6. Fabricated in accordance with Const. Spec. (Div. 2 only) _____ (no.) Revision _____ Date _____
7. Remarks: Flowserve PO No. RLLA16197, Item No. RLCA0369110334231, Column, Lower
8. Nom. thickness (in.) .5 Min. design thickness (in.) N/A Dia. ID (ft & in.) 0ft7.625in Length overall (ft & in.) 2ft7.18in
9. When applicable, Certificate Holders' Data Reports are attached for each item of this report:

Part or Appurtenance Serial Number	National Board No. in Numerical Order	Part or Appurtenance Serial Number	National Board No. in Numerical Order
(1) NPT32862-1	N/A	(26)	
(2)		(27)	
(3)		(28)	
(4)		(29)	
(5) HPCS-P-2, S/N 06RLCA0369101001		(30)	
(6)		(31)	
(7)		(32)	
(8)		(33)	
(9)		(34)	
(10)		(35)	
(11)		(36)	
(12)		(37)	
(13)		(38)	
(14)		(39)	
(15)		(40)	
(16)		(41)	
(17)		(42)	
(18)		(43)	
(19)		(44)	
(20)		(45)	
(21)		(46)	
(22)		(47)	
(23)		(48)	
(24)		(49)	
(25)		(50)	

10. Design pressure 115 psi. Temp. 100 °F. Hydro. test pressure 180 at 61 F (when applicable) at temp. °F

* Supplemental information in the form of lists, sketches, or drawings may be used provided (1) size is 8½ x 11, (2) information in items 2 and 3 on this Data Report is included on each sheet, (3) each sheet is numbered and the number of sheets is recorded at the top of this form.

FORM N-2 (Back — Pg 2 of 2)

Certificate Holder's Serial Nos. NPT32862-1 through NPT32862-1

CERTIFICATION OF DESIGN

Design specifications certified by N/A (when applicable) P.E. State _____ Reg. no. _____

Design report* certified by N/A (when applicable) P.E. State _____ Reg. no. _____

CERTIFICATE OF COMPLIANCE

We certify that the statements made in this report are correct and that this (these) Part (Pump Column) conforms to the rules of construction of the ASME Code, Section III, Division 1.

NPT Certificate of Authorization No. N-2928 Expires June 21, 2008

Date 1/15/07 Name Energy Steel & Supply Co. (NPT Certificate Holder) Signed _____ (authorized representative)

CERTIFICATE OF INSPECTION

I, the undersigned, holding a valid commission issued by the National Board of Boiler and Pressure Vessel Inspectors and the State or Province of Michigan and employed by HSB CT of Hartford, CT have inspected these items described in this Data Report on Jan. 12, 2007, and state that to the best of my knowledge and belief, the Certificate Holder has fabricated these parts or appurtenances in accordance with the ASME Code, Section III, Division 1. Each part listed has been authorized for stamping on the date shown above.

By signing this certificate, neither the inspector nor his employer makes any warranty, expressed or implied, concerning the equipment described in this Data Report. Furthermore, neither the inspector nor his employer shall be liable in any manner for any personal injury or property damage or loss of any kind arising from or connected with this inspection.

Date Jan. 15, 2007 Signed _____ (Authorized Nuclear Inspector) Commissions MI610 (Nat'l. Bd. (incl. endorsements) and state or prov. and no.)

PLAN No. 2-2113

Philip Sims
3/24/08

FORM N-2 CERTIFICATE HOLDERS' DATA REPORT FOR IDENTICAL NUCLEAR PARTS AND APPURTENANCES*

As Required by the Provisions of the ASME Code, Section III
Not to Exceed One Day's Production

1. Manufactured and certified by Energy Steel & Supply Co., 2715 Paldan Drive, Auburn Hills, MI 48326 (name and address of NPT Certificate Holder)
2. Manufactured for Flowserve Pump Corporation, 2300 East Vernon Ave., Vernon, CA 90058 (name and address of purchaser)
3. Location of installation Columbia Nuclear Generating Station, Richland, Washington (name and address)
4. Type C16975 Rev. B (drawing no.) | SA-516 Gr70 / SA106 Gr B (mat'l. spec. no.) | 7ksi/60ksi (tensile strength) | N/A (CRN) | 2006 (year built)
5. ASME Code, Section III, Division 1: 2001 (edition) | 2003 (addenda date) | ND Class 3 (class) | N/A (Code Case no.)
6. Fabricated in accordance with Const. Spec. (Div. 2 only) _____ (no.) Revision _____ Date _____
7. Remarks: Flowserve PO No. RLLA16197, Item No. RLCA0369110334230, Column, Middle
8. Nom. thickness (in.) .5 Min. design thickness (in.) N/A Dia. ID (ft & in.) 0ft7.625in Length overall (ft & in.) 2ft6.18in
9. When applicable, Certificate Holders' Data Reports are attached for each item of this report:

Part or Appurtenance Serial Number	National Board No. in Numerical Order	Part or Appurtenance Serial Number	National Board No. in Numerical Order
(1) NPT32861-1	N/A	(26)	
(2) NPT32861-2	N/A	(27)	
(3) NPT32861-3	N/A	(28)	
(4) NPT32861-4	N/A	(29)	
(5) NPT32861-5	N/A	(30)	
(6) NPT32861-6	N/A	(31)	
(7)		(32)	
(8)		(33)	
(9)		(34)	
(10) HPCS-P-2, S/N 06 RLCA 0369101001		(35)	
(11)		(36)	
(12)		(37)	
(13)		(38)	
(14)		(39)	
(15)		(40)	
(16)		(41)	
(17)		(42)	
(18)		(43)	
(19)		(44)	
(20)		(45)	
(21)		(46)	
(22)		(47)	
(23)		(48)	
(24)		(49)	
(25)		(50)	

10. Design pressure 115 psi. Temp. 100 °F. Hydro. test pressure 180 at 61 F (when applicable) at temp. °F

* Supplemental information in the form of lists, sketches, or drawings may be used provided (1) size is 8½ x 11, (2) information in items 2 and 3 on this Data Report is included on each sheet, (3) each sheet is numbered and the number of sheets is recorded at the top of this form.

FORM N-2 (Back — Pg 2 of 2)

Certificate Holder's Serial Nos. NPT32861-1 through NPT32861-6

CERTIFICATION OF DESIGN

Design specifications certified by N/A (when applicable) P.E. State _____ Reg. no. _____

Design report* certified by N/A (when applicable) P.E. State _____ Reg. no. _____

CERTIFICATE OF COMPLIANCE

We certify that the statements made in this report are correct and that this (these) Part (Pump Column) *conforms to the rules of construction of the ASME Code, Section III, Division 1.*

NPT Certificate of Authorization No. N-2928 Expires June 21, 2008

Date 1/15/07 Name Energy Steel & Supply Co. (NPT Certificate Holder) Signed [signature] (authorized representative)

CERTIFICATE OF INSPECTION

I, the undersigned, holding a valid commission issued by the National Board of Boiler and Pressure Vessel Inspectors and the State or Province of Michigan and employed by HSB CT of Hartford, CT have inspected these items described in this Data Report on Jan. 12, 2007, and state that to the best of my knowledge and belief, the Certificate Holder has fabricated these parts or appurtenances in accordance with the ASME Code, Section III, *Division 1. Each part listed has been authorized for stamping on the date shown above.*

By signing this certificate, neither the inspector nor his employer makes any warranty, expressed or implied, concerning the equipment described in this Data Report. Furthermore, neither the inspector nor his employer shall be liable in any manner for any personal injury or property damage or loss of any kind arising from or connected with this inspection.

Date Jan. 15, 2007 Signed [signature] (Authorized Nuclear Inspector) Commissions MI610 [Nat'l. Bd. (incl. endorsements) and state or prov. and no.]

PLAN NO. 2-2113

Philip Sims 3/24/08

FORM N-2 CERTIFICATE HOLDERS' DATA REPORT FOR IDENTICAL NUCLEAR PARTS AND APPURTENANCES*

As Required by the Provisions of the ASME Code, Section III
Not to Exceed One Day's Production

1. Manufactured and certified by Energy Steel & Supply Co., 2715 Paldan Drive, Auburn Hills, MI 48326 (name and address of NPT Certificate Holder)
2. Manufactured for Flowserve Pump Corporation, 2300 East Vernon Ave., Vernon, CA 90058 (name and address of purchaser)
3. Location of installation Columbia Nuclear Generating Station, Richland, Washington (name and address)
4. Type

C16973 Rev. B	SA516 Gr70 / SA106 Gr B	70ksi/60ksi	N/A	2006
(drawing no.)	(mat'l. spec. no.)	(tensile strength)	(CRN)	(year built)

5. ASME Code, Section III, Division 1:

2001	2003	ND Class 3	N/A
(edition)	(addenda date)	(class)	(Code Case no.)

6. Fabricated in accordance with Const. Spec. (Div. 2 only) _____ (no.) Revision _____ Date _____
7. Remarks: Flowserve PO No. RLLA16197, Item No. RLCA0369110334229, Column, Upper
8. Nom. thickness (in.) .5 Min. design thickness (in.) N/A Dia. ID (ft & in.) 0ft7.625in Length overall (ft & in.) 2ft6.875in
9. When applicable, Certificate Holders' Data Reports are attached for each item of this report:

Part or Appurtenance Serial Number	National Board No. in Numerical Order	Part or Appurtenance Serial Number	National Board No. in Numerical Order
(1) NPT32860-1	N/A	(26)	
(2)		(27)	
(3)		(28)	
(4)		(29)	
(5) HPCS-P-2, S/N 06RLCA		(30) 0369101001	
(6)		(31)	
(7)		(32)	
(8)		(33)	
(9)		(34)	
(10)		(35)	
(11)		(36)	
(12)		(37)	
(13)		(38)	
(14)		(39)	
(15)		(40)	
(16)		(41)	
(17)		(42)	
(18)		(43)	
(19)		(44)	
(20)		(45)	
(21)		(46)	
(22)		(47)	
(23)		(48)	
(24)		(49)	
(25)		(50)	

10. Design pressure 115 psi. Temp. 100 °F. Hydro. test pressure 130 at 61 F (when applicable) at temp. °F

* Supplemental information in the form of lists, sketches, or drawings may be used provided (1) size is 8½ x 11, (2) information in items 2 and 3 on this Data Report is included on each sheet, (3) each sheet is numbered and the number of sheets is recorded at the top of this form.

FORM N-2 (Back — Pg 2 of 2)

Certificate Holder's Serial Nos. NPT32860-1 through NPT32860-1

CERTIFICATION OF DESIGN

Design specifications certified by N/A (when applicable) P.E. State _____ Reg. no. _____

Design report* certified by N/A (when applicable) P.E. State _____ Reg. no. _____

CERTIFICATE OF COMPLIANCE

We certify that the statements made in this report are correct and that this (these) Part (Pump Column) conforms to the rules of construction of the ASME Code, Section III, Division 1.

NPT Certificate of Authorization No. N-2928 Expires June 21, 2008

Date 1/15/07 Name Energy Steel & Supply Co. (NPT Certificate Holder) Signed [signature] (authorized representative)

CERTIFICATE OF INSPECTION

I, the undersigned, holding a valid commission issued by the National Board of Boiler and Pressure Vessel Inspectors and the State or Province of Michigan and employed by HSB CT of Hartford, CT have inspected these items described in this Data Report on Jan. 12, 2007, and state that to the best of my knowledge and belief, the Certificate Holder has fabricated these parts or appurtenances in accordance with the ASME Code, Section III, Division 1. Each part listed has been authorized for stamping on the date shown above.

By signing this certificate, neither the inspector nor his employer makes any warranty, expressed or implied, concerning the equipment described in this Data Report. Furthermore, neither the inspector nor his employer shall be liable in any manner for any personal injury or property damage or loss of any kind arising from or connected with this inspection.

Date Jan. 15, 2007 Signed [signature] (Authorized Nuclear Inspector) Commissions MI610 [Nat'l. Bd. (incl. endorsements) and state or prov. and no.]

PLAN No. 2-2113

Philip Singh 3/24/08

FORM N-2 CERTIFICATE HOLDERS' DATA REPORT FOR IDENTICAL NUCLEAR PARTS AND APPURTENANCES*

As Required by the Provisions of the ASME Code, Section III
Not to Exceed One Day's Production

1. *Manufactured and certified by* Energy Steel & Supply Co., 2715 Paldan Drive, Auburn Hills, MI 48326
(name and address of NPT Certificate Holder)

2. Manufactured for Flowserve Pump Corporation, 2300 East Vernon Ave., Vernon, CA 90058
(name and address of purchaser)

3. Location of installation Columbia Nuclear Generating Station, Richland, Washington
(name and address)

4. Type

C16979 Rev. B	SA-516 Gr 70	70 ksi	N/A	2006
(drawing no.)	(mat'l. spec. no.)	(tensile strength)	(CRN)	(year built)

5. ASME Code, Section III, Division 1:

2001	2003	ND Class 3	N/A
(edition)	(addenda date)	(class)	(Code Case no.)

6. Fabricated in accordance with Const. Spec. (Div. 2 only) _____ (no.) Revision _____ Date _____

7. Remarks: Flowserve PO No. RLLA16402, Item No. RLCA0369110334232, Retainer, Bearing

8. Nom. thickness (in.) 2 in Min. design thickness (in.) N/A Dia. ID (ft & in.) 0ft7.63in Length overall (ft & in.) 0ft3.5in

9. When applicable, Certificate Holders' Data Reports are attached for each item of this report:

Part or Appurtenance Serial Number	National Board No. in Numerical Order	Part or Appurtenance Serial Number	National Board No. in Numerical Order
(1) NPT32939-1	N/A	(26)	
(2) NPT32939-2	N/A	(27)	
(3) NPT32939-3	N/A	(28)	
(4) NPT32939-4	N/A	(29)	
(5)		(30)	
(6)		(31)	
(7)		(32)	
(8) HPCS-P-2, S/N 06 RLCA0369101001		(33)	
(9)		(34)	
(10)		(35)	
(11)		(36)	
(12)		(37)	
(13)		(38)	
(14)		(39)	
(15)		(40)	
(16)		(41)	
(17)		(42)	
(18)		(43)	
(19)		(44)	
(20)		(45)	
(21)		(46)	
(22)		(47)	
(23)		(48)	
(24)		(49)	
(25)		(50)	

10. Design pressure 115 psi. Temp. 100 °F. Hydro. test pressure 180 at 61 F (when applicable) at temp. °F

* Supplemental information in the form of lists, sketches, or drawings may be used provided (1) size is 8½ x 11, (2) information in items 2 and 3 on this Data Report is included on each sheet, (3) each sheet is numbered and the number of sheets is recorded at the top of this form.

(7-98) *This form (E00040) may be obtained from the Order Dept., ASME, 22 Law Drive, Box 2300, Fairfield, NJ 07007-2300.*

Certificate Holder's Serial Nos. NPT32939-1 through NPT32939-4

CERTIFICATION OF DESIGN

Design specifications certified by N/A (when applicable) P.E. State _____ Reg. no. _____

Design report* certified by N/A (when applicable) P.E. State _____ Reg. no. _____

CERTIFICATE OF COMPLIANCE

We certify that the statements made in this report are correct and that this (these) Parts conforms to the rules of construction of the ASME Code, Section III, Division 1.

NPT Certificate of Authorization No. N-2928 Expires June 21, 2008

Date 1/15/07 Name Energy Steel & Supply Co. (NPT Certificate Holder) Signed [signature] (authorized representative)

CERTIFICATE OF INSPECTION

I, the undersigned, holding a valid commission issued by the National Board of Boiler and Pressure Vessel Inspectors and the State or Province of Michigan and employed by HSB CT of Hartford, CT have inspected these items described in this Data Report on Jan. 12, 2007, and state that to the best of my knowledge and belief, the Certificate Holder has fabricated these parts or appurtenances in accordance with the ASME Code, Section III, Division 1. Each part listed has been authorized for stamping on the date shown above.

By signing this certificate, neither the inspector nor his employer makes any warranty, expressed or implied, concerning the equipment described in this Data Report. Furthermore, neither the inspector nor his employer shall be liable in any manner for any personal injury or property damage or loss of any kind arising from or connected with this inspection.

Date Jan. 15, 2007 Signed [signature] (Authorized Nuclear Inspector) Commissions MI610 [Nat'l. Bd. (incl. endorsements) and state or prov. and no.]

PLAN No. 2-2113

Philip Sims 3/24/08

FORM N-2 CERTIFICATE HOLDERS' DATA REPORT FOR IDENTICAL NUCLEAR PARTS AND APPURTENANCES*

As Required by the Provisions of the ASME Code, Section III
Not to Exceed One Day's Production

1. Manufactured and certified by Energy Steel & Supply Co., 2715 Paldan Drive, Auburn Hills, MI 48326 (name and address of NPT Certificate Holder)
2. Manufactured for Flowserve Pump Corporation, 2300 East Vernon Ave., Vernon, CA 90058 (name and address of purchaser)
3. Location of installation Columbia Nuclear Generating Station, Richland, Washington (name and address)
4. Type

C16981 Rev. B	SA-516 Gr 70	70 ksi	N/A	2006
(drawing no.)	(mat'l. spec. no.)	(tensile strength)	(CRN)	(year built)

5. ASME Code, Section III, Division 1:

2001	2003	ND Class 3	N/A
(edition)	(addenda date)	(class)	(Code Case no.)

6. Fabricated in accordance with Const. Spec. (Div. 2 only) _____ (no.) Revision _____ Date _____
7. Remarks: Flowserve PO No. RLLA16402, Item No. RLCA0369110334233, Retainer, Bearing-With Lugs
8. Nom. thickness (in.) 2 in Min. design thickness (in.) N/A Dia. ID (ft & in.) 0ft7.63in Length overall (ft & in.) 0ft3.5in
9. When applicable, Certificate Holders' Data Reports are attached for each item of this report:

Part or Appurtenance Serial Number	National Board No. in Numerical Order	Part or Appurtenance Serial Number	National Board No. in Numerical Order
(1) NPT32940-1	N/A	(26)	
(2) NPT32940-2	N/A	(27)	
(3) NPT32940-3	N/A	(28)	
(4)		(29)	
(5)		(30)	
(6)		(31)	
(7)		(32)	
(8) HPLS-P-2, S/N 06RLCA0369101001		(33)	
(9)		(34)	
(10)		(35)	
(11)		(36)	
(12)		(37)	
(13)		(38)	
(14)		(39)	
(15)		(40)	
(16)		(41)	
(17)		(42)	
(18)		(43)	
(19)		(44)	
(20)		(45)	
(21)		(46)	
(22)		(47)	
(23)		(48)	
(24)		(49)	
(25)		(50)	

10. Design pressure 115 psi. Temp. 100 °F. Hydro. test pressure 180 at 61 F (when applicable) at temp. °F

* Supplemental information in the form of lists, sketches, or drawings may be used provided (1) size is 8½ x 11, (2) information in items 2 and 3 on this Data Report is included on each sheet, (3) each sheet is numbered and the number of sheets is recorded at the top of this form.

FORM N-2 (Back — Pg 2 of 2)

Certificate Holder's Serial Nos. NPT32940-1 through NPT32940-3

CERTIFICATION OF DESIGN

Design specifications certified by N/A (when applicable) P.E. State _____ Reg. no. _____

Design report* certified by N/A (when applicable) P.E. State _____ Reg. no. _____

CERTIFICATE OF COMPLIANCE

We certify that the statements made in this report are correct and that this (these) Parts conforms to the rules of construction of the ASME Code, Section III, Division 1.

NPT Certificate of Authorization No. N-2928 Expires June 21, 2008

Date 1/15/07 Name Energy Steel & Supply Co. (NPT Certificate Holder) Signed [signature] (authorized representative)

CERTIFICATE OF INSPECTION

I, the undersigned, holding a valid commission issued by the National Board of Boiler and Pressure Vessel Inspectors and the State or Province of Michigan and employed by HSB CT of Hartford, CT have inspected these items described in this Data Report on Jan. 12, 2007, and state that to the best of my knowledge and belief, the Certificate Holder has fabricated these parts or appurtenances in accordance with the ASME Code, Section III, Division 1. Each part listed has been authorized for stamping on the date shown above.

By signing this certificate, neither the inspector nor his employer makes any warranty, expressed or implied, concerning the equipment described in this Data Report. Furthermore, neither the inspector nor his employer shall be liable in any manner for any personal injury or property damage or loss of any kind arising from or connected with this inspection.

Date Jan. 15, 2007 Signed [signature] (Authorized Nuclear Inspector) Commissions MI610 [Nat'l. Bd. (incl. endorsements) and state or prov. and no.]

PLAN No 2-2118

ENERGY NORTHWEST
People · Vision · Solutions

FORM NIS-2 OWNER'S REPORT FOR REPAIR/REPLACEMENT ACTIVITY
As Required By The Provisions Of The ASME Code Section XI

Date: 03/22/2008
Sheet: 1 Of 1
Unit: Not Applicable

1. Owner: Energy Northwest
Address: Columbia Generating Station, North Power Plant Loop, Richland, Washington, 99352
2. Plant: Columbia Generating Station
Address: Columbia Generating Station, North Power Plant Loop, Richland, Washington, 99352
3. (a) Work Performed By: Energy Northwest
(b) Repair/Replacement Organization P.O. No, Job No, etc.: Energy Northwest
(c) Type Code Symbol Stamp: Not Applicable
(d) Certificate Of Authorization No.: Not Applicable
(e) Expiration Date: Not Applicable
4. Identification Of System: Service Water (SW) System
5. (a) Applicable Construction Code: ASME Section III, Code Class 3, 1971 Edition with Winter 1973 Addenda, Code Case: Note 1
(b) Applicable Edition Of ASME Section XI Used For Repair/Replacement Activity: 2001 Edition with 2003 Addenda
(c) Applicable ASME Section XI Case(s): None
6. Identification Of Components

Name Of Component	Name Of Manufacturer	Manufacturer's Serial No	National Board No	Other I.D.	Year Built	Corrected, Removed Or Installed	ASME Code Stamped (Yes Or No) Code Class
SW(2)-2	WPPSS*	SW(2)-2-P1	N/A	N/A	1983	See Item 7 Below	Yes, Code Class 3
CCH-RV-2B	Crosby	N63032-00-0045	N/A	N/A	1980	Removed	Yes, Code Class 3
CCH-RV-2B	Crosby	N63032-00-0059	N/A	N/A	1995	Installed	Yes, Code Class 3

7. Description Of Work Performed: Replaced existing relief valve CCH-RV-2B. The replacement work was performed as follows:
1) Removed existing relief valve CCH-RV-2B, Serial No N63032-00-0045.
2) Installed replacement relief valve CCH-RV-2B, Serial No N63032-00-0059.
3) Installed four (4) replacement studs for the relief valve inlet joint.
4) Installed eight (8) replacement nuts for the relief valve inlet joint.
5) Installed four (4) replacement studs for the relief valve outlet joint.
6) Installed eight (8) replacement nuts for the relief valve outlet joint.

NOTES -
1) The applicable ASME Code Cases, if any are listed on the ASME Code Data Reports.
2) * Company name changed from Washington Public Power Supply System (WPPSS) to Energy Northwest in 1999.
3) The existing ASME Code Stamped piping system in which the replacement valve CCH-RV-2B, Serial No N63032-00-0059 was installed is Service Water (SW) piping system SW(2)-2-P1. This piping system is certified to comply with ASME Section III, Code Class 3, 1971 Edition with Winter 1973 Addenda requirements.
4) The replacement valve CCH-RV-2B, Serial No N63032-00-0059 is certified to comply with ASME Section III, Code Class 3, 1977 Edition with Summer 1977 Addenda requirements.

PLAN No 2-2118

ENERGY NORTHWEST
People · Vision · Solutions

FORM NIS-2 OWNER'S REPORT FOR REPAIR/REPLACEMENT ACTIVITY (Back)

8 Tests Conducted: Hydrostatic [ ] Pneumatic [ ] Nominal Operating Pressure [ ] Other [ ]
Exempt [X] Test Pressure: Psig Test Temperature: °F

9. Remarks (Applicable Manufacturer's Data Reports to be attached): See attached NV-1 Code Data Report for the replacement valve CCH-RV-2B, Serial No N63032-02-0059.

CERTIFICATE OF COMPLIANCE

I certify that the statements made in this Owner's Report are correct and that this conforms to the requirements of the ASME Code, Section XI.
Type Code Symbol Stamp: Not Applicable
Certificate Of Authorization No.: Not Applicable
Expiration Date: Not Applicable

Prepared By Kuldip Singh - Program Lead Engineer (PLE) **Signed By** Kuldip Singh - Program Lead Engineer (PLE)

Date 3/22/08 **Date** 3/22/08

CERTIFICATE OF INSERVICE INSPECTION

I, the undersigned, holding a valid commission issued by the National Board of Boiler and Pressure Vessel Inspectors and the State of Washington *and employed by* Hartford Steam Boiler Of Connecticut of Hartford, Connecticut *have inspected the components described in this Owner's Report during the period* 03/15/07 *to* 03/31/08 *and state to the best of my knowledge and belief, the Owner has performed examinations and taken corrective measures described in this Owner's Report in accordance with the requirements of the ASME Code, Section XI.*
By signing this certificate neither the Inspector nor his employer makes any warranty, expressed or implied, concerning the examinations and corrective measures described in this Owner's Report. Furthermore, neither the Inspector nor his employer shall be liable in any manner for any personal injury or property damage or a loss of any kind arising from or connected with this inspection.

Inspector's Signature **Commissions** 13172 W, A, N, I
National Board, State, and Endorsements

Date 03/31/08

PLAN No. 2.2118
[illegible] 3/22/09

CROSBY

CROSBY VALVE & GAGE COMPANY
WRENTHAM, MA

Q.C.-44D-1A
SHEET 1 OF 2

FORM NV-1, N CERTIFICATE HOLDERS' DATA REPORT FOR SAFETY AND SAFETY RELIEF VALVES
As Required by the Provisions of the ASME Code, Section III, Division 1

1. Manufactured by Crosby Valve & Gage Company 43 Kendrick St. Wrentham, MA 02093
(Name and Address of N Certificate Holder)
Crosby Factory Order No. NV5000273 Customer Order No. 243528

2. Manufactured for WASHINGTON PUBLIC POWER SUPPLY RICHLAND,WA 99352
(Name and Address of Purchaser or Owner)

3. Location of Installation NORTH POWER PLANT LOOP RICHLAND,WA 99352
(Name and Address)

4. -- (CRN) DS-C-B63032 REV.B (Drawing No.) -- (Nat'l Brd. No.) 1995 (Year Built)

5. Valve JMB-WR (Model No., Series No.) Identifying Nos. N63032-00-0059 (N Certificate Holder's Serial No.)
Type RELIEF Valve I.D./Tag No. SPARE
Orifice Size 0.327 Inch Nominal Inlet Size 3/4 Inch Outlet Size 1 Inch

6. Set Pressure 150 105 F
Rated Relieving Temperature
Stamped Capacity 18 GPM WTR @70 DEG. @ 10 % Overpressure — Blowdown (psig) 10 % OF SP
Hydrostatic Test (psig) Inlet 225 Outlet 100
(Applicable to Valves for Closed Systems Only)

PRESSURE RETAINING PIECES CCH-RV-2B, S/N N63032-00-0059.

	Serial No. Identification	Material Specification Including Type or Grade
a. Castings		
Body	---	---
Bonnet	---	---
b. Bar Stock & Forgings		
Nozzle	---	---
Disc	N93001-38-0180	ASME SA479 T316
Spring Washers	N91098-40-4503 N91098-40-4504	ASME SA479 T410
Adjusting Bolt	N92379-69-0621	ASME SA193 GR.B6
Spindle	N90221-47-0880	ASME SA193 GR.B6
c. Spring	NX2797-1001	ASTM A229 CL.1
d. Bolting	---	---
e. Other Pieces		
BASE	N92799-40-0110	ASME SA479 T316
CYLINDER	N93004-35-0092	ASME SA216 GR.WCB

CERTIFICATE OF COMPLIANCE

We certify that the statements made in this report are correct and that this valve conforms to the rules of construction of the ASME Code for Nuclear Power Plant Components, Section III, Div. 1 1977 Edition, (Date)
Addenda SUMMER 1977, Code Case No.-_____.
(Date)

Class 3

Date 2 May 95 Signed Crosby Valve & Gage Company by Lawrence H Pines
(N Certificate Holder)

Our ASME Certificate of Authorization No. 1878 to use the NV symbol expires 30 SEP 95.
(Date)

CERTIFICATE OF DESIGN

Design information on file at Crosby Valve & Gage Company
Stress analysis report (Class 1 only) on file at ---

Design specifications certified by* VENKATACHALAN MANI
PE State WA Reg No. 15065
Stress Report Certified by* ---
PE State --- Reg No. ---

*Signature not required - list name only.

CERTIFICATE OF SHOP INSPECTION

I, the undersigned, holding a valid commission issued by the National Board of Boiler and Pressure Vessel Inspectors and the State or Province of Massachusetts and employed by * Arkwright Mutual Insurance Co. of Norwood, Massachusetts have inspected the pump, or valve, described in this Data Report on May 2, 1995 and state that to the best of my knowledge and belief, the N Certificate Holder has constructed this pump, or valve, in accordance with the ASME Code for Nuclear Power Plant Components.

By signing this certificate, neither the Inspector nor his employer makes any warrant, expressed or implied, concerning the equipment described in this Data Report. Furthermore, neither the Inspector nor his employer shall be liable in any manner for any personal injury or property damage or a loss of any kind arising from or connected with this inspection.

Factory Mutual Systems

Date 5/2, 1995.

Signed [signature]
(Inspector)

Commissions MA1455
(Nat'l. Bd., State, Prov. and No.)

*Factory Mutual System

PLAN No 2-2127

ENERGY NORTHWEST
People·Vision·Solutions

FORM NIS-2 OWNER'S REPORT FOR REPAIR/REPLACEMENT ACTIVITY
As Required By The Provisions Of The ASME Code Section XI

1. Owner: Energy Northwest
Address: Columbia Generating Station, North Power Plant Loop, Richland, Washington, 99352
2. Plant: Columbia Generating Station
Address: Columbia Generating Station, North Power Plant Loop, Richland, Washington, 99352

Date: 07/20/2009
Sheet: 1 Of 1
Unit: Not Applicable

3. (a) Work Performed By: Energy Northwest
(b) Repair/Replacement Organization P.O. No, Job No, etc.: Energy Northwest
(c) Type Code Symbol Stamp: Not Applicable
(d) Certificate Of Authorization No.: Not Applicable
(e) Expiration Date: Not Applicable
4. Identification Of System: Residual Heat Removal (RHR) System
5. (a) Applicable Construction Code: ASME Section III, Code Class 1, 1971 Edition with Winter 1973 Addenda, Code Case: Note 1
(b) Applicable Edition Of ASME Section XI Used For Repair/Replacement Activity: 2001 Edition with 2003 Addenda
(c) Applicable ASME Section XI Code Case(s): None
6. Identification Of Components

Name Of Component	Name Of Manufacturer	Manufacturer's Serial No	National Board No	Other I.D.	Year Built	Corrected, Removed Or Installed	ASME Code Stamped (Yes Or No) Code Class
RHR(1)-4A1	WPPSS*	RHR(1)-4A1-P1	N/A	N/A	1983	See Item 7 Below	Yes, Code Class 1
RHR-V-604	Borg Warner	28745	N/A	N/A	1978	Removed	Yes, Code Class 1
RHR-V-604	Flowserve	25AYY	N/A	N/A	2004	Installed	Yes, Code Class 1
RHR-V-605	Borg Warner	28730	N/A	N/A	1978	Removed	Yes, Code Class 1
RHR-V-605	Flowserve	28AYY	N/A	N/A	2004	Installed	Yes, Code Class 1

7. Description Of Work: Replaced existing valve RHR-V-604 and valve RHR-V-605. The replacement work was performed as follows:
1) Removed existing valve RHR-V-604, Serial No 28730.
2) Removed existing valve RHR-V-605, Serial No 28745.
3) Cut/ground existing socket welds.
4) Performed liquid penetrant (PT) examination on the prepped surfaces. Liquid penetrant (PT) examination results acceptable.
5) Installed replacement pipe.
6) Installed replacement valve RHR-V-604, Serial No 25AYY.
7) Installed replacement valve RHR-V-605, Serial No 28AYY.
8) Made required socket welds.
9) Performed visual examination on the final socket welds. Visual examination results acceptable.
10) Performed liquid penetrant (PT) examination on the final socket welds. Liquid penetrant (PT) examination results acceptable.

NOTES -
1) The applicable ASME Code Cases, if any are listed on the ASME Code Data Reports.
2) * Company name changed from Washington Public Power Supply System (WPPSS) to Energy Northwest (EN) in 1999.
3) The existing ASME Code Stamped piping system in which the replacement valve RHR-V-604, Serial No 25AYY and valve RHR-V-605, Serial No 28AYY were installed is Residual Heat Removal (RHR) piping system RHR(1)-4A1-P1. This piping system is certified to comply with ASME Section III, Code Class 1, 1971 Edition with Winter 1973 Addenda requirements.
4) The replacement valve RHR-V-604, Serial No 25AYY and valve RHR-V-605, Serial No 28AYY is certified to comply with ASME Section III, Code Class 1 and Code Editions and Code Addendas requirements listed as follows:
ASME Section III, Code Class 1, 1971 Edition with Winter 1973 Addenda requirements.
ASME Section III, Code Class 1, 1974 Edition with Summer 1975 Addenda requirements.
ASME Section III, Code Class 1, 1974 Edition with Winter 1975 Addenda requirements.
ASME Section III, Code Class 1, 1977 Edition with Summer 1977 Addenda requirements.
5) OEM/OES Borg Warner valves are now being manufactured by OEM/OES Flowserve.

PLAN No 2-2127

ENERGY NORTHWEST
People·Vision·Solutions

FORM NIS-2 OWNER'S REPORT FOR REPAIR/REPLACEMENT ACTIVITY (Back)

8 Tests Conducted: Hydrostatic [ ] **Pneumatic** [ ] **Nominal Operating Pressure** [ ] **Other** [ ]
Exempt [X] **Test Pressure:** Psig **Test Temperature:** °F

9. Remarks (Applicable Manufacturer's Data Reports to be attached): See attached NPV-1 Code Data Reports for the following replacement valves:

EPN No	Serial No
RHR-V-604	25AYY
RHR-V-605	28AYY

CERTIFICATE OF COMPLIANCE

I certify that the statements made in this Owner's Report are correct and that this conforms to the requirements of the ASME Code, Section XI.
Type Code Symbol Stamp: Not Applicable
Certificate Of Authorization No.: Not Applicable
Expiration Date: Not Applicable

Prepared By Kuldip Singh - Program Lead Engineer (PLE) **Signed By** Kuldip Singh - Program Lead Engineer (PLE)

Date 7/20/09 **Date** 7/20/09

CERTIFICATE OF INSERVICE INSPECTION

I, the undersigned, holding a valid commission issued by the National Board of Boiler and Pressure Vessel Inspectors and the State of _____ and employed by _____ of _____ have inspected the components described in this Owner's Report during the period _____ to _____ and state to the best of my knowledge and belief, the Owner has performed examinations and taken corrective measures described in this Owner's Report in accordance with the requirements of the ASME Code, Section XI.
By signing this certificate neither the Inspector nor his employer makes any warranty, expressed or implied, concerning the examinations and corrective measures described in this Owner's Report. Furthermore, neither the Inspector nor his employer shall be liable in any manner for any personal injury or property damage or a loss of any kind arising from or connected with this inspection.

N/R - Repair/Replacement 1" NPS And Smaller (Small Items) **Commissions** _____
Inspector's Signature National Board, State, and Endorsements

Date _____

PLAN NO. 2-2127

FORM NPV-1 N CERTIFICATE HOLDERS' DATA REPORT FOR NUCLEAR PUMPS OR VALVES*

As Required by the Provisions of the ASME Code, Section III, Div. 1

1. Manufactured by Flowserve Corporation, 1900 S. Saunders St., Raleigh, NC 27603 7/20/09.
(Name and Address of N Certificate Holder)

2. Manufactured for Energy Northwest PO Box 968 Richland, WA 99352-0968
(Name and Address of Purchaser or Owner)

3. Location of Installation Columbia Generating Station, Snake River Warehouse, North Power Plant Loop Richland, WA 99352-0968
(Name and Address)

4. Pump or Valve Valve Nominal Inlet Size 3/4" (inch) Outlet Size 3/4" (inch)

	(a) Model No. Series No. or Type	(b) N Certificate Holder's Serial No.	(c) Canadian Registration No.	(d) Drawing No.	(e) Class	(f) Nat'l. Bd. No.	(g) Year Built
(1)	1500#	23AYY	N/A	76590 Rev. S	1	N/A	2004
(2)	1500#	24AYY	N/A	76590 Rev. S	1	N/A	2004
(3)	1500#	25AYY	N/A	76590 Rev. S	1	N/A	2004
(4)	1500#	26AYY	N/A	76590 Rev. S	1	N/A	2004
(5)	1500#	27AYY	N/A	76590 Rev. S	1	N/A	2004
(6)	1500#	28AYY	N/A	76590 Rev. S	1	N/A	2004
(7)	1500#	29AYY	N/A	76590 Rev. S	1	N/A	2004
(8)							
(9)							
(10)	RHR-V-604, S/N 25AYY						

5. 3/4" 1500# Y-GLOBE
(Brief description of service for which equipment was designed)

*valve also meets ASME Sec. III 1971 Ed.Winter 1973 Add. Cl. 1, ASME Sec. III 1974 Ed. Summer 1975 Add. Cl. 1, ASME Sec. III 1974 Ed. Winter 1975 Add. Cl. 1 25826

6. Design Conditions 1650 (Pressure) psi 575 (Temperature) °F or Valve Pressure Class 1500 (1)

7. Cold Working Pressure 3600 psi at 100 °F.

8. Pressure Retaining Pieces

Mark No.	Material Spec. No.	Manufacturer	Remarks
(a) Castings			
M8108	AMS 5387	Tech Cast	Disc
(b) Forgings			
79932	SA105	Larson	Body
1G6158	SA564-630-H1100	Nova	Backseat

(1) For manually operated valves only

*Supplemental sheets in form of lists, sketches or drawings may be used provided (1) size is 8-1/2" x 11", (2) information in Items 1, 2 and 5 on this Data Report is included on each sheet, and (3) each sheet is numbered and number of sheets is recorded at top of this form.

3

Valve S/N 23AYY through 29AYY

Mark No.	Material Spec. No.	Manufacturer	Remarks
(c) Bolting			
(d) Other Parts			

9. Hydrostatic test 5400 psi. Disk Differential test pressure 3960 psi.

CERTIFICATE OF COMPLIANCE

We certify that the statements made in this report are correct and that this pump, or valve, conforms to the rules of construction of the ASME Code for Nuclear Power Plant Components. Section III, Div. 1., Edition 1977*

Addenda Summer 1977*, Code Case No. N/A, Date 7/2/04

Signed Flowserve (N Certificate Holder) by [signature]

Our ASME Certificate of Authorization No. N-1562 to use the N (N) symbol expires 11-26-06 (Date)

CERTIFICATION OF DESIGN

Design information on file at Flowserve Corporation Raleigh, NC

Stress analysis report (Class 1 only) on file at Flowserve Corporation Raleigh, NC

Design specifications certified by (1) R.L. Schlosser / J.R. Cole

PE State WA Reg. No. 21701 / 20653

Stress analysis certified by (1) Ron Farrell

PE State NC Reg. No. 028656

(1) Signature not required. List name only.

CERTIFICATE OF SHOP INSPECTION

I, the undersigned, holding a valid commission issued by the National Board of Boiler and Pressure Vessel Inspectors and the State or Province of North Carolina and employed by HSB CT of Hartford Connecticut have inspected the pump, or valve, described in this Data Report on 7/2/04, and state that, to the best of my knowledge and belief, the N Certificate Holder has constructed this pump, or valve, in accordance with ASME Code, Section III.

By signing this certificate neither the Inspector nor his employer makes any warranty, expressed or implied, concerning the equipment described in this s Data Report. Furthermore, neither the Inspector nor his employer shall be liable in any manner for any personal injury or property damage or a loss of any kind arising from or connected with this Inspection.

Date 7/2/04

Signed [signature] (Inspector) Commissions NC 1424 (Nat'l Bd., State, Prov and No.)

4

PLAN NO. 2-2127

FORM NPV-1 N CERTIFICATE HOLDERS' DATA REPORT FOR NUCLEAR PUMPS OR VALVES*

As Required by the Provisions of the ASME Code, Section III, Div. 1

1. Manufactured by Flowserve Corporation, 1900 S. Saunders St., Raleigh, NC 27603
(Name and Address of N Certificate Holder)

7/20/05.

2. Manufactured for Energy Northwest PO Box 968 Richland, WA 99352-0968
(Name and Address of Purchaser or Owner)

3. Location of Installation Columbia Generating Station, Snake River Warehouse, North Power Plant Loop Richland, WA 99352-0968
(Name and Address)

4. Pump or Valve Valve Nominal Inlet Size 3/4" (inch) Outlet Size 3/4" (inch)

	(a) Model No. Series No. or Type	(b) N Certificate Holder's Serial No.	(c) Canadian Registration No.	(d) Drawing No.	(e) Class	(f) Nat'l. Bd. No.	(g) Year Built
(1)	1500#	23AYY	N/A	76590 Rev. S	1	N/A	2004
(2)	1500#	24AYY	N/A	76590 Rev. S	1	N/A	2004
(3)	1500#	25AYY	N/A	76590 Rev. S	1	N/A	2004
(4)	1500#	26AYY	N/A	76590 Rev. S	1	N/A	2004
(5)	1500#	27AYY	N/A	76590 Rev. S	1	N/A	2004
(6)	1500#	28AYY	N/A	76590 Rev. S	1	N/A	2004
(7)	1500#	29AYY	N/A	76590 Rev. S	1	N/A	2004
(8)							
(9)	RHR. V-605, S/N 28AYY						
(10)							

5. 3/4" 1500# Y-GLOBE
(Brief description of service for which equipment was designed)

*valve also meets ASME Sec. III 1971 Ed.Winter 1973 Add. Cl. 1, ASME Sec. III 1974 Ed. Summer 1975 Add. Cl. 1, ASME Sec. III 1974 Ed. Winter 1975 Add. Cl. 1 25826

6. Design Conditions 1650 (Pressure) psi 575 (Temperature) °F or Valve Pressure Class 1500 (1)

7. Cold Working Pressure 3600 psi at 100 °F.

8. Pressure Retaining Pieces

Mark No.	Material Spec. No.	Manufacturer	Remarks
(a) Castings			
M8108	AMS 5387	Tech Cast	Disc
(b) Forgings			
79932	SA105	Larson	Body
1G6158	SA564-630-H1100	Nova	Backseat

(1) For manually operated valves only

*Supplemental sheets in form of lists, sketches or drawings may be used provided (1) size is 8-1/2" x 11", (2) information in items 1, 2 and 5 on this Data Report is included on each sheet, and (3) each sheet is numbered and number of sheets is recorded at top of this form.

3

Valve S/N 23AYY through 29AYY

Mark No.	Material Spec. No.	Manufacturer	Remarks
(c) Bolting			
(d) Other Parts			

9. Hydrostatic test 5400 psi. Disk Differential test pressure 3960 psi.

CERTIFICATE OF COMPLIANCE

We certify that the statements made in this report are correct and that this pump, or valve, conforms to the rules of construction of the ASME Code for Nuclear Power Plant Components. Section III, Div. 1., Edition 1977*

Addenda Summer 1977*, Code Case No. N/A, Date 7/2/04

Signed Flowserve (N Certificate Holder) by [signature]

Our ASME Certificate of Authorization No. N-1562 to use the N (N) symbol expires 11-26-06 (Date)

CERTIFICATION OF DESIGN

Design information on file at Flowserve Corporation Raleigh, NC

Stress analysis report (Class 1 only) on file at Flowserve Corporation Raleigh, NC

Design specifications certified by (1) R.L. Schlosser / J.R. Cole

PE State WA Reg. No. 21701 / 20653

Stress analysis certified by (1) Ron Farrell

PE State NC Reg. No. 028656

(1) Signature not required. List name only.

CERTIFICATE OF SHOP INSPECTION

I, the undersigned, holding a valid commission issued by the National Board of Boiler and Pressure Vessel Inspectors and the State or Province of North Carolina and employed by HSB CT of Hartford Connecticut have inspected the pump, or valve, described in this Data Report on 7/2/04, and state that, to the best of my knowledge and belief, the N Certificate Holder has constructed this pump, or valve, in accordance with ASME Code, Section III.

By signing this certificate neither the Inspector nor his employer makes any warranty, expressed or implied, concerning the equipment described in this s Data Report. Furthermore, neither the Inspector nor his employer shall be liable in any manner for any personal injury or property damage or a loss of any kind arising from or connected with this Inspection.

Date 7/2/04

Signed [signature] (Inspector) Commissions NC 1421 (Nat'l Bd., State, Prov. and No.)

4

PLAN No 2-2139

ENERGY NORTHWEST
People·Vision·Solutions

FORM NIS-2 OWNER'S REPORT FOR REPAIR/REPLACEMENT ACTIVITY
As Required By The Provisions Of The ASME Code Section XI

1. Owner: Energy Northwest
Address: Columbia Generating Station, North Power Plant Loop, Richland, Washington, 99352
2. Plant: Columbia Generating Station
Address: Columbia Generating Station, North Power Plant Loop, Richland, Washington, 99352

Date: 07/13/2009
Sheet: 1 Of 1
Unit: Not Applicable

3. (a) Work Performed By: Energy Northwest
(b) Repair/Replacement Organization P.O. No, Job No, etc.: Energy Northwest
(c) Type Code Symbol Stamp: Not Applicable
(d) Certificate Of Authorization No.: Not Applicable
(e) Expiration Date: Not Applicable
4. Identification Of System: Reactor Core Isolation Cooling (RCIC) System
5. (a) Applicable Construction Code: ASME Section III, Code Class 1, 1971 Edition with Winter 1973 Addenda, Code Case: Note 1
(b) Applicable Edition Of ASME Section XI Used For Repair/Replacement Activity: 2001 Edition with 2003 Addenda
(c) Applicable ASME Section XI Case(s): None
6. Identification Of Components

Name Of Component	Name Of Manufacturer	Manufacturer's Serial No	National Board No	Other I.D.	Year Built	Corrected, Removed Or Installed	ASME Code Stamped (Yes Or No) Code Class
RCIC-V-61	Borg Warner	17857	N/A	N/A	1977	See Item 7 Below	Yes, Code Class 1

7. Description Of Work Performed: Repaired valve RCIC-V-61. The repair work was performed as follows:

1) Cut valve body to bonnet seal weld.
2) Prepped valve body cut surfaces.
3) Performed liquid penetrant (PT) examination on the valve body prepped surfaces. Liquid penetrant (PT) examination results acceptable.
4) Prepped valve bonnet cut surfaces.
5) Performed liquid penetrant (PT) examination on the valve bonnet prepped surfaces. Liquid penetrant (PT) examination results acceptable.
6) Reinstalled the valve bonnet.
7) Made valve body to bonnet seal weld.
8) Performed visual examination on the final seal weld. Visual examination results acceptable.
9) Performed liquid penetrant (PT) examination on the final seal weld. Liquid penetrant (PT) examination results acceptable.
10) Performed VT-2 visual examination during pressure test to confirm pressure boundary integrity of the joint. No evidence of leakage during the pressure test.

NOTES

1) The applicable ASME Code Cases, if any are listed on the ASME Code Data Report.

PLAN No 2-2139

ENERGY NORTHWEST
People·Vision·Solutions

FORM NIS-2 OWNER'S REPORT FOR REPAIR/REPLACEMENT ACTIVITY (Back)

8 Tests Conducted: Hydrostatic [ ] **Pneumatic** [ ] **Nominal Operating Pressure** [X] **Other** [ ]
Exempt [ ] **Test Pressure:** 70 Psig **Test Temperature:** 77° F

9. Remarks (Applicable Manufacturer's Data Reports to be attached): None

CERTIFICATE OF COMPLIANCE

I certify that the statements made in this Owner's Report are correct and that this conforms to the requirements of the ASME Code, Section XI.
Type Code Symbol Stamp: Not Applicable
Certificate Of Authorization No.: Not Applicable
Expiration Date: Not Applicable

Prepared By Kuldip Singh - Program Lead Engineer (PLE) **Signed By** Kuldip Singh - Program Lead Engineer (PLE)

Date 7/13/09 **Date** 7/13/09

CERTIFICATE OF INSERVICE INSPECTION

I, the undersigned, holding a valid commission issued by the National Board of Boiler and Pressure Vessel Inspectors and the State of Washington *and employed by* Hartford Steam Boiler Of Connecticut of Hartford, Connecticut *have inspected the components described in this Owner's Report during the period* 9/15/2008 *to* 7/13/2009 *and state to the best of my knowledge and belief, the Owner has performed examinations and taken corrective measures described in this Owner's Report in accordance with the requirements of the ASME Code, Section XI.*
By signing this certificate neither the Inspector nor his employer makes any warranty, expressed or implied, concerning the examinations and corrective measures described in this Owner's Report. Furthermore, neither the Inspector nor his employer shall be liable in any manner for any personal injury or property damage or a loss of any kind arising from or connected with this inspection.

Inspector's Signature **Commissions** 13172 WANI
National Board, State, and Endorsements

Date 7/13/2009

PLAN No 2-2142

ENERGY NORTHWEST
People·Vision·Solutions

FORM NIS-2 OWNER'S REPORT FOR REPAIR/REPLACEMENT ACTIVITY
As Required By The Provisions Of The ASME Code Section XI

Date: 07/07/2009
Sheet: 1 Of 1
Unit: Not Applicable

1. Owner: Energy Northwest
Address: Columbia Generating Station, North Power Plant Loop, Richland, Washington, 99352
2. Plant: Columbia Generating Station
Address: Columbia Generating Station, North Power Plant Loop, Richland, Washington, 99352
3. (a) Work Performed By: Energy Northwest
(b) Repair/Replacement Organization P.O. No, Job No, etc.: Energy Northwest
(c) Type Code Symbol Stamp: Not Applicable
(d) Certificate Of Authorization No.: Not Applicable
(e) Expiration Date: Not Applicable
4. Identification Of System: Reactor Closed Cooling (RCC) System
5. (a) Applicable Construction Code: ASME Section III, Code Class 1, 1986 Edition with no Addenda, Code Case: Note 1
(b) Applicable Edition Of ASME Section XI Used For Repair/Replacement Activity: 2001 Edition with 2003 Addenda
(c) Applicable ASME Section XI Code Case(s): None
6. Identification Of Components

Name Of Component	Name Of Manufacturer	Manufacturer's Serial No	National Board No	Other I.D.	Year Built	Corrected, Removed Or Installed	ASME Code Stamped (Yes Or No) Code Class
RCC-V-219	Borg Warner	E337A-1-1	N/A	N/A	1998	Corrected (Repaired)	Yes, Code Class 1

7. Description Of Work: Repaired valve RCC-V-219. The repair work was performed as follows:
1) Cut/ground valve body to bonnet seal weld.
2) Prepped valve body cut/ground surfaces.
3) Performed liquid penetrant (PT) examination on the final valve body prepped surfaces. Liquid penetrant (PT) examination results acceptable.
4) Prepped valve bonnet cut/ground surfaces.
5) Performed liquid penetrant (PT) examination on the final valve bonnet prepped surfaces. Liquid penetrant (PT) examination results acceptable.
6) Reinstalled bonnet in the valve body.
7) Made required valve body to bonnet seal weld.
8) Performed visual examination on the final valve body to bonnet seal weld. Visual examination results acceptable.
9) Performed liquid penetrant (PT) examination on the final valve body to bonnet seal weld. Liquid penetrant (PT) examination results acceptable.

NOTES
1) The applicable ASME Code Cases, if any are listed on the ASME Code Data Report.

PLAN No 2-2142

ENERGY NORTHWEST
People·Vision·Solutions

FORM NIS-2 OWNER'S REPORT FOR REPAIR/REPLACEMENT ACTIVITY (Back)

8 Tests Conducted: Hydrostatic [ ] **Pneumatic** [ ] **Nominal Operating Pressure** [ ] **Other** [ ]
Exempt [X] **Test Pressure:** Psig **Test Temperature:** °F

9. Remarks (Applicable Manufacturer's Data Reports to be attached): None

CERTIFICATE OF COMPLIANCE

I certify that the statements made in this Owner's Report are correct and that this conforms to the requirements of the ASME Code, Section XI.
Type Code Symbol Stamp: Not Applicable
Certificate Of Authorization No.: Not Applicable
Expiration Date: Not Applicable

Prepared By Kuldip Singh - Program Lead Engineer (PLE) **Signed By** Kuldip Singh - Program Lead Engineer (PLE)

Date 7/7/09 **Date** 7/7/09

CERTIFICATE OF INSERVICE INSPECTION

I, the undersigned, holding a valid commission issued by the National Board of Boiler and Pressure Vessel Inspectors and the State of _____ and employed by _____ of _____ have inspected the components described in this Owner's Report during the period _____ to _____ and state to the best of my knowledge and belief, the Owner has performed examinations and taken corrective measures described in this Owner's Report in accordance with the requirements of the ASME Code, Section XI.
By signing this certificate neither the Inspector nor his employer makes any warranty, expressed or implied, concerning the examinations and corrective measures described in this Owner's Report. Furthermore, neither the Inspector nor his employer shall be liable in any manner for any personal injury or property damage or a loss of any kind arising from or connected with this inspection.

N/R - Repair/Replacement 1" NPS And Smaller (Small Items) **Commissions** _____
Inspector's Signature National Board, State, and Endorsements

Date _____

PLAN No 2-2143

ENERGY NORTHWEST
People · Vision · Solutions

FORM NIS-2 OWNER'S REPORT FOR REPAIR/REPLACEMENT ACTIVITY
As Required By The Provisions Of The ASME Code Section XI

Date: 08/05/2008
Sheet: 1 Of 1
Unit: Not Applicable

1. Owner: Energy Northwest
Address: Columbia Generating Station, North Power Plant Loop, Richland, Washington, 99352
2. Plant: Columbia Generating Station
Address: Columbia Generating Station, North Power Plant Loop, Richland, Washington, 99352
3. (a) Work Performed By: Energy Northwest
(b) Repair/Replacement Organization P.O. No, Job No, etc.: Energy Northwest
(c) Type Code Symbol Stamp: Not Applicable
(d) Certificate Of Authorization No.: Not Applicable
(e) Expiration Date: Not Applicable
4. Identification Of System: Reactor Core Isolation Cooling (RCIC) System
5. (a) Applicable Construction Code: ASME Section III, Code Class 2, 1971 Edition with Winter 1973 Addenda, Code Case: Note 1
(b) Applicable Edition Of ASME Section XI Used For Repair/Replacement Activity: 2001 Edition with 2003 Addenda
(c) Applicable ASME Section XI Case(s): None
6. Identification Of Components

Name Of Component	Name Of Manufacturer	Manufacturer's Serial No	National Board No	Other I.D.	Year Built	Corrected, Removed Or Installed	ASME Code Stamped (Yes Or No) Code Class
RCIC(16)-1	WPPSS*	RCIC(16)-1-P1	N/A	N/A	1983	See Item 7 Below	Yes, Code Class 2

7. Description Of Work Performed: Replaced rupture disc for RCIC-RD-1. The replacement work was performed as follows:

1) Removed existing rupture disc for RCIC-RD-1.
2) Installed new rupture disc in RCIC-RD-1.
3) Reinstalled existing studs for the bolted joint.
4) Reinstalled existing nuts for the bolted joint.
5) Performed VT-2 visual examination during pressure test to confirm pressure boundary integrity of the joint. No evidence of leakage during the pressure test.

Replaced rupture disc for RCIC-RD-2. The replacement work was performed as follows:

1) Removed existing rupture disc for RCIC-RD-2.
2) Installed new rupture disc in RCIC-RD-2.
3) Reinstalled existing studs for the bolted joint.
4) Reinstalled existing nuts for the bolted joint.
5) Performed VT-2 visual examination during pressure test to confirm pressure boundary integrity of the joint. No evidence of leakage during the pressure test.

NOTES -

1) The applicable ASME Code Cases, if any are listed on the ASME Code Data Reports.
2) * Company name changed from Washington Public Power Supply System (WPPSS) to Energy Northwest (EN) in 1999.

PLAN No 2-2143

ENERGY NORTHWEST
People · Vision · Solutions

FORM NIS-2 OWNER'S REPORT FOR REPAIR/REPLACEMENT ACTIVITY (Back)

8 Tests Conducted: Hydrostatic [ ] **Pneumatic** [ ] **Nominal Operating Pressure** [X] **Other** [ ]
Exempt [ ] **Test Pressure:** 3 Psig **Test Temperature:** 83.4° F

9. Remarks (Applicable Manufacturer's Data Reports to be attached): None

CERTIFICATE OF COMPLIANCE

I certify that the statements made in this Owner's Report are correct and that this conforms to the requirements of the ASME Code, Section XI.
Type Code Symbol Stamp: Not Applicable
Certificate Of Authorization No.: Not Applicable
Expiration Date: Not Applicable

Prepared By Kuldip Singh - Program Lead Engineer (PLE) **Signed By** Kuldip Singh - Program Lead Engineer (PLE)

Date 8/5/08 **Date** 8/5/08

CERTIFICATE OF INSERVICE INSPECTION

I, the undersigned, holding a valid commission issued by the National Board of Boiler and Pressure Vessel Inspectors and the State of Washington ***and employed by*** Hartford Steam Boiler Of Connecticut of Hartford, Connecticut ***have inspected the components described in this Owner's Report during the period*** 03/03/2008 ***to*** 08/12/2008 ***and state to the best of my knowledge and belief, the Owner has performed examinations and taken corrective measures described in this Owner's Report in accordance with the requirements of the ASME Code, Section XI.***
By signing this certificate neither the Inspector nor his employer makes any warranty, expressed or implied, concerning the examinations and corrective measures described in this Owner's Report. Furthermore, neither the Inspector nor his employer shall be liable in any manner for any personal injury or property damage or a loss of any kind arising from or connected with this inspection.

Inspector's Signature **Commissions** 13172 WANI
National Board, State, and Endorsements

Date 08/12/2008

PLAN No 2-2144

ENERGY NORTHWEST
People·Vision·Solutions

FORM NIS-2 OWNER'S REPORT FOR REPAIR/REPLACEMENT ACTIVITY
As Required By The Provisions Of The ASME Code Section XI

Date: 08/14/2008
Sheet: 1 Of 1
Unit: Not Applicable

1. **Owner:** Energy Northwest
   Address: Columbia Generating Station, North Power Plant Loop, Richland, Washington, 99352
2. **Plant:** Columbia Generating Station
   Address: Columbia Generating Station, North Power Plant Loop, Richland, Washington, 99352
3. **(a) Work Performed By:** Energy Northwest
   (b) Repair/Replacement Organization P.O. No, Job No, etc.: Energy Northwest
   (c) Type Code Symbol Stamp: Not Applicable
   (d) Certificate Of Authorization No.: Not Applicable
   (e) Expiration Date: Not Applicable
4. **Identification Of System:** Service Water (SW) System
5. **(a) Applicable Construction Code:** ASME Section III, Code Class 3, 1971 Edition with Winter 1973 Addenda, Code Case: Note 1
   (b) Applicable Edition Of ASME Section XI Used For Repair/Replacement Activity: 2001 Edition with 2003 Addenda
   (c) Applicable ASME Section XI Code Case(s): None
6. **Identification Of Components**

Name Of Component	Name Of Manufacturer	Manufacturer's Serial No	National Board No	Other I.D.	Year Built	Corrected, Removed Or Installed	ASME Code Stamped (Yes Or No) Code Class
SW(22)-2	WPPSS*	SW(22)-2-P1	N/A	N/A	1983	See Item 7 Below	Yes, Code Class 3

7. **Description Of Work:** Cut and rewelded existing welds for flow element SW-FE-14A. The repair work was performed as follows:
   1) Cut/ground existing socket welds.
   2) Prepped cut/ground surfaces on as needed basis for rewelding.
   3) Reinstalled pipe nipples.
   4) Made required socket welds.
   5) Performed visual examination on the final socket welds. Visual examination results acceptable.

NOTES -
1) The applicable ASME Code Cases, if any are listed on the ASME Code Data Reports.
2) * Company name changed from Washington Public Power Supply System (WPPSS) to Energy Northwest (EN) in 1999.

PLAN No 2-2144

ENERGY NORTHWEST
People · Vision · Solutions

FORM NIS-2 OWNER'S REPORT FOR REPAIR/REPLACEMENT ACTIVITY (Back)

8 Tests Conducted: Hydrostatic [ ] **Pneumatic** [ ] **Nominal Operating Pressure** [ ] **Other** [ ]
Exempt [X] **Test Pressure:** Psig **Test Temperature:** °F

9. Remarks (Applicable Manufacturer's Data Reports to be attached): None

CERTIFICATE OF COMPLIANCE

I certify that the statements made in this Owner's Report are correct and that this conforms to the requirements of the ASME Code, Section XI.
Type Code Symbol Stamp: Not Applicable
Certificate Of Authorization No.: Not Applicable
Expiration Date: Not Applicable

Prepared By Kuldip Singh — Kuldip Singh - Program Lead Engineer (PLE) ***Signed By*** Kuldip Singh — Kuldip Singh - Program Lead Engineer (PLE)

Date 8/14/08 ***Date*** 8/14/08

CERTIFICATE OF INSERVICE INSPECTION

I, the undersigned, holding a valid commission issued by the National Board of Boiler and Pressure Vessel Inspectors and the State of _____ and employed by _____ of _____ have inspected the components described in this Owner's Report during the period _____ to _____ and state to the best of my knowledge and belief, the Owner has performed examinations and taken corrective measures described in this Owner's Report in accordance with the requirements of the ASME Code, Section XI.
By signing this certificate neither the Inspector nor his employer makes any warranty, expressed or implied, concerning the examinations and corrective measures described in this Owner's Report. Furthermore, neither the Inspector nor his employer shall be liable in any manner for any personal injury or property damage or a loss of any kind arising from or connected with this inspection.

N/R - Repair/Replacement 1" NPS And Smaller (Small Items) ***Commissions*** _____
Inspector's Signature — National Board, State, and Endorsements

Date _____

PLAN No 2-2145

ENERGY NORTHWEST
People · Vision · Solutions

FORM NIS-2 OWNER'S REPORT FOR REPAIR/REPLACEMENT ACTIVITY
As Required By The Provisions Of The ASME Code Section XI

Date: 08/14/2008
Sheet: 1 Of 1
Unit: Not Applicable

1. **Owner:** Energy Northwest
   Address: Columbia Generating Station, North Power Plant Loop, Richland, Washington, 99352
2. **Plant:** Columbia Generating Station
   Address: Columbia Generating Station, North Power Plant Loop, Richland, Washington, 99352
3. **(a) Work Performed By:** Energy Northwest
   (b) Repair/Replacement Organization P.O. No, Job No, etc.: Energy Northwest
   (c) Type Code Symbol Stamp: Not Applicable
   (d) Certificate Of Authorization No.: Not Applicable
   (e) Expiration Date: Not Applicable
4. **Identification Of System:** Reactor Core Isolation Cooling (RCIC) System
5. **(a) Applicable Construction Code:** ASME Section III, Code Class 2, 1971 Edition with Winter 1973 Addenda, Code Case: Note 1
   (b) Applicable Edition Of ASME Section XI Used For Repair/Replacement Activity: 2001 Edition with 2003 Addenda
   (c) Applicable ASME Section XI Code Case(s): None
6. **Identification Of Components**

Name Of Component	Name Of Manufacturer	Manufacturer's Serial No	National Board No	Other I.D.	Year Built	Corrected, Removed Or Installed	ASME Code Stamped (Yes Or No) Code Class
RCIC(13)-4CL2	WPPSS*	RCIC(13)-4CL2-P1	N/A	N/A	1983	See Item 7 Below	Yes, Code Class 2

7. **Description Of Work:** Replaced existing level switch RCIC-LS-N010 (RCIC-LS-10). The replacement work was performed as follows:
   1) Removed existing level switch RCIC-LS-N010 (RCIC-LS-10).
   2) Installed replacement piping material such as pipe and cap.
   3) Installed replacement level switch RCIC-LS-N010 (RCIC-LS-10).
   4) Made required socket welds.
   5) Performed visual examination on the final socket welds. Visual examination results acceptable.
   6) Performed liquid penetrant (PT) examination on the final socket welds. Liquid penetrant (PT) examination results acceptable.

NOTES -
1) The applicable ASME Code Cases, if any are listed on the ASME Code Data Reports.
2) * Company name changed from Washington Public Power Supply System (WPPSS) to Energy Northwest (EN) in 1999.
3) Level switch RCIC-LS-N010 (RCIC-LS-10) is considered as a Non-ASME item.

PLAN No 2-2145

ENERGY NORTHWEST
People · Vision · Solutions

FORM NIS-2 OWNER'S REPORT FOR REPAIR/REPLACEMENT ACTIVITY (Back)

8 Tests Conducted: Hydrostatic [ ] **Pneumatic** [ ] **Nominal Operating Pressure** [ ] **Other** [ ]
Exempt [X] **Test Pressure:** Psig **Test Temperature:** °F

9. Remarks (Applicable Manufacturer's Data Reports to be attached): None

CERTIFICATE OF COMPLIANCE

I certify that the statements made in this Owner's Report are correct and that this conforms to the requirements of the ASME Code, Section XI.
Type Code Symbol Stamp: Not Applicable
Certificate Of Authorization No.: Not Applicable
Expiration Date: Not Applicable

Prepared By Kuldip Singh **Signed By** Kuldip Singh
Kuldip Singh - Program Lead Engineer (PLE) Kuldip Singh - Program Lead Engineer (PLE)
Date 8/14/08 **Date** 8/14/08

CERTIFICATE OF INSERVICE INSPECTION

I, the undersigned, holding a valid commission issued by the National Board of Boiler and Pressure Vessel Inspectors and the State of _____ and employed by _____ of _____ have inspected the components described in this Owner's Report during the period _____ to _____ and state to the best of my knowledge and belief, the Owner has performed examinations and taken corrective measures described in this Owner's Report in accordance with the requirements of the ASME Code, Section XI.
By signing this certificate neither the Inspector nor his employer makes any warranty, expressed or implied, concerning the examinations and corrective measures described in this Owner's Report. Furthermore, neither the Inspector nor his employer shall be liable in any manner for any personal injury or property damage or a loss of any kind arising from or connected with this inspection.

N/R - Repair/Replacement 1" NPS And Smaller (Small Items) **Commissions** _____
Inspector's Signature National Board, State, and Endorsements
Date _____

PLAN No 2-2147

ENERGY NORTHWEST
People·Vision·Solutions

FORM NIS-2 OWNER'S REPORT FOR REPAIR/REPLACEMENT ACTIVITY
As Required By The Provisions Of The ASME Code Section XI

Date: 04/15/2009
Sheet: 1 Of 1
Unit: Not Applicable

1. **Owner:** Energy Northwest
   Address: Columbia Generating Station, North Power Plant Loop, Richland, Washington, 99352
2. **Plant:** Columbia Generating Station
   Address: Columbia Generating Station, North Power Plant Loop, Richland, Washington, 99352
3. **(a) Work Performed By:** Energy Northwest
   (b) Repair/Replacement Organization P.O. No, Job No, etc.: Energy Northwest
   (c) Type Code Symbol Stamp: Not Applicable
   (d) Certificate Of Authorization No.: Not Applicable
   (e) Expiration Date: Not Applicable
4. **Identification Of System:** main Steam (MS) System
5. **(a) Applicable Construction Code:** ASME Section III, Code Class 1, 1971 Edition with no Addenda, Code Case: Note 1
   (b) Applicable Edition Of ASME Section XI Used For Repair/Replacement Activity: 2001 Edition with 2003 Addenda
   (c) Applicable ASME Section XI Case(s): None
6. **Identification Of Components**

Name Of Component	Name Of Manufacturer	Manufacturer's Serial No	National Board No	Other I.D.	Year Built	Corrected, Removed Or Installed	ASME Code Stamped (Yes Or No) Code Class
Spare Nozzles For MSRV's	Crosby	See Item No 7 Below For Serial No's Of Spare Nozzles	N/A	N/A	N/A	Corrected	No, Code Class 1 Spare Nozzles

7. **Description Of Work Performed:** Modified spare nozzles for Main Steam Relief Valves (MSRV's). The work was performed as follows:
   1) Modified (machined) the spare nozzles in accordance with Crosby's Field Services Procedure No FS-5335, CVI No 932-00,2.
   2) Performed Fluorescent Liquid Penetrant (PT) examination on the final machined surfaces of the spare nozzles. The Fluorescent Liquid Penetrant (PT) examination results were acceptable.
   3) Lined out the old Part No N93184 on the modified spare nozzles and vibroengrave the new Part No N97498.
   4) The following is a listing of spare nozzles which were modified (machined):

   New Nozzle Serial No N97498-51-0155 (Old Nozzle Serial No N93184-51-0155)
   New Nozzle Serial No N97498-52-0159 (Old Nozzle Serial No N93184-52-0159)

NOTES -
1) The applicable ASME Code Cases, if any are listed on the ASME Code Data Reports.
2) The spare modified (machined) nozzles are kept as replacement nozzles for future use. When need arises in the future, these spare modified nozzles will be installed in the Main Steam Relief Valves (MSRV's) as replacement parts.

PLAN No 2-2147

ENERGY NORTHWEST
People · Vision · Solutions

FORM NIS-2 OWNER'S REPORT FOR REPAIR/REPLACEMENT ACTIVITY (Back)

8 Tests Conducted: Hydrostatic [ ] **Pneumatic** [ ] **Nominal Operating Pressure** [ ] **Other** [ ]
Exempt [X] **Test Pressure:** Psig **Test Temperature:** °F

9. Remarks (Applicable Manufacturer's Data Reports to be attached): None

CERTIFICATE OF COMPLIANCE

I certify that the statements made in this Owner's Report are correct and that this conforms to the requirements of the ASME Code, Section XI.
Type Code Symbol Stamp: Not Applicable
Certificate Of Authorization No.: Not Applicable
Expiration Date: Not Applicable

Prepared By Kuldip Singh - Program Lead Engineer (PLE) ***Signed By*** Kuldip Singh - Program Lead Engineer (PLE)

Date 4/15/09 ***Date*** 4/15/09.

CERTIFICATE OF INSERVICE INSPECTION

I, the undersigned, holding a valid commission issued by the National Board of Boiler and Pressure Vessel Inspectors and the State of Washington ***and employed by*** Hartford Steam Boiler Of Connecticut of Hartford, Connecticut ***have inspected the components described in this Owner's Report during the period*** 4/24/2008 ***to*** 4/21/2009 ***and state to the best of my knowledge and belief, the Owner has performed examinations and taken corrective measures described in this Owner's Report in accordance with the requirements of the ASME Code, Section XI.***
By signing this certificate neither the Inspector nor his employer makes any warranty, expressed or implied, concerning the examinations and corrective measures described in this Owner's Report. Furthermore, neither the Inspector nor his employer shall be liable in any manner for any personal injury or property damage or a loss of any kind arising from or connected with this inspection.

Inspector's Signature ***Commissions*** 13172 WANI
National Board, State, and Endorsements

Date 4/21/2009

PLAN No 2-2148

ENERGY NORTHWEST
People · Vision · Solutions

FORM NIS-2 OWNER'S REPORT FOR REPAIR/REPLACEMENT ACTIVITY
As Required By The Provisions Of The ASME Code Section XI

1. Owner: Energy Northwest
Address: Columbia Generating Station, North Power Plant Loop, Richland, Washington, 99352
2. Plant: Columbia Generating Station
Address: Columbia Generating Station, North Power Plant Loop, Richland, Washington, 99352

Date: 08/14/2008
Sheet: 1 Of 1
Unit: Not Applicable

3. (a) Work Performed By: Energy Northwest
(b) Repair/Replacement Organization P.O. No, Job No, etc.: Energy Northwest
(c) Type Code Symbol Stamp: Not Applicable
(d) Certificate Of Authorization No.: Not Applicable
(e) Expiration Date: Not Applicable
4. Identification Of System: Off Gas (OG) System
5. (a) Applicable Construction Code: ASME Section III, Code Class 3, 1971 Edition with Summer 1972 Addenda, Code Case: Note 1
(b) Applicable Edition Of ASME Section XI Used For Repair/Replacement Activity: 2001 Edition with 2003 Addenda
(c) Applicable ASME Section XI Case(s): None
6. Identification Of Components

Name Of Component	Name Of Manufacturer	Manufacturer's Serial No	National Board No	Other I.D.	Year Built	Corrected, Removed Or Installed	ASME Code Stamped (Yes Or No) Code Class
OG-DY-30A	Cosmodyne	74-56014-1	N/A	N/A	1975	See Item 7 Below	Yes, Code Class 3

7. Description Of Work Performed: Removed and reinstalled diaphragm plate for OG-DY-30A. The work was performed as follows:

1) Removed existing diaphragm plate.
2) Reinstalled existing diaphragm plate.
3) Made required weld.
4) Performed visual examination on the final weld. Visual examination results acceptable.
5) Reinstalled blind flange.
6) Reinstalled existing studs/bolts for the bolted joint.
7) Reinstalled existing nuts for the bolted joint.
8) Performed VT-2 visual examination during pressure test to confirm pressure boundary integrity of the joint. No evidence of leakage during the pressure test.

NOTES -

1) The applicable ASME Code Cases, if any are listed on the ASME Code Data Report.

PLAN No 2-2148

ENERGY NORTHWEST
People · Vision · Solutions

FORM NIS-2 OWNER'S REPORT FOR REPAIR/REPLACEMENT ACTIVITY (Back)

8 Tests Conducted: Hydrostatic [ ] **Pneumatic** [ ] **Nominal Operating Pressure** [X] **Other** [ ]
Exempt [ ] **Test Pressure:** 2.2 Psig **Test Temperature:** 77° F

9. Remarks (Applicable Manufacturer's Data Reports to be attached): None

CERTIFICATE OF COMPLIANCE

I certify that the statements made in this Owner's Report are correct and that this conforms to the requirements of the ASME Code, Section XI.
Type Code Symbol Stamp: Not Applicable
Certificate Of Authorization No.: Not Applicable
Expiration Date: Not Applicable

Prepared By Kuldip Singh - Program Lead Engineer (PLE) ***Signed By*** Kuldip Singh - Program Lead Engineer (PLE)

Date 8/14/08 ***Date*** 8/14/08

CERTIFICATE OF INSERVICE INSPECTION

I, the undersigned, holding a valid commission issued by the National Board of Boiler and Pressure Vessel Inspectors and the State of Washington ***and employed by*** Hartford Steam Boiler Of Connecticut of Hartford, Connecticut ***have inspected the components described in this Owner's Report during the period*** 05/04/08 ***to*** 08/28/08 ***and state to the best of my knowledge and belief, the Owner has performed examinations and taken corrective measures described in this Owner's Report in accordance with the requirements of the ASME Code, Section XI.***
By signing this certificate neither the Inspector nor his employer makes any warranty, expressed or implied, concerning the examinations and corrective measures described in this Owner's Report. Furthermore, neither the Inspector nor his employer shall be liable in any manner for any personal injury or property damage or a loss of any kind arising from or connected with this inspection.

Inspector's Signature ***Commissions*** 13172 WANI
National Board, State, and Endorsements

Date 8/28/2008

PLAN No 2-2152

ENERGY NORTHWEST
People · Vision · Solutions

FORM NIS-2 OWNER'S REPORT FOR REPAIR/REPLACEMENT ACTIVITY
As Required By The Provisions Of The ASME Code Section XI

1. Owner: Energy Northwest
Address: Columbia Generating Station, North Power Plant Loop, Richland, Washington, 99352
2. Plant: Columbia Generating Station
Address: Columbia Generating Station, North Power Plant Loop, Richland, Washington, 99352

Date: 06/08/2009
Sheet: 1 Of 1
Unit: Not Applicable

3. (a) Work Performed By: Energy Northwest
(b) Repair/Replacement Organization P.O. No, Job No, etc.: Energy Northwest
(c) Type Code Symbol Stamp: Not Applicable
(d) Certificate Of Authorization No.: Not Applicable
(e) Expiration Date: Not Applicable
4. Identification Of System: Service Water (SW) System
5. (a) Applicable Construction Code: ASME Section III, Code Class 3, 1974 Edition with Winter 1976 Addenda, Code Case: Note 1
(b) Applicable Edition Of ASME Section XI Used For Repair/Replacement Activity: 2001 Edition with 2003 Addenda
(c) Applicable ASME Section XI Case(s): None
6. Identification Of Components

Name Of Component	Name Of Manufacturer	Manufacturer's Serial No	National Board No	Other I.D.	Year Built	Corrected, Removed Or Installed	ASME Code Stamped (Yes Or No) Code Class
SW(21)-2	BF Shaw	SW(21)-2-10	N/A	N/A	1979	See Item 7 Below	Yes, Code Class 3

7. Description Of Work Performed: Replaced existing studs and nuts for valve SW-V-170B. The replacement work was performed as follows:

1) Removed existing studs.
2) Removed existing nuts.
3) Installed sixteen (16) replacement studs.
4) Installed sixteen (16) replacement nuts.
5) Performed VT-2 visual examination during pressure test to confirm pressure boundary integrity of the joints. No evidence of leakage during the pressure test.

NOTES -

1) The applicable ASME Code Cases, if any are listed on the ASME Code Data Reports.

PLAN No 2-2152

ENERGY NORTHWEST
People · Vision · Solutions

FORM NIS-2 OWNER'S REPORT FOR REPAIR/REPLACEMENT ACTIVITY (Back)

8 Tests Conducted: Hydrostatic [ ] **Pneumatic** [ ] **Nominal Operating Pressure** [X] **Other** [ ]
Exempt [ ] **Test Pressure:** 206 Psig **Test Temperature:** 74° F

9. Remarks (Applicable Manufacturer's Data Reports to be attached): None

CERTIFICATE OF COMPLIANCE

I certify that the statements made in this Owner's Report are correct and that this conforms to the requirements of the ASME Code, Section XI.
Type Code Symbol Stamp: Not Applicable
Certificate Of Authorization No.: Not Applicable
Expiration Date: Not Applicable

Prepared By Kuldip Singh - Program Lead Engineer (PLE) ***Signed By*** Kuldip Singh - Program Lead Engineer (PLE)

Date 6/8/09 ***Date*** 6/8/09

CERTIFICATE OF INSERVICE INSPECTION

I, the undersigned, holding a valid commission issued by the National Board of Boiler and Pressure Vessel Inspectors and the State of Washington ***and employed by*** Hartford Steam Boiler Of Connecticut of Hartford, Connecticut ***have inspected the components described in this Owner's Report during the period*** 4/23/2008 ***to*** 6/11/2009 ***and state to the best of my knowledge and belief, the Owner has performed examinations and taken corrective measures described in this Owner's Report in accordance with the requirements of the ASME Code, Section XI.***
By signing this certificate neither the inspector nor his employer makes any warranty, expressed or implied, concerning the examinations and corrective measures described in this Owner's Report. Furthermore, neither the inspector nor his employer shall be liable in any manner for any personal injury or property damage or a loss of any kind arising from or connected with this inspection.

Inspector's Signature ***Commissions*** 13172 WANI
National Board, State, and Endorsements

Date 6/11/2009

PLAN No 2-2153

ENERGY NORTHWEST
People · Vision · Solutions

FORM NIS-2 OWNER'S REPORT FOR REPAIR/REPLACEMENT ACTIVITY
As Required By The Provisions Of The ASME Code Section XI

Date: 04/15/2009
Sheet: 1 Of 1
Unit: Not Applicable

1. **Owner:** Energy Northwest
   Address: Columbia Generating Station, North Power Plant Loop, Richland, Washington, 99352
2. **Plant:** Columbia Generating Station
   Address: Columbia Generating Station, North Power Plant Loop, Richland, Washington, 99352
3. **(a) Work Performed By:** Energy Northwest
   (b) Repair/Replacement Organization P.O. No, Job No, etc.: Energy Northwest
   (c) Type Code Symbol Stamp: Not Applicable
   (d) Certificate Of Authorization No.: Not Applicable
   (e) Expiration Date: Not Applicable
4. **Identification Of System:** Reactor Core Isolation Cooling (RCIC) System
5. **(a) Applicable Construction Code:** ASME Section III, Code Class 2, 1971 Edition with Summer 1973 Addenda, Code Case: Note 1
   (b) Applicable Edition Of ASME Section XI Used For Repair/Replacement Activity: 2001 Edition with 2003 Addenda
   (c) Applicable ASME Section XI Case(s): None
6. **Identification Of Components**

Name Of Component	Name Of Manufacturer	Manufacturer's Serial No	National Board No	Other I.D.	Year Built	Corrected, Removed Or Installed	ASME Code Stamped (Yes Or No) Code Class
RCIC-V-74	Velan	0179	N/A	N/A	1975	See Item 7 Below	Yes, Code Class 2
Wedge	Velan	N/A	N/A	N/A	1975	Removed	No, Code Class 2 *
Wedge	Velan	4346	N/A	N/A	1994	Installed	Yes, Code Class 2

7. **Description Of Work Performed:** Replaced existing wedge for valve RCIC-V-74. The replacement work was performed as follows:
   1) Removed existing wedge from valve RCIC-V-74.
   2) Machined the downstream side of the hardfaced seating surface on the replacement wedge, Serial No 4346.
   3) Performed liquid penetrant (PT) examination on the final downstream side of the hardfaced seating surface on the replacement wedge, Serial No 4346. Liquid penetrant (PT) examination results acceptable.
   4) Machined the upstream side of the hardfaced seating surface on the replacement wedge, Serial No 4346.
   5) Performed liquid penetrant (PT) examination on the final upstream side of the hardfaced seating surface on the replacement wedge, Serial No 4346. Liquid penetrant (PT) examination results acceptable.
   6) Machined the guide surfaces on the replacement wedge, Serial No 4346.
   7) Performed liquid penetrant (PT) examination on the final guide surfaces on the replacement wedge, Serial No 4346. Liquid penetrant (PT) examination results acceptable.
   8) Installed replacement wedge, Serial No 4346 in valve RCIC-V-74.
   9) Performed VT-2 visual examination during pressure test to confirm pressure boundary integrity of the joints. No evidence of leakage during the pressure test.

NOTES
1) The applicable ASME Code Cases, if any are listed on the ASME Code Data Reports.
2) * The existing wedge was furnished as part of fully assembled ASME Code stamped valve RCIC-V-74, Serial No 0179.

PLAN No 2-2153

ENERGY NORTHWEST
People · Vision · Solutions

FORM NIS-2 OWNER'S REPORT FOR REPAIR/REPLACEMENT ACTIVITY (Back)

8 Tests Conducted: Hydrostatic [ ] **Pneumatic** [ ] **Nominal Operating Pressure** [X] **Other** [ ]
Exempt [ ] **Test Pressure:** 1000 Psig **Test Temperature:** 397° F

9. Remarks (Applicable Manufacturer's Data Reports to be attached): See attached N-2 Code Data Report for the replacement wedge, Serial No 4346.

CERTIFICATE OF COMPLIANCE

I certify that the statements made in this Owner's Report are correct and that this conforms to the requirements of the ASME Code, Section XI.
Type Code Symbol Stamp: Not Applicable
Certificate Of Authorization No.: Not Applicable
Expiration Date: Not Applicable

Prepared By Kuldip Singh - Program Lead Engineer (PLE) **Signed By** Kuldip Singh - Program Lead Engineer (PLE)

Date 4/15/09 **Date** 4/15/09

CERTIFICATE OF INSERVICE INSPECTION

I, the undersigned, holding a valid commission issued by the National Board of Boiler and Pressure Vessel Inspectors and the State of Washington ***and employed by*** Hartford Steam Boiler Of Connecticut of Hartford, Connecticut ***have inspected the components described in this Owner's Report during the period*** 4/3/2008 ***to*** 4/22/2009 ***and state to the best of my knowledge and belief, the Owner has performed examinations and taken corrective measures described in this Owner's Report in accordance with the requirements of the ASME Code, Section XI.***
By signing this certificate neither the Inspector nor his employer makes any warranty, expressed or implied, concerning the examinations and corrective measures described in this Owner's Report. Furthermore, neither the Inspector nor his employer shall be liable in any manner for any personal injury or property damage or a loss of any kind arising from or connected with this inspection.

Inspector's Signature **Commissions** 13172 WANI
National Board, State, and Endorsements

Date 4/22/2009

PLAN NO. 2-2153

Philip Sims
4/15/09.

#6

S 942081

FORM N-2 CERTIFICATE HOLDERS' DATA REPORT FOR IDENTICAL NUCLEAR PARTS AND APPURTENANCES*
As Required by the Provisions of the ASME Code, Section III
Not to Exceed One Day's Production

1. Manufactured and certified by VELAN INC. 550 McArthur Street, Montréal PQ H4T 1X8 CANADA (name and address of NPT Certificate Holder)
P2-79491-NSP ITEM-6

2. Manufactured for WASHINGTON PUBLIC POWER SUPPLY SYSTEM 301 FIFTH AVE. RICHLAND WASH USA (name and address of Purchaser)
#236874 RICHLAND WASHINGTON

3. Location of installation WPPSS WNP-2 OPS WHS COMPLEX NORTH POWER PLANT LOOP USA 99352 (name and address)
(DWG ITEM: 3,51,53&55)

4. Type: P2-3311-N2/E (drawing no.) SA-216 WCB (mat'l. spec. no.) 70,000 PSI (MIN) (tensile strength) N/A (CRN) 1994 (year built)

5. ASME Code, Section III, Division 1: 1971 (edition) SUMMER'73 (addenda date) N-CLASS: 1 (class) N/A (Code Case no.)

6. Fabricated in accordance with Const. Spec. (Div. 2 only) N/A Revision N/A Date N/A

7. Remarks: NOTE LINE #5: EXCEPT MATERIAL SPEC. SUPPLIED IS TO ASME SECTION-II PART-A CODE EDITION 1989; ADDENDA: NONE

"SPARE PARTS" FOR 4"-900# BB GATE VALVE MOTOR OPERATED (FIGURE: B12-07054B-02WN)

"WEDGE" HEAT No. 2001

8. Nom. thickness (in.) N/A Min. design thickness (in.) N/A Dia. ID (ft & in.) N/A Length overall (ft & in.) N/A

9. When applicable, Certificate Holders' Data Reports are attached for each item of this report:

Part or Appurtenance Serial Number	National Board No. in Numerical Order	Part or Appurtenance Serial Number	National Board No. in Numerical Order
(1) WEDGE SN: #4343	N/A	(26)	
(2) WEDGE SN: #4346	N/A	(27)	
(3)		(28)	
(4)		(29)	
(5)		(30)	
(6)		(31)	
(7)		(32)	
(8) WEDGE S/N 4346		(33)	
(9)		(34)	
(10)		(35)	
(11) FOR RCIC-V-74.		(36)	
(12)		(37)	
(13)		(38)	
(14)		(39)	
(15)		(40)	
(16)		(41)	
(17)		(42)	
(18)		(43) SATISFACTORY ✓ UNSATISFACTORY	
(19)		(44)	
(20)		(45) RECEIPT INSPECTOR / LEVEL / DATE	
(21)		(46)	
(22)		(47)	
(23)		(48)	
(24)		(49)	
(25)		(50)	

10. Design pressure 1337 & 1250 psi. Temp. 575 °F. Hydro. test pressure N/A (when applicable) at temp. °F
(DWG ITEMS: 3 & 5,53,55)

* Supplemental information in the form of lists, sketches, or drawings may be used provided (1) size is 8½ × 11, (2) information in items 2 and 3 on this Data Report is included on each sheet, (3) each sheet is numbered and the number of sheets is recorded at the top of this form.

(12/88) This form (E00040) may be obtained from the Order Dept., ASME, 22 Law Drive, Box 2300, Fairfield, NJ 07007-2300.

2071380291

FORM N-2 (Back — Pg. 2 of 2) S 942081

Certificate Holder's Serial Nos. WEDGE #4343 through & 4346

CERTIFICATION OF DESIGN

Design specifications certified by NOT APPLICABLE (when applicable) P.E. State N/A Reg. no. N/A

Design report* certified by NOT REQUIRED (when applicable) P.E. State N/A Reg. no. N/A

CERTIFICATE OF COMPLIANCE

We certify that the statements made in this report are correct and that this (these) 4"-900# GATE VALVE WEDGES conforms to the rules of construction of the ASME Code, Section III, Division 1.

NPT Certificate of Authorization No. N2798-2 (NPT) Expires 2 MAY 1995

Date 12 JULY/94 Name VELAN INC. (NPT Certificate Holder) Signed E.C.BUGUIS (authorized representative)

CERTIFICATE OF INSPECTION

I, the undersigned, holding a valid commission issued by the National Board of Boiler and Pressure Vessel Inspectors and the State or Province of Quebec and employed by Province of Quebec have inspected these items described in this Data Report on 93-08-17, and state that to the best of my knowledge and belief, the Certificate Holder has fabricated these parts or appurtenances in accordance with the ASME Code, Section III, Division 1. Each part listed has been authorized for stamping on the date shown above.

By signing this certificate, neither the inspector nor his employer makes any warranty, expressed or implied, concerning the equipment described in this Data Report. Furthermore, neither the inspector nor his employer shall be liable in any manner for any personal injury or property damage or loss of any kind arising from or connected with this inspection.

Date 94-8-3 Signed (Authorized Inspector) Commissions 11 (Nat'l Bd. (incl. endorsements) and state or prov. and no.)

2074139099

PLAN No 2-2154

ENERGY NORTHWEST
People · Vision · Solutions

FORM NIS-2 OWNER'S REPORT FOR REPAIR/REPLACEMENT ACTIVITY
As Required By The Provisions Of The ASME Code Section XI

1. Owner: Energy Northwest
Address: Columbia Generating Station, North Power Plant Loop, Richland, Washington, 99352
2. Plant: Columbia Generating Station
Address: Columbia Generating Station, North Power Plant Loop, Richland, Washington, 99352

Date: 05/28/2009
Sheet: 1 Of 1
Unit: Not Applicable

3. (a) Work Performed By: Energy Northwest
(b) Repair/Replacement Organization P.O. No, Job No, etc.: Energy Northwest
(c) Type Code Symbol Stamp: Not Applicable
(d) Certificate Of Authorization No.: Not Applicable
(e) Expiration Date: Not Applicable
4. Identification Of System: Reactor Core Isolation Cooling (RCIC) System
5. (a) Applicable Construction Code: ASME Section III, Code Class 2, 1971 Edition with Winter 1973 Addenda, Code Case: Note 1
(b) Applicable Edition Of ASME Section XI Used For Repair/Replacement Activity: 2001 Edition with 2003 Addenda
(c) Applicable ASME Section XI Case(s): None
6. Identification Of Components

Name Of Component	Name Of Manufacturer	Manufacturer's Serial No	National Board No	Other I.D.	Year Built	Corrected, Removed Or Installed	ASME Code Stamped (Yes Or No) Code Class
RCIC(1)-4CL2	WPPSS *	RCIC(1)-4CL2-P1	N/A	N/A	1984	See Item 7 Below	Yes, Code Class 2

7. Description Of Work Performed: Fabricated new restricting orifice plate for RCIC-RO-9. The work was performed as follows:
1) Cut the plate material to the required dimensions
2) Fabricated/machined the orifice plate to the final dimensions.
3) Final finished the orifice plate surfaces.
4) Marked the required information on the orifice plate.

NOTES -
1) The applicable ASME Code Cases, if any are listed on the ASME Code Data Reports.
2) * Company name changed from Washington Public Power Supply System (WPPSS) to Energy Northwest (EN) in 1999.
1974 Edition with Summer 1975 Addenda requirements.

PLAN No 2-2154

ENERGY NORTHWEST
People · Vision · Solutions

FORM NIS-2 OWNER'S REPORT FOR REPAIR/REPLACEMENT ACTIVITY (Back)

8 Tests Conducted: Hydrostatic [ ] **Pneumatic** [ ] **Nominal Operating Pressure** [ ] **Other** [ ]
Exempt [X] **Test Pressure:** Psig **Test Temperature:** °F

9. Remarks (Applicable Manufacturer's Data Reports to be attached): None

CERTIFICATE OF COMPLIANCE

I certify that the statements made in this Owner's Report are correct and that this conforms to the requirements of the ASME Code, Section XI.
Type Code Symbol Stamp: Not Applicable
Certificate Of Authorization No.: Not Applicable
Expiration Date: Not Applicable

Prepared By Kuldip Singh - Program Lead Engineer (PLE) **Signed By** Kuldip Singh - Program Lead Engineer (PLE)

Date 5/29/09 **Date** 5/29/09

CERTIFICATE OF INSERVICE INSPECTION

I, the undersigned, holding a valid commission issued by the National Board of Boiler and Pressure Vessel Inspectors and the State of Washington ***and employed by*** Hartford Steam Boiler Of Connecticut of Hartford, Connecticut ***have inspected the components described in this Owner's Report during the period*** 12-8-08 ***to*** 6-5-09 ***and state to the best of my knowledge and belief, the Owner has performed examinations and taken corrective measures described in this Owner's Report in accordance with the requirements of the ASME Code, Section XI.***
By signing this certificate neither the Inspector nor his employer makes any warranty, expressed or implied, concerning the examinations and corrective measures described in this Owner's Report. Furthermore, neither the Inspector nor his employer shall be liable in any manner for any personal injury or property damage or a loss of any kind arising from or connected with this inspection.

Fred A Allgaier — Inspector's Signature **Commissions** 13324 W A N I — National Board, State, and Endorsements

Date 6-5-09

PLAN No 2-2157

ENERGY NORTHWEST
People · Vision · Solutions

FORM NIS-2 OWNER'S REPORT FOR REPAIR/REPLACEMENT ACTIVITY
As Required By The Provisions Of The ASME Code Section XI

Date: 08/05/2008
Sheet: 1 Of 1
Unit: Not Applicable

1. **Owner:** Energy Northwest
   Address: Columbia Generating Station, North Power Plant Loop, Richland, Washington, 99352
2. **Plant:** Columbia Generating Station
   Address: Columbia Generating Station, North Power Plant Loop, Richland, Washington, 99352
3. **(a) Work Performed By:** Energy Northwest
   (b) Repair/Replacement Organization P.O. No, Job No, etc.: Energy Northwest
   (c) Type Code Symbol Stamp: Not Applicable
   (d) Certificate Of Authorization No.: Not Applicable
   (e) Expiration Date: Not Applicable
4. **Identification Of System:** Residual Heat Removal (RHR) System
5. **(a) Applicable Construction Code:** ASME Section III, Code Class 2, 1971 Edition with Winter 1972 Addenda, Code Case: Note 1
   (b) Applicable Edition Of ASME Section XI Used For Repair/Replacement Activity: 2001 Edition with 2003 Addenda
   (c) Applicable ASME Section XI Case(s): None
6. **Identification Of Components**

Name Of Component	Name Of Manufacturer	Manufacturer's Serial No	National Board No	Other I.D.	Year Built	Corrected, Removed Or Installed	ASME Code Stamped (Yes Or No) Code Class
RHR((3)-1C	WPPSS**	RHR(3)-1C-P1	N/A	N/A	1983	See Item 7 Below	Yes, Code Class 2
RHR-P-3	Crane Deming	NDC-000719	N/A	N/A	1976	See Item 7 Below	Yes, Code Class 2
Pump Casing	Crane Deming	N/A*	N/A	N/A	1976	Removed	Yes, Code Class 2*
Pump Casing	Crane Co	9527734-1	N/A	N/A	1996	Installed	Yes, Code Class 2

7. **Description Of Work Performed:** Replaced existing pump casing for pump RHR-P-3. The replacement work was performed as follows:
   1) Removed existing pump casing.
   2) Installed replacement pump casing Serial No 9527734-1.
   3) Installed two (2) modified replacement nuts for the pump discharge bolted joint.
   4) Reinstalled remaining studs and nuts for the pump discharge bolted joint.
   5) Reinstalled studs and nuts for the pump suction bolted joint.
   6) Performed VT-2 visual examination during pressure test to confirm pressure boundary integrity of the joints. No evidence of leakage during the pressure test.

NOTES -

1) The applicable ASME Code Cases, if any are listed on the ASME Code Data Reports.
2) OEM/OES Crane Deming Pump pumps are now being manufactured by OEM/OES Crane Co.
3) * The existing pump casing which was removed was part of the ASME Code Stamped pump RHR-P-3, Serial No NDC-000719.
4) ** Company name changed from Washington Public Power Supply System (WPPSS) to Energy Northwest (EN) in 1999.
5) The existing ASME Code Stamped pump RHR-P-3, Serial No NDC-000719 is certified to comply with ASME Section III, Code Class 2, 1971 Edition with Winter 1972 Addenda requirements.
6) The existing ASME Code Stamped piping system in which the two (2) modified replacement nuts for pump RHR-P-3, Serial No NDC-000719 were installed is Residual Heat Removal (RHR) piping system RHR(3)-1C-P1. This piping system is certified to comply with ASME Section III, Code Class 2, 1971 Edition with Winter 1973 Addenda requirements.

PLAN No 2-2157

ENERGY NORTHWEST
People · Vision · Solutions

FORM NIS-2 OWNER'S REPORT FOR REPAIR/REPLACEMENT ACTIVITY (Back)

8 Tests Conducted: Hydrostatic [ ] **Pneumatic** [ ] **Nominal Operating Pressure** [X] **Other** [ ]
Exempt [ ] **Test Pressure:** 115/122 Psig **Test Temperature:** 61° F

9. Remarks (Applicable Manufacturer's Data Reports to be attached): See attached N-2 Code Data Report for the replacement pump casing Serial No 9527734-1.

CERTIFICATE OF COMPLIANCE

I certify that the statements made in this Owner's Report are correct and that this conforms to the requirements of the ASME Code, Section XI.
Type Code Symbol Stamp: Not Applicable
Certificate Of Authorization No.: Not Applicable
Expiration Date: Not Applicable

Prepared By Kuldip Singh - Program Lead Engineer (PLE) ***Signed By*** Kuldip Singh - Program Lead Engineer (PLE)

Date 8/5/08 ***Date*** 8/5/08

CERTIFICATE OF INSERVICE INSPECTION

I, the undersigned, holding a valid commission issued by the National Board of Boiler and Pressure Vessel Inspectors and the State of Washington ***and employed by*** Hartford Steam Boiler Of Connecticut of Hartford, Connecticut ***have inspected the components described in this Owner's Report during the period*** 06/02/2008 ***to*** 08/12/2008 ***and state to the best of my knowledge and belief, the Owner has performed examinations and taken corrective measures described in this Owner's Report in accordance with the requirements of the ASME Code, Section XI.***
By signing this certificate neither the inspector nor his employer makes any warranty, expressed or implied, concerning the examinations and corrective measures described in this Owner's Report. Furthermore, neither the inspector nor his employer shall be liable in any manner for any personal injury or property damage or a loss of any kind arising from or connected with this inspection.

Inspector's Signature ***Commissions*** 13172 WANI
National Board, State, and Endorsements

Date 08/12/2008

PCAN NO. 2-2157

FORM N-2 CERTIFICATE HOLDERS' DATA REPORT FOR IDENTICAL NUCLEAR PARTS AND APPURTENANCES*

As Required by the Provisions of the ASME Code, Section III

Not to Exceed One Day's Production

Pg. 1 of 3

8/5/08

1. Manufactured and certified by CRANE CO.; CHEMPUMP DIVISION; 175 TITUS AVE.; WARRINGTON, PA. 18976 (name and address of NPT Certificate Holder)

2. Manufactured for WASHINGTON PUBLIC POWER SUPPLY SYSTEM; RICHLAND, WA 99352 (name and address of Purchaser)

3. Location of installation WNP-2 NORTH POWER PLANT LOOP; RICHLAND, WA 99352 (name and address)

4. Type: * (drawing no.) * (mat'l. spec. no.) * (tensile strength) N/A (CRN) 1996 (year built)

5. ASME Code, Section III, Division 1: DESIGN 1971 WINTER 1972 (edition) MATERIALS 1989 NONE (addenda date) 2 (class) N/A (Code Case no.)

6. Fabricated in accordance with Const. Spec. (Div. 2 only) N/A (no.) Revision _____ Date _____

7. Remarks: NOMINAL INLET SIZE - 2"

RHR-P-3 CASING S/N 9527734-1

*SEE PAGE #3

8. Nom. thickness (in.) * Min. design thickness (in.) * Dia. ID (ft & in.) N/A Length overall (ft & in.) N/A

9. When applicable, Certificate Holders' Data Reports are attached for each item of this report:

Part or Appurtenance Serial Number	National Board No. in Numerical Order	Part or Appurtenance Serial Number	National Board No. in Numerical Order
(1) 9527734-1	N/A	(26)	
(2)		(27)	
(3)		(28)	
(4)		(29)	
(5)		(30)	
(6)		(31)	
(7)		(32)	
(8)		(33)	
(9)		(34)	
(10)		(35)	
(11)		(36)	
(12)		(37)	
(13)		(38)	
(14)		(39)	
(15)		(40)	
(16)		(41)	
(17)		(42)	
(18)		(43)	
(19)		(44)	
(20)		(45)	
(21)			
(22)			
(23)			
(24)			
(25)			

S/N: 9527734-1
MODEL: DEMING FIG.3065 SIZE A05
CUSTOMER PO: 249007
ID: 58167200
PAGE: 4

10. Design pressure 150 psi. Temp. 180 °F. Hydro. test pressure 225 PSI (when applicable) at temp. °F

* Supplemental information in the form of lists, sketches, or drawings may be used provided (1) size is 8½ × 11, (2) information in items 2 and 3 on this Data Report is included on each sheet, (3) each sheet is numbered and the number of sheets is recorded at the top of this form.

(12/88) This form (E00040) may be obtained from the Order Dept., ASME, 22 Law Drive, Box 2300, Fairfield, NJ 07007-2300.

FORM N-2 (Back — Pg. 2 of 3)

Certificate Holder's Serial Nos. 9527734-1 through N/A

CERTIFICATION OF DESIGN

Design specifications certified by JACK R. COLE (when applicable) P.E. State WA Reg. no. 20653

Design report* certified by N/A (when applicable) P.E. State _____ Reg. no. _____

CERTIFICATE OF COMPLIANCE

We certify that the statements made in this report are correct and that this (these) PUMP CASING conforms to the rules of construction of the ASME Code, Section III, Division 1.

NPT Certificate of Authorization No. N 2058 Expires 3/24/99

Date 11/27/96 Name CRANE CO.: CHEMPUMP DIVISION (NPT Certificate Holder) Signed [signature] (authorized representative)

CERTIFICATE OF INSPECTION

I, the undersigned, holding a valid commission issued by the National Board of Boiler and Pressure Vessel Inspectors and the State or Province of PENNSYLVANIA and employed by H.S.B.I. & I. CO. of HARTFORD, CONN. have inspected these items described in this Data Report on 11/27/96, and state that to the best of my knowledge and belief, the Certificate Holder has fabricated these parts or appurtenances in accordance with the ASME Code, Section III, Division 1. Each part listed has been authorized for stamping on the date shown above.

By signing this certificate, neither the inspector nor his employer makes any warranty, expressed or implied, concerning the equipment described in this Data Report. Furthermore, neither the inspector nor his employer shall be liable in any manner for any personal injury or property damage or loss of any kind arising from or connected with this inspection.

Date 11/27/96 Signed [signature] (Authorized Inspector) Commissions PA 2372 (Nat'l. Bd. (incl. endorsements) and state or prov. and no.)

S/N: 9527734-1
MODEL: DEMING FIG.3065 SIZE A05
CUSTOMER PO: 249007
ID: 58167200
PAGE: 4a

SATISFACTORY ✓ UNSATISFACTORY ____
[signature] II 12/19/96
RECEIPT INSPECTOR / LEVEL / DATE

PLAN NO. 2-2157

Philip Smith 8/5/08

CRANE® CHEMPUMP

TEL: (215) 343-6000
FAX: (215) 343-3873

DIVISION OF CRANE PUMPS & SYSTEMS, INC. • 175 TITUS AVENUE • WARRINGTON, PA 18976-2495

FORM N-2 S/N: 9527734-1

1. MANUFACTURED AND CERTIFIED BY CRANE CO.; CHEMPUMP DIVISION; 175 TITUS AVE.; WARRINGTON, PA. 18976
2. MANUFACTURED FOR WASHINGTON PUBLIC POWER SUPPLY SYSTEM; RICHLAND, WA 99352
3. LOCATION OF INSTALLATION: WNP-2 NORTH POWER PLANT LOOP; RICHLAND, WA 99352

LINES #4 & #8

ITEM	SPECIFICATION	TENSILE*	ACT./REQ.*	DRAWING
1. PUMP CASING	SA 351 CF8M	17,500	.320/.052	D-25836
2. SUCTION FLANGE	SA 182 316	18,800	.320/.052	D-25836
3. HEX PLUG- 1/2 NPT	SA 182 316	18,800	N/A	A-39655
4. HEX PLUG- 1/4 NPT	SA 182 316	18,800	N/A	A-39655

REVIEWED BY: Ronald L. Snyder DATE: 11/27/96
CERTIFICATE HOLDER

Scott R. Leley DATE: 11/27/96
A.N.I.

* INFORMATION FROM P. ANDERSON, NUCLEAR ENGINEER

S/N: 9527734-1
MODEL: DEMING FIG.3065 SIZE A05
CUSTOMER PO: 249007
ID: 58167200
PAGE: 5

PLAN No 2-2158

ENERGY NORTHWEST
People · Vision · Solutions

FORM NIS-2 OWNER'S REPORT FOR REPAIR/REPLACEMENT ACTIVITY
As Required By The Provisions Of The ASME Code Section XI

1. Owner: Energy Northwest
Address: Columbia Generating Station, North Power Plant Loop, Richland, Washington, 99352
2. Plant: Columbia Generating Station
Address: Columbia Generating Station, North Power Plant Loop, Richland, Washington, 99352

Date: 04/15/2009
Sheet: 1 Of 1
Unit: Not Applicable

3. (a) Work Performed By: Energy Northwest
(b) Repair/Replacement Organization P.O. No, Job No, etc.: Energy Northwest
(c) Type Code Symbol Stamp: Not Applicable
(d) Certificate Of Authorization No.: Not Applicable
(e) Expiration Date: Not Applicable
4. Identification Of System: Service Water (SW) System
5. (a) Applicable Construction Code: ASME Section III, Code Class 3, 1971 Edition with Winter 1973 Addenda, Code Case: Note 1
(b) Applicable Edition Of ASME Section XI Used For Repair/Replacement Activity: 2001 Edition with 2003 Addenda
(c) Applicable ASME Section XI Case(s): None
6. Identification Of Components

Name Of Component	Name Of Manufacturer	Manufacturer's Serial No	National Board No	Other I.D.	Year Built	Corrected, Removed Or Installed	ASME Code Stamped (Yes Or No) Code Class
SW(1)-2	WPPSS*	SW(1)-2-P1	N/A	N/A	1983	See Item 7 Below	Yes, Code Class 3
CCH-RV-2A	Crosby	N63032-02-0061	N/A	N/A	2007	Removed	Yes, Code Class 3
CCH-RV-2A	Crosby	N63032-00-0060	N/A	N/A	1995	Installed	Yes, Code Class 3

7. Description Of Work Performed: Replaced existing relief valve CCH-RV-2A. The replacement work was performed as follows:
1) Removed existing relief valve CCH-RV-2A, Serial No N63032-02-0061.
2) Installed replacement relief valve CCH-RV-2A, Serial No N63032-00-0060.

NOTES -
1) The applicable ASME Code Cases, if any are listed on the ASME Code Data Reports.
2) * Company name changed from Washington Public Power Supply System (WPPSS) to Energy Northwest in 1999.
3) The existing ASME Code Stamped piping system in which the replacement valve CCH-RV-2A, Serial No N63032-00-0060 was installed is Service Water (SW) piping system SW(1)-2-P1. This piping system is certified to comply with ASME Section III, Code Class 3, 1971 Edition with Winter 1973 Addenda requirements.
4) The replacement valve CCH-RV-2A, Serial No N63032-00-0060 is certified to comply with ASME Section III, Code Class 3, 1977 Edition with Summer 1977 Addenda requirements.

PLAN No 2-2158

ENERGY NORTHWEST
People · Vision · Solutions

FORM NIS-2 OWNER'S REPORT FOR REPAIR/REPLACEMENT ACTIVITY (Back)

8 Tests Conducted: Hydrostatic [ ] **Pneumatic** [ ] **Nominal Operating Pressure** [ ] **Other** [ ]
Exempt [X] **Test Pressure:** Psig **Test Temperature:** °F

9. Remarks (Applicable Manufacturer's Data Reports to be attached): See attached NV-1 Code Data Report for the replacement valve CCH-RV-2A, Serial No N63032-00-0060.

CERTIFICATE OF COMPLIANCE

I certify that the statements made in this Owner's Report are correct and that this conforms to the requirements of the ASME Code, Section XI.
Type Code Symbol Stamp: Not Applicable
Certificate Of Authorization No.: Not Applicable
Expiration Date: Not Applicable

Prepared By Kuldip Singh - Program Lead Engineer (PLE) ***Signed By*** Kuldip Singh - Program Lead Engineer (PLE)

Date 4/15/09 ***Date*** 4/15/09

CERTIFICATE OF INSERVICE INSPECTION

I, the undersigned, holding a valid commission issued by the National Board of Boiler and Pressure Vessel Inspectors and the State of Washington ***and employed by*** Hartford Steam Boiler Of Connecticut of Hartford, Connecticut ***have inspected the components described in this Owner's Report during the period*** 8/19/2008 ***to*** 4/24/2009 ***and state to the best of my knowledge and belief, the Owner has performed examinations and taken corrective measures described in this Owner's Report in accordance with the requirements of the ASME Code, Section XI.***
By signing this certificate neither the inspector nor his employer makes any warranty, expressed or implied, concerning the examinations and corrective measures described in this Owner's Report. Furthermore, neither the inspector nor his employer shall be liable in any manner for any personal injury or property damage or a loss of any kind arising from or connected with this inspection.

Inspector's Signature ***Commissions*** 13177 WANI
National Board, State, and Endorsements

Date 4/24/2009

PCAN NO. 2-2158.

CROSBY

CROSBY VALVE & GAGE COMPANY
WRENTHAM, MA

Q.C.-44D-1A
SHEET 1 OF 2

FORM NV-1, N CERTIFICATE HOLDERS' DATA REPORT FOR SAFETY AND SAFETY RELIEF VALVES
As Required by the Provisions of the ASME Code, Section III, Division 1

1. Manufactured by Crosby Valve & Gage Company 43 Kendrick St. Wrentham, MA 02093
(Name and Address of N Certificate Holder)
Crosby Factory Order No. NV5000273 Customer Order No. 243528

2. Manufactured for WASHINGTON PUBLIC POWER SUPPLY RICHLAND,WA 99352
(Name and Address of Purchaser or Owner)

3. Location of Installation NORTH POWER PLANT LOOP RICHLAND,WA 99352
(Name and Address)

4. — (CRN) DS-C-B63032 REV.B (Drawing No.) — (Nat'l Brd. No.) 1995 (Year Built)

5. Valve JMB-WR (Model No., Series No.) Identifying Nos. N63032-00-0060 (N Certificate Holder's Serial No.)
Type RELIEF Valve I.D./Tag No. SPARE

Orifice Size 0.327 Inch Nominal Inlet Size 3/4 Inch Outlet Size 1 Inch

6. Set Pressure 150 105 F
Rated Relieving Temperature
Stamped Capacity 18 GPM WTR @70 DEG. @ 10 % Overpressure — Blowdown (psig) 10 % OF SP
Hydrostatic Test (psig) Inlet 225 Outlet 100
(Applicable to Valves for Closed Systems Only)

PRESSURE RETAINING PIECES CCH-RV-2A, S/N N63032-00-0060

	Serial No. Identification	Material Specification Including Type or Grade
a. Castings		
Body	—	—
Bonnet	—	—
b. Bar Stock & Forgings		
Nozzle	—	—
Disc	N93001-38-0178	ASME SA479 T316
	N91098-40-4505	
Spring Washers	N91098-40-4506	ASME SA479 T410
Adjusting Bolt	N92379-70-0626	ASME SA193 GR.B6
Spindle	N90221-47-0885	ASME SA193 GR.B6
c. Spring	NX2797-0998	ASTM A229 CL.1
d. Bolting	—	—
e. Other Pieces		
BASE	N92799-40-0111	ASME SA479 T316
CYLINDER	N93004-35-0091	ASME SA216 GR.WCB

CERTIFICATE OF COMPLIANCE

We certify that the statements made in this report are correct and that this valve conforms to the rules of construction of the ASME Code for Nuclear Power Plant Components, Section III, Div. 1 1977 Edition, (Date)
Addenda SUMMER 1977, Code Case No.-_____.
(Date)

Class 3

Date 2 May 95 Signed Crosby Valve & Gage Company by [signature]
(N Certificate Holder)

Our ASME Certificate of Authorization No. 1878 to use the NV symbol expires 30 SEP 95.
(Date)

CERTIFICATE OF DESIGN

Design information on file at Crosby Valve & Gage Company
Stress analysis report (Class 1 only) on file at ---

Design specifications certified by* VENKATACHALAN MANI
PE State WA Reg No. 15065
Stress Report Certified by* ---
PE State --- Reg No. ---

*Signature not required - list name only.

CERTIFICATE OF SHOP INSPECTION

I, the undersigned, holding a valid commission issued by the National Board of Boiler and Pressure Vessel Inspectors and the State or Province of Massachusetts and employed by * Arkwright Mutual Insurance Co. of Norwood, Massachusetts have inspected the pump, or valve, described in this Data Report on May 2, 1995 and state that to the best of my knowledge and belief, the N Certificate Holder has constructed this pump, or valve, in accordance with the ASME Code for Nuclear Power Plant Components.

By signing this certificate, neither the Inspector nor his employer makes any warrant, expressed or implied, concerning the equipment described in this Data Report. Furthermore, neither the Inspector nor his employer shall be liable in any manner for any personal injury or property damage or a loss of any kind arising from or connected with this inspection.

Factory Mutual Systems

Date 5/2, 1995.

Signed [signature] Commissions 14 1455
(Inspector) (Nat'l. Bd., State, Prov. and No.)

*Factory Mutual System

PLAN No 2-2159

ENERGY NORTHWEST
People · Vision · Solutions

FORM NIS-2 OWNER'S REPORT FOR REPAIR/REPLACEMENT ACTIVITY
As Required By The Provisions Of The ASME Code Section XI

Date: 06/08/2009
Sheet: 1 Of 1
Unit: Not Applicable

1. **Owner:** Energy Northwest
   Address: Columbia Generating Station, North Power Plant Loop, Richland, Washington, 99352
2. **Plant:** Columbia Generating Station
   Address: Columbia Generating Station, North Power Plant Loop, Richland, Washington, 99352
3. **(a) Work Performed By:** Energy Northwest
   (b) Repair/Replacement Organization P.O. No, Job No, etc.: Energy Northwest
   (c) Type Code Symbol Stamp: Not Applicable
   (d) Certificate Of Authorization No.: Not Applicable
   (e) Expiration Date: Not Applicable
4. **Identification Of System:** Service Water (SW) System
5. **(a) Applicable Construction Code:** ASME Section III, Code Class 3, 1971 Edition with Winter 1973 Addenda, Code Case: Note 1
   (b) Applicable Edition Of ASME Section XI Used For Repair/Replacement Activity: 2001 Edition with 2003 Addenda
   (c) Applicable ASME Section XI Case(s): None
6. **Identification Of Components**

Name Of Component	Name Of Manufacturer	Manufacturer's Serial No	National Board No	Other I.D.	Year Built	Corrected, Removed Or Installed	ASME Code Stamped (Yes Or No) Code Class
SW(21)-2	WPPSS *	SW(21)-2-P1	N/A	N/A	1983	See Item 7 Below	Yes, Code Class 3
SW-RV-001A	Crosby	N67441-00-0001	N/A	N/A	1983	Removed	Yes, Code Class 3
SW-RV-001A	Crosby	N67441-00-0003	N/A	N/A	1991	Installed	Yes, Code Class 3

7. **Description Of Work Performed:** Replaced existing relief valve SW-RV-001A. The replacement work was performed as follows:
   1) Removed existing relief valve SW-RV-001A, Serial No. N67441-00-0001.
   2) Installed replacement relief valve SW-RV-001A, Serial No N67441-00-0003.

NOTES

1) The applicable ASME Code Cases, if any are listed on the ASME Code Data Reports.
2) * Company name changed from Washington Public Power Supply System (WPPSS) to Energy Northwest in 1999.
3) The existing ASME Code Stamped piping system in which the replacement valve SW-RV-001A, Serial No N67441-00-0003 was installed is Service Water (SW) piping system SW(21)-2-P1. This piping system is certified to comply with ASME Section III, Code Class 3, 1971 Edition with Winter 1973 Addenda requirements.
4) The replacement valve SW-RV-001A, Serial No N67441-00-0003 is certified to comply with ASME Section III, Code Class 3, 1974 Edition with Summer 1975 Addenda requirements.

PLAN No 2-2159

ENERGY NORTHWEST
People · Vision · Solutions

FORM NIS-2 OWNER'S REPORT FOR REPAIR/REPLACEMENT ACTIVITY (Back)

8 Tests Conducted: Hydrostatic [ ] **Pneumatic** [ ] **Nominal Operating Pressure** [ ] **Other** [X]
Exempt [ ] **Test Pressure:** Psig **Test Temperature:** °F

9. Remarks (Applicable Manufacturer's Data Reports to be attached): See attached NV-1 Code Data Report for the replacement relief valve SW-RV-001A, Serial No N67441-00-0003.

CERTIFICATE OF COMPLIANCE

I certify that the statements made in this Owner's Report are correct and that this conforms to the requirements of the ASME Code, Section XI.
Type Code Symbol Stamp: Not Applicable
Certificate Of Authorization No.: Not Applicable
Expiration Date: Not Applicable

Prepared By Kuldip Singh - Program Lead Engineer (PLE) ***Signed By*** Kuldip Singh - Program Lead Engineer (PLE)

Date 6/8/09 ***Date*** 6/8/09

CERTIFICATE OF INSERVICE INSPECTION

I, the undersigned, holding a valid commission issued by the National Board of Boiler and Pressure Vessel Inspectors and the State of Washington ***and employed by*** Hartford Steam Boiler Of Connecticut of Hartford, Connecticut ***have inspected the components described in this Owner's Report during the period*** 10/08/2008 ***to*** 4/11/2009 ***and state to the best of my knowledge and belief, the Owner has performed examinations and taken corrective measures described in this Owner's Report in accordance with the requirements of the ASME Code, Section XI.***
By signing this certificate neither the Inspector nor his employer makes any warranty, expressed or implied, concerning the examinations and corrective measures described in this Owner's Report. Furthermore, neither the Inspector nor his employer shall be liable in any manner for any personal injury or property damage or a loss of any kind arising from or connected with this inspection.

Inspector's Signature ***Commissions*** 13172 WANI
National Board, State, and Endorsements

Date 4/11/2009

PLAN No. 2-2159.

CROSBY

CROSBY VALVE & GAGE COMPANY
WRENTHAM, MASS

Philip Eiff
Q.C.-MC-1
6/8/09.

FORM NV-1 FOR SAFETY AND SAFETY RELIEF VALVES
As required by the Provisions of the ASME Code Rules

DATA REPORT
Safety and Safety Relief Valves

1. Manufactured By Crosby Valve & Gage Co., 43 Kendrick St., Wrentham, MA 02093
Name and Address

Model No. JR-WR Order No N06360 Contract Date 3/7/90 National Board No. —

2. Manufactured For Washington Public Power Supply System PO Box 968 Richland, WA 99352-0968 Order No. 204649
Name and Address

3. Owner Washington Public Power Supply System
Name and Address

4. Location of Plant Hanford II SW-RV-001A, S/N N67441-00-0003

5. Valve Identification MPL E12B001 Serial No. N67441-00-0003 Drawing No. DS-C-67441 Rev. 0

Type Relief (Safety, Safety Relief, Pilot, Power Actuated) Orifice Size .280 Inch Pipe Size -- Inch Inlet 3/4 Inch Outlet 1 Inch

6. Set Pressure (PSIG) 275 480° F
Design Rated Temperature

Stamped Capacity 15 GPM WTR @ 70°F @ 10 % Overpressure — Blowdown (PSIG) 15% of SP

Hydrostatic Test (PSIG) Inlet 750 Complete Valve 225

7. The material, design, construction and workmanship comply with ASME Code, Section III.

Class 3 Edition 1974, Addenda Date SUMMER 1975, Case No. 1711 1567&N242-1

Pressure Containing or Pressure Retaining Components

	Serial No. Identification	Material Specification Including Type or Grade
a. Castings		
Body		
~~Bonnet~~ Cylinder	N91851-35-0026	ASME SA 216 Gr. WCB
b. Bar Stock and Forgings		
Support Rods		
~~Bonnet~~ Base	N91850-39-0032	ASME SA 479 Type 316
Disc	N91855-46-0091	ASME SB 164 CL. A
Spring Washers	N92220-37-0088 N92220-37-0089	ASME SA 193 Gr. B6
Adjusting Bolt	N92221-35-0029	ASME SA 193 Gr. B6
Spindle K51719-40-0035	N92219-40-0035	ASME SA 193 Gr. B6

CROSBY VALVE & GAGE COMPANY

	Serial No. or Identification	Material Specification Including Type or Grade
c. Spring	NX4691-0005	ASTM B 166
d. Bolting		
e. Other Parts such as Pilot Components		

We certify that the statements made in this report are correct.

Date Jan 15 19 91 Signed Crosby Valve & Gage Co. (Manufacturer) By Lawrence [illegible]

Certificate of Authorization No. 1878 expires September 30, 1992

CERTIFICATE OF SHOP INSPECTION

I, the undersigned, holding a valid commission issued by the National Board of Boiler and Pressure Vessel Inspectors and the State or Province of Mass. and employed by Arkwright Mutual Insurance Company have inspected the equipment described in this Data Report on 1-16 19 91 and state that to the best of my knowledge and belief, the Manufacturer has constructed this equipment in accordance with the applicable Subsections of ASME Section III.

By signing this certificate, neither the Inspector nor his employer makes any warranty, expressed or implied, concerning the equipment described in this Data Report. Furthermore, neither the Inspector nor his employer shall be liable in any manner for any personal injury or property damage or a loss of any kind arising from or connected with this inspection.

Date 1-16 19 91 Factory Mutual System

[illegible] (Inspector) Commissions MA 1207 (National Board, State, Province and No.)

2 4 2 0 1 1 0 8 8

PLAN No 2-2160

ENERGY NORTHWEST
People·Vision·Solutions

FORM NIS-2 OWNER'S REPORT FOR REPAIR/REPLACEMENT ACTIVITY
As Required By The Provisions Of The ASME Code Section XI

1. Owner: Energy Northwest
Address: Columbia Generating Station, North Power Plant Loop, Richland, Washington, 99352
2. Plant: Columbia Generating Station
Address: Columbia Generating Station, North Power Plant Loop, Richland, Washington, 99352

Date: 06/26/2009
Sheet: 1 Of 1
Unit: Not Applicable

3. (a) Work Performed By: Energy Northwest
(b) Repair/Replacement Organization P.O. No, Job No, etc.: Energy Northwest
(c) Type Code Symbol Stamp: Not Applicable
(d) Certificate Of Authorization No.: Not Applicable
(e) Expiration Date: Not Applicable
4. Identification Of System: Service Water (SW) System
5. (a) Applicable Construction Code: ASME Section III, Code Class 3, 1971 Edition with Winter 1973 Addenda, Code Case: Note 1
(b) Applicable Edition Of ASME Section XI Used For Repair/Replacement Activity: 2001 Edition with 2003 Addenda
(c) Applicable ASME Section XI Case(s): None
6. Identification Of Components

Name Of Component	Name Of Manufacturer	Manufacturer's Serial No	National Board No	Other I.D.	Year Built	Corrected, Removed Or Installed	ASME Code Stamped (Yes Or No) Code Class
SW(22)-2	WPPSS *	SW(22)-2-P1	N/A	N/A	1983	See Item 7 Below	Yes, Code Class 3
SW-RV-001B	Crosby	N67441-00-0002	N/A	N/A	1983	Removed	Yes, Code Class 3
SW-RV-001B	Crosby	N67441-00-0004	N/A	N/A	1991	Installed	Yes, Code Class 3

7. Description Of Work Performed: Replaced existing relief valve SW-RV-001B. The replacement work was performed as follows:
1) Removed existing relief valve SW-RV-001B, Serial No. N67441-00-0002.
2) Installed replacement relief valve SW-RV-001B, Serial No N67441-00-0004.

NOTES -
1) The applicable ASME Code Cases, if any are listed on the ASME Code Data Reports.
2) * Company name changed from Washington Public Power Supply System (WPPSS) to Energy Northwest in 1999.
3) The existing ASME Code Stamped piping system in which the replacement valve SW-RV-001B, Serial No N67441-00-0004 was installed is Service Water (SW) piping system SW(22)-2-P1. This piping system is certified to comply with ASME Section III, Code Class 3, 1971 Edition with Winter 1973 Addenda requirements.
4) The replacement valve SW-RV-001B, Serial No N67441-00-0004 is certified to comply with ASME Section III, Code Class 3, 1974 Edition with Summer 1975 Addenda requirements.

PLAN No 2-2160

ENERGY NORTHWEST
People·Vision·Solutions

FORM NIS-2 OWNER'S REPORT FOR REPAIR/REPLACEMENT ACTIVITY (Back)

8 Tests Conducted: Hydrostatic [ ] Pneumatic [ ] Nominal Operating Pressure [ ] Other [ ]
Exempt [X] Test Pressure: Psig Test Temperature: °F

9. Remarks (Applicable Manufacturer's Data Reports to be attached): See attached NV-1 Code Data Report for the replacement relief valve SW-RV-001B, Serial No N67441-00-0004.

CERTIFICATE OF COMPLIANCE

I certify that the statements made in this Owner's Report are correct and that this conforms to the requirements of the ASME Code, Section XI.
Type Code Symbol Stamp: Not Applicable
Certificate Of Authorization No.: Not Applicable
Expiration Date: Not Applicable

Prepared By Kuldip Singh - Program Lead Engineer (PLE) **Signed By** Kuldip Singh - Program Lead Engineer (PLE)

Date 6/26/09 **Date** 6/26/09

CERTIFICATE OF INSERVICE INSPECTION

I, the undersigned, holding a valid commission issued by the National Board of Boiler and Pressure Vessel Inspectors and the State of Washington *and employed by* Hartford Steam Boiler Of Connecticut of Hartford, Connecticut *have inspected the components described in this Owner's Report during the period* 10/9/2008 *to* 6/29/2009 *and state to the best of my knowledge and belief, the Owner has performed examinations and taken corrective measures described in this Owner's Report in accordance with the requirements of the ASME Code, Section XI.*
By signing this certificate neither the Inspector nor his employer makes any warranty, expressed or implied, concerning the examinations and corrective measures described in this Owner's Report. Furthermore, neither the Inspector nor his employer shall be liable in any manner for any personal injury or property damage or a loss of any kind arising from or connected with this inspection.

Inspector's Signature **Commissions** 13172 WANI
National Board, State, and Endorsements

Date 6/29/2009

PLAN No. 2-2160.

Rudip Singh 6/24/05.

CROSBY

CROSBY VALVE & GAGE COMPANY

WRENTHAM, MASS

FORM NV-1 FOR SAFETY AND SAFETY RELIEF VALVES
As required by the Provisions of the ASME Code Rules

QC-44C-1

DATA REPORT
Safety and Safety Relief Valves

1. Manufactured By Crosby Valve & Gage Co., 43 Kendrick St., Wrentham, MA 02093
Name and Address

Model No. JR-WR Order No. N14550 Contract Date 11/20/90 National Board No. --

2. Manufactured For Washington Public Power Supply System PO Box 968 Richland, WA 99352-0968 Order No. 213219
Name and Address

3. Owner Washington Public Power Supply System
Name and Address

4. Location of Plant Hanford 2 SW-RV-1B, S/N N67441-00-0004

5. Valve Identification E12B001 Serial No. N67441-00-0004 Drawing No. DS-C-67441 Rev. 0

Type Relief (Safety, Safety Relief, Pilot, Power Actuated) Orifice Size 0.280 Inch Pipe Size -- Inch Inlet 3/4 Inch Outlet 1 Inch

6. Set Pressure (PSIG) 275 480° F
Design Rated Temperature

Stamped Capacity 15 GPM WTR @ 70°F @ 10 % Overpressure -- Blowdown (PSIG) 15% of SP

Hydrostatic Test (PSIG) Inlet 750 Complete Valve 225

7. The material, design, construction and workmanship comply with ASME Code, Section III.

Class 3 Edition 1974, Addenda Date Summer 1975, Case No. --

Pressure Containing or Pressure Retaining Components

a. Castings	Serial No. Identification	Material Specification Including Type or Grade
Body		
~~Bonnet~~ Cylinder	N91851-36-0027	ASME SA 216 Gr. WCB
b. Bar Stock and Forgings		
Support Rods		
~~XXXXX~~ Base	N91850-40-0033	ASME SA 479 Type 316
Disc	N91855-47-0093	ASME SB 164 Cl. A
Spring Washers	N92220-38-0090 N92220-38-0092	ASME SA 193 Gr. B6
Adjusting Bolt	N92221-35-0030	ASME SA 193 Gr. B6
Spindle K61719-41-0036	N92219-41-0036	ASME SA 193 Gr. B6

VERIFIED & ACCEPTED [signature] REC. INSPECTOR
LEVEL II DATE 4-8-91

CROSBY VALVE & GAGE COMPANY

	Serial No. or Identification	Material Specification Including Type or Grade
c. Spring	NX4691-0006	ASTM B 166
d. Bolting		
e. Other Parts such as Pilot Components		

We certify that the statements made in this report are correct.

Date March 22, 19 91 Signed Crosby Valve & Gage Co. By Lawrence [illegible]
Manufacturer

Certificate of Authorization No. 1878 expires September 30, 1992

CERTIFICATE OF SHOP INSPECTION

I, the undersigned, holding a valid commission issued by the National Board of Boiler and Pressure Vessel Inspectors and the State or Province of Mass. and employed by Arkwright Mutual Insurance Company have inspected the equipment described in this Data Report on March 22 19 91 and state that to the best of my knowledge and belief, the Manufacturer has constructed this equipment in accordance with the applicable Subsections of ASME Section III.

By signing this certificate, neither the Inspector nor his employer makes any warranty, expressed or implied, concerning the equipment described in this Data Report. Furthermore, neither the Inspector nor his employer shall be liable in any manner for any personal injury or property damage or a loss of any kind arising from or connected with this inspection.

Date March 22 19 91 Factory Mutual System

[illegible] (Inspector) Commissions MA-1418
National Board, State, Province and No.)

VERIFIED & ACCEPTED [illegible]
REG. INSPECTOR

LEVEL I DATE 4-8-91

2 4 3 0 0 0 9

PLAN No 2-2161

ENERGY NORTHWEST
People·Vision·Solutions

FORM NIS-2 OWNER'S REPORT FOR REPAIR/REPLACEMENT ACTIVITY
As Required By The Provisions Of The ASME Code Section XI

1. Owner: Energy Northwest
Address: Columbia Generating Station, North Power Plant Loop, Richland, Washington, 99352
2. Plant: Columbia Generating Station
Address: Columbia Generating Station, North Power Plant Loop, Richland, Washington, 99352

Date: 07/01/2009
Sheet: 1 Of 1
Unit: Not Applicable

3. (a) Work Performed By: Energy Northwest
(b) Repair/Replacement Organization P.O. No, Job No, etc.: Energy Northwest
(c) Type Code Symbol Stamp: Not Applicable
(d) Certificate Of Authorization No.: Not Applicable
(e) Expiration Date: Not Applicable
4. Identification Of System: Standby Liquid Control (SLC) System
5. (a) Applicable Construction Code: ASME Section III, Code Class 1, 1971 Edition with Winter 1972 Addenda, Code Case: Note 1
(b) Applicable Edition Of ASME Section XI Used For Repair/Replacement Activity: 2001 Edition with 2003 Addenda
(c) Applicable ASME Section XI Case(s): None
6. Identification Of Components

Name Of Component	Name Of Manufacturer	Manufacturer's Serial No	National Board No	Other I.D.	Year Built	Corrected, Removed Or Installed	ASME Code Stamped (Yes Or No) Code Class
SLC(2)-3S	WPPSS*	SLC(2)-3S-P1	N/A	N/A	1983	See Item 7 Below	Yes, Code Class 2
SLC(2)-4S	WPPSS*	SLC(2)-4S-P1	N/A	N/A	1983	See Item 7 Below	Yes, Code Class 1
SLC-V-4A	Conax	4	91	N/A	1975	See Item 7 Below	Yes, Code Class 1
Trigger Body	Conax	5886	N/A	N/A	2000	Removed	Yes, Code Class 1
Trigger Body	Conax	7410	N/A	N/A	2007	Installed	Yes, Code Class 1
Inlet Fitting	Conax	5888	N/A	N/A	2000	Removed	Yes, Code Class 1
Inlet Fitting	Conax	7412	N/A	N/A	2007	Installed	Yes, Code Class 1

7. Description Of Work Performed: Replaced parts for the existing valve SLC-V-4A, Serial No 4, National Board No 91. The replacement work was performed as follows:

1) Removed the existing Trigger Body Subassembly Serial No 5886 from the valve.
2) Installed new replacement Trigger Body Subassembly Serial No 7410 in the valve.
3) Removed the existing Inlet Fitting Serial No 5888 from the valve.
4) Installed new replacement Inlet Fitting Serial No 7412 in the valve.
5) Reinstalled refurbished valve SLC-V-4A, Serial No 4, National Board No 91.
6) Reinstalled existing studs and nuts for the valve inlet and outlet joints.
7) Performed VT-2 visual examination during pressure test to confirm pressure boundary integrity of the joints. No evidence of leakage during the pressure test.

NOTES -

1) The applicable ASME Code Cases, if any are listed on the ASME Code Data Reports.
2) * Company name changed from Washington Public Power Supply System (WPPSS) to Energy Northwest (EN) in 1999.
3) The existing ASME Code Stamped piping system in which the existing valve SLC-V-4A, Serial No 4, National Board No 91 was reinstalled is Standby Liquid Control (SLC) piping system SLC(2)-4S-P1 for the RPV side. This piping system is certified to comply with ASME Section III, Code Class 1, 1971 Edition with Winter 1973 Addenda requirements.
4) The existing ASME Code Stamped piping system in which the existing valve SLC-V-4A, Serial No 4, National Board No 91 was reinstalled is Standby Liquid Control (SLC) piping system SLC(2)-3S-P1 for the pump side. This piping system is certified to comply with ASME Section III, Code Class 2, 1971 Edition with Winter 1973 Addenda requirements.
5) ASME Section III, Code Class 1, 1971 Edition with Winter 1972 Addenda for the existing valve SLC-V-4A, Serial No 4, National Board No 91.
6) ASME Section III, Code Class 1, 1977 Edition with Summer 1977 Addenda for the new replacement Trigger Body Subassembly Serial No 7410. The new replacement Trigger Body Subassembly certified to 1977 Edition with Summer 1977 Addenda is acceptable for use in the existing valve certified to 1971 Edition with Winter 1972 Addenda.
7) ASME Section III, Code Class 1, 1977 Edition with Summer 1977 Addenda for the new replacement Inlet Fitting Serial No 7412. The new replacement Inlet Fitting certified to 1977 Edition with Summer 1977 Addenda is acceptable for use in the existing valve certified to 1971 Edition with Winter 1972 Addenda.

PLAN No 2-2161

ENERGY NORTHWEST
People·Vision·Solutions

FORM NIS-2 OWNER'S REPORT FOR REPAIR/REPLACEMENT ACTIVITY (Back)

8 Tests Conducted: Hydrostatic [ ] **Pneumatic** [ ] **Nominal Operating Pressure** [X] **Other** [ ]
Exempt [ ] **Test Pressure:** 1180/1180Psig **Test Temperature:** 80° F

9. Remarks (Applicable Manufacturer's Data Reports to be attached): 1) See attached N-2 Code Data Reports for the following new replacement valve parts:

Valve Part	Serial No
Trigger Body Subassembly	7410
Inlet Fitting	7412

2) Test pressure on the down stream side of valve SLC-V-4A (RPV Side) - Test pressure of 1180 Psig and test temperature of 80° F.
3) Test pressure on the up stream side of valve SLC-V-4A (SLC-P-1A Side) - Test pressure of 1180 Psig and test temperature of 80° F.

CERTIFICATE OF COMPLIANCE

I certify that the statements made in this Owner's Report are correct and that this conforms to the requirements of the ASME Code, Section XI.
Type Code Symbol Stamp: Not Applicable
Certificate Of Authorization No.: Not Applicable
Expiration Date: Not Applicable

Prepared By Kuldip Singh - Program Lead Engineer (PLE) ***Signed By*** Kuldip Singh - Program Lead Engineer (PLE)

Date 7/1/09 ***Date*** 7/1/09

CERTIFICATE OF INSERVICE INSPECTION

I, the undersigned, holding a valid commission issued by the National Board of Boiler and Pressure Vessel Inspectors and the State of Washington ***and employed by*** Hartford Steam Boiler Of Connecticut of Hartford, Connecticut ***have inspected the components described in this Owner's Report during the period*** 9/22/2008 ***to*** 7/17/2009 ***and state to the best of my knowledge and belief, the Owner has performed examinations and taken corrective measures described in this Owner's Report in accordance with the requirements of the ASME Code, Section XI.***
By signing this certificate neither the Inspector nor his employer makes any warranty, expressed or implied, concerning the examinations and corrective measures described in this Owner's Report. Furthermore, neither the Inspector nor his employer shall be liable in any manner for any personal injury or property damage or a loss of any kind arising from or connected with this inspection.

Inspector's Signature ***Commissions*** 13172 WANI
National Board, State, and Endorsements

Date 7/17/2009

PLAN NO. 2-2161
Philip Smith
6/26/09. 005

FORM N-2 CERTIFICATE HOLDERS' DATA REPORT FOR IDENTICAL NUCLEAR PARTS AND APPURTENANCES*

As Required by the Provisions of the ASME Code, Section III

Not to Exceed One Day's Production

1. Manufactured and certified by: IST Conax Nuclear, Inc. 402 Sonwil Drive, Cheektowaga, NY 14225 (name and address of NPT Certificate Holder)

2. Manufactured for: Energy Northeast, Richland, WA99352 (name and address of Purchaser)

3. Location of installation: Columbia Generating Station, Richland, WA99352 (name and address)

4. Type:

N20000, Rev. G	SA479/304SST	75 KSI N/A	N/A	2007
(drawing no.)	(mat'l spec. no.)	(tensile strength)	(CRN)	(year built)

5. ASME Code, Section III, Division 1:

77	Summer 77	1	N/A
(edition)	(addenda date)	(class)	(Code Case no.)

6. Fabricated in accordance with Const. Spec. (Div. 2 only) _____ (no.) Revision _____ Date _____

7. Remarks: Trigger Body Subassembly for explosive actuated valve replacememt kit for Standby Liquid Control System

Para. NB-2121 (b) is applicable to ram. Press fit/seal on .328 & .4375 diameters. Overall subassembly length is 2.5".

Pressure Test at 2800 psi for 10 minutes.

8. Nom. thickness (in.) See remarks Min. design thickness (in.) See remarks Dia. ID (ft & in.) See remarks Length overall (ft & in.) See remarks

9. When applicable, Certificate Holders' Data Reports are attached for each item of this report:

	Part or Appurtenance Serial Number	National Board No. in Numerical Order		Part or Appurtenance Serial Number	National Board No. in Numerical Order
(1)	7409	7409	(26)		
(2)	7410	7410	(27)		
(3)			(28)		
(4)			(29)		
(5)			(30)		
(6)	SLC-V-4A,	TRIGGER	(31)		
(7)			(32)		
(8)			(33)		
(9)	S/N 7410.		(34)		
(10)			(35)		
(11)			(36)		
(12)			(37)		
(13)			(38)		
(14)			(39)		
(15)			(40)		
(16)			(41)		
(17)			(42)		
(18)			(43)		
(19)			(44)		
(20)			(45)		
(21)			(46)		
(22)			(47)		
(23)			(48)		
(24)			(49)		
(25)			(50)		

10. Design pressure 1500 psi. Temp. 150 °F. Hydro. test pressure * See Remarks at temp. °F (when applicable)

*Supplemental information in the form of lists, sketches, or drawings may be used provided (1) size is 8½ x 11, (2) information in items 2 and 3 on this Data Report is included on each sheet, (3) each sheet is numbered and the number of sheets is recorded at the top of this form.

Certificate Holder's Serial Nos. 7409 through 7410

CERTIFICATION OF DESIGN

Design specifications certified by **George I. Skoda** (when applicable) P.E. State **CA** Reg. no. **15847**

Design report* certified by **Francis J. Domino** (when applicable) P.E. State **NY** Reg. no. **36832**

CERTIFICATE OF COMPLIANCE

We certify that the statements made in this report are correct and that this (these) **Trigger Body Subassembly** conforms to the rules of construction of the ASME Code, Section III, Division 1.

NPT Certificate of Authorization No. **N-1850** Expires **September 3, 2007**

Date 1/26/2007 Name **IST-Conax Nuclear** (NPT Certificate Holder) Signed Paul E Couchman (authorized representative)

CERTIFICATE OF INSPECTION

I, the undersigned, holding a valid commission issued by the National Board of Boiler and Pressure Vessel Inspectors and the State or Province of **New York** and employed by **HSB CT** of **Hartford, CT** have inspected these items described in this Data Report on 26 JAN. 2007, and state that to the best of my knowledge and belief, the Certificate Holder has fabricated these parts or appurtenances in accordance with the ASME Code, Section III, Division 1. Each part listed has been authorized for stamping on the date shown above.
By signing this certificate, neither the inspector nor his employer makes any warranty, expressed or implied, concerning the equipment described in this Data Report. Furthermore, neither the inspector nor his employer shall be liable in any manner for any personal injury or property damage or loss of any kind arising from or connected with this inspection.

Date 01-26-07 Signed (Authorized Inspector) Commissions **NB 10964AN NY 5057** [Nat'l Bd. (incl. endorsements) and state or prov. and no.]

PLAN No. 2-2161

FORM N-2 CERTIFICATE HOLDERS' DATA REPORT FOR IDENTICAL NUCLEAR PARTS AND APPURTENANCES*

As Required by the Provisions of the ASME Code, Section III

Not to Exceed One Day's Production

Quality Supply 007 6/26/05.

1. Manufactured and certified by IST Conax Nuclear, Inc. 402 Sonwil Drive, Cheektowaga, NY 14225
(name and address of NPT Certificate Holder)

2. Manufactured for Energy Northeast, Richland, WA 99352
(name and address of Purchaser)

3. Location of installation Columbia Generating Station,Richland, WA 99352
(name and address)

4. Type: N38017 Rev. F (drawing no.) | SA479/304SST (mat'l spec. no.) | 75 KSI N/A (tensile strength) | N/A (CRN) | 2007 (year built)

5. ASME Code, Section III, Division 1: 77 (edition) | Summer 77 (addenda date) | 1 (class) | N/A (Code Case no.)

6. Fabricated in accordance with Const. Spec. (Div. 2 only) _____ (no.) Revision _____ Date _____

7. Remarks: Inlet Fitting for explosive actuated valve replacement kit for Standby Liquid Control System

Pressure Test at 2800 psi for 10 minutes

8. Nom. thickness (in.) .040" Min. design thickness (in.) .031" Dia. ID (ft & in.) .815" Length overall (ft & in.) 2.245"

9. When applicable, Certificate Holders' Data Reports are attached for each item of this report:

	Part or Appurtenance Serial Number	National Board No. in Numerical Order
(1)	7411	7411
(2)	7412	7412
(3)		
(4)		
(5)		
(6)		
(7)	SLC-V-4A,	INLET FITTING
(8)		
(9)		
(10)	S/N 7412	
(11)		
(12)		
(13)		
(14)		
(15)		
(16)		
(17)		
(18)		
(19)		
(20)		
(21)		
(22)		
(23)		
(24)		
(25)		

	Part or Appurtenance Serial Number	National Board No. in Numerical Order
(26)		
(27)		
(28)		
(29)		
(30)		
(31)		
(32)		
(33)		
(34)		
(35)		
(36)		
(37)		
(38)		
(39)		
(40)		
(41)		
(42)		
(43)		
(44)		
(45)		
(46)		
(47)		
(48)		
(49)		
(50)		

Design pressure 1500 psi. Temp 150 °F. Hydro. test pressure * See Remarks at temp. °F (when applicable)

*Supplemental information in the form of lists, sketches, or drawings may be used provided (1) size is 8½ x 11, (2) information in items 2 and 3 on this Data Report is included on each sheet, (3) each sheet is numbered and the number of sheets is recorded at the top of this form.

Certificate Holder's Serial Nos. 7411 through 7412

CERTIFICATION OF DESIGN

Design specifications certified by **George I. Skoda** (when applicable) P.E. State **CA** Reg. no. **15847**

Design report* certified by **Francis J. Domino** (when applicable) P.E. State **NY** Reg. no. **36832**

CERTIFICATE OF COMPLIANCE

We certify that the statements made in this report are correct and that this (these) **Inlet Fitting** conforms to the rules of construction of the ASME Code, Section III, Division 1.

NPT Certificate of Authorization No. **N-1850** Expires **September 3, 2007**

Date 1/26/2007 Name **IST-Conax Nuclear** (NPT Certificate Holder) Signed Paul Elouchm (authorized representative)

CERTIFICATE OF INSPECTION

I, the undersigned, holding a valid commission issued by the National Board of Boiler and Pressure Vessel Inspectors and the State or Province of **New York** and employed by **HSB CT** of **Hartford, CT** have inspected these items described in this Data Report on 26 JAN 2007, and state that to the best of my knowledge and belief, the Certificate Holder has fabricated these parts or appurtenances in accordance with the ASME Code, Section III, Division 1. Each part listed has been authorized for stamping on the date shown above.
By signing this certificate, neither the inspector nor his employer makes any warranty, expressed or implied, concerning the equipment described in this Data Report. Furthermore, neither the inspector nor his employer shall be liable in any manner for any personal injury or property damage or loss of any kind arising from or connected with this inspection.

Date 01-26-07 Signed (Authorized Inspector) Commissions **NB 10964AN NY 5067** [Nat'l Bd. (incl. endorsements) and state or prov. and no.]

PLAN No 2-2162

ENERGY NORTHWEST
People·Vision·Solutions

FORM NIS-2 OWNER'S REPORT FOR REPAIR/REPLACEMENT ACTIVITY
As Required By The Provisions Of The ASME Code Section XI

1. Owner: Energy Northwest
Address: Columbia Generating Station, North Power Plant Loop, Richland, Washington, 99352
2. Plant: Columbia Generating Station
Address: Columbia Generating Station, North Power Plant Loop, Richland, Washington, 99352

Date: 07/23/2009
Sheet: 1 Of 1
Unit: Not Applicable

3. (a) Work Performed By: Energy Northwest
(b) Repair/Replacement Organization P.O. No, Job No, etc.: Energy Northwest
(c) Type Code Symbol Stamp: Not Applicable
(d) Certificate Of Authorization No.: Not Applicable
(e) Expiration Date: Not Applicable
4. Identification Of System: Reactor Pressure Vessel (RPV)
5. (a) Applicable Construction Code: ASME Section III, Code Class 1, 1971 Edition with Summer 1971 Addenda, Code Case: None
(b) Applicable Edition Of ASME Section XI Used For Repair/Replacement Activity: 2001 Edition with 2003 Addenda
(c) Applicable ASME Section XI Case(s): None
6. Identification Of Components

Name Of Component	Name Of Manufacturer	Manufacturer's Serial No	National Board No	Other I.D.	Year Built	Corrected, Removed Or Installed	ASME Code Stamped (Yes Or No) Code Class
Reactor Pressure Vessel (RPV)	CBI Nuclear	T45	8	N/A	1974	See Item 7 Below	Yes, Code Class 1

7. Description Of Work Performed: Performed additional weld contour of the nozzle safe end welds for Reactor Pressure Vessel (RPV) for ultrasonic (UT) examination. The additional weld contour of the welds was required on as needed basis to allow the UT transducer contact in order to prevent the lift off of the transducer from the weld. The as needed additional weld contour consisted of the following steps:

1) Ground the weld surfaces on as needed basis.
2) Performed liquid penetrant (PT) examination on the final ground surfaces. Liquid penetrant (PT) examination results acceptable.

The following information is for additional weld contour of the nozzle safe end welds for Reactor Pressure Vessel (RPV) for ultrasonic (UT) examination:

Joint No	ISI Weld No	PT Report No	WOT No
1	12RRC(1)-N2B-6	5-09-7-69	01145635 01

NOTES -
1) The applicable ASME Code Cases, if any are listed on the ASME Code Data Reports.

PLAN No 2-2162

ENERGY NORTHWEST
People·Vision·Solutions

FORM NIS-2 OWNER'S REPORT FOR REPAIR/REPLACEMENT ACTIVITY (Back)

8 Tests Conducted: Hydrostatic [ ] **Pneumatic** [ ] **Nominal Operating Pressure** [ ] **Other** [ ]
Exempt [X] **Test Pressure:** Psig **Test Temperature:** °F

9. Remarks (Applicable Manufacturer's Data Reports to be attached): None

CERTIFICATE OF COMPLIANCE

I certify that the statements made in this Owner's Report are correct and that this conforms to the requirements of the ASME Code, Section XI.
Type Code Symbol Stamp: Not Applicable
Certificate Of Authorization No.: Not Applicable
Expiration Date: Not Applicable

Prepared By Kuldip Singh - Program Lead Engineer (PLE) ***Signed By*** Kuldip Singh - Program Lead Engineer (PLE)

Date 7/27/09 ***Date*** 7/27/09

CERTIFICATE OF INSERVICE INSPECTION

I, the undersigned, holding a valid commission issued by the National Board of Boiler and Pressure Vessel Inspectors and the State of Washington ***and employed by*** Hartford Steam Boiler Of Connecticut of Hartford, Connecticut ***have inspected the components described in this Owner's Report during the period*** 5-4-09 ***to*** 8-12-09 ***and state to the best of my knowledge and belief, the Owner has performed examinations and taken corrective measures described in this Owner's Report in accordance with the requirements of the ASME Code, Section XI.***
By signing this certificate neither the Inspector nor his employer makes any warranty, expressed or implied, concerning the examinations and corrective measures described in this Owner's Report. Furthermore, neither the Inspector nor his employer shall be liable in any manner for any personal injury or property damage or a loss of any kind arising from or connected with this inspection.

Inspector's Signature ***Commissions*** 13324 W ANI
National Board, State, and Endorsements

Date 8-12-2009

PLAN No 2-2168

ENERGY NORTHWEST
People · Vision · Solutions

FORM NIS-2 OWNER'S REPORT FOR REPAIR/REPLACEMENT ACTIVITY
As Required By The Provisions Of The ASME Code Section XI

Date: 04/20/2009
Sheet: 1 Of 1
Unit: Not Applicable

1. Owner: Energy Northwest
Address: Columbia Generating Station, North Power Plant Loop, Richland, Washington, 99352
2. Plant: Columbia Generating Station
Address: Columbia Generating Station, North Power Plant Loop, Richland, Washington, 99352
3. (a) Work Performed By: Energy Northwest
(b) Repair/Replacement Organization P.O. No, Job No, etc.: Energy Northwest
(c) Type Code Symbol Stamp: Not Applicable
(d) Certificate Of Authorization No.: Not Applicable
(e) Expiration Date: Not Applicable
4. Identification Of System: Fuel Pool Cooling (FPC) System
5. (a) Applicable Construction Code: ASME Section III, Code Class 3, 1971 Edition with Winter 1973 Addenda, Code Case: Note 1
(b) Applicable Edition Of ASME Section XI Used For Repair/Replacement Activity: 2001 Edition with 2003 Addenda
(c) Applicable ASME Section XI Case(s): None
6. Identification Of Components

Name Of Component	Name Of Manufacturer	Manufacturer's Serial No	National Board No	Other I.D.	Year Built	Corrected, Removed Or Installed	ASME Code Stamped (Yes Or No) Code Class
FPC-P-1A	Worthington	44-000019 (3LR-9)	3	N/A	1977	See Item 7 Below	Yes, Code Class 3

7. Description Of Work Performed: Replaced studs for FPC-P-1A split casing. The replacement work was performed as follows:
1) Installed twelve (12) 3" long studs.
2) Installed four (4) 3 1/2" long studs.
3) Performed VT-2 visual examination during pressure test to confirm pressure boundary integrity of the joint. No evidence of leakage during the pressure test.

NOTES -
1) The applicable ASME Code Cases, if any are listed on the ASME Code Data Reports.

PLAN No 2-2168

ENERGY NORTHWEST
People · Vision · Solutions

FORM NIS-2 OWNER'S REPORT FOR REPAIR/REPLACEMENT ACTIVITY (Back)

8 Tests Conducted: Hydrostatic [ ] **Pneumatic** [ ] **Nominal Operating Pressure** [X] **Other** [ ]
Exempt [ ] **Test Pressure:** 28 Psig **Test Temperature:** 89° F

9. Remarks (Applicable Manufacturer's Data Reports to be attached): None

CERTIFICATE OF COMPLIANCE

I certify that the statements made in this Owner's Report are correct and that this conforms to the requirements of the ASME Code, Section XI.
Type Code Symbol Stamp: Not Applicable
Certificate Of Authorization No.: Not Applicable
Expiration Date: Not Applicable

Prepared By Kuldip Singh - Program Lead Engineer (PLE) ***Signed By*** Kuldip Singh - Program Lead Engineer (PLE)

Date 4/20/09 ***Date*** 4/20/09

CERTIFICATE OF INSERVICE INSPECTION

I, the undersigned, holding a valid commission issued by the National Board of Boiler and Pressure Vessel Inspectors and the State of Washington ***and employed by*** Hartford Steam Boiler Of Connecticut of Hartford, Connecticut ***have inspected the components described in this Owner's Report during the period*** 12/16/2008 ***to*** 4/24/2009 ***and state to the best of my knowledge and belief, the Owner has performed examinations and taken corrective measures described in this Owner's Report in accordance with the requirements of the ASME Code, Section XI.***
By signing this certificate neither the inspector nor his employer makes any warranty, expressed or implied, concerning the examinations and corrective measures described in this Owner's Report. Furthermore, neither the inspector nor his employer shall be liable in any manner for any personal injury or property damage or a loss of any kind arising from or connected with this inspection.

Inspector's Signature ***Commissions*** 13172 WAN1
National Board, State, and Endorsements

Date 4/24/2009

PLAN No 2-2169

ENERGY NORTHWEST
People·Vision·Solutions

FORM NIS-2 OWNER'S REPORT FOR REPAIR/REPLACEMENT ACTIVITY
As Required By The Provisions Of The ASME Code Section XI

1. Owner: Energy Northwest
Address: Columbia Generating Station, North Power Plant Loop, Richland, Washington, 99352
2. Plant: Columbia Generating Station
Address: Columbia Generating Station, North Power Plant Loop, Richland, Washington, 99352

Date: 07/01/2009
Sheet: 1 Of 1
Unit: Not Applicable

3. (a) Work Performed By: Energy Northwest
(b) Repair/Replacement Organization P.O. No, Job No, etc.: Energy Northwest
(c) Type Code Symbol Stamp: Not Applicable
(d) Certificate Of Authorization No.: Not Applicable
(e) Expiration Date: Not Applicable
4. Identification Of System: Standby Liquid Control (SLC) System
5. (a) Applicable Construction Code: ASME Section III, Code Class 1, 1971 Edition with Winter 1972 Addenda, Code Case: Note 1
(b) Applicable Edition Of ASME Section XI Used For Repair/Replacement Activity: 2001 Edition with 2003 Addenda
(c) Applicable ASME Section XI Case(s): None
6. Identification Of Components

Name Of Component	Name Of Manufacturer	Manufacturer's Serial No	National Board No	Other I.D.	Year Built	Corrected, Removed Or Installed	ASME Code Stamped (Yes Or No) Code Class
SLC(2)-3S	WPPSS*	SLC(2)-3S-P1	N/A	N/A	1983	See Item 7 Below	Yes, Code Class 2
SLC(2)-4S	WPPSS*	SLC(2)-4S-P1	N/A	N/A	1983	See Item 7 Below	Yes, Code Class 1
SLC-V-4B	Conax	3	90	N/A	1975	See Item 7 Below	Yes, Code Class 1
Trigger Body	Conax	5800	N/A	N/A	1999	Removed	Yes, Code Class 1
Trigger Body	Conax	7773	N/A	N/A	2009	Installed	Yes, Code Class 1
Inlet Fitting	Conax	5798	N/A	N/A	1999	Removed	Yes, Code Class 1
Inlet Fitting	Conax	7771	N/A	N/A	2009	Installed	Yes, Code Class 1

7. Description Of Work Performed: Replaced parts for the existing valve SLC-V-4B, Serial No 3, National Board No 90. The replacement work was performed as follows:

1) Removed the existing Trigger Body Subassembly Serial No 5800 from the valve.
2) Installed new replacement Trigger Body Subassembly Serial No 7773 in the valve.
3) Removed the existing Inlet Fitting Serial No 5798 from the valve.
4) Installed new replacement Inlet Fitting Serial No 7771 in the valve.
5) Reinstalled refurbished valve SLC-V-4B, Serial No 3, National Board No 90.
6) Reinstalled existing studs and nuts for the valve inlet and outlet joints.
7) Performed VT-2 visual examination during pressure test to confirm pressure boundary integrity of the joints. No evidence of leakage during the pressure test.

NOTES -

1) The applicable ASME Code Cases, if any are listed on the ASME Code Data Reports.
2) * Company name changed from Washington Public Power Supply System (WPPSS) to Energy Northwest (EN) in 1999.
3) The existing ASME Code Stamped piping system in which the existing valve SLC-V-4B, Serial No 3, National Board No 90 was reinstalled is Standby Liquid Control (SLC) piping system SLC(2)-4S-P1 for the RPV side. This piping system is certified to comply with ASME Section III, Code Class 1, 1971 Edition with Winter 1973 Addenda requirements.
4) The existing ASME Code Stamped piping system in which the existing valve SLC-V-4B, Serial No 3, National Board No 90 was reinstalled is Standby Liquid Control (SLC) piping system SLC(2)-3S-P1 for the pump side. This piping system is certified to comply with ASME Section III, Code Class 2, 1971 Edition with Winter 1973 Addenda requirements.
5) ASME Section III, Code Class 1, 1971 Edition with Winter 1972 Addenda for the existing valve SLC-V-4B, Serial No 3, National Board No 90.
6) ASME Section III, Code Class 1, 1977 Edition with Summer 1977 Addenda for the new replacement Trigger Body Subassembly Serial No 7773. The new replacement Trigger Body Subassembly certified to 1977 Edition with Summer 1977 Addenda is acceptable for use in the existing valve certified to 1971 Edition with Winter 1972 Addenda.
7) ASME Section III, Code Class 1, 1977 Edition with Summer 1977 Addenda for the new replacement Inlet Fitting Serial No 7771. The new replacement Inlet Fitting certified to 1977 Edition with Summer 1977 Addenda is acceptable for use in the existing valve certified to 1971 Edition with Winter 1972 Addenda.

PLAN No 2-2169

ENERGY NORTHWEST
People · Vision · Solutions

FORM NIS-2 OWNER'S REPORT FOR REPAIR/REPLACEMENT ACTIVITY (Back)

8 Tests Conducted: Hydrostatic [ ] **Pneumatic** [ ] **Nominal Operating Pressure** [X] **Other** [ ]
Exempt [ ] **Test Pressure:** 1180/1180Psig **Test Temperature:** 80° F

9. Remarks (Applicable Manufacturer's Data Reports to be attached): 1) See attached N-2 Code Data Reports for the following new replacement valve parts:

Valve Part	Serial No
Trigger Body Subassembly	7773
Inlet Fitting	7771

2) Test pressure on the down stream side of valve SLC-V-4B (RPV Side) - Test pressure of 1180 Psig and test temperature of 80° F.
3) Test pressure on the up stream side of valve SLC-V-4B (SLC-P-1A Side) - Test pressure of 1180 Psig and test temperature of 80° F.

CERTIFICATE OF COMPLIANCE

I certify that the statements made in this Owner's Report are correct and that this conforms to the requirements of the ASME Code, Section XI.
Type Code Symbol Stamp: Not Applicable
Certificate Of Authorization No.: Not Applicable
Expiration Date: Not Applicable

Prepared By Kuldip Singh - Program Lead Engineer (PLE) ***Signed By*** Kuldip Singh - Program Lead Engineer (PLE)

Date 7/1/09 ***Date*** 7/1/09

CERTIFICATE OF INSERVICE INSPECTION

I, the undersigned, holding a valid commission issued by the National Board of Boiler and Pressure Vessel Inspectors and the State of Washington ***and employed by*** Hartford Steam Boiler Of Connecticut of Hartford, Connecticut ***have inspected the components described in this Owner's Report during the period*** 6/3/2009 ***to*** 7/21/2009 ***and state to the best of my knowledge and belief, the Owner has performed examinations and taken corrective measures described in this Owner's Report in accordance with the requirements of the ASME Code, Section XI.***
By signing this certificate neither the Inspector nor his employer makes any warranty, expressed or implied, concerning the examinations and corrective measures described in this Owner's Report. Furthermore, neither the Inspector nor his employer shall be liable in any manner for any personal injury or property damage or a loss of any kind arising from or connected with this inspection.

Inspector's Signature ***Commissions*** 13172 WANI
National Board, State, and Endorsements

Date 7/21/2009

PLAN NO. 2-2168
007
Philip Smith
Pg. 1 of 2

FORM N-2 CERTIFICATE HOLDERS' DATA REPORT FOR IDENTICAL NUCLEAR PARTS AND APPURTENANCES*

As Required by the Provisions of the ASME Code, Section III
Not to Exceed One Day's Production

1. Manufactured and certified by IST Conax Nuclear, Inc. 482 Sonwil Drive, Cheektowaga, NY 14225 6/26/05
(name and address of NPT Certificate Holder)

2. Manufactured for Energy Northwest
(name and address of Purchaser)

3. Location of installation Columbia Generating Station, Richland, WA 99352
(name and address)

4. Type: N20000, Rev. G (drawing no.) | SA479/304SST (mat'l spec. no.) | 75 KSI N/A (tensile strength) | N/A (CRN) | 2000 (year built)

5. ASME Code, Section III, Division 1: 77 (edition) | Summer 77 (addenda date) | 1 (class) | N/A (Code Case no.)

6. Fabricated in accordance with Const. Spec. (Div. 2 only) _____ (no.) Revision _____ Date _____

7. Remarks: Trigger Body Subassembly for explosive actuated valve replacement kit for Standby Liquid Control System

Para. NB-2121 (b) is applicable to ram. Press fit/seal on .328 & .4375 diameters. Overall subassembly length is 2.5".

Pressure Test at 2000 psi for 10 minutes.

8. Nom. thickness (in.) See remarks Min. design thickness (in.) See remarks Dia. ID (ft & in.) See remarks Length overall (ft & in.) See remarks

9. When applicable, Certificate Holders' Data Reports are attached for each item of this report:

	Part or Appurtenance Serial Number	National Board No. in Numerical Order		Part or Appurtenance Serial Number	National Board No. in Numerical Order
(1)	7773	7773	(26)		
(2)	7774	7774	(27)		
(3)			(28)		
(4)			(29)		
(5)			(30)		
(6)			(31)		
(7)	SLC-V-4B,	TIGGER BODY	(32)		
(8)			(33)		
(9)			(34)		
(10)	S/N 7773		(35)		
(11)			(36)		
(12)			(37)		
(13)			(38)		
(14)			(39)		
(15)			(40)		
(16)			(41)		
(17)			(42)		
(18)			(43)		
(19)			(44)		
(20)			(45)		
(21)			(46)		
(22)			(47)		
(23)			(48)		
(24)			(49)		
(25)			(50)		

10. Design pressure 1500 psi. Temp. 150 °F. Hydro. test pressure * See Remarks at temp. °F
(when applicable)

*Supplemental information in the form of lists, sketches, or drawings may be used provided (1) size is 8½ x 11, (2) information in Items 2 and 3 on this Data Report is included on each sheet, (3) each sheet is numbered and the number of sheets is recorded at the top of this form.

Certificate Holder's Serial Nos. 7773 through 7774

CERTIFICATION OF DESIGN

Design specifications certified by George L Skoda (when applicable) P.E. State CA Reg. no. 15847

Design report* certified by Michael A. Francioli (when applicable) P.E. State NY Reg. no. 078468-1

CERTIFICATE OF COMPLIANCE

We certify that the statements made in this report are correct and that this (these) Trigger Body Subassembly conforms to the rules of construction of the ASME Code, Section III, Division 1.

NPT Certificate of Authorization No. N-1060 Expires September 3, 2010

Date 1/8/2009 Name IST-Conax Nuclear (NPT Certificate Holder) Signed Paul E Couchman (authorized representative)

CERTIFICATE OF INSPECTION

I, the undersigned, holding a valid commission issued by the National Board of Boiler and Pressure Vessel Inspectors and the State or Province of New York and employed by HSB CT of Hartford, CT have inspected these items described in this Data Report on 08 Jan 2009, and state that to the best of my knowledge and belief, the Certificate Holder has fabricated these parts or appurtenances in accordance with the ASME Code, Section III, Division 1. Each part listed has been authorized for stamping on the date shown above.
By signing this certificate, neither the inspector nor his employer makes any warranty, expressed or implied, concerning the equipment described in this Data Report. Furthermore, neither the inspector nor his employer shall be liable in any manner for any personal injury or property damage or loss of any kind arising from or connected with this inspection.

Date 01-08-09 Signed (Authorized Inspector) Commissions NB 10964AN NY 5057 [Nat'l Bd. (incl. endorsements) and state or prov. and no.]

PLAN NO. 2-2169
Philip Smith 005
6/26/09. Pg. 1 of 2

FORM N-2 CERTIFICATE HOLDERS' DATA REPORT FOR IDENTICAL NUCLEAR PARTS AND APPURTENANCES*

As Required by the Provisions of the ASME Code, Section III
Not to Exceed One Day's Production

1. Manufactured and certified by: IST Conax Nuclear, Inc. 492 Sonwil Drive, Cheektowaga, NY 14225 (name and address of NPT Certificate Holder)

2. Manufactured for: Energy Northwest (name and address of Purchaser)

3. Location of installation: Columbia Generating Station, Richland, WA 99352 (name and address)

4. Type: N38017 Rev. F (drawing no.) | SA479/304SST (mat'l spec. no.) | 75 KSI N/A (tensile strength) | N/A (CRN) | 2009 (year built)

5. ASME Code, Section III, Division 1: 77 (edition) | Summer 77 (addenda date) | 1 (class) | N/A (Code Case no.)

6. Fabricated in accordance with Const. Spec. (Div. 2 only) _____ (no.) Revision _____ Date _____

7. Remarks: Inlet Fitting for explosive actuated valve replacement kit for Standby Liquid Control System

Pressure Test at 2000 psi for 10 minutes

8. Nom. thickness (in.) .040" Min. design thickness (in.) .031" Dia. ID (ft & in.) .815" Length overall (ft & in.) 2.245"

9. When applicable, Certificate Holders' Data Reports are attached for each item of this report:

	Part or Appurtenance Serial Number	National Board No. in Numerical Order		Part or Appurtenance Serial Number	National Board No. in Numerical Order
(1)	7771	7771	(26)		
(2)	7772	7772	(27)		
(3)			(28)		
(4)			(29)		
(5)			(30)		
(6)			(31)		
(7)	SLC-V-4B, INLET		(32)		
(8)			(33)		
(9)			(34)		
(10)	S/N 7771		(35)		
(11)			(36)		
(12)			(37)		
(13)			(38)		
(14)			(39)		
(15)			(40)		
(16)			(41)		
(17)			(42)		
(18)			(43)		
(19)			(44)		
(20)			(45)		
(21)			(46)		
(22)			(47)		
(23)			(48)		
(24)			(49)		
(25)			(50)		

10. Design pressure 1500 psi. Temp. 150 °F. Hydro. test pressure * See Remarks at temp. °F (when applicable)

*Supplemental information in the form of lists, sketches, or drawings may be used provided (1) size is 8½ x 11, (2) information in items 2 and 3 on this Data Report is included on each sheet, (3) each sheet is numbered and the number of sheets is recorded at the top of this form.

Certificate Holder's Serial Nos. 7771 through 7772

CERTIFICATION OF DESIGN

Design specifications certified by George I. Skoda (when applicable) P.E. State CA Reg. no. 16947

Design report* certified by Michael A. Francioli (when applicable) P.E. State NY Reg. no. 078450-1

CERTIFICATE OF COMPLIANCE

We certify that the statements made in this report are correct and that this (these) Trigger Body Subassembly conforms to the rules of construction of the ASME Code, Section III, Division 1.

NPT Certificate of Authorization No. N-1050 Expires September 3, 2010

Date 1/8/2009 Name IST-Conax Nuclear (NPT Certificate Holder) Signed Paul E Couchman (authorized representative)

CERTIFICATE OF INSPECTION

I, the undersigned, holding a valid commission issued by the National Board of Boiler and Pressure Vessel Inspectors and the State or Province of New York and employed by HSB CT of Hartford, CT have inspected these items described in this Data Report on 08 JAN. 2009, and state that to the best of my knowledge and belief, the Certificate Holder has fabricated these parts or appurtenances in accordance with the ASME Code, Section III, Division 1. Each part listed has been authorized for stamping on the date shown above.
By signing this certificate, neither the inspector nor his employer makes any warranty, expressed or implied, concerning the equipment described in this Data Report. Furthermore, neither the inspector nor his employer shall be liable in any manner for any personal injury or property damage or loss of any kind arising from or connected with this inspection.

Date 01-08-09 Signed [signature] (Authorized Inspector) Commissions NB 16964AN NY 5057 [Nat'l Bd. (incl. endorsements) and state or prov. and no.]

FORM NIS-2 OWNER'S REPORT FOR REPAIR/REPLACEMENT ACTIVITY

As Required by the Provisions of the ASME Code Section XI

1. **Owner:** Energy Northwest
   Address P.O. Box 968
   Richland, WA 99352

   Date: 7/08/09

   Sheet: 1 of 1

2. **Plant:** Columbia Generating Station
   Address 76 North Power Plant Loop
   Richland, WA 99354

   Unit: 2

   Repair/Replacement Organization Work Order No. 01154226
   Work Plan No. 2-2171

3. **Work Performed by:** Energy Northwest
   Address: 76 North Power Plant Loop
   Richland, WA 99354

   Type Code Symbol Stamp: Not Applicable
   Authorization No. Not Applicable
   Expiration Date: Not Applicable

4. **Identification of System:** Reactor Recirculation System (RRC)

5. (a) **Applicable Construction Code:** ASME Section III **Edition:** 1971 **Addenda:** W73 **Code Case:** (see Data Report)

   (b) **Applicable Edition of Section XI Used for Repair/Replacement Activity:** 2001 **Addenda:** 2003

   (c) **Applicable Section XI Code Case(s):** N/A

6. **Identification of Components:**

Name of Component	*Name of Manufacturer*	*Manufacturer Serial No.*	*NB No.*	*Other No.*	*Year Built*	*Corrected, Removed, or Installed*	*ASME Code Stamped (Yes or No)*
Hanger RRC-1549-61	Bechtel	RRC(51)-4-P2	N/A	N/A	1983	Corrected	Yes

7. **Description of Work:**

Hanger RRC-1549-61 for 3/4" RRC-(50)-4S piping was removed and then reattached by welding to faciliate RRC Pump motor maintenance. Hanger RRC-1549-61 is an NF Code Class 1 support. PT Examination was successfully completed on the final welded surfaces as recorded on PT Examination Report No. 06-09-07-01.

8. **Test Conducted:** **Hydrostatic** ☐ **Pneumatic** ☐ **Nominal Operating Pressure** ☐ **Exempt** ☑

   Other ☐ **Pressure (psi):** N/A **Test Temperature (°F):** N/A

FORM NIS-2 OWNER'S REPORT FOR REPAIR/REPLACEMENT ACTIVITY

As Required by the Provisions of the ASME Code Section XI

FORM NIS-2 (Back)

9. ***Remarks:***

No ANII involvement was required (NPS 1 and under) in accordance with IWA-4130.

CERTIFICATE OF COMPLIANCE

I certify that the statements made in the report are correct and that this conforms to the requirements of the ASME Code, Section XI.

Type Code Symbol Stamp: Not Applicable

Certificate of Authorization No.: Not Applicable

Expiration Date: Not Applicable

Signed: PLE

Owner or Owner's Designee, Title

Date: 7/08/09

CERTIFICATE OF INSERVICE INSPECTION

I, _____, the undersigned, holding a valid commission issued by the National Board of Boiler and Pressure Vessel Inspectors and the State or Province of _____ and employed by _____ _____ have inspected the components described in this Owner's Report during the period _____ to _____, and state that to the best of my knowledge and belief, the Owner has performed examinations and taken corrective measures described in this Owner's Report in accordance with the requirements of the ASME Code, Section XI.

By signing this certificate neither the inspector nor his employer makes any warranty, expressed or implied, concerning the examinations and corrective measures described in this Owner's Report. Furthermore, neither the inspector nor his employer shall be liable in any manner for any personal injury or property damage or a loss of any kind arising from or connected with this inspection.

Not Required

Inspector's Signature

Commissions: _____

National Board, State, Province, and Endorsements

Date: _____

FORM NIS-2 OWNER'S REPORT FOR REPAIR/REPLACEMENT ACTIVITY

As Required by the Provisions of the ASME Code Section XI

1. **Owner:** Energy Northwest
   Address P.O. Box 968
   Richland, WA 99352

   Date: 6/19/09

   Sheet: 1 of 1

2. **Plant:** Columbia Generating Station
   Address 76 North Power Plant Loop
   Richland, WA 99354

   Unit: 2

   Repair/Replacement Organization Work Order No. 01115425
   Work Plan No. 2-2172

3. **Work Performed by:** Energy Northwest
   Address: 76 North Power Plant Loop
   Richland, WA 99354

   Type Code Symbol Stamp: Not Applicable
   Authorization No. Not Applicable
   Expiration Date: Not Applicable

4. **Identification of System:** Residual Heat Removal (RHR)

5. (a) **Applicable Construction Code:** ASME Section III **Edition:** 1971 **Addenda:** W73 **Code Case:** (see Data Report)

   (b) **Applicable Edition of Section XI Used for Repair/Replacement Activity:** 2001 **Addenda:** 2003

   (c) **Applicable Section XI Code Case(s):** N/A

6. **Identification of Components:**

Name of Component	*Name of Manufacturer*	*Manufacturer Serial No.*	*NB No.*	*Other No.*	*Year Built*	*Corrected, Removed, or Installed*	*ASME Code Stamped (Yes or No)*
RHR-V-84A	Borg Warner	20215	N/A	N/A	1977	Corrected	Yes

7. **Description of Work:**

The body to bonnet seal weld was removed to facilitate internal valve maintenance on RHR-V-84A, a Code Class 1 valve. A new body to bonnet seal weld was made after completion of internal maintenance in accordance with Weld Record No. 2-10384. PT Examinations were performed on the prepped surfaces and the final seal weld (Reference PT Examination Reports 5-09-7-52 and 5-09-7-57).

8. **Test Conducted:** **Hydrostatic** ☐ **Pneumatic** ☐ **Nominal Operating Pressure** ☑ **Exempt** ☐

   Other ☐ **Pressure (psi):** 115 **Test Temperature (°F):** 77.7

FORM NIS-2 OWNER'S REPORT FOR REPAIR/REPLACEMENT ACTIVITY

As Required by the Provisions of the ASME Code Section XI

FORM NIS-2 (Back)

9. **Remarks:**

CERTIFICATE OF COMPLIANCE

I certify that the statements made in the report are correct and that this conforms to the requirements of the ASME Code, Section XI.

Type Code Symbol Stamp: Not Applicable
Certificate of Authorization No.: Not Applicable
Expiration Date: Not Applicable

Signed: R Lahlh Eng.
Owner or Owner's Designee, Title

Date: 6/19/09

CERTIFICATE OF INSERVICE INSPECTION

I, Link J. Sherman, the undersigned, holding a valid commission issued by the National Board of Boiler and Pressure Vessel Inspectors and the State or Province of Washington and employed by Hartford Steam Boiler of Connecticut of Hartford, Connecticut have inspected the components described in this Owner's Report during the period 1/2/2009 to 6/23/2009, and state that to the best of my knowledge and belief, the Owner has performed examinations and taken corrective measures described in this Owner's Report in accordance with the requirements of the ASME Code, Section XI.

By signing this certificate neither the inspector nor his employer makes any warranty, expressed or implied, concerning the examinations and corrective measures described in this Owner's Report. Furthermore, neither the inspector nor his employer shall be liable in any manner for any personal injury or property damage or a loss of any kind arising from or connected with this inspection.

Inspector's Signature

Commissions: 13172 WAHI
National Board, State, Province, and Endorsement

Date: 6/23/2009

PLAN No 2-2181

ENERGY NORTHWEST
People · Vision · Solutions

FORM NIS-2 OWNER'S REPORT FOR REPAIR/REPLACEMENT ACTIVITY
As Required By The Provisions Of The ASME Code Section XI

Date: 06/21/2009
Sheet: 1 Of 1
Unit: Not Applicable

1. Owner: Energy Northwest
Address: Columbia Generating Station, North Power Plant Loop, Richland, Washington, 99352
2. Plant: Columbia Generating Station
Address: Columbia Generating Station, North Power Plant Loop, Richland, Washington, 99352
3. (a) Work Performed By: Energy Northwest
(b) Repair/Replacement Organization P.O. No, Job No, etc.: Energy Northwest
(c) Type Code Symbol Stamp: Not Applicable
(d) Certificate Of Authorization No.: Not Applicable
(e) Expiration Date: Not Applicable
4. Identification Of System: Reactor Feed Water (RFW) System
5. (a) Applicable Construction Code: ASME Section III, Code Class 1, 1971 Edition with Winter 1973 Addenda, Code Case: Note 1
(b) Applicable Edition Of ASME Section XI Used For Repair/Replacement Activity: 2001 Edition with 2003 Addenda
(c) Applicable ASME Section XI Code Case(s): None
6. Identification Of Components

Name Of Component	Name Of Manufacturer	Manufacturer's Serial No	National Board No	Other I.D.	Year Built	Corrected, Removed Or Installed	ASME Code Stamped (Yes Or No) Code Class
RFW(1)-4A	WPPSS*	RFW(1)-4A-P2	N/A	N/A	1983	See Item 7 Below	Yes, Code Class 1
RFW-V-76	Borg Warner	921S0434	N/A	N/A	1993	Installed	Yes, Code Class 1
RFW-V-77	Borg Warner	921S0433	N/A	N/A	1993	Installed	Yes, Code Class 1

7. Description Of Work: Fabricated vent line pipe assembly for installation on valve RFW-V-32A. The work was performed as follows:
1) Prepped sockolet end.
2) Performed liquid penetrant (PT) examination on the final sockolet prepped end welds. Liquid penetrant (PT) examination results acceptable.
3) Beveled valve RFW-V-76 socket ends.
4) Performed liquid penetrant (PT) examination on the final valve RFW-V-76 beveled socket ends. Liquid penetrant (PT) examination results acceptable.
5) Beveled valve RFW-V-77 socket end.
6) Performed liquid penetrant (PT) examination on the final valve RFW-V-77 beveled socket end. Liquid penetrant (PT) examination results acceptable.
7) Assembled valves and sockolet.
8) Made circumferential butt welds.
9) Performed visual examination on the final circumferential butt welds. Visual examination results acceptable.
10) Performed liquid penetrant (PT) examination on the final circumferential butt welds. Liquid penetrant (PT) examination results acceptable.
11) Performed radiographic (RT) examination on the final circumferential butt welds. Radiographic (RT) examination results acceptable.

NOTES -
1) The applicable ASME Code Cases, if any are listed on the ASME Code Data Reports.
2) * Company name changed from Washington Public Power Supply System (WPPSS) to Energy Northwest (EN) in 1999.
3) The ASME Code Stamped Reactor Feed Water (RFW) piping system RFW(1)-4A-P2 is certified to comply with ASME Section III, Code Class 1, 1971 Edition with Winter 1973 Addenda requirements.
4) The valve RFW-V-76, Serial No 921S0434 is certified to comply with ASME Section III, Code Class 1, 1971 Edition with Winter 1973 Addenda requirements.
Class 1, 1971 Edition with Winter 1973 Addenda requirements.
5) The valve RFW-V-77, Serial No 921S0433 is certified to comply with ASME Section III, Code Class 1, 1971 Edition with Winter 1973 Addenda requirements.

PLAN No 2-2181

ENERGY NORTHWEST
People · Vision · Solutions

FORM NIS-2 OWNER'S REPORT FOR REPAIR/REPLACEMENT ACTIVITY (Back)

8 Tests Conducted: Hydrostatic [ ] **Pneumatic** [ ] **Nominal Operating Pressure** [ ] **Other** [ ]
Exempt [X] **Test Pressure:** Psig **Test Temperature:** °F

9. Remarks (Applicable Manufacturer's Data Reports to be attached): See attached NPV-1 Code Data Reports for the following valves:

EPN No	Serial No
RFW-V-76	921S0434
RFW-V-77	921S0433

CERTIFICATE OF COMPLIANCE

I certify that the statements made in this Owner's Report are correct and that this conforms to the requirements of the ASME Code, Section XI.
Type Code Symbol Stamp: Not Applicable
Certificate Of Authorization No.: Not Applicable
Expiration Date: Not Applicable

Prepared By Kuldip Singh - Program Lead Engineer (PLE) **Signed By** Kuldip Singh - Program Lead Engineer (PLE)

Date 6/21/09 **Date** 6/21/09

CERTIFICATE OF INSERVICE INSPECTION

I, the undersigned, holding a valid commission issued by the National Board of Boiler and Pressure Vessel Inspectors and the State of _____ and employed by _____ of _____ have inspected the components described in this Owner's Report during the period _____ to _____ and state to the best of my knowledge and belief, the Owner has performed examinations and taken corrective measures described in this Owner's Report in accordance with the requirements of the ASME Code, Section XI.
By signing this certificate neither the inspector nor his employer makes any warranty, expressed or implied, concerning the examinations and corrective measures described in this Owner's Report. Furthermore, neither the inspector nor his employer shall be liable in any manner for any personal injury or property damage or a loss of any kind arising from or connected with this inspection.

N/R - Repair/Replacement 1" NPS And Smaller (Small Items) **Commissions** _____
Inspector's Signature National Board, State, and Endorsements

Date _____

PLAN NO. 2-2181

FORM NPV-1 CERTIFICATE HOLDERS' DATA REPORT FOR NUCLEAR PUMPS OR VALVES*

As Required by the Provisions of the ASME Code, Section III, Division 1

Philip Sutphin Page 1 of 2

6/21/09.

1. Manufactured and certified by BW/IP INTERNATIONAL, INC. PUMP DIVISION LOS ANGELES OPERATIONS 2300 EAST VERNON AVENUE, VERNON, CA 90058
(name and address of N Certificate Holder)

2. Manufactured for WASHINGTON PUBLIC POWER SUPPLY SYSTEM WNP-2 OPS WHS COMPLEX, WHS #1, RICHLAND, WA 99352
(name and address of Purchaser)

3. Location of installation WASHINGTON PUBLIC POWER SUPPLY SYSTEM WNP-2 OPS WHS COMPLEX, WHS #1, RICHLAND, WA 99352
(name and address)

4. Model No., Series No., or Type GLOBE Drawing 76590 Rev. M CRN N/A

5. ASME Code, Section III, Division 1: 1971 (edition) WINTER 1973 (addenda date) 1 (class) N/A (Code Case no.) SEE REMARKS

6. Pump or valve VALVE Nominal inlet size 3/4 (in.) Outlet size 3/4 (in.)

7. Material: Body SA-105 Bonnet N/A Disk *STELLITE 6 ALLOY 1 **ALLOY 6 Bolting N/A

(a) Cert. Holder's Serial No.	(b) Nat'l Board No.	(c) Body Serial No.	(d) Bonnet Serial No.	(e) Disk Serial No.
921S0427	N/A	224452 SN25	N/A	217876 SN20*
921S0428	N/A	224452 SN13	N/A	217876 SN27*
921S0429	N/A	224452 SN14	N/A	217876 SN24*
921S0430	N/A	301285 SN2	N/A	224091 SN18**
921S0431	N/A	224452A SN5	N/A	224091 SN13**
921S0432	N/A	301285 SN6	N/A	217876 SN18*
921S0433	N/A	224452A SN7	N/A	217876 SN17*
921S0434	N/A	224452A SN8	N/A	217876 SN16*
921S0435	N/A	224452A SN9	N/A	217876 SN22*
921S0436	N/A	301285 SN10	N/A	217876 SN25*

RFW-V-76, S/N 921S0434

* Supplemental information in form of lists, sketches, or drawings may be used provided (1) size is 8½ × 11, (2) information in items 1 through 4 on this Data Report is included on each sheet, (3) each sheet is numbered and the number of sheets is recorded at the top of this form.

FORM NPV-1 (Back — Pg. 2 of 2)

Certificate Holder's Serial No. 921S0427 THRU 921S0436

8. Design conditions 3600 (pressure) psi 100 (temperature) °F or valve pressure class 1500# (1)

9. Cold working pressure 3600 psi at 100°F

10. Hydrostatic test 5400-5450 psi. Disk differential test pressure 3960-4010 psi

11. Remarks: BACKSEAT MATERIAL: SA-564 TP.630 COND. H-1100

CERT HOLDER'S SN:	BACKSEAT SN:	CERT HOLDER'S SN:	BACKSEAT SN:	CERT HOLDER'S SN:	BACKSEAT SN:
921S0427	225647 SN5	921S0430	225647 SN9	921S0433	225647 SN4
921S0428	225647 SN8	921S0431	225647 SN1	921S0434	225647 SN10
921S0429	225647 SN3	921S0432	225647 SN2	921S0435	225647 SN6
				921S0436	225647 SN7

THESE VALVES WERE MANUFACTURED TO THE 1974 EDITION W75 ADDENDA CODE EFFECTIVITY DATE AND RECONCILED IN OUR DESIGN REPORT MSR 76590 REV. D WHICH WAS APPROVED BY WASHINGTON PUBLIC POWER SUPPLY SYSTEMS.

CERTIFICATION OF DESIGN

Design Specification certified by RICHARD LESLIE SCHLOSSER P.E. State WA Reg. no. 21701

Design Report certified by RAJ CHAUDHARY P.E. State CA Reg. no. M20608

CERTIFICATE OF COMPLIANCE

We certify that the statements made in this report are correct and that this pump or valve conforms to the rules for construction of the ASME Code, Section III, Division 1.

N Certificate of Authorization No. N-1130 Expires JUNE 10, 1993

Date 3-30-93 Name BW/IP INTERNATIONAL, INC. (N Certificate Holder) Signed [signature] (Authorized Representative)

CERTIFICATE OF INSPECTION

I, the undersigned, holding a valid commission issued by the National Board of Boiler and Pressure Vessel Inspectors and the State or Province of CALIFORNIA and employed by *ARKWRIGHT MUTUAL INS. CO. of NORWOOD, MASS. have inspected the pump, or valve, described in this Data Report on MAR. 31, 1993, and state that to the best of my knowledge and belief, the Certificate Holder has constructed this pump, or valve, in accordance with the ASME Code, Section III, Division 1.

*FACTORY MUTUAL ENGINEERING ASSOCIATION

By signing this certificate, neither the inspector nor his employer makes any warranty, expressed or implied, concerning the component described in this Data Report. Furthermore, neither the inspector nor his employer shall be liable in any manner for any personal injury or property damage or a loss of any kind arising from or connected with this inspection.

Date 3/31/93 Signed [signature] (Authorized Inspector) Commissions 1275 CA. [Nat'l. Bd. (incl. endorsements) and state or prov. and no.]

(1) For manually operated valves only.

PLAN No. 2-2181

FORM NPV-1 CERTIFICATE HOLDERS' DATA REPORT FOR NUCLEAR PUMPS OR VALVES*

As Required by the Provisions of the ASME Code, Section III, Division 1

Philip Smith 6/21/09

1. Manufactured and certified by BW/IP INTERNATIONAL, INC. PUMP DIVISION LOS ANGELES OPERATIONS 2300 EAST VERNON AVENUE, VERNON, CA 90058
(name and address of N Certificate Holder)

2. Manufactured for WASHINGTON PUBLIC POWER SUPPLY SYSTEM WNP-2 OPS WBS COMPLEX, WBS #1, RICHLAND, WA 99352
(name and address of Purchaser)

3. Location of installation WASHINGTON PUBLIC POWER SUPPLY SYSTEM WNP-2 OPS WBS COMPLEX, WBS #1, RICHLAND, WA 99352
(name and address)

4. Model No., Series No., or Type GLOBE Drawing 76590 Rev. M CRN N/A

5. ASME Code, Section III, Division 1: 1971 (edition) WINTER 1973 (addenda date) 1 (class) N/A (Code Case no.) SEE REMARKS

6. Pump or valve VALVE Nominal inlet size 3/4 (in.) Outlet size 3/4 (in.)

7. Material: Body SA-105 Bonnet N/A Disk *STELLITE 6 ALLOY 1 **ALLOY 6 Bolting N/A

(a) Cert. Holder's Serial No.	(b) Nat'l Board No.	(c) Body Serial No.	(d) Bonnet Serial No.	(e) Disk Serial No.
921S0427	N/A	224452 SN25	N/A	217876 SN20*
921S0428	N/A	224452 SN13	N/A	217876 SN27*
921S0429	N/A	224452 SN14	N/A	217876 SN24*
921S0430	N/A	301285 SN2	N/A	224091 SN18**
921S0431	N/A	224452A SN5	N/A	224091 SN13**
921S0432	N/A	301285 SN6	N/A	217876 SN18*
921S0433	N/A	224452A SN7	N/A	217876 SN17*
921S0434	N/A	224452A SN8	N/A	217876 SN16*
921S0435	N/A	224452A SN9	N/A	217876 SN22*
921S0436	N/A	301285 SN10	N/A	217876 SN25*

RFW-V-77, S/N 921S0433

* Supplemental information in form of lists, sketches, or drawings may be used provided (1) size is 8½ × 11, (2) information in items 1 through 4 on this Data Report is included on each sheet, (3) each sheet is numbered and the number of sheets is recorded at the top of this form.

Certificate Holder's Serial No. 921S0427 THRU 921S0436

8. Design conditions 3600 (pressure) psi 100 (temperature) °F or valve pressure class 1500# (1)

9. Cold working pressure 3600 psi at 100°F

10. Hydrostatic test 5400-5450 psi. Disk differential test pressure 3960-4010 psi

11. Remarks: BACKSEAT MATERIAL: SA-564 TP.630 COND. H-1100

CERT HOLDER'S SN:	BACKSEAT SN:	CERT HOLDER'S SN:	BACKSEAT SN:	CERT HOLDER'S SN:	BACKSEAT SN:
921S0427	225647 SN5	921S0430	225647 SN9	921S0433	225647 SN4
921S0428	225647 SN8	921S0431	225647 SN1	921S0434	225647 SN10
921S0429	225647 SN3	921S0432	225647 SN2	921S0435	225647 SN6
				921S0436	225647 SN7

THESE VALVES WERE MANUFACTURED TO THE 1974 EDITION W75 ADDENDA CODE EFFECTIVITY DATE AND RECONCILED IN OUR DESIGN REPORT NSR 76590 REV. D WHICH WAS APPROVED BY WASHINGTON PUBLIC POWER SUPPLY SYSTEMS.

CERTIFICATION OF DESIGN

Design Specification certified by RICHARD LESLIE SCHLOSSER P.E. State WA Reg. no. 21701

Design Report certified by RAJ CHAUDHARY P.E. State CA Reg. no. M20608

CERTIFICATE OF COMPLIANCE

We certify that the statements made in this report are correct and that this pump or valve conforms to the rules for construction of the ASME Code, Section III, Division 1.

N Certificate of Authorization No. N-1130 Expires JUNE 10, 1993

Date 3-30-93 Name BW/IP INTERNATIONAL, INC. (N Certificate Holder) Signed (Authorized representative)

CERTIFICATE OF INSPECTION

I, the undersigned, holding a valid commission issued by the National Board of Boiler and Pressure Vessel Inspectors and the State or Province of CALIFORNIA and employed by *ARKWRIGHT MUTUAL INS. CO. of NORWOOD, MASS. have inspected the pump, or valve, described in this Data Report on Mar. 31, 1993, and state that to the best of my knowledge and belief, the Certificate Holder has constructed this pump, or valve, in accordance with the ASME Code, Section III, Division 1.

*FACTORY MUTUAL ENGINEERING ASSOCIATION

By signing this certificate, neither the inspector nor his employer makes any warranty, expressed or implied, concerning the component described in this Data Report. Furthermore, neither the inspector nor his employer shall be liable in any manner for any personal injury or property damage or a loss of any kind arising from or connected with this inspection.

Date 3/31/93 Signed (Authorized Inspector) Commissions 1275 Cal. [Nat'l. Bd. (incl. endorsements) and state or prov. and no.]

(1) For manually operated valves only.

PLAN No 2-2183

ENERGY NORTHWEST
People·Vision·Solutions

FORM NIS-2 OWNER'S REPORT FOR REPAIR/REPLACEMENT ACTIVITY
As Required By The Provisions Of The ASME Code Section XI

1. Owner: Energy Northwest
Address: Columbia Generating Station, North Power Plant Loop, Richland, Washington, 99352
2. Plant: Columbia Generating Station
Address: Columbia Generating Station, North Power Plant Loop, Richland, Washington, 99352

Date: 07/08/2009
Sheet: 1 Of 1
Unit: Not Applicable

3. (a) Work Performed By: Energy Northwest
(b) Repair/Replacement Organization P.O. No, Job No, etc.: Energy Northwest
(c) Type Code Symbol Stamp: Not Applicable
(d) Certificate Of Authorization No.: Not Applicable
(e) Expiration Date: Not Applicable
4. Identification Of System: Reactor Feed Water (RFW) System
5. (a) Applicable Construction Code: ASME Section III, Code Class 1, 1971 Edition with Winter 1973 Addenda, Code Case: Note 1
(b) Applicable Edition Of ASME Section XI Used For Repair/Replacement Activity: 2001 Edition with 2003 Addenda
(c) Applicable ASME Section XI Code Case(s): None
6. Identification Of Components

Name Of Component	Name Of Manufacturer	Manufacturer's Serial No	National Board No	Other I.D.	Year Built	Corrected, Removed Or Installed	ASME Code Stamped (Yes Or No) Code Class
RFW(1)-4B	WPPSS*	RFW(1)-4A-P2	N/A	N/A	1983	See Item 7 Below	Yes, Code Class 1
RFW-V-78	Borg Warner	921S0432	N/A	N/A	1993	Installed	Yes, Code Class 1
RFW-V-79	Flowserve	24AYY	N/A	N/A	2004	Installed	Yes, Code Class 1

7. Description Of Work: Fabricated vent line pipe assembly for installation on valve RFW-V-32B. The work was performed as follows:

1) Prepped sockolet end.
2) Performed liquid penetrant (PT) examination on the final sockolet prepped end welds. Liquid penetrant (PT) examination results acceptable.
3) Beveled valve RFW-V-78 socket ends.
4) Performed liquid penetrant (PT) examination on the final valve RFW-V-78 beveled socket ends. Liquid penetrant (PT) examination results acceptable.
5) Beveled valve RFW-V-79 socket end.
6) Performed liquid penetrant (PT) examination on the final valve RFW-V-79 beveled socket end. Liquid penetrant (PT) examination results acceptable.
7) Assembled valves and sockolet.
8) Made circumferential butt welds.
9) Performed visual examination on the final circumferential butt welds. Visual examination results acceptable.
10) Performed liquid penetrant (PT) examination on the final circumferential butt welds. Liquid penetrant (PT) examination results acceptable.
11) Performed radiographic (RT) examination on the final circumferential butt welds. Radiographic (RT) examination results acceptable.

NOTES

1) The applicable ASME Code Cases, if any are listed on the ASME Code Data Reports.
2) * Company name changed from Washington Public Power Supply System (WPPSS) to Energy Northwest (EN) in 1999.
3) The ASME Code Stamped Reactor Feed Water (RFW) piping system RFW(1)-4B-P2 is certified to comply with ASME Section III, Code Class 1, 1971 Edition with Winter 1973 Addenda requirements.
4) The valve RFW-V-78, Serial No 921S0432 is certified to comply with ASME Section III, Code Class 1, 1971 Edition with Winter 1973 Addenda requirements.
Class 1, 1971 Edition with Winter 1973 Addenda requirements.
5) The valve RFW-V-79, Serial No 24AYY is certified to comply with ASME Section III, Code Class 1, 1977 Edition with Summer 1977 Addenda requirements reconciled to 1971 Edition with Winter Summer 1973 Addenda.

PLAN No 2-2183

ENERGY NORTHWEST
People · Vision · Solutions

FORM NIS-2 OWNER'S REPORT FOR REPAIR/REPLACEMENT ACTIVITY (Back)

8 Tests Conducted: Hydrostatic [ ] **Pneumatic** [ ] **Nominal Operating Pressure** [ ] **Other** [ ]
Exempt [X] **Test Pressure:** Psig **Test Temperature:** °F

9. Remarks (Applicable Manufacturer's Data Reports to be attached): See attached NPV-1 Code Data Reports for the following valves:

EPN No	Serial No
RFW-V-78	921S0432
RFW-V-79	24AYY

CERTIFICATE OF COMPLIANCE

I certify that the statements made in this Owner's Report are correct and that this conforms to the requirements of the ASME Code, Section XI.
Type Code Symbol Stamp: Not Applicable
Certificate Of Authorization No.: Not Applicable
Expiration Date: Not Applicable

Prepared By Kuldip Singh **Signed By** Kuldip Singh
Kuldip Singh - Program Lead Engineer (PLE) Kuldip Singh - Program Lead Engineer (PLE)
Date 7/8/09 **Date** 7/8/09

CERTIFICATE OF INSERVICE INSPECTION

I, the undersigned, holding a valid commission issued by the National Board of Boiler and Pressure Vessel Inspectors and the State of _____ and employed by _____ of _____ have inspected the components described in this Owner's Report during the period _____ to _____ and state to the best of my knowledge and belief, the Owner has performed examinations and taken corrective measures described in this Owner's Report in accordance with the requirements of the ASME Code, Section XI.
By signing this certificate neither the Inspector nor his employer makes any warranty, expressed or implied, concerning the examinations and corrective measures described in this Owner's Report. Furthermore, neither the Inspector nor his employer shall be liable in any manner for any personal injury or property damage or a loss of any kind arising from or connected with this inspection.

N/R - Repair/Replacement 1" NPS And Smaller (Small Items) **Commissions** _____
Inspector's Signature National Board, State, and Endorsements
Date _____

PLAN No. 2-2183
Philip Smith
7/8/09.

FORM NPV-1 CERTIFICATE HOLDERS' DATA REPORT FOR NUCLEAR PUMPS OR VALVES*
As Required by the Provisions of the ASME Code, Section III, Division 1

1. Manufactured and certified by BW/IP INTERNATIONAL, INC. PUMP DIVISION LOS ANGELES OPERATIONS 2300 EAST VERNON AVENUE, VERNON, CA 90058
(name and address of N Certificate Holder)

2. Manufactured for WASHINGTON PUBLIC POWER SUPPLY SYSTEM WNP-2 OPS WHS COMPLEX, WHS #1, RICHLAND, WA 99352
(name and address of Purchaser)

3. Location of installation WASHINGTON PUBLIC POWER SUPPLY SYSTEM WNP-2 OPS WHS COMPLEX, WHS #1, RICHLAND, WA 99352
(name and address)

4. Model No., Series No., or Type GLOBE Drawing 76590 Rev. M CRN N/A

5. ASME Code, Section III, Division 1: 1971 (edition) WINTER 1973 (addenda date) 1 (class) N/A (Code Case no.) SEE REMARKS

6. Pump or valve VALVE Nominal inlet size 3/4 (in.) Outlet size 3/4 (in.)

7. Material: Body SA-105 Bonnet N/A Disk *STELLITE 6 ALLOY 1 **ALLOY 6 Bolting N/A

(a) Cert. Holder's Serial No.	(b) Nat'l Board No.	(c) Body Serial No.	(d) Bonnet Serial No.	(e) Disk Serial No.
921S0427	N/A	224452 SN25	N/A	217876 SN20*
921S0428	N/A	224452 SN13	N/A	217876 SN27*
921S0429	N/A	224452 SN14	N/A	217876 SN24*
921S0430	N/A	301285 SN2	N/A	224091 SN18**
921S0431	N/A	224452A SN5	N/A	224091 SN13**
921S0432	N/A	301285 SN6	N/A	217876 SN18*
921S0433	N/A	224452A SN7	N/A	217876 SN17*
921S0434	N/A	224452A SN8	N/A	217876 SN16*
921S0435	N/A	224452A SN9	N/A	217876 SN22*
921S0436	N/A	301285 SN10	N/A	217876 SN25*

RFW-V-78, S/N 92180432

* Supplemental information in form of lists, sketches, or drawings may be used provided (1) size is 8½ × 11, (2) information in items 1 through 4 on this Data Report is included on each sheet, (3) each sheet is numbered and the number of sheets is recorded at the top of this form.

Certificate Holder's Serial No. 921S0427 THRU 921S0436

8. Design conditions 3600 (pressure) psi 100 (temperature) °F or valve pressure class 1500# (1)

9. Cold working pressure 3600 psi at 100°F

10. Hydrostatic test 5400-5450 psi. Disk differential test pressure 3960-4010 psi

11. Remarks: BACKSEAT MATERIAL: SA-564 TP.630 COND. H-1100

CERT HOLDER'S SN:	BACKSEAT SN:	CERT HOLDER'S SN:	BACKSEAT SN:	CERT HOLDER'S SN:	BACKSEAT SN:
921S0427	225647 SN5	921S0430	225647 SN9	921S0433	225647 SN4
921S0428	225647 SN8	921S0431	225647 SN1	921S0434	225647 SN10
921S0429	225647 SN3	921S0432	225647 SN2	921S0435	225647 SN6
				921S0436	225647 SN7

THESE VALVES WERE MANUFACTURED TO THE 1974 EDITION W75 ADDENDA CODE EFFECTIVITY DATE AND RECONCILED IN OUR DESIGN REPORT NSR 76590 REV. D WHICH WAS APPROVED BY WASHINGTON PUBLIC POWER SUPPLY SYSTEMS.

CERTIFICATION OF DESIGN

Design Specification certified by RICHARD LESLIE SCHLOSSER P.E. State WA Reg. no. 21701

Design Report certified by RAJ CHAUDHARY P.E. State CA Reg. no. M20608

CERTIFICATE OF COMPLIANCE

We certify that the statements made in this report are correct and that this pump or valve conforms to the rules for construction of the ASME Code, Section III, Division 1.

N Certificate of Authorization No. N-1130 Expires JUNE 10, 1993

Date 3-30-93 Name BW/IP INTERNATIONAL, INC. (N Certificate Holder) Signed (Authorized Representative)

CERTIFICATE OF INSPECTION

I, the undersigned, holding a valid commission issued by the National Board of Boiler and Pressure Vessel Inspectors and the State or Province of CALIFORNIA and employed by *ARKWRIGHT MUTUAL INS. CO. of NORWOOD, MASS. have inspected the pump, or valve, described in this Data Report on MAR. 31, 1993, and state that to the best of my knowledge and belief, the Certificate Holder has constructed this pump, or valve, in accordance with the ASME Code, Section III, Division 1.

*FACTORY MUTUAL ENGINEERING ASSOCIATION

By signing this certificate, neither the inspector nor his employer makes any warranty, expressed or implied, concerning the component described in this Data Report. Furthermore, neither the inspector nor his employer shall be liable in any manner for any personal injury or property damage or a loss of any kind arising from or connected with this inspection.

Date 3/31/93 Signed (Authorized Inspector) Commissions 1225 CA. (Nat'l. Bd. (incl. endorsements) and state or prov. and no.)

(1) For manually operated valves only.

PLAN No. 2.2183
Philip Smith 7/8/09.

FORM NPV-1 N CERTIFICATE HOLDERS' DATA REPORT FOR NUCLEAR PUMPS OR VALVES*

As Required by the Provisions of the ASME Code, Section III, Div. 1

1. Manufactured by Flowserve Corporation, 1900 S. Saunders St., Raleigh, NC 27603
(Name and Address of N Certificate Holder)

2. Manufactured for Energy Northwest PO Box 968 Richland, WA 99352-0968
(Name and Address of Purchaser or Owner)

3. Location of Installation Columbia Generating Station, Snake River Warehouse, North Power Plant Loop Richland, WA 99352-0968
(Name and Address)

4. Pump or Valve Valve Nominal Inlet Size 3/4" (inch) Outlet Size 3/4" (inch)

	(a) Model No. Series No. or Type	(b) N Certificate Holder's Serial No	(c) Canadian Registration No.	(d) Drawing No.	(e) Class	(f) Nat'l. Bd. No.	(g) Year Built
(1)	1500#	23AYY	N/A	76590 Rev. S	1	N/A	2004
(2)	1500#	24AYY	N/A	76590 Rev. S	1	N/A	2004
(3)	1500#	25AYY	N/A	76590 Rev. S	1	N/A	2004
(4)	1500#	26AYY	N/A	76590 Rev. S	1	N/A	2004
(5)	1500#	27AYY	N/A	76590 Rev. S	1	N/A	2004
(6)	1500#	28AYY	N/A	76590 Rev. S	1	N/A	2004
(7)	1500#	29AYY	N/A	76590 Rev. S	1	N/A	2004
(8)							
(9)							
(10)	RFW-V-79, S/N 24AYY						

5. 3/4" 1500# Y-GLOBE
(Brief description of service for which equipment was designed)

*valve also meets ASME Sec. III 1971 Ed.Winter 1973 Add. Cl. 1, ASME Sec. III 1974 Ed. Summer 1975 Add. Cl. 1, ASME Sec. III 1974 Ed. Winter 1975 Add. Cl. 1 25826

6. Design Conditions 1650 (Pressure) psi 575 (Temperature) °F or Valve Pressure Class 1500 (1)

7. Cold Working Pressure 3600 psi at 100 °F.

8. Pressure Retaining Pieces

Mark No.	Material Spec. No.	Manufacturer	Remarks
(a) Castings			
M8108	AMS 5387	Tech Cast	Disc
(b) Forgings			
79932	SA105	Larson	Body
1G6158	SA564-630-H1100	Nova	Backseat

(1) For manually operated valves only

*Supplemental sheets in form of lists, sketches or drawings may be used provided (1) size is 8-1/2" x 11", (2) information in items 1, 2 and 5 on this Data Report is included on each sheet, and (3) each sheet is numbered and number of sheets is recorded at top of this form. 3

Valve S/N 23AYY through 29AYY

Mark No.	Material Spec. No.	Manufacturer	Remarks
(c) Bolting			
(d) Other Parts			

9. Hydrostatic test 5400 psi. Disk Differential test pressure 3960 psi.

CERTIFICATE OF COMPLIANCE

We certify that the statements made in this report are correct and that this pump, or valve, conforms to the rules of construction of the ASME Code for Nuclear Power Plant Components. Section III, Div. 1., Edition 1977*

Addenda Summer 1977*, Code Case No. N/A, Date 7/2/04

Signed Flowserve by [signature]
(N Certificate Holder)

Our ASME Certificate of Authorization No. N-1562 to use the N (N) symbol expires 11-26-06 (Date)

CERTIFICATION OF DESIGN

Design information on file at Flowserve Corporation Raleigh, NC

Stress analysis report (Class 1 only) on file at Flowserve Corporation Raleigh, NC

Design specifications certified by (1) R.L. Schlosser / J.R. Cole

PE State WA Reg. No. 21701 / 20653

Stress analysis certified by (1) Ron Farrell

PE State NC Reg. No. 028656

(1) Signature not required. List name only.

CERTIFICATE OF SHOP INSPECTION

I, the undersigned, holding a valid commission issued by the National Board of Boiler and Pressure Vessel Inspectors and the State or Province of North Carolina and employed by HSB CT of Hartford Connecticut have inspected the pump, or valve, described in this Data Report on 7/2/04, and state that, to the best of my knowledge and belief, the N Certificate Holder has constructed this pump, or valve, in accordance with ASME Code, Section III.

By signing this certificate neither the Inspector nor his employer makes any warranty, expressed or implied, concerning the equipment described in this s Data Report. Furthermore, neither the Inspector nor his employer shall be liable in any manner for any personal injury or property damage or a loss of any kind arising from or connected with this Inspection.

Date 7/2/04

Signed [signature] (Inspector) Commissions NC 1421 (Nat'l Bd., State, Prov. and No.)

PLAN No 2-2185

ENERGY NORTHWEST
People · Vision · Solutions

FORM NIS-2 OWNER'S REPORT FOR REPAIR/REPLACEMENT ACTIVITY
As Required By The Provisions Of The ASME Code Section XI

Date: 07/16/2009
Sheet: 1 Of 1
Unit: Not Applicable

1. Owner: Energy Northwest
Address: Columbia Generating Station, North Power Plant Loop, Richland, Washington, 99352
2. Plant: Columbia Generating Station
Address: Columbia Generating Station, North Power Plant Loop, Richland, Washington, 99352
3. (a) Work Performed By: Energy Northwest
(b) Repair/Replacement Organization P.O. No, Job No, etc.: Energy Northwest
(c) Type Code Symbol Stamp: Not Applicable
(d) Certificate Of Authorization No.: Not Applicable
(e) Expiration Date: Not Applicable
4. Identification Of System: Main Steam (MS) System/Miscellaneous Drains (MD) System
5. (a) Applicable Construction Code: ASME Section III, Code Class 2, 1971 Edition with Winter 1973 Addenda, Code Case: Note 1
(b) Applicable Edition Of ASME Section XI Used For Repair/Replacement Activity: 2001 Edition with 2003 Addenda
(c) Applicable ASME Section XI Code Case(s): None
6. Identification Of Components

Name Of Component	Name Of Manufacturer	Manufacturer's Serial No	National Board No	Other I.D.	Year Built	Corrected, Removed Or Installed	ASME Code Stamped (Yes Or No) Code Class
MS(1)-4D	WPPSS*	MS(1)-4D-P3	N/A	N/A	1983	See Item 7 Below	Yes, Code Class 2

7. Description Of Work: Modified hanger MD-1285-14C. The replacement work was performed as follows:
1) Installed new hanger material.
2) Made required welds.
3) Performed visual examination on the final welds. Visual examination results acceptable.
4) Installed new U bolt.
5) Installed new snubber Serial No 10661.

NOTES -
1) The applicable ASME Code Cases, if any are listed on the ASME Code Data Reports.
2) * Company name changed from Washington Public Power Supply System (WPPSS) to Energy Northwest (EN) in 1999.
3) The existing ASME Code Stamped piping system for hanger MD-1285-14C is Main steam (MS) piping system MS(1)-4D-P3. This piping system is certified to comply with ASME Section III, Code Class 2, 1971 Edition with Winter 1973 Addenda requirements.
4) The replacement snubber Serial No 10661 is certified to comply with ASME Section III, Code Class NF(1), 1974 Edition with Winter 1976 Addenda requirements.
5) ASME Section III, Code Class NF(1) snubber for ASME Section III, Code Class NF(2) application.

PLAN No 2-2185

ENERGY NORTHWEST
People·Vision·Solutions

FORM NIS-2 OWNER'S REPORT FOR REPAIR/REPLACEMENT ACTIVITY (Back)

8 Tests Conducted: Hydrostatic [ ] **Pneumatic** [ ] **Nominal Operating Pressure** [ ] **Other** [ ]
Exempt [X] **Test Pressure:** Psig **Test Temperature:** °F

9. Remarks (Applicable Manufacturer's Data Reports to be attached): See attached NF-1 Code Data Report for the replacement snubber , Serial No 10661.

CERTIFICATE OF COMPLIANCE

I certify that the statements made in this Owner's Report are correct and that this conforms to the requirements of the ASME Code, Section XI.
Type Code Symbol Stamp: Not Applicable
Certificate Of Authorization No.: Not Applicable
Expiration Date: Not Applicable

Prepared By Kuldip Singh
Kuldip Singh - Program Lead Engineer (PLE)
Date 7/16/09

Signed By Kuldip Singh
Kuldip Singh - Program Lead Engineer (PLE)
Date 7/16/09

CERTIFICATE OF INSERVICE INSPECTION

I, the undersigned, holding a valid commission issued by the National Board of Boiler and Pressure Vessel Inspectors and the State of _____ and employed by _____ of _____ have inspected the components described in this Owner's Report during the period _____ to _____ and state to the best of my knowledge and belief, the Owner has performed examinations and taken corrective measures described in this Owner's Report in accordance with the requirements of the ASME Code, Section XI.
By signing this certificate neither the Inspector nor his employer makes any warranty, expressed or implied, concerning the examinations and corrective measures described in this Owner's Report. Furthermore, neither the Inspector nor his employer shall be liable in any manner for any personal injury or property damage or a loss of any kind arising from or connected with this inspection.

N/R - Repair/Replacement 1" NPS And Smaller (Small Items)
Inspector's Signature

Commissions _____
National Board, State, and Endorsements

Date _____

PLAN No. 2-2185

FORM NF-1 NPT CERTIFICATE HOLDERS' DATA REPORT FOR COMPONENT SUPPORTS*

As Required by the Provisions of the ASME Code, Section III, Division 1 E-WZ-796

1. Manufactured by Pacific Scientific 1346 S. State College Blvd. Anaheim, Ca. 92803
(Name and address of NPT Certificate Holder)

2. Manufacturer for ITT Grinnell Corp. 621 Dana Street NE Warren, Ohio 44481
(Name and address of purchaser or owner)

3. Location of Installation Unknown

4. Identification

	(a) Component Support I.D. No.	(b) Canadian Registration No.	(c) Applicable Drawings with Last Rev. & Date	(d) Stress Report or Load Capacity Data Sheet	(e) Type of Component Support	(f) Class	(g) Nat'l Board No.	(h) Year Built
(1)	10629-10661	None	1801106-05-H	DR-1350-Rev. B	Linear	1	None	1980
(2)								
(3)								
(4)								
(5)	MD-1285-14C, S/N 10661							
(6)								
(7)								
(8)				Philip Sims				
(9)								
(10)					7/16/09			

5. Remarks:

CERTIFICATE OF COMPLIANCE

We certify that the statements made in this report are correct and that these components supports conform to the rules of construction of the ASME Code for Nuclear Power Plant Components, Section III, Division 1, Edition 1974, Addenda Winter '76 (Date)
Code Case No. 1644-5 & 1686

Date 25 January 1980 Signed Pacific Scientific (NPT Certificate Holder) by Bill Jenkins

Our ASME Certificate of Authorization No. 1198 to use the Component Supports (NPT)

Symbol expires Aug. 4, 1981 (Date)

CERTIFICATION OF DESIGN

Design Information on File at Pacific Scientific

Stress Report or Load Capacity Data Sheets on File at:
Pacific Scientific
Filed Per NA 3256

Design Specifications Certified by (1) Leo E. Ay PE State California

Reg. No. 13533

Stress Analysis Report or Load Capacity Data Sheets Certified by (1) Leo E. Ay

PE State California Reg. No. 13533

(1) List name only, signature not required.

*Supplemental sheets in form of lists, sketches or drawings may be used provided (1) size is 8½ in. (2) information is [illegible]

CERTIFICATE OF SHOP INSPECTION

I, undersigned, holding a valid commission issued by the National Board of Boiler and Pressure Vessel Inspectors and the State or Province of New York and employed by HSB&I&I of Hartford, CT have inspected the component supports described in this Data Report on 1/25, 19 80 and state that to the best of my knowledge and belief the NPT Certificate Holder has constructed these component supports in accordance with the ASME Code for Nuclear Power Plant Components.

By signing this certificate, neither the Inspector nor his employer makes any warranty, expressed or implied, concerning the component supports described in this Data Report. Furthermore, neither the Inspector nor his employer shall be liable in any manner for any personal injury or property damage or a loss of any kind arising from or connected with this inspection.

Date 1/25/80.

Signed William Meyer Commissions N.Y. Comm #2770 / Ohio Comm
(Nat'l Bd., State, Prov., and No.)

CERTIFICATION OF FIELD INSPECTION

I, the undersigned, holding a valid commission issued by the National Board of Boiler and Pressure Vessel Inspectors and the State or Province of _____ and employed by _____ of _____ have compared the statements in this Data Report with the described component supports and state that parts referred to as data items _____, not included in the certificate of shop inspection, have been inspected by me and that to the best of my knowledge and belief the NPT Certificate Holder has constructed these component supports in accordance with the ASME Code for Nuclear Power Plant Components.

By signing this certificate neither the Inspector nor his employer makes any warranty, expressed or implied, concerning the component supports described in this Data Report. Furthermore, neither the inspector nor his employer shall be liable in any manner for any personal injury or property damage or a loss of any kind arising from or connected with this inspection.

Date _____.

Signed _____ Commissions _____
(Nat'l Bd., State, Prov., and No.)

PLAN No 2-2186

ENERGY NORTHWEST
People · Vision · Solutions

FORM NIS-2 OWNER'S REPORT FOR REPAIR/REPLACEMENT ACTIVITY
As Required By The Provisions Of The ASME Code Section XI

1. Owner: Energy Northwest
Address: Columbia Generating Station, North Power Plant Loop, Richland, Washington, 99352
2. Plant: Columbia Generating Station
Address: Columbia Generating Station, North Power Plant Loop, Richland, Washington, 99352

Date: 07/21/2009
Sheet: 1 Of 1
Unit: Not Applicable

3. (a) Work Performed By: Energy Northwest
(b) Repair/Replacement Organization P.O. No, Job No, etc.: Energy Northwest
(c) Type Code Symbol Stamp: Not Applicable
(d) Certificate Of Authorization No.: Not Applicable
(e) Expiration Date: Not Applicable
4. Identification Of System: Residual Heat Removal (RHR) System
5. (a) Applicable Construction Code: ASME Section III, Code Class 1, 1974 Edition with Summer 1975 Addenda, Code Case: Note 1
(b) Applicable Edition Of ASME Section XI Used For Repair/Replacement Activity: 2001 Edition with 2003 Addenda
(c) Applicable ASME Section XI Case(s): None
6. Identification Of Components

Name Of Component	Name Of Manufacturer	Manufacturer's Serial No	National Board No	Other I.D.	Year Built	Corrected, Removed Or Installed	ASME Code Stamped (Yes Or No) Code Class
RHR-V-85A	Borg Warner	24985	N/A	N/A	1878	Corrected (Repaired)	Yes, Code Class 1

7. Description Of Work Performed: Performed repair work on valve RHR-V-85A, Serial No 24985. The repair work was performed as follows:

1) Cut/ground valve body to bonnet seal weld.
2) Prepped valve body cut/ground surfaces.
3) Performed liquid penetrant (PT) examination on the final valve body prepped surfaces. Liquid penetrant (PT) examination results acceptable.
4) Prepped valve bonnet cut/ground surfaces.
5) Performed liquid penetrant (PT) examination on the final valve bonnet prepped surfaces. Liquid penetrant (PT) examination results acceptable.
6) Reassemble valve parts.
7) Made valve body to bonnet seal weld.
8) Performed visual examination on the final valve body to bonnet seal weld. Visual examination results acceptable.
9) Performed liquid penetrant (PT) examination on the final valve body to bonnet seal weld. Liquid penetrant (PT) examination results acceptable.

NOTES -

1) The applicable ASME Code Cases, if any are listed on the ASME Code Data Report.

PLAN No 2-2186

ENERGY NORTHWEST
People · Vision · Solutions

FORM NIS-2 OWNER'S REPORT FOR REPAIR/REPLACEMENT ACTIVITY (Back)

8 Tests Conducted: Hydrostatic [ ] **Pneumatic** [ ] **Nominal Operating Pressure** [X] **Other** [ ]
Exempt [ ] **Test Pressure:** 115 Psig **Test Temperature:** 77.7° F

9. Remarks (Applicable Manufacturer's Data Reports to be attached): None

CERTIFICATE OF COMPLIANCE

I certify that the statements made in this Owner's Report are correct and that this conforms to the requirements of the ASME Code, Section XI.
Type Code Symbol Stamp: Not Applicable
Certificate Of Authorization No.: Not Applicable
Expiration Date: Not Applicable

Prepared By Kuldip Singh - Program Lead Engineer (PLE) ***Signed By*** Kuldip Singh - Program Lead Engineer (PLE)

Date 7/21/09 ***Date*** 7/21/09

CERTIFICATE OF INSERVICE INSPECTION

I, the undersigned, holding a valid commission issued by the National Board of Boiler and Pressure Vessel Inspectors and the State of Washington ***and employed by*** Hartford Steam Boiler Of Connecticut of Hartford, Connecticut ***have inspected the components described in this Owner's Report during the period*** 5-4-09 ***to*** 8-11-09 ***and state to the best of my knowledge and belief, the Owner has performed examinations and taken corrective measures described in this Owner's Report in accordance with the requirements of the ASME Code, Section XI.***
By signing this certificate neither the Inspector nor his employer makes any warranty, expressed or implied, concerning the examinations and corrective measures described in this Owner's Report. Furthermore, neither the Inspector nor his employer shall be liable in any manner for any personal injury or property damage or a loss of any kind arising from or connected with this inspection.

Inspector's Signature ***Commissions*** 13324, W, ANI
National Board, State, and Endorsements

Date 8-11-2009

PLAN No 2-2190

ENERGY NORTHWEST
People · Vision · Solutions

FORM NIS-2 OWNER'S REPORT FOR REPAIR/REPLACEMENT ACTIVITY
As Required By The Provisions Of The ASME Code Section XI

1. Owner: Energy Northwest
Address: Columbia Generating Station, North Power Plant Loop, Richland, Washington, 99352
2. Plant: Columbia Generating Station
Address: Columbia Generating Station, North Power Plant Loop, Richland, Washington, 99352

Date: 07/21/2009
Sheet: 1 Of 2
Unit: Not Applicable

3. (a) Work Performed By: Energy Northwest
(b) Repair/Replacement Organization P.O. No, Job No, etc.: Energy Northwest
(c) Type Code Symbol Stamp: Not Applicable
(d) Certificate Of Authorization No.: Not Applicable
(e) Expiration Date: Not Applicable
4. Identification Of System: Reactor Closed Cooling (Water) (RCC) System
5. (a) Applicable Construction Code: ASME Section III, Code Class 3, 1971 Edition with Winter 1973 Addenda, Code Case: Note 1
(b) Applicable Edition Of ASME Section XI Used For Repair/Replacement Activity: 2001 Edition with 2003 Addenda
(c) Applicable ASME Section XI Case(s): None
6. Identification Of Components

Name Of Component	Name Of Manufacturer	Manufacturer's Serial No	National Board No	Other I.D.	Year Built	Corrected, Removed Or Installed	ASME Code Stamped (Yes Or No) Code Class
RCC(3)-1	WPPSS*	RCC(3)-1-P1	N/A	N/A	1983	See Item 7 Below	Yes, Code Class 3

7. Description Of Work Performed: Replaced existing studs and nuts for the piping bolted flanged joints. The replacement work was performed as follows:

DWG No RCC-831-48.51 - MOTOR COOLER "B" SUPPLY LINE CONNECTION

1) Removed existing studs.
2) Removed existing nuts.
3) Installed four (4) replacement studs.
4) Installed eight (8) replacement nuts.
5) Performed VT-2 visual examination during pressure test to confirm pressure boundary integrity of the joint. No evidence of leakage during the pressure test.

DWG No RCC-831-48.51 - MOTOR COOLER "D" SUPPLY LINE CONNECTION

1) Removed existing studs.
2) Removed existing nuts.
3) Installed four (4) replacement studs.
4) Installed eight (8) replacement nuts.
5) Performed VT-2 visual examination during pressure test to confirm pressure boundary integrity of the joint. No evidence of leakage during the pressure test.

Continued On Sheet 2 of 2

PLAN No 2-2190

ENERGY NORTHWEST
People · Vision · Solutions

FORM NIS-2 OWNER'S REPORT FOR REPAIR/REPLACEMENT ACTIVITY (Back)

8 Tests Conducted: Hydrostatic [ ] **Pneumatic** [ ] **Nominal Operating Pressure** [X] **Other** [ ]
Exempt [ ] **Test Pressure:** 94 Psig **Test Temperature:** 77° F

9. Remarks (Applicable Manufacturer's Data Reports to be attached): None

CERTIFICATE OF COMPLIANCE

I certify that the statements made in this Owner's Report are correct and that this conforms to the requirements of the ASME Code, Section XI.
Type Code Symbol Stamp: Not Applicable
Certificate Of Authorization No.: Not Applicable
Expiration Date: Not Applicable

Prepared By Kuldip Singh - Program Lead Engineer (PLE) ***Signed By*** Kuldip Singh - Program Lead Engineer (PLE)

Date 7/21/09 ***Date*** 7/21/09

CERTIFICATE OF INSERVICE INSPECTION

I, the undersigned, holding a valid commission issued by the National Board of Boiler and Pressure Vessel Inspectors and the State of Washington ***and employed by*** Hartford Steam Boiler Of Connecticut of Hartford, Connecticut ***have inspected the components described in this Owner's Report during the period*** 5/4/2009 ***to*** 7/27/2009 ***and state to the best of my knowledge and belief, the Owner has performed examinations and taken corrective measures described in this Owner's Report in accordance with the requirements of the ASME Code, Section XI.***
By signing this certificate neither the Inspector nor his employer makes any warranty, expressed or implied, concerning the examinations and corrective measures described in this Owner's Report. Furthermore, neither the Inspector nor his employer shall be liable in any manner for any personal injury or property damage or a loss of any kind arising from or connected with this inspection.

Frank G. Allegrei — Inspector's Signature

Commissions 13324 W ANI — National Board, State, and Endorsements

Date 7/27/2009

PLAN No 2-2190

ENERGY NORTHWEST
People · Vision · Solutions

FORM NIS-2 OWNER'S REPORT FOR REPAIR/REPLACEMENT ACTIVITY
As Required By The Provisions Of The ASME Code Section XI

Date: 07/21/2009
Sheet: 2 Of 2
Unit: Not Applicable

1. Owner: Energy Northwest
Address: Columbia Generating Station, North Power Plant Loop, Richland, Washington, 99352
2. Plant: Columbia Generating Station
Address: Columbia Generating Station, North Power Plant Loop, Richland, Washington, 99352
3. (a) Work Performed By: Energy Northwest
(b) Repair/Replacement Organization P.O. No, Job No, etc.: Energy Northwest
(c) Type Code Symbol Stamp: Not Applicable
(d) Certificate Of Authorization No.: Not Applicable
(e) Expiration Date: Not Applicable
4. Identification Of System: Reactor Closed Cooling (Water) (RCC) System
5. (a) Applicable Construction Code: ASME Section III, Code Class 3, 1971 Edition with Winter 1973 Addenda, Code Case: Note 1
(b) Applicable Edition Of ASME Section XI Used For Repair/Replacement Activity: 2001 Edition with 2003 Addenda
(c) Applicable ASME Section XI Case(s): None
6. Identification Of Components

Name Of Component	Name Of Manufacturer	Manufacturer's Serial No	National Board No	Other I.D.	Year Built	Corrected, Removed Or Installed	ASME Code Stamped (Yes Or No) Code Class
RCC(3)-1	WPPSS*	RCC(3)-1-P1	N/A	N/A	1983	See Item 7 Below	Yes, Code Class 3

7. Description Of Work: Continuation From Sheet 1 of 2

DWG No RCC-831-48,51 -ITEM 10/11 CONNECTION

1) Removed existing studs.
2) Removed existing nuts.
3) Installed four (4) replacement studs.
4) Installed eight (8) replacement nuts.
5) Performed VT-2 visual examination during pressure test to confirm pressure boundary integrity of the joint. No evidence of leakage during the pressure test.

NOTES -
1) The applicable ASME Code Cases, if any are listed on the ASME Code Data Reports.
2) * Company name changed from Washington Public Power Supply System (WPPSS) to Energy Northwest (EN) in 1999.

Rudy Singh
7/21/09

FORM NIS-2 OWNER'S REPORT FOR REPAIR/REPLACEMENT ACTIVITY

As Required by the Provisions of the ASME Code Section XI

1. **Owner:** Energy Northwest
   Address P.O. Box 968
   Richland, WA 99352

   Date: 7/22/09

   Sheet: 1 of 1

2. **Plant:** Columbia Generating Station
   Address 76 North Power Plant Loop
   Richland, WA 99354

   Unit: 2

   Repair/Replacement Organization Work Order No. 01151505
   Work Plan No. 2-2191

3. **Work Performed by:** Energy Northwest
   Address: 76 North Power Plant Loop
   Richland, WA 99354

   Type Code Symbol Stamp: Not Applicable
   Authorization No. Not Applicable
   Expiration Date: Not Applicable

4. **Identification of System:** Reactor Building Closed Cooling Water (RCC)

5. (a) **Applicable Construction Code:** ASME Section III **Edition:** 1971 **Addenda:** W73 **Code Case:** (see Data Report)
   (b) **Applicable Edition of Section XI Used for Repair/Replacement Activity:** 2001 **Addenda:** 2003
   (c) **Applicable Section XI Code Case(s):** NA

6. **Identification of Components:**

Name of Component	*Name of Manufacturer*	*Manufacturer Serial No.*	*NB No.*	*Other No.*	*Year Built*	*Corrected, Removed, or Installed*	*ASME Code Stamped (Yes or No)*
Piping: RRC(25)-1	Bechtel	RCC(36)-1-P1	N/A	N/A	1983	Corrected	Yes

7. **Description of Work:**

Mechanically replaced 16 studs and 32 nuts on four (4) RRC-P-1B (Pump) RCC Motor Cooler return piping flanges. Piping system S/N RCC(36)-1-P1 is an ASME Section III Code Class 3 system. A System Leakage Test and VT-2 Visual Examination were successfully performed.

8. **Test Conducted:** **Hydrostatic** ☐ **Pneumatic** ☐ **Nominal Operating Pressure** ☑ **Exempt** ☐
   Other ☐ **Pressure (psi):** 94 **Test Temperature (°F):** 77

FORM NIS-2 OWNER'S REPORT FOR REPAIR/REPLACEMENT ACTIVITY

As Required by the Provisions of the ASME Code Section XI

FORM NIS-2 (Back)

9. **Remarks:**

CERTIFICATE OF COMPLIANCE

I certify that the statements made in the report are correct and that this conforms to the requirements of the ASME Code, Section XI.

Type Code Symbol Stamp: Not Applicable
Certificate of Authorization No.: Not Applicable
Expiration Date: Not Applicable

Signed: R Ladalla PLE
Owner or Owner's Designee, Title

Date: 7/22/09

CERTIFICATE OF INSERVICE INSPECTION

I, the undersigned, holding a valid commission issued by the National Board of Boiler and Pressure Vessel Inspectors and the State or Province of Washington and employed by Hartford Steam Boiler of Connecticut of Hartford, Connecticut have inspected the components described in this Owner's Report during the period 5-4-09 to 8-17-09, and state that to the best of my knowledge and belief, the Owner has performed examinations and taken corrective measures described in this Owner's Report in accordance with the requirements of the ASME Code, Section XI.

By signing this certificate neither the inspector nor his employer makes any warranty, expressed or implied, concerning the examinations and corrective measures described in this Owner's Report. Furthermore, neither the inspector nor his employer shall be liable in any manner for any personal injury or property damage or a loss of any kind arising from or connected with this inspection.

Frank A Allegari
Inspector's Signature

Commissions: 13324 W ANI
National Board, State, Province, and Endorsements

Date: 8-17-2009

PLAN No 2-2192

ENERGY NORTHWEST
People · Vision · Solutions

FORM NIS-2 OWNER'S REPORT FOR REPAIR/REPLACEMENT ACTIVITY
As Required By The Provisions Of The ASME Code Section XI

1. Owner: Energy Northwest
Address: Columbia Generating Station, North Power Plant Loop, Richland, Washington, 99352
2. Plant: Columbia Generating Station
Address: Columbia Generating Station, North Power Plant Loop, Richland, Washington, 99352

Date: 08/11/2009
Sheet: 1 Of 1
Unit: Not Applicable

3. (a) Work Performed By: Energy Northwest
(b) Repair/Replacement Organization P.O. No, Job No, etc.: Energy Northwest
(c) Type Code Symbol Stamp: Not Applicable
(d) Certificate Of Authorization No.: Not Applicable
(e) Expiration Date: Not Applicable
4. Identification Of System: Reactor Core Isolation Cooling (RCIC) System
5. (a) Applicable Construction Code: ASME Section III, Code Class 2, 1971 Edition with Summer 1972 Addenda, Code Case: Note 1
(b) Applicable Edition Of ASME Section XI Used For Repair/Replacement Activity: 2001 Edition with 2003 Addenda
(c) Applicable ASME Section XI Case(s): None
6. Identification Of Components

Name Of Component	Name Of Manufacturer	Manufacturer's Serial No	National Board No	Other I.D.	Year Built	Corrected, Removed Or Installed	ASME Code Stamped (Yes Or No) Code Class
RCIC-V-22	Anchor Darling	2N-365	N/A	N/A	1975	See Item 7 Below	Yes, Code Class 2
Disc	Anchor Darling	4870E-6	N/A	N/A	1975	Removed	No, Code Class 2 *
Disc	Flowserve	92975-1	N/A	N/A	2007	Installed	Yes, Code Class 2
Bonnet	Anchor Darling	4893E-1	N/A	N/A	1975	Removed	No, Code Class 2 *
Bonnet	Flowserve	92824-1	N/A	N/A	2007	Installed	Yes, Code Class 2

7. Description Of Work Performed: Replaced existing disc and bonnet for valve RCIC-V-22. The replacement work was performed as follows:

1) Removed existing bonnet from valve RCIC-V-22.
2) Removed existing gasket retaining ring.
3) Removed existing disc from valve RCIC-V-22.
4) Tack welded disc to disc skirt.
5) Performed visual examination on the final tack weld. Visual examination results acceptable.
6) Performed liquid penetrant (PT) examination on the final tack weld. Liquid penetrant (PT) examination results acceptable.
7) Installed replacement disc, Serial No 92975-1 in valve RCIC-V-22.
8) Installed replacement gasket retaining ring.
9) Installed replacement bonnet, Serial No 92824-1 in valve RCIC-V-22.
10) Performed VT-2 visual examination during pressure test to confirm pressure boundary integrity of the joint. No evidence of leakage during the pressure test.

NOTES -

1) The applicable ASME Code Cases, if any are listed on the ASME Code Data Reports.
2) * The existing disc was furnished as part of fully assembled ASME Code stamped valve RCIC-V-22, Serial No 2N-365.
3) * The existing bonnet was furnished as part of fully assembled ASME Code stamped valve RCIC-V-22, Serial No 2N-365.
4) OEM/OES Anchor Darling parts are now being manufactured by OEM/OES Flowserve.

PLAN No 2-2192

ENERGY NORTHWEST
People · Vision · Solutions

FORM NIS-2 OWNER'S REPORT FOR REPAIR/REPLACEMENT ACTIVITY (Back)

8 Tests Conducted: Hydrostatic [ ] **Pneumatic** [ ] **Nominal Operating Pressure** [X] **Other** [ ]
Exempt [ ] **Test Pressure:** 270 Psig **Test Temperature:** 88° F

9. Remarks (Applicable Manufacturer's Data Reports to be attached): See attached N-2 Code Data Reports for the following replacement parts:

Part	Serial No
Disc	92975-1
Bonnet	92824-1

CERTIFICATE OF COMPLIANCE

I certify that the statements made in this Owner's Report are correct and that this conforms to the requirements of the ASME Code, Section XI.
Type Code Symbol Stamp: Not Applicable
Certificate Of Authorization No.: Not Applicable
Expiration Date: Not Applicable

Prepared By Kuldip Singh ~~Program~~ Lead Engineer (PLE) ***Signed By*** Kuldip Singh - Program Lead Engineer (PLE)

Date 8/12/09 ***Date*** 8/12/09

CERTIFICATE OF INSERVICE INSPECTION

I, the undersigned, holding a valid commission issued by the National Board of Boiler and Pressure Vessel Inspectors and the State of Washington ***and employed by*** Hartford Steam Boiler Of Connecticut of Hartford, Connecticut ***have inspected the components described in this Owner's Report during the period*** 5-4-09 ***to*** 8-12-09 ***and state to the best of my knowledge and belief, the Owner has performed examinations and taken corrective measures described in this Owner's Report in accordance with the requirements of the ASME Code, Section XI.***
By signing this certificate neither the Inspector nor his employer makes any warranty, expressed or implied, concerning the examinations and corrective measures described in this Owner's Report. Furthermore, neither the Inspector nor his employer shall be liable in any manner for any personal injury or property damage or a loss of any kind arising from or connected with this inspection.

Frank A Allegrini — Inspector's Signature ***Commissions*** 13324 W ANI — National Board, State, and Endorsements

Date 8-12-2009

PCAN No. 2-2192

FORM N-2 CERTIFICATE HOLDERS' DATA REPORT FOR IDENTICAL NUCLEAR PARTS AND APPURTENANCES*

As Required by the Provisions of the ASME Code, Section III
Not to Exceed One Day's Production

Page 1 of 2

7/21/09

1. Manufactured and certified by Flowserve Corporation 1900 S. Saunders St. Raleigh, NC 27603 (name and address of NPT Certificate Holder)
2. Manufactured for Energy Northwest/Accts Payable/ P.O. Box 968 Richland, WA 99352-0968 (name and address of purchaser)
3. Location of installation Energy Northwest/ Columbia Generating Station/Richland, WA 99352 (name and address)
4. Type 2653-3 R/B (drawing no.) | ASME SA105 (mat'l. spec. no.) | N/A (tensile strength) | N/A (CRN) | 2007 (year built)
5. ASME Code, Section III, Division 1: 1971 (edition) | * WINTER 1972 (addenda date) | 2 (class) | N/A (Code Case no.)
6. Fabricated in accordance with Const. Spec. (Div. 2 only) N/A (no.) Revision N/A Date N/A
7. Remarks: Disc for a 6" 900# Globe Valve

* ALSO MEETS THRU SUMMER 1977 ADDENDA

8. Nom. thickness (in.) N/A Min. design thickness (in.) Per #4 Dia. ID (ft & in.) N/A Length overall (ft & in.) N/A
9. *When applicable, Certificate Holders' Data Reports are attached for each item of this report:*

Part or Appurtenance Serial Number	National Board No. in Numerical Order	Part or Appurtenance Serial Number	National Board No. in Numerical Order
(1) 92975-1	N/A	(26)	
(2) 92975-2	N/A	(27)	
(3)		(28)	
(4)		(29)	
(5)		(30)	
(6)		(31)	
(7) RCIC-V-22, DISC S/N 92975-1		(32)	
(8)		(33)	
(9)		(34)	
(10)		(35)	
(11)		(36)	
(12)		(37)	
(13)		(38)	
(14)		(39)	
(15)		(40)	
(16)		(41)	
(17)		(42)	
(18)		(43)	
(19)		(44)	
(20)		(45)	
(21)		(46)	
(22)		(47)	
(23)		(48)	
(24)		(49)	
(25)		(50)	

10. Design pressure _____ psi. Temp. _____ °F. Hydro. test pressure _____ (when applicable) at temp. °F

* Supplemental information in the form of lists, sketches, or drawings may be used provided (1) size is 8½ x 11, (2) information in items 2,and 3 on this Data Report is included on each sheet, (3) each sheet is numbered and the number of sheets is recorded at the top of this form.

(11/05)

FORM N-2 (Back — Pg. 2 of 2)

Certificate Holder's Serial Nos. 92975-1 through 92975-2

CERTIFICATION OF DESIGN

Design specifications certified by David J. Murphy (when applicable) P.E. State Washington Reg. no. 12542

Design report* certified by N/A (when applicable) P.E. State N/A Reg. no. N/A

CERTIFICATE OF COMPLIANCE

We certify that the statements made in this report are correct and that this (these) Parts conforms to the rules of construction of the ASME Code, Section III, Division 1.

NPT Certificate of Authorization No. N-1563 Expires 11-26-08

Date 11/26/07 Name Flowserve Corporation (NPT Certificate Holder) Signed (Authorized representative)

CERTIFICATE OF INSPECTION

I, the undersigned, holding a valid commission issued by the National Board of Boiler and Pressure Vessel Inspectors and the State or Province of NC and employed by HSB CT of Hartford, CT have inspected these items described in this Data Report on 11/22/07, and state that to the best of my knowledge and belief, the Certificate Holder has fabricated these parts or appurtenances in accordance with the ASME Code, Section III, Division 1. Each part listed has been authorized for stamping on the date shown above.

By signing this certificate, neither the inspector nor his employer makes any warranty, expressed or implied, concerning the equipment described in this Data Report. Furthermore, neither the inspector nor his employer shall be liable in any manner for any personal injury or property damage or loss of any kind arising from or connected with this inspection.

Date 11/22/07 Signed M. Hrac (Authorized Nuclear Inspector) Commissions NC 1435 [Nat'l. Bd. (incl. endorsements) and state or prov. and no.]

PLAN NO. 2-2192

FORM N-2 CERTIFICATE HOLDERS' DATA REPORT FOR IDENTICAL NUCLEAR PARTS AND APPURTENANCES*

As Required by the Provisions of the ASME Code, Section III
Not to Exceed One Day's Production

Rudolf Buys 7/21/09.

1. Manufactured and certified by Flowserve Corporation 1900 S. Saunders St. Raleigh, NC 27603 (name and address of NPT Certificate Holder)
2. Manufactured for Energy Northwest/Accts Payable/ P.O. Box 968 Richland, WA 99352-0968 (name and address of purchaser)
3. Location of installation Energy Northwest/ Columbia Generating Station/Richland, WA 99352 (name and address)
4. Type

(drawing no.)	(mat'l. spec. no.)	(tensile strength)	(CRN)	(year built)
2653-3 R/B	ASME SA105	N/A	N/A	2007

5. ASME Code, Section III, Division 1:

(edition)	(addenda date)	(class)	(Code Case no.)
1971	* WINTER 1972	2	N/A

6. Fabricated in accordance with Const. Spec. (Div. 2 only) N/A (no.) Revision N/A Date N/A
7. Remarks: Bonnet for a 6" 900# Globe Valve

* ALSO MEETS THRU SUMMER 1977 ADDENDA

8. Nom. thickness (in.) N/A Min. design thickness (in.) Per #4 Dia. ID (ft & in.) N/A Length overall (ft & in.) N/A
9. When applicable, Certificate Holders' Data Reports are attached for each item of this report:

Part or Appurtenance Serial Number	National Board No. in Numerical Order	Part or Appurtenance Serial Number	National Board No. in Numerical Order
(1) 92824-1	N/A	(26)	
(2)		(27)	
(3)		(28)	
(4)		(29)	
(5)		(30)	
(6) RCIC-V-22, BONNET		(31)	
(7)		(32)	
(8)		(33)	
(9) S/N 92824-1		(34)	
(10)		(35)	
(11)		(36)	
(12)		(37)	
(13)		(38)	
(14)		(39)	
(15)		(40)	
(16)		(41)	
(17)		(42)	
(18)		(43)	
(19)		(44)	
(20)		(45)	
(21)		(46)	
(22)		(47)	
(23)		(48)	
(24)		(49)	
(25)		(50)	

10. Design pressure _____ psi. Temp. _____ °F. Hydro. test pressure _____ (when applicable) at temp. °F

* Supplemental information in the form of lists, sketches, or drawings may be used provided (1) size is 8½ x 11, (2) information in items 2 and 3 on this Data Report is included on each sheet, (3) each sheet is numbered and the number of sheets is recorded at the top of this form.

(11/05)

Certificate Holder's Serial Nos. 92824-1 through _____

CERTIFICATION OF DESIGN

Design specifications certified by David J. Murphy (when applicable) P.E. State WA Reg. no. 12542

Design report* certified by N/A (when applicable) P.E. State N/A Reg. no. N/A

CERTIFICATE OF COMPLIANCE

We certify that the statements made in this report are correct and that this (these) Parts conforms to the rules of construction of the ASME Code, Section III, Division 1.

NPT Certificate of Authorization No. N-1563 Expires 11-26-09

Date 12/7/07 Name Flowserve Corporation (NPT Certificate Holder) Signed [signature] (authorized representative)

CERTIFICATE OF INSPECTION

I, the undersigned, holding a valid commission issued by the National Board of Boiler and Pressure Vessel Inspectors and the State or Province of NC and employed by HSB CT of Hartford, CT have inspected these items described in this Data Report on 12-7-07, and state that to the best of my knowledge and belief, the Certificate Holder has fabricated these parts or appurtenances in accordance with the ASME Code, Section III, Division 1. Each part listed has been authorized for stamping on the date shown above.

By signing this certificate, neither the inspector nor his employer makes any warranty, expressed or implied, concerning the equipment described in this Data Report. Furthermore, neither the inspector nor his employer shall be liable in any manner for any personal injury or property damage or loss of any kind arising from or connected with this inspection.

Date 12-7-07 Signed [signature] (Authorized Nuclear Inspector) Commissions NC1083 (Nat'l. Bd. (incl. endorsements) and state or prov. and no.)

FORM NIS-2 OWNER'S REPORT FOR REPAIR/REPLACEMENT ACTIVITY

As Required by the Provisions of the ASME Code Section XI

1. **Owner:** Energy Northwest
   Address P.O. Box 968
   Richland, WA 99352

   Date: 6/22/09

   Sheet: 1 of 1

2. **Plant:** Columbia Generating Station
   Address 76 North Power Plant Loop
   Richland, WA 99354

   Unit: 2

   Repair/Replacement Organization Work Order No. 01160543
   Work Plan No. 2-2195

3. **Work Performed by:** Energy Northwest
   Address: 76 North Power Plant Loop
   Richland, WA 99354

   Type Code Symbol Stamp: Not Applicable
   Authorization No. Not Applicable
   Expiration Date: Not Applicable

4. **Identification of System:** Fuel Pool Cooling (FPC)

5. (a) **Applicable Construction Code:** ASME Section III **Edition:** 1971 **Addenda:** W73 **Code Case:** (see Data Report)

   (b) **Applicable Edition of Section XI Used for Repair/Replacement Activity:** 2001 **Addenda:** 2003

   (c) **Applicable Section XI Code Case(s):** N/A

6. **Identification of Components:**

Name of Component	*Name of Manufacturer*	*Manufacturer Serial No.*	*NB No.*	*Other No.*	*Year Built*	*Corrected, Removed, or Installed*	*ASME Code Stamped (Yes or No)*
Pump: FPC-P-1B	Worthington Pump	3 LR-9	24	N/A	1977	Corrected	Yes
Piping: FPC(1)-1-P1	Installer: Bechtel	FPC(1)-1-P1	N/A	N/A	1983	Corrected	Yes

7. **Description of Work:**

Pump FPC-P-1B Casing and Drain Flange studs and nuts were mechanically replaced to facilitate pump maintenance. FPC-P-1B was constructed to ASME Code Class 3 (1971 Edition with Winter 1973 Addenda). The Drain Piping System FPC(1)-1-P1 was constructed/installed by Bechtel in accordance with ASME Code Class 3 (1971 Edition with Winter 1973 Addenda). Following the mechanical installation, a System Leakage Test and VT-2 Visual Examination were successfully performed.

8. **Test Conducted:** **Hydrostatic** ☐ **Pneumatic** ☐ **Nominal Operating Pressure** ☑ **Exempt** ☐

   Other ☐ **Pressure (psi):** 82 **Test Temperature (°F):** 93

FORM NIS-2 OWNER'S REPORT FOR REPAIR/REPLACEMENT ACTIVITY

As Required by the Provisions of the ASME Code Section XI

FORM NIS-2 (Back)

9. **Remarks:**

The replacement Stud material is SA-193 Grade B7. The replacement Nut material is SA-194 Grade 7. The replacement bolting materials meet the Owner's Requirements and ASME Section XI.

CERTIFICATE OF COMPLIANCE

I certify that the statements made in the report are correct and that this conforms to the requirements of the ASME Code, Section XI.

Type Code Symbol Stamp: Not Applicable
Certificate of Authorization No.: Not Applicable **Expiration Date:** Not Applicable

Signed: PLE **Date:** 6/22/09
Owner or Owner's Designee, Title

CERTIFICATE OF INSERVICE INSPECTION

I, Link J. Sherman, the undersigned, holding a valid commission issued by the National Board of Boiler and Pressure Vessel Inspectors and the State or Province of Washington and employed by Hartford Steam Boiler of Connecticut of Hartford, Connecticut have inspected the components described in this Owner's Report during the period 2/25/2009 to 7/16/2009, and state that to the best of my knowledge and belief, the Owner has performed examinations and taken corrective measures described in this Owner's Report in accordance with the requirements of the ASME Code, Section XI.

By signing this certificate neither the Inspector nor his employer makes any warranty, expressed or implied, concerning the examinations and corrective measures described in this Owner's Report. Furthermore, neither the Inspector nor his employer shall be liable in any manner for any personal injury or property damage or a loss of any kind arising from or connected with this inspection.

Inspector's Signature **Commissions:** 13172 WANI
National Board, State, Province, and Endorsement

Date: 7/16/2009

PLAN No 2-2196

ENERGY NORTHWEST
People·Vision·Solutions

FORM NIS-2 OWNER'S REPORT FOR REPAIR/REPLACEMENT ACTIVITY
As Required By The Provisions Of The ASME Code Section XI

Date: 07/13/2009
Sheet: 1 Of 1
Unit: Not Applicable

1. **Owner:** Energy Northwest
   Address: Columbia Generating Station, North Power Plant Loop, Richland, Washington, 99352
2. **Plant:** Columbia Generating Station
   Address: Columbia Generating Station, North Power Plant Loop, Richland, Washington, 99352
3. (a) **Work Performed By:** Energy Northwest
   (b) **Repair/Replacement Organization P.O. No, Job No, etc.:** Energy Northwest
   (c) **Type Code Symbol Stamp:** Not Applicable
   (d) **Certificate Of Authorization No.:** Not Applicable
   (e) **Expiration Date:** Not Applicable
4. **Identification Of System:** main Steam (MS) System
5. (a) **Applicable Construction Code:** ASME Section III, Code Class 1, 1971 Edition with Winter 1971 Addenda, Code Case: Note 1
   (b) **Applicable Edition Of ASME Section XI Used For Repair/Replacement Activity:** 2001 Edition with 2003 Addenda
   (c) **Applicable ASME Section XI Case(s):** None
6. **Identification Of Components**

Name Of Component	Name Of Manufacturer	Manufacturer's Serial No	National Board No	Other I.D.	Year Built	Corrected, Removed Or Installed	ASME Code Stamped (Yes Or No) Code Class
MS-V-22D	Rockwell	JT-41	68	N/A	1973	See Item 7 Below	Yes, Code Class 1
Pilot Disc	Flowserve	91219-1	N/A	N/A	2007	See Item 7 Below	Yes, Code Class 1
Main disc	Flowserve	89220-1	N/A	N/A	2006	See Item 7 Below	Yes, Code Class 1

7. **Description Of Work Performed:** Assembled pilot disc (stem disc) main disc (piston disc) for use for valve MS-V-22D, Serial No JT-41. The parts were assembled as follows:
   1) Assembled pilot disc (stem disc) Serial No 91219-1 and main disc (piston disc) Serial No 89220-1.

NOTES

1) The applicable ASME Code Cases, if any are listed on the ASME Code Data Reports.
2) The ASME Section XI plans applicable to pilot disc (stem disc) and main disc (piston disc) for valve MS-V-22D are as follows:
   ASME Section XI Plan No 2-2196 - Assembled pilot disc (stem disc) and main disc (piston disc) for valve MS-V-22D.
   ASME Section XI Plan No 2-2197 - Replaced pilot disc (stem disc) and main disc (piston disc) for valve MS-V-22D.
3) OEM/OES Rockwell International/Edward Valves, Inc valves/parts are now being manufactured by OEM/OES Flowserve.

PLAN No 2-2196

ENERGY NORTHWEST
People · Vision · Solutions

FORM NIS-2 OWNER'S REPORT FOR REPAIR/REPLACEMENT ACTIVITY (Back)

8 Tests Conducted: Hydrostatic ☐ **Pneumatic** ☐ **Nominal Operating Pressure** ☐ **Other** ☐ *
Exempt ☐ **Test Pressure:** Psig **Test Temperature:** °F

9. Remarks (Applicable Manufacturer's Data Reports to be attached): 1) See attached N-2 Code Data Reports for the following replacement parts:

Part Description	Serial No
Pilot disc (stem disc)	91219-1
Main disc (piston disc)	89220-1

2) * See ASME Section XI Plan No 2-2197 for the pressure test.

CERTIFICATE OF COMPLIANCE

I certify that the statements made in this Owner's Report are correct and that this conforms to the requirements of the ASME Code, Section XI.
Type Code Symbol Stamp: Not Applicable
Certificate Of Authorization No.: Not Applicable
Expiration Date: Not Applicable

Prepared By Kuldip Singh - Program Lead Engineer (PLE) ***Signed By*** Kuldip Singh - Program Lead Engineer (PLE)

Date 7/13/09 ***Date*** 7/13/09

CERTIFICATE OF INSERVICE INSPECTION

I, the undersigned, holding a valid commission issued by the National Board of Boiler and Pressure Vessel Inspectors and the State of Washington ***and employed by*** Hartford Steam Boiler Of Connecticut of Hartford, Connecticut ***have inspected the components described in this Owner's Report during the period*** 2/11/2009 ***to*** 7/15/2009 ***and state to the best of my knowledge and belief, the Owner has performed examinations and taken corrective measures described in this Owner's Report in accordance with the requirements of the ASME Code, Section XI.***
By signing this certificate neither the Inspector nor his employer makes any warranty, expressed or implied, concerning the examinations and corrective measures described in this Owner's Report. Furthermore, neither the Inspector nor his employer shall be liable in any manner for any personal injury or property damage or a loss of any kind arising from or connected with this inspection.

Inspector's Signature ***Commissions*** 13172 WANI
National Board, State, and Endorsements

Date 7/15/2009

PLAN NO. 2-2196

FORM N-2 CERTIFICATE HOLDERS' DATA REPORT FOR IDENTICAL NUCLEAR PARTS AND APPURTENANCES*

As Required by the Provisions of the ASME Code, Section III
Not to Exceed One Day's Production

Philip Rings 7/13/05.

1. Manufactured and certified by Flowserve Corporation 1900 S. Saunders St. Raleigh, NC 27603 (name and address of NPT Certificate Holder)
2. Manufactured for Energy Northwest/Accts Payable/ P.O. Box 968 Richland, WA 99352-0968 (name and address of purchaser)
3. Location of installation Energy Northwest/ Columbia Generating Station/Richland, WA 99352 (name and address)
4. Type

(drawing no.)	(mat'l. spec. no.)	(tensile strength)	(CRN)	(year built)
PD-422885 R/F sht 3B of 10	ASME SA105	N/A	N/A	2007

5. ASME Code, Section III, Division 1:

(edition)	(addenda date)	(class)	(Code Case no.)
* 1971	Winter 1971	1	N/A

6. Fabricated in accordance with Const. Spec. (Div. 2 only) N/A (no.) Revision N/A Date N/A
7. Remarks: Stem-disk for a 26" 1612# JMMNTY

*MATERIAL MEETS 1974 EDITION SECTION II

8. Nom. thickness (in.) N/A Min. design thickness (in.) Per #4 Dia. ID (ft & in.) N/A Length overall (ft & in.) N/A
9. When applicable, Certificate Holders' Data Reports are attached for each item of this report:

Part or Appurtenance Serial Number	National Board No. In Numerical Order	Part or Appurtenance Serial Number	National Board No. In Numerical Order
(1) 91219-1	N/A	(26)	
(2) 91219-2	N/A	(27)	
(3)		(28)	
(4)		(29)	
(5)		(30)	
(6)		(31)	
(7) MS-V-22D, S/N 91219-1		(32)	
(8)		(33)	
(9)		(34)	
(10)		(35)	
(11)		(36)	
(12)		(37)	
(13)		(38)	
(14)		(39)	
(15)		(40)	
(16)		(41)	
(17)		(42)	
(18)		(43)	
(19)		(44)	
(20)		(45)	
(21)		(46)	
(22)		(47)	
(23)		(48)	
(24)		(49)	
(25)		(50)	

10. Design pressure 1250 psi. Temp. 575 °F. Hydro. test pressure — (when applicable) at temp. °F

* Supplemental information in the form of lists, sketches, or drawings may be used provided (1) size is 8½ x 11, (2) information in Items 2 and 3 on this Data Report is included on each sheet, (3) each sheet is numbered and the number of sheets is recorded at the top of this form.

(11/05)

FORM N-2 (Back — Pg. 2 of 2)

Certificate Holder's Serial Nos. 91219-1 through 91219-2

CERTIFICATION OF DESIGN

Design specifications certified by B. BROOKS (when applicable) P.E. State CA Reg. no. 13655

Design report* certified by N/A (when applicable) P.E. State N/A Reg. no. N/A

CERTIFICATE OF COMPLIANCE

We certify that the statements made in this report are correct and that this (these) Parts conforms to the rules of construction of the ASME Code, Section III, Division 1.

NPT Certificate of Authorization No. N-1563 Expires 11-26-09

Date 5/21/07 Name Flowserve Corporation (NPT Certificate Holder) Signed (authorized representative)

CERTIFICATE OF INSPECTION

I, the undersigned, holding a valid commission issued by the National Board of Boiler and Pressure Vessel Inspectors and the State or Province of NC and employed by HSB CT of Hartford, CT have inspected these items described in this Data Report on 5/21/07, and state that to the best of my knowledge and belief, the Certificate Holder has fabricated these parts or appurtenances in accordance with the ASME Code, Section III, Division 1. Each part listed has been authorized for stamping on the date shown above.

By signing this certificate, neither the inspector nor his employer makes any warranty, expressed or implied, concerning the equipment described in this Data Report. Furthermore, neither the inspector nor his employer shall be liable in any manner for any personal injury or property damage or loss of any kind arising from or connected with this inspection.

Date 5/21/07 Signed (Authorized Nuclear Inspector) Commissions NC #1421 (Nat'l. Bd. (incl. endorsements) and state or prov. and no.)

PLAN NO. 2-2196

Rudolph Bright 7/13/09.

FORM N-2 CERTIFICATE HOLDERS' DATA REPORT FOR IDENTICAL NUCLEAR PARTS AND APPURTENANCES*

As Required by the Provisions of the ASME Code, Section III
Not to Exceed One Day's Production

1. Manufactured and certified by Flowserve Corporation, 1900 S. Saunders St., Raleigh, NC 27603 (name and address of NPT Certificate Holder)
2. Manufactured for Energy Northwest, P. O. Box 968, Richland, WA 99352 (name and address of purchaser)
3. Location of installation Energy Northwest, Columbia Generating Station, N. Powerplant Loop, Richland, WA (name and address)
4. Type PD-422885, R/E* (drawing no.) SA105 (mat'l. spec. no.) N/A (tensile strength) N/A (CRN) 2006 (year built)
5. ASME Code, Section III, Division 1: 1971 (edition) Winter, 1971 (addenda date) 1 (class) N/A (Code Case no.)
6. Fabricated in accordance with Const. Spec. (Div. 2 only) N/A (no.) Revision N/A Date N/A
7. Remarks: Disk-Piston assembly for 26" 1612JMMNTY Valve
   Disk material meets ASME Section II, 1974 Edition
   * Sheet 3B. Sheet 1, R/V S. O. 39120
8. Nom. thickness (in.) N/A Min. design thickness (in.) Per #4 Dia. ID (ft & in.) N/A Length overall (ft & in.) N/A
9. When applicable, Certificate Holders' Data Reports are attached for each item of this report:

Part or Appurtenance Serial Number	National Board No. in Numerical Order	Part or Appurtenance Serial Number	National Board No. in Numerical Order
(1) 89220-1	N/A	(26)	
(2) 89220-2	N/A	(27)	
(3)		(28)	
(4)		(29)	
(5)		(30)	
(6) MS-V-22B, S/N		(31)	
(7)		(32)	
(8) 89220-1		(33)	
(9)		(34)	
(10)		(35)	
(11)		(36)	
(12)		(37)	
(13)		(38)	
(14)		(39)	
(15)		(40)	
(16)		(41)	
(17)		(42)	
(18)		(43)	
(19)		(44)	
(20)		(45)	
(21)		(46)	
(22)		(47)	
(23)		(48)	
(24)		(49)	
(25)		(50)	

10. Design pressure 1250 psi. Temp. 575 °F. Hydro. test pressure N/A (when applicable) at temp. °F

* Supplemental information in the form of lists, sketches, or drawings may be used provided (1) size is 8½ x 11, (2) information in items 2 and 3 on this Data Report is included on each sheet, (3) each sheet is numbered and the number of sheets is recorded at the top of this form.

This form (E00040) may be obtained from the Order Dept., ASME, 22 Law Drive, Box 2300, Fairfield, NJ 07007-2300.

Certificate Holder's Serial Nos. 89220-1 through 89220-2

CERTIFICATION OF DESIGN

Design specifications certified by Boyd Brooks (when applicable) P.E. State CA Reg. no. 13655

Design report* certified by S. L. Adams (when applicable) P.E. State NC Reg. no. 4187

CERTIFICATE OF COMPLIANCE

We certify that the statements made in this report are correct and that this (these) Part(s) conforms to the rules of construction of the ASME Code, Section III, Division 1.

NPT Certificate of Authorization No. N-1563 Expires November 26, 2006

Date 8/28/06 Name Flowserve Corporation (NPT Certificate Holder) Signed (authorized representative)

CERTIFICATE OF INSPECTION

I, the undersigned, holding a valid commission issued by the National Board of Boiler and Pressure Vessel Inspectors and the State or Province of NC and employed by HSB CT of Hartford, CT have inspected these items described in this Data Report on 8/28/06, and state that to the best of my knowledge and belief, the Certificate Holder has fabricated these parts or appurtenances in accordance with the ASME Code, Section III, Division 1. Each part listed has been authorized for stamping on the date shown above.

By signing this certificate, neither the inspector nor his employer makes any warranty, expressed or implied, concerning the equipment described in this Data Report. Furthermore, neither the inspector nor his employer shall be liable in any manner for any personal injury or property damage or loss of any kind arising from or connected with this inspection.

Date 8/28/06 Signed (Authorized Nuclear Inspector) Commissions NC#1421 (Nat'l. Bd. (incl. endorsements) and state or prov. and no.)

PLAN No 2-2197

ENERGY NORTHWEST
People · Vision · Solutions

FORM NIS-2 OWNER'S REPORT FOR REPAIR/REPLACEMENT ACTIVITY
As Required By The Provisions Of The ASME Code Section XI

Date: 07/13/2009
Sheet: 1 Of 1
Unit: Not Applicable

1. Owner: Energy Northwest
Address: Columbia Generating Station, North Power Plant Loop, Richland, Washington, 99352
2. Plant: Columbia Generating Station
Address: Columbia Generating Station, North Power Plant Loop, Richland, Washington, 99352
3. (a) Work Performed By: Energy Northwest
(b) Repair/Replacement Organization P.O. No, Job No, etc.: Energy Northwest
(c) Type Code Symbol Stamp: Not Applicable
(d) Certificate Of Authorization No.: Not Applicable
(e) Expiration Date: Not Applicable
4. Identification Of System: main Steam (MS) System
5. (a) Applicable Construction Code: ASME Section III, Code Class 1, 1971 Edition with Winter 1971 Addenda, Code Case: Note 1
(b) Applicable Edition Of ASME Section XI Used For Repair/Replacement Activity: 2001 Edition with 2003 Addenda
(c) Applicable ASME Section XI Case(s): None
6. Identification Of Components

Name Of Component	Name Of Manufacturer	Manufacturer's Serial No	National Board No	Other I.D.	Year Built	Corrected, Removed Or Installed	ASME Code Stamped (Yes Or No) Code Class
MS-V-22D	Rockwell	JT-41	68	N/A	1973	See Item 7 Below	Yes, Code Class 1
Pilot Disc	Flowserve	6033641-153	N/A	N/A	1989	Removed	Yes, Code Class 1
Pilot Disc	Flowserve	91219-1	N/A	N/A	2007	Installed	Yes, Code Class 1
Main Disc	Flowserve	6053657-155	N/A	N/A	1989	Removed	Yes, Code Class 1
Main disc	Flowserve	89220-1	N/A	N/A	2006	Installed	Yes, Code Class 1

7. Description Of Work Performed: Replaced existing parts for valve MS-V-22D, Serial No JT-41. The replacement work was performed as follows:

1) Removed existing pilot disc (stem disc) Serial No 6033641-153 from the valve.
2) Removed existing main disc (piston disc) Serial No 6053657-155 from the valve.
3) Performed VT-1 visual examination on replacement studs for the valve body to bonnet joint for ISI (PSI). VT-1 visual examination results acceptable.
4) Performed VT-1 visual examination on replacement nuts for the valve body to bonnet joint for ISI (PSI). VT-1 visual examination results acceptable.
5) Installed replacement pilot disc (stem disc) Serial No 91219-1 in the valve.
6) Installed replacement main disc (piston disc) Serial No 89220-1 in the valve.
7) Installed two (2) VT-1 visually examined replacement studs for the valve body to bonnet joint.
8) Installed two (2) VT-1 visually examined replacement nuts for the valve body to bonnet joint.
9) Reinstalled the remaining twenty two (22) studs and twenty two (22) nuts for the valve body to bonnet joint.
10) Performed VT-2 visual examination during pressure test to confirm pressure boundary integrity of the valve body to bonnet bolted joint. No evidence of leakage during the pressure test.

NOTES -

1) The applicable ASME Code Cases, if any are listed on the ASME Code Data Reports.
2) The ASME Section XI plans applicable to valve MS-V-22D are as follows:
   ASME Section XI Plan No 2-2196 - Assembled pilot disc (stem disc) and main disc (piston disc) for valve MS-V-22D.
   ASME Section XI Plan No 2-2197 - Replaced parts for valve MS-V-22D.
3) OEM/OES Rockwell International/Edward Valves, Inc parts are now being manufactured by OEM/OES Flowserve.

PLAN No 2-2197

ENERGY NORTHWEST
People·Vision·Solutions

FORM NIS-2 OWNER'S REPORT FOR REPAIR/REPLACEMENT ACTIVITY (Back)

8 Tests Conducted: Hydrostatic ☐ **Pneumatic** ☐ **Nominal Operating Pressure** ☐ **Other** ☐ *
Exempt ☐ **Test Pressure:** 1020 Psig **Test Temperature:** 165° F

9. Remarks (Applicable Manufacturer's Data Reports to be attached): 1) See attached N-2 Code Data Reports for the following replacement parts:

Part Description	Serial No
Pilot disc (stem disc)	91219-1
Main disc (piston disc)	89220-1

2) * The test pressure and the test temperature on the relief valve inlet joint was recorded during ASME Section XI pressure test which was performed in accordance with PPM No OSP-RPV-R801 "Reactor Pressure Vessel Leakage Test".

CERTIFICATE OF COMPLIANCE

I certify that the statements made in this Owner's Report are correct and that this conforms to the requirements of the ASME Code, Section XI.
Type Code Symbol Stamp: Not Applicable
Certificate Of Authorization No.: Not Applicable
Expiration Date: Not Applicable

Prepared By Kuldip Singh - Program Lead Engineer (PLE) ***Signed By*** Kuldip Singh - Program Lead Engineer (PLE)

Date 7/13/09 ***Date*** 7/13/09.

CERTIFICATE OF INSERVICE INSPECTION

I, the undersigned, holding a valid commission issued by the National Board of Boiler and Pressure Vessel Inspectors and the State of Washington ***and employed by*** Hartford Steam Boiler Of Connecticut of Hartford, Connecticut ***have inspected the components described in this Owner's Report during the period*** 7/11/2009 ***to*** 7/15/2009 ***and state to the best of my knowledge and belief, the Owner has performed examinations and taken corrective measures described in this Owner's Report in accordance with the requirements of the ASME Code, Section XI.***
By signing this certificate neither the Inspector nor his employer makes any warranty, expressed or implied, concerning the examinations and corrective measures described in this Owner's Report. Furthermore, neither the Inspector nor his employer shall be liable in any manner for any personal injury or property damage or a loss of any kind arising from or connected with this inspection.

Inspector's Signature ***Commissions*** 13172 WANI
National Board, State, and Endorsements

Date 7/15/2009

PLAN No. 2-2197

FORM N-2 CERTIFICATE HOLDERS' DATA REPORT FOR IDENTICAL NUCLEAR PARTS AND APPURTENANCES*

As Required by the Provisions of the ASME Code, Section III

Not to Exceed One Day's Production

Philip Sims 2/13/09

1. Manufactured and certified by Flowserve Corporation 1900 S. Saunders St. Raleigh, NC 27603 (name and address of NPT Certificate Holder)
2. Manufactured for Energy Northwest/Accts Payable/ P.O. Box 968 Richland, WA 99352-0968 (name and address of purchaser)
3. Location of installation Energy Northwest/ Columbia Generating Station/Richland, WA 99352 (name and address)
4. Type PD-422885 R/F sht 3B of 10 (drawing no.) ASME SA105 (mat'l. spec. no.) N/A (tensile strength) N/A (CRN) 2007 (year built)
5. ASME Code, Section III, Division 1: * 1971 (edition) Winter 1971 (addenda date) 1 (class) N/A (Code Case no.)
6. Fabricated in accordance with Const. Spec. (Div. 2 only) N/A (no.) Revision N/A Date N/A
7. Remarks: Stem-disk for a 26" 1612# JMMNTY

*MATERIAL MEETS 1974 EDITION SECTION II

8. Nom. thickness (in.) N/A Min. design thickness (in.) Per #4 Dia. ID (ft & in.) N/A Length overall (ft & in.) N/A
9. When applicable, Certificate Holders' Data Reports are attached for each item of this report:

Part or Appurtenance Serial Number	National Board No. in Numerical Order	Part or Appurtenance Serial Number	National Board No. in Numerical Order
(1) 91219-1	N/A	(26)	
(2) 91219-2	N/A	(27)	
(3)		(28)	
(4)		(29)	
(5)		(30)	
(6) MS-V-22D, S/N 91219-1		(31)	
(7)		(32)	
(8)		(33)	
(9)		(34)	
(10)		(35)	
(11)		(36)	
(12)		(37)	
(13)		(38)	
(14)		(39)	
(15)		(40)	
(16)		(41)	
(17)		(42)	
(18)		(43)	
(19)		(44)	
(20)		(45)	
(21)		(46)	
(22)		(47)	
(23)		(48)	
(24)		(49)	
(25)		(50)	

10. Design pressure 1250 psi. Temp. 575 °F. Hydro. test pressure ——— (when applicable) at temp. °F

* Supplemental information in the form of lists, sketches, or drawings may be used provided (1) size is 8½ x 11, (2) information in items 2 and 3 on this Data Report is included on each sheet, (3) each sheet is numbered and the number of sheets is recorded at the top of this form.

(11/05)

FORM N-2 (Back — Pg. 2 of 2)

Certificate Holder's Serial Nos. 91219-1 through 91219-2

CERTIFICATION OF DESIGN

Design specifications certified by B. BROOKS (when applicable) P.E. State CA Reg. no. 13655

Design report* certified by N/A (when applicable) P.E. State N/A Reg. no. N/A

CERTIFICATE OF COMPLIANCE

We certify that the statements made in this report are correct and that this (these) Parts conforms to the rules of construction of the ASME Code, Section III, Division 1.

NPT Certificate of Authorization No. N-1563 Expires 11-26-09

Date 5/21/07 Name Flowserve Corporation (NPT Certificate Holder) Signed (authorized representative)

CERTIFICATE OF INSPECTION

I, the undersigned, holding a valid commission issued by the National Board of Boiler and Pressure Vessel Inspectors and the State or Province of NC and employed by HSB CT of Hartford, CT have inspected these items described in this Data Report on 5/21/07, and state that to the best of my knowledge and belief, the Certificate Holder has fabricated these parts or appurtenances in accordance with the ASME Code, Section III, Division 1. Each part listed has been authorized for stamping on the date shown above.

By signing this certificate, neither the inspector nor his employer makes any warranty, expressed or implied, concerning the equipment described in this Data Report. Furthermore, neither the inspector nor his employer shall be liable in any manner for any personal injury or property damage or loss of any kind arising from or connected with this inspection.

Date 5/21/07 Signed (Authorized Nuclear Inspector) Commissions NC#1421 (Nat'l. Bd. (incl. endorsements) and state or prov. and no.)

PLAN NO. 2-2197

Philip Sayers 7/13/09.

FORM N-2 CERTIFICATE HOLDERS' DATA REPORT FOR IDENTICAL NUCLEAR PARTS AND APPURTENANCES*

As Required by the Provisions of the ASME Code, Section III
Not to Exceed One Day's Production

1. Manufactured and certified by Flowserve Corporation, 1900 S. Saunders St., Raleigh, NC 27603 (name and address of NPT Certificate Holder)
2. Manufactured for Energy Northwest, P. O. Box 968, Richland, WA 99352 (name and address of purchaser)
3. Location of installation Energy Northwest, Columbia Generating Station, N. Powerplant Loop, Richland, WA (name and address)
4. Type PD-422885, R/E* (drawing no.) SA105 (mat'l. spec. no.) N/A (tensile strength) N/A (CRN) 2006 (year built)
5. ASME Code, Section III, Division 1: 1971 (edition) Winter, 1971 (addenda date) 1 (class) N/A (Code Case no.)
6. Fabricated in accordance with Const. Spec. (Div. 2 only) N/A (no.) Revision N/A Date N/A
7. Remarks: Disk-Piston assembly for 26" 1612JMMNTY Valve
   Disk material meets ASME Section II, 1974 Edition
   * Sheet 3B. Sheet 1, R/V S. O. 39120
8. Nom. thickness (in.) N/A Min. design thickness (in.) Per #4 Dia. ID (ft & in.) N/A Length overall (ft & in.) N/A
9. When applicable, Certificate Holders' Data Reports are attached for each item of this report:

Part or Appurtenance Serial Number	National Board No. in Numerical Order	Part or Appurtenance Serial Number	National Board No. in Numerical Order
(1) 89220-1	N/A	(26)	
(2) 89220-2	N/A	(27)	
(3)		(28)	
(4)		(29)	
(5)		(30)	
(6) MS-V-22D, S/N 89220-1		(31)	
(7)		(32)	
(8)		(33)	
(9)		(34)	
(10)		(35)	
(11)		(36)	
(12)		(37)	
(13)		(38)	
(14)		(39)	
(15)		(40)	
(16)		(41)	
(17)		(42)	
(18)		(43)	
(19)		(44)	
(20)		(45)	
(21)		(46)	
(22)		(47)	
(23)		(48)	
(24)		(49)	
(25)		(50)	

10. Design pressure 1250 psi. Temp. 575 °F. Hydro. test pressure N/A (when applicable) at temp. °F

* Supplemental information in the form of lists, sketches, or drawings may be used provided (1) size is 8½ x 11, (2) information in items 2 and 3 on this Data Report is included on each sheet, (3) each sheet is numbered and the number of sheets is recorded at the top of this form.

This form (E00040) may be obtained from the Order Dept., ASME, 22 Law Drive, Box 2300, Fairfield, NJ 07007-2300.

Certificate Holder's Serial Nos. 89220-1 through 89220-2

CERTIFICATION OF DESIGN

Design specifications certified by Boyd Brooks (when applicable) P.E. State CA Reg. no. 13655

Design report* certified by S. L. Adams (when applicable) P.E. State NC Reg. no. 4187

CERTIFICATE OF COMPLIANCE

We certify that the statements made in this report are correct and that this (these) Part(s) conforms to the rules of construction of the ASME Code, Section III, Division 1.

NPT Certificate of Authorization No. N-1563 Expires November 26, 2006

Date 8/28/06 Name Flowserve Corporation (NPT Certificate Holder) Signed [signature] (authorized representative)

CERTIFICATE OF INSPECTION

I, the undersigned, holding a valid commission issued by the National Board of Boiler and Pressure Vessel Inspectors and the State or Province of NC and employed by HSB CT of Hartford, CT have inspected these items described in this Data Report on 8/28/06, and state that to the best of my knowledge and belief, the Certificate Holder has fabricated these parts or appurtenances in accordance with the ASME Code, Section III, Division 1. Each part listed has been authorized for stamping on the date shown above.

By signing this certificate, neither the inspector nor his employer makes any warranty, expressed or implied, concerning the equipment described in this Data Report. Furthermore, neither the inspector nor his employer shall be liable in any manner for any personal injury or property damage or loss of any kind arising from or connected with this inspection.

Date 8/28/06 Signed [signature] (Authorized Nuclear Inspector) Commissions NC #1421 (Nat'l. Bd. (incl. endorsements) and state or prov. and no.)

PLAN No 2-2210

ENERGY NORTHWEST
People · Vision · Solutions

FORM NIS-2 OWNER'S REPORT FOR REPAIR/REPLACEMENT ACTIVITY
As Required By The Provisions Of The ASME Code Section XI

1. Owner: Energy Northwest
Address: Columbia Generating Station, North Power Plant Loop, Richland, Washington, 99352
2. Plant: Columbia Generating Station
Address: Columbia Generating Station, North Power Plant Loop, Richland, Washington, 99352

Date: 07/13/2009
Sheet: 1 Of 1
Unit: Not Applicable

3. (a) Work Performed By: Energy Northwest
(b) Repair/Replacement Organization P.O. No, Job No, etc.: Energy Northwest
(c) Type Code Symbol Stamp: Not Applicable
(d) Certificate Of Authorization No.: Not Applicable
(e) Expiration Date: Not Applicable
4. Identification Of System: Reactor Core Isolation Cooling (RCIC) System
5. (a) Applicable Construction Code: ASME Section III, Code Class 1, 1971 Edition with Winter 1973 Addenda, Code Case: Note 1
(b) Applicable Edition Of ASME Section XI Used For Repair/Replacement Activity: 2001 Edition with 2003 Addenda
(c) Applicable ASME Section XI Case(s): None
6. Identification Of Components

Name Of Component	Name Of Manufacturer	Manufacturer's Serial No	National Board No	Other I.D.	Year Built	Corrected, Removed Or Installed	ASME Code Stamped (Yes Or No) Code Class
RCIC(1)-4CL1	WPPSS*	RCIC(1)-4CL1-P1	N/A	N/A	1983	See Item 7 Below	Yes, Code Class 1

7. Description Of Work Performed: Replaced bolting material for the RPV head nozzle N-7 flanged joint. The replacement work was performed as follows:

1) Removed existing studs from the flanged joint.
2) Remove existing nuts from the flanged joint.
3) Performed VT-1 visual examination on replacement studs for ISI (PSI) for the flanged joint. VT-1 visual examination results acceptable.
4) Performed VT-1 visual examination on replacement nuts for ISI (PSI) for the flanged joint. VT-1 visual examination results acceptable.
5) Installed twelve (12) VT-1 visually examined replacement studs for the flanged joint.
6) Installed twenty four (24) VT-1 visually examined replacement nuts for the flanged joint.
7) Performed VT-2 visual examination during pressure test to confirm pressure boundary integrity of the flanged joint. No evidence of leakage during the pressure test.

NOTES

1) The applicable ASME Code Cases, if any are listed on the ASME Code Data Reports.
2) * Company name changed from Washington Public Power Supply System (WPPSS) to Energy Northwest (EN) in 1999.

PLAN No 2-2210

ENERGY NORTHWEST
People · Vision · Solutions

FORM NIS-2 OWNER'S REPORT FOR REPAIR/REPLACEMENT ACTIVITY (Back)

8 Tests Conducted: Hydrostatic [ ] **Pneumatic** [ ] **Nominal Operating Pressure** [ ] **Other** [*]
Exempt [ ] **Test Pressure:** 1020 Psig **Test Temperature:** 165° F

9. Remarks (Applicable Manufacturer's Data Reports to be attached): 1) * The test pressure and the test temperature on the relief valve inlet joint was recorded during ASME Section XI pressure test which was performed in accordance with PPM No OSP-RPV-R801 "Reactor Pressure Vessel Leakage Test".

CERTIFICATE OF COMPLIANCE

I certify that the statements made in this Owner's Report are correct and that this conforms to the requirements of the ASME Code, Section XI.
Type Code Symbol Stamp: Not Applicable
Certificate Of Authorization No.: Not Applicable
Expiration Date: Not Applicable

Prepared By Kuldip Singh - Program Lead Engineer (PLE) ***Signed By*** Kuldip Singh - Program Lead Engineer (PLE)

Date 7/13/09 ***Date*** 7/13/09.

CERTIFICATE OF INSERVICE INSPECTION

I, the undersigned, holding a valid commission issued by the National Board of Boiler and Pressure Vessel Inspectors and the State of Washington ***and employed by*** Hartford Steam Boiler Of Connecticut of Hartford, Connecticut ***have inspected the components described in this Owner's Report during the period*** 5/18/2009 ***to*** 7/16/2009 ***and state to the best of my knowledge and belief, the Owner has performed examinations and taken corrective measures described in this Owner's Report in accordance with the requirements of the ASME Code, Section XI.***
By signing this certificate neither the Inspector nor his employer makes any warranty, expressed or implied, concerning the examinations and corrective measures described in this Owner's Report. Furthermore, neither the Inspector nor his employer shall be liable in any manner for any personal injury or property damage or a loss of any kind arising from or connected with this inspection.

Inspector's Signature ***Commissions*** 13172 WANI
National Board, State, and Endorsements

Date 7/16/2009

PLAN No 2-2212

ENERGY NORTHWEST
People · Vision · Solutions

FORM NIS-2 OWNER'S REPORT FOR REPAIR/REPLACEMENT ACTIVITY
As Required By The Provisions Of The ASME Code Section XI

1. Owner: Energy Northwest
Address: Columbia Generating Station, North Power Plant Loop, Richland, Washington, 99352
2. Plant: Columbia Generating Station
Address: Columbia Generating Station, North Power Plant Loop, Richland, Washington, 99352

Date: 07/29/2009
Sheet: 1 Of 1
Unit: Not Applicable

3. (a) Work Performed By: Energy Northwest
(b) Repair/Replacement Organization P.O. No, Job No, etc.: Energy Northwest
(c) Type Code Symbol Stamp: Not Applicable
(d) Certificate Of Authorization No.: Not Applicable
(e) Expiration Date: Not Applicable
4. Identification Of System: High Pressure Core Spray (HPCS) System
5. (a) Applicable Construction Code: ASME Section III, Code Class 2, 1971 Edition with Summer 1971 Addenda, Code Case: Note 1
(b) Applicable Edition Of ASME Section XI Used For Repair/Replacement Activity: 2001 Edition with 2003 Addenda
(c) Applicable ASME Section XI Case(s): None
6. Identification Of Components

Name Of Component	Name Of Manufacturer	Manufacturer's Serial No	National Board No	Other I.D.	Year Built	Corrected, Removed Or Installed	ASME Code Stamped (Yes Or No) Code Class
HPCS-V-10	Anchor Darling	2N-239	N/A	N/A	1974	See Item 7 Below	Yes, Code Class 2

7. Description Of Work Performed: Machined valve body seat ring surfaces for valve HPCS-V-10. The work was performed as follows:

1) Machined valve body seat ring surfaces.
2) Performed liquid penetrant (PT) examination on the final top face of the valve body seat ring machined surfaces. Liquid penetrant (PT) examination results were found to be unacceptable. The unacceptable liquid penetrant (PT) examination was in the surfaces of the seat ring which is considered as non-functional surface (not associated with pressure retaining function of the component).
3) Performed VT-2 visual examination during pressure test to confirm pressure boundary integrity of the joint. No evidence of leakage during the pressure test.

NOTES

1) The applicable ASME Code Cases, if any are listed on the ASME Code Data Reports.

PLAN No 2-2212

ENERGY NORTHWEST
People · Vision · Solutions

FORM NIS-2 OWNER'S REPORT FOR REPAIR/REPLACEMENT ACTIVITY (Back)

8 Tests Conducted: Hydrostatic [ ] **Pneumatic** [ ] **Nominal Operating Pressure** [X] **Other** [ ]
Exempt [ ] **Test Pressure:** 500 Psig **Test Temperature:** 100° F

9. Remarks (Applicable Manufacturer's Data Reports to be attached): 1) Pressure test and VT-2 visual examination during pressure test to confirm pressure boundary integrity of the valve HPCS-V-10 body to bonnet joint was performed under ASME Section XI Plan No 2-2256. Pressure test and VT-2 visual examination during pressure test performed under ASME Section XI Plan No 2-2256 for valve HPCS-V-10 body to bonnet joint satisfies the pressure test requirements for ASME Section XI Plan No 2-2212 for valve HPCS-V-10 body to bonnet joint.

CERTIFICATE OF COMPLIANCE

I certify that the statements made in this Owner's Report are correct and that this conforms to the requirements of the ASME Code, Section XI.
Type Code Symbol Stamp: Not Applicable
Certificate Of Authorization No.: Not Applicable
Expiration Date: Not Applicable

Prepared By Kuldip Singh - Program Lead Engineer (PLE) **Signed By** Kuldip Singh - Program Lead Engineer (PLE)

Date 7/29/09 **Date** 7/29/09

CERTIFICATE OF INSERVICE INSPECTION

I, the undersigned, holding a valid commission issued by the National Board of Boiler and Pressure Vessel Inspectors and the State of Washington ***and employed by*** Hartford Steam Boiler Of Connecticut of Hartford, Connecticut ***have inspected the components described in this Owner's Report during the period*** 5-4-2009 ***to*** 7-30-2009 ***and state to the best of my knowledge and belief, the Owner has performed examinations and taken corrective measures described in this Owner's Report in accordance with the requirements of the ASME Code, Section XI.***
By signing this certificate neither the Inspector nor his employer makes any warranty, expressed or implied, concerning the examinations and corrective measures described in this Owner's Report. Furthermore, neither the Inspector nor his employer shall be liable in any manner for any personal injury or property damage or a loss of any kind arising from or connected with this inspection.

Frank A Allgaier
Inspector's Signature

Commissions 13324 WA NI
National Board, State, and Endorsements

Date 7-30-2009

FORM NIS-2 OWNER'S REPORT FOR REPAIR/REPLACEMENT ACTIVITY

As Required by the Provisions of the ASME Code Section XI

1. **Owner:** Energy Northwest
   Address P.O. Box 968
   Richland, WA 99352

   Date: 7/23/09

   Sheet: 1 of 1

2. **Plant:** Columbia Generating Station
   Address 76 North Power Plant Loop
   Richland, WA 99354

   Unit: 2

   Repair/Replacement Organization Work Order No. 01170774
   Work Plan No. 2-2213

3. **Work Performed by:** Energy Northwest
   Address: 76 North Power Plant Loop
   Richland, WA 99354

   Type Code Symbol Stamp: Not Applicable
   Authorization No. Not Applicable
   Expiration Date: Not Applicable

4. **Identification of System:** Residual Heat Removal (RHR)

5. (a) **Applicable Construction Code:** ASME Section III **Edition:** 1971 **Addenda:** W72 **Code Case:** N/A

   (b) **Applicable Edition of Section XI Used for Repair/Replacement Activity:** 2001 **Addenda:** 2003

   (c) **Applicable Section XI Code Case(s):** N/A

6. **Identification of Components:**

Name of Component	*Name of Manufacturer*	*Manufacturer Serial No.*	*NB No.*	*Other No.*	*Year Built*	*Corrected, Removed, or Installed*	*ASME Code Stamped (Yes or No)*
Valve: RHR-V-50A	Velan	0415	N/A	N/A	1977	Corrected	Yes

7. **Description of Work:**

Two (2) new 3/16" diameter Dowel Pin holes were drilled (machined) into Valve RHR-V-50A's internal valve body seat ring boss to facilitate proper alignment of its existing internal fixed Hanger Block. The holes were drilled to a depth of 7/32." Following the mechanical work, a System Leakage Test and VT-2 Visual Examination were successfully performed.

References: ASME Section XI Work Plan Number 2-2246; EC-FCR Numbers 8144 and 8153

8. **Test Conducted:** **Hydrostatic** ☒ **Pneumatic** ☒ **Nominal Operating Pressure** ☐ **Exempt** ☒

   Other ☑ **Pressure (psi):** 1020 **Test Temperature (°F):** 165

FORM NIS-2 OWNER'S REPORT FOR REPAIR/REPLACEMENT ACTIVITY

As Required by the Provisions of the ASME Code Section XI

FORM NIS-2 (Back)

9. **Remarks:**

CERTIFICATE OF COMPLIANCE

I certify that the statements made in the report are correct and that this conforms to the requirements of the ASME Code, Section XI.

Type Code Symbol Stamp: Not Applicable
Certificate of Authorization No.: Not Applicable
Expiration Date: Not Applicable

Signed: PLE
Owner or Owner's Designee, Title

Date: 7/23/09

CERTIFICATE OF INSERVICE INSPECTION

I, the undersigned, holding a valid commission issued by the National Board of Boiler and Pressure Vessel Inspectors and the State or Province of Washington and employed by Hartford Steam Boiler of Connecticut of Hartford, Connecticut have inspected the components described in this Owner's Report during the period 5-4-09 to 8-17-09, and state that to the best of my knowledge and belief, the Owner has performed examinations and taken corrective measures described in this Owner's Report in accordance with the requirements of the ASME Code, Section XI.

By signing this certificate neither the inspector nor his employer makes any warranty, expressed or implied, concerning the examinations and corrective measures described in this Owner's Report. Furthermore, neither the inspector nor his employer shall be liable in any manner for any personal injury or property damage or a loss of any kind arising from or connected with this inspection.

Frank A. Allgaier
Inspector's Signature

Commissions: 13324 W ANI
National Board, State, Province, and Endorsements

Date: 8-17-09

FORM NIS-2 OWNER'S REPORT FOR REPAIR/REPLACEMENT ACTIVITY

As Required by the Provisions of the ASME Code Section XI

1. **Owner:** Energy Northwest
   Address P.O. Box 968
   Richland, WA 99352

   Date: 7/20/09

   Sheet: 1 of 1

2. **Plant:** Columbia Generating Station
   Address 76 North Power Plant Loop
   Richland, WA 99354

   Unit: 2

   Repair/Replacement Organization Work Order No. 01141483
   Work Plan No. 2-2214

3. **Work Performed by:** Energy Northwest
   Address: 76 North Power Plant Loop
   Richland, WA 99354

   Type Code Symbol Stamp: Not Applicable
   Authorization No. Not Applicable
   Expiration Date: Not Applicable

4. **Identification of System:** Main Steam (MS)

5. (a) **Applicable Construction Code:** ASME Section III **Edition:** 1971 **Addenda:** W71 **Code Case:** N/A

   (b) **Applicable Edition of Section XI Used for Repair/Replacement Activity:** 2001 **Addenda:** 2003

   (c) **Applicable Section XI Code Case(s):** N/A

6. **Identification of Components:**

Name of Component	*Name of Manufacturer*	*Manufacturer Serial No.*	*NB No.*	*Other No.*	*Year Built*	*Corrected, Removed, or Installed*	*ASME Code Stamped (Yes or No)*
Valve: MS-V-22D	Rockwell	JT-41	68	N/A	1973	Corrected	Yes

7. **Description of Work:**

Main Steam Isolation Valve MS-V-22D's main valve body hardfaced seating surface was mechanically machined 0.003." Following the machining, NDE (PT Examination) was successfully performed. A System Leakage Test and VT-2 Visual Examination were successfully performed.

References: PT Examination Report No. 5-09-7-68; VT-2 Visual Examination Data Sheet for ASME Section XI Work Plan No. 2-2197

8. **Test Conducted:** **Hydrostatic** ☐ **Pneumatic** ☒ **Nominal Operating Pressure** ☒ **Exempt** ☒

   Other ☑ **Pressure (psi):** 1020 **Test Temperature (°F):** 165

FORM NIS-2 OWNER'S REPORT FOR REPAIR/REPLACEMENT ACTIVITY

As Required by the Provisions of the ASME Code Section XI

FORM NIS-2 (Back)

9. **Remarks:**

The System Leakage Test was performed during the OSP-RPV-R801 Reactor Pressure Vessel Leakage Test during Refueling Outage R-19 via ASME Section XI Work Plan No. 2-2197.

CERTIFICATE OF COMPLIANCE

I certify that the statements made in the report are correct and that this conforms to the requirements of the ASME Code, Section XI.

Type Code Symbol Stamp: Not Applicable

Certificate of Authorization No.: Not Applicable

Expiration Date: Not Applicable

Signed: [signature] PLE

Owner or Owner's Designee, Title

Date: 7/20/09

CERTIFICATE OF INSERVICE INSPECTION

I, the undersigned, holding a valid commission issued by the National Board of Boiler and Pressure Vessel Inspectors and the State or Province of Washington and employed by Hartford Steam Boiler of Connecticut of Hartford, Connecticut have inspected the components described in this Owner's Report during the period 5-4-09 to 8-14-09, and state that to the best of my knowledge and belief, the Owner has performed examinations and taken corrective measures described in this Owner's Report in accordance with the requirements of the ASME Code, Section XI.

By signing this certificate neither the Inspector nor his employer makes any warranty, expressed or implied, concerning the examinations and corrective measures described in this Owner's Report. Furthermore, neither the Inspector nor his employer shall be liable in any manner for any personal injury or property damage or a loss of any kind arising from or connected with this inspection.

Frank A Allgaier

Inspector's Signature

Commissions: 13324 W A NI

National Board, State, Province, and Endorsements

Date: 8-14-2009

FORM NIS-2 OWNER'S REPORT FOR REPAIR/REPLACEMENT ACTIVITY

As Required by the Provisions of the ASME Code Section XI

1. **Owner:** Energy Northwest
   Address P.O. Box 968
   Richland, WA 99352

   Date: 6/18/09

   Sheet: 1 of 1

2. **Plant:** Columbia Generating Station
   Address 76 North Power Plant Loop
   Richland, WA 99354

   Unit: 2

   Repair/Replacement Organization Work Order No. 01171263
   Work Plan No. 2-2216

3. **Work Performed by:** Energy Northwest
   Address: 76 North Power Plant Loop
   Richland, WA 99354

   Type Code Symbol Stamp: Not Applicable
   Authorization No. Not Applicable
   Expiration Date: Not Applicable

4. **Identification of System:** Main Steam (MS)

5. (a) **Applicable Construction Code:** ASME Section III **Edition:** 1971 **Addenda:** W73 **Code Case:** (see Data Report)
   (b) **Applicable Edition of Section XI Used for Repair/Replacement Activity:** 2001 **Addenda:** 2003
   (c) **Applicable Section XI Code Case(s):** N/A

6. **Identification of Components:**

Name of Component	*Name of Manufacturer*	*Manufacturer Serial No.*	*NB No.*	*Other No.*	*Year Built*	*Corrected, Removed, or Installed*	*ASME Code Stamped (Yes or No)*
MS-RV-2D	Crosby	N63790-03-0054	N/A	N/A	1980	Corrected	Yes
Outlet Piping	Bechtel	MS(18)-2-17-P1	N/A	N/A	1983	Corrected	Yes
Superbolt	Superbolt, Inc.	HT M26231	N/A	N/A	2009	Installed	No
Jackbolt	Superbolt, Inc.	HT 216850	N/A	N/A	2009	Installed	No

7. **Description of Work:**

Replaced two "Superbolts" and two "Jackbolts" on the MS-RV-2D outlet flange (mechanical replacement).

8. **Test Conducted:** **Hydrostatic** ☐ **Pneumatic** ☐ **Nominal Operating Pressure** ☐ **Exempt** ☑

   Other ☐ **Pressure (psi):** N/A **Test Temperature (°F):** N/A

FORM NIS-2 OWNER'S REPORT FOR REPAIR/REPLACEMENT ACTIVITY

As Required by the Provisions of the ASME Code Section XI

FORM NIS-2 (Back)

9. **Remarks:**

CERTIFICATE OF COMPLIANCE

I certify that the statements made in the report are correct and that this conforms to the requirements of the ASME Code, Section XI.

Type Code Symbol Stamp: Not Applicable
Certificate of Authorization No.: Not Applicable
Expiration Date: Not Applicable

Signed: _____ **Date:** 6/18/09
Owner or Owner's Designee, Title

CERTIFICATE OF INSERVICE INSPECTION

I, Link J. Sherman, the undersigned, holding a valid commission issued by the National Board of Boiler and Pressure Vessel Inspectors and the State or Province of Washington and employed by Hartford Steam Boiler of Connecticut of Hartford, Connecticut have inspected the components described in this Owner's Report during the period 5/24/2009 to 6/23/2009, and state that to the best of my knowledge and belief, the Owner has performed examinations and taken corrective measures described in this Owner's Report in accordance with the requirements of the ASME Code, Section XI.

By signing this certificate neither the inspector nor his employer makes any warranty, expressed or implied, concerning the examinations and corrective measures described in this Owner's Report. Furthermore, neither the inspector nor his employer shall be liable in any manner for any personal injury or property damage or a loss of any kind arising from or connected with this inspection.

_____ **Commissions:** 13172 WANI
Inspector's Signature — National Board, State, Province, and Endorsement

Date: 6/23/2009

FORM NIS-2 OWNER'S REPORT FOR REPAIR/REPLACEMENT ACTIVITY

As Required by the Provisions of the ASME Code Section XI

1. **Owner:** Energy Northwest
   Address P.O. Box 968
   Richland, WA 99352

   Date: 7/20/09

   Sheet: 1 of 1

2. **Plant:** Columbia Generating Station
   Address 76 North Power Plant Loop
   Richland, WA 99354

   Unit: 2

   Repair/Replacement Organization Work Order No. 01158899
   Work Plan No. 2-2221

3. **Work Performed by:** Energy Northwest
   Address: 76 North Power Plant Loop
   Richland, WA 99354

   Type Code Symbol Stamp: Not Applicable
   Authorization No. Not Applicable
   Expiration Date: Not Applicable

4. **Identification of System:** Reactor Building Closed Cooling Water (RCC)

5. (a) **Applicable Construction Code:** ASME Section III **Edition:** 1971 **Addenda:** W73 **Code Case:** (see Data Report)
   (b) **Applicable Edition of Section XI Used for Repair/Replacement Activity:** 2001 **Addenda:** 2003
   (c) **Applicable Section XI Code Case(s):** N/A

6. **Identification of Components:**

Name of Component	*Name of Manufacturer*	*Manufacturer Serial No.*	*NB No.*	*Other No.*	*Year Built*	*Corrected, Removed, or Installed*	*ASME Code Stamped (Yes or No)*
Piping: CRA-CC-1C	Bechtel	RCC(3)-1-P1	N/A	N/A	1983	Corrected	Yes

7. **Description of Work:**

Sixteen (16) total flange joints located in piping system CRA-CC-1C required mechanical replacement of Sixty Four (64) Studs and One Hundred Twenty Eight (128) Nuts. Piping CRA-CC-1C was installed/constructed to ASME Section III Code Class 3 requirements.

Following the mechanical replacement of bolting materials, a System Leakage Test and VT-2 Visual Examination were successfully performed.

8. **Test Conducted:** **Hydrostatic** ☐ **Pneumatic** ☐ **Nominal Operating Pressure** ☑ **Exempt** ☐

   Other ☐ **Pressure (psi):** 95 **Test Temperature (°F):** 71

FORM NIS-2 OWNER'S REPORT FOR REPAIR/REPLACEMENT ACTIVITY

As Required by the Provisions of the ASME Code Section XI

FORM NIS-2 (Back)

9. **Remarks:**

The replacement Stud material is SA-193 Grade B7. The replacement Nut material is SA-194 Grade 2H. The replacement bolting materials meet the Owner's Requirements and ASME Section XI.

CERTIFICATE OF COMPLIANCE

I certify that the statements made in the report are correct and that this conforms to the requirements of the ASME Code, Section XI.

Type Code Symbol Stamp: Not Applicable
Certificate of Authorization No.: Not Applicable **Expiration Date:** Not Applicable

Signed: PLE **Date:** 7/20/09
Owner or Owner's Designee, Title

CERTIFICATE OF INSERVICE INSPECTION

I, Link J. Sherman, the undersigned, holding a valid commission issued by the National Board of Boiler and Pressure Vessel Inspectors and the State or Province of Washington and employed by Hartford Steam Boiler of Connecticut of Hartford, Connecticut have inspected the components described in this Owner's Report during the period 5/29/2009 to 7/23/2009, and state that to the best of my knowledge and belief, the Owner has performed examinations and taken corrective measures described in this Owner's Report in accordance with the requirements of the ASME Code, Section XI.

By signing this certificate neither the inspector nor his employer makes any warranty, expressed or implied, concerning the examinations and corrective measures described in this Owner's Report. Furthermore, neither the inspector nor his employer shall be liable in any manner for any personal injury or property damage or a loss of any kind arising from or connected with this inspection.

Inspector's Signature **Commissions:** 13172 WANI
National Board, State, Province, and Endorsement

Date: 7/23/2009

PLAN No 2-2222

ENERGY NORTHWEST
People · Vision · Solutions

FORM NIS-2 OWNER'S REPORT FOR REPAIR/REPLACEMENT ACTIVITY
As Required By The Provisions Of The ASME Code Section XI

Date: 07/23/2009
Sheet: 1 Of 1
Unit: Not Applicable

1. Owner: Energy Northwest
Address: Columbia Generating Station, North Power Plant Loop, Richland, Washington, 99352
2. Plant: Columbia Generating Station
Address: Columbia Generating Station, North Power Plant Loop, Richland, Washington, 99352
3. (a) Work Performed By: Energy Northwest
(b) Repair/Replacement Organization P.O. No, Job No, etc.: Energy Northwest
(c) Type Code Symbol Stamp: Not Applicable
(d) Certificate Of Authorization No.: Not Applicable
(e) Expiration Date: Not Applicable
4. Identification Of System: Residual heat Removal (RHR) System
5. (a) Applicable Construction Code: ASME Section III, Code Class 2, 1971 Edition with Summer 1973 Addenda, Code Case: Note 1
(b) Applicable Edition Of ASME Section XI Used For Repair/Replacement Activity: 2001 Edition with 2003 Addenda
(c) Applicable ASME Section XI Case(s): None
6. Identification Of Components

Name Of Component	Name Of Manufacturer	Manufacturer's Serial No	National Board No	Other I.D.	Year Built	Corrected, Removed Or Installed	ASME Code Stamped (Yes Or No) Code Class
RHR-P-2B	Ingersoll Rand	473111	N/A	N/A	1974	See Item 7 Below	Yes, Code Class 2

7. Description Of Work Performed: Machined gland plate internal mating ring support surfaces.

NOTES -

1) The applicable ASME Code Cases, if any are listed on the ASME Code Data Reports.

PLAN No 2-2222

ENERGY NORTHWEST
People·Vision·Solutions

FORM NIS-2 OWNER'S REPORT FOR REPAIR/REPLACEMENT ACTIVITY (Back)

8 Tests Conducted: Hydrostatic [ ] Pneumatic [ ] Nominal Operating Pressure [ ] Other [ ]
Exempt [X] Test Pressure: Psig Test Temperature: °F

9. Remarks (Applicable Manufacturer's Data Reports to be attached): None

CERTIFICATE OF COMPLIANCE

I certify that the statements made in this Owner's Report are correct and that this conforms to the requirements of the ASME Code, Section XI.
Type Code Symbol Stamp: Not Applicable
Certificate Of Authorization No.: Not Applicable
Expiration Date: Not Applicable

Prepared By Kuldip Singh - Program Lead Engineer (PLE) Signed By Kuldip Singh - Program Lead Engineer (PLE)

Date 7/27/09 Date 7/27/09

CERTIFICATE OF INSERVICE INSPECTION

I, the undersigned, holding a valid commission issued by the National Board of Boiler and Pressure Vessel Inspectors and the State of Washington *and employed by* Hartford Steam Boiler Of Connecticut of Hartford, Connecticut *have inspected the components described in this Owner's Report during the period* 5-4-2009 *to* 7-29-2009 *and state to the best of my knowledge and belief, the Owner has performed examinations and taken corrective measures described in this Owner's Report in accordance with the requirements of the ASME Code, Section XI.*
By signing this certificate neither the Inspector nor his employer makes any warranty, expressed or implied, concerning the examinations and corrective measures described in this Owner's Report. Furthermore, neither the Inspector nor his employer shall be liable in any manner for any personal injury or property damage or a loss of any kind arising from or connected with this inspection.

Frank A. Allgaier Inspector's Signature Commissions 13324 W A N I National Board, State, and Endorsements

Date 7-29-09

FORM NIS-2 OWNER'S REPORT FOR REPAIR/REPLACEMENT ACTIVITY

As Required by the Provisions of the ASME Code Section XI

1. **Owner:** Energy Northwest
   Address P.O. Box 968
   Richland, WA 99352

   Date: 7/22/09

   Sheet: 1 of 1

2. **Plant:** Columbia Generating Station
   Address 76 North Power Plant Loop
   Richland, WA 99354

   Unit: 2

   Repair/Replacement Organization Work Order No. 01108776
   Work Plan No. 2-2224

3. **Work Performed by:** Energy Northwest
   Address: 76 North Power Plant Loop
   Richland, WA 99354

   Type Code Symbol Stamp: Not Applicable
   Authorization No. Not Applicable
   Expiration Date: Not Applicable

4. **Identification of System:** Reactor Feedwater (RFW)

5. (a) **Applicable Construction Code:** ASME Section III **Edition:** 1971 **Addenda:** W72 **Code Case:** N/A

   (b) **Applicable Edition of Section XI Used for Repair/Replacement Activity:** 2001 **Addenda:** 2003

   (c) **Applicable Section XI Code Case(s):** N/A

6. **Identification of Components:**

Name of Component	*Name of Manufacturer*	*Manufacturer Serial No.*	*NB No.*	*Other No.*	*Year Built*	*Corrected, Removed, or Installed*	*ASME Code Stamped (Yes or No)*
Valve: RFW-V-10A	Anchor/Darling	1N260	N/A	N/A	1977	Corrected	Yes

7. **Description of Work:**

RFW-V10A is an ASME Section III Code Class 1 constucted valve. Five (5) existing Hinge Pin Cover Studs and Six (6) Hinge Pin Cover Nuts were mechanically replaced.

RFW-V-10A was Pressure Tested and a VT-2 Visual Examination was successfully performed following the Repair/Replacement Activity. The System Leakage Test was performed during the OSP-RPV-R801 Reactor Pressure Vessel Leakage Test during Refueling Outage R-19.

8. **Test Conducted:** **Hydrostatic** ☐ **Pneumatic** ☐ **Nominal Operating Pressure** ☐ **Exempt** ☐

   Other ☑ **Pressure (psi):** 1020 **Test Temperature (°F):** 165

FORM NIS-2 OWNER'S REPORT FOR REPAIR/REPLACEMENT ACTIVITY

As Required by the Provisions of the ASME Code Section XI

FORM NIS-2 (Back)

9. **Remarks:**

The replacement Stud material is SA-193 Grade B7. The replacement Nut material is SA-194 Grade 2H. The replacement bolting materials meet the Owner's Requirements and ASME Section XI.

CERTIFICATE OF COMPLIANCE

I certify that the statements made in the report are correct and that this conforms to the requirements of the ASME Code, Section XI.

Type Code Symbol Stamp: Not Applicable
Certificate of Authorization No.: Not Applicable **Expiration Date:** Not Applicable

Signed: [signature] PLE **Date:** 7/22/09
Owner or Owner's Designee, Title

CERTIFICATE OF INSERVICE INSPECTION

I, Link J. Sherman, the undersigned, holding a valid commission issued by the National Board of Boiler and Pressure Vessel Inspectors and the State or Province of Washington and employed by Hartford Steam Boiler of Connecticut of Hartford, Connecticut have inspected the components described in this Owner's Report during the period 6/4/2009 to 7/22/2009, and state that to the best of my knowledge and belief, the Owner has performed examinations and taken corrective measures described in this Owner's Report in accordance with the requirements of the ASME Code, Section XI.

By signing this certificate neither the Inspector nor his employer makes any warranty, expressed or implied, concerning the examinations and corrective measures described in this Owner's Report. Furthermore, neither the Inspector nor his employer shall be liable in any manner for any personal injury or property damage or a loss of any kind arising from or connected with this inspection.

[signature] **Commissions:** 13172 WANI
Inspector's Signature National Board, State, Province, and Endorsement

Date: 7/22/2009

PLAN No 2-2225

ENERGY NORTHWEST
People·Vision·Solutions

FORM NIS-2 OWNER'S REPORT FOR REPAIR/REPLACEMENT ACTIVITY
As Required By The Provisions Of The ASME Code Section XI

1. Owner: Energy Northwest
Address: Columbia Generating Station, North Power Plant Loop, Richland, Washington, 99352
2. Plant: Columbia Generating Station
Address: Columbia Generating Station, North Power Plant Loop, Richland, Washington, 99352

Date: 03/26/2009
Sheet: 1 Of 1
Unit: Not Applicable

3. (a) Work Performed By: NWS Technologies, LLC, 131 Venture Boulevard, Spartanburg, SC 29306
(b) Repair/Replacement Organization P.O. No, Job No, etc.: PO No 313236
(c) Type Code Symbol Stamp: NWS Technologies, LLC, VR And NR
(d) Certificate Of Authorization No.: NWS Technologies, LLC, VR No 632 And NR No 81
(e) Expiration Date: NWS Technologies, LLC, VR - April 03, 2009 And NR - April 09, 2009
4. Identification Of System: Main Steam (MS) System
5. (a) Applicable Construction Code: ASME Section III, Code Class 1, 1971 Edition with no Addenda, Code Case: See Note 1
(b) Applicable Edition Of ASME Section XI Used For Repair/Replacement Activity: 2001 Edition with 2003 Addenda
(c) Applicable ASME Section XI Case(s): None
6. Identification Of Components

Name Of Component	Name Of Manufacturer	Manufacturer's Serial No	National Board No	Other I.D.	Year Built	Corrected, Removed Or Installed	ASME Code Stamped (Yes Or No) Code Class
Spare Valve	Crosby	N63790-03-0046	N/A	N/A	1980	See Item 7 Below	Yes, Code Class 1
Disc Insert	Crosby	N97499-31-0012	N/A	N/A	N/A	Removed	No, Code Class 1
Disc Insert	Crosby	N97499-46-0128	N/A	N/A	N/A	Installed	No, Code Class 1
Nozzle	Crosby	N97498-36-0118	N/A	N/A	N/A	Removed	No, Code Class 1
Nozzle	Crosby	N97498-55-0170	N/A	N/A	N/A	Installed	No, Code Class 1

7. Description Of Work Performed: Spare Main Steam Relief Valve (MSRV), Serial No N63790-03-0046 was refurbished by NWS Technologies, LLC, 131 Venture Boulevard, Spartanburg, SC 29306. The work was performed in accordance with NWS Technologies, LLC VR and NR programs as follows:

1) Disassembled the relief valve to perform the required work.
2) Removed existing disc insert Serial No N97499-31-0012 from the relief valve.
3) Installed replacement (modified) disc insert Serial No N97499-46-0128 in the relief valve.
4) Removed existing nozzle Serial No N97498-36-0118 from the relief valve.
5) Installed replacement (modified) nozzle Serial No N97498-55-0170 in the relief valve.
6) Reassembled the relief valve.
7) Tested the relief valve to verify set pressure of 1165 PSIG. Test results acceptable.
8) Performed VT-2 visual examination during pressure test to confirm pressure boundary integrity of the body to bonnet joint. No evidence of leakage during the pressure test.

NOTES

1) The applicable ASME Code Cases, if any are listed on the ASME Code Data Reports.

PLAN No 2-2225

ENERGY NORTHWEST
People · Vision · Solutions

FORM NIS-2 OWNER'S REPORT FOR REPAIR/REPLACEMENT ACTIVITY (Back)

8 Tests Conducted: Hydrostatic [ ] **Pneumatic** [X] **Nominal Operating Pressure** [ ] **Other** [ ]
Exempt [ ] **Test Pressure:** 10 to 15 Psig **Test Temperature:** 78° F

9. Remarks (Applicable Manufacturer's Data Reports to be attached): See attached NVR-1 Code Data Report "Report Of Repair And Replacement Of Nuclear Pressure Relief Devices" for Main Steam Relief Valve (MSRV), Serial No N63790-03-0046, 2) See attached R-4 Code Data Report "Report Supplementary Sheet (NVR-1)" for Main Steam Relief Valve (MSRV), Serial No N63790-03-0046, 3) See attached NV-1 Code Data Report for Main Steam Relief Valve (MSRV), Serial No N63790-00-0046 (Post Modification Serial No N63790-03-0046).

CERTIFICATE OF COMPLIANCE

I certify that the statements made in this Owner's Report are correct and that this conforms to the requirements of the ASME Code, Section XI.
Type Code Symbol Stamp: Not Applicable
Certificate Of Authorization No.: Not Applicable
Expiration Date: Not Applicable

Prepared By Kuldip Singh - Program Lead Engineer (PLE) ***Signed By*** Kuldip Singh - Program Lead Engineer (PLE)

Date 3/26/09 ***Date*** 3/26/09

CERTIFICATE OF INSERVICE INSPECTION

I, the undersigned, holding a valid commission issued by the National Board of Boiler and Pressure Vessel Inspectors and the State of Washington ***and employed by*** Hartford Steam Boiler Of Connecticut of Hartford, Connecticut ***have inspected the components described in this Owner's Report during the period*** 7/16/2008 ***to*** 3/26/2009 ***and state to the best of my knowledge and belief, the Owner has performed examinations and taken corrective measures described in this Owner's Report in accordance with the requirements of the ASME Code, Section XI.***
By signing this certificate neither the Inspector nor his employer makes any warranty, expressed or implied, concerning the examinations and corrective measures described in this Owner's Report. Furthermore, neither the Inspector nor his employer shall be liable in any manner for any personal injury or property damage or a loss of any kind arising from or connected with this inspection.

Inspector's Signature ***Commissions*** 13172 WANI
National Board, State, and Endorsements

Date 3/26/2009

PLANT No. 2-2225

FORM NVR-1 REPORT OF REPAIR ☒ REPLACEMENT ☒
OF NUCLEAR PRESSURE RELIEF DEVICES

1. Work performed by: **NWS Technologies, LLC** Purchase Order # 313236 3/16/09
131 Venture Boulevard, Spartanburg, SC 29306

2. Work performed for: Energy Northwest - Columbia Generating Station

3/4. Owner - name, address and identification of nuclear power plant: Energy Northwest - Columbia Generating Station, North Power Plant Loop, Richland, WA 99352-0968

5. a: Repaired pressure relief device: Main Steam Safety Relief Valve
b: Name of manufacturer: Crosby Valve & Gage Co.
c: Identifying nos.

HB-65-BP-FN	new s/n: **N63790-03-0046**	N/A	steam	6 x 10	1980
(type)	(mfr's S/N)	(NB#)	(service)	(size)	(yr.built)

d: Construction Code:

ASME Sec. III Div. 1	1971	N/A	N/A	1
(name/section/division)	(edition)	(addenda)	(Code Cases(s))	(Code Class)

6. ASME Code Section XI applicable for inservice inspection:

2001	2003	N/A
(edition)	(addenda)	(Code Case(s))

7. ASME Code Section XI used for repairs, replacements:

2001	2003	N/A
(edition)	(addenda)	(Code Case(s))

8. Construction Code used for repairs, replacements:

1971	N/A	N/A
(edition)	(addenda)	(Code Case(s))

9. Design responsibilities: N/A

10. Opening pressure: 1165 psig
Set-pressure adjustment made at: NWS Technologies, LLC using steam

11. Description of work (include name and identifying number of replacement parts): See Form R-4 Report Supplementary Sheet

12. Remarks:

CERTIFICATE OF COMPLIANCE

I, Cesar V. Sierra certify that to the best of my knowledge and belief the statements made in this report are correct and the repair, modification or replacement of the pressure relief devices described above conforms to Section XI of the ASME Code and the National Board Inspection Code "VR" and "NR" rules.
National Board Certificate of Authorization No. **632** to use the "VR" stamp expires April 3, 2009.
National Board Certificate of Authorization No. **81** to use the "NR" stamp expires April 9, 2009.

2/15/09	**NWS Technologies, LLC**		Manager, QA
Date	Repair Organization	Authorized representative	Title

CERTIFICATE OF INSPECTION

I, **Charles F. Toegel Jr.** holding a valid commission issued by The National Board of Boiler and Pressure Vessel Inspectors and certificate of competency issued by the jurisdiction of **North Carolina** and employed by **Hartford Steam Boiler of CT** of Hartford, CT have inspected the repair, modification or replacement described in this report on 16 FEB 2009 and state that to the best of my knowledge and belief, this repair, modification or replacement has been completed in accordance with Section XI of the of the ASME Code and the National Board Inspection Code "VR" and "NR" rules.
By signing this certificate, neither the undersigned nor my employer makes any warranty, expressed or implied, concerning this repair, modification or replacement described in this report. Furthermore, neither the undersigned nor my employer shall be liable in any manner for any personal injury, property damage or loss of any kind arising from or connected with this inspection.

2/16/09		**NB # 8462, A, N, I NC# 1073**
Date	Inspector's Signature	Commissions (NB (incl endorsements), jurisdiction,& no.)

FORM R-4 REPORT SUPPLEMENTARY SHEET (NVR-1)

in accordance with provisions of the National Board Inspection Code

1. Work performed by: **NWS Technologies, LLC** Valve S/N: **N63790-03-0046**
   131 Venture Boulevard, Spartanburg, SC 29306

2. Owner: Energy Northwest - Columbia Generating Station

3. Location of installation Energy Northwest - Columbia Generating Station
   North Power Plant Loop, Richland, WA 99352-0968

Purchase Order # 313236

Reference Line No.

Continued from Form NVR-1 for Valve S/N N63790-03-0046

11. NWS Traveler # 02-140
    The valve was disassembled.

    Parts replaced during the repair include:
    Nozzle: S/N N97498-55-0170
    Disc Insert: New S/N N97499-46-0128
    Spindle: K82137-43-0043
    Bellows/Disc Ring Assembly: K55484-47-0260
    Eductor Gasket: MC 56230461

    MC 56230461

    After reassembly, the valve set-pressure was certified using steam as the lift medium.
    The valve was then jacked and lapped to restore seat integrity.
    A final steam seat tightness test was then done at 93% of set-pressure.

Date 2/15/09 Signed _____ (authorized representative) Name: Cesar V. Sierra (authorized representative)

Date 2/16/09 Signed _____ (inspector) Commissions: **NB# 8462, A,N,I NC# 1073** (National Board and jurisdiction no.)

PLAN No. 2-2225

CROSBY

CROSBY VALVE & GAGE COMPANY
WRENTHAM, MASS

Philip Smith
3/16/09

FORM NV-1 FOR SAFETY AND SAFETY RELIEF VALVES
As Required by the Provisions of the ASME Code Rules

Q.C.-44D

DATA REPORT
Safety and Safety Relief Valves

FOR INFORMATION ONLY

1. Manufactured By Crosby Valve & Gage Company, 43 Kendrick St., Wrentham, MA 02093
Name and Address

Model No. HB-65-BP-FN Order No. N94275 Contract Date 4/24/79 National Board No. N/A

2. Manufactured For General Electric Company, 175 Curtner Ave., San Jose, CA 95125 Order No. 205-AJ986
Name and Address

3. Owner Washington Public Power Supply System, Richland, Washington 99352
Name and Address

4. Location of Plant Hanford Reservation, Richland, Washington 99352

5. Valve Identification MPL #B22-F013 Serial No N63790-00-0046 Drawing No. DS-A-63790 Rev. C

Type Safety Relief (Safety, Safety Relief, Pilot, Power Actuated) Orifice Size R Inch Pipe Size -- Inch Inlet 6 Inch Outlet 10 Inch

6. Set Pressure (psig) 1150 575° F (Rated Temperature)

Stamped Capacity 865, 725 @ 3 % Overpressure -- Blowdown (psig) 2% to 11%

Hydrostatic Test (psig) Inlet 2370 Outlet 975 psig (Assembled Valve) 1100 psig (Body Only)
(Applicable to Valves for Closed Systems Only)

Pressure Retaining Pieces

	Serial No. Identification	Material Specification Including Type or Grade
a. ~~XXXXXXX~~ Bar Stock & Forgings		
Body	N93183-35-0065	ASTM A105-71 Gr. II ASME SA105 Gr. II
Bonnet	N93407-35-0028	ASTM A105-71 Gr. II ASME SA105 Gr. II
b. ~~XXXXXXXXXXXXXXXXXXXX~~		
~~XXXXXXXXXXXX~~ Disc Insert	N93185-34-0077	ASME SA637 Gr. 718
Nozzle	N93184-32-0048	ASME SA182 Gr. F316
Disc Holder *K55484-35-0094	*N89714-34-0082	AMS 5662B
Spring Washers K62858-35-0028	K62856-35-0084 K62857-35-0049	ASTM A105-71 Gr. II ASME SA105 Gr. II
Adjusting Bolt	N93410-33-0053	ASME SA193 Gr. B6
Spindle Point K62873-37-0139	N89720-43-0136	ASME SA564 Type 630
c. Spring K62858-35-0028	*N89722-0002	ASTM A304-66 Gr. 4161H
d. Bolting		7X00380095
e. ~~XXXXXXXXXX~~ Spindle Ball K62873-37-0139	N93213-0206	Stoody #6
Thrust Bearing Adapter	N93409-32-0048	ASME SA193 Gr. B6
Bonnet Stud (I17)	N93207-0549 thru 0560	ASTM A193-71 Gr. B7 ASME SA193 Gr. B7
Bonnet Stud Nut (J87)	N93210-0769 thru 0780	ASME SA194 Gr. 2H
Inlet Stud (BW6)	N93216-0551 thru 0562	ASTM A193-71 Gr. B7 ASME SA193 Gr. B7
Inlet Stud Nut (BW8)	N93218-0555 thru 0566	ASTM SA194-71 Gr. 2H ASME SA194 Gr. 2H
Adjusting Bolt Button K63618-32-0045	N93411-32-0045	ASME SA193 Gr. B6

Valve originally built against Crosby Order No. N103600, Assembly No. N56000. Valve modification consists of replacement of the Disc Insert, Nozzle, Bonnet Stud Nuts, Adjusting Bolt, and Thrust Bearing Adapter, remachining of the Body, Spring Washers, Bonnet, and Spindle Assembly, and adding an Adjusting Bolt Button Assembly. New Serialization is required unless indicated by an asterisk.
Original nameplate removed and new nameplate attached.

N163790-00-00410

CERTIFICATE OF COMPLIANCE

We certify that the statements made in this report are correct and that this valve conforms to the rules of construction of the ASME Code for Nuclear Power Plant Components, Section III, Div. 1, 1971 Edition, Addenda No Addenda (Date), Code Case No. 1567 & 1711.
Class 1

Date 11-5-80 Signed Crosby Valve & Gage Co. (N Certificate Holder) by R.A. Cavanaugh

Our ASME Certificate of Authorization No. 1878 to use the NV symbol expires September 30, 1983 (Date).

CERTIFICATION OF DESIGN

Design information on file at Crosby Valve & Gage Company

Stress analysis report (Class 1 only) on file at Crosby Valve & Gage Company
43 Kendrick Street, Wrentham, Massachusetts 02093

Design specifications certified by[1] Boyd P. Brooks

PE State California Reg. No. 13655

Stress report certified by[1] W.D. Greenlaw

PE State Massachusetts Reg. No. 14784

[1]Signature not required - list name only.

FOR INFORMATION ONLY

CERTIFICATE OF SHOP INSPECTION

I, the undersigned, holding a valid commission issued by the National Board of Boiler and Pressure Vessel Inspectors and the State or Province of Massachusetts and employed by Factory Mutual Systems* of Norwood, Massachusetts have inspected the pump, or valve, described in this Data Report on 1/9, 19 81 and state that to the best of my knowledge and belief, the N Certificate Holder has constructed this pump, or valve, in accordance with the ASME Code for Nuclear Power Plant Components.

By signing this certificate, neither the Inspector nor his employer makes any warrant, expressed or implied, concerning the equipment described in this Data Report. Furthermore, neither the Inspector nor his employer shall be liable in any manner for any personal injury or property damage or a loss of any kind arising from or connected with this inspection.

Date 1/9 19 81.

Signed John E. Moore (Inspector) Commissions MASS 1266 (Nat'l. Bd., State, Prov. and No.)

*Arkwright-Boston Manufacturers Mutual Insurance Company - Mutual Boiler & Machinery Div.

ZX00380096

PLAN No 2-2226

ENERGY NORTHWEST
People·Vision·Solutions

FORM NIS-2 OWNER'S REPORT FOR REPAIR/REPLACEMENT ACTIVITY
As Required By The Provisions Of The ASME Code Section XI

1. Owner: Energy Northwest
Address: Columbia Generating Station, North Power Plant Loop, Richland, Washington, 99352
2. Plant: Columbia Generating Station
Address: Columbia Generating Station, North Power Plant Loop, Richland, Washington, 99352

Date: 03/13/2009
Sheet: 1 Of 1
Unit: Not Applicable

3. (a) Work Performed By: NWS Technologies, LLC, 131 Venture Boulevard, Spartanburg, SC 29306
(b) Repair/Replacement Organization P.O. No, Job No, etc.: PO No 326692
(c) Type Code Symbol Stamp: NWS Technologies, LLC, VR And NR
(d) Certificate Of Authorization No.: NWS Technologies, LLC, VR No 632 And NR No 81
(e) Expiration Date: NWS Technologies, LLC, VR - April 03, 2009 And NR - April 09, 2009
4. Identification Of System: Main Steam (MS) System
5. (a) Applicable Construction Code: ASME Section III, Code Class 1, 1971 Edition with no Addenda, Code Case: See Note 1
(b) Applicable Edition Of ASME Section XI Used For Repair/Replacement Activity: 2001 Edition with 2003 Addenda
(c) Applicable ASME Section XI Case(s): None
6. Identification Of Components

Name Of Component	Name Of Manufacturer	Manufacturer's Serial No	National Board No	Other I.D.	Year Built	Corrected, Removed Or Installed	ASME Code Stamped (Yes Or No) Code Class
Spare Valve	Crosby	N63790-03-0047	N/A	N/A	1981	See Item 7 Below	Yes, Code Class 1

7. Description Of Work Performed: Spare Main Steam Relief Valve (MSRV), Serial No N63790-03-0047 was refurbished by NWS Technologies, LLC, 131 Venture Boulevard, Spartanburg, SC 29306. The work was performed in accordance with NWS Technologies, LLC VR and NR programs as follows:

1) Disassembled the relief valve to perform the required work.
2) Removed and reinstalled existing disc insert in the relief valve.
3) Removed and reinstalled existing nozzle in the relief valve.
4) Reassembled the relief valve.
5) Installed one (1) Heli-Coil insert in inlet hole location # 1.
6) Installed three (3) replacement studs for the relief valve inlet joint. See Note 2.
7) Tested the relief valve to verify set pressure of 1175 PSIG. Test results acceptable.
8) Performed VT-2 visual examination during pressure test to confirm pressure boundary integrity of the body to bonnet joint. No evidence of leakage during the pressure test.

NOTES -

1 The applicable ASME Code Cases, if any are listed on the ASME Code Data Reports.
2) Energy Northwest performed VT-1 visual examination on three (3) replacement studs for the relief valve inlet joint. VT-1 visual examination results acceptable.

PLAN No 2-2226

ENERGY NORTHWEST
People · Vision · Solutions

FORM NIS-2 OWNER'S REPORT FOR REPAIR/REPLACEMENT ACTIVITY (Back)

8 Tests Conducted: Hydrostatic [ ] **Pneumatic** [X] **Nominal Operating Pressure** [ ] **Other** [ ]
Exempt [ ] **Test Pressure:** 10 to 15 Psig **Test Temperature:** 78° F

9. Remarks (Applicable Manufacturer's Data Reports to be attached): See attached NVR-1 Code Data Report "Report Of Repair And Replacement Of Nuclear Pressure Relief Devices" for Main Steam Relief Valve (MSRV), Serial No N63790-03-0047, 2) See attached R-4 Code Data Report "Report Supplementary Sheet (NVR-1)" for Main Steam Relief Valve (MSRV), Serial No N63790-03-0047, 3) See attached NV-1 Code Data Report for Main Steam Relief Valve (MSRV), Serial No N63790-00-0047 (Post Modification Serial No N63790-03-0047).

CERTIFICATE OF COMPLIANCE

I certify that the statements made in this Owner's Report are correct and that this conforms to the requirements of the ASME Code, Section XI.
Type Code Symbol Stamp: Not Applicable
Certificate Of Authorization No.: Not Applicable
Expiration Date: Not Applicable

Prepared By Kuldip Singh — Kuldip Singh - Program Lead Engineer (PLE)
Date 3/16/09

Signed By Kuldip Singh — Kuldip Singh - Program Lead Engineer (PLE)
Date 3/16/09

CERTIFICATE OF INSERVICE INSPECTION

I, the undersigned, holding a valid commission issued by the National Board of Boiler and Pressure Vessel Inspectors and the State of Washington ***and employed by*** Hartford Steam Boiler Of Connecticut of Hartford, Connecticut ***have inspected the components described in this Owner's Report during the period*** 7/11/2008 ***to*** 3/26/2009 ***and state to the best of my knowledge and belief, the Owner has performed examinations and taken corrective measures described in this Owner's Report in accordance with the requirements of the ASME Code, Section XI.***
By signing this certificate neither the Inspector nor his employer makes any warranty, expressed or implied, concerning the examinations and corrective measures described in this Owner's Report. Furthermore, neither the Inspector nor his employer shall be liable in any manner for any personal injury or property damage or a loss of any kind arising from or connected with this inspection.

Inspector's Signature

Commissions 13172 WANI
National Board, State, and Endorsements

Date 3/26/2009

PLAN No. 2-2226

FORM NVR-1 REPORT OF REPAIR ☒ REPLACEMENT ☒
OF NUCLEAR PRESSURE RELIEF DEVICES

1. Work performed by: **NWS Technologies, LLC** Purchase Order # 3/6/09 326692
131 Venture Boulevard, Spartanburg, SC 29306

2. Work performed for: Energy Northwest - Columbia Generating Station

3/4. Owner - name, address and identification of nuclear power plant: Energy Northwest - Columbia Generating Station, North Power Plant Loop, Richland, WA 99352-0968

5. a: Repaired pressure relief device: Main Steam Safety Relief Valve
b: Name of manufacturer: Crosby Valve & Gage Co.
c: Identifying nos.

HB-65-BP-FN	new s/n: N63790-03-0047	N/A	steam	6 x 10	1981
(type)	(mfr's S/N)	(NB#)	(service)	(size)	(yr.built)

d: Construction Code:

ASME Sec. III Div. 1	1971	N/A	N/A	1
(name/section/division)	(edition)	(addenda)	(Code Cases(s))	(Code Class)

6. ASME Code Section XI applicable for inservice inspection: 2001 (edition) 2003 (addenda) N/A (Code Case(s))

7. ASME Code Section XI used for repairs, replacements: 2001 (edition) 2003 (addenda) N/A (Code Case(s))

8. Construction Code used for repairs, replacements: 1971 (edition) N/A (addenda) N/A (Code Case(s))

9. Design responsibilities: N/A

10. Opening pressure: 1175 psig
Set-pressure adjustment made at: NWS Technologies, LLC using steam

11. Description of work (include name and identifying number of replacement parts): See Form R-4 Report Supplementary Sheet

12. Remarks:

CERTIFICATE OF COMPLIANCE

I, Cesar V. Sierra certify that to the best of my knowledge and belief the statements made in this report are correct and the repair, modification or replacement of the pressure relief devices described above conforms to Section XI of the ASME Code and the National Board Inspection Code "VR" and "NR" rules.
National Board Certificate of Authorization No. **632** to use the "VR" stamp expires April 3, 2009.
National Board Certificate of Authorization No. **81** to use the "NR" stamp expires April 9, 2009.

2/24/09	NWS Technologies, LLC	[signature]	Manager, QA
Date	Repair Organization	Authorized representative	Title

CERTIFICATE OF INSPECTION

I, **Charles F. Toegel Jr.** holding a valid commission issued by The National Board of Boiler and Pressure Vessel Inspectors and certificate of competency issued by the jurisdiction of **North Carolina** and employed by **Hartford Steam Boiler of CT** of Hartford, CT have inspected the repair, modification or replacement described in this report on 24 FEB 2009 and state that to the best of my knowledge and belief, this repair, modification or replacement has been completed in accordance with Section XI of the of the ASME Code and the National Board Inspection Code "VR" and "NR" rules.
By signing this certificate, neither the undersigned nor my employer makes any warranty, expressed or implied, concerning this repair, modification or replacement described in this report. Furthermore, neither the undersigned nor my employer shall be liable in any manner for any personal injury, property damage or loss of any kind arising from or connected with this inspection.

2/24/09	[signature]	NB # 8462, A, N, I NC# 1073
Date	Inspector's Signature	Commissions (NB (incl endorsements), jurisdiction,& no.)

FORM R-4 REPORT SUPPLEMENTARY SHEET (NVR-1)

In accordance with provisions of the National Board Inspection Code

1. Work performed by: **NWS Technologies, LLC** Valve S/N: **N63790-03-0047**
   131 Venture Boulevard, Spartanburg, SC 29306

2. Owner: Energy Northwest - Columbia Generating Station

3. Location of installation Energy Northwest - Columbia Generating Station
   North Power Plant Loop, Richland, WA 99352-0968

Purchase Order # 326692

Reference Line No.

Continued from Form NVR-1 for Valve S/N N63790-03-0047

11. NWS Traveler # 08-153
    The valve was disassembled.

    Parts replaced during the repair include:
    Eductor Gasket: MC 56230461
    Three Inlet Studs: Cat ID 54400514 Heat Code KMY
    One outlet flange Heli-Coil: MC 25003083 Ht # HT-US-81B4

    After reassembly, the valve set-pressure was certified using steam as the lift medium.
    The valve was then jacked and lapped to restore seat integrity.
    A final steam seat tightness test was then done at 93% of set-pressure.

Date 2/24/09 Signed _____ (authorized representative) Name: Cesar V. Sierra (authorized representative)

Date 2/24/09 Signed _____ (inspector) Commissions: **NB# 8462, A,N,I NC# 1073** (National Board and jurisdiction no.)

PLAN NO. 2-2226

CROSBY

CROSBY VALVE & GAGE COMPANY
WRENTHAM, MASS

FORM NV-1 FOR SAFETY AND SAFETY RELIEF VALVES — Q.C.-44D
As Required by the Provisions of the ASME Code Rules

DATA REPORT
Safety and Safety Relief Valves

1. Manufactured By Crosby Valve & Gage Company, 43 Kendrick St., Wrentham, MA 02093
Name and Address

Model No. HB-65-BP-FN Order No. N94275 Contract Date 4/24/79 National Board No. N/A

2. Manufactured For General Electric Company, 175 Curtner Ave., San Jose, CA 95125 Order No. 205-AJ986
Name and Address

3. Owner Washington Public Power Supply System, Richland, Washington 99352
Name and Address

4. Location of Plant Hanford Reservation, Richland, Washington 99352

5. Valve Identification MPL #B22-F013 Serial No. N63790-00-0047 Drawing No. DS-A-63790 Rev. C

Type Safety Relief (Safety, Safety Relief, Pilot, Power Actuated) Orifice Size R Inch Pipe Size -- Inch Inlet 6 Inch Outlet 10 Inch

6. Set Pressure (psig) 1175 575° F (Rated Temperature)

Stamped Capacity 884,314 @ 3 % Overpressure -- Blowdown (psig) 2% to 11%

Hydrostatic Test (psig) Inlet 2370 Outlet 975 psig (Assembled Valve) 1100 psig (Body Only)
(Applicable to Valves for Closed Systems Only)

Pressure Retaining Pieces

	Serial No. Identification	Material Specification Including Type or Grade
a. Bar Stock & Forgings		
Body	N93183-35-0066	ASTM A105-71 Gr. II ASME SA105 Gr. II
Bonnet	N93407-35-0029	ASTM A105-71 Gr. II ASME SA105 Gr. II
b.		
Disc Insert	N93185-34-0078	ASME SA637 Gr. 718
Nozzle	N93184-32-0049	ASME SA182 Gr. F316
Disc Holder *K55484-35-0098	*N89714-34-0136	AMS 5662B
Spring Washers K62858-35-0029	K62856-35-0085 K62857-35-0050	ASTM A105-71 Gr. II ASME SA105 Gr. II
Adjusting Bolt	N93410-33-0054	ASME SA193 Gr. B6
Spindle Point K62873-37-0148	N89720-43-0147	ASTM A564-71 Type 630 ASME SA564 Type 630
c. Spring K62858-35-0029	*N89722-0003	ASTM A304-66 Gr. 4161 H
d. Bolting		7X00380110
e. Spindle Ball K62873-37-0148	N93213-0215	Stoody #6
Thrust Bearing Adapter	N93409-32-0049	ASME SA193 Gr. B6
Bonnet Stud (BW5, I17)	N93207-0561 thru 0572	ASTM A193-71 Gr. B7 ASME SA193 Gr. B7
Bonnet Stud Nut (J87)	N93210-0781 thru 0792	ASME SA194 Gr. 2H
Inlet Stud (BW6)	N93216-0563 thru 0574	ASTM A193-71 Gr. B7 ASME SA193 Gr. B7
Inlet Stud Nut (BW8)	N93218-0567 thru 0578	ASTM A194-71 Gr. 2H ASME SA194 Gr. 2H
Adjusting Bolt Button K63618-33-0055	N93411-33-0055	ASME SA193 Gr. B6

...ification consists of replacement of the Disc Insert, Nozzle, Bonnet Stud Nuts, ...justing Bolt, and Thrust Bearing Adapter, remachining of the Body, Spring Washers, Bonnet, and Spindle Assembly, and adding an Adjusting Bolt Button Assembly. New Serialization is required unless indicated by an asterisk. Original nameplate removed and new nameplate attached.

MS-RV-2C
N63790-00-0047

CERTIFICATE OF COMPLIANCE

We certify that the statements made in this report are correct and that this valve conforms to the rules of construction of the ASME Code for Nuclear Power Plant Components, Section III, Div. 1, 1971 Edition, Addenda No Addenda (Date), Code Case No. 1567 & 1711.

Class 1

Date 11-5-80 Signed Crosby Valve & Gage Co. (N Certificate Holder) by R.G. Casavant

Our ASME Certificate of Authorization No. 1878 to use the NV symbol expires September 30, 1983 (Date).

CERTIFICATION OF DESIGN

Design information on file at Crosby Valve & Gage Company

Stress analysis report (Class 1 only) on file at Crosby Valve & Gage Company 43 Kendrick Street, Wrentham, Massachusetts 02093

Design specifications certified by[1] Boyd P. Brooks

PE State California Reg. No. 13655

Stress report certified by[1] W.D. Greenlaw

PE State Massachusetts Reg. No. 14784

[1]Signature not required - list name only.

CERTIFICATE OF SHOP INSPECTION

I, the undersigned, holding a valid commission issued by the National Board of Boiler and Pressure Vessel Inspectors and the State or Province of Massachusetts and employed by Factory Mutual Systems* of Norwood, Massachusetts have inspected the pump, or valve, described in this Data Report on 1/9, 19 81 and state that to the best of my knowledge and belief, the N Certificate Holder has constructed this pump, or valve, in accordance with the ASME Code for Nuclear Power Plant Components.

By signing this certificate, neither the Inspector nor his employer makes any warrant, expressed or implied, concerning the equipment described in this Data Report. Furthermore, neither the Inspector nor his employer shall be liable in any manner for any personal injury or property damage or a loss of any kind arising from or connected with this inspection.

Date 1/9 19 81.

Signed John Dunne (Inspector) Commissions MASS 1266 (Nat'l. Bd., State, Prov. and No.)

FOR INFORMATION ONLY

*Arkwright-Boston Manufacturers Mutual Insurance Company - Mutual Boiler & Machinery Div.

ZX00380111

PLAN No 2-2227

ENERGY NORTHWEST
People · Vision · Solutions

FORM NIS-2 OWNER'S REPORT FOR REPAIR/REPLACEMENT ACTIVITY
As Required By The Provisions Of The ASME Code Section XI

Date: 03/16/2009
Sheet: 1 Of 1
Unit: Not Applicable

1. **Owner:** Energy Northwest
   Address: Columbia Generating Station, North Power Plant Loop, Richland, Washington, 99352
2. **Plant:** Columbia Generating Station
   Address: Columbia Generating Station, North Power Plant Loop, Richland, Washington, 99352
3. **(a) Work Performed By:** NWS Technologies, LLC, 131 Venture Boulevard, Spartanburg, SC 29306
   (b) Repair/Replacement Organization P.O. No, Job No, etc.: PO No 326692
   (c) Type Code Symbol Stamp: NWS Technologies, LLC, VR And NR
   (d) Certificate Of Authorization No.: NWS Technologies, LLC, VR No 632 And NR No 81
   (e) Expiration Date: NWS Technologies, LLC, VR - April 03, 2009 And NR - April 09, 2009
4. **Identification Of System:** Main Steam (MS) System
5. **(a) Applicable Construction Code:** ASME Section III, Code Class 1, 1971 Edition with no Addenda, Code Case: See Note 1
   (b) Applicable Edition Of ASME Section XI Used For Repair/Replacement Activity: 2001 Edition with 2003 Addenda
   (c) Applicable ASME Section XI Case(s): None
6. **Identification Of Components**

Name Of Component	Name Of Manufacturer	Manufacturer's Serial No	National Board No	Other I.D.	Year Built	Corrected, Removed Or Installed	ASME Code Stamped (Yes Or No) Code Class
Spare Valve	Crosby	N63790-03-0049	N/A	N/A	1980	See Item 7 Below	Yes, Code Class 1
Nozzle	Crosby	N97498-33-0055	N/A	N/A	N/A	Removed	No, Code Class 1
Nozzle	Crosby	N97498-54-0169	N/A	N/A	N/A	Installed	No, Code Class 1

7. **Description Of Work Performed:** Spare Main Steam Relief Valve (MSRV), Serial No N63790-03-0049 was refurbished by NWS Technologies, LLC, 131 Venture Boulevard, Spartanburg, SC 29306. The work was performed in accordance with NWS Technologies, LLC VR and NR programs as follows:
   1) Disassembled the relief valve to perform the required work.
   2) Removed existing nozzle Serial No N97498-33-0055 from the relief valve.
   3) Installed replacement (modified) nozzle Serial No N97498-54-0169 in the relief valve.
   4) Removed and reinstalled existing disc insert in the relief valve.
   5) Reassembled the relief valve.
   6) Installed two (2) Heli-Coil inserts in inlet hole locations # 4 and 9.
   7) Installed four (4) replacement studs for the relief valve inlet joint. See Note 2.
   8) Tested the relief valve to verify set pressure of 1175 PSIG. Test results acceptable.
   9) Performed VT-2 visual examination during pressure test to confirm pressure boundary integrity of the body to bonnet joint. No evidence of leakage during the pressure test.

NOTES -

1 The applicable ASME Code Cases, if any are listed on the ASME Code Data Reports.
2) Energy Northwest performed VT-1 visual examination on four (4) replacement studs for the relief valve inlet joint. VT-1 visual examination results acceptable.

PLAN No 2-2227

ENERGY NORTHWEST
People · Vision · Solutions

FORM NIS-2 OWNER'S REPORT FOR REPAIR/REPLACEMENT ACTIVITY (Back)

8 Tests Conducted: Hydrostatic [ ] **Pneumatic** [X] **Nominal Operating Pressure** [ ] **Other** [ ]
Exempt [ ] **Test Pressure:** 10 to 15 Psig **Test Temperature:** 78° F

9. Remarks (Applicable Manufacturer's Data Reports to be attached): See attached NVR-1 Code Data Report "Report Of Repair And Replacement Of Nuclear Pressure Relief Devices" for Main Steam Relief Valve (MSRV), Serial No N63790-03-0049, 2) See attached R-4 Code Data Report "Report Supplementary Sheet (NVR-1)" for Main Steam Relief Valve (MSRV), Serial No N63790-03-0049, 3) See attached NV-1 Code Data Report for Main Steam Relief Valve (MSRV), Serial No N63790-00-0049 (Post Modification Serial No N63790-03-0049).

CERTIFICATE OF COMPLIANCE

I certify that the statements made in this Owner's Report are correct and that this conforms to the requirements of the ASME Code, Section XI.
Type Code Symbol Stamp: Not Applicable
Certificate Of Authorization No.: Not Applicable
Expiration Date: Not Applicable

Prepared By Kuldip Singh - Program Lead Engineer (PLE) ***Signed By*** Kuldip Singh - Program Lead Engineer (PLE)

Date 3/16/09 ***Date*** 3/16/09.

CERTIFICATE OF INSERVICE INSPECTION

I, the undersigned, holding a valid commission issued by the National Board of Boiler and Pressure Vessel Inspectors and the State of Washington ***and employed by*** Hartford Steam Boiler Of Connecticut of Hartford, Connecticut ***have inspected the components described in this Owner's Report during the period*** 7/16/2008 ***to*** 3/26/2009 ***and state to the best of my knowledge and belief, the Owner has performed examinations and taken corrective measures described in this Owner's Report in accordance with the requirements of the ASME Code, Section XI.***
By signing this certificate neither the Inspector nor his employer makes any warranty, expressed or implied, concerning the examinations and corrective measures described in this Owner's Report. Furthermore, neither the Inspector nor his employer shall be liable in any manner for any personal injury or property damage or a loss of any kind arising from or connected with this inspection.

Inspector's Signature ***Commissions*** 13172 WANI
National Board, State, and Endorsements

Date 3/26/2009

PLAN No. 2-2227

FORM NVR-1 REPORT OF REPAIR ☒ REPLACEMENT ☒ OF NUCLEAR PRESSURE RELIEF DEVICES

1. Work performed by: **NWS Technologies, LLC** Purchase Order # 3/16/09, 326692
   131 Venture Boulevard, Spartanburg, SC 29306
2. Work performed for: Energy Northwest - Columbia Generating Station
3/4. Owner - name, address and identification of nuclear power plant: Energy Northwest - Columbia Generating Station, North Power Plant Loop, Richland, WA 99352-0968
5. a: Repaired pressure relief device: Main Steam Safety Relief Valve
   b: Name of manufacturer: Crosby Valve & Gage Co.
   c: Identifying nos.

HB-65-BP-FN	new s/n: **N63790-03-0049**	N/A	steam	6 x 10	1980
(type)	(mfr's S/N)	(NB#)	(service)	(size)	(yr.built)

   d: Construction Code:

ASME Sec. III Div. 1	1971	N/A	N/A	1
(name/section/division)	(edition)	(addenda)	(Code Cases(s))	(Code Class)

6. ASME Code Section XI applicable for inservice inspection: 2001 (edition) 2003 (addenda) N/A (Code Case(s))
7. ASME Code Section XI used for repairs, replacements: 2001 (edition) 2003 (addenda) N/A (Code Case(s))
8. Construction Code used for repairs, replacements: 1971 (edition) N/A (addenda) N/A (Code Case(s))
9. Design responsibilities: N/A
10. Opening pressure: 1175 psig
    Set-pressure adjustment made at: NWS Technologies, LLC using steam
11. Description of work (include name and identifying number of replacement parts): See Form R-4 Report Supplementary Sheet
12. Remarks:

CERTIFICATE OF COMPLIANCE

I, Cesar V. Sierra certify that to the best of my knowledge and belief the statements made in this report are correct and the repair, modification or replacement of the pressure relief devices described above conforms to Section XI of the ASME Code and the National Board Inspection Code "VR" and "NR" rules.
National Board Certificate of Authorization No. **632** to use the "VR" stamp expires April 3, 2009.
National Board Certificate of Authorization No. **81** to use the "NR" stamp expires April 9, 2009.

2/25/09	**NWS Technologies, LLC**	Cesar Sierra	Manager, QA
Date	Repair Organization	Authorized representative	Title

CERTIFICATE OF INSPECTION

I, **Charles F. Toegel Jr.** holding a valid commission issued by The National Board of Boiler and Pressure Vessel Inspectors and certificate of competency issued by the jurisdiction of **North Carolina** and employed by **Hartford Steam Boiler of CT** of Hartford, CT have inspected the repair, modification or replacement described in this report on 16 FEB 2009 and state that to the best of my knowledge and belief, this repair, modification or replacement has been completed in accordance with Section XI of the of the ASME Code and the National Board Inspection Code "VR" and "NR" rules.
By signing this certificate, neither the undersigned nor my employer makes any warranty, expressed or implied, concerning this repair, modification or replacement described in this report. Furthermore, neither the undersigned nor my employer shall be liable in any manner for any personal injury, property damage or loss of any kind arising from or connected with this inspection.

2/16/09	Charles F. Toegel Jr.	**NB # 8462, A, N, I NC# 1073**
Date	Inspector's Signature	Commissions (NB (incl endorsements), jurisdiction,& no.)

FORM R-4 REPORT SUPPLEMENTARY SHEET (NVR-1)

In accordance with provisions of the National Board Inspection Code

1. Work performed by: **NWS Technologies, LLC** Valve S/N: **N63790-03-0049**
   131 Venture Boulevard, Spartanburg, SC 29306

2. Owner: Energy Northwest - Columbia Generating Station

3. Location of installation Energy Northwest - Columbia Generating Station
   North Power Plant Loop, Richland, WA 99352-0968

Purchase Order # 326692

Reference Line No.

Continued from Form NVR-1 for Valve S/N N63790-03-0046

11. NWS Traveler # 08-154
The valve was disassembled.

Parts replaced during the repair include:
Nozzle: New S/N N97498-54-0169
Eductor Gasket: MC 56230461
Four Inlet Studs, Cat ID 54400514, Marked: F973
One disc holder pin: MC 54407794
Two inlet hole heli-coils were installed: Cat ID 18379 Heat Code US-88M9

After reassembly, the valve set-pressure was certified using steam as the lift medium.
The valve was then jacked and lapped to restore seat integrity.
A final steam seat tightness test was then done at 93% of set-pressure.

Date 2/15/09 Signed _____ (authorized representative) Name: Cesar V. Sierra (authorized representative)

Date 2/16/09 Signed _____ (inspector) Commissions: **NB# 8462, A,N,I NC# 1073** (National Board and jurisdiction no.)

PLAN NO. 2-2227

Philip Singh
3/16/07.

CROSBY CROSBY VALVE & GAGE COMPANY
WRENTHAM, MASS

FORM NV-1 FOR SAFETY AND SAFETY RELIEF VALVES Q.C.-44D
As Required by the Provisions of the ASME Code Rules

DATA REPORT
Safety and Safety Relief Valves

1. Manufactured By Crosby Valve & Gage Company, 43 Kendrick St., Wrentham, MA 02093
Name and Address

Model No. HB-65-BF-FN Order No. N94275 Contract Date 4/24/79 National Board No. N/A

2. Manufactured For General Electric Company, 175 Curtner Ave., San Jose, CA 95125 Order No. 205-AJ986
Name and Address

3. Owner Washington Public Power Supply System, Richland, Washington 99352
Name and Address

4. Location of Plant Hanford Reservation, Richland, Washington 99352

5. Valve Identification MPL #822-F013 Serial No. N63790-00-0049 Drawing No. DS-A-63790 Rev. C

Type Safety Relief (Safety, Safety Relief, Pilot, Power Actuated) Orifice Size R inch Pipe Size -- inch Inlet 6 inch Outlet 10 inch

6. Set Pressure (psig) 1175 575° F Rated Temperature

Stamped Capacity 884,314 # 3 %Overpressure -- Blowdown (psig) 2% to 11%

Hydrostatic Test (psig) Inlet 2370 Outlet 975 psig (Assembled Valve) 1100 psig (Body Only)
(Applicable to Valves for Closed Systems Only)

Pressure Retaining Pieces

	Serial No. Identification	Material Specification Including Type or Grade
a. Bar Stock & Forgings		
Body	N93183-35-0068	ASTM A105-71 Gr. II ASME SA105 Gr. II
Bonnet	N93407-35-0031	ASTM A105-71 Gr. II ASME SA105 Gr. II
b.		
Disc Insert	N93185-34-0081	ASME SA637 Gr. 7
Nozzle	N93184-33-0053	ASME SA182 Gr. F3
Disc Holder *K5548--35-0095	*N89714-34-0127	AMS 5662B
Spring Washers K62858-35-0031	K62856-35-0087 K62857-35-0052	ASTM A105-71 Gr. II ASME SA105 Gr. II
Adjusting Bolt	N93410-33-0056	ASME SA193 Gr. B6
Spindle Point K62873-35-0049	*N89720-34-0092	ASTM A564-71 Type 630 ASME SA564 Type 630
c. Spring K62858-35-0031	*N89722-0005	ASTM A304-66 Gr. 4161H
d. Bolting		
e. Spindle Ball K62873-35-0049	N93213-0049	Stellite #6
Thrust Bearing Adapter	N93409-32-0052	ASME SA193 Gr. B6
Bonnet Stud (BW5, 117)	N93207-0585 thru 0596	ASTM A194-71 Gr. B7 ASME SA193 Gr. B7
Bonnet Stud Nut (JB7)	N93210-0805 thru 0816	ASME SA194 Gr. 2H
Inlet Stud (BW6)	N93216-0587 thru 0598	ASTM A194-71 Gr. B7 ASME SA193 Gr. B7
Inlet Stud Nut (BW8)	N93218-0591 thru 0602	ASTM A194-71 Gr. 2H ASME SA194 Gr. 2H
Adjusting Bolt Button K63618-33-0057	N93411-33-0057	ASME SA193 Gr. B6

MAB 1-

2

FOR INFORMATION ONLY

ZX00380986

S/N N6 3790-00-004
Crosby Corp
3/1/85

Valve originally built against Crosby Order No. N103600, Assembly No. N56000. Valve modification consists of replacement of the Disc Insert, Nozzle, Bonnet Stud Nuts, Adjusting Bolt, and Thrust Bearing Adapter, remachining of the Body, Spring Washers, Bonnet, and Spindle Assembly, and adding an Adjusting Bolt Button Assembly. New Serialization is required unless indicated by an asterisk.
Original nameplate removed and new nameplate attached.

CERTIFICATE OF COMPLIANCE

We certify that the statements made in this report are correct and that this valve conforms to the rules of construction of the ASME Code for Nuclear Power Plant Components, Section III, Div. 1, 1971 Edition, Addenda No Addenda, Code Case No. 1567 & 1711.
Class 1 (Date)

Date 11-5-80 Signed Crosby Valve & Gage Co. by R. A. Bennett
(N Certificate Holder)

Our ASME Certificate of Authorization No. 1878 to use the NV symbol expires September 30, 1983.
(Date)

CERTIFICATION OF DESIGN

Design information on file at Crosby Valve & Gage Company
Stress analysis report (Class 1 only) on file at Crosby Valve & Gage Company
43 Kendrick Street, Wrentham, Massachusetts 02093

Design specifications certified by[1] Boyd P. Brooke
PE State California Reg. No. 13655
Stress report certified by[1] W.D. Greenlaw
PE State Massachusetts Reg. No. 14784

[1]Signature not required - list name only.

CERTIFICATE OF SHOP INSPECTION

I, the undersigned, holding a valid commission issued by the National Board of Boiler and Pressure Vessel Inspectors and the State or Province of Massachusetts and employed by Factory Mutual Systems* of Norwood, Massachusetts have inspected the pump, or valve, described in this Data Report on 12/5, 1980 and state that to the best of my knowledge and belief, the N Certificate Holder has constructed this pump, or valve, in accordance with the ASME Code for Nuclear Power Plant Components.

By signing this certificate, neither the Inspector nor his employer makes any warrant, expressed or implied, concerning the equipment described in this Data Report. Furthermore, neither the Inspector nor his employer shall be liable in any manner for any personal injury or property damage or a loss of any kind arising from or connected with this inspection.

Date 12/5, 1980.
Signed John E. Morris (Inspector) Commissions MASS 1266 (Nat'l. Bd., State, Prov. and No.)

*Arkwright-Boston Manufacturers Mutual Insurance Company - Mutual Boiler & Machinery Div.

MAB 1-26-81

3 4 5 6
7 8 9 10
11

ZX00380987

PLAN No 2-2228

ENERGY NORTHWEST
People · Vision · Solutions

FORM NIS-2 OWNER'S REPORT FOR REPAIR/REPLACEMENT ACTIVITY
As Required By The Provisions Of The ASME Code Section XI

Date: 03/16/2009
Sheet: 1 Of 1
Unit: Not Applicable

1. **Owner:** Energy Northwest
   Address: Columbia Generating Station, North Power Plant Loop, Richland, Washington, 99352
2. **Plant:** Columbia Generating Station
   Address: Columbia Generating Station, North Power Plant Loop, Richland, Washington, 99352
3. **(a) Work Performed By:** NWS Technologies, LLC, 131 Venture Boulevard, Spartanburg, SC 29306
   (b) Repair/Replacement Organization P.O. No, Job No, etc.: PO No 326692
   (c) Type Code Symbol Stamp: NWS Technologies, LLC, VR And NR
   (d) Certificate Of Authorization No.: NWS Technologies, LLC, VR No 632 And NR No 81
   (e) Expiration Date: NWS Technologies, LLC, VR - April 03, 2009 And NR - April 09, 2009
4. **Identification Of System:** Main Steam (MS) System
5. **(a) Applicable Construction Code:** ASME Section III, Code Class 1, 1971 Edition with no Addenda, Code Case: See Note 1
   (b) Applicable Edition Of ASME Section XI Used For Repair/Replacement Activity: 2001 Edition with 2003 Addenda
   (c) Applicable ASME Section XI Case(s): None
6. **Identification Of Components**

Name Of Component	Name Of Manufacturer	Manufacturer's Serial No	National Board No	Other I.D.	Year Built	Corrected, Removed Or Installed	ASME Code Stamped (Yes Or No) Code Class
Spare Valve	Crosby	N63790-03-0053	N/A	N/A	1980	See Item 7 Below	Yes, Code Class 1

7. **Description Of Work Performed:** Spare Main Steam Relief Valve (MSRV), Serial No N63790-03-0053 was refurbished by NWS Technologies, LLC, 131 Venture Boulevard, Spartanburg, SC 29306. The work was performed in accordance with NWS Technologies, LLC VR and NR programs as follows:
   1) Disassembled the relief valve to perform the required work.
   2) Removed and reinstalled existing disc insert in the relief valve.
   3) Removed and reinstalled existing nozzle in the relief valve.
   4) Reassembled the relief valve.
   5) Installed three (3) Heli-Coil inserts in inlet hole locations # 1, #6 and #11.
   6) Installed one (1) Heli-Coil insert in outlet hole location # 9.
   7) Installed nine (9) replacement studs for the relief valve inlet joint. See Note 2.
   8) Tested the relief valve to verify set pressure of 1185 PSIG. Test results acceptable.
   9) Performed VT-2 visual examination during pressure test to confirm pressure boundary integrity of the body to bonnet joint. No evidence of leakage during the pressure test.

NOTES

1 The applicable ASME Code Cases, if any are listed on the ASME Code Data Reports.
2) Energy Northwest performed VT-1 visual examination on nine (9) replacement studs for the relief valve inlet joint. VT-1 visual examination results acceptable.

PLAN No 2-2228

ENERGY NORTHWEST
People · Vision · Solutions

FORM NIS-2 OWNER'S REPORT FOR REPAIR/REPLACEMENT ACTIVITY (Back)

8 Tests Conducted: Hydrostatic [ ] **Pneumatic** [X] **Nominal Operating Pressure** [ ] **Other** [ ]
Exempt [ ] **Test Pressure:** 10 to 15 Psig **Test Temperature:** 78° F

9. Remarks (Applicable Manufacturer's Data Reports to be attached): See attached NVR-1 Code Data Report "Report Of Repair And Replacement Of Nuclear Pressure Relief Devices" for Main Steam Relief Valve (MSRV), Serial No N63790-03-0053, 2) See attached R-4 Code Data Report "Report Supplementary Sheet (NVR-1)" for Main Steam Relief Valve (MSRV), Serial No N63790-03-0053, 3) See attached NV-1 Code Data Report for Main Steam Relief Valve (MSRV), Serial No N63790-00-0053 (Post Modification Serial No N63790-03-0053).

CERTIFICATE OF COMPLIANCE

I certify that the statements made in this Owner's Report are correct and that this conforms to the requirements of the ASME Code, Section XI.
Type Code Symbol Stamp: Not Applicable
Certificate Of Authorization No.: Not Applicable
Expiration Date: Not Applicable

Prepared By Kuldip Singh — Kuldip Singh - Program Lead Engineer (PLE)
Date 3/16/09

Signed By Kuldip Singh — Kuldip Singh - Program Lead Engineer (PLE)
Date 3/16/09.

CERTIFICATE OF INSERVICE INSPECTION

I, the undersigned, holding a valid commission issued by the National Board of Boiler and Pressure Vessel Inspectors and the State of Washington ***and employed by*** Hartford Steam Boiler Of Connecticut of Hartford, Connecticut ***have inspected the components described in this Owner's Report during the period*** 7/16/2008 ***to*** 3/27/2009 ***and state to the best of my knowledge and belief, the Owner has performed examinations and taken corrective measures described in this Owner's Report in accordance with the requirements of the ASME Code, Section XI.***
By signing this certificate neither the Inspector nor his employer makes any warranty, expressed or implied, concerning the examinations and corrective measures described in this Owner's Report. Furthermore, neither the Inspector nor his employer shall be liable in any manner for any personal injury or property damage or a loss of any kind arising from or connected with this inspection.

Inspector's Signature

Commissions 13172 WANI
National Board, State, and Endorsements

Date 3/27/2009

FORM NVR-1 REPORT OF REPAIR ☒ REPLACEMENT ☒ Corrected
OF NUCLEAR PRESSURE RELIEF DEVICES

1. Work performed by: **NWS Technologies, LLC** Purchase Order # 326692
131 Venture Boulevard, Spartanburg, SC 29306

2. Work performed for: Energy Northwest - Columbia Generating Station

3/4. Owner - name, address and identification of nuclear power plant: Energy Northwest - Columbia Generating Station, North Power Plant Loop, Richland, WA 99352-0968

5. a: Repaired pressure relief device: Main Steam Safety Relief Valve
b: Name of manufacturer: Crosby Valve & Gage Co.
c: Identifying nos.

HB-65-BP-FN	new s/n: N63790-03-0053	N/A	steam	6 x 10	1980
(type)	(mfr's S/N)	(NB#)	(service)	(size)	(yr.built)

d: Construction Code:

ASME Sec. III Div. 1	1971	N/A	N/A	1
(name/section/division)	(edition)	(addenda)	(Code Cases(s))	(Code Class)

	(edition)	(addenda)	(Code Case(s))
6. ASME Code Section XI applicable for inservice inspection:	2001	2003	N/A
7. ASME Code Section XI used for repairs, replacements:	2001	2003	N/A
8. Construction Code used for repairs, replacements:	1971	N/A	N/A

9. Design responsibilities: N/A

10. Opening pressure: 1185 psig
Set-pressure adjustment made at: NWS Technologies, LLC using steam

11. Description of work (include name and identifying number of replacement parts): See Form R-4 Report Supplementary Sheet

12. Remarks: See attached Form R-4: Corrected Bellows Assembly Heat Number.

CERTIFICATE OF COMPLIANCE

I, Cesar V. Sierra certify that to the best of my knowledge and belief the statements made in this report are correct and the repair, modification or replacement of the pressure relief devices described above conforms to Section XI of the ASME Code and the National Board Inspection Code "VR" and "NR" rules.
National Board Certificate of Authorization No. **632** to use the "VR" stamp expires April 3, 2009.
National Board Certificate of Authorization No. **81** to use the "NR" stamp expires April 9, 2009.

3/19/09	**NWS Technologies, LLC**	Cesar Sierra	Manager, QA
Date	Repair Organization	Authorized representative	Title

CERTIFICATE OF INSPECTION

I, **Charles F. Toegel Jr.** holding a valid commission issued by The National Board of Boiler and Pressure Vessel Inspectors and certificate of competency issued by the jurisdiction of **North Carolina** and employed by **Hartford Steam Boiler of CT** of Hartford, CT have inspected the repair, modification or replacement described in this report on 19 MAR 2009 and state that to the best of my knowledge and belief, this repair, modification or replacement has been completed in accordance with Section XI of the of the ASME Code and the National Board Inspection Code "VR" and "NR" rules.
By signing this certificate, neither the undersigned nor my employer makes any warranty, expressed or implied, concerning this repair, modification or replacement described in this report. Furthermore, neither the undersigned nor my employer shall be liable in any manner for any personal injury, property damage or loss of any kind arising from or connected with this inspection.

3/19/09	Charles F. Toegel Jr.	**NB # 8462, A, N, I NC# 1073**
Date	Inspector's Signature	Commissions (NB (incl endorsements), jurisdiction,& no.)

FORM R-4 REPORT SUPPLEMENTARY SHEET (NVR-1) **Corrected**

in accordance with provisions of the National Board Inspection Code

1. Work performed by: **NWS Technologies, LLC** Valve S/N: **N63790-03-0053**
   131 Venture Boulevard, Spartanburg, SC 29306

2. Owner: Energy Northwest - Columbia Generating Station

3. Location of installation Energy Northwest - Columbia Generating Station
   North Power Plant Loop, Richland, WA 99352-0968

Purchase Order # 326692

Reference Line No.

Continued from Form NVR-1 for Valve S/N N63790-03-0053

11. NWS Traveler # 08-155
The valve was disassembled.

Parts replaced during the repair include:
Eductor Gasket: MC 56230461
Spindle: K82137-43-0045
Disc Holder / Bellows assembly: HT K55484-47-0257 MC 54400150
Nine Inlet Studs: Cat ID 54400514 Heat Code F973
Three inlet flange Heli-Coil: Part No: 4190-22CN2062 Ht # US-88M9
One outlet flange Heli-Coil: MC 25003083 Ht # HT-US-81B4

After reassembly, the valve set-pressure was certified using steam as the lift medium.
The valve was then jacked and lapped to restore seat integrity.
A final steam seat tightness test was then done at 93% of set-pressure.

Date 3/19/09 Signed (authorized representative) Name: Cesar V. Sierra (authorized representative)

Date 3/19/09 Signed (inspector) Commissions: **NB# 8462, A,N,I NC# 1073** (National Board and jurisdiction no.)

PLAN No. 2-2228

CROSBY

CROSBY VALVE & GAGE COMPANY
WRENTHAM MASS

Philip Smith

FORM NV-1 FOR SAFETY AND SAFETY RELIEF VALVES 3/16/09. Q.C.-44D
As Required by the Provisions of the ASME Code Rules

FOR INFORMATION ONLY

DATA REPORT
Safety and Safety Relief Valves

1. Manufactured By Crosby Valve & Gage Company, 43 Kendrick St., Wrentham, MA 02093
Name and Address

Model No. HB-65-BP-FN Order No. N94275 Contract Date 4/24/79 National Board No. N/A

2. Manufactured For General Electric Company, 175 Curtner Ave., San Jose, CA 95125 Order No. 205-AJ986
Name and Address

3. Owner Washington Public Supply System, Richland, Washington 99352
Name and Address

4. Location of Plant Hanford Reservation, Richland, Washington 99352

5. Valve Identification MPL #B22-F013 Serial No. N63790-00-0053 Drawing No. DS-A-63790 Rev. C

Type Safety Relief (Safety, Safety Relief, Pilot, Power Actuated) Orifice Size R Inch Pipe Size -- Inch Inlet 6 Inch Outlet 10 Inch

6. Set Pressure (psig) 1185 575° F
Rated Temperature

Stamped Capacity 891,750 @ 3 %Overpressure -- Blowdown (psig) 2% to 11%

Hydrostatic Test (psig) Inlet 2370 Outlet 975 psig (Assembled Valve) 1100 psig (Body Only)
(Applicable to Valves for Closed Systems Only)

Pressure Retaining Pieces

	Serial No. Identification	Material Specification Including Type or Grade
a. Bar Stock & Forgings		
Body	N93183-35-0072	ASTM A105-71 Gr. II ASME SA105 Gr. II
Bonnet	N93407-35-0035	ASTM A105-71 Gr. II ASME SA105 Gr. II
b.		
Disc Insert	N93185-34-0085	ASME SA637 Gr. 718
Nozzle	N93184-33-0057	ASME SA182 Gr. F316
Disc Holder *K55484-35-0082	*N89714-34-0089	AMS 5662B
Spring Washers K62858-35-0035	K62856-35-0091 K62857-35-0056	ASTM A105-71 Gr. II ASME SA105 Gr. II
Adjusting Bolt	N93410-33-0060	ASME SA193 Gr. B6
Spindle Point K62873-35-0053	*N89720-34-0085	ASTM A564-71 Type 630 ASME SA564 Type 630
c. Spring K62858-35-0035	*N89722-0011	ASTM A304-66 Gr. 4161H
d. Bolting		ZX00380127
e. Spindle Ball K62873-35-0053	N93213-0053	Stellite #6
Thrust Bearing Adapter	N93409-32-0055	ASME SA193 Gr. B6
Bonnet Stud (I17, BW5)	N93207-0633 thru 0644	ASTM A193-71 Gr. B7 ASME SA193 Gr. B7
Bonnet Stud Nut (J87)	N93210-0853 thru 0864	ASME SA194 Gr. 2H
Inlet Stud (BW6)	N93216-0635 thru 0646	ASTM A193-71 Gr. B7 ASME SA193 Gr. B7
Inlet Stud Nut (BW8)	N93218-0639 thru 0650	ASTM A194-71 Gr. 2H ASME SA194 Gr. 2H
Adjusting Bolt Button K63618-33-0062	N93411-33-0062	ASME SA193 Gr. B6

Valve originally built against Crosby Order No. N103600, Assembly No. N56000. Valve modification consists of replacement of the Disc Insert, Nozzle, Bonnet Stud Nuts, Adjusting Bolt, and Thrust Bearing Adapter, remachining of the Body, Spring Washers, Bonnet, and Spindle Assembly, and adding an Adjusting Bolt Button Assembly. New serialization is required unless indicated by an asterisk.
Original nameplate removed and new nameplate attached.

N63790-00-0053

CERTIFICATE OF COMPLIANCE

We certify that the statements made in this report are correct and that this valve conforms to the rules of construction of the ASME Code for Nuclear Power Plant Components, Section III, Div. 1, 1971 Edition, Addenda No Addenda (Date), Code Case No. 1567 & 1711.

Class 1

Date 11-5-80 Signed Crosby Valve & Gage Co. (N Certificate Holder) by R. G. Lawrence

Our ASME Certificate of Authorization No. 1878 to use the NV symbol expires September 30, 1983 (Date).

CERTIFICATION OF DESIGN

Design information on file at Crosby Valve & Gage Company

Stress analysis report (Class 1 only) on file at Crosby Valve & Gage Company 43 Kendrick Street, Wrentham, Massachusetts 02093

Design specifications certified by[1] Boyd P. Brooks

PE State California Reg. No. 13655

Stress report certified by[1] W. D. Greenlaw

PE State Massachusetts Reg. No. 14784

[1]Signature not required - list name only.

FOR INFORMATION ONLY

CERTIFICATE OF SHOP INSPECTION

I, the undersigned, holding a valid commission issued by the National Board of Boiler and Pressure Vessel Inspectors and the State or Province of Massachusetts and employed by Factory Mutual Systems* of Norwood, Massachusetts have inspected the pump, or valve, described in this Data Report on 11/21, 1980 and state that to the best of my knowledge and belief, the N Certificate Holder has constructed this pump, or valve, in accordance with the ASME Code for Nuclear Power Plant Components.

By signing this certificate, neither the Inspector nor his employer makes any warrant, expressed or implied, concerning the equipment described in this Data Report. Furthermore, neither the Inspector nor his employer shall be liable in any manner for any personal injury or property damage or a loss of any kind arising from or connected with this inspection.

Date 11/21 1980.

Signed John Burns (Inspector) Commissions MASS 1266 (Nat'l. Bd., State, Prov. and No.)

*Arkwright-Boston Manufacturers Mutual Insurance Company - Mutual Boiler & Machinery Div.

ZX00380128

PLAN No 2-2229

ENERGY NORTHWEST
People · Vision · Solutions

FORM NIS-2 OWNER'S REPORT FOR REPAIR/REPLACEMENT ACTIVITY
As Required By The Provisions Of The ASME Code Section XI

1. Owner: Energy Northwest
Address: Columbia Generating Station, North Power Plant Loop, Richland, Washington, 99352
2. Plant: Columbia Generating Station
Address: Columbia Generating Station, North Power Plant Loop, Richland, Washington, 99352

Date: 03/16/2009
Sheet: 1 Of 1
Unit: Not Applicable

3. (a) Work Performed By: NWS Technologies, LLC, 131 Venture Boulevard, Spartanburg, SC 29306
(b) Repair/Replacement Organization P.O. No, Job No, etc.: PO No 326692
(c) Type Code Symbol Stamp: NWS Technologies, LLC, VR And NR
(d) Certificate Of Authorization No.: NWS Technologies, LLC, VR No 632 And NR No 81
(e) Expiration Date: NWS Technologies, LLC, VR - April 03, 2009 And NR - April 09, 2009
4. Identification Of System: Main Steam (MS) System
5. (a) Applicable Construction Code: ASME Section III, Code Class 1, 1971 Edition with no Addenda, Code Case: See Note 1
(b) Applicable Edition Of ASME Section XI Used For Repair/Replacement Activity: 2001 Edition with 2003 Addenda
(c) Applicable ASME Section XI Case(s): None
6. Identification Of Components

Name Of Component	Name Of Manufacturer	Manufacturer's Serial No	National Board No	Other I.D.	Year Built	Corrected, Removed Or Installed	ASME Code Stamped (Yes Or No) Code Class
Spare Valve	Crosby	N63790-03-0059	N/A	N/A	1980	See Item 7 Below	Yes, Code Class 1
Nozzle	Crosby	N97498-33-0062	N/A	N/A	N/A	Removed	No, Code Class 1
Nozzle	Crosby	N97498-52-0163	N/A	N/A	N/A	Installed	No, Code Class 1

7. Description Of Work Performed: Spare Main Steam Relief Valve (MSRV), Serial No N63790-03-0059 was refurbished by NWS Technologies, LLC, 131 Venture Boulevard, Spartanburg, SC 29306. The work was performed in accordance with NWS Technologies, LLC VR and NR programs as follows:

1) Disassembled the relief valve to perform the required work.
2) Removed existing nozzle Serial No N97498-33-0062 from the relief valve.
3) Installed replacement (modified) nozzle Serial No N97498-52-0163 in the relief valve.
4) Removed and reinstalled existing disc insert in the relief valve.
5) Reassembled the relief valve.
6) Installed one (1) Heli-Coil insert in inlet hole location # 3.
8) Tested the relief valve to verify set pressure of 1205 PSIG. Test results acceptable.
9) Performed VT-2 visual examination during pressure test to confirm pressure boundary integrity of the body to bonnet joint. No evidence of leakage during the pressure test.

NOTES

1 The applicable ASME Code Cases, if any are listed on the ASME Code Data Reports.
2) Energy Northwest performed VT-1 visual examination on six (6) replacement studs for the relief valve inlet joint. VT-1 visual examination results acceptable.

PLAN No 2-2229

ENERGY NORTHWEST
People · Vision · Solutions

FORM NIS-2 OWNER'S REPORT FOR REPAIR/REPLACEMENT ACTIVITY (Back)

8 Tests Conducted: Hydrostatic [ ] **Pneumatic** [X] **Nominal Operating Pressure** [ ] **Other** [ ]
Exempt [ ] **Test Pressure:** 10 to 15 Psig **Test Temperature:** 78° F

9. Remarks (Applicable Manufacturer's Data Reports to be attached): See attached NVR-1 Code Data Report "Report Of Repair And Replacement Of Nuclear Pressure Relief Devices" for Main Steam Relief Valve (MSRV), Serial No N63790-03-0059, 2) See attached R-4 Code Data Report "Report Supplementary Sheet (NVR-1)" for Main Steam Relief Valve (MSRV), Serial No N63790-03-0059, 3) See attached NV-1 Code Data Report for Main Steam Relief Valve (MSRV), Serial No N63790-00-0059 (Post Modification Serial No N63790-03-0059).

CERTIFICATE OF COMPLIANCE

I certify that the statements made in this Owner's Report are correct and that this conforms to the requirements of the ASME Code, Section XI.
Type Code Symbol Stamp: Not Applicable
Certificate Of Authorization No.: Not Applicable
Expiration Date: Not Applicable

Prepared By Kuldip Singh - Program Lead Engineer (PLE) ***Signed By*** Kuldip Singh - Program Lead Engineer (PLE)

Date 3/16/09 ***Date*** 3/16/09

CERTIFICATE OF INSERVICE INSPECTION

I, the undersigned, holding a valid commission issued by the National Board of Boiler and Pressure Vessel Inspectors and the State of Washington ***and employed by*** Hartford Steam Boiler Of Connecticut of Hartford, Connecticut ***have inspected the components described in this Owner's Report during the period*** 7/16/2008 ***to*** 3/27/2009 ***and state to the best of my knowledge and belief, the Owner has performed examinations and taken corrective measures described in this Owner's Report in accordance with the requirements of the ASME Code, Section XI.***
By signing this certificate neither the Inspector nor his employer makes any warranty, expressed or implied, concerning the examinations and corrective measures described in this Owner's Report. Furthermore, neither the Inspector nor his employer shall be liable in any manner for any personal injury or property damage or a loss of any kind arising from or connected with this inspection.

Inspector's Signature ***Commissions*** 13172 WANI
National Board, State, and Endorsements

Date 3/27/2009

PLAN NO. 2-2225

FORM NVR-1 REPORT OF REPAIR ☒ REPLACEMENT ☒ OF NUCLEAR PRESSURE RELIEF DEVICES

1. Work performed by: **NWS Technologies, LLC** Purchase Order # 3/16/09 326692
131 Venture Boulevard, Spartanburg, SC 29306

2. Work performed for: Energy Northwest - Columbia Generating Station

3/4. Owner - name, address and identification of nuclear power plant: Energy Northwest - Columbia Generating Station, North Power Plant Loop, Richland, WA 99352-0968

5. a: Repaired pressure relief device: Main Steam Safety Relief Valve
b: Name of manufacturer: Crosby Valve & Gage Co.
c: Identifying nos.

HB-65-BP-FN	new s/n: **N63790-03-0059**	N/A	steam	6 x 10	1980
(type)	(mfr's S/N)	(NB#)	(service)	(size)	(yr.built)

d: Construction Code:

ASME Sec. III Div. 1	1971	N/A	N/A	1
(name/section/division)	(edition)	(addenda)	(Code Cases(s))	(Code Class)

6. ASME Code Section XI applicable for inservice inspection:

2001	2003	N/A
(edition)	(addenda)	(Code Case(s))

7. ASME Code Section XI used for repairs, replacements:

2001	2003	N/A
(edition)	(addenda)	(Code Case(s))

8. Construction Code used for repairs, replacements:

1971	N/A	N/A
(edition)	(addenda)	(Code Case(s))

9. Design responsibilities: N/A

10. Opening pressure: 1205 psig
Set-pressure adjustment made at: NWS Technologies, LLC using steam

11. Description of work (include name and identifying number of replacement parts): See Form R-4 Report Supplementary Sheet

12. Remarks:

CERTIFICATE OF COMPLIANCE

I, Cesar V. Sierra certify that to the best of my knowledge and belief the statements made in this report are correct and the repair, modification or replacement of the pressure relief devices described above conforms to Section XI of the ASME Code and the National Board Inspection Code "VR" and "NR" rules.
National Board Certificate of Authorization No. **632** to use the "VR" stamp expires April 3, 2009.
National Board Certificate of Authorization No. **81** to use the "NR" stamp expires April 9, 2009.

2/24/09	**NWS Technologies, LLC**		Manager, QA
Date	Repair Organization	Authorized representative	Title

CERTIFICATE OF INSPECTION

I, **Charles F. Toegel Jr.** holding a valid commission issued by The National Board of Boiler and Pressure Vessel Inspectors and certificate of competency issued by the jurisdiction of **North Carolina** and employed by **Hartford Steam Boiler of CT** of Hartford, CT have inspected the repair, modification or replacement described in this report on 24 FEB 2009 and state that to the best of my knowledge and belief, this repair, modification or replacement has been completed in accordance with Section XI of the of the ASME Code and the National Board Inspection Code "VR" and "NR" rules.
By signing this certificate, neither the undersigned nor my employer makes any warranty, expressed or implied, concerning this repair, modification or replacement described in this report. Furthermore, neither the undersigned nor my employer shall be liable in any manner for any personal injury, property damage or loss of any kind arising from or connected with this inspection.

2/24/09		**NB # 8462, A, N, I NC# 1073**
Date	Inspector's Signature	Commissions (NB (incl endorsements), jurisdiction,& no.)

FORM R-4 REPORT SUPPLEMENTARY SHEET (NVR-1)

In accordance with provisions of the National Board Inspection Code

1. Work performed by: **NWS Technologies, LLC** Valve S/N: **N63790-03-0059**
   131 Venture Boulevard, Spartanburg, SC 29306

2. Owner: Energy Northwest - Columbia Generating Station

3. Location of installation Energy Northwest - Columbia Generating Station
   North Power Plant Loop, Richland, WA 99352-0968

Purchase Order # 326692

Reference Line No.

Continued from Form NVR-1 for Valve S/N N63790-03-0059

11. NWS Traveler # 08-156
The valve was disassembled.

Parts replaced during the repair include:
Eductor Gasket: MC 56230461
Nozzle: S/N N97498-52-0163
Three inlet studs: Cat ID 54400514 Heat Code F973
Two inlet studs: Cat ID 54400514 Heat Code 1V54
One inlet stud: Cat ID 54400514 Heat Code KMY
One inlet flange Heli-Coil: Part No: 4190-22CN2062 Ht # US-88M9
Two disc holder pins: MC54407794 Part No. 082598
Nozzle ring set screw: MC25520005 Ht #4682D

After reassembly, the valve set-pressure was certified using steam as the lift medium.
The valve was then jacked and lapped to restore seat integrity.
A final steam seat tightness test was then done at 93% of set-pressure.

Date 2/24/09 Signed (authorized representative) Name: Cesar V. Sierra (authorized representative)

Date 2/24/09 Signed (inspector) Commissions: **NB# 8462, A,N,I NC# 1073** (National Board and jurisdiction no.)

PLAN No 2-2229

CROSBY

CROSBY VALVE & GAGE COMPANY
WRENTHAM, MASS

Philip Simpb

3/16/09. Q.C.-44D

FORM NV-1 FOR SAFETY AND SAFETY RELIEF VALVES
As Required by the Provisions of the ASME Code Rules

DATA REPORT
Safety and Safety Relief Valves

1. Manufactured By Crosby Valve & Gage Company, 43 Kendrick St., Wrentham, MA 02093
Name and Address

Model No. HB-65-BP-FN Order No. N94275 Contract Date 4/24/79 National Board No. N/A

2. Manufactured For General Electric Company, 175 Curtner Ave., San Jose, CA 95125 Order No. 205-AJ986
Name and Address

3. Owner Washington Public Power Supply System, Richland, Washington 99352
Name and Address

4. Location of Plant Hanford Reservation, Richland, Washington 99352

5. Valve Identification MPL #B22-F013 Serial No. N63790-00-0059 Drawing No. DS-A-63790 Rev. C

Type Safety Relief (Safety, Safety Relief, Pilot, Power Actuated) Orifice Size R Inch Pipe Size -- Inch Inlet 6 Inch Outlet 10 Inch

6. Set Pressure (psig) 1205 575° F
Rated Temperature

Stamped Capacity 906,621 @ 3 %Overpressure -- Blowdown (psig) 2% to 11%

Hydrostatic Test (psig) Inlet 2370 Outlet 975 psig (Assembled Valve) 1100 psig (Body Only)
(Applicable to Valves for Closed Systems Only)

Pressure Retaining Pieces

	Serial No. Identification	Material Specification Including Type or Grade
a. Bar Stock & Forgings		
Body	N93183-35-0078	ASTM A105-71 Gr. II ASME SA105 Gr. II
Bonnet	N93407-35-0041	ASTM A105-71 Gr. II ASME SA105 Gr. II
b. Disc Insert	N93185-34-0091	ASME SA637 Gr. 718
Nozzle	N93184-33-0063	ASME SA182 Gr. F316
Disc Holder *K55484-35-0085	*N89714-34-0105	AMS 5662B
Spring Washers K62858-35-0041	K62856-35-0097 K62857-35-0062	ASTM A105-71 Gr. II ASME SA105 Gr. II
Adjusting Bolt	N93410-33-0066	ASME SA193 Gr. B6
Spindle Point K62873-35-0059	*N89720-34-0067	ASTM A564-71 Type 630 ASME SA564 Type 630
c. Spring K62858-35-0041	*N89722-0017	ASTM A304-66 Gr. 4161H
d. Bolting		
e. Spindle Ball K62873-35-0059	N93213-0059	Stellite #6
Thrust Bearing Adapter	N93409-32-0061	ASME SA193 Gr. B6
Bonnet Stud (BW5)	N93207-0705 thru 0716	ASTM A193-71 Gr. B7 ASME SA193 Gr. B7
Bonnet Stud Nut (J87)	N93210-0925 thru 0936	ASME SA194 Gr. 2H
Inlet Stud (BW6)	N93216-0707 thru 0718	ASTM A193-71 Gr. B7 ASME SA193 Gr. B7
Inlet Stud Nut (BW8)	N93218-0711 thru 0722	ASTM A194-71 Gr. 2H ASME SA194 Gr. 2H
Adjusting Bolt Button	N93411-33-0068	ASME SA193 Gr. B6

7X00380149

Valve originally built against Crosby Order No. N103600, Assembly No. N56000. Valve modification consists of replacement of the Disc Insert, Nozzle, Bonnet Stud Nuts, Adjusting Bolt, and Thrust Bearing Adapter, remachining of the Body, Spring Washers, Bonnet, and Spindle Assembly, and adding an Adjusting Bolt Button Assembly. New Serialization is required unless indicated by an asterisk.
Original nameplate removed and new nameplate attached.

N03790-00-0059

CERTIFICATE OF COMPLIANCE

We certify that the statements made in this report are correct and that this valve conforms to the rules of construction of the ASME Code for Nuclear Power Plant Components, Section III, Div. 1, 1971 Edition, Addenda No Addenda, Code Case No. 1567 & 1711.
(Date)

Class 1

Date 11-5-80 Signed Crosby Valve & Gage Co. by R.A. Cusanovich
(N Certificate Holder)

Our ASME Certificate of Authorization No. 1878 to use the NV symbol expires September 30, 1983.
(Date)

CERTIFICATION OF DESIGN

Design information on file at Crosby Valve & Gage Company

Stress analysis report (Class 1 only) on file at Crosby Valve & Gage Company 43 Kendrick Street, Wrentham, Massachusetts 02093

Design specifications certified by[1] Boyd P. Brooks

PE State California Reg. No. 13655

Stress report certified by[1] W.D. Greenlaw

PE State Massachusetts Reg. No. 14784

[1]Signature not required - list name only.

CERTIFICATE OF SHOP INSPECTION

I, the undersigned, holding a valid commission issued by the National Board of Boiler and Pressure Vessel Inspectors and the State or Province of Massachusetts and employed by Factory Mutual Systems* of Norwood, Massachusetts have inspected the pump, or valve, described in this Data Report on 11/18, 1980 and state that to the best of my knowledge and belief, the N Certificate Holder has constructed this pump, or valve, in accordance with the ASME Code for Nuclear Power Plant Components.

By signing this certificate, neither the Inspector nor his employer makes any warrant, expressed or implied, concerning the equipment described in this Data Report. Furthermore, neither the Inspector nor his employer shall be liable in any manner for any personal injury or property damage or a loss of any kind arising from or connected with this inspection.

Date 11/18 1980.

Signed John E. Mitchell (Inspector) Commissions MASS 1266 (Nat'l. Bd., State, Prov. and No.)

*Arkwright-Boston Manufacturers Mutual Insurance Company - Mutual Boiler & Machinery Div.

ZX00380150

PLAN No 2-2230

ENERGY NORTHWEST
People · Vision · Solutions

FORM NIS-2 OWNER'S REPORT FOR REPAIR/REPLACEMENT ACTIVITY
As Required By The Provisions Of The ASME Code Section XI

Date: 03/16/2009
Sheet: 1 Of 1
Unit: Not Applicable

1. Owner: Energy Northwest
Address: Columbia Generating Station, North Power Plant Loop, Richland, Washington, 99352
2. Plant: Columbia Generating Station
Address: Columbia Generating Station, North Power Plant Loop, Richland, Washington, 99352
3. (a) Work Performed By: NWS Technologies, LLC, 131 Venture Boulevard, Spartanburg, SC 29306
(b) Repair/Replacement Organization P.O. No, Job No, etc.: PO No 313236
(c) Type Code Symbol Stamp: NWS Technologies, LLC, VR And NR
(d) Certificate Of Authorization No.: NWS Technologies, LLC, VR No 632 And NR No 81
(e) Expiration Date: NWS Technologies, LLC, VR - April 03, 2009 And NR - April 09, 2009
4. Identification Of System: Main Steam (MS) System
5. (a) Applicable Construction Code: ASME Section III, Code Class 1, 1971 Edition with no Addenda, Code Case: See Note 1
(b) Applicable Edition Of ASME Section XI Used For Repair/Replacement Activity: 2001 Edition with 2003 Addenda
(c) Applicable ASME Section XI Case(s): None
6. Identification Of Components

Name Of Component	Name Of Manufacturer	Manufacturer's Serial No	National Board No	Other I.D.	Year Built	Corrected, Removed Or Installed	ASME Code Stamped (Yes Or No) Code Class
Spare Valve	Crosby	N63790-03-0062	N/A	N/A	1980	See Item 7 Below	Yes, Code Class 1
Disc Insert	Crosby	N93185-49-0189	N/A	N/A	N/A	Removed	No, Code Class 1
Disc Insert	Crosby	N97499-46-0119	N/A	N/A	N/A	Installed	No, Code Class 1
Nozzle	Crosby	N93184-42-0179	N/A	N/A	N/A	Removed	No, Code Class 1
Nozzle	Crosby	N97498-33-0015	N/A	N/A	N/A	Installed	No, Code Class 1

7. Description Of Work Performed: Spare Main Steam Relief Valve (MSRV), Serial No N63790-03-0062 was refurbished by NWS Technologies, LLC, 131 Venture Boulevard, Spartanburg, SC 29306. The work was performed in accordance with NWS Technologies, LLC VR and NR programs as follows:

1) Disassembled the relief valve to perform the required work.
2) Removed existing disc insert Serial No N93185-49-0189 from the relief valve.
3) Installed replacement (modified) disc insert Serial No N97499-46-0119 in the relief valve.
4) Removed existing nozzle Serial No N93184-42-0179 from the relief valve.
5) Installed replacement (modified) nozzle Serial No N97498-33-0015 in the relief valve.
6) Reassembled the relief valve.
7) Installed one (1) replacement stud for the relief valve inlet joint. See Note 2.
8) Tested the relief valve to verify set pressure of 1205 PSIG. Test results acceptable.
9) Performed VT-2 visual examination during pressure test to confirm pressure boundary integrity of the body to bonnet joint. No evidence of leakage during the pressure test.

NOTES

1 The applicable ASME Code Cases, if any are listed on the ASME Code Data Reports.
2) Energy Northwest performed VT-1 visual examination on one (1) replacement stud for the relief valve inlet joint. VT-1 visual examination results acceptable.

PLAN No 2-2230

ENERGY NORTHWEST
People · Vision · Solutions

FORM NIS-2 OWNER'S REPORT FOR REPAIR/REPLACEMENT ACTIVITY (Back)

8 Tests Conducted: Hydrostatic [ ] **Pneumatic** [X] **Nominal Operating Pressure** [ ] **Other** [ ]
Exempt [ ] **Test Pressure:** 10 to 15 Psig **Test Temperature:** 78° F

9. Remarks (Applicable Manufacturer's Data Reports to be attached): See attached NVR-1 Code Data Report "Report Of Repair And Replacement Of Nuclear Pressure Relief Devices" for Main Steam Relief Valve (MSRV), Serial No N63790-03-0062, 2) See attached R-4 Code Data Report "Report Supplementary Sheet (NVR-1)" for Main Steam Relief Valve (MSRV), Serial No N63790-03-0062, 3) See attached NV-1 Code Data Report for Main Steam Relief Valve (MSRV), Serial No N63790-00-0062 (Post Modification Serial No N63790-03-0062).

CERTIFICATE OF COMPLIANCE

I certify that the statements made in this Owner's Report are correct and that this conforms to the requirements of the ASME Code, Section XI.
Type Code Symbol Stamp: Not Applicable
Certificate Of Authorization No.: Not Applicable
Expiration Date: Not Applicable

Prepared By Kuldip Singh ***Signed By*** Kuldip Singh
Kuldip Singh - Program Lead Engineer (PLE) Kuldip Singh - Program Lead Engineer (PLE)
Date 3/16/09 ***Date*** 3/16/09.

CERTIFICATE OF INSERVICE INSPECTION

I, the undersigned, holding a valid commission issued by the National Board of Boiler and Pressure Vessel Inspectors and the State of Washington ***and employed by*** Hartford Steam Boiler Of Connecticut of Hartford, Connecticut ***have inspected the components described in this Owner's Report during the period*** 7/18/2008 ***to*** 3/27/2009 ***and state to the best of my knowledge and belief, the Owner has performed examinations and taken corrective measures described in this Owner's Report in accordance with the requirements of the ASME Code, Section XI.***
By signing this certificate neither the Inspector nor his employer makes any warranty, expressed or implied, concerning the examinations and corrective measures described in this Owner's Report. Furthermore, neither the Inspector nor his employer shall be liable in any manner for any personal injury or property damage or a loss of any kind arising from or connected with this inspection.

Inspector's Signature ***Commissions*** 13172 WANI
National Board, State, and Endorsements

Date 3/27/2009

PLAN NO. 2-2230

FORM NVR-1 REPORT OF REPAIR ☒ REPLACEMENT ☒ OF NUCLEAR PRESSURE RELIEF DEVICES

1. Work performed by: **NWS Technologies, LLC** Purchase Order # 3/16/09 313236
131 Venture Boulevard, Spartanburg, SC 29306

2. Work performed for: Energy Northwest - Columbia Generating Station

3/4. Owner - name, address and identification of nuclear power plant: Energy Northwest - Columbia Generating Station, North Power Plant Loop, Richland, WA 99352-0968

5. a: Repaired pressure relief device: Main Steam Safety Relief Valve
b: Name of manufacturer: Crosby Valve & Gage Co.
c: Identifying nos.

HB-65-BP-FN	new s/n: **N63790-03-0062**	N/A	steam	6 x 10	1980
(type)	(mfr's S/N)	(NB#)	(service)	(size)	(yr.built)

d: Construction Code:

ASME Sec. III Div. 1	1971	N/A	N/A	1
(name/section/division)	(edition)	(addenda)	(Code Cases(s))	(Code Class)

6. ASME Code Section XI applicable for inservice inspection: 2001 (edition) 2003 (addenda) N/A (Code Case(s))

7. ASME Code Section XI used for repairs, replacements: 2001 (edition) 2003 (addenda) N/A (Code Case(s))

8. Construction Code used for repairs, replacements: 1971 (edition) N/A (addenda) N/A (Code Case(s))

9. Design responsibilities: N/A

10. Opening pressure: 1205 psig
Set-pressure adjustment made at: NWS Technologies, LLC using steam

11. Description of work (include name and identifying number of replacement parts): See Form R-4 Report Supplementary Sheet

12. Remarks:

CERTIFICATE OF COMPLIANCE

I, Cesar V. Sierra certify that to the best of my knowledge and belief the statements made in this report are correct and the repair, modification or replacement of the pressure relief devices described above conforms to Section XI of the ASME Code and the National Board Inspection Code "VR" and "NR" rules.
National Board Certificate of Authorization No. **632** to use the "VR" stamp expires April 3, 2009.
National Board Certificate of Authorization No. **81** to use the "NR" stamp expires April 9, 2009.

2/24/09	**NWS Technologies, LLC**	Cesar Sierra	Manager, QA
Date	Repair Organization	Authorized representative	Title

CERTIFICATE OF INSPECTION

I, **Charles F. Toegel Jr.** holding a valid commission issued by The National Board of Boiler and Pressure Vessel Inspectors and certificate of competency issued by the jurisdiction of **North Carolina** and employed by **Hartford Steam Boiler of CT** of Hartford, CT have inspected the repair, modification or replacement described in this report on 24 FEB 2009 and state that to the best of my knowledge and belief, this repair, modification or replacement has been completed in accordance with Section XI of the of the ASME Code and the National Board Inspection Code "VR" and "NR" rules.
By signing this certificate, neither the undersigned nor my employer makes any warranty, expressed or implied, concerning this repair, modification or replacement described in this report. Furthermore, neither the undersigned nor my employer shall be liable in any manner for any personal injury, property damage or loss of any kind arising from or connected with this inspection.

2/24/09	Charles F. Toegel Jr.	**NB # 8462, A, N, I NC# 1073**
Date	Inspector's Signature	Commissions (NB (incl endorsements), jurisdiction,& no.)

FORM R-4 REPORT SUPPLEMENTARY SHEET (NVR-1)

In accordance with provisions of the National Board Inspection Code

1. Work performed by: **NWS Technologies, LLC** Valve S/N: **N63790-03-0062**
   131 Venture Boulevard, Spartanburg, SC 29306

2. Owner: Energy Northwest - Columbia Generating Station

3. Location of installation Energy Northwest - Columbia Generating Station
   North Power Plant Loop, Richland, WA 99352-0968

Purchase Order # 313236

Reference Line No.

Continued from Form NVR-1 for Valve S/N N63790-03-0062

11. NWS Traveler # 03-171
The valve was disassembled.

Parts replaced during the repair include:
Disc Insert with pin: S/N N97499-46-0119
Nozzle: S/N N97498-33-0015
Spindle: K82137-39-0020
Bellows/Disc Ring Assembly: K55484-47-0261
Disc Holder Pin: MC 54407794
Nozzle Ring Set Screw: MC 25520243
Eductor Gasket: MC 56230461
Inlet Stud: Cat ID 54400514 Heat Code F973

After reassembly, the valve set-pressure was certified using steam as the lift medium.
The valve was then jacked and lapped to restore seat integrity.
A final steam seat tightness test was then done at 93% of set-pressure.

Date 2/24/09 Signed _____ (authorized representative) Name: Cesar V. Sierra (authorized representative)

Date 2/24/09 Signed _____ (inspector) Commissions: **NB# 8462, A,N,I NC# 1073** (National Board and jurisdiction no.)

PLAN NO.2-2230

CROSBY

CROSBY VALVE & GAGE COMPANY
WRENTHAM, MASS

Philip Smith 3/16/09. Q.C.-44D

FORM NV-1 FOR SAFETY AND SAFETY RELIEF VALVES
As Required by the Provisions of the ASME Code Rules

FOR INFORMATION ONLY

DATA REPORT
Safety and Safety Relief Valves

1. Manufactured By Crosby Valve & Gage Company, 43 Kendrick St., Wrentham, MA 02093
Name and Address

Model No. HB-65-BP-FN Order No. N94275 Contract Date 4/24/79 National Board No. N/A

2. Manufactured For General Electric Company, 175 Curtner Ave., San Jose, CA 95125 Order No. 205-AJ986
Name and Address

3. Owner Washington Public Power Supply System, Richland, Washington 99352
Name and Address

4. Location of Plant Hanford Reservation, Richland, Washington 99352

5. Valve Identification MPL #B22-F013 Serial No. N63790-00-0062 Drawing No. DS-A-63790 Rev. C

Type Safety Relief (Safety, Safety Relief, Pilot, Power Actuated) Orifice Size R Inch Pipe Size -- Inch Inlet 6 Inch Outlet 10 Inch

6. Set Pressure (psig) 1205 575° F
Rated Temperature

Stamped Capacity 906,621 @ 3 % Overpressure -- Blowdown (psig) 2% to 11%

Hydrostatic Test (psig) Inlet 2370 Outlet 1100 psig (Body Only) 575 psig (Assembled Valve)
(Applicable to Valves for Closed Systems Only)

Pressure Retaining Pieces

	Serial No. Identification	Material Specification Including Type or Grade
a. Bar Stock & Forgings		
Body	N93183-35-0081	ASTM A105-71 Gr. II ASME SA105 Gr. II
Bonnet	N93407-35-0044	ASTM A105-71 Gr. II ASME SA105 Gr. II
b.		
Disc Insert	N93185-34-0094	ASME SA637 Gr. 718
Nozzle	N93184-33-0066	ASME SA182 Gr. F316
Disc Holder*K55484-35-0088	*N89714-34-0119	AMS 5662B
Spring Washers K62858-35-0044	K62856-35-0100 K62857-35-0065	ASTM A105-71 Gr. II ASME SA105 Gr. II
Adjusting Bolt	N93410-33-0069	ASME SA193 Gr. B6
Spindle Point K62873-35-0062	*N89720-34-0074	ASTM A564-71 Type 630 ASME SA564 Type 630
c. Spring K62858-35-0044	*N89722-0020	ASTM A304-66 Gr. 4161H
d. Bolting		
e. Spindle Ball K62873-35-0062	N93213-0062	Stellite #6
Thrust Bearing Adapter	N93409-32-0064	ASME SA193 Gr. B6
Bonnet Stud (BW5, I17)	N93207-0741 thru 0752	ASTM A193-71 Br. B7 ASME SA193 Gr. B7
Bonnet Stud Nut (J87)	N93210-0961 thru 0972	ASME SA194 Gr. 2H
Inlet Stud (BW6)	N93216-0743 thru 0754	ASTM A193-71 Gr. B7 ASME SA193 Gr. B7
Inlet Stud Nut (BW8)	N93218-0747 thru 0758	ASTM A194-71 Gr. 2H ASME SA194 Gr. 2H
Adjusting Bolt Button K63618-33-0071	N93411-33-0071	ASME SA193 Gr. B6

7X00380156

modification consists of replacement of the Disc Insert, Nozzle, Bonnet Stud Nuts, Adjusting Bolt, and Thrust Bearing Adapter, remachining of the Body, Spring Washers, Bonnet, and Spindle Assembly, and adding an Adjusting Bolt Button Assembly. New Serialization is required unless indicated by an asterisk.
Original nameplate removed and new nameplate attached.

N63790-00-00162

CERTIFICATE OF COMPLIANCE

We certify that the statements made in this report are correct and that this valve conforms to the rules of construction of the ASME Code for Nuclear Power Plant Components, Section III, Div. 1, 1971 Edition, Addenda No Addenda (Date), Code Case No. 1567 & 1711.
Class 1

Date 11-5-80 Signed Crosby Valve & Gage Co. (N Certificate Holder) by R. A. Casavant

Our ASME Certificate of Authorization No. 1878 to use the NV symbol expires September 30, 1983 (Date).

CERTIFICATION OF DESIGN

Design information on file at Crosby Valve & Gage Company

Stress analysis report (Class 1 only) on file at Crosby Valve & Gage Company
43 Kendrick Street, Wrentham, Massachusetts 02093

Design specifications certified by[1] Boyd P. Brooks

PE State California Reg. No. 13655

Stress report certified by[1] W.D. Greenlaw

PE State Massachusetts Reg. No. 14784

[1]Signature not required - list name only.

CERTIFICATE OF SHOP INSPECTION

I, the undersigned, holding a valid commission issued by the National Board of Boiler and Pressure Vessel Inspectors and the State or Province of Massachusetts and employed by Factory Mutual Systems* of Norwood, Massachusetts have inspected the pump, or valve, described in this Data Report on 11/18, 1980 and state that to the best of my knowledge and belief, the N Certificate Holder has constructed this pump, or valve, in accordance with the ASME Code for Nuclear Power Plant Components.

By signing this certificate, neither the Inspector nor his employer makes any warrant, expressed or implied, concerning the equipment described in this Data Report. Furthermore, neither the Inspector nor his employer shall be liable in any manner for any personal injury or property damage or a loss of any kind arising from or connected with this inspection.

FOR INFORMATION ONLY

Date 11/18, 1980.

Signed John E. Moore (Inspector) Commissions MASS 1266 (Nat'l. Bd., State, Prov. and No.)

*Arkwright-Boston Manufacturers Mutual Insurance Company - Mutual Boiler & Machinery Div.

ZX00380157

PLAN No 2-2231

ENERGY NORTHWEST
People · Vision · Solutions

FORM NIS-2 OWNER'S REPORT FOR REPAIR/REPLACEMENT ACTIVITY
As Required By The Provisions Of The ASME Code Section XI

Date: 03/16/2009
Sheet: 1 Of 1
Unit: Not Applicable

1. **Owner:** Energy Northwest
   Address: Columbia Generating Station, North Power Plant Loop, Richland, Washington, 99352
2. **Plant:** Columbia Generating Station
   Address: Columbia Generating Station, North Power Plant Loop, Richland, Washington, 99352
3. **(a) Work Performed By:** NWS Technologies, LLC, 131 Venture Boulevard, Spartanburg, SC 29306
   (b) Repair/Replacement Organization P.O. No, Job No, etc.: PO No 326692
   (c) Type Code Symbol Stamp: NWS Technologies, LLC, VR And NR
   (d) Certificate Of Authorization No.: NWS Technologies, LLC, VR No 632 And NR No 81
   (e) Expiration Date: NWS Technologies, LLC, VR - April 03, 2009 And NR - April 09, 2009
4. **Identification Of System:** Main Steam (MS) System
5. **(a) Applicable Construction Code:** ASME Section III, Code Class 1, 1971 Edition with no Addenda, Code Case: See Note 1
   (b) Applicable Edition Of ASME Section XI Used For Repair/Replacement Activity: 2001 Edition with 2003 Addenda
   (c) Applicable ASME Section XI Case(s): None
6. **Identification Of Components**

Name Of Component	Name Of Manufacturer	Manufacturer's Serial No	National Board No	Other I.D.	Year Built	Corrected, Removed Or Installed	ASME Code Stamped (Yes Or No) Code Class
Spare Valve	Crosby	N63790-03-0137	N/A	N/A	1980	See Item 7 Below	Yes, Code Class 1

7. **Description Of Work Performed:** Spare Main Steam Relief Valve (MSRV), Serial No N63790-03-0137 was refurbished by NWS Technologies, LLC, 131 Venture Boulevard, Spartanburg, SC 29306. The work was performed in accordance with NWS Technologies, LLC VR and NR programs as follows:
   1) Disassembled the relief valve to perform the required work.
   2) Removed and reinstalled existing disc insert in the relief valve.
   3) Removed and reinstalled existing nozzle in the relief valve.
   4) Reassembled the relief valve.
   5) Installed one (1) Heli-Coil insert in inlet hole location # 8.
   6) Installed three (3) replacement studs for the relief valve inlet joint. See Note 2.
   7) Tested the relief valve to verify set pressure of 1195 PSIG. Test results acceptable.
   8) Performed VT-2 visual examination during pressure test to confirm pressure boundary integrity of the body to bonnet joint. No evidence of leakage during the pressure test.

NOTES -

1 The applicable ASME Code Cases, if any are listed on the ASME Code Data Reports.
2) Energy Northwest performed VT-1 visual examination on three (3) replacement studs for the relief valve inlet joint. VT-1 visual examination results acceptable.

PLAN No 2-2231

ENERGY NORTHWEST
People · Vision · Solutions

FORM NIS-2 OWNER'S REPORT FOR REPAIR/REPLACEMENT ACTIVITY (Back)

8 Tests Conducted: Hydrostatic [ ] **Pneumatic** [X] **Nominal Operating Pressure** [ ] **Other** [ ]
Exempt [ ] **Test Pressure:** 10 to 15 Psig **Test Temperature:** 78° F

9. Remarks (Applicable Manufacturer's Data Reports to be attached): See attached NVR-1 Code Data Report "Report Of Repair And Replacement Of Nuclear Pressure Relief Devices" for Main Steam Relief Valve (MSRV), Serial No N63790-03-0137, 2) See attached R-4 Code Data Report "Report Supplementary Sheet (NVR-1)" for Main Steam Relief Valve (MSRV), Serial No N63790-03-0137, 3) See attached "Repair And Replacement To Nuclear Components And Systems In Nuclear Power Plants" Certification Report (QC 292A) documenting the modification (upgrade) work performed by Crosby for Main Steam Relief Valve (MSRV), Serial No Serial No N63790-00-0137 (Pre Modification Serial No N56000-01-0042), 4) See attached NV-1 Code Data Report for relief valve Pre Modification Serial No N56000-01-0042 (Post Modification Serial No N63790-00-0137).

CERTIFICATE OF COMPLIANCE

I certify that the statements made in this Owner's Report are correct and that this conforms to the requirements of the ASME Code, Section XI.
Type Code Symbol Stamp: Not Applicable
Certificate Of Authorization No.: Not Applicable
Expiration Date: Not Applicable

Prepared By Kuldip Singh ***Signed By*** Kuldip Singh
Kuldip Singh - Program Lead Engineer (PLE) Kuldip Singh - Program Lead Engineer (PLE)
Date 3/16/09. ***Date*** 3/16/09.

CERTIFICATE OF INSERVICE INSPECTION

I, the undersigned, holding a valid commission issued by the National Board of Boiler and Pressure Vessel Inspectors and the State of Washington ***and employed by*** Hartford Steam Boiler Of Connecticut of Hartford, Connecticut ***have inspected the components described in this Owner's Report during the period*** 7/16/2008 ***to*** 3/27/2009 ***and state to the best of my knowledge and belief, the Owner has performed examinations and taken corrective measures described in this Owner's Report in accordance with the requirements of the ASME Code, Section XI.***
By signing this certificate neither the Inspector nor his employer makes any warranty, expressed or implied, concerning the examinations and corrective measures described in this Owner's Report. Furthermore, neither the Inspector nor his employer shall be liable in any manner for any personal injury or property damage or a loss of any kind arising from or connected with this inspection.

Inspector's Signature ***Commissions*** 13172 WANI
National Board, State, and Endorsements

Date 3/27/2009

PLAN NO. 2-223Φ

FORM NVR-1 REPORT OF REPAIR ☑ REPLACEMENT ☑
OF NUCLEAR PRESSURE RELIEF DEVICES

1. Work performed by: **NWS Technologies, LLC** Purchase Order # 3/16/09 326692
131 Venture Boulevard, Spartanburg, SC 29306

2. Work performed for: Energy Northwest - Columbia Generating Station

3/4. Owner - name, address and identification of nuclear power plant: Energy Northwest - Columbia Generating Station, North Power Plant Loop, Richland, WA 99352-0968

5. a: Repaired pressure relief device: Main Steam Safety Relief Valve
b: Name of manufacturer: Crosby Valve & Gage Co.
c: Identifying nos.

HB-65-BP-FN	new s/n: **N63790-03-0137**	N/A	steam	6 x 10	1980
(type)	(mfr's S/N)	(NB#)	(service)	(size)	(yr.built)

d: Construction Code:

ASME Sec. III Div. 1	1971	N/A	N/A	1
(name/section/division)	(edition)	(addenda)	(Code Cases(s))	(Code Class)

6. ASME Code Section XI applicable for inservice inspection: 2001 (edition) 2003 (addenda) N/A (Code Case(s))

7. ASME Code Section XI used for repairs, replacements: 2001 (edition) 2003 (addenda) N/A (Code Case(s))

8. Construction Code used for repairs, replacements: 1971 (edition) N/A (addenda) N/A (Code Case(s))

9. Design responsibilities: N/A

10. Opening pressure: 1195 psig
Set-pressure adjustment made at: NWS Technologies, LLC using steam

11. Description of work (include name and identifying number of replacement parts): See Form R-4 Report Supplementary Sheet

12. Remarks:

CERTIFICATE OF COMPLIANCE

I, Cesar V. Sierra certify that to the best of my knowledge and belief the statements made in this report are correct and the repair, modification or replacement of the pressure relief devices described above conforms to Section XI of the ASME Code and the National Board Inspection Code "VR" and "NR" rules.
National Board Certificate of Authorization No. **632** to use the "VR" stamp expires April 3, 2009.
National Board Certificate of Authorization No. **81** to use the "NR" stamp expires April 9, 2009.

2/24/09	**NWS Technologies, LLC**	Cesar Sierra	Manager, QA
Date	Repair Organization	Authorized representative	Title

CERTIFICATE OF INSPECTION

I, **Charles F. Toegel Jr.** holding a valid commission issued by The National Board of Boiler and Pressure Vessel Inspectors and certificate of competency issued by the jurisdiction of **North Carolina** and employed by **Hartford Steam Boiler of CT** of Hartford, CT have inspected the repair, modification or replacement described in this report on 24 FEB 2009 and state that to the best of my knowledge and belief, this repair, modification or replacement has been completed in accordance with Section XI of the of the ASME Code and the National Board Inspection Code "VR" and "NR" rules.
By signing this certificate, neither the undersigned nor my employer makes any warranty, expressed or implied, concerning this repair, modification or replacement described in this report. Furthermore, neither the undersigned nor my employer shall be liable in any manner for any personal injury, property damage or loss of any kind arising from or connected with this inspection.

2/24/09	Charles F. Toegel Jr.	**NB # 8462, A, N, I NC# 1073**
Date	Inspector's Signature	Commissions (NB (incl endorsements), jurisdiction,& no.)

FORM R-4 REPORT SUPPLEMENTARY SHEET (NVR-1)

In accordance with provisions of the National Board Inspection Code

1. Work performed by: **NWS Technologies, LLC** Valve S/N: **N63790-03-0137**
   131 Venture Boulevard, Spartanburg, SC 29306

2. Owner: Energy Northwest - Columbia Generating Station

3. Location of installation Energy Northwest - Columbia Generating Station
   North Power Plant Loop, Richland, WA 99352-0968

Purchase Order # 326692

Reference Line No.

Continued from Form NVR-1 for Valve S/N N63790-03-0137

11. NWS Traveler # 08-157
    The valve was disassembled.

    Parts replaced during the repair include:
    Nozzle Ring Set Screw: MC25520005
    Eductor Gasket: MC 56230461
    One Inlet Stud, Cat ID 54400514, Marked: F973
    Two inlet hole studs: Cat ID 18379 Heat Code IV54

    After reassembly, the valve set-pressure was certified using steam as the lift medium.
    The valve was then jacked and lapped to restore seat integrity.
    A final steam seat tightness test was then done at 93% of set-pressure.

Date 2/24/09 Signed (authorized representative) Name: Cesar V. Sierra (authorized representative)

Date 2/24/09 Signed (inspector) Commissions: **NB# 8462, A,N,I NC# 1073** (National Board and jurisdiction no.)

PLAN No. 2-2231

CROSBY

CROSBY VALVE & GAGE COMPANY
WRENTHAM, MA

Q.C.-292, REV.
SHEET 1 OF 2

Philip Smith
3/16/09

REPAIR AND REPLACEMENT TO NUCLEAR COMPONENTS AND SYSTEMS IN NUCLEAR POWER PLANTS

1. Work performed by Crosby Valve & Gage Company 43 Kendrick St. Wrentham, MA 02093
(Name and Address)
(Repair organization's P.O. No., Job No., etc.). NV4000020

2. Owner WASHINGTON PUBLIC POWER RICHLAND,WA 99352-0968
(Name and Address)

3. Name and Identification of Nuclear Power Plant HANFORD #2

4. Address of Nuclear Power Plant RICHLAND ,WA

5. a. Identifying Nos. N63790-00-0137 – – ----- 1973
(Mfr's Serial No.) (Nat'l Bd. No.) (Jurisdiction No.) (Other) (Year Built)
b. Identification of component repaired or replacement component –
c. Name of Manufacturer CROSBY VALVE & GAGE COMPANY

6. Tests conducted: Hydrostatic (X) Pneumatic ( ) Design Pressure ( ) Pressure 2370.0 psi

7. Identification of System MAIN STEAM

8. Applicable Section(s) III of ASME Code, 19 71 Edition
Addenda NO Code Case –

9. Description of work N56000-02-0042 WAS MODIFIED TO N63790-00-0137
(Use of additional sheet(s) or sketch(es) is acceptable if correctly identified)
ASME SEC.XI.1980 EDITION WINTER 1980 ADDENDA.

10. Remarks: THIS MODIFICATION CONSISTED OF THE FOLLOWING CHANGES:

PART	PART NO.	MODIFIED TO PART NO.
BODY	N90118	N93183-41-0124
BONNET	N89717	N93407-44-0055
SPINDLE ASSY	K55465	K62873-44-0058
SPR.WASHER	N89724	K62856-44-0203
SPR.WASHER	N89723	K62857-44-0203
SPRING ASSY	K55466	K62858-31-0001

PART	PART NO.	REPLACED WITH
NOZZLE	N89713	N93184-51-0157
DISC INSERT	N89715	N93185-54-0231
THRUST.BRG.ADAPT	N89725	N93409-33-0007
ADJ.BOLT	N89726	N93410-32-0006
ADJ.BOLT BUTT.	COMMERCIAL	N93411-34-0013
ADJ.BOLT ASSY	COMMERCIAL	K63618-32-0006

Certificate Holder's Serial No. N63790-00-0137

Q.C.-292, REV. A
SHEET 2 OF 2

CERTIFICATE OF COMPLIANCE

We certify that the statements made in this report are correct and all design, material, and workmanship on this MOD. (repair/replacement) conforms to the applicable section of the ASME Code.

Signed Lawrence J. Pace QA Eng Manager 25 Feb 1994
(Authorized Rep. of Repair Organization) (Title) (Date)

CERTIFICATE OF INSPECTION

I, the undersigned, holding a valid commission issued by the National Board of Boiler and Pressure Vessel Inspectors and the State or Province of Massachusetts and employed by Factory Mutual of Norwood, Massachusetts have inspected the repair or replacement described in this report on Feb 25, 1994 and state that to the best of my knowledge and belief, this repair or replacement has been made or constructed in accordance with the applicable section of the ASME Code.

By signing this certificate, neither the Inspector nor his employer makes any warrant, expressed or implied, concerning the repair or replacement described in this report. Furthermore, neither the Inspector nor his employer shall be liable in any manner for any personal injury or property damage or a loss of any kind arising from or connected with this inspection.

Factory Mutual Systems

Date 2/25, 1994.

Signed [illegible] Commissions [illegible]
(Inspector) (Nat'l. Bd., State, Prov. and No.)

PLAN No. 2-2231

Philip Sing! 3/16/09.

WPPSS S/N	WPPSS Set	Bailly S/N	Bailly Set
N63790-00-0134	1175	N56000-01-0037	1175
N63790-00-0135	1205	N56000-01-0099	1130
N63790-00-0136	1205	N56000-02-0043	1205
N63790-00-0137	**1195**	**N56000-02-0042**	**1195**
N63790-00-0138	1185	N56000-01-0038	1175
N63790-00-0139	1165	N56000-01-0100	1130

PLAN NO. 2-2231

CROSBY

CROSB.

WRENTHAM, MASS

3/16/09.

Q.C.-44A

FORM NV-1 FOR SAFETY AND SAFETY RELIEF VALVES
As required by the Provisions of the ASME Code Rules

DATA REPORT
Safety and Safety Relief Valves

1. Manufactured By Crosby Valve & Gage Co., 43 Kendrick St., Wrentham, Mass. 02093
Name and Address

Model No. HB-65-BP-FN Order No. N-105286 Contract Date 6/28/71

2. Manufactured For General Electric Company San Jose, California Order No. 205-AD148
Name and Address

3. Owner Northern Indiana Public Service Co., Bailly Generating Station Nuclear I, Baileytown, Indiana
Name and Address

4. Location of Plant Baileytown, Indiana

5. Valve Identification MPL #B-22-F013 Serial No. N56000-02-0042 Drawing No. H-56000 Rev. C

Type Safety Relief (Safety, Safety Relief, Pilot, Power Actuated) Orifice Size R (Inch) Pipe Size - (Inch) Inlet 6 (Inch) Outlet 10 (Inch)

6. Set Pressure (PSIG) 1195 575° F (Rated Temperature)

Stamped Capacity 898800 (Sat. Steam) Lbs. Hr. = 3 % Overpressure -- Blowdown 5%

Hydrostatic Test (PSIG) Inlet 2370 Complete Valve 825

7. The material, design, construction and workmanship comply with ASME Code, Section III.

Class 1 Edition 1971 Addenda Date Summer 1972

Pressure Containing or Pressure Retaining Components

		Serial No. Identification	Material Specification Including Type or Grade
a. Forgings			
Body		N89711-32-0024	ASTM A-105-71 Gr. II ASME SA-105 Gr. II
Bonnet		N89717-32-0018	ASTM A-105-71 Gr. II ASME SA-105 Gr. II
b. Bar Stock and Forgings			
Disc Insert		N89715-31-0034	ASTM A-461-65 Type 630
Nozzle		N89713-32-0031	ASTM A-182-71 F316 ASME SA-182 F316
Disc Holder		N89714-32-0042	AMS 5662 B
Spring Washers	Top	N89724-32-0042	ASTM A-105-71 Gr. II
	Bottom	N89723-31-0003	ASME SA-105 Gr. II
Adjusting Bolt		N89726-32-0012	ASTM A-193-71 Gr. B6 ASME SA-193 Gr. B6
Spindle Point		N89720-32-0034	ASTM A-564-72 Type 630

EMR
3-2-75

	Serial No. or Identification	Material Specification Including Type or Grade
c. Spring	NX2689-0047	ASTM A-304-66 Gr. 4161H
d. Bolting		
e. [redacted]		
Inlet Stud	N89727-0493 thru 0504	ASTM A-193-71 Gr. B7 ASME SA-193 Gr. B7
Inlet Stud Nut	N89728-0497 thru 0508	ASTM A-194-71 Cl. 2H ASME SA-194 Cl. 2H
Bonnet Stud	N89718-0497 thru 0508	ASTM A-193-71 Gr. B7 ASME SA-139 Gr. B7
Bonnet Stud Nut	N89719-0499 thru 0510	ASTM A-194-71 Cl. 2H ASME SA-194 Cl. 2H
OTHER PARTS		
Spindle Ball	N89721-0034	Stellite 6
BARS & FORGINGS	N89725-31-0009	ASTM A-193-71 Gr. B6 ASME SA-193 Gr. B6

We certify that the statements made in this report are correct.

Date 10-31 1973 Signed Crosby Valve & Gage Co. By [signature]
Manufacturer QA Manager

Certificate of Authorization No. 331 expires November 9, 1974

CERTIFICATE OF SHOP INSPECTION

I, the undersigned, holding a valid commission issued by the National Board of Boiler and Pressure Vessel Inspectors and the State or Province of Mass. and employed by Mutual Boiler & Machinery Insurance Co.*, Waltham, Mass. have inspected the equipment described in this Data Report on October 11, 1973 and state that to the best of my knowledge and belief, the Manufacturer has constructed this equipment in accordance with the applicable Subsections of ASME Section III.

By signing this certificate, neither the Inspector nor his employer makes any warranty, expressed or implied, concerning the equipment described in this Data Report. Furthermore, neither the Inspector nor his employer shall be liable in any manner for any personal injury or property damage or a loss of any kind arising from or connected with this inspection.

*Factory Mutual Group of Insurance Co.

Date October 11 1973

[signature] Commissions N.B. 6665 Mass. 1076
(Inspector) National Board, State, Province and No.)

BWRD-OC EMB.

3-3-75

ENERGY NORTHWEST
People · Vision · Solutions

FORM NIS-2 OWNER'S REPORT FOR REPAIR/REPLACEMENT ACTIVITY
As Required By The Provisions Of The ASME Code Section XI

Date: 07/06/2009
Sheet: 1 Of 2
Unit: Not Applicable

1. **Owner:** Energy Northwest
   Address: Columbia Generating Station, North Power Plant Loop, Richland, Washington, 99352
2. **Plant:** Columbia Generating Station
   Address: Columbia Generating Station, North Power Plant Loop, Richland, Washington, 99352
3. (a) **Work Performed By:** Energy Northwest
   (b) **Repair/Replacement Organization P.O. No, Job No, etc.:** Energy Northwest
   (c) **Type Code Symbol Stamp:** Not Applicable
   (d) **Certificate Of Authorization No.:** Not Applicable
   (e) **Expiration Date:** Not Applicable
4. **Identification Of System:** Main Steam (MS) System
5. (a) **Applicable Construction Code:** ASME Section III, Code Class 1, 1971 Edition with Winter 1973 Addenda, Code Case: Note 1
   (b) **Applicable Edition Of ASME Section XI Used For Repair/Replacement Activity:** 2001 Edition with 2003 Addenda
   (c) **Applicable ASME Section XI Case(s):** None
6. **Identification Of Components**

Name Of Component	Name Of Manufacturer	Manufacturer's Serial No	National Board No	Other I.D.	Year Built	Corrected, Removed Or Installed	ASME Code Stamped (Yes Or No) Code Class
B22-G001C	WPPSS*	B22-G001C-P1	N/A	N/A	1983	See Item 7 Below	Yes, Code Class 1
MS-RV-1C	Crosby	N63790-03-0045	N/A	N/A	1981	Removed	Yes, Code Class 1
MS-RV-1C	Crosby	N63790-03-0046	N/A	N/A	1980	Installed	Yes, Code Class 1

7. **Description Of Work Performed:** Replaced existing relief valve MS-RV-1C The replacement work was performed as follows:
   1) Removed twelve (12) existing standard (regular) nuts for the relief valve inlet joint.
   2) Removed sixteen (16) existing standard (regular) bolts for the relief valve outlet joint.
   3) Removed existing relief valve Serial No N63790-03-0045 (Previous/Original Serial No N63790-00-0045) with set pressure of 1165 Psig at rated temperature of 575°F.
   4) Performed VT-1 visual examination on twelve (12) new "Superbolt" nuts for the relief valve inlet joint. VT-1 visual examination results acceptable.
   5) Performed VT-1 visual examination on eight (8) new "Jackbolts" associated with new "Superbolt" nuts for the relief valve inlet joint. VT-1 visual examination results acceptable.
   6) Installed replacement relief valve with Serial No N63790-03-0046 (Previous/Original Serial No N63790-00-0046) with set pressure of 1165 Psig at rated temperature of 575° F.
   7) Installed VT-1 visually examined twelve (12) new "Superbolts" nuts for the relief valve inlet joint. Note - None of the existing standard (regular) nuts were reused.
   8) Installed VT-1 visually examined eight (8) new "Jackbolts" associated with new "Superbolt" nuts for the relief valve inlet joint.
   9) Installed sixteen (16) new "Superbolt" bolts for the relief valve outlet joint. Note - None of the existing standard (regular) bolts were reused.
   10) Performed VT-2 visual examination during pressure test to confirm pressure boundary integrity of the relief valve inlet joint. No evidence of leakage during the pressure test.

NOTES -
1) The applicable ASME Code Cases, if any are listed on the ASME Code Data Reports.
2) * Company name changed from Washington Public Power Supply System (WPPSS) to Energy Northwest (EN) in 1999.

Continued On Sheet 2 of 2

PLAN No 2-2232

ENERGY NORTHWEST
People·Vision·Solutions

FORM NIS-2 OWNER'S REPORT FOR REPAIR/REPLACEMENT ACTIVITY (Back)

8 Tests Conducted: Hydrostatic ☐ **Pneumatic** ☐ **Nominal Operating Pressure** ☐ **Other** ☐ *
Exempt ☐ **Test Pressure:** 1020 Psig **Test Temperature:** 165° F

9. Remarks (Applicable Manufacturer's Data Reports to be attached): 1) See attached NVR-1 report for replacement relief valve Serial No N63790-03-0046 (Previous/Original Serial No N63790-00-0046), 2) See attached R-4 report for replacement relief valve Serial No N63790-03-0046 (Previous/Original Serial No N63790-00-0046), 3) See attached NV-1 Code Data Report for previous/original relief valve Serial No N63790-00-0046, 4) * The test pressure and the test temperature on the relief valve inlet joint was recorded during ASME Section XI pressure test which was performed in accordance with PPM No OSP-RPV-R801 "Reactor Pressure Vessel Leakage Test".

CERTIFICATE OF COMPLIANCE

I certify that the statements made in this Owner's Report are correct and that this conforms to the requirements of the ASME Code, Section XI.
Type Code Symbol Stamp: Not Applicable
Certificate Of Authorization No.: Not Applicable
Expiration Date: Not Applicable

Prepared By Kuldip Singh ***Signed By*** Kuldip Singh
Kuldip Singh - Program Lead Engineer (PLE) Kuldip Singh - Program Lead Engineer (PLE)

Date 7/7/09 ***Date*** 7/7/09.

CERTIFICATE OF INSERVICE INSPECTION

I, the undersigned, holding a valid commission issued by the National Board of Boiler and Pressure Vessel Inspectors and the State of Washington ***and employed by*** Hartford Steam Boiler Of Connecticut of Hartford, Connecticut ***have inspected the components described in this Owner's Report during the period*** 4/17/2009 ***to*** 7/22/2009 ***and state to the best of my knowledge and belief, the Owner has performed examinations and taken corrective measures described in this Owner's Report in accordance with the requirements of the ASME Code, Section XI.***
By signing this certificate neither the Inspector nor his employer makes any warranty, expressed or implied, concerning the examinations and corrective measures described in this Owner's Report. Furthermore, neither the Inspector nor his employer shall be liable in any manner for any personal injury or property damage or a loss of any kind arising from or connected with this inspection.

Inspector's Signature ***Commissions*** 13172 WANI
National Board, State, and Endorsements

Date 7/22/2009

PLAN No 2-2232

ENERGY NORTHWEST
People · Vision · Solutions

FORM NIS-2 OWNER'S REPORT FOR REPAIR/REPLACEMENT ACTIVITY
As Required By The Provisions Of The ASME Code Section XI

Date: 07/06/2009
Sheet: 2 Of 2
Unit: Not Applicable

1. **Owner:** Energy Northwest
   Address: Columbia Generating Station, North Power Plant Loop, Richland, Washington, 99352
2. **Plant:** Columbia Generating Station
   Address: Columbia Generating Station, North Power Plant Loop, Richland, Washington, 99352
3. (a) **Work Performed By:** Energy Northwest
   (b) **Repair/Replacement Organization P.O. No, Job No, etc.:** Energy Northwest
   (c) **Type Code Symbol Stamp:** Not Applicable
   (d) **Certificate Of Authorization No.:** Not Applicable
   (e) **Expiration Date:** Not Applicable
4. **Identification Of System:** Main Steam (MS) System
5. (a) **Applicable Construction Code:** ASME Section III, Code Class 1, 1971 Edition with Winter 1973 Addenda, Code Case: Note 1
   (b) **Applicable Edition Of ASME Section XI Used For Repair/Replacement Activity:** 2001 Edition with 2003 Addenda
   (c) **Applicable ASME Section XI Case(s):** None
6. **Identification Of Components**

Name Of Component	Name Of Manufacturer	Manufacturer's Serial No	National Board No	Other I.D.	Year Built	Corrected, Removed Or Installed	ASME Code Stamped (Yes Or No) Code Class
B22-G001C	WPPSS*	B22-G001C-P1	N/A	N/A	1983	See Item 7 Below	Yes, Code Class 1
MS-RV-1C	Crosby	N63790-03-0045	N/A	N/A	1981	Removed	Yes, Code Class 1
MS-RV-1C	Crosby	N63790-03-0046	N/A	N/A	1980	Installed	Yes, Code Class 1

7. Description Of Work Performed: Notes Continuation From Sheet 1 of 2

NOTES -

3) The existing ASME Code Stamped piping system in which the replacement valve Serial No N63790-03-0046 (Previous/Original Serial No N63790-00-0046) was installed is Main Steam (MS) piping system B22-G001C-P1. This piping system is certified to comply with ASME Section III, Code Class 1, 1971 Edition with Winter 1973 Addenda requirements.

4) The existing ASME Code Stamped piping system applicable to the relief valve outlet side is certified to comply with ASME Section III, Code Class 3, 1971 Edition with Winter 1973 Addenda requirements.

5) The replacement relief valve Serial No N63790-03-0046 (Previous/Original Serial No N63790-00-0046) is certified to comply with ASME Section III, Code Class 1, 1971 Edition with no Addenda requirements.

6) The relief valve serial number in parenthesis is the old (previous/original) serial numbers. The relief valve serial number with out the parenthesis is the serial numbers of relief valve previously modified (upgraded) by NWS Technologies, LLC, 131 Venture Boulevard, Spartanburg, SC 29301. The modification (upgrading) work on the relief valve was performed in accordance with NWS Technologies, LLC VR and NR programs.

Philip Sing
7/7/09

PLANT No. 2-2232

FORM NVR-1 REPORT OF REPAIR ☒ REPLACEMENT ☒ 7/7/08.
OF NUCLEAR PRESSURE RELIEF DEVICES

1. Work performed by: **NWS Technologies, LLC** Purchase Order # 313236
   131 Venture Boulevard, Spartanburg, SC 29306
2. Work performed for: Energy Northwest - Columbia Generating Station
3/4. Owner - name, address and identification of nuclear power plant: Energy Northwest - Columbia Generating Station, North Power Plant Loop, Richland, WA 99352-0968
5. a: Repaired pressure relief device: Main Steam Safety Relief Valve
   b: Name of manufacturer: Crosby Valve & Gage Co.
   c: Identifying nos.

HB-65-BP-FN	new s/n: **N63790-03-0046**	N/A	steam	6 x 10	1980
(type)	(mfr's S/N)	(NB#)	(service)	(size)	(yr.built)

   d: Construction Code:

ASME Sec. III Div. 1	1971	N/A	N/A	1
(name/section/division)	(edition)	(addenda)	(Code Cases(s))	(Code Class)

6. ASME Code Section XI applicable for inservice inspection: 2001 (edition) 2003 (addenda) N/A (Code Case(s))
7. ASME Code Section XI used for repairs, replacements: 2001 (edition) 2003 (addenda) N/A (Code Case(s))
8. Construction Code used for repairs, replacements: 1971 (edition) N/A (addenda) N/A (Code Case(s))
9. Design responsibilities: N/A MS-RV-1C, S/N N63790-03-0046
10. Opening pressure: 1165 psig
    Set-pressure adjustment made at: NWS Technologies, LLC using steam
11. Description of work (include name and identifying number of replacement parts): See Form R-4 Report Supplementary Sheet
12. Remarks:

CERTIFICATE OF COMPLIANCE

I, Cesar V. Sierra certify that to the best of my knowledge and belief the statements made in this report are correct and the repair, modification or replacement of the pressure relief devices described above conforms to Section XI of the ASME Code and the National Board Inspection Code "VR" and "NR" rules.
National Board Certificate of Authorization No. **632** to use the "VR" stamp expires April 3, 2009.
National Board Certificate of Authorization No. **81** to use the "NR" stamp expires April 9, 2009.

2/15/09	**NWS Technologies, LLC**	[signature]	Manager, QA
Date	Repair Organization	Authorized representative	Title

CERTIFICATE OF INSPECTION

I, **Charles F. Toegel Jr.** holding a valid commission issued by The National Board of Boiler and Pressure Vessel Inspectors and certificate of competency issued by the jurisdiction of **North Carolina** and employed by **Hartford Steam Boiler of CT** of Hartford, CT have inspected the repair, modification or replacement described in this report on 16 FEB 2009 and state that to the best of my knowledge and belief, this repair, modification or replacement has been completed in accordance with Section XI of the of the ASME Code and the National Board Inspection Code "VR" and "NR" rules.
By signing this certificate, neither the undersigned nor my employer makes any warranty, expressed or implied, concerning this repair, modification or replacement described in this report. Furthermore, neither the undersigned nor my employer shall be liable in any manner for any personal injury, property damage or loss of any kind arising from or connected with this inspection.

2/16/09	[signature]	**NB # 8462, A, N, I NC# 1073**
Date	Inspector's Signature	Commissions (NB (incl endorsements), jurisdiction,& no)

PLAN No. 2-2232

Philip Bumb 7/7/09.

FORM R-4 REPORT SUPPLEMENTARY SHEET (NVR-1)

in accordance with provisions of the National Board Inspection Code

1. Work performed by: **NWS Technologies, LLC** Valve S/N: **N63790-03-0046**
   131 Venture Boulevard, Spartanburg, SC 29306

2. Owner: Energy Northwest - Columbia Generating Station

3. Location of installation Energy Northwest - Columbia Generating Station
   North Power Plant Loop, Richland, WA 99352-0968

Purchase Order # 313236

Reference Line No. MS-RV-1C, S/N N63790-03-0046

Continued from Form NVR-1 for Valve S/N N63790-03-0046

11. NWS Traveler # 02-140
The valve was disassembled.

Parts replaced during the repair include:
Nozzle: S/N N97498-55-0170
Disc Insert: New S/N N97499-46-0128
Spindle: K82137-43-0043
Bellows/Disc Ring Assembly: K55484-47-0260
Eductor Gasket: MC 56230461

MC 56230461

After reassembly, the valve set-pressure was certified using steam as the lift medium.
The valve was then jacked and lapped to restore seat integrity.
A final steam seat tightness test was then done at 93% of set-pressure.

Date 2/15/09 Signed (authorized representative) Name: Cesar V. Sierra (authorized representative)

Date 2/16/09 Signed (inspector) Commissions: **NB# 8462, A,N,I NC# 1073** (National Board and jurisdiction no.)

PLAN NO. 2-2232

Philip Samples 7/7/09

CROSBY

CROSBY VALVE & GAGE COMPANY
WRENTHAM, MASS

MS-RV-1C, S/N N63790-03-0046

FORM NV-1 FOR SAFETY AND SAFETY RELIEF VALVES Q.C.-44D
As Required by the Provisions of the ASME Code Rules

DATA REPORT
Safety and Safety Relief Valves

FOR INFORMATION ONLY

1. Manufactured By Crosby Valve & Gage Company, 43 Kendrick St., Wrentham, MA 02093
Name and Address

Model No. HB-65-BP-FN Order No. N94275 Contract Date 4/24/79 National Board No. N/A

2. Manufactured For General Electric Company, 175 Curtner Ave., San Jose, CA 95125 Order No. 205-AJ986
Name and Address

3. Owner Washington Public Power Supply System, Richland, Washington 99352
Name and Address

4. Location of Plant Hanford Reservation, Richland, Washington 99352

5. Valve Identification MPL #B22-F013 Serial No N63790-00-0046 Drawing No. DS-A-63790 Rev. C

Type Safety Relief (Safety, Safety Relief, Pilot, Power Actuated) Orifice Size R Inch Pipe Size -- Inch Inlet 6 Inch Outlet 10 Inch

6. Set Pressure (psig) 1150 575° F (Rated Temperature)

Stamped Capacity 865, 725 @ 3 % Overpressure -- Blowdown (psig) 2% to 11%

Hydrostatic Test (psig) Inlet 2370 Outlet 975 psig (Assembled Valve) 1100 psig (Body Only)
(Applicable to Valves for Closed Systems Only)

Pressure Retaining Pieces

	Serial No. Identification	Material Specification Including Type or Grade
a. ~~Forgings~~ Bar Stock & Forgings		
Body	N93183-35-0065	ASTM A105-71 Gr. II ASME SA105 Gr. II
Bonnet	N93407-35-0028	ASTM A105-71 Gr. II ASME SA105 Gr. II
b. ~~Forgings~~		
~~Forgings~~ Disc Insert	N93185-34-0077	ASME SA637 Gr. 718
Nozzle	N93184-32-0048	ASME SA182 Gr. F316
Disc Holder *K55484-35-0094	*N89714-34-0082	AMS 5662B
Spring Washers K62858-35-0028	K62856-35-0084 K62857-35-0049	ASTM A105-71 Gr. II ASME SA105 Gr. II
Adjusting Bolt	N93410-33-0053	ASME SA193 Gr. B6
Spindle Point K62873-37-0139	N89720-43-0136	ASME SA564 Type 630
c. Spring K62858-35-0028	*N89722-0002	ASTM A304-66 Gr. 4161H
d. Bolting		7X00380095
e. ~~Forgings~~ Spindle Ball K62873-37-0139	N93213-0206	Stoody #6
Thrust Bearing Adapter	N93409-32-0048	ASME SA193 Gr. B6
Bonnet Stud (I17)	N93207-0549 thru 0560	ASTM A193-71 Gr. B7 ASME SA193 Gr. B7
Bonnet Stud Nut (J87)	N93210-0769 thru 0780	ASME SA194 Gr. 2H
Inlet Stud (BW6)	N93216-0551 thru 0562	ASTM A193-71 Gr. B7 ASME SA193 Gr. B7
Inlet Stud Nut (BW8)	N93218-0555 thru 0566	ASTM SA194-71 Gr. 2H ASME SA194 Gr. 2H

Valve originally built against Crosby Order No. N103600, Assembly No. N56000. Valve modification consists of replacement of the Disc Insert, Nozzle, Bonnet Stud Nuts, Adjusting Bolt, and Thrust Bearing Adapter, remachining of the Body, Spring Washers, Bonnet, and Spindle Assembly, and adding an Adjusting Bolt Button Assembly. New Serialization is required unless indicated by an asterisk.
Original nameplate removed and new nameplate attached.

N103790-00-0046

CERTIFICATE OF COMPLIANCE

We certify that the statements made in this report are correct and that this valve conforms to the rules of construction of the ASME Code for Nuclear Power Plant Components, Section III, Div. 1, 1971 Edition, Addenda No Addenda (Date), Code Case No. 1567 & 1711.
Class 1

Date 11-5-80 Signed Crosby Valve & Gage Co. (N Certificate Holder) by R.A. Cadwant

Our ASME Certificate of Authorization No. 1878 to use the NV symbol expires September 30, 1983 (Date).

CERTIFICATION OF DESIGN

Design information on file at Crosby Valve & Gage Company

Stress analysis report (Class 1 only) on file at Crosby Valve & Gage Company
43 Kendrick Street, Wrentham, Massachusetts 02093

Design specifications certified by[1] Boyd P. Brooks

PE State California Reg. No. 13655

Stress report certified by[1] W.D. Greenlaw

PE State Massachusetts Reg. No. 14784

[1]Signature not required - list name only.

FOR INFORMATION ONLY

CERTIFICATE OF SHOP INSPECTION

I, the undersigned, holding a valid commission issued by the National Board of Boiler and Pressure Vessel Inspectors and the State or Province of Massachusetts and employed by Factory Mutual Systems* of Norwood, Massachusetts have inspected the pump, or valve, described in this Data Report on 1/9, 19 81 and state that to the best of my knowledge and belief, the N Certificate Holder has constructed this pump, or valve, in accordance with the ASME Code for Nuclear Power Plant Components.

By signing this certificate, neither the Inspector nor his employer makes any warrant, expressed or implied, concerning the equipment described in this Data Report. Furthermore, neither the Inspector nor his employer shall be liable in any manner for any personal injury or property damage or a loss of any kind arising from or connected with this inspection.

Date 1/9 19 81.

Signed John E. Moore (Inspector) Commissions MASS 1266 (Nat'l. Bd., State, Prov. and No.)

*Arkwright-Boston Manufacturers Mutual Insurance Company - Mutual Boiler & Machinery Div.

ZX00380096

ENERGY NORTHWEST
People·Vision·Solutions

FORM NIS-2 OWNER'S REPORT FOR REPAIR/REPLACEMENT ACTIVITY
As Required By The Provisions Of The ASME Code Section XI

1. Owner: Energy Northwest
Address: Columbia Generating Station, North Power Plant Loop, Richland, Washington, 99352
2. Plant: Columbia Generating Station
Address: Columbia Generating Station, North Power Plant Loop, Richland, Washington, 99352

Date: 07/06/2009
Sheet: 1 Of 2
Unit: Not Applicable

3. (a) Work Performed By: Energy Northwest
(b) Repair/Replacement Organization P.O. No, Job No, etc.: Energy Northwest
(c) Type Code Symbol Stamp: Not Applicable
(d) Certificate Of Authorization No.: Not Applicable
(e) Expiration Date: Not Applicable
4. Identification Of System: Main Steam (MS) System
5. (a) Applicable Construction Code: ASME Section III, Code Class 1, 1971 Edition with Winter 1973 Addenda, Code Case: Note 1
(b) Applicable Edition Of ASME Section XI Used For Repair/Replacement Activity: 2001 Edition with 2003 Addenda
(c) Applicable ASME Section XI Case(s): None
6. Identification Of Components

Name Of Component	Name Of Manufacturer	Manufacturer's Serial No	National Board No	Other I.D.	Year Built	Corrected, Removed Or Installed	ASME Code Stamped (Yes Or No) Code Class
B22-G001C	WPPSS*	B22-G001C-P1	N/A	N/A	1983	See Item 7 Below	Yes, Code Class 1
MS-RV-2C	Crosby	N63790-03-0048	N/A	N/A	1980	Removed	Yes, Code Class 1
MS-RV-2C	Crosby	N63790-03-0047	N/A	N/A	1981	Installed	Yes, Code Class 1

7. Description Of Work Performed: Replaced existing relief valve MS-RV-2C The replacement work was performed as follows:

1) Removed twelve (12) existing standard (regular) nuts for the relief valve inlet joint.
2) Removed sixteen (16) existing standard (regular) bolts for the relief valve outlet joint.
3) Removed existing relief valve Serial No N63790-03-0048 (Previous/Original Serial No N63790-00-0048) with set pressure of 1175 Psig at rated temperature of 575°F.
4) Performed VT-1 visual examination on twelve (12) new "Superbolt" nuts for the relief valve inlet joint. VT-1 visual examination results acceptable.
5) Performed VT-1 visual examination on eight (8) new "Jackbolts" associated with new "Superbolt" nuts for the relief valve inlet joint. VT-1 visual examination results acceptable.
6) Installed replacement relief valve with Serial No N63790-03-0047 (Previous/Original Serial No N63790-00-0047) with set pressure of 1175 Psig at rated temperature of 575° F.
7) Installed VT-1 visually examined twelve (12) new "Superbolts" nuts for the relief valve inlet joint. Note - None of the existing standard (regular) nuts were reused.
8) Installed VT-1 visually examined eight (8) new "Jackbolts" associated with new "Superbolt" nuts for the relief valve inlet joint.
9) Installed sixteen (16) new "Superbolt" bolts for the relief valve outlet joint. Note - None of the existing standard (regular) bolts were reused.
10) Performed VT-2 visual examination during pressure test to confirm pressure boundary integrity of the relief valve inlet joint. No evidence of leakage during the pressure test.

NOTES -

1) The applicable ASME Code Cases, if any are listed on the ASME Code Data Reports.
2) * Company name changed from Washington Public Power Supply System (WPPSS) to Energy Northwest (EN) in 1999.

Continued On Sheet 2 of 2

PLAN No 2-2233

ENERGY NORTHWEST
People·Vision·Solutions

FORM NIS-2 OWNER'S REPORT FOR REPAIR/REPLACEMENT ACTIVITY (Back)

8 Tests Conducted: Hydrostatic [ ] Pneumatic [ ] Nominal Operating Pressure [ ] Other [*]
Exempt [ ] Test Pressure: 1020 Psig Test Temperature: 165° F

9. Remarks (Applicable Manufacturer's Data Reports to be attached): 1) See attached NVR-1 report for replacement relief valve Serial No N63790-03-0047 (Previous/Original Serial No N63790-00-0047), 2) See attached R-4 report for replacement relief valve Serial No N63790-03-0047 (Previous/Original Serial No N63790-00-0047), 3) See attached NV-1 Code Data Report for previous/original relief valve Serial No N63790-00-0047, 4) * The test pressure and the test temperature on the relief valve inlet joint was recorded during ASME Section XI pressure test which was performed in accordance with PPM No OSP-RPV-R801 "Reactor Pressure Vessel Leakage Test".

CERTIFICATE OF COMPLIANCE

I certify that the statements made in this Owner's Report are correct and that this conforms to the requirements of the ASME Code, Section XI.
Type Code Symbol Stamp: Not Applicable
Certificate Of Authorization No.: Not Applicable
Expiration Date: Not Applicable

Prepared By Kuldip Singh - Program Lead Engineer (PLE) **Signed By** Kuldip Singh - Program Lead Engineer (PLE)

Date 7/7/09 **Date** 7/7/09

CERTIFICATE OF INSERVICE INSPECTION

I, the undersigned, holding a valid commission issued by the National Board of Boiler and Pressure Vessel Inspectors and the State of Washington *and employed by* Hartford Steam Boiler Of Connecticut of Hartford, Connecticut *have inspected the components described in this Owner's Report during the period* 5-4-09 *to* 8-14-09 *and state to the best of my knowledge and belief, the Owner has performed examinations and taken corrective measures described in this Owner's Report in accordance with the requirements of the ASME Code, Section XI.*
By signing this certificate neither the Inspector nor his employer makes any warranty, expressed or implied, concerning the examinations and corrective measures described in this Owner's Report. Furthermore, neither the Inspector nor his employer shall be liable in any manner for any personal injury or property damage or a loss of any kind arising from or connected with this inspection.

Inspector's Signature **Commissions** 13324 W ANI
National Board, State, and Endorsements

Date 8-4-2009

PLAN No 2-2233

ENERGY NORTHWEST
People·Vision·Solutions

FORM NIS-2 OWNER'S REPORT FOR REPAIR/REPLACEMENT ACTIVITY
As Required By The Provisions Of The ASME Code Section XI

Date: 07/06/2009
Sheet: 2 Of 2
Unit: Not Applicable

1. **Owner:** Energy Northwest
   Address: Columbia Generating Station, North Power Plant Loop, Richland, Washington, 99352
2. **Plant:** Columbia Generating Station
   Address: Columbia Generating Station, North Power Plant Loop, Richland, Washington, 99352
3. (a) **Work Performed By:** Energy Northwest
   (b) **Repair/Replacement Organization P.O. No, Job No, etc.:** Energy Northwest
   (c) **Type Code Symbol Stamp:** Not Applicable
   (d) **Certificate Of Authorization No.:** Not Applicable
   (e) **Expiration Date:** Not Applicable
4. **Identification Of System:** Main Steam (MS) System
5. (a) **Applicable Construction Code:** ASME Section III, Code Class 1, 1971 Edition with Winter 1973 Addenda, Code Case: Note 1
   (b) **Applicable Edition Of ASME Section XI Used For Repair/Replacement Activity:** 2001 Edition with 2003 Addenda
   (c) **Applicable ASME Section XI Case(s):** None
6. **Identification Of Components**

Name Of Component	Name Of Manufacturer	Manufacturer's Serial No	National Board No	Other I.D.	Year Built	Corrected, Removed Or Installed	ASME Code Stamped (Yes Or No) Code Class
B22-G001C	WPPSS*	B22-G001C-P1	N/A	N/A	1983	See Item 7 Below	Yes, Code Class 1
MS-RV-2C	Crosby	N63790-03-0048	N/A	N/A	1980	Removed	Yes, Code Class 1
MS-RV-2C	Crosby	N63790-03-0047	N/A	N/A	1981	Installed	Yes, Code Class 1

7. **Description Of Work Performed: Notes Continuation From Sheet 1 of 2**

NOTES -

3) The existing ASME Code Stamped piping system in which the replacement valve Serial No N63790-03-0047 (Previous/Original Serial No N63790-00-0047) was installed is Main Steam (MS) piping system B22-G001C-P1. This piping system is certified to comply with ASME Section III, Code Class 1, 1971 Edition with Winter 1973 Addenda requirements.
4) The existing ASME Code Stamped piping system applicable to the relief valve outlet side is certified to comply with ASME Section III, Code Class 3, 1971 Edition with Winter 1973 Addenda requirements.
5) The replacement relief valve Serial No N63790-03-0047 (Previous/Original Serial No N63790-00-0047) is certified to comply with ASME Section III, Code Class 1, 1971 Edition with no Addenda requirements.
6) The relief valve serial number in parenthesis is the old (previous/original) serial numbers. The relief valve serial number with out the parenthesis is the serial numbers of relief valve previously modified (upgraded) by NWS Technologies, LLC, 131 Venture Boulevard, Spartanburg, SC 29301. The modification (upgrading) work on the relief valve was performed in accordance with NWS Technologies, LLC VR and NR programs.

7/7/09

PLAN No. 2-2233

FORM NVR-1 REPORT OF REPAIR ☒ REPLACEMENT ☒
OF NUCLEAR PRESSURE RELIEF DEVICES

1. Work performed by: **NWS Technologies, LLC** Purchase Order # 326692
131 Venture Boulevard, Spartanburg, SC 29306

2. Work performed for: Energy Northwest - Columbia Generating Station

3/4. Owner - name, address and identification of nuclear power plant: Energy Northwest - Columbia Generating Station, North Power Plant Loop, Richland, WA 99352-0968

5. a: Repaired pressure relief device: Main Steam Safety Relief Valve
b: Name of manufacturer: Crosby Valve & Gage Co.
c: Identifying nos.

(type)	(mfr's S/N)	(NB#)	(service)	(size)	(yr.built)
HB-65-BP-FN	new s/n: N63790-03-0047	N/A	steam	6 x 10	1981

d: Construction Code:

(name/section/division)	(edition)	(addenda)	(Code Cases(s))	(Code Class)
ASME Sec. III Div. 1	1971	N/A	N/A	1

	(edition)	(addenda)	(Code Case(s))
6. ASME Code Section XI applicable for inservice inspection:	2001	2003	N/A
7. ASME Code Section XI used for repairs, replacements:	2001	2003	N/A
8. Construction Code used for repairs, replacements:	1971	N/A	N/A

9. Design responsibilities: N/A MS-RV-2C, S/N N63790-03-0047

10. Opening pressure: 1175 psig
Set-pressure adjustment made at: NWS Technologies, LLC using steam

11. Description of work (include name and identifying number of replacement parts): See Form R-4 Report Supplementary Sheet

12. Remarks:

CERTIFICATE OF COMPLIANCE

I, Cesar V. Sierra certify that to the best of my knowledge and belief the statements made in this report are correct and the repair, modification or replacement of the pressure relief devices described above conforms to Section XI of the ASME Code and the National Board Inspection Code "VR" and "NR" rules.
National Board Certificate of Authorization No. 632 to use the "VR" stamp expires April 3, 2009.
National Board Certificate of Authorization No. 81 to use the "NR" stamp expires April 9, 2009.

Date	Repair Organization	Authorized representative	Title
2/24/09	NWS Technologies, LLC	[signature]	Manager, QA

CERTIFICATE OF INSPECTION

I, **Charles F. Toegel Jr.** holding a valid commission issued by The National Board of Boiler and Pressure Vessel Inspectors and certificate of competency issued by the jurisdiction of **North Carolina** and employed by **Hartford Steam Boiler of CT** of Hartford, CT have inspected the repair, modification or replacement described in this report on 24 FEB 2009 and state that to the best of my knowledge and belief, this repair, modification or replacement has been completed in accordance with Section XI of the of the ASME Code and the National Board Inspection Code "VR" and "NR" rules.
By signing this certificate, neither the undersigned nor my employer makes any warranty, expressed or implied, concerning this repair, modification or replacement described in this report. Furthermore, neither the undersigned nor my employer shall be liable in any manner for any personal injury, property damage or loss of any kind arising from or connected with this inspection.

Date	Inspector's Signature	Commissions (NB (incl endorsements), jurisdiction, & no.)
2/24/09	[signature]	NB # 8462, A, N, I NC# 1073

PLAN No. 2-2233

Dwight Singh 7/7/09

FORM R-4 REPORT SUPPLEMENTARY SHEET (NVR-1)

In accordance with provisions of the National Board Inspection Code

1. Work performed by: **NWS Technologies, LLC** Valve S/N: **N63790-03-0047**
   131 Venture Boulevard, Spartanburg, SC 29306

2. Owner: Energy Northwest - Columbia Generating Station

3. Location of installation Energy Northwest - Columbia Generating Station
   North Power Plant Loop, Richland, WA 99352-0968

Purchase Order # 326692

Reference Line No. MS-RV-2C, S/N N63790-03-0047

Continued from Form NVR-1 for Valve S/N N63790-03-0047

11. NWS Traveler # 08-153
    The valve was disassembled.

    Parts replaced during the repair include:
    Eductor Gasket: MC 56230461
    Three Inlet Studs: Cat ID 54400514 Heat Code KMY
    One outlet flange Heli-Coil: MC 25003083 Ht # HT-US-81B4

    After reassembly, the valve set-pressure was certified using steam as the lift medium.
    The valve was then jacked and lapped to restore seat integrity.
    A final steam seat tightness test was then done at 93% of set-pressure.

Date 2/24/09 Signed _____ (authorized representative) Name: Cesar V. Sierra (authorized representative)

Date 2/24/09 Signed _____ (inspector) Commissions: **NB# 8462, A,N,I NC# 1073** (National Board and jurisdiction no.)

PLAN No. 2-2233

Philip Smith 7/7/09.

CROSBY

CROSBY VALVE & GAGE COMPANY

WRENTHAM, MASS

MS-RV-2C, S/N N63790-03-0047.

FORM NV-1 FOR SAFETY AND SAFETY RELIEF VALVES — Q.C.-44D

As Required by the Provisions of the ASME Code Rules

DATA REPORT

Safety and Safety Relief Valves

1. Manufactured By Crosby Valve & Gage Company, 43 Kendrick St., Wrentham, MA 02093
Name and Address

Model No. HB-65-BP-FN Order No. N94275 Contract Date 4/24/79 National Board No. N/A

2. Manufactured For General Electric Company, 175 Curtner Ave., San Jose, CA 95125 Order No. 205-AJ986
Name and Address

3. Owner Washington Public Power Supply System, Richland, Washington 99352
Name and Address

4. Location of Plant Hanford Reservation, Richland, Washington 99352

5. Valve Identification MPL #B22-F013 Serial No. N63790-00-0047 Drawing No. DS-A-63790 Rev. C

Type Safety Relief (Safety, Safety Relief, Pilot, Power Actuated) Orifice Size R Inch Pipe Size -- Inch Inlet 6 Inch Outlet 10 Inch

6. Set Pressure (psig) 1175 575° F
Rated Temperature

Stamped Capacity 884,314 @ 3 % Overpressure -- Blowdown (psig) 2% to 11%

Hydrostatic Test (psig) Inlet 2370 Outlet 975 psig (Assembled Valve) 1100 psig (Body Only)
(Applicable to Valves for Closed Systems Only)

Pressure Retaining Pieces

	Serial No. Identification	Material Specification Including Type or Grade
a. Bar Stock & Forgings		
Body	N93183-35-0066	ASTM A105-71 Gr. II ASME SA105 Gr. II
Bonnet	N93407-35-0029	ASTM A105-71 Gr. II ASME SA105 Gr. II
b.		
Disc Insert	N93185-34-0078	ASME SA637 Gr. 718
Nozzle	N93184-32-0049	ASME SA182 Gr. F316
Disc Holder *K55484-35-0098	*N89714-34-0136	AMS 5662B
Spring Washers K62858-35-0029	K62856-35-0085 K62857-35-0050	ASTM A105-71 Gr. II ASME SA105 Gr. II
Adjusting Bolt	N93410-33-0054	ASME SA193 Gr. B6
Spindle Point K62873-37-0148	N89720-43-0147	ASTM A564-71 Type 630 ASME SA564 Type 630
c. Spring K62858-35-0029	*N89722-0003	ASTM A304-66 Gr. 4161 H
d. Bolting		ZX00380110
e. Spindle Ball K62873-37-0148	N93213-0215	Stoody #6
Thrust Bearing Adapter	N93409-32-0049	ASME SA193 Gr. B6
Bonnet Stud (BW5, I17)	N93207-0561 thru 0572	ASTM A193-71 Gr. B7 ASME SA193 Gr. B7
Bonnet Stud Nut (J87)	N93210-0781 thru 0792	ASME SA194 Gr. 2H
Inlet Stud (BW6)	N93216-0563 thru 0574	ASTM A193-71 Gr. B7 ASME SA193 Gr. B7
Inlet Stud Nut (BW8)	N93218-0567 thru 0578	ASTM A194-71 Gr. 2H ASME SA194 Gr. 2H

...ification consists of replacement of the Disc Insert, Nozzle, Bonnet Stud Nuts, ...justing Bolt, and Thrust Bearing Adapter, remachining of the Body, Spring Washers, Bonnet, and Spindle Assembly, and adding an Adjusting Bolt Button Assembly. New Serialization is required unless indicated by an asterisk. Original nameplate removed and new nameplate attached.

MS-RV-2C
N63790-00-0047

CERTIFICATE OF COMPLIANCE

We certify that the statements made in this report are correct and that this valve conforms to the rules of construction of the ASME Code for Nuclear Power Plant Components, Section III, Div. 1, 1971 Edition, Addenda No Addenda (Date), Code Case No. 1567 & 1711.

Class 1

Date 11-5-80 Signed Crosby Valve & Gage Co. (N Certificate Holder) by R.G. Cavanaugh

Our ASME Certificate of Authorization No. 1878 to use the NV symbol expires September 30, 1983 (Date).

CERTIFICATION OF DESIGN

Design information on file at Crosby Valve & Gage Company

Stress analysis report (Class 1 only) on file at Crosby Valve & Gage Company 43 Kendrick Street, Wrentham, Massachusetts 02093

Design specifications certified by[1] Boyd P. Brooks

PE State California Reg. No. 13655

Stress report certified by[1] W.D. Greenlaw

PE State Massachusetts Reg. No. 14784

[1]Signature not required - list name only.

CERTIFICATE OF SHOP INSPECTION

I, the undersigned, holding a valid commission issued by the National Board of Boiler and Pressure Vessel Inspectors and the State or Province of Massachusetts and employed by Factory Mutual Systems* of Norwood, Massachusetts have inspected the pump, or valve, described in this Data Report on 1/9, 1981 and state that to the best of my knowledge and belief, the N Certificate Holder has constructed this pump, or valve, in accordance with the ASME Code for Nuclear Power Plant Components.

By signing this certificate, neither the Inspector nor his employer makes any warrant, expressed or implied, concerning the equipment described in this Data Report. Furthermore, neither the Inspector nor his employer shall be liable in any manner for any personal injury or property damage or a loss of any kind arising from or connected with this inspection.

Date 1/9 1981.

Signed John Dunne (Inspector) Commissions MASS 126 F (Nat'l. Bd., State, Prov. and No.)

FOR INFORMATION ONLY

*Arkwright-Boston Manufacturers Mutual Insurance Company - Mutual Boiler & Machinery Div.

ZX00380111

PLAN No 2-2234

ENERGY NORTHWEST
People·Vision·Solutions

FORM NIS-2 OWNER'S REPORT FOR REPAIR/REPLACEMENT ACTIVITY
As Required By The Provisions Of The ASME Code Section XI

Date: 07/06/2009
Sheet: 1 Of 2
Unit: Not Applicable

1. Owner: Energy Northwest
Address: Columbia Generating Station, North Power Plant Loop, Richland, Washington, 99352
2. Plant: Columbia Generating Station
Address: Columbia Generating Station, North Power Plant Loop, Richland, Washington, 99352
3. (a) Work Performed By: Energy Northwest
(b) Repair/Replacement Organization P.O. No, Job No, etc.: Energy Northwest
(c) Type Code Symbol Stamp: Not Applicable
(d) Certificate Of Authorization No.: Not Applicable
(e) Expiration Date: Not Applicable
4. Identification Of System: Main Steam (MS) System
5. (a) Applicable Construction Code: ASME Section III, Code Class 1, 1971 Edition with Winter 1973 Addenda, Code Case: Note 1
(b) Applicable Edition Of ASME Section XI Used For Repair/Replacement Activity: 2001 Edition with 2003 Addenda
(c) Applicable ASME Section XI Case(s): None
6. Identification Of Components

Name Of Component	Name Of Manufacturer	Manufacturer's Serial No	National Board No	Other I.D.	Year Built	Corrected, Removed Or Installed	ASME Code Stamped (Yes Or No) Code Class
B22-G001C	WPPSS*	B22-G001C-P1	N/A	N/A	1983	See Item 7 Below	Yes, Code Class 1
MS-RV-3C	Crosby	N63790-03-0124	N/A	N/A	1981	Removed	Yes, Code Class 1
MS-RV-3C	Crosby	N63790-03-0053	N/A	N/A	1980	Installed	Yes, Code Class 1

7. Description Of Work Performed: Replaced existing relief valve MS-RV-3C The replacement work was performed as follows:

1) Removed twelve (12) existing standard (regular) nuts for the relief valve inlet joint.
2) Removed sixteen (16) existing standard (regular) bolts for the relief valve outlet joint.
3) Removed existing relief valve Serial No N63790-03-0124 (Previous/Original Serial No N63790-00-0124) with set pressure of 1185 Psig at rated temperature of 575°F.
4) Performed VT-1 visual examination on twelve (12) new "Superbolt" nuts for the relief valve inlet joint. VT-1 visual examination results acceptable.
5) Performed VT-1 visual examination on eight (8) new "Jackbolts" associated with new "Superbolt" nuts for the relief valve inlet joint. VT-1 visual examination results acceptable.
6) Performed VT-1 visual examination on two (2) new studs for the relief valve inlet joint. VT-1 visual examination results acceptable.
7) Installed replacement relief valve with Serial No N63790-03-0053 (Previous/Original Serial No N63790-00-0053) with set pressure of 1185 Psig at rated temperature of 575° F.
8) Installed VT-1 visually examined twelve (12) new "Superbolts" nuts for the relief valve inlet joint. Note - None of the existing standard (regular) nuts were reused.
9) Installed VT-1 visually examined eight (8) new "Jackbolts" associated with new "Superbolt" nuts for the relief valve inlet joint.
10) Installed VT-1 visually examined two (2) new studs for the relief valve inlet joint.
11) Installed sixteen (16) new "Superbolt" bolts for the relief valve outlet joint. Note - None of the existing standard (regular) bolts were reused.
12) Performed VT-2 visual examination during pressure test to confirm pressure boundary integrity of the relief valve inlet joint. No evidence of leakage during the pressure test.

Continued On Sheet 2 of 2

PLAN No 2-2234

ENERGY NORTHWEST
People · Vision · Solutions

FORM NIS-2 OWNER'S REPORT FOR REPAIR/REPLACEMENT ACTIVITY (Back)

8 Tests Conducted: Hydrostatic [ ] **Pneumatic** [ ] **Nominal Operating Pressure** [ ] **Other** [*]
Exempt [ ] **Test Pressure:** 1020 Psig **Test Temperature:** 165° F

9. Remarks (Applicable Manufacturer's Data Reports to be attached): 1) See attached NVR-1 report for replacement relief valve Serial No N63790-03-0053 (Previous/Original Serial No N63790-00-0053), 2) See attached R-4 report for replacement relief valve Serial No N63790-03-0053 (Previous/Original Serial No N63790-00-0053), 3) See attached NV-1 Code Data Report for previous/original relief valve Serial No N63790-00-0053, 4) * The test pressure and the test temperature on the relief valve inlet joint was recorded during ASME Section XI pressure test which was performed in accordance with PPM No OSP-RPV-R801 "Reactor Pressure Vessel Leakage Test".

CERTIFICATE OF COMPLIANCE

I certify that the statements made in this Owner's Report are correct and that this conforms to the requirements of the ASME Code, Section XI.
Type Code Symbol Stamp: Not Applicable
Certificate Of Authorization No.: Not Applicable
Expiration Date: Not Applicable

Prepared By Kuldip Singh - Program Lead Engineer (PLE) ***Signed By*** Kuldip Singh - Program Lead Engineer (PLE)

Date 7/7/09 ***Date*** 7/7/09

CERTIFICATE OF INSERVICE INSPECTION

I, the undersigned, holding a valid commission issued by the National Board of Boiler and Pressure Vessel Inspectors and the State of Washington ***and employed by*** Hartford Steam Boiler Of Connecticut of Hartford, Connecticut ***have inspected the components described in this Owner's Report during the period*** 4/17/2009 ***to*** 7/14/2009 ***and state to the best of my knowledge and belief, the Owner has performed examinations and taken corrective measures described in this Owner's Report in accordance with the requirements of the ASME Code, Section XI.***
By signing this certificate neither the Inspector nor his employer makes any warranty, expressed or implied, concerning the examinations and corrective measures described in this Owner's Report. Furthermore, neither the Inspector nor his employer shall be liable in any manner for any personal injury or property damage or a loss of any kind arising from or connected with this inspection.

Inspector's Signature ***Commissions*** 13172 WANI
National Board, State, and Endorsements

Date 7/14/2009

PLAN No 2-2234

ENERGY NORTHWEST
People·Vision·Solutions

FORM NIS-2 OWNER'S REPORT FOR REPAIR/REPLACEMENT ACTIVITY
As Required By The Provisions Of The ASME Code Section XI

Date: 07/06/2009
Sheet: 2 Of 2
Unit: Not Applicable

1. **Owner:** Energy Northwest
   Address: Columbia Generating Station, North Power Plant Loop, Richland, Washington, 99352
2. **Plant:** Columbia Generating Station
   Address: Columbia Generating Station, North Power Plant Loop, Richland, Washington, 99352
3. **(a) Work Performed By:** Energy Northwest
   (b) Repair/Replacement Organization P.O. No, Job No, etc.: Energy Northwest
   (c) Type Code Symbol Stamp: Not Applicable
   (d) Certificate Of Authorization No.: Not Applicable
   (e) Expiration Date: Not Applicable
4. **Identification Of System:** Main Steam (MS) System
5. **(a) Applicable Construction Code:** ASME Section III, Code Class 1, 1971 Edition with Winter 1973 Addenda, Code Case: Note 1
   (b) Applicable Edition Of ASME Section XI Used For Repair/Replacement Activity: 2001 Edition with 2003 Addenda
   (c) Applicable ASME Section XI Case(s): None
6. **Identification Of Components**

Name Of Component	Name Of Manufacturer	Manufacturer's Serial No	National Board No	Other I.D.	Year Built	Corrected, Removed Or Installed	ASME Code Stamped (Yes Or No) Code Class
B22-G001C	WPPSS*	B22-G001C-P1	N/A	N/A	1983	See Item 7 Below	Yes, Code Class 1
MS-RV-3C	Crosby	N63790-03-0124	N/A	N/A	1981	Removed	Yes, Code Class 1
MS-RV-3C	Crosby	N63790-03-0053	N/A	N/A	1980	Installed	Yes, Code Class 1

7. Description Of Work Performed: Notes Continuation From Sheet 1 of 2

NOTES -

1) The applicable ASME Code Cases, if any are listed on the ASME Code Data Reports.
2) * Company name changed from Washington Public Power Supply System (WPPSS) to Energy Northwest (EN) in 1999.
3) The existing ASME Code Stamped piping system in which the replacement valve Serial No N63790-03-0053 (Previous/Original Serial No N63790-00-0053) was installed is Main Steam (MS) piping system B22-G001C-P1. This piping system is certified to comply with ASME Section III, Code Class 1, 1971 Edition with Winter 1973 Addenda requirements.
4) The existing ASME Code Stamped piping system applicable to the relief valve outlet side is certified to comply with ASME Section III, Code Class 3, 1971 Edition with Winter 1973 Addenda requirements.
5) The replacement relief valve Serial No N63790-03-0053 (Previous/Original Serial No N63790-00-0053) is certified to comply with ASME Section III, Code Class 1, 1971 Edition with no Addenda requirements.
6) The relief valve serial number in parenthesis is the old (previous/original) serial numbers. The relief valve serial number with out the parenthesis is the serial numbers of relief valve previously modified (upgraded) by NWS Technologies, LLC, 131 Venture Boulevard, Spartanburg, SC 29301. The modification (upgrading) work on the relief valve was performed in accordance with NWS Technologies, LLC VR and NR programs.

Philip Sings
7/7/09

PLAN NO. Z-2234

FORM NVR-1 REPORT OF REPAIR ☒ REPLACEMENT ☒ Corrected
OF NUCLEAR PRESSURE RELIEF DEVICES

1. Work performed by: **NWS Technologies, LLC** Purchase Order # 326692 7/7/09.
131 Venture Boulevard, Spartanburg, SC 29306

2. Work performed for: Energy Northwest - Columbia Generating Station

3/4. Owner - name, address and identification of nuclear power plant: Energy Northwest - Columbia Generating Station, North Power Plant Loop, Richland, WA 99352-0968

5. a: Repaired pressure relief device: Main Steam Safety Relief Valve
b: Name of manufacturer: Crosby Valve & Gage Co.
c: Identifying nos.

HB-65-BP-FN	new s/n: N63790-03-0053	N/A	steam	6 x 10	1980
(type)	(mfr's S/N)	(NB#)	(service)	(size)	(yr.built)

d: Construction Code:

ASME Sec. III Div. 1	1971	N/A	N/A	1
(name/section/division)	(edition)	(addenda)	(Code Cases(s))	(Code Class)

6. ASME Code Section XI applicable for inservice inspection: 2001 (edition) 2003 (addenda) N/A (Code Case(s))

7. ASME Code Section XI used for repairs, replacements: 2001 (edition) 2003 (addenda) N/A (Code Case(s))

8. Construction Code used for repairs, replacements: 1971 (edition) N/A (addenda) N/A (Code Case(s))

9. Design responsibilities: N/A MS-RV-3C, S/N N63790-03-0053

10. Opening pressure: 1185 psig
Set-pressure adjustment made at: NWS Technologies, LLC using steam

11. Description of work (include name and identifying number of replacement parts): See Form R-4 Report Supplementary Sheet

12. Remarks: See attached Form R-4: Corrected Bellows Assembly Heat Number.

CERTIFICATE OF COMPLIANCE

I, Cesar V. Sierra certify that to the best of my knowledge and belief the statements made in this report are correct and the repair, modification or replacement of the pressure relief devices described above conforms to Section XI of the ASME Code and the National Board Inspection Code "VR" and "NR" rules.
National Board Certificate of Authorization No. 632 to use the "VR" stamp expires April 3, 2009.
National Board Certificate of Authorization No. 81 to use the "NR" stamp expires April 9, 2009.

3/19/09	NWS Technologies, LLC	[signature]	Manager, QA
Date	Repair Organization	Authorized representative	Title

CERTIFICATE OF INSPECTION

I, **Charles F. Toegel Jr.** holding a valid commission issued by The National Board of Boiler and Pressure Vessel Inspectors and certificate of competency issued by the jurisdiction of **North Carolina** and employed by **Hartford Steam Boiler of CT** of Hartford, CT have inspected the repair, modification or replacement described in this report on 19 MAR 2009 and state that to the best of my knowledge and belief, this repair, modification or replacement has been completed in accordance with Section XI of the of the ASME Code and the National Board Inspection Code "VR" and "NR" rules.
By signing this certificate, neither the undersigned nor my employer makes any warranty, expressed or implied, concerning this repair, modification or replacement described in this report. Furthermore, neither the undersigned nor my employer shall be liable in any manner for any personal injury, property damage or loss of any kind arising from or connected with this inspection.

3/19/09	[signature]	NB # 8462, A, N, I NC# 1073
Date	Inspector's Signature	Commissions (NB (incl endorsements), jurisdiction,& no.)

PLAN No. 2-2234

7/7/79

CROSBY

CROSBY VALVE & GAGE COMPANY
WRENTHAM, MASS

MS-RV-3C, S/N N63790-03-0053

FORM NV-1 FOR SAFETY AND SAFETY RELIEF VALVES Q.C.-44D
As Required by the Provisions of the ASME Code Rules

FOR INFORMATION ONLY

DATA REPORT
Safety and Safety Relief Valves

1. Manufactured By Crosby Valve & Gage Company, 43 Kendrick St., Wrentham, MA 02093
Name and Address

Model No. HB-65-BP-FN Order No. N94275 Contract Date 4/24/79 National Board No. N/A

2. Manufactured For General Electric Company, 175 Curtner Ave., San Jose, CA 95125 Order No. 205-AJ986
Name and Address

3. Owner Washington Public Supply System, Richland, Washington 99352
Name and Address

4. Location of Plant Hanford Reservation, Richland, Washington 99352

5. Valve Identification MPL #B22-F013 Serial No. N63790-00-0053 Drawing No. DS-A-63790 Rev. C

Type Safety Relief (Safety, Safety Relief, Pilot, Power Actuated) Orifice Size R Inch Pipe Size -- Inch Inlet 6 Inch Outlet 10 Inch

6. Set Pressure (psig) 1185 575° F
Rated Temperature

Stamped Capacity 891,750 @ 3 % Overpressure -- Blowdown (psig) 2% to 11%

Hydrostatic Test (psig) Inlet 2370 Outlet 975 psig (Assembled Valve) 1100 psig (Body Only)
(Applicable to Valves for Closed Systems Only)

Pressure Retaining Pieces

	Serial No. Identification	Material Specification Including Type or Grade
a. Bar Stock & Forgings		
Body	N93183-35-0072	ASTM A105-71 Gr. II ASME SA105 Gr. II
Bonnet	N93407-35-0035	ASTM A105-71 Gr. II ASME SA105 Gr. II
b. Disc Insert	N93185-34-0085	ASME SA637 Gr. 718
Nozzle	N93184-33-0057	ASME SA182 Gr. F316
Disc Holder *K55484-35-0082	*N89714-34-0089	AMS 5662B
Spring Washers K62858-35-0035	K62856-35-0091 K62857-35-0056	ASTM A105-71 Gr. II ASME SA105 Gr. II
Adjusting Bolt	N93410-33-0060	ASME SA193 Gr. B6
Spindle Point K62873-35-0053	*N89720-34-0085	ASTM A564-71 Type 630 ASME SA564 Type 630
c. Spring K62858-35-0035	*N89722-0011	ASTM A304-66 Gr. 4161H
d. Bolting		ZX00380127
e. Spindle Ball K62873-35-0053	N93213-0053	Stellite #6
Thrust Bearing Adapter	N93409-32-0055	ASME SA193 Gr. B6
Bonnet Stud (I17, BW5)	N93207-0633 thru 0644	ASTM A193-71 Gr. B7 ASME SA193 Gr. B7
Bonnet Stud Nut (J87)	N93210-0853 thru 0864	ASME SA194 Gr. 2H
Inlet Stud (BW6)	N93216-0635 thru 0646	ASTM A193-71 Gr. B7 ASME SA193 Gr. B7
Inlet Stud Nut (BW8)	N93218-0639 thru 0650	ASTM A194-71 Gr. 2H ASME SA194 Gr. 2H
Adjusting Bolt Button	N93411-33-0062	ASME SA193 Gr. B6

Valve originally built against Crosby Order No. N103600, Assembly No. N56000. Valve modification consists of replacement of the Disc Insert, Nozzle, Bonnet Stud Nuts, Adjusting Bolt, and Thrust Bearing Adapter, remachining of the Body, Spring Washers, Bonnet, and Spindle Assembly, and adding an Adjusting Bolt Button Assembly. New serialization is required unless indicated by an asterisk.
Original nameplate removed and new nameplate attached.

N63790-00-0053

CERTIFICATE OF COMPLIANCE

We certify that the statements made in this report are correct and that this valve conforms to the rules of construction of the ASME Code for Nuclear Power Plant Components, Section III, Div. 1, 1971 Edition, Addenda No Addenda (Date), Code Case No. 1567 & 1711.

Class 1

Date 11-5-80 Signed Crosby Valve & Gage Co. (N Certificate Holder) by R. G. Parrent

Our ASME Certificate of Authorization No. 1878 to use the NV symbol expires September 30, 1983 (Date).

CERTIFICATION OF DESIGN

Design information on file at Crosby Valve & Gage Company

Stress analysis report (Class 1 only) on file at Crosby Valve & Gage Company 43 Kendrick Street, Wrentham, Massachusetts 02093

Design specifications certified by[1] Boyd P. Brooks

PE State California Reg. No. 13655

Stress report certified by[1] W. D. Greenlaw

PE State Massachusetts Reg. No. 14784

[1]Signature not required - list name only.

FOR INFORMATION ONLY

CERTIFICATE OF SHOP INSPECTION

I, the undersigned, holding a valid commission issued by the National Board of Boiler and Pressure Vessel Inspectors and the State or Province of Massachusetts and employed by Factory Mutual Systems* of Norwood, Massachusetts have inspected the pump, or valve, described in this Data Report on 11/21, 1980 and state that to the best of my knowledge and belief, the N Certificate Holder has constructed this pump, or valve, in accordance with the ASME Code for Nuclear Power Plant Components.

By signing this certificate, neither the Inspector nor his employer makes any warrant, expressed or implied, concerning the equipment described in this Data Report. Furthermore, neither the Inspector nor his employer shall be liable in any manner for any personal injury or property damage or a loss of any kind arising from or connected with this inspection.

Date 11/21 1980.

Signed John [illegible] (Inspector) Commissions MASS 1266 (Nat'l. Bd., State, Prov. and No.)

*Arkwright-Boston Manufacturers Mutual Insurance Company - Mutual Boiler & Machinery Div.

ENERGY NORTHWEST
People·Vision·Solutions

FORM NIS-2 OWNER'S REPORT FOR REPAIR/REPLACEMENT ACTIVITY
As Required By The Provisions Of The ASME Code Section XI

1. Owner: Energy Northwest
Address: Columbia Generating Station, North Power Plant Loop, Richland, Washington, 99352
2. Plant: Columbia Generating Station
Address: Columbia Generating Station, North Power Plant Loop, Richland, Washington, 99352

Date: 07/15/2009
Sheet: 1 Of 2
Unit: Not Applicable

3. (a) Work Performed By: Energy Northwest
(b) Repair/Replacement Organization P.O. No, Job No, etc.: Energy Northwest
(c) Type Code Symbol Stamp: Not Applicable
(d) Certificate Of Authorization No.: Not Applicable
(e) Expiration Date: Not Applicable
4. Identification Of System: Main Steam (MS) System
5. (a) Applicable Construction Code: ASME Section III, Code Class 1, 1971 Edition with Winter 1973 Addenda, Code Case: Note 1
(b) Applicable Edition Of ASME Section XI Used For Repair/Replacement Activity: 2001 Edition with 2003 Addenda
(c) Applicable ASME Section XI Case(s): None
6. Identification Of Components

Name Of Component	Name Of Manufacturer	Manufacturer's Serial No	National Board No	Other I.D.	Year Built	Corrected, Removed Or Installed	ASME Code Stamped (Yes Or No) Code Class
B22-G001C	WPPSS*	B22-G001C-P1	N/A	N/A	1983	See Item 7 Below	Yes, Code Class 1
MS-RV-5C	Crosby	N63790-03-0136	N/A	N/A	1973	Removed	Yes, Code Class 1
MS-RV-5C	Crosby	N63790-03-0059	N/A	N/A	1980	Installed	Yes, Code Class 1

7. Description Of Work Performed: Replaced existing relief valve MS-RV-5C The replacement work was performed as follows:

1) Removed twelve (12) existing standard (regular) nuts for the relief valve inlet joint.
2) Removed sixteen (16) existing standard (regular) bolts for the relief valve outlet joint.
3) Removed existing relief valve Serial No N63790-03-0136 (Previous/Original Serial No N63790-00-0136) with set pressure of 1205 Psig at rated temperature of 575°F.
4) Performed VT-1 visual examination on twelve (12) new "Superbolt" nuts for the relief valve inlet joint. VT-1 visual examination results acceptable.
5) Performed VT-1 visual examination on eight (8) new "Jackbolts" associated with new "Superbolt" nuts for the relief valve inlet joint. VT-1 visual examination results acceptable.
6) Installed replacement relief valve with Serial No N63790-03-0059 (Previous/Original Serial No N63790-00-0059) with set pressure of 1205 Psig at rated temperature of 575° F.
7) Installed VT-1 visually examined twelve (12) new "Superbolts" nuts for the relief valve inlet joint. Note - None of the existing standard (regular) nuts were reused.
8) Installed VT-1 visually examined eight (8) new "Jackbolts" associated with new "Superbolt" nuts for the relief valve inlet joint.
9) Installed sixteen (16) new standard (regular) bolts for the relief valve outlet joint. Note - None of the existing standard (regular) bolts were reused.
10) Performed VT-2 visual examination during pressure test to confirm pressure boundary integrity of the relief valve inlet joint. No evidence of leakage during the pressure test.

NOTES -

1) The applicable ASME Code Cases, if any are listed on the ASME Code Data Reports.
2) * Company name changed from Washington Public Power Supply System (WPPSS) to Energy Northwest (EN) in 1999.

Continued On Sheet 2 of 2

PLAN No 2-2235

ENERGY NORTHWEST
People · Vision · Solutions

FORM NIS-2 OWNER'S REPORT FOR REPAIR/REPLACEMENT ACTIVITY (Back)

8 Tests Conducted: Hydrostatic ☐ **Pneumatic** ☐ **Nominal Operating Pressure** ☐ **Other** ☐
Exempt ☐ **Test Pressure:** 1020 Psig **Test Temperature:** 165° F

9. Remarks (Applicable Manufacturer's Data Reports to be attached): 1) See attached NVR-1 report for replacement relief valve Serial No N63790-03-0059 (Previous/Original Serial No N63790-00-0059), 2) See attached R-4 report for replacement relief valve Serial No N63790-03-0059 (Previous/Original Serial No N63790-00-0059), 3) See attached NV-1 Code Data Report for previous/original relief valve Serial No N63790-00-0059, 4) * The test pressure and the test temperature on the relief valve inlet joint was recorded during ASME Section XI pressure test which was performed in accordance with PPM No OSP-RPV-R801 "Reactor Pressure Vessel Leakage Test".

CERTIFICATE OF COMPLIANCE

I certify that the statements made in this Owner's Report are correct and that this conforms to the requirements of the ASME Code, Section XI.
Type Code Symbol Stamp: Not Applicable
Certificate Of Authorization No.: Not Applicable
Expiration Date: Not Applicable

Prepared By Kuldip Singh ***Signed By*** Kuldip Singh
Kuldip Singh - Program Lead Engineer (PLE) Kuldip Singh - Program Lead Engineer (PLE)
Date 7/15/09 ***Date*** 7/15/09

CERTIFICATE OF INSERVICE INSPECTION

I, the undersigned, holding a valid commission issued by the National Board of Boiler and Pressure Vessel Inspectors and the State of Washington ***and employed by*** Hartford Steam Boiler Of Connecticut of Hartford, Connecticut ***have inspected the components described in this Owner's Report during the period*** 4/20/2009 ***to*** 7/21/2009 ***and state to the best of my knowledge and belief, the Owner has performed examinations and taken corrective measures described in this Owner's Report in accordance with the requirements of the ASME Code, Section XI.***
By signing this certificate neither the Inspector nor his employer makes any warranty, expressed or implied, concerning the examinations and corrective measures described in this Owner's Report. Furthermore, neither the Inspector nor his employer shall be liable in any manner for any personal injury or property damage or a loss of any kind arising from or connected with this inspection.

Inspector's Signature ***Commissions*** 13172 WANI
National Board, State, and Endorsements

Date 7/21/2009

PLAN No 2-2235

ENERGY NORTHWEST
People · Vision · Solutions

FORM NIS-2 OWNER'S REPORT FOR REPAIR/REPLACEMENT ACTIVITY
As Required By The Provisions Of The ASME Code Section XI

Date: 07/15/2009
Sheet: 2 Of 2
Unit: Not Applicable

1. **Owner:** Energy Northwest
   Address: Columbia Generating Station, North Power Plant Loop, Richland, Washington, 99352
2. **Plant:** Columbia Generating Station
   Address: Columbia Generating Station, North Power Plant Loop, Richland, Washington, 99352
3. **(a) Work Performed By:** Energy Northwest
   (b) Repair/Replacement Organization P.O. No, Job No, etc.: Energy Northwest
   (c) Type Code Symbol Stamp: Not Applicable
   (d) Certificate Of Authorization No.: Not Applicable
   (e) Expiration Date: Not Applicable
4. **Identification Of System:** Main Steam (MS) System
5. **(a) Applicable Construction Code:** ASME Section III, Code Class 1, 1971 Edition with Winter 1973 Addenda, Code Case: Note 1
   (b) Applicable Edition Of ASME Section XI Used For Repair/Replacement Activity: 2001 Edition with 2003 Addenda
   (c) Applicable ASME Section XI Case(s): None
6. **Identification Of Components**

Name Of Component	Name Of Manufacturer	Manufacturer's Serial No	National Board No	Other I.D.	Year Built	Corrected, Removed Or Installed	ASME Code Stamped (Yes Or No) Code Class
B22-G001C	WPPSS*	B22-G001C-P1	N/A	N/A	1983	See Item 7 Below	Yes, Code Class 1
MS-RV-5C	Crosby	N63790-03-0136	N/A	N/A	1973	Removed	Yes, Code Class 1
MS-RV-5C	Crosby	N63790-03-0059	N/A	N/A	1980	Installed	Yes, Code Class 1

7. Description Of Work Performed: Notes Continuation From Sheet 1 of 2

NOTES

3) The existing ASME Code Stamped piping system in which the replacement valve Serial No N63790-03-0059 (Previous/Original Serial No N63790-00-0059) was installed is Main Steam (MS) piping system B22-G001C-P1. This piping system is certified to comply with ASME Section III, Code Class 1, 1971 Edition with Winter 1973 Addenda requirements.

4) The existing ASME Code Stamped piping system applicable to the relief valve outlet side is certified to comply with ASME Section III, Code Class 3, 1971 Edition with Winter 1973 Addenda requirements.

5) The replacement relief valve Serial No N63790-03-0059 (Previous/Original Serial No N63790-00-0059) is certified to comply with ASME Section III, Code Class 1, 1971 Edition with no Addenda requirements.

6) The relief valve serial number in parenthesis is the old (previous/original) serial numbers. The relief valve serial number with out the parenthesis is the serial numbers of relief valve previously modified (upgraded) by NWS Technologies, LLC, 131 Venture Boulevard, Spartanburg, SC 29301. The modification (upgrading) work on the relief valve was performed in accordance with NWS Technologies, LLC VR and NR programs.

Dilip Singh
7/15/09

PLAN NO. 2-2235.

FORM NVR-1 REPORT OF REPAIR ☒ REPLACEMENT ☒
OF NUCLEAR PRESSURE RELIEF DEVICES

1. Work performed by: **NWS Technologies, LLC** Purchase Order # 326692 7/14/07
131 Venture Boulevard, Spartanburg, SC 29306

2. Work performed for: Energy Northwest - Columbia Generating Station

3/4. Owner - name, address and identification of nuclear power plant: Energy Northwest - Columbia Generating Station, North Power Plant Loop, Richland, WA 99352-0968

5. a: Repaired pressure relief device: Main Steam Safety Relief Valve
b: Name of manufacturer: Crosby Valve & Gage Co.
c: Identifying nos.

HB-65-BP-FN	new s/n: N63790-03-0059	N/A	steam	6 x 10	1980
(type)	(mfr's S/N)	(NB#)	(service)	(size)	(yr.built)

d: Construction Code:

ASME Sec. III Div. 1	1971	N/A	N/A	1
(name/section/division)	(edition)	(addenda)	(Code Cases(s))	(Code Class)

6. ASME Code Section XI applicable for inservice inspection:

2001	2003	N/A
(edition)	(addenda)	(Code Case(s))

7. ASME Code Section XI used for repairs, replacements:

2001	2003	N/A
(edition)	(addenda)	(Code Case(s))

8. Construction Code used for repairs, replacements:

1971	N/A	N/A
(edition)	(addenda)	(Code Case(s))

9. Design responsibilities: N/A MS-RV-SC, S/N N63790-03-0059.

10. Opening pressure: 1205 psig
Set-pressure adjustment made at: NWS Technologies, LLC using steam

11. Description of work (include name and identifying number of replacement parts): See Form R-4 Report Supplementary Sheet

12. Remarks:

CERTIFICATE OF COMPLIANCE

I, Cesar V. Sierra certify that to the best of my knowledge and belief the statements made in this report are correct and the repair, modification or replacement of the pressure relief devices described above conforms to Section XI of the ASME Code and the National Board Inspection Code "VR" and "NR" rules.
National Board Certificate of Authorization No. 632 to use the "VR" stamp expires April 3, 2009.
National Board Certificate of Authorization No. 81 to use the "NR" stamp expires April 9, 2009.

2/24/09	NWS Technologies, LLC		Manager, QA
Date	Repair Organization	Authorized representative	Title

CERTIFICATE OF INSPECTION

I, **Charles F. Toegel Jr.** holding a valid commission issued by The National Board of Boiler and Pressure Vessel Inspectors and certificate of competency issued by the jurisdiction of **North Carolina** and employed by **Hartford Steam Boiler of CT** of Hartford, CT have inspected the repair, modification or replacement described in this report on 24 FEB 2009 and state that to the best of my knowledge and belief, this repair, modification or replacement has been completed in accordance with Section XI of the of the ASME Code and the National Board Inspection Code "VR" and "NR" rules.
By signing this certificate, neither the undersigned nor my employer makes any warranty, expressed or implied, concerning this repair, modification or replacement described in this report. Furthermore, neither the undersigned nor my employer shall be liable in any manner for any personal injury, property damage or loss of any kind arising from or connected with this inspection.

2/24/09		NB # 8462, A, N, I NC# 1073
Date	Inspector's Signature	Commissions (NB (incl endorsements), jurisdiction,& no.)

PLAN No. 2-2235

FORM R-4 REPORT SUPPLEMENTARY SHEET (NVR-1)
In accordance with provisions of the National Board Inspection Code

1. Work performed by: **NWS Technologies, LLC** Valve S/N: **N63790-03-0059**
131 Venture Boulevard, Spartanburg, SC 29306

2. Owner: Energy Northwest - Columbia Generating Station

3. Location of installation Energy Northwest - Columbia Generating Station
North Power Plant Loop, Richland, WA 99352-0968

Purchase Order # 326692

Reference Line No. HS-RV-5C, S/N N63790-03-0059

Continued from Form NVR-1 for Valve S/N N63790-03-0059

11. NWS Traveler # 08-156
The valve was disassembled.

Parts replaced during the repair include:
Eductor Gasket: MC 56230461
Nozzle: S/N N97498-52-0163
Three inlet studs: Cat ID 54400514 Heat Code F973
Two inlet studs: Cat ID 54400514 Heat Code 1V54
One inlet stud: Cat ID 54400514 Heat Code KMY
One inlet flange Heli-Coil: Part No: 4190-22CN2062 Ht # US-88M9
Two disc holder pins: MC54407794 Part No. 082598
Nozzle ring set screw: MC25520005 Ht #4682D

After reassembly, the valve set-pressure was certified using steam as the lift medium.
The valve was then jacked and lapped to restore seat integrity.
A final steam seat tightness test was then done at 93% of set-pressure.

Date 2/24/09 Signed (authorized representative) Name: Cesar V. Sierra (authorized representative)

Date 2/24/09 Signed (inspector) Commissions: **NB# 8462, A,N,I NC# 1073** (National Board and jurisdiction no.)

PLAN No. 2-2235

CROSBY

CROSBY VALVE & GAGE COMPANY
WRENTHAM, MASS

MS-RV-5C, S/N N63790-03-0059

FORM NV-1 FOR SAFETY AND SAFETY RELIEF VALVES — Q.C.-44D
As Required by the Provisions of the ASME Code Rules

DATA REPORT
Safety and Safety Relief Valves

7/14/09

1. Manufactured By Crosby Valve & Gage Company, 43 Kendrick St., Wrentham, MA 02093
Name and Address

Model No. HB-65-BP-FN Order No. N94275 Contract Date 4/24/79 National Board No. N/A

2. Manufactured For General Electric Company, 175 Curtner Ave., San Jose, CA 95125 Order No. 205-AJ986
Name and Address

3. Owner Washington Public Power Supply System, Richland, Washington 99352
Name and Address

4. Location of Plant Hanford Reservation, Richland, Washington 99352

5. Valve Identification MPL #B22-F013 Serial No. N63790-00-0059 Drawing No. DS-A-63790 Rev. C

Type Safety Relief (Safety, Safety Relief, Pilot, Power Actuated) Orifice Size R Inch Pipe Size -- Inch Inlet 6 Inch Outlet 10 Inch

6. Set Pressure (psig) 1205 575° F (Rated Temperature)

Stamped Capacity 906,621 @ 3 %Overpressure -- Blowdown (psig) 2% to 11%

Hydrostatic Test (psig) Inlet 2370 Outlet 975 psig (Assembled Valve) 1100 psig (Body Only)
(Applicable to Valves for Closed Systems Only)

Pressure Retaining Pieces

	Serial No. Identification	Material Specification Including Type or Grade
a. Bar Stock & Forgings		
Body	N93183-35-0078	ASTM A105-71 Gr. II ASME SA105 Gr. II
Bonnet	N93407-35-0041	ASTM A105-71 Gr. II ASME SA105 Gr. II
b. Disc Insert	N93185-34-0091	ASME SA637 Gr. 718
Nozzle	N93184-33-0063	ASME SA182 Gr. F316
Disc Holder *K55484-35-0085	*N89714-34-0105	AMS 5662B
Spring Washers K62858-35-0041	K62856-35-0097 K62857-35-0062	ASTM A105-71 Gr. II ASME SA105 Gr. II
Adjusting Bolt	N93410-33-0066	ASME SA193 Gr. B6
Spindle Point K62873-35-0059	*N89720-34-0067	ASTM A564-71 Type 630 ASME SA564 Type 630
c. Spring K62858-35-0041	*N89722-0017	ASTM A304-66 Gr. 4161H
d. Bolting		
e. Spindle Ball K62873-35-0059	N93213-0059	Stellite #6
Thrust Bearing Adapter	N93409-32-0061	ASME SA193 Gr. B6
Bonnet Stud (BW5)	N93207-0705 thru 0716	ASTM A193-71 Gr. B7 ASME SA193 Gr. B7
Bonnet Stud Nut (J87)	N93210-0925 thru 0936	ASME SA194 Gr. 2H
Inlet Stud (BW6)	N93216-0707 thru 0718	ASTM A193-71 Gr. B7 ASME SA193 Gr. B7
Inlet Stud Nut (BW8)	N93218-0711 thru 0722	ASTM A194-71 Gr. 2H ASME SA194 Gr. 2H

ZX00380149

Adjusting Nut Button N93411-35-0068 ASME SA182 Gr. F316

Valve originally built against Crosby Order No. N103600, Assembly No. N56000. Valve modification consists of replacement of the Disc Insert, Nozzle, Bonnet Stud Nuts, Adjusting Bolt, and Thrust Bearing Adapter, remachining of the Body, Spring Washers, Bonnet, and Spindle Assembly, and adding an Adjusting Bolt Button Assembly. New Serialization is required unless indicated by an asterisk.
Original nameplate removed and new nameplate attached.

N103790-00-0059

CERTIFICATE OF COMPLIANCE

We certify that the statements made in this report are correct and that this valve conforms to the rules of construction of the ASME Code for Nuclear Power Plant Components, Section III, Div. 1, 1971 Edition, Addenda No Addenda (Date), Code Case No. 1567 & 1711.

Class 1

Date 11-5-80 Signed Crosby Valve & Gage Co. by R.A. Cusmock
(N Certificate Holder)

Our ASME Certificate of Authorization No. 1878 to use the NV symbol expires September 30, 1983 (Date).

CERTIFICATION OF DESIGN

Design information on file at Crosby Valve & Gage Company

Stress analysis report (Class 1 only) on file at Crosby Valve & Gage Company
43 Kendrick Street, Wrentham, Massachusetts 02093

Design specifications certified by[1] Boyd P. Brooks

PE State California Reg. No. 13655

Stress report certified by[1] W.D. Greenlaw

PE State Massachusetts Reg. No. 14784

[1]Signature not required - list name only.

FOR INSPECTION ONLY

CERTIFICATE OF SHOP INSPECTION

I, the undersigned, holding a valid commission issued by the National Board of Boiler and Pressure Vessel Inspectors and the State or Province of Massachusetts and employed by Factory Mutual Systems* of Norwood, Massachusetts have inspected the pump, or valve, described in this Data Report on 11/18, 1980 and state that to the best of my knowledge and belief, the N Certificate Holder has constructed this pump, or valve, in accordance with the ASME Code for Nuclear Power Plant Components.

By signing this certificate, neither the Inspector nor his employer makes any warrant, expressed or implied, concerning the equipment described in this Data Report. Furthermore, neither the Inspector nor his employer shall be liable in any manner for any personal injury or property damage or a loss of any kind arising from or connected with this inspection.

Date 11/18 1980.

Signed John E. Mitchell (Inspector) Commissions MASS 1266 (Nat'l. Bd., State, Prov. and No.)

*Arkwright-Boston Manufacturers Mutual Insurance Company - Mutual Boiler & Machinery Div.

ZX00380150

PLAN No 2-2236

ENERGY NORTHWEST
People·Vision·Solutions

FORM NIS-2 OWNER'S REPORT FOR REPAIR/REPLACEMENT ACTIVITY
As Required By The Provisions Of The ASME Code Section XI

Date: 07/15/2009
Sheet: 1 Of 2
Unit: Not Applicable

1. **Owner:** Energy Northwest
   Address: Columbia Generating Station, North Power Plant Loop, Richland, Washington, 99352
2. **Plant:** Columbia Generating Station
   Address: Columbia Generating Station, North Power Plant Loop, Richland, Washington, 99352
3. **(a) Work Performed By:** Energy Northwest
   (b) Repair/Replacement Organization P.O. No, Job No, etc.: Energy Northwest
   (c) Type Code Symbol Stamp: Not Applicable
   (d) Certificate Of Authorization No.: Not Applicable
   (e) Expiration Date: Not Applicable
4. **Identification Of System:** Main Steam (MS) System
5. **(a) Applicable Construction Code:** ASME Section III, Code Class 1, 1971 Edition with Winter 1973 Addenda, Code Case: Note 1
   (b) Applicable Edition Of ASME Section XI Used For Repair/Replacement Activity: 2001 Edition with 2003 Addenda
   (c) Applicable ASME Section XI Case(s): None
6. **Identification Of Components**

Name Of Component	Name Of Manufacturer	Manufacturer's Serial No	National Board No	Other I.D.	Year Built	Corrected, Removed Or Installed	ASME Code Stamped (Yes Or No) Code Class
B22-G001D	WPPSS*	B22-G001D-P1	N/A	N/A	1983	See Item 7 Below	Yes, Code Class 1
MS-RV-1D	Crosby	N63790-03-0122	N/A	N/A	1981	Removed	Yes, Code Class 1
MS-RV-1D	Crosby	N63790-03-0049	N/A	N/A	1980	Installed	Yes, Code Class 1

7. **Description Of Work Performed:** Replaced existing relief valve MS-RV-1D The replacement work was performed as follows:
   1) Removed twelve (12) existing "Superbolt" nuts for the relief valve inlet joint.
   2) Removed sixteen (16) existing "Superbolt" bolts for the relief valve outlet joint.
   3) Removed existing relief valve Serial No N63790-03-0122 (Previous/Original Serial No N63790-00-0122) with set pressure of 1175 Psig at rated temperature of 575°F.
   4) Performed VT-1 visual examination on twelve (12) new standard (regular) nuts for the relief valve inlet joint. VT-1 visual examination results acceptable.
   5) Installed replacement relief valve with Serial No N63790-03-0049 (Previous/Original Serial No N63790-00-0049) with set pressure of 1175 Psig at rated temperature of 575° F.
   6) Installed VT-1 visually examined twelve (12) new standard (regular) nuts for the relief valve inlet joint. Note - None of the existing "Superbolt" nuts were reused.
   7) Installed sixteen (16) new standard (regular) bolts for the relief valve outlet joint. Note - None of the existing "Superbolt" bolts were reused.
   8) Performed VT-2 visual examination during pressure test to confirm pressure boundary integrity of the relief valve inlet joint. No evidence of leakage during the pressure test.

NOTES -
1) The applicable ASME Code Cases, if any are listed on the ASME Code Data Reports.
2) * Company name changed from Washington Public Power Supply System (WPPSS) to Energy Northwest (EN) in 1999.

Continued On Sheet 2 of 2

PLAN No 2-2236

ENERGY NORTHWEST
People · Vision · Solutions

FORM NIS-2 OWNER'S REPORT FOR REPAIR/REPLACEMENT ACTIVITY (Back)

8 Tests Conducted: Hydrostatic ☐ **Pneumatic** ☐ **Nominal Operating Pressure** ☐ **Other** ☐ *
Exempt ☐ **Test Pressure:** 1020 Psig **Test Temperature:** 165° F

9. Remarks (Applicable Manufacturer's Data Reports to be attached): 1) See attached NVR-1 report for replacement relief valve Serial No N63790-03-0049 (Previous/Original Serial No N63790-00-0049), 2) See attached R-4 report for replacement relief valve Serial No N63790-03-0049 (Previous/Original Serial No N63790-00-0049), 3) See attached NV-1 Code Data Report for previous/original relief valve Serial No N63790-00-0049, 4) * The test pressure and the test temperature on the relief valve inlet joint was recorded during ASME Section XI pressure test which was performed in accordance with PPM No OSP-RPV-R801 "Reactor Pressure Vessel Leakage Test".

CERTIFICATE OF COMPLIANCE

I certify that the statements made in this Owner's Report are correct and that this conforms to the requirements of the ASME Code, Section XI.
Type Code Symbol Stamp: Not Applicable
Certificate Of Authorization No.: Not Applicable
Expiration Date: Not Applicable

Prepared By Kuldip Singh ***Signed By*** Kuldip Singh
Kuldip Singh - Program Lead Engineer (PLE) Kuldip Singh - Program Lead Engineer (PLE)
Date 7/15/09 ***Date*** 7/15/09

CERTIFICATE OF INSERVICE INSPECTION

I, the undersigned, holding a valid commission issued by the National Board of Boiler and Pressure Vessel Inspectors and the State of Washington ***and employed by*** Hartford Steam Boiler Of Connecticut of Hartford, Connecticut ***have inspected the components described in this Owner's Report during the period*** 4/16/2009 ***to*** 7/21/2009 ***and state to the best of my knowledge and belief, the Owner has performed examinations and taken corrective measures described in this Owner's Report in accordance with the requirements of the ASME Code, Section XI.***
By signing this certificate neither the Inspector nor his employer makes any warranty, expressed or implied, concerning the examinations and corrective measures described in this Owner's Report. Furthermore, neither the Inspector nor his employer shall be liable in any manner for any personal injury or property damage or a loss of any kind arising from or connected with this inspection.

Inspector's Signature ***Commissions*** 1317Z WANI
National Board, State, and Endorsements

Date 7/21/2009

PLAN No 2-2236

ENERGY NORTHWEST
People · Vision · Solutions

FORM NIS-2 OWNER'S REPORT FOR REPAIR/REPLACEMENT ACTIVITY
As Required By The Provisions Of The ASME Code Section XI

Date: 07/15/2009
Sheet: 2 Of 2
Unit: Not Applicable

1. **Owner:** Energy Northwest
   Address: Columbia Generating Station, North Power Plant Loop, Richland, Washington, 99352
2. **Plant:** Columbia Generating Station
   Address: Columbia Generating Station, North Power Plant Loop, Richland, Washington, 99352
3. (a) **Work Performed By:** Energy Northwest
   (b) **Repair/Replacement Organization P.O. No, Job No, etc.:** Energy Northwest
   (c) **Type Code Symbol Stamp:** Not Applicable
   (d) **Certificate Of Authorization No.:** Not Applicable
   (e) **Expiration Date:** Not Applicable
4. **Identification Of System:** Main Steam (MS) System
5. (a) **Applicable Construction Code:** ASME Section III, Code Class 1, 1971 Edition with Winter 1973 Addenda, Code Case: Note 1
   (b) **Applicable Edition Of ASME Section XI Used For Repair/Replacement Activity:** 2001 Edition with 2003 Addenda
   (c) **Applicable ASME Section XI Case(s):** None
6. **Identification Of Components**

Name Of Component	Name Of Manufacturer	Manufacturer's Serial No	National Board No	Other I.D.	Year Built	Corrected, Removed Or Installed	ASME Code Stamped (Yes Or No) Code Class
B22-G001D	WPPSS*	B22-G001D-P1	N/A	N/A	1983	See Item 7 Below	Yes, Code Class 1
MS-RV-1D	Crosby	N63790-03-0122	N/A	N/A	1981	Removed	Yes, Code Class 1
MS-RV-1D	Crosby	N63790-03-0049	N/A	N/A	1980	Installed	Yes, Code Class 1

7. **Description Of Work Performed: Notes Continuation From Sheet 1 of 2**

NOTES -

3) The existing ASME Code Stamped piping system in which the replacement valve Serial No N63790-03-0049 (Previous/Original Serial No N63790-00-0049) was installed is Main Steam (MS) piping system B22-G001D-P1. This piping system is certified to comply with ASME Section III, Code Class 1, 1971 Edition with Winter 1973 Addenda requirements.

4) The existing ASME Code Stamped piping system applicable to the relief valve outlet side is certified to comply with ASME Section III, Code Class 3, 1971 Edition with Winter 1973 Addenda requirements.

5) The replacement relief valve Serial No N63790-03-0049 (Previous/Original Serial No N63790-00-0049) is certified to comply with ASME Section III, Code Class 1, 1971 Edition with no Addenda requirements.

6) The relief valve serial number in parenthesis is the old (previous/original) serial numbers. The relief valve serial number with out the parenthesis is the serial numbers of relief valve previously modified (upgraded) by NWS Technologies, LLC, 131 Venture Boulevard, Spartanburg, SC 29301. The modification (upgrading) work on the relief valve was performed in accordance with NWS Technologies, LLC VR and NR programs.

Dilip Singh
7/15/09

PLAN NO. 2-2236

FORM NVR-1 REPORT OF REPAIR ☒ REPLACEMENT ☒ OF NUCLEAR PRESSURE RELIEF DEVICES

1. Work performed by: **NWS Technologies, LLC** Purchase Order # 326692 7/14/09.
   131 Venture Boulevard, Spartanburg, SC 29306
2. Work performed for: Energy Northwest - Columbia Generating Station
3/4. Owner - name, address and identification of nuclear power plant: Energy Northwest - Columbia Generating Station, North Power Plant Loop, Richland, WA 99352-0968
5. a: Repaired pressure relief device: Main Steam Safety Relief Valve
   b: Name of manufacturer: Crosby Valve & Gage Co.
   c: Identifying nos.

HB-65-BP-FN	new s/n: N63790-03-0049	N/A	steam	6 x 10	1980
(type)	(mfr's S/N)	(NB#)	(service)	(size)	(yr.built)

   d: Construction Code:

ASME Sec. III Div. 1	1971	N/A	N/A	1
(name/section/division)	(edition)	(addenda)	(Code Cases(s))	(Code Class)

6. ASME Code Section XI applicable for inservice inspection: 2001 (edition) 2003 (addenda) N/A (Code Case(s))
7. ASME Code Section XI used for repairs, replacements: 2001 (edition) 2003 (addenda) N/A (Code Case(s))
8. Construction Code used for repairs, replacements: 1971 (edition) N/A (addenda) N/A (Code Case(s))
9. Design responsibilities: N/A MS-RV-1D, S/N N63790-03-0049.
10. Opening pressure: 1175 psig
    Set-pressure adjustment made at: NWS Technologies, LLC using steam
11. Description of work (include name and identifying number of replacement parts): See Form R-4 Report Supplementary Sheet
12. Remarks:

CERTIFICATE OF COMPLIANCE

I, Cesar V. Sierra certify that to the best of my knowledge and belief the statements made in this report are correct and the repair, modification or replacement of the pressure relief devices described above conforms to Section XI of the ASME Code and the National Board Inspection Code "VR" and "NR" rules.
National Board Certificate of Authorization No. 632 to use the "VR" stamp expires April 3, 2009.
National Board Certificate of Authorization No. 81 to use the "NR" stamp expires April 9, 2009.

2/15/09	NWS Technologies, LLC		Manager, QA
Date	Repair Organization	Authorized representative	Title

CERTIFICATE OF INSPECTION

I, **Charles F. Toegel Jr.** holding a valid commission issued by The National Board of Boiler and Pressure Vessel Inspectors and certificate of competency issued by the jurisdiction of **North Carolina** and employed by **Hartford Steam Boiler of CT** of Hartford, CT have inspected the repair, modification or replacement described in this report on 16 FEB 2009 and state that to the best of my knowledge and belief, this repair, modification or replacement has been completed in accordance with Section XI of the of the ASME Code and the National Board Inspection Code "VR" and "NR" rules.
By signing this certificate, neither the undersigned nor my employer makes any warranty, expressed or implied, concerning this repair, modification or replacement described in this report. Furthermore, neither the undersigned nor my employer shall be liable in any manner for any personal injury, property damage or loss of any kind arising from or connected with this inspection.

2/16/09		NB # 8462, A, N, I NC# 1073
Date	Inspector's Signature	Commissions (NB (incl endorsements), jurisdiction,& no.)

PLAN No. 22236

FORM R-4 REPORT SUPPLEMENTARY SHEET (NVR-1)

In accordance with provisions of the National Board Inspection Code

1. Work performed by: **NWS Technologies, LLC** Valve S/N: **N63790-03-0049** 7/14/09
   131 Venture Boulevard, Spartanburg, SC 29306

2. Owner: Energy Northwest - Columbia Generating Station

3. Location of installation Energy Northwest - Columbia Generating Station
   North Power Plant Loop, Richland, WA 99352-0968

Purchase Order # 326692

Reference Line No. MS-RV-1D, S/N N63790-03-0049

Continued from Form NVR-1 for Valve S/N N63790-03-0046

11. NWS Traveler # 08-154
The valve was disassembled.

Parts replaced during the repair include:
Nozzle: New S/N N97498-54-0169
Eductor Gasket: MC 56230461
Four Inlet Studs, Cat ID 54400514, Marked: F973
One disc holder pin: MC 54407794
Two inlet hole heli-coils were installed: Cat ID 18379 Heat Code US-88M9

After reassembly, the valve set-pressure was certified using steam as the lift medium.
The valve was then jacked and lapped to restore seat integrity.
A final steam seat tightness test was then done at 93% of set-pressure.

Date 2/15/09 Signed _____ (authorized representative) Name: Cesar V. Sierra (authorized representative)

Date 2/16/09 Signed _____ (inspector) Commissions: **NB# 8462, A,N,I NC# 1073** (National Board and jurisdiction no.)

PLAN No. 2-2236

MS-RV-1D, S/N N63790-03-0049

Philip Smith 7/14/09

CROSBY CROSBY VALVE & GAGE COMPANY
WRENTHAM, MASS

FORM NV-1 FOR SAFETY AND SAFETY RELIEF VALVES Q.C.-46D
As Required by the Provisions of the ASME Code Rules

DATA REPORT
Safety and Safety Relief Valves

1. Manufactured by Crosby Valve & Gage Company, 43 Kendrick St., Wrentham, MA 02093
Name and Address

Model No. KB-65-BF-FN Order No. N94275 Contract Date 4/24/79 National Board No. N/A

2. Manufactured For General Electric Company, 175 Curtner Ave., San Jose, CA 95125 Order No. 205-AJ986
Name and Address

3. Owner Washington Public Power Supply System, Richland, Washington 99352
Name and Address

4. Location of Plant Hanford Reservation, Richland, Washington 99352

5. Valve Identification MPL #822-F013 Serial No. N63790-00-0049 Drawing No. DS-A-63790 Rev. C

Type Safety Relief (Safety, Safety Relief, Pilot, Power Actuated) Orifice Size R (Inch) Pipe Size -- (Inch) Inlet 6 (Inch) Outlet 10 (Inch)

6. Set Pressure (psig) 1175 575° F (Rated Temperature)

Stamped Capacity 884,314 @ 3 %Overpressure — Blowdown (psig) 2% to 11%

Hydrostatic Test (psig) Inlet 2370 Outlet 975 psig (Assembled Valve) 1100 psig (Body Only) (Applicable to Valves for Closed Systems Only)

Pressure Retaining Pieces

	Serial No. Identification	Material Specification Including Type or Grade
a. Bar Stock & Forgings		
Body	N93183-35-0068	ASTM A105-71 Gr. II ASME SA105 Gr. II
Bonnet	N93407-35-0031	ASTM A105-71 Gr. II ASME SA105 Gr. II
b.		
Disc Insert	N93185-34-0081	ASME SA637 Gr. 7
Nozzle	N93184-33-0053	ASME SA182 Gr. F5
Disc Holder *K5548-35-0095	*N89714-34-0127	AMS 5662B
Spring Washers K62858-35-0031	K62856-35-0087 K62857-35-0052	ASTM A105-71 Gr. II ASME SA105 Gr. II
Adjusting Bolt	N93410-33-0056	ASME SA193 Gr. B6
Spindle Point K62873-35-0049	*N89720-34-0092	ASTM A564-71 Type 630 ASME SA564 Type 630
c. Spring K62858-35-0031	*N89722-0005	ASTM A304-66 Gr. 416H
d. Bolting		
e. Spindle Ball K62873-35-0049	N93213-0049	Stellite #6
Thrust Bearing Adapter	N93409-32-0052	ASME SA193 Gr. B6
Bonnet Stud (BW5, J17)	N93207-0585 thru 0596	ASTM A193-71 Gr. B7 ASME SA193 Gr. B7
Bonnet Stud Nut (J87)	N93210-0805 thru 0816	ASME SA194 Gr. 2H
Inlet Stud (BW6)	N93216-0587 thru 0598	ASTM A193-71 Gr. B7 ASME SA193 Gr. B7
Inlet Stud Nut (BW8)	N93218-0591 thru 0602	ASTM A194-71 Gr. 2H ASME SA194 Gr. 2H
Adjusting Bolt Button K63618-33-0037	N93411-33-0057	ASME SA193 Gr. B6

MAB

2

FOR INFORMATION ONLY

ZX00380986

S/N N6 3790.00 -00
Cwd p Ewe
3/1/8

Valve originally built against Crosby Order No. N103600, Assembly No. N56000. Valve modification consists of replacement of the Disc Insert, Nozzle, Bonnet Stud Nuts, Adjusting Bolt, and Thrust Bearing Adapter, remachining of the Body, Spring Washers, Bonnet, and Spindle Assembly, and adding an Adjusting Bolt Button Assembly. New Serialization is required unless indicated by an asterisk.
Original nameplate removed and new nameplate attached.

CERTIFICATE OF COMPLIANCE

We certify that the statements made in this report are correct and that this valve conforms to the rules of construction of the ASME Code for Nuclear Power Plant Components, Section III, Div. 1, 1971 Edition, Addenda No Addenda (Date), Code Case No. 1547 & 1711.
Class 1

Date 11-5-80 Signed Crosby Valve & Gage Co. (N Certificate Holder) by R. A. Cummings

Our ASME Certificate of Authorization No. 1878 to use the NV symbol expires September 30, 1981 (Date).

CERTIFICATION OF DESIGN

Design information on file at Crosby Valve & Gage Company

Stress analysis report (Class 1 only) on file at Crosby Valve & Gage Company
43 Kendrick Street, Wrentham, Massachusetts 02093

Design specifications certified by[1] Boyd P. Brooks

PE State California Reg. No. 13655

Stress report certified by[1] W.D. Greenlaw

PE State Massachusetts Reg. No. 14784

[1]Signature not required - list name only.

CERTIFICATE OF SHOP INSPECTION

I, the undersigned, holding a valid commission issued by the National Board of Boiler and Pressure Vessel Inspectors and the State or Province of Massachusetts and employed by Factory Mutual Systems* of Norwood, Massachusetts have inspected the pump, or valve, described in this Data Report on 12/5, 1980 and state that to the best of my knowledge and belief, the N Certificate Holder has constructed this pump, or valve, in accordance with the ASME Code for Nuclear Power Plant Components.

By signing this certificate, neither the Inspector nor his employer makes any warrant, expressed or implied, concerning the equipment described in this Data Report. Furthermore, neither the Inspector nor his employer shall be liable in any manner for any personal injury or property damage or a loss of any kind arising from or connected with this inspection.

Date 12/5 19 80

Signed John [illegible] (Inspector) Commissions MASS 1266 (Nat'l. Bd., State, Prov. and No.)

*Arkwright-Boston Manufacturers Mutual Insurance Company - Mutual Boiler & Machinery Div.

MAB

3 4 5 6
7 8 9 10
11

ZX00380987

ENERGY NORTHWEST
People · Vision · Solutions

FORM NIS-2 OWNER'S REPORT FOR REPAIR/REPLACEMENT ACTIVITY
As Required By The Provisions Of The ASME Code Section XI

1. Owner: Energy Northwest
Address: Columbia Generating Station, North Power Plant Loop, Richland, Washington, 99352
2. Plant: Columbia Generating Station
Address: Columbia Generating Station, North Power Plant Loop, Richland, Washington, 99352

Date: 07/15/2009
Sheet: 1 Of 2
Unit: Not Applicable

3. (a) Work Performed By: Energy Northwest
(b) Repair/Replacement Organization P.O. No, Job No, etc.: Energy Northwest
(c) Type Code Symbol Stamp: Not Applicable
(d) Certificate Of Authorization No.: Not Applicable
(e) Expiration Date: Not Applicable
4. Identification Of System: Main Steam (MS) System
5. (a) Applicable Construction Code: ASME Section III, Code Class 1, 1971 Edition with Winter 1973 Addenda, Code Case: Note 1
(b) Applicable Edition Of ASME Section XI Used For Repair/Replacement Activity: 2001 Edition with 2003 Addenda
(c) Applicable ASME Section XI Case(s): None
6. Identification Of Components

Name Of Component	Name Of Manufacturer	Manufacturer's Serial No	National Board No	Other I.D.	Year Built	Corrected, Removed Or Installed	ASME Code Stamped (Yes Or No) Code Class
B22-G001D	WPPSS*	B22-G001D-P1	N/A	N/A	1983	See Item 7 Below	Yes, Code Class 1
MS-RV-3D	Crosby	N63790-03-0057	N/A	N/A	1980	Removed	Yes, Code Class 1
MS-RV-3D	Crosby	N63790-03-0137	N/A	N/A	1980	Installed	Yes, Code Class 1

7. Description Of Work Performed: Replaced existing relief valve MS-RV-3D The replacement work was performed as follows:

1) Removed twelve (12) existing "Superbolt" nuts for the relief valve inlet joint.
2) Removed sixteen (16) existing "Superbolt" bolts for the relief valve outlet joint.
3) Removed existing relief valve Serial No N63790-03-0057 (Previous/Original Serial No N63790-00-0057) with set pressure of 1195 Psig at rated temperature of 575°F.
4) Performed VT-1 visual examination on twelve (12) new standard (regular) nuts for the relief valve inlet joint. VT-1 visual examination results acceptable.
5) Installed replacement relief valve with Serial No N63790-03-0137 (Previous/Original Serial No N63790-00-0137) with set pressure of 1195 Psig at rated temperature of 575° F.
6) Installed VT-1 visually examined twelve (12) new standard (regular) nuts for the relief valve inlet joint. Note - None of the existing "Superbolt" nuts were reused.
7) Installed sixteen (16) new standard (regular) bolts for the relief valve outlet joint. Note - None of the existing "Superbolt" bolts were reused.
8) Performed VT-2 visual examination during pressure test to confirm pressure boundary integrity of the relief valve inlet joint. No evidence of leakage during the pressure test.

NOTES -

1) The applicable ASME Code Cases, if any are listed on the ASME Code Data Reports.
2) * Company name changed from Washington Public Power Supply System (WPPSS) to Energy Northwest (EN) in 1999.

Continued On Sheet 2 of 2

PLAN No 2-2237

ENERGY NORTHWEST
People · Vision · Solutions

FORM NIS-2 OWNER'S REPORT FOR REPAIR/REPLACEMENT ACTIVITY (Back)

8 Tests Conducted: Hydrostatic ☐ **Pneumatic** ☐ **Nominal Operating Pressure** ☐ **Other** ☐ *
Exempt ☐ **Test Pressure:** 1020 Psig **Test Temperature:** 165° F

9. Remarks (Applicable Manufacturer's Data Reports to be attached): 1) See attached NVR-1 report for replacement relief valve Serial No N63790-03-0137 (Previous/Original Serial No N63790-00-0137), 2) See attached R-4 report for replacement relief valve Serial No N63790-03-0137 (Previous/Original Serial No N63790-00-0137), 3) See attached NV-1 Code Data Report for previous/original relief valve Serial No N63790-00-0137, 4) See attached NV-1 Code Data Report relief valve old Serial No N56000-02-0042 modified to new Serial No N63790-00-0137, 5) * The test pressure and the test temperature on the relief valve inlet joint was recorded during ASME Section XI pressure test which was performed in accordance with PPM No OSP-RPV-R801 "Reactor Pressure Vessel Leakage Test".

CERTIFICATE OF COMPLIANCE

I certify that the statements made in this Owner's Report are correct and that this conforms to the requirements of the ASME Code, Section XI.
Type Code Symbol Stamp: Not Applicable
Certificate Of Authorization No.: Not Applicable
Expiration Date: Not Applicable

Prepared By Kuldip Singh — Kuldip Singh - Program Lead Engineer (PLE)
Date 7/15/09

Signed By Kuldip Singh — Kuldip Singh - Program Lead Engineer (PLE)
Date 7/15/09

CERTIFICATE OF INSERVICE INSPECTION

I, the undersigned, holding a valid commission issued by the National Board of Boiler and Pressure Vessel Inspectors and the State of Washington ***and employed by*** Hartford Steam Boiler Of Connecticut of Hartford, Connecticut ***have inspected the components described in this Owner's Report during the period*** 5-4-09 ***to*** 7-30-09 ***and state to the best of my knowledge and belief, the Owner has performed examinations and taken corrective measures described in this Owner's Report in accordance with the requirements of the ASME Code, Section XI.***
By signing this certificate neither the Inspector nor his employer makes any warranty, expressed or implied, concerning the examinations and corrective measures described in this Owner's Report. Furthermore, neither the Inspector nor his employer shall be liable in any manner for any personal injury or property damage or a loss of any kind arising from or connected with this inspection.

Frank A. Allgaier — Inspector's Signature

Commissions 13324 W A N I — National Board, State, and Endorsements

Date 7-30-2009

PLAN No 2-2237

ENERGY NORTHWEST
People·Vision·Solutions

FORM NIS-2 OWNER'S REPORT FOR REPAIR/REPLACEMENT ACTIVITY
As Required By The Provisions Of The ASME Code Section XI

1. Owner: Energy Northwest
Address: Columbia Generating Station, North Power Plant Loop, Richland, Washington, 99352
2. Plant: Columbia Generating Station
Address: Columbia Generating Station, North Power Plant Loop, Richland, Washington, 99352

Date: 07/15/2009
Sheet: 2 Of 2
Unit: Not Applicable

3. (a) Work Performed By: Energy Northwest
(b) Repair/Replacement Organization P.O. No, Job No, etc.: Energy Northwest
(c) Type Code Symbol Stamp: Not Applicable
(d) Certificate Of Authorization No.: Not Applicable
(e) Expiration Date: Not Applicable
4. Identification Of System: Main Steam (MS) System
5. (a) Applicable Construction Code: ASME Section III, Code Class 1, 1971 Edition with Winter 1973 Addenda, Code Case: Note 1
(b) Applicable Edition Of ASME Section XI Used For Repair/Replacement Activity: 2001 Edition with 2003 Addenda
(c) Applicable ASME Section XI Case(s): None
6. Identification Of Components

Name Of Component	Name Of Manufacturer	Manufacturer's Serial No	National Board No	Other I.D.	Year Built	Corrected, Removed Or Installed	ASME Code Stamped (Yes Or No) Code Class
B22-G001D	WPPSS*	B22-G001D-P1	N/A	N/A	1983	See Item 7 Below	Yes, Code Class 1
MS-RV-3D	Crosby	N63790-03-0057	N/A	N/A	1980	Removed	Yes, Code Class 1
MS-RV-3D	Crosby	N63790-03-0137	N/A	N/A	1980	Installed	Yes, Code Class 1

7. Description Of Work Performed: Notes Continuation From Sheet 1 of 2

NOTES

3) The existing ASME Code Stamped piping system in which the replacement valve Serial No N63790-03-0137 (Previous/Original Serial No N63790-00-0137) was installed is Main Steam (MS) piping system B22-G001D-P1. This piping system is certified to comply with ASME Section III, Code Class 1, 1971 Edition with Winter 1973 Addenda requirements.
4) The existing ASME Code Stamped piping system applicable to the relief valve outlet side is certified to comply with ASME Section III, Code Class 3, 1971 Edition with Winter 1973 Addenda requirements.
5) The replacement relief valve Serial No N63790-03-0137 (Previous/Original Serial No N63790-00-0137) is certified to comply with ASME Section III, Code Class 1, 1971 Edition with no Addenda requirements.
6) The relief valve serial number in parenthesis is the old (previous/original) serial numbers. The relief valve serial number with out the parenthesis is the serial numbers of relief valve previously modified (upgraded) by NWS Technologies, LLC, 131 Venture Boulevard, Spartanburg, SC 29301. The modification (upgrading) work on the relief valve was performed in accordance with NWS Technologies, LLC VR and NR programs.

Dulaip Singh
7/15/09

PLAN No. 2-2237

FORM NVR-1 REPORT OF REPAIR ☑ REPLACEMENT ☑ OF NUCLEAR PRESSURE RELIEF DEVICES

1. Work performed by: **NWS Technologies, LLC** Purchase Order # 326692 7/14/09
131 Venture Boulevard, Spartanburg, SC 29306

2. Work performed for: Energy Northwest - Columbia Generating Station

3/4. Owner - name, address and identification of nuclear power plant: Energy Northwest - Columbia Generating Station, North Power Plant Loop, Richland, WA 99352-0968

5. a: Repaired pressure relief device: Main Steam Safety Relief Valve
b: Name of manufacturer: Crosby Valve & Gage Co.
c: Identifying nos.

(type)	(mfr's S/N)	(NB#)	(service)	(size)	(yr.built)
HB-65-BP-FN	new s/n: N63790-03-0137	N/A	steam	6 x 10	1980

d: Construction Code:

(name/section/division)	(edition)	(addenda)	(Code Cases(s))	(Code Class)
ASME Sec. III Div. 1	1971	N/A	N/A	1

6. ASME Code Section XI applicable for inservice inspection:

(edition)	(addenda)	(Code Case(s))
2001	2003	N/A

7. ASME Code Section XI used for repairs, replacements:

(edition)	(addenda)	(Code Case(s))
2001	2003	N/A

8. Construction Code used for repairs, replacements:

(edition)	(addenda)	(Code Case(s))
1971	N/A	N/A

9. Design responsibilities: N/A MS-RV-3D, S/N N63790-03-0137

10. Opening pressure: 1195 psig
Set-pressure adjustment made at: NWS Technologies, LLC using steam

11. Description of work (include name and identifying number of replacement parts): See Form R-4 Report Supplementary Sheet

12. Remarks:

CERTIFICATE OF COMPLIANCE

I, Cesar V. Sierra certify that to the best of my knowledge and belief the statements made in this report are correct and the repair, modification or replacement of the pressure relief devices described above conforms to Section XI of the ASME Code and the National Board Inspection Code "VR" and "NR" rules.
National Board Certificate of Authorization No. 632 to use the "VR" stamp expires April 3, 2009.
National Board Certificate of Authorization No. 81 to use the "NR" stamp expires April 9, 2009.

Date	Repair Organization	Authorized representative	Title
2/24/09	NWS Technologies, LLC	Cesar Sierra	Manager, QA

CERTIFICATE OF INSPECTION

I, **Charles F. Toegel Jr.** holding a valid commission issued by The National Board of Boiler and Pressure Vessel Inspectors and certificate of competency issued by the jurisdiction of **North Carolina** and employed by **Hartford Steam Boiler of CT** of Hartford, CT have inspected the repair, modification or replacement described in this report on 24 FEB 2009 and state that to the best of my knowledge and belief, this repair, modification or replacement has been completed in accordance with Section XI of the of the ASME Code and the National Board Inspection Code "VR" and "NR" rules.
By signing this certificate, neither the undersigned nor my employer makes any warranty, expressed or implied, concerning this repair, modification or replacement described in this report. Furthermore, neither the undersigned nor my employer shall be liable in any manner for any personal injury, property damage or loss of any kind arising from or connected with this inspection.

Date	Inspector's Signature	Commissions (NB (incl endorsements), jurisdiction,& no.)
2/24/09	Charles F. Toegel Jr.	NB # 8462, A, N, I NC# 1073

PLAN NO. 2-2237

FORM R-4 REPORT SUPPLEMENTARY SHEET (NVR-1)

In accordance with provisions of the National Board Inspection Code

1. Work performed by: **NWS Technologies, LLC** Valve S/N: **N63790-03-0137** 7/14/09
   131 Venture Boulevard, Spartanburg, SC 29306

2. Owner: Energy Northwest - Columbia Generating Station

3. Location of installation Energy Northwest - Columbia Generating Station
   North Power Plant Loop, Richland, WA 99352-0968

Purchase Order # 326692

Reference Line No. MS-RV-3D, S/N N63790-03-0137

Continued from Form NVR-1 for Valve S/N N63790-03-0137

11. NWS Traveler # 08-157
    The valve was disassembled.

    Parts replaced during the repair include:
    Nozzle Ring Set Screw: MC25520005
    Eductor Gasket: MC 56230461
    One Inlet Stud, Cat ID 54400514, Marked: F973
    Two inlet hole studs: Cat ID 18379 Heat Code IV54

    After reassembly, the valve set-pressure was certified using steam as the lift medium.
    The valve was then jacked and lapped to restore seat integrity.
    A final steam seat tightness test was then done at 93% of set-pressure.

Date 2/24/09 Signed (authorized representative) Name: Cesar V. Sierra (authorized representative)

Date 2/24/09 Signed (inspector) Commissions: **NB# 8462, A,N,I NC# 1073** (National Board and jurisdiction no.)

PLAN No. 2-2237

CROSBY

CROSBY VALVE & GAGE COMPANY
WRENTHAM, MA

Q.C.-292, REV.
SHEET 1 OF 2

MS-RV-3D, S/N N63790-03-0137

REPAIR AND REPLACEMENT TO NUCLEAR COMPONENTS AND SYSTEMS IN NUCLEAR POWER PLANTS

1. Work performed by Crosby Valve & Gage Company 43 Kendrick St. Wrentham, MA 02093
(Name and Address)
(Repair organization's P.O. No., Job No., etc.). NV4000020

2. Owner WASHINGTON PUBLIC POWER RICHLAND,WA 99352-0968
(Name and Address)

3. Name and Identification of Nuclear Power Plant HANFORD #2

4. Address of Nuclear Power Plant RICHLAND ,WA

5. a. Identifying Nos. N63790-00-0137 – – ----- 1973
(Mfr's Serial No.) (Nat'l Bd. No.) (Jurisdiction No.) (Other) (Year Built)
b. Identification of component repaired or replacement component –
c. Name of Manufacturer CROSBY VALVE & GAGE COMPANY

6. Tests conducted: Hydrostatic (X) Pneumatic ( ) Design Pressure ( ) Pressure 2370.0 psi

7. Identification of System MAIN STEAM

8. Applicable Section(s) III of ASME Code, 19 71 Edition
Addenda NO Code Case –

9. Description of work N56000-02-0042 WAS MODIFIED TO N63790-00-0137
(Use of additional sheet(s) or sketch(es) is acceptable if correctly identified)
ASME SEC.XI.1980 EDITION WINTER 1980 ADDENDA.

10. Remarks: THIS MODIFICATION CONSISTED OF THE FOLLOWING CHANGES:

PART	PART NO.	MODIFIED TO PART NO.
BODY	N90118	N93183-41-0124
BONNET	N89717	N93407-44-0055
SPINDLE ASSY	K55465	K62873-44-0058
SPR.WASHER	N89724	K62856-44-0203
SPR.WASHER	N89723	K62857-44-0203
SPRING ASSY	K55466	K62858-31-0001

PART	PART NO.	REPLACED WITH
NOZZLE	N89713	N93184-51-0157
DISC INSERT	N89715	N93185-54-0231
THRUST.BRG.ADAPT	N89725	N93409-33-0007
ADJ.BOLT	N89726	N93410-32-0006
ADJ.BOLT BUTT.	COMMERCIAL	N93411-34-0013
ADJ.BOLT ASSY	COMMERCIAL	K63618-32-0006

L. Wolta

Certificate Holder's Serial No. N63790-00-0137

Q.C.-292, REV. A
SHEET 2 OF 2

CERTIFICATE OF COMPLIANCE

We certify that the statements made in this report are correct and all design, material, and workmanship on this MOD. (repair/replacement) conforms to the applicable section of the ASME Code.

Signed Lawrence J. Pace, QA Eng Manager 25 Feb, 1994
(Authorized Rep. of Repair Organization) (Title) (Date)

CERTIFICATE OF INSPECTION

I, the undersigned, holding a valid commission issued by the National Board of Boiler and Pressure Vessel Inspectors and the State or Province of Massachusetts and employed by Factory Mutual of Norwood, Massachusetts have inspected the repair or replacement described in this report on Feb 25, 1994 and state that to the best of my knowledge and belief, this repair or replacement has been made or constructed in accordance with the applicable section of the ASME Code.

By signing this certificate, neither the Inspector nor his employer makes any warrant, expressed or implied, concerning the repair or replacement described in this report. Furthermore, neither the Inspector nor his employer shall be liable in any manner for any personal injury or property damage or a loss of any kind arising from or connected with this inspection.

Factory Mutual Systems

Date 2/25, 1994

Signed [illegible] Commissions [illegible]
(Inspector) (Nat'l. Bd., State, Prov. and No.)

PLAN NO. 2-2237

MS-RV-3D, S/N N63790-03-0137

7/14/09

WPPSS S/N	WPPSS Set	Bailly S/N	Bailly Set
N63790-00-0134	1175	N56000-01-0037	1175
N63790-00-0135	1205	N56000-01-0099	1130
N63790-00-0136	1205	N56000-02-0043	1205
N63790-00-0137	**1195**	**N56000-02-0042**	**1195**
N63790-00-0138	1185	N56000-01-0038	1175
N63790-00-0139	1165	N56000-01-0100	1130

PLAN No. 2-2237

Philip Smith 7/14/09

CROSBY CROSB. WRENTHAM, MASS

MS-RV-3D S/N N63790-03-0137

FORM NV-1 FOR SAFETY AND SAFETY RELIEF VALVES
As required by the Provisions of the ASME Code Rules

Q.C.-44A

DATA REPORT
Safety and Safety Relief Valves

1. Manufactured By Crosby Valve & Gage Co., 43 Kendrick St., Wrentham, Mass. 02093
Name and Address

Model No. HB-65-BP-FN Order No. N-105286 Contract Date 6/28/71

2. Manufactured For General Electric Company San Jose, California Order No. 205-AD148
Name and Address

3. Owner Northern Indiana Public Service Co., Bailly Generating Station Nuclear I, Baileytown, Indiana
Name and Address

4. Location of Plant Baileytown, Indiana

5. Valve Identification MPL #B-22-F013 Serial No. N56000-02-0042 Drawing No. H-56000 Rev. C

Type Safety Safety Relief Pilot Power Actuated Orifice Size R Inch Pipe Size - Inch Inlet 6 Inch Outlet 10 Inch

6. Set Pressure (PSIG) 1195 575° F
Rated Temperature

Stamped Capacity 898800 Lbs. Hr. Sat. Steam 3 % Overpressure -- Blowdown 5%

Hydrostatic Test (PSIG) Inlet 2370 Complete Valve 825

7. The material, design, construction and workmanship comply with ASME Code, Section III.

Class 1 Edition 1971 Addenda Date Summer 1972

Pressure Containing or Pressure Retaining Components

	Serial No. Identification	Material Specification Including Type or Grade
a. Forgings		
Body	N89711-32-0024	ASTM A-105-71 Gr. II ASME SA-105 Gr. II
Bonnet	N89717-32-0018	ASTM A-105-71 Gr. II ASME SA-105 Gr. II
b. Bar Stock and Forgings		
Disc Insert	N89715-31-0034	ASTM A-461-65 Type 630
Nozzle	N89713-32-0031	ASTM A-182-71 F316 ASME SA-182 F316
Disc Holder	N89714-32-0042	AMS 5662 B
Spring Washers Top	N89724-32-0042	ASTM A-105-71 Gr. II
Spring Washers Bottom	N89723-32-0003	ASME SA-105 Gr. II
Adjusting Bolt	N89726-32-0012	ASTM A-193-71 Gr. B6 ASME SA-193 Gr. B6
Spindle Point	N89720-32-0034	ASTM A-564-72 Type 630

BWRPD.QC EMR 3-2-75

	Serial No. or Identification	Material Specification Including Type or Grade
c. Spring	NX2689-0047	ASTM A-304-66 Gr. 4161H
d. Bolting		
e. [redacted]		
Inlet Stud	N89727-0493 thru 0504	ASTM A-193-71 Gr. B7 ASME SA-193 Gr. B7
Inlet Stud Nut	N89728-0497 thru 0508	ASTM A-194-71 Cl. 2H ASME SA-194 Cl. 2H
Bonnet Stud	N89718-0497 thru 0508	ASTM A-193-71 Gr. B7 ASME SA-139 Gr. B7
Bonnet Stud Nut	N89719-0499 thru 0510	ASTM A-194-71 Cl. 2H ASME SA-194 Cl. 2H
OTHER PARTS		
Spindle Ball	N89721-0034	Stellite 6
BARS & FORGINGS	N89725-31-0009	ASTM A-193-71 Gr. B6 ASME SA-193 Gr. B6

We certify that the statements made in this report are correct.

Date 10-31 1973 Signed Crosby Valve & Gage Co. By [signature]
Manufacturer QA Manager

Certificate of Authorization No. 331 expires November 9, 1974

CERTIFICATE OF SHOP INSPECTION

I, the undersigned, holding a valid commission issued by the National Board of Boiler and Pressure Vessel Inspectors and the State or Province of Mass. and employed by Mutual Boiler & Machinery Insurance Co.*, Waltham, Mass. have inspected the equipment described in this Data Report on October 31, 1973 and state that to the best of my knowledge and belief, the Manufacturer has constructed this equipment in accordance with the applicable Subsections of ASME Section III.

By signing this certificate, neither the Inspector nor his employer makes any warranty, expressed or implied, concerning the equipment described in this Data Report. Furthermore, neither the Inspector nor his employer shall be liable in any manner for any personal injury or property damage or a loss of any kind arising from or connected with this inspection.

*Factory Mutual Group of Insurance Co.

Date October 31 1973

[signature] Commissions N.B. 6665 Mass. 1076
(Inspector) National Board, State, Province and No.)

3-3-75

PLAN No 2-2238

ENERGY NORTHWEST
People·Vision·Solutions

FORM NIS-2 OWNER'S REPORT FOR REPAIR/REPLACEMENT ACTIVITY
As Required By The Provisions Of The ASME Code Section XI

Date: 07/07/2009
Sheet: 1 Of 2
Unit: Not Applicable

1. **Owner:** Energy Northwest
   Address: Columbia Generating Station, North Power Plant Loop, Richland, Washington, 99352
2. **Plant:** Columbia Generating Station
   Address: Columbia Generating Station, North Power Plant Loop, Richland, Washington, 99352
3. **(a) Work Performed By:** Energy Northwest
   (b) Repair/Replacement Organization P.O. No, Job No, etc.: Energy Northwest
   (c) Type Code Symbol Stamp: Not Applicable
   (d) Certificate Of Authorization No.: Not Applicable
   (e) Expiration Date: Not Applicable
4. **Identification Of System:** Main Steam (MS) System
5. **(a) Applicable Construction Code:** ASME Section III, Code Class 1, 1971 Edition with Winter 1973 Addenda, Code Case: Note 1
   (b) Applicable Edition Of ASME Section XI Used For Repair/Replacement Activity: 2001 Edition with 2003 Addenda
   (c) Applicable ASME Section XI Case(s): None
6. **Identification Of Components**

Name Of Component	Name Of Manufacturer	Manufacturer's Serial No	National Board No	Other I.D.	Year Built	Corrected, Removed Or Installed	ASME Code Stamped (Yes Or No) Code Class
B22-G001D	WPPSS*	B22-G001D-P1	N/A	N/A	1983	See Item 7 Below	Yes, Code Class 1
MS-RV-4D	Crosby	N63790-03-0061	N/A	N/A	1980	Removed	Yes, Code Class 1
MS-RV-4D	Crosby	N63790-03-0062	N/A	N/A	1980	Installed	Yes, Code Class 1

7. **Description Of Work Performed:** Replaced existing relief valve MS-RV-4D The replacement work was performed as follows:
   1) Removed twelve (12) existing standard (regular) nuts for the relief valve inlet joint.
   2) Removed sixteen (16) existing standard (regular) bolts for the relief valve outlet joint.
   3) Removed existing relief valve Serial No N63790-03-0061 (Previous/Original Serial No N63790-00-0061) with set pressure of 1205 Psig at rated temperature of 575°F.
   4) Performed VT-1 visual examination on twelve (12) new "Superbolt" nuts for the relief valve inlet joint. VT-1 visual examination results acceptable.
   5) Performed VT-1 visual examination on eight (8) new "Jackbolts" associated with new "Superbolt" nuts for the relief valve inlet joint. VT-1 visual examination results acceptable.
   6) Installed replacement relief valve with Serial No N63790-03-0062 (Previous/Original Serial No N63790-00-0062) with set pressure of 1205 Psig at rated temperature of 575° F.
   7) Installed VT-1 visually examined twelve (12) new "Superbolts" nuts for the relief valve inlet joint. Note - None of the existing standard (regular) nuts were reused.
   8) Installed VT-1 visually examined eight (8) new "Jackbolts" associated with new "Superbolt" nuts for the relief valve inlet joint.
   9) Installed sixteen (16) new "Superbolt" bolts for the relief valve outlet joint. Note - None of the existing standard (regular) bolts were reused.
   10) Performed VT-2 visual examination during pressure test to confirm pressure boundary integrity of the relief valve inlet joint. No evidence of leakage during the pressure test.

NOTES -
1) The applicable ASME Code Cases, if any are listed on the ASME Code Data Reports.
2) * Company name changed from Washington Public Power Supply System (WPPSS) to Energy Northwest (EN) in 1999.

Continued On Sheet 2 of 2

PLAN No 2-2238

ENERGY NORTHWEST
People · Vision · Solutions

FORM NIS-2 OWNER'S REPORT FOR REPAIR/REPLACEMENT ACTIVITY (Back)

8 Tests Conducted: Hydrostatic [ ] **Pneumatic** [ ] **Nominal Operating Pressure** [ ] **Other** [*]
Exempt [ ] **Test Pressure:** 1020 Psig **Test Temperature:** 165° F

9. Remarks (Applicable Manufacturer's Data Reports to be attached): 1) See attached NVR-1 report for replacement relief valve Serial No N63790-03-0062 (Previous/Original Serial No N63790-00-0062), 2) See attached R-4 report for replacement relief valve Serial No N63790-03-0062 (Previous/Original Serial No N63790-00-0062), 3) See attached NV-1 Code Data Report for previous/original relief valve Serial No N63790-00-0062, 4) * The test pressure and the test temperature on the relief valve inlet joint was recorded during ASME Section XI pressure test which was performed in accordance with PPM No OSP-RPV-R801 "Reactor Pressure Vessel Leakage Test".

CERTIFICATE OF COMPLIANCE

I certify that the statements made in this Owner's Report are correct and that this conforms to the requirements of the ASME Code, Section XI.
Type Code Symbol Stamp: Not Applicable
Certificate Of Authorization No.: Not Applicable
Expiration Date: Not Applicable

Prepared By Kuldip Singh - Program Lead Engineer (PLE) ***Signed By*** Kuldip Singh - Program Lead Engineer (PLE)

Date 7/7/09 ***Date*** 7/7/09

CERTIFICATE OF INSERVICE INSPECTION

I, the undersigned, holding a valid commission issued by the National Board of Boiler and Pressure Vessel Inspectors and the State of Washington ***and employed by*** Hartford Steam Boiler Of Connecticut of Hartford, Connecticut ***have inspected the components described in this Owner's Report during the period*** 4/20/2009 ***to*** 7/14/2009 ***and state to the best of my knowledge and belief, the Owner has performed examinations and taken corrective measures described in this Owner's Report in accordance with the requirements of the ASME Code, Section XI.***
By signing this certificate neither the Inspector nor his employer makes any warranty, expressed or implied, concerning the examinations and corrective measures described in this Owner's Report. Furthermore, neither the Inspector nor his employer shall be liable in any manner for any personal injury or property damage or a loss of any kind arising from or connected with this inspection.

Inspector's Signature ***Commissions*** 13177 WA&I
National Board, State, and Endorsements

Date 7/14/2009

PLAN No 2-2238

ENERGY NORTHWEST
People·Vision·Solutions

FORM NIS-2 OWNER'S REPORT FOR REPAIR/REPLACEMENT ACTIVITY
As Required By The Provisions Of The ASME Code Section XI

Date: 07/07/2009
Sheet: 2 Of 2
Unit: Not Applicable

1. **Owner:** Energy Northwest
   Address: Columbia Generating Station, North Power Plant Loop, Richland, Washington, 99352
2. **Plant:** Columbia Generating Station
   Address: Columbia Generating Station, North Power Plant Loop, Richland, Washington, 99352
3. **(a) Work Performed By:** Energy Northwest
   (b) Repair/Replacement Organization P.O. No, Job No, etc.: Energy Northwest
   (c) Type Code Symbol Stamp: Not Applicable
   (d) Certificate Of Authorization No.: Not Applicable
   (e) Expiration Date: Not Applicable
4. **Identification Of System:** Main Steam (MS) System
5. **(a) Applicable Construction Code:** ASME Section III, Code Class 1, 1971 Edition with Winter 1973 Addenda, Code Case: Note 1
   (b) Applicable Edition Of ASME Section XI Used For Repair/Replacement Activity: 2001 Edition with 2003 Addenda
   (c) Applicable ASME Section XI Case(s): None
6. **Identification Of Components**

Name Of Component	Name Of Manufacturer	Manufacturer's Serial No	National Board No	Other I.D.	Year Built	Corrected, Removed Or Installed	ASME Code Stamped (Yes Or No) Code Class
B22-G001D	WPPSS*	B22-G001D-P1	N/A	N/A	1983	See Item 7 Below	Yes, Code Class 1
MS-RV-4D	Crosby	N63790-03-0061	N/A	N/A	1980	Removed	Yes, Code Class 1
MS-RV-4D	Crosby	N63790-03-0062	N/A	N/A	1980	Installed	Yes, Code Class 1

7. Description Of Work Performed: Notes Continuation From Sheet 1 of 2

NOTES -

3) The existing ASME Code Stamped piping system in which the replacement valve Serial No N63790-03-0062 (Previous/Original Serial No N63790-00-0062) was installed is Main Steam (MS) piping system B22-G001D-P1. This piping system is certified to comply with ASME Section III, Code Class 1, 1971 Edition with Winter 1973 Addenda requirements.

4) The existing ASME Code Stamped piping system applicable to the relief valve outlet side is certified to comply with ASME Section III, Code Class 3, 1971 Edition with Winter 1973 Addenda requirements.

5) The replacement relief valve Serial No N63790-03-0062 (Previous/Original Serial No N63790-00-0062) is certified to comply with ASME Section III, Code Class 1, 1971 Edition with no Addenda requirements.

6) The relief valve serial number in parenthesis is the old (previous/original) serial numbers. The relief valve serial number with out the parenthesis is the serial numbers of relief valve previously modified (upgraded) by NWS Technologies, LLC, 131 Venture Boulevard, Spartanburg, SC 29301. The modification (upgrading) work on the relief valve was performed in accordance with NWS Technologies, LLC VR and NR programs.

Dilip Singh
7/7/09

PLAN No. 2-2238

FORM NVR-1 REPORT OF REPAIR ☒ REPLACEMENT ☒ OF NUCLEAR PRESSURE RELIEF DEVICES

Philip Ruiz 7/7/09.

1. Work performed by: **NWS Technologies, LLC** Purchase Order # 313236
   131 Venture Boulevard, Spartanburg, SC 29306
2. Work performed for: Energy Northwest - Columbia Generating Station
3/4. Owner - name, address and identification of nuclear power plant: Energy Northwest - Columbia Generating Station, North Power Plant Loop, Richland, WA 99352-0968
5. a: Repaired pressure relief device: Main Steam Safety Relief Valve
   b: Name of manufacturer: Crosby Valve & Gage Co.
   c: Identifying nos.

HB-65-BP-FN	new s/n: N63790-03-0062	N/A	steam	6 x 10	1980
(type)	(mfr's S/N)	(NB#)	(service)	(size)	(yr.built)

   d: Construction Code:

ASME Sec. III Div. 1	1971	N/A	N/A	1
(name/section/division)	(edition)	(addenda)	(Code Cases(s))	(Code Class)

6. ASME Code Section XI applicable for inservice inspection: 2001 (edition) 2003 (addenda) N/A (Code Case(s))
7. ASME Code Section XI used for repairs, replacements: 2001 (edition) 2003 (addenda) N/A (Code Case(s))
8. Construction Code used for repairs, replacements: 1971 (edition) N/A (addenda) N/A (Code Case(s))
9. Design responsibilities: N/A MS-RV-4D, S/N N63790-03-0062.
10. Opening pressure: 1205 psig
    Set-pressure adjustment made at: NWS Technologies, LLC using steam
11. Description of work (include name and identifying number of replacement parts): See Form R-4 Report Supplementary Sheet
12. Remarks:

CERTIFICATE OF COMPLIANCE

I, Cesar V. Sierra certify that to the best of my knowledge and belief the statements made in this report are correct and the repair, modification or replacement of the pressure relief devices described above conforms to Section XI of the ASME Code and the National Board Inspection Code "VR" and "NR" rules.
National Board Certificate of Authorization No. 632 to use the "VR" stamp expires April 3, 2009.
National Board Certificate of Authorization No. 81 to use the "NR" stamp expires April 9, 2009.

2/24/09	NWS Technologies, LLC	Cesar Sierra	Manager, QA
Date	Repair Organization	Authorized representative	Title

CERTIFICATE OF INSPECTION

I, **Charles F. Toegel Jr.** holding a valid commission issued by The National Board of Boiler and Pressure Vessel Inspectors and certificate of competency issued by the jurisdiction of **North Carolina** and employed by **Hartford Steam Boiler of CT** of Hartford, CT have inspected the repair, modification or replacement described in this report on 24 FEB 2009 and state that to the best of my knowledge and belief, this repair, modification or replacement has been completed in accordance with Section XI of the of the ASME Code and the National Board Inspection Code "VR" and "NR" rules.
By signing this certificate, neither the undersigned nor my employer makes any warranty, expressed or implied, concerning this repair, modification or replacement described in this report. Furthermore, neither the undersigned nor my employer shall be liable in any manner for any personal injury, property damage or loss of any kind arising from or connected with this inspection.

2/24/09	Charles F. Toegel Jr.	NB # 8462, A, N, I NC# 1073
Date	Inspector's Signature	Commissions (NB (incl endorsements), jurisdiction & no)

PLAN No. 2-2238
Dulaip Singh
7/7/09.

FORM R-4 REPORT SUPPLEMENTARY SHEET (NVR-1)

In accordance with provisions of the National Board Inspection Code

1. Work performed by: **NWS Technologies, LLC** Valve S/N: **N63790-03-0062**
   131 Venture Boulevard, Spartanburg, SC 29306

2. Owner: Energy Northwest - Columbia Generating Station

3. Location of installation Energy Northwest - Columbia Generating Station
   North Power Plant Loop, Richland, WA 99352-0968

Purchase Order # 313236

Reference Line No. MS-RV-4D, S/N N63790-03-0062

Continued from Form NVR-1 for Valve S/N N63790-03-0062

11. NWS Traveler # 03-171
The valve was disassembled.

Parts replaced during the repair include:
Disc Insert with pin: S/N N97499-46-0119
Nozzle: S/N N97498-33-0015
Spindle: K82137-39-0020
Bellows/Disc Ring Assembly: K55484-47-0261
Disc Holder Pin: MC 54407794
Nozzle Ring Set Screw: MC 25520243
Eductor Gasket: MC 56230461
Inlet Stud: Cat ID 54400514 Heat Code F973

After reassembly, the valve set-pressure was certified using steam as the lift medium.
The valve was then jacked and lapped to restore seat integrity.
A final steam seat tightness test was then done at 93% of set-pressure.

Date 2/24/09 Signed (authorized representative) Name: Cesar V. Sierra (authorized representative)

Date 2/24/09 Signed (inspector) Commissions: **NB# 8462, A,N,I NC# 1073** (National Board and jurisdiction no.)

PLAN No. 2-2238

CROSBY

CROSBY VALVE & GAGE COMPANY
WRENTHAM, MASS

MS-RV-4D S/N N63790-03-0062

FORM NV-1 FOR SAFETY AND SAFETY RELIEF VALVES Q.C.-44D
As Required by the Provisions of the ASME Code Rules

DATA REPORT
Safety and Safety Relief Valves

FOR INFORMATION ONLY

1. Manufactured By Crosby Valve & Gage Company, 43 Kendrick St., Wrentham, MA 02093
Name and Address

Model No. HB-65-BP-FN Order No. N94275 Contract Date 4/24/79 National Board No. N/A

2. Manufactured For General Electric Company, 175 Curtner Ave., San Jose, CA 95125 Order No. 205-AJ986
Name and Address

3. Owner Washington Public Power Supply System, Richland, Washington 99352
Name and Address

4. Location of Plant Hanford Reservation, Richland, Washington 99352

5. Valve Identification MPL #B22-F013 Serial No. N63790-00-0062 Drawing No. DS-A-63790 Rev. C

Type Safety Relief (Safety, Safety Relief, Pilot, Power Actuated) Orifice Size R Inch Pipe Size -- Inch Inlet 6 Inch Outlet 10 Inch

6. Set Pressure (psig) 1205 [illegible]° F (Rated Temperature)

Stamped Capacity 906,621 @ 3 % Overpressure -- Blowdown (psig) 2% to 11%

Hydrostatic Test (psig) Inlet 2370 Outlet [illegible] psig (Assembled Valve) 1100 psig (Body Only)
(Applicable to Valves for Closed Systems Only)

Pressure Retaining Pieces

	Serial No. Identification	Material Specification Including Type or Grade
a. Bar Stock & Forgings		
Body	N93183-35-0081	ASTM A105-71 Gr. II ASME SA105 Gr. II
Bonnet	N93407-35-0044	ASTM A105-71 Gr. II ASME SA105 Gr. II
b.		
Disc Insert	N93185-34-0094	ASME SA637 Gr. 718
Nozzle	N93184-33-0066	ASME SA182 Gr. F316
Disc Holder	*K55484-35-0088 *N89714-34-0119	AMS 5662B
Spring Washers	K62858-35-0044 K62856-35-0100 K62857-35-0065	ASTM A105-71 Gr. II ASME SA105 Gr. II
Adjusting Bolt	N93410-33-0069	ASME SA193 Gr. B6
Spindle Point	K62873-35-0062 *N89720-34-0074	ASTM A564-71 Type 630 ASME SA564 Type 630
c. Spring	K62858-35-0044 *N89722-0020	ASTM A304-66 Gr. 416H
d. Bolting		
e. Spindle Ball	K62873-35-0062 N93213-0062	Stellite #6
Thrust Bearing Adapter	N93409-32-0064	ASME SA193 Gr. B6
Bonnet Stud	(BW5, I17) N93207-0741 thru 0752	ASTM A193-71 Gr. B7 ASME SA193 Gr. B7
Bonnet Stud Nut	(J87) N93210-0961 thru 0972	ASME SA194 Gr. 2H
Inlet Stud	(BW6) N93216-0743 thru 0754	ASTM A193-71 Gr. B7 ASME SA193 Gr. B7
Inlet Stud Nut	(BW8) N93218-0747 thru 0758	ASTM A194-71 Gr. 2H ASME SA194 Gr. 2H

7Y00380156

modification consists of replacement of the Disc Insert, Nozzle, Bonnet Stud Nuts, Adjusting Bolt, and Thrust Bearing Adapter, remachining of the Body, Spring Washers, Bonnet, and Spindle Assembly, and adding an Adjusting Bolt Button Assembly. New Serialization is required unless indicated by an asterisk.
Original nameplate removed and new nameplate attached.

N63790-00-00102

CERTIFICATE OF COMPLIANCE

We certify that the statements made in this report are correct and that this valve conforms to the rules of construction of the ASME Code for Nuclear Power Plant Components, Section III, Div. 1, 1971 Edition, Addenda No Addenda (Date), Code Case No. 1567 & 1711.
Class 1

Date 11-5-80 Signed Crosby Valve & Gage Co. (N Certificate Holder) by R. A. Casavant

Our ASME Certificate of Authorization No. 1878 to use the NV symbol expires September 30, 1983 (Date).

CERTIFICATION OF DESIGN

Design information on file at Crosby Valve & Gage Company

Stress analysis report (Class 1 only) on file at Crosby Valve & Gage Company
43 Kendrick Street, Wrentham, Massachusetts 02093

Design specifications certified by[1] Boyd P. Brooks

PE State California Reg. No. 13655

Stress report certified by[1] W.D. Greenlaw

PE State Massachusetts Reg. No. 14784

[1]Signature not required - list name only.

CERTIFICATE OF SHOP INSPECTION

I, the undersigned, holding a valid commission issued by the National Board of Boiler and Pressure Vessel Inspectors and the State or Province of Massachusetts and employed by Factory Mutual Systems* of Norwood, Massachusetts have inspected the pump, or valve, described in this Data Report on 11/18, 1980 and state that to the best of my knowledge and belief, the N Certificate Holder has constructed this pump, or valve, in accordance with the ASME Code for Nuclear Power Plant Components.

By signing this certificate, neither the Inspector nor his employer makes any warrant, expressed or implied, concerning the equipment described in this Data Report. Furthermore, neither the Inspector nor his employer shall be liable in any manner for any personal injury or property damage or a loss of any kind arising from or connected with this inspection.

Date 11/18 1980.

Signed John E. Morris (Inspector) Commissions MASS 1266 (Nat'l. Bd., State, Prov. and No.)

*Arkwright-Boston Manufacturers Mutual Insurance Company - Mutual Boiler & Machinery Div.

ZX00380157

PLAN No 2-2239

ENERGY NORTHWEST
People·Vision·Solutions

FORM NIS-2 OWNER'S REPORT FOR REPAIR/REPLACEMENT ACTIVITY
As Required By The Provisions Of The ASME Code Section XI

1. Owner: Energy Northwest
Address: Columbia Generating Station, North Power Plant Loop, Richland, Washington, 99352
2. Plant: Columbia Generating Station
Address: Columbia Generating Station, North Power Plant Loop, Richland, Washington, 99352

Date: 07/15/2009
Sheet: 1 Of
Unit: Not Applicable

3. (a) Work Performed By: Energy Northwest
(b) Repair/Replacement Organization P.O. No, Job No, etc.: Energy Northwest
(c) Type Code Symbol Stamp: Not Applicable
(d) Certificate Of Authorization No.: Not Applicable
(e) Expiration Date: Not Applicable
4. Identification Of System: Main Steam (MS) System
5. (a) Applicable Construction Code: ASME Section III, Code Class 1, 1971 Edition with Winter 1973 Addenda, Code Case: Note 1
(b) Applicable Edition Of ASME Section XI Used For Repair/Replacement Activity: 2001 Edition with 2003 Addenda
(c) Applicable ASME Section XI Case(s): None
6. Identification Of Components

Name Of Component	Name Of Manufacturer	Manufacturer's Serial No	National Board No	Other I.D.	Year Built	Corrected, Removed Or Installed	ASME Code Stamped (Yes Or No) Code Class
B22-G001A	WPPSS*	B22-G001A-P1	N/A	N/A	1983	See Item 7 Below	Yes, Code Class 1

7. Description Of Work Performed: Removed and reinstalled existing relief valve MS-RV-2A The work was performed as follows:

1) Removed twelve (12) existing "Superbolt" nuts for the relief valve inlet joint.
2) Removed sixteen (16) existing "Superbolt" bolts for the relief valve outlet joint.
3) Performed VT-1 visual examination on twelve (12) new standard (regular) nuts for the relief valve inlet joint. VT-1 visual examination results acceptable.
4) Performed VT-1 visual examination on three (3) new studs for the relief valve inlet joint. VT-1 visual examination results acceptable.
5) Performed VT-1 visual examination on nine (9) existing studs for the relief valve inlet joint. VT-1 visual examination results acceptable.
6) Reinstalled existing relief valve with Serial No N63790-03-0051 (Previous/Original Serial No N63790-00-0051) with set pressure of 1185 Psig at rated temperature of 575^{0} F.
7) Installed VT-1 visually examined twelve (12) new standard (regular) nuts for the relief valve inlet joint. Note - None of the existing "Superbolt" nuts were reused.
8) Installed VT-1 visually examined three (3) new studs for the relief valve inlet joint. Note - Nine (9) existing studs were reused.
9) Installed sixteen (16) new standard (regular) bolts for the relief valve outlet joint. Note - None of the existing "Superbolt" bolts were reused.
10) Performed VT-2 visual examination during pressure test to confirm pressure boundary integrity of the relief valve inlet joint. No evidence of leakage during the pressure test.

NOTES -

1) The applicable ASME Code Cases, if any are listed on the ASME Code Data Reports.
2) * Company name changed from Washington Public Power Supply System (WPPSS) to Energy Northwest (EN) in 1999.

PLAN No 2-2239

ENERGY NORTHWEST
People · Vision · Solutions

FORM NIS-2 OWNER'S REPORT FOR REPAIR/REPLACEMENT ACTIVITY (Back)

8 Tests Conducted: Hydrostatic [ ] **Pneumatic** [ ] **Nominal Operating Pressure** [ ] **Other** [*]
Exempt [ ] **Test Pressure:** 1020 Psig **Test Temperature:** 165° F

9. Remarks (Applicable Manufacturer's Data Reports to be attached): 1) * The test pressure and the test temperature on the relief valve inlet joint was recorded during ASME Section XI pressure test which was performed in accordance with PPM No OSP-RPV-R801 "Reactor Pressure Vessel Leakage Test".

CERTIFICATE OF COMPLIANCE

I certify that the statements made in this Owner's Report are correct and that this conforms to the requirements of the ASME Code, Section XI.
Type Code Symbol Stamp: Not Applicable
Certificate Of Authorization No.: Not Applicable
Expiration Date: Not Applicable

Prepared By Kuldip Singh - Program Lead Engineer (PLE) ***Signed By*** Kuldip Singh - Program Lead Engineer (PLE)

Date 7/15/09 ***Date*** 7/15/09

CERTIFICATE OF INSERVICE INSPECTION

I, the undersigned, holding a valid commission issued by the National Board of Boiler and Pressure Vessel Inspectors and the State of Washington ***and employed by*** Hartford Steam Boiler Of Connecticut of Hartford, Connecticut ***have inspected the components described in this Owner's Report during the period*** 5-4-09 ***to*** 8-10-09 ***and state to the best of my knowledge and belief, the Owner has performed examinations and taken corrective measures described in this Owner's Report in accordance with the requirements of the ASME Code, Section XI.***
By signing this certificate neither the Inspector nor his employer makes any warranty, expressed or implied, concerning the examinations and corrective measures described in this Owner's Report. Furthermore, neither the Inspector nor his employer shall be liable in any manner for any personal injury or property damage or a loss of any kind arising from or connected with this inspection.

Frank A. Allegri — Inspector's Signature ***Commissions*** 13324 WANT — National Board, State, and Endorsements

Date 8-10-2009

PLAN No 2-2240

ENERGY NORTHWEST
People·Vision·Solutions

FORM NIS-2 OWNER'S REPORT FOR REPAIR/REPLACEMENT ACTIVITY
As Required By The Provisions Of The ASME Code Section XI

1. Owner: Energy Northwest
Address: Columbia Generating Station, North Power Plant Loop, Richland, Washington, 99352
2. Plant: Columbia Generating Station
Address: Columbia Generating Station, North Power Plant Loop, Richland, Washington, 99352

Date: 07/15/2009
Sheet: 1 Of
Unit: Not Applicable

3. (a) Work Performed By: Energy Northwest
(b) Repair/Replacement Organization P.O. No, Job No, etc.: Energy Northwest
(c) Type Code Symbol Stamp: Not Applicable
(d) Certificate Of Authorization No.: Not Applicable
(e) Expiration Date: Not Applicable
4. Identification Of System: Main Steam (MS) System
5. (a) Applicable Construction Code: ASME Section III, Code Class 1, 1971 Edition with Winter 1973 Addenda, Code Case: Note 1
(b) Applicable Edition Of ASME Section XI Used For Repair/Replacement Activity: 2001 Edition with 2003 Addenda
(c) Applicable ASME Section XI Case(s): None
6. Identification Of Components

Name Of Component	Name Of Manufacturer	Manufacturer's Serial No	National Board No	Other I.D.	Year Built	Corrected, Removed Or Installed	ASME Code Stamped (Yes Or No) Code Class
B22-G001A	WPPSS*	B22-G001A-P1	N/A	N/A	1983	See Item 7 Below	Yes, Code Class 1

7. Description Of Work Performed: Removed and reinstalled existing relief valve MS-RV-3A The work was performed as follows:

1) Removed twelve (12) existing "Superbolt" nuts for the relief valve inlet joint.
2) Removed sixteen (16) existing "Superbolt" bolts for the relief valve outlet joint.
3) Performed VT-1 visual examination on twelve (12) new standard (regular) nuts for the relief valve inlet joint. VT-1 visual examination results acceptable.
4) Performed VT-1 visual examination on one (1) new stud for the relief valve inlet joint. VT-1 visual examination results acceptable.
5) Reinstalled existing relief valve with Serial No N63790-03-0058 (Previous/Original Serial No N63790-00-0058) with set pressure of 1195 Psig at rated temperature of 575° F.
6) Installed VT-1 visually examined twelve (12) new standard (regular) nuts for the relief valve inlet joint. Note - None of the existing "Superbolt" nuts were reused.
7) Installed VT-1 visually examined one (1) new stud for the relief valve inlet joint. Note - Eleven (11) existing studs were reused.
8) Installed sixteen (16) new standard (regular) bolts for the relief valve outlet joint. Note - None of the existing "Superbolt" bolts were reused.
9) Performed VT-2 visual examination during pressure test to confirm pressure boundary integrity of the relief valve inlet joint. No evidence of leakage during the pressure test.

NOTES -

1) The applicable ASME Code Cases, if any are listed on the ASME Code Data Reports.
2) * Company name changed from Washington Public Power Supply System (WPPSS) to Energy Northwest (EN) in 1999.

PLAN No 2-2240

ENERGY NORTHWEST
People·Vision·Solutions

FORM NIS-2 OWNER'S REPORT FOR REPAIR/REPLACEMENT ACTIVITY (Back)

8 Tests Conducted: Hydrostatic ☐ **Pneumatic** ☐ **Nominal Operating Pressure** ☐ **Other** ☐ *
Exempt ☐ **Test Pressure:** 1020 Psig **Test Temperature:** 165° F

9. Remarks (Applicable Manufacturer's Data Reports to be attached): 1) * The test pressure and the test temperature on the relief valve inlet joint was recorded during ASME Section XI pressure test which was performed in accordance with PPM No OSP-RPV-R801 "Reactor Pressure Vessel Leakage Test".

CERTIFICATE OF COMPLIANCE

I certify that the statements made in this Owner's Report are correct and that this conforms to the requirements of the ASME Code, Section XI.
Type Code Symbol Stamp: Not Applicable
Certificate Of Authorization No.: Not Applicable
Expiration Date: Not Applicable

Prepared By Kuldip Singh
Kuldip Singh - Program Lead Engineer (PLE)
Date 7/15/09

Signed By Kuldip Singh
Kuldip Singh - Program Lead Engineer (PLE)
Date 7/15/09

CERTIFICATE OF INSERVICE INSPECTION

I, the undersigned, holding a valid commission issued by the National Board of Boiler and Pressure Vessel Inspectors and the State of Washington ***and employed by*** Hartford Steam Boiler Of Connecticut of Hartford, Connecticut ***have inspected the components described in this Owner's Report during the period*** 5-4-09 ***to*** 8-10-09 ***and state to the best of my knowledge and belief, the Owner has performed examinations and taken corrective measures described in this Owner's Report in accordance with the requirements of the ASME Code, Section XI.***
By signing this certificate neither the Inspector nor his employer makes any warranty, expressed or implied, concerning the examinations and corrective measures described in this Owner's Report. Furthermore, neither the Inspector nor his employer shall be liable in any manner for any personal injury or property damage or a loss of any kind arising from or connected with this inspection.

Frank R Allegrini
Inspector's Signature

Commissions 13324 WANI
National Board, State, and Endorsements

Date 8-10-2009

PLAN No 2-2241

ENERGY NORTHWEST
People·Vision·Solutions

FORM NIS-2 OWNER'S REPORT FOR REPAIR/REPLACEMENT ACTIVITY
As Required By The Provisions Of The ASME Code Section XI

Date: 07/20/2009
Sheet: 1 Of 1
Unit: Not Applicable

1. **Owner:** Energy Northwest
   Address: Columbia Generating Station, North Power Plant Loop, Richland, Washington, 99352
2. **Plant:** Columbia Generating Station
   Address: Columbia Generating Station, North Power Plant Loop, Richland, Washington, 99352
3. **(a) Work Performed By:** Energy Northwest
   (b) Repair/Replacement Organization P.O. No, Job No, etc.: Energy Northwest
   (c) Type Code Symbol Stamp: Not Applicable
   (d) Certificate Of Authorization No.: Not Applicable
   (e) Expiration Date: Not Applicable
4. **Identification Of System:** Residual Heat Removal (RHR) System
5. **(a) Applicable Construction Code:** ASME Section III, Code Class 1, 1974 Edition with Winter 1976 Addenda, Code Case: Note 1
   (b) Applicable Edition Of ASME Section XI Used For Repair/Replacement Activity: 2001 Edition with 2003 Addenda
   (c) Applicable ASME Section XI Code Case(s): None
6. **Identification Of Components**

Name Of Component	Name Of Manufacturer	Manufacturer's Serial No	National Board No	Other I.D.	Year Built	Corrected, Removed Or Installed	ASME Code Stamped (Yes Or No) Code Class
RHR-V-209	Borg Warner	31729	N/A	N/A	1879	Corrected (Repaired)	Yes, Code Class 1

7. **Description Of Work:** Performed repair/replacement work on valve RHR-V-209, Serial No 31729. The repair/replacement work was performed as follows:
   1) Cut/ground valve body to bonnet seal weld.
   2) Prepped valve body cut/ground surfaces.
   3) Performed liquid penetrant (PT) examination on the final valve body prepped surfaces. Liquid penetrant (PT) examination results acceptable.
   4) Prepped valve bonnet cut/ground surfaces.
   5) Performed liquid penetrant (PT) examination on the final valve bonnet prepped surfaces. Liquid penetrant (PT) examination results acceptable.
   6) Installed replacement valve disc.
   7) Reassemble valve parts.
   8) Made valve body to bonnet seal weld.
   9) Performed visual examination on the final valve body to bonnet seal weld. Visual examination results acceptable.
   10) Performed liquid penetrant (PT) examination on the final valve body to bonnet seal weld. Liquid penetrant (PT) examination results acceptable.

NOTES -

1) The applicable ASME Code Cases, if any are listed on the ASME Code Data Report.

PLAN No 2-2241

ENERGY NORTHWEST
People · Vision · Solutions

FORM NIS-2 OWNER'S REPORT FOR REPAIR/REPLACEMENT ACTIVITY (Back)

8 Tests Conducted: Hydrostatic [ ] **Pneumatic** [ ] **Nominal Operating Pressure** [ ] **Other** [ ]
Exempt [X] **Test Pressure:** Psig **Test Temperature:** °F

9. Remarks (Applicable Manufacturer's Data Reports to be attached): None

CERTIFICATE OF COMPLIANCE

I certify that the statements made in this Owner's Report are correct and that this conforms to the requirements of the ASME Code, Section XI.
Type Code Symbol Stamp: Not Applicable
Certificate Of Authorization No.: Not Applicable
Expiration Date: Not Applicable

Prepared By Kuldip Singh — Kuldip Singh - Program Lead Engineer (PLE)
Signed By Kuldip Singh — Kuldip Singh - Program Lead Engineer (PLE)
Date 7/20/09 **Date** 7/20/09

CERTIFICATE OF INSERVICE INSPECTION

I, the undersigned, holding a valid commission issued by the National Board of Boiler and Pressure Vessel Inspectors and the State of _____ and employed by _____ of _____ have inspected the components described in this Owner's Report during the period _____ to _____ and state to the best of my knowledge and belief, the Owner has performed examinations and taken corrective measures described in this Owner's Report in accordance with the requirements of the ASME Code, Section XI.
By signing this certificate neither the Inspector nor his employer makes any warranty, expressed or implied, concerning the examinations and corrective measures described in this Owner's Report. Furthermore, neither the Inspector nor his employer shall be liable in any manner for any personal injury or property damage or a loss of any kind arising from or connected with this inspection.

N/R - Repair/Replacement 1" NPS And Smaller (Small Items) **Commissions** _____
Inspector's Signature — National Board, State, and Endorsements
Date _____

PLAN No 2-2241

ENERGY NORTHWEST
People·Vision·Solutions

FORM NIS-2 OWNER'S REPORT FOR REPAIR/REPLACEMENT ACTIVITY
As Required By The Provisions Of The ASME Code Section XI

1. Owner: Energy Northwest
Address: Columbia Generating Station, North Power Plant Loop, Richland, Washington, 99352
2. Plant: Columbia Generating Station
Address: Columbia Generating Station, North Power Plant Loop, Richland, Washington, 99352

Date: 07/20/2009
Sheet: 1 Of 1
Unit: Not Applicable

3. (a) Work Performed By: Energy Northwest
(b) Repair/Replacement Organization P.O. No, Job No, etc.: Energy Northwest
(c) Type Code Symbol Stamp: Not Applicable
(d) Certificate Of Authorization No.: Not Applicable
(e) Expiration Date: Not Applicable
4. Identification Of System: Residual Heat Removal (RHR) System
5. (a) Applicable Construction Code: ASME Section III, Code Class 1, 1971 Edition with Winter 1973 Addenda, Code Case: Note 1
(b) Applicable Edition Of ASME Section XI Used For Repair/Replacement Activity: 2001 Edition with 2003 Addenda
(c) Applicable ASME Section XI Code Case(s): None
6. Identification Of Components

Name Of Component	Name Of Manufacturer	Manufacturer's Serial No	National Board No	Other I.D.	Year Built	Corrected, Removed Or Installed	ASME Code Stamped (Yes Or No) Code Class
RHR(1)-4A1	WPPSS*	RHR(1)-4A1-P1	N/A	N/A	1983	See Item 7 Below	Yes, Code Class 1

7. Description Of Work: Performed piping work associated with valve RHR-V-209, Serial No 31729. The work was performed as follows:
1) Cut/ground existing socket welds.
2) Performed liquid penetrant (PT) examination on the prepped surfaces. Liquid penetrant (PT) examination results acceptable.
3) Installed replacement piping material such as elbow and pipe.
4) Made required socket welds.
5) Performed visual examination on the final socket welds. Visual examination results acceptable.
6) Performed liquid penetrant (PT) examination on the final socket welds. Liquid penetrant (PT) examination results acceptable.

NOTES -
1) The applicable ASME Code Cases, if any are listed on the ASME Code Data Reports.
2) * Company name changed from Washington Public Power Supply System (WPPSS) to Energy Northwest (EN) in 1999.

PLAN No 2-2241

ENERGY NORTHWEST
People · Vision · Solutions

FORM NIS-2 OWNER'S REPORT FOR REPAIR/REPLACEMENT ACTIVITY (Back)

8 Tests Conducted: Hydrostatic [ ] **Pneumatic** [ ] **Nominal Operating Pressure** [ ] **Other** [ ]
Exempt [X] **Test Pressure:** Psig **Test Temperature:** °F

9. Remarks (Applicable Manufacturer's Data Reports to be attached): None

CERTIFICATE OF COMPLIANCE

I certify that the statements made in this Owner's Report are correct and that this conforms to the requirements of the ASME Code, Section XI.
Type Code Symbol Stamp: Not Applicable
Certificate Of Authorization No.: Not Applicable
Expiration Date: Not Applicable

Prepared By Kuldip Singh — Kuldip Singh - Program Lead Engineer (PLE)
Date 7/20/09

Signed By Kuldip Singh — Kuldip Singh - Program Lead Engineer (PLE)
Date 7/20/09

CERTIFICATE OF INSERVICE INSPECTION

I, the undersigned, holding a valid commission issued by the National Board of Boiler and Pressure Vessel Inspectors and the State of _____ and employed by _____ of _____ have inspected the components described in this Owner's Report during the period _____ to _____ and state to the best of my knowledge and belief, the Owner has performed examinations and taken corrective measures described in this Owner's Report in accordance with the requirements of the ASME Code, Section XI.
By signing this certificate neither the Inspector nor his employer makes any warranty, expressed or implied, concerning the examinations and corrective measures described in this Owner's Report. Furthermore, neither the Inspector nor his employer shall be liable in any manner for any personal injury or property damage or a loss of any kind arising from or connected with this inspection.

N/R - Repair/Replacement 1" NPS And Smaller (Small Items)
Inspector's Signature

Commissions _____
National Board, State, and Endorsements

Date _____

PLAN No 2-2242

ENERGY NORTHWEST
People · Vision · Solutions

FORM NIS-2 OWNER'S REPORT FOR REPAIR/REPLACEMENT ACTIVITY
As Required By The Provisions Of The ASME Code Section XI

Date: 05/27/2009
Sheet: 1 Of 1
Unit: Not Applicable

1. Owner: Energy Northwest
Address: Columbia Generating Station, North Power Plant Loop, Richland, Washington, 99352
2. Plant: Columbia Generating Station
Address: Columbia Generating Station, North Power Plant Loop, Richland, Washington, 99352
3. (a) Work Performed By: Energy Northwest
(b) Repair/Replacement Organization P.O. No, Job No, etc.: Energy Northwest
(c) Type Code Symbol Stamp: Not Applicable
(d) Certificate Of Authorization No.: Not Applicable
(e) Expiration Date: Not Applicable
4. Identification Of System: Residual Heat Removal (RHR) System
5. (a) Applicable Construction Code: ASME Section III, Code Class 2, 1974 Edition with Summer 1975 Addenda, Code Case: Note 1
(b) Applicable Edition Of ASME Section XI Used For Repair/Replacement Activity: 2001 Edition with 2003 Addenda
(c) Applicable ASME Section XI Case(s): None
6. Identification Of Components

Name Of Component	Name Of Manufacturer	Manufacturer's Serial No	National Board No	Other I.D.	Year Built	Corrected, Removed Or Installed	ASME Code Stamped (Yes Or No) Code Class
Rotating Spare	Crosby	N60597-00-0001	N/A	N/A	1980	See Item 7 Below	Yes, Code Class 2
Base	Crosby	N91850-31-0002	N/A	N/A	N/A	Removed	No, Code Class 2
Base	Crosby	N91850-45-0041	N/A	N/A	N/A	Installed	No, Code Class 2
Disc	Crosby	N91855-32-0031	N/A	N/A	N/A	Removed	No, Code Class 2
Disc	Crosby	N91855-51-0101	N/A	N/A	N/A	Installed	No, Code Class 2
Spindle	Crosby	K61719-31-0005	N/A	N/A	N/A	Removed	No, Code Class 2
Spindle	Crosby	K61719-39-0033	N/A	N/A	N/A	Installed	No, Code Class 2

7. Description Of Work Performed: Refurbished rotating spare relief valve Serial No N60597-00-0001 (RHR-RV-1A). The replacement (refurbishment) work was performed as follows:

1) Removed existing base Serial No N91850-31-0002 from the relief valve.
2) Installed replacement base Serial No N91850-45-0041 in the relief valve.
3) Removed existing disc Serial No N91855-32-0031 from the relief valve.
4) Installed replacement disc Serial No N91855-51-0101 in the relief valve.
5) Removed existing spindle Serial No K61719-31-0005 from the relief valve.
6) Installed replacement spindle Serial No K61719-39-0033 in the relief valve.

NOTES -

1) The applicable ASME Code Cases, if any are listed on the ASME Code Data Reports.

PLAN No 2-2242

ENERGY NORTHWEST
People · Vision · Solutions

FORM NIS-2 OWNER'S REPORT FOR REPAIR/REPLACEMENT ACTIVITY (Back)

8 Tests Conducted: Hydrostatic [ ] **Pneumatic** [ ] **Nominal Operating Pressure** [ ] **Other** [ ]
Exempt [X] **Test Pressure:** Psig **Test Temperature:** °F

9. Remarks (Applicable Manufacturer's Data Reports to be attached): None

CERTIFICATE OF COMPLIANCE

I certify that the statements made in this Owner's Report are correct and that this conforms to the requirements of the ASME Code, Section XI.
Type Code Symbol Stamp: Not Applicable
Certificate Of Authorization No.: Not Applicable
Expiration Date: Not Applicable

Prepared By Kuldip Singh - Program Lead Engineer (PLE) ***Signed By*** Kuldip Singh - Program Lead Engineer (PLE)

Date 5/29/09 ***Date*** 5/29/09

CERTIFICATE OF INSERVICE INSPECTION

I, the undersigned, holding a valid commission issued by the National Board of Boiler and Pressure Vessel Inspectors and the State of Washington ***and employed by*** Hartford Steam Boiler Of Connecticut of Hartford, Connecticut ***have inspected the components described in this Owner's Report during the period*** 4/7/2009 ***to*** 6/4/2009 ***and state to the best of my knowledge and belief, the Owner has performed examinations and taken corrective measures described in this Owner's Report in accordance with the requirements of the ASME Code, Section XI.***
By signing this certificate neither the Inspector nor his employer makes any warranty, expressed or implied, concerning the examinations and corrective measures described in this Owner's Report. Furthermore, neither the Inspector nor his employer shall be liable in any manner for any personal injury or property damage or a loss of any kind arising from or connected with this inspection.

Inspector's Signature ***Commissions*** 13172 WANI
National Board, State, and Endorsements

Date 6/4/2009

ENERGY NORTHWEST
People · Vision · Solutions

FORM NIS-2 OWNER'S REPORT FOR REPAIR/REPLACEMENT ACTIVITY
As Required By The Provisions Of The ASME Code Section XI

1. Owner: Energy Northwest
Address: Columbia Generating Station, North Power Plant Loop, Richland, Washington, 99352
2. Plant: Columbia Generating Station
Address: Columbia Generating Station, North Power Plant Loop, Richland, Washington, 99352

Date: 06/21/2009
Sheet: 1 Of 2
Unit: Not Applicable

3. (a) Work Performed By: Energy Northwest
(b) Repair/Replacement Organization P.O. No, Job No, etc.: Energy Northwest
(c) Type Code Symbol Stamp: Not Applicable
(d) Certificate Of Authorization No.: Not Applicable
(e) Expiration Date: Not Applicable
4. Identification Of System: Reactor Closed Cooling (Water) (RCC) System
5. (a) Applicable Construction Code: ASME Section III, Code Class 3, 1971 Edition with Winter 1973 Addenda, Code Case: Note 1
(b) Applicable Edition Of ASME Section XI Used For Repair/Replacement Activity: 2001 Edition with 2003 Addenda
(c) Applicable ASME Section XI Code Case(s): None
6. Identification Of Components

Name Of Component	Name Of Manufacturer	Manufacturer's Serial No	National Board No	Other I.D.	Year Built	Corrected, Removed Or Installed	ASME Code Stamped (Yes Or No) Code Class
RCC(3)-1	WPPSS*	RCC(3)-1-P1	N/A	N/A	1983	See Item 7 Below	Yes, Code Class 3
RCC(36)-1	WPPSS*	RCC(36)-1-P1	N/A	N/A	1983	See Item 7 Below	Yes, Code Class 3

7. Description Of Work: Replaced piping material. The replacement work was performed as follows:

DWG No RCC-2037-1 - TOP CONNECTION

1) Removed existing piping material.
2) Installed replacement piping material such as coupling and pipe.
3) Made required welds.
4) Performed visual examination on the final welds. Visual examination results acceptable.
5) Installed four (4) replacement studs.
6) Installed eight (8) replacement nuts.

DWG No RCC-2037-1 - BOTTOM CONNECTION

1) Removed existing piping material.
2) Installed replacement piping material such as coupling and pipe.
3) Made required welds.
4) Performed visual examination on the final welds. Visual examination results acceptable.
5) Installed four (4) replacement studs.
6) Installed eight (8) replacement nuts.

DWG No RCC-2039-2 - TOP CONNECTION

1) Removed existing piping material.
2) Installed replacement piping material such as coupling, elbow and pipe.

Continued On Sheet 2 of 2

PLAN No 2-2244

ENERGY NORTHWEST
People · Vision · Solutions

FORM NIS-2 OWNER'S REPORT FOR REPAIR/REPLACEMENT ACTIVITY (Back)

8. Tests Conducted: Hydrostatic [ ] Pneumatic [ ] Nominal Operating Pressure [ ] Other [ ]
Exempt [X] Test Pressure: Psig Test Temperature: °F

9. Remarks (Applicable Manufacturer's Data Reports to be attached): None

CERTIFICATE OF COMPLIANCE

I certify that the statements made in this Owner's Report are correct and that this conforms to the requirements of the ASME Code, Section XI.
Type Code Symbol Stamp: Not Applicable
Certificate Of Authorization No.: Not Applicable
Expiration Date: Not Applicable

Prepared By Kuldip Singh - Program Lead Engineer (PLE) **Signed By** Kuldip Singh - Program Lead Engineer (PLE)

Date 6/21/09 **Date** 6/21/09.

CERTIFICATE OF INSERVICE INSPECTION

I, the undersigned, holding a valid commission issued by the National Board of Boiler and Pressure Vessel Inspectors and the State of _____ and employed by _____ of _____ have inspected the components described in this Owner's Report during the period _____ to _____ and state to the best of my knowledge and belief, the Owner has performed examinations and taken corrective measures described in this Owner's Report in accordance with the requirements of the ASME Code, Section XI.
By signing this certificate neither the Inspector nor his employer makes any warranty, expressed or implied, concerning the examinations and corrective measures described in this Owner's Report. Furthermore, neither the Inspector nor his employer shall be liable in any manner for any personal injury or property damage or a loss of any kind arising from or connected with this inspection.

Not Required - Repair/Replacement 1" NPS And Smaller
Inspector's Signature

Commissions _____
National Board, State, and Endorsements

Date _____

PLAN No 2-2244

ENERGY NORTHWEST
People·Vision·Solutions

FORM NIS-2 OWNER'S REPORT FOR REPAIR/REPLACEMENT ACTIVITY
As Required By The Provisions Of The ASME Code Section XI

Date: 06/21/2009
Sheet: 2 Of 2
Unit: Not Applicable

1. Owner: Energy Northwest
Address: Columbia Generating Station, North Power Plant Loop, Richland, Washington, 99352
2. Plant: Columbia Generating Station
Address: Columbia Generating Station, North Power Plant Loop, Richland, Washington, 99352
3. (a) Work Performed By: Energy Northwest
(b) Repair/Replacement Organization P.O. No, Job No, etc.: Energy Northwest
(c) Type Code Symbol Stamp: Not Applicable
(d) Certificate Of Authorization No.: Not Applicable
(e) Expiration Date: Not Applicable
4. Identification Of System: Reactor Closed Cooling (Water) (RCC) System
5. (a) Applicable Construction Code: ASME Section III, Code Class 3, 1971 Edition with Winter 1973 Addenda, Code Case: Note 1
(b) Applicable Edition Of ASME Section XI Used For Repair/Replacement Activity: 2001 Edition with 2003 Addenda
(c) Applicable ASME Section XI Code Case(s): None
6. Identification Of Components

Name Of Component	Name Of Manufacturer	Manufacturer's Serial No	National Board No	Other I.D.	Year Built	Corrected, Removed Or Installed	ASME Code Stamped (Yes Or No) Code Class
RCC(3)-1	WPPSS*	RCC(3)-1-P1	N/A	N/A	1983	See Item 7 Below	Yes, Code Class 3
RCC(36)-1	WPPSS*	RCC(36)-1-P1	N/A	N/A	1983	See Item 7 Below	Yes, Code Class 3

7. Description Of Work: Continuation From Sheet 1 of 2

DWG No RCC-2039-2 - TOP CONNECTION

3) Made required welds.
4) Performed visual examination on the final welds. Visual examination results acceptable.
5) Installed four (4) replacement studs.
6) Installed eight (8) replacement nuts.

DWG No RCC-2039-2 - BOTTOM CONNECTION

1) Removed existing piping material.
2) Installed replacement piping material such as coupling, elbow and pipe.
3) Made required welds.
4) Performed visual examination on the final welds. Visual examination results acceptable.
5) Installed four (4) replacement studs.
6) Installed eight (8) replacement nuts.

NOTES

1) The applicable ASME Code Cases, if any are listed on the ASME Code Data Reports.
2) * Company name changed from Washington Public Power Supply System (WPPSS) to Energy Northwest (EN) in 1999.

PLAN No 2-2245

ENERGY NORTHWEST
People · Vision · Solutions

FORM NIS-2 OWNER'S REPORT FOR REPAIR/REPLACEMENT ACTIVITY
As Required By The Provisions Of The ASME Code Section XI

1. Owner: Energy Northwest
Address: Columbia Generating Station, North Power Plant Loop, Richland, Washington, 99352
2. Plant: Columbia Generating Station
Address: Columbia Generating Station, North Power Plant Loop, Richland, Washington, 99352

Date: 05/28/2009
Sheet: 1 Of 1
Unit: Not Applicable

3. (a) Work Performed By: Energy Northwest
(b) Repair/Replacement Organization P.O. No, Job No, etc.: Energy Northwest
(c) Type Code Symbol Stamp: Not Applicable
(d) Certificate Of Authorization No.: Not Applicable
(e) Expiration Date: Not Applicable
4. Identification Of System: Control Room Chilled Water (CCH) System
5. (a) Applicable Construction Code: ASME Section III, Code Class 3, 1971 Edition with Winter 1973 Addenda, Code Case: Note 1
(b) Applicable Edition Of ASME Section XI Used For Repair/Replacement Activity: 2001 Edition with 2003 Addenda
(c) Applicable ASME Section XI Case(s): None
6. Identification Of Components

Name Of Component	Name Of Manufacturer	Manufacturer's Serial No	National Board No	Other I.D.	Year Built	Corrected, Removed Or Installed	ASME Code Stamped (Yes Or No) Code Class
SW(21)-2	WPPSS *	SW(21)-2-P1	N/A	N/A	1983	See Item 7 Below	Yes, Code Class 3
CCH-RD-1A	CDC	Serial No 8031165A	N/A	N/A	2004	Removed	No, Code Class 3
CCH-RD-1A	CDC	Serial No 8031165A	N/A	N/A	2004	Installed	No, Code Class 3

7. Description Of Work Performed: Replaced rupture disc for CCH-RD-1A. The replacement work was performed as follows:
1) Removed existing rupture disc, rupture disc holders, studs and nuts.
2) Reinstalled existing rupture disc holders.
3) Installed new rupture disc.
4) Reinstalled existing slip on flange.
5) Reinstalled existing studs.
6) Reinstalled existing nuts.
7) Performed VT-2 visual examination during pressure test to confirm pressure boundary integrity of the bolted joint. No evidence of leakage during the pressure test.

NOTES
1) The applicable ASME Code Cases, if any are listed on the ASME Code Data Reports.
2) * Company name changed from Washington Public Power Supply System (WPPSS) to Energy Northwest (EN) in 1999.

PLAN No 2-2245

ENERGY NORTHWEST
People · Vision · Solutions

FORM NIS-2 OWNER'S REPORT FOR REPAIR/REPLACEMENT ACTIVITY (Back)

8 Tests Conducted: Hydrostatic ☐ **Pneumatic** ☐ **Nominal Operating Pressure** ☑ **Other** ☐
Exempt ☐ **Test Pressure:** 7 Psig **Test Temperature:** 52° F

9. Remarks (Applicable Manufacturer's Data Reports to be attached): See attached NR-1 Code Data Report for the new replacement rupture disc.

CERTIFICATE OF COMPLIANCE

I certify that the statements made in this Owner's Report are correct and that this conforms to the requirements of the ASME Code, Section XI.
Type Code Symbol Stamp: Not Applicable
Certificate Of Authorization No.: Not Applicable
Expiration Date: Not Applicable

Prepared By Kuldip Singh - Program Lead Engineer (PLE) ***Signed By*** Kuldip Singh - Program Lead Engineer (PLE)

Date 5/29/09 ***Date*** 5/29/09

CERTIFICATE OF INSERVICE INSPECTION

I, the undersigned, holding a valid commission issued by the National Board of Boiler and Pressure Vessel Inspectors and the State of Washington ***and employed by*** Hartford Steam Boiler Of Connecticut of Hartford, Connecticut ***have inspected the components described in this Owner's Report during the period*** 4/23/2009 ***to*** 6/5/2009 ***and state to the best of my knowledge and belief, the Owner has performed examinations and taken corrective measures described in this Owner's Report in accordance with the requirements of the ASME Code, Section XI.***
By signing this certificate neither the Inspector nor his employer makes any warranty, expressed or implied, concerning the examinations and corrective measures described in this Owner's Report. Furthermore, neither the Inspector nor his employer shall be liable in any manner for any personal injury or property damage or a loss of any kind arising from or connected with this inspection.

Inspector's Signature ***Commissions*** 13172 WANI
National Board, State, and Endorsements

Date 6/5/2009

Plan No. 2-2245

Philip Rupp
5/29/09

FORM NR-1

MANUFACTURERS' DATA REPORT OF RUPTURE DISCS

As required by the provisions of the ASME Code Rules

1. Manufactured by Continental Disc Corporation - Liberty, Mo. 64068
   Name and address of Manufacture

IDENTIFICATION OF RUPTURE DISC

2. Manufacturer's Type or Style No. ULTRX Serial No. 8031165A
3. Disc Dimensional Characteristics:

   Inlet Size 3" Outlet Size 3" Relief Area 7.35 SQ. IN.
4. Material Specification 316 SS DISC, 316 SS RINGS
5. Manufacturer's Drawing No. N/A

AUTHORIZATION TEST RESULTS

6. Burst Pressure 100 (psig) Max. 99.5 (psig) Min.
7. Coincident Disc Temperature 72 F (F)
8. Fluid Used in Tests Air
9. Cyclic Test Results (if required) n/a

CERTIFICATION

10. Place of Test Continental Disc Corporation Date of Test 3/4/04

We certify the above data to be correct and that the requirements of the ASME Code rules have been met.

Signed Continental Disc Corporation By Dean Dachenhausen Date 3/10/04
Dean Dachenhausen
Director of Quality Assurance

(12/80) This form (E00026) can be obtained from the Order Dept., ASME, 345 East 47th St., New York, N.Y. 10017

PLAN No 2-2246

ENERGY NORTHWEST
People·Vision·Solutions

FORM NIS-2 OWNER'S REPORT FOR REPAIR/REPLACEMENT ACTIVITY
As Required By The Provisions Of The ASME Code Section XI

1. Owner: Energy Northwest
Address: Columbia Generating Station, North Power Plant Loop, Richland, Washington, 99352
2. Plant: Columbia Generating Station
Address: Columbia Generating Station, North Power Plant Loop, Richland, Washington, 99352

Date: 06/21/2009
Sheet: 1 Of 1
Unit: Not Applicable

3. (a) Work Performed By: Energy Northwest
(b) Repair/Replacement Organization P.O. No, Job No, etc.: Energy Northwest
(c) Type Code Symbol Stamp: Not Applicable
(d) Certificate Of Authorization No.: Not Applicable
(e) Expiration Date: Not Applicable
4. Identification Of System: Residual Heat Removal (RHR) System
5. (a) Applicable Construction Code: ASME Section III, Code Class 1, 1971 Edition with Winter 1972 Addenda, Code Case: Note 1
(b) Applicable Edition Of ASME Section XI Used For Repair/Replacement Activity: 2001 Edition with 2003 Addenda
(c) Applicable ASME Section XI Case(s): None
6. Identification Of Components

Name Of Component	Name Of Manufacturer	Manufacturer's Serial No	National Board No	Other I.D.	Year Built	Corrected, Removed Or Installed	ASME Code Stamped (Yes Or No) Code Class
RHR-V-50A	Velan	0415	N/A	N/A	1977	See Item 7 Below	Yes, Code Class 1

7. Description Of Work Performed: Performed replacement work on existing valve RHR-V-50A, Serial No 0415. The replacement work was performed as follows:

1) Removed all existing valve body to bonnet nuts.
2) Removed all existing valve body to bonnet studs.
3) Prepped valve body stud holes on as needed basis.
4) Performed VT-1 visual examination on the valve body to bonnet replacement nuts for ISI (PSI). VT-1 visual examination results acceptable.
5) Performed VT-1 visual examination on the valve body to bonnet "Standard" replacement studs for ISI (PSI). VT-1 visual examination results acceptable.
6) Performed VT-1 visual examination on the valve body to bonnet "Stepped" replacement studs for ISI (PSI). VT-1 visual examination results acceptable.
7) Performed VT-3 visual examination on the accessible valve internal body surfaces for ISI (PSI). VT-3 visual examination results acceptable.
8) Performed VT-3 visual examination on the valve internal bonnet surfaces for ISI (PSI). VT-3 visual examination results acceptable.
9) Installed nine (9) VT-1 visual examined "Standard" replacement studs for the valve body to bonnet joint.
10) Installed three (3) VT-1 visual examined "Stepped" replacement studs for the valve body to bonnet joint.
11) Installed twelve (12) VT-1 visual examined replacement nuts for the valve body to bonnet joint.
12) Performed VT-2 visual examination during pressure test to confirm pressure boundary integrity of the joint. No evidence of leakage during the pressure test.

NOTES -

1) The applicable ASME Code Cases, if any are listed on the ASME Code Data Reports.

PLAN No 2-2246

ENERGY NORTHWEST
People·Vision·Solutions

FORM NIS-2 OWNER'S REPORT FOR REPAIR/REPLACEMENT ACTIVITY (Back)

8 Tests Conducted: Hydrostatic ☐ **Pneumatic** ☐ **Nominal Operating Pressure** ☐ **Other** ☐ *
Exempt ☐ **Test Pressure:** 1020 Psig **Test Temperature:** 165° F

9. Remarks (Applicable Manufacturer's Data Reports to be attached): 1) * The test pressure and the test temperature on the valve body to bonnet joint was recorded during ASME Section XI pressure test which was performed in accordance with PPM No OSP-RPV-R801 "Reactor Pressure Vessel Leakage Test".

CERTIFICATE OF COMPLIANCE

I certify that the statements made in this Owner's Report are correct and that this conforms to the requirements of the ASME Code, Section XI.
Type Code Symbol Stamp: Not Applicable
Certificate Of Authorization No.: Not Applicable
Expiration Date: Not Applicable

Prepared By Kuldip Singh - Program Lead Engineer (PLE) ***Signed By*** Kuldip Singh - Program Lead Engineer (PLE)

Date 6/21/09 ***Date*** 6/21/09

CERTIFICATE OF INSERVICE INSPECTION

I, the undersigned, holding a valid commission issued by the National Board of Boiler and Pressure Vessel Inspectors and the State of Washington ***and employed by*** Hartford Steam Boiler Of Connecticut of Hartford, Connecticut ***have inspected the components described in this Owner's Report during the period*** 5/20/2009 ***to*** 6/25/2009 ***and state to the best of my knowledge and belief, the Owner has performed examinations and taken corrective measures described in this Owner's Report in accordance with the requirements of the ASME Code, Section XI.***
By signing this certificate neither the Inspector nor his employer makes any warranty, expressed or implied, concerning the examinations and corrective measures described in this Owner's Report. Furthermore, neither the Inspector nor his employer shall be liable in any manner for any personal injury or property damage or a loss of any kind arising from or connected with this inspection.

Inspector's Signature ***Commissions*** 13172 WANI
National Board, State, and Endorsements

Date 6/25/2009

FORM NIS-2 OWNER'S REPORT FOR REPAIR/REPLACEMENT ACTIVITY

As Required by the Provisions of the ASME Code Section XI

1. **Owner:** Energy Northwest
   Address P.O. Box 968
   Richland, WA 99352

   Date: 7/20/09

   Sheet: 1 of 2

2. **Plant:** Columbia Generating Station
   Address 76 North Power Plant Loop
   Richland, WA 99354

   Unit: 2

   Repair/Replacement Organization Work Order No. 01168363
   Work Plan No. 2-2247

3. **Work Performed by:** Energy Northwest
   Address: 76 North Power Plant Loop
   Richland, WA 99354

   Type Code Symbol Stamp: Not Applicable
   Authorization No. Not Applicable
   Expiration Date: Not Applicable

4. **Identification of System:** Reactor Core Isolation Cooling (RCIC)

5. (a) **Applicable Construction Code:** ASME Section III **Edition:** 1971 **Addenda:** W73 **Code Case:** (see Data Report)
   (b) **Applicable Edition of Section XI Used for Repair/Replacement Activity:** 2001 **Addenda:** 2003
   (c) **Applicable Section XI Code Case(s):** N/A

6. **Identification of Components:**

Name of Component	*Name of Manufacturer*	*Manufacturer Serial No.*	*NB No.*	*Other No.*	*Year Built*	*Corrected, Removed, or Installed*	*ASME Code Stamped (Yes or No)*
Valve: RCIC-V-54	Flowserve Corp.	E959R-1-2	N/A	N/A	2003	Removed	Yes
Valve: RCIC-V-54	Flowserve Corp.	80BJV	N/A	N/A	2008	Installed	Yes

7. **Description of Work:**

RCIC-V-54 valve was replaced. The removed and installed RCIC-V-54 valves were constructed to the 1974 Edition with Summer 1975 Addenda of ASME Section III (Code Class 2). Piping System RCIC(13)-4CL2-P1 in which RCIC-V-54 is installed was constructed/installed in accordance with the 1971 Edition with Winter 1973 Addenda of ASME Section III (Code Class 2). Upon welded installation successful final NDE (MT) Examination was performed.

References: Weld Record No. 2-10676; Magnetic Particle Examination Data Sheet Report No. 6-09-7-25 and 6-09-7-14

8. **Test Conducted:** **Hydrostatic** ☐ **Pneumatic** ☐ **Nominal Operating Pressure** ☐ **Exempt** ☑

   Other ☐ **Pressure (psi):** N/A **Test Temperature (°F):** N/A

FORM NIS-2 OWNER'S REPORT FOR REPAIR/REPLACEMENT ACTIVITY

As Required by the Provisions of the ASME Code Section XI

FORM NIS-2 (Back)

9. **Remarks:**

No ANII involvement was required (NPS 1 and under) in accordance with IWA-4130.

Replacement Valve (Serial No. 80BJV) NPV-1 ASME Code Data Report applicable to this Repair/Replacement Activity is attached to this Form.

CERTIFICATE OF COMPLIANCE

I certify that the statements made in the report are correct and that this conforms to the requirements of the ASME Code, Section XI.

Type Code Symbol Stamp: Not Applicable

Certificate of Authorization No.: Not Applicable

Expiration Date: Not Applicable

Signed: PLE

Owner or Owner's Designee, Title

Date: 7/20/09

CERTIFICATE OF INSERVICE INSPECTION

I, the undersigned, holding a valid commission issued by the National Board of Boiler and Pressure Vessel Inspectors and the State or Province of Washington and employed by Hartford Steam Boiler of Connecticut of Hartford, Connecticut have inspected the components described in this Owner's Report during the period _____ to _____, and state that to the best of my knowledge and belief, the Owner has performed examinations and taken corrective measures described in this Owner's Report in accordance with the requirements of the ASME Code, Section XI.

By signing this certificate neither the Inspector nor his employer makes any warranty, expressed or implied, concerning the examinations and corrective measures described in this Owner's Report. Furthermore, neither the Inspector nor his employer shall be liable in any manner for any personal injury or property damage or a loss of any kind arising from or connected with this inspection.

Not Required

Inspector's Signature

Commissions: _____

National Board, State, Province, and Endorsements

Date: _____

PLAN NO. 2-2247

Philip Smith 8/3/09

FORM NPV-1 CERTIFICATE HOLDERS' DATA REPORT FOR NUCLEAR PUMPS OR VALVES*
As Required by the Provisions of the ASME Code, Section III, Division 1

1. Manufactured and certified by Flowserve Corporation, 1900 South Saunders St. Raleigh, NC 27603 (name and address of N Certificate Holder)
2. Manufactured for Energy Northwest PO Box 968 Richland, WA 99352-0968 (name and address of Purchaser)
3. Location of installation Columbia Generating Station 76 North Power Plant Loop Richland, WA 99352 (name and address)
4. Model No., Series No., or Type 1500 Drawing 78560 Rev. K CRN N/A
5. ASME Code, Section III, Division 1: 1974 (edition) Summer 1975 (addenda date) 2 (class) N/A (Code Case no.)
6. Pump or valve Valve Nominal inlet size 1 (in.) Outlet size 1 (in.)
7. Material:
   (a) valve Body SA105 Bonnet SA564-630 H1100 Disk CoCr #6 Bolting N/A
   (b) pump Casing ____ Cover ____ Bolting ____

(a) Cert. Holder's Serial No.	(b) Nat'l Board No.	(c) Body/Casing Serial No.	(d) Bonnet/Cover Serial No.	(e) Disk Serial No.
80BJV	N/A	CF-07-2595-1	18897-3	06-10238-7

RCIC-V-54, S/N 80BJV

* Supplemental information in the form of lists, sketches, or drawings may be used provided (1) size is 8½ x 11, (2) information in items 1 through 4 on this Data Report is included on each sheet, (3) each sheet is numbered and the number of sheets is recorded at the top of this form.

2

FORM NPV-1 (Back — Pg. 2 of 2)

Certificate Holder's Serial No. 80BJV

8. Design conditions 3600 (pressure) psi 100 (temperature) °F or valve pressure class 1500

9. Cold working pressure 3750 psi at 100°F

10. Hydrostatic test 5400 psi. Disk differential test pressure 3960 psi

11. Remarks: Sales Order 42355

CERTIFICATION OF DESIGN

Design Specification certified by J.R. Cole P.E. State WA Reg. no. 20653

Design Report certified by _____ P.E. State _____ Reg. no. _____

CERTIFICATE OF COMPLIANCE

We certify that the statements made in this report are correct and that this pump or valve conforms to the rules for construction of the ASME Code, Section III, Division 1.

N Certificate of Authorization No. N-1562 Expires 11-26-09

Date 1/3/08 Name Flowserve Corporation (N Certificate Holder) Signed [signature] (authorized representative)

CERTIFICATE OF INSPECTION

I, the undersigned, holding a valid commission issued by the National Board of Boiler and Pressure Vessel Inspectors and the State or Province of NC and employed by HSB CT of Hartford, CT have inspected the pump, or valve, described in this Data Report on 1/3/08, and state that to the best of my knowledge and belief, the Certificate Holder has constructed this pump, or valve, in accordance with the ASME Code, Section III, Division 1.

By signing this certificate neither the inspector nor his employer makes any warranty, expressed or implied, concerning the component described in this Data Report. Furthermore, neither the inspector nor his employer shall be liable in any manner for any personal injury or property damage or a loss of any kind arising from or connected with this inspection.

Date 1/3/08 Signed [signature] (Authorized Nuclear Inspector) Commissions NC#1421 (Nat'l. Bd. (incl. endorsements) and state or prov. and no.)

3

FORM NIS-2 OWNER'S REPORT FOR REPAIR/REPLACEMENT ACTIVITY

As Required by the Provisions of the ASME Code Section XI

1. **Owner:** Energy Northwest
   Address P.O. Box 968
   Richland, WA 99352

   Date: 6/25/09

   Sheet: 1 of 1

2. **Plant:** Columbia Generating Station
   Address 76 North Power Plant Loop
   Richland, WA 99354

   Unit: 2

   Repair/Replacement Organization Work Order No. 01136438
   Work Plan No. 2-2256

3. **Work Performed by:** Energy Northwest
   Address: 76 North Power Plant Loop
   Richland, WA 99354

   Type Code Symbol Stamp: Not Applicable
   Authorization No. Not Applicable
   Expiration Date: Not Applicable

4. **Identification of System:** High Pressure Core Spray (HPCS)

5. (a) **Applicable Construction Code:** ASME Section III **Edition:** 1971 **Addenda:** S71 **Code Case:** 1516

   (b) **Applicable Edition of Section XI Used for Repair/Replacement Activity:** 2001 **Addenda:** 2003

   (c) **Applicable Section XI Code Case(s):** N/A

6. **Identification of Components:**

Name of Component	*Name of Manufacturer*	*Manufacturer Serial No.*	*NB No.*	*Other No.*	*Year Built*	*Corrected, Removed, or Installed*	*ASME Code Stamped (Yes or No)*
HPCS-V-10	Anchor/Darling	2N-239	N/A	N/A	1974	Corrected	Yes

7. **Description of Work:**

HPCS-V-10 Valve's existing internal Disc and Disc Nut were tack welded together followed by a satisfactory final PT NDE Examination. A System Leakage Test and VT-2 Visual Examination were satisfactorily performed.

(References: AR CR No. 52473 and 52587; Weld Record No. 2-10540; Liquid Penetrant Examination Data Sheet Report No. 5-09-7-80)

8. **Test Conducted:** **Hydrostatic** ☐ **Pneumatic** ☐ **Nominal Operating Pressure** ☑ **Exempt** ☐

   Other ☐ **Pressure (psi):** 500 **Test Temperature (°F):** 100

FORM NIS-2 OWNER'S REPORT FOR REPAIR/REPLACEMENT ACTIVITY

As Required by the Provisions of the ASME Code Section XI

FORM NIS-2 (Back)

9. **Remarks:**

HPCS-V-10 is an ASME Section III Code Class 2 valve (10" 900# Globe).

CERTIFICATE OF COMPLIANCE

I certify that the statements made in the report are correct and that this conforms to the requirements of the ASME Code, Section XI.

Type Code Symbol Stamp: Not Applicable
Certificate of Authorization No.: Not Applicable **Expiration Date:** Not Applicable

Signed: PLE **Date:** 6/25/09
Owner or Owner's Designee, Title

CERTIFICATE OF INSERVICE INSPECTION

I, Link J. Sherman, the undersigned, holding a valid commission issued by the National Board of Boiler and Pressure Vessel Inspectors and the State or Province of Washington and employed by Hartford Steam Boiler of Connecticut of Hartford, Connecticut have inspected the components described in this Owner's Report during the period 3/26/2009 to 7/15/2009, and state that to the best of my knowledge and belief, the Owner has performed examinations and taken corrective measures described in this Owner's Report in accordance with the requirements of the ASME Code, Section XI.

By signing this certificate neither the Inspector nor his employer makes any warranty, expressed or implied, concerning the examinations and corrective measures described in this Owner's Report. Furthermore, neither the Inspector nor his employer shall be liable in any manner for any personal injury or property damage or a loss of any kind arising from or connected with this inspection.

Inspector's Signature **Commissions:** 13172 WANI
National Board, State, Province, and Endorsement

Date: 7/15/2009

FORM NIS-2 OWNER'S REPORT FOR REPAIR/REPLACEMENT ACTIVITY

As Required by the Provisions of the ASME Code Section XI

1. **Owner:** Energy Northwest
   Address P.O. Box 968
   Richland, WA 99352

   Date: 7/20/09

   Sheet: 1 of 2

2. **Plant:** Columbia Generating Station
   Address 76 North Power Plant Loop
   Richland, WA 99354

   Unit: 2

   Repair/Replacement Organization Work Order No. 01166100
   Work Plan No. 2-2260

3. **Work Performed by:** Energy Northwest
   Address: 76 North Power Plant Loop
   Richland, WA 99354

   Type Code Symbol Stamp: Not Applicable
   Authorization No. Not Applicable
   Expiration Date: Not Applicable

4. **Identification of System:** Main Steam (MS)

5. (a) **Applicable Construction Code:** ASME Section III **Edition:** 1971 **Addenda:** W72 **Code Case:** N/A

   (b) **Applicable Edition of Section XI Used for Repair/Replacement Activity:** 2001 **Addenda:** 2003

   (c) **Applicable Section XI Code Case(s):** N/A

6. **Identification of Components:**

Name of Component	*Name of Manufacturer*	*Manufacturer Serial No.*	*NB No.*	*Other No.*	*Year Built*	*Corrected, Removed, or Installed*	*ASME Code Stamped (Yes or No)*
Valve: MS-V-20	Anchor/Darling	U466	N/A	N/A	1995	Corrected	Yes
Disc	Flowserve	2	N/A	N/A	2001	Installed	Yes

7. **Description of Work:**

MS-V-20 Valve's existing Disc was replaced. The new replacement Disc and existing Disc Nut were tack welded together in two (s) places. The welding was followed by satisfactory final NDE (PT) Examination. A System Leakage Test and VT-2 Visual Examination were satisfactorily performed.

References: Weld Record No. 2-10550; Liquid Penetrant Examination Data Sheet Report No. 6-09-7-07

8. **Test Conducted:** **Hydrostatic** ☐ **Pneumatic** ☐ **Nominal Operating Pressure** ☑ **Exempt** ☐

   Other ☐ **Pressure (psi):** 920 **Test Temperature (°F):** 536

FORM NIS-2 OWNER'S REPORT FOR REPAIR/REPLACEMENT ACTIVITY

As Required by the Provisions of the ASME Code Section XI

FORM NIS-2 (Back)

9. **Remarks:**

MS-V-20 is an ASME Section III Code Class 2 valve (3" 900# Globe).

Replacement valve Disc (S/N 2) N-2 ASME Code Data Report applicable to this Repair/Replacement Activity is attached to this Form.

CERTIFICATE OF COMPLIANCE

I certify that the statements made in the report are correct and that this conforms to the requirements of the ASME Code, Section XI.

Type Code Symbol Stamp: Not Applicable
Certificate of Authorization No.: Not Applicable
Expiration Date: Not Applicable

Signed: PLE
Owner or Owner's Designee, Title

Date: 7/20/09

CERTIFICATE OF INSERVICE INSPECTION

I, Link J. Sherman, the undersigned, holding a valid commission issued by the National Board of Boiler and Pressure Vessel Inspectors and the State or Province of Washington and employed by Hartford Steam Boiler of Connecticut of Hartford, Connecticut have inspected the components described in this Owner's Report during the period 4/22/2009 to 7/23/2009, and state that to the best of my knowledge and belief, the Owner has performed examinations and taken corrective measures described in this Owner's Report in accordance with the requirements of the ASME Code, Section XI.

By signing this certificate neither the Inspector nor his employer makes any warranty, expressed or implied, concerning the examinations and corrective measures described in this Owner's Report. Furthermore, neither the Inspector nor his employer shall be liable in any manner for any personal injury or property damage or a loss of any kind arising from or connected with this inspection.

Inspector's Signature

Commissions: 13172 WAHI
National Board, State, Province, and Endorsement

Date: 7/23/2009

PLAN NO. 2-2260

Rudip Gupta 8/3/05.

FORM N-2 NPT CERTIFICATE HOLDERS' DATA REPORT FOR NUCLEAR PART AND APPURTENANCES*
As required by the Provision of the ASME Code Rules, Section III, Div. 1

1. (a) Manufactured by Flowserve Corporation, 701 First Street, Williamsport, PA 17701
(Name and address of NPT Certificate Holder)

(b) Manufactured for Energy Northwest, P.O. Box 968, Mail Drop PE55, Richland, WA 99352-0968
(Name and address of N Certificate Holder for completed nuclear component)

2. Identification-Certificate Holder's Serial No. of Part S/N's 1 and 2 Nat'l Bd. No. N/A

(a) Constructed According to Drawing No. D12090 R/B Drawing Prepared by Flowserve Corp.

(b) Description of Part Inspected Disc w/Stellite, Heat No. H4460 Material - SA105

(c) Applicable ASME Code: Section III, Edition 1971, Addenda date Wnt' 72, Case No. N/A Class 2

3. Remarks: Spare Part for 3"-900#-Globe Stop Valve
(Brief description of service for which component was designed)
Flowserve S.O. & Item No. P-057U-1

No Disc Hydrotest Performed MS-V-20, DISC S/N 2

We certify that the statements made in this report are correct and this vessel part or appurtenance as defined in the Code conforms to the rules of construction of the ASME Code Section III.
(The applicable Design Specification and Stress Report are not the responsibility of the NPT Certificate Holder for parts. An NPT Certificate Holder for appurtenances is responsible for furnishing a separate Design Specification and Stress Report if the appurtenance is not included in the component Design Specification and Stress Report.)

Date 9-13 2001 Signed Flowserve Corporation By D Rondeslager
(NPT Certificate Holder)

Certificate of Authorization Expires 4/15/04 Certificate of Authorization No. N1713

CERTIFICATION OF DESIGN FOR APPURTENANCE (when applicable)

Design information on file at

Stress analysis report on file at

Design specifications certified by Prof. Eng. State Reg. No.

Stress analysis report certified by Prof. Eng. State Reg. No.

CERTIFICATE OF SHOP INSPECTION

I, the undersigned, holding a valid commission issued by the National Board of Boiler and Pressure Vessel Inspectors and/or the State ~~or Province of~~ Pennsylvania and employed by Commercial Union Insurance Company of Boston, Mass. have inspected the part of a pressure vessel described in this Partial Data Report on 9-13-01 19__, and state that to the best of my knowledge and belief, the NPT Certificate Holder has constructed this part in accordance with the ASME Code Section III.

By signing this certificate, neither the inspector nor his employer makes any warranty, expressed or implied, concerning the part described in this Partial Data Report. Furthermore, neither the inspector nor his employer shall be liable in any manner for any personal injury or property damage or a loss of any kind arising from or connected with this inspection.

Date 9-13-01 19__

William Wilke Commissions Pennsylvania 1722
Inspector's Signature National Board, State, Province and No.

* Supplemental sheets in form of lists, sketches or drawings may be used provided (1) size is 8½" x 11", (2) information in items 1-3 on this Data Report is included on each sheet, and (3) each sheet is numbered and number of sheets is recorded in item 3, "Remarks".

(10/77) This form (E00040) may be obtained from the Order Dept., ASME, 345 E. 47th St., New York, N.Y. 10017

SATISFACTORY ✓ UNSATISFACTORY ___
Vijay Patel I 10/01/01
RECEIPT INSPECTOR / LEVEL / DATE

0286200284

PLAN No 2-2261

ENERGY NORTHWEST
People · Vision · Solutions

FORM NIS-2 OWNER'S REPORT FOR REPAIR/REPLACEMENT ACTIVITY
As Required By The Provisions Of The ASME Code Section XI

Date: 07/14/2009
Sheet: 1 Of 1
Unit: Not Applicable

1. Owner: Energy Northwest
Address: Columbia Generating Station, North Power Plant Loop, Richland, Washington, 99352
2. Plant: Columbia Generating Station
Address: Columbia Generating Station, North Power Plant Loop, Richland, Washington, 99352
3. (a) Work Performed By: Energy Northwest
(b) Repair/Replacement Organization P.O. No, Job No, etc.: Energy Northwest
(c) Type Code Symbol Stamp: Not Applicable
(d) Certificate Of Authorization No.: Not Applicable
(e) Expiration Date: Not Applicable
4. Identification Of System: Reactor Feedwater (RFW) System
5. (a) Applicable Construction Code: ASME Section III, Code Class 1, 1971 Edition with Winter 1972 Addenda, Code Case: Note 1
(b) Applicable Edition Of ASME Section XI Used For Repair/Replacement Activity: 2001 Edition with 2003 Addenda
(c) Applicable ASME Section XI Case(s): None
6. Identification Of Components

Name Of Component	Name Of Manufacturer	Manufacturer's Serial No	National Board No	Other I.D.	Year Built	Corrected, Removed Or Installed	ASME Code Stamped (Yes Or No) Code Class
RFW-V-32A	Anchor Darling	1N109	N/A	N/A	1975	See Item 7 Below	Yes, Code Class 1

7. Description Of Work Performed: Installed modification kit (hinge cover kit) for valve RFW-V-32A. The replacement work was performed as follows:

1) Remove existing hard ware from the valve hinge.
2) Performed VT-1 visual examination on replacement studs to satisfy ISI (PSI) requirements. VT-1 visual examination results acceptable.
3) Performed VT-1 visual examination on replacement nuts to satisfy ISI (PSI) requirements. VT-1 visual examination results acceptable.
4) Installed replacement hinge pin cover on the valve.
5) Installed VT-1 visually examined replacement studs.
6) Installed VT-1 visually examined replacement nuts.
7) Performed VT-2 visual examination during pressure test to confirm pressure boundary integrity of the joint. No evidence of leakage during the pressure test.

NOTES -

1) The applicable ASME Code Cases, if any are listed on the ASME Code Data Reports.

PLAN No 2-2261

ENERGY NORTHWEST
People · Vision · Solutions

FORM NIS-2 OWNER'S REPORT FOR REPAIR/REPLACEMENT ACTIVITY (Back)

8 Tests Conducted: Hydrostatic [ ] **Pneumatic** [ ] **Nominal Operating Pressure** [ ] **Other** [ ]
Exempt [ ] **Test Pressure:** 1020 Psig **Test Temperature:** 165° F

9. Remarks (Applicable Manufacturer's Data Reports to be attached): 1) * The test pressure and the test temperature on the hinge pin cover bolted joint was recorded during ASME Section XI pressure test which was performed in accordance with PPM No OSP-RPV-R801 "Reactor Pressure Vessel Leakage Test".

CERTIFICATE OF COMPLIANCE

I certify that the statements made in this Owner's Report are correct and that this conforms to the requirements of the ASME Code, Section XI.
Type Code Symbol Stamp: Not Applicable
Certificate Of Authorization No.: Not Applicable
Expiration Date: Not Applicable

Prepared By Kuldip Singh - Program Lead Engineer (PLE) ***Signed By*** Kuldip Singh - Program Lead Engineer (PLE)

Date 7/14/09 ***Date*** 7/14/09

CERTIFICATE OF INSERVICE INSPECTION

I, the undersigned, holding a valid commission issued by the National Board of Boiler and Pressure Vessel Inspectors and the State of Washington ***and employed by*** Hartford Steam Boiler Of Connecticut of Hartford, Connecticut ***have inspected the components described in this Owner's Report during the period*** 4/24/2009 ***to*** 7/22/2009 ***and state to the best of my knowledge and belief, the Owner has performed examinations and taken corrective measures described in this Owner's Report in accordance with the requirements of the ASME Code, Section XI.***
By signing this certificate neither the Inspector nor his employer makes any warranty, expressed or implied, concerning the examinations and corrective measures described in this Owner's Report. Furthermore, neither the Inspector nor his employer shall be liable in any manner for any personal injury or property damage or a loss of any kind arising from or connected with this inspection.

Inspector's Signature ***Commissions*** 13172 WANI
National Board, State, and Endorsements

Date 7/22/2009

FORM NIS-2 OWNER'S REPORT FOR REPAIR/REPLACEMENT ACTIVITY

As Required by the Provisions of the ASME Code Section XI

1. **Owner:** Energy Northwest
   Address P.O. Box 968
   Richland, WA 99352

   Date: 6/17/09

   Sheet: 1 of 1

2. **Plant:** Columbia Generating Station
   Address 76 North Power Plant Loop
   Richland, WA 99354

   Unit: 2

   Repair/Replacement Organization Work Order No. 01153014
   Work Plan No. 2-2262

3. **Work Performed by:** Energy Northwest
   Address: 76 North Power Plant Loop
   Richland, WA 99354

   Type Code Symbol Stamp: Not Applicable
   Authorization No. Not Applicable
   Expiration Date: Not Applicable

4. **Identification of System:** Instrument Air

5. (a) **Applicable Construction Code:** ASME Section III **Edition:** 1974 **Addenda:** W75 **Code Case:** See Data Report
   (b) **Applicable Edition of Section XI Used for Repair/Replacement Activity:** 2001 **Addenda:** 2003
   (c) **Applicable Section XI Code Case(s):** N/A

6. **Identification of Components:**

Name of Component	*Name of Manufacturer*	*Manufacturer Serial No.*	*NB No.*	*Other No.*	*Year Built*	*Corrected, Removed, or Installed*	*ASME Code Stamped (Yes or No)*
IR-64-4 Air Line	Johnson Controls	PI(1)-ST-(IR-64)-4	N/A	N/A	1983	Corrected	Yes
Tubing Cap	Swagelok	R15AF0513B	N/A	N/A	1995	Installed	No

7. **Description of Work:**

Instrument Air Tubing Line IR-64-4 leading to RFW-V-32A was cut and mechanically capped in accordance with EC-MPDC No. 3016. The 3/8" Instrument Air Tubing Line is an ASME Code Class 2 system.

8. **Test Conducted:** **Hydrostatic** ☐ **Pneumatic** ☐ **Nominal Operating Pressure** ☐ **Exempt** ☑

   Other ☐ **Pressure (psi):** N/A **Test Temperature (°F):** N/A

FORM NIS-2 OWNER'S REPORT FOR REPAIR/REPLACEMENT ACTIVITY

As Required by the Provisions of the ASME Code Section XI

FORM NIS-2 (Back)

9. Remarks:

No ANII involvement was required (NPS 1 and under) in accordance with IWA-4130.

CERTIFICATE OF COMPLIANCE

I certify that the statements made in the report are correct and that this conforms to the requirements of the ASME Code, Section XI.

Type Code Symbol Stamp: Not Applicable

Certificate of Authorization No.: Not Applicable

Expiration Date: Not Applicable

Signed: _____ **Date:** 6/17/09

Owner or Owner's Designee, Title

CERTIFICATE OF INSERVICE INSPECTION

I, _____, the undersigned, holding a valid commission issued by the National Board of Boiler and Pressure Vessel Inspectors and the State or Province of _____ and employed by _____ have inspected the components described in this Owner's Report during the period _____ to _____, and state that to the best of my knowledge and belief, the Owner has performed examinations and taken corrective measures described in this Owner's Report in accordance with the requirements of the ASME Code, Section XI.

By signing this certificate neither the inspector nor his employer makes any warranty, expressed or implied, concerning the examinations and corrective measures described in this Owner's Report. Furthermore, neither the inspector nor his employer shall be liable in any manner for any personal injury or property damage or a loss of any kind arising from or connected with this inspection.

Not Required **Commissions:** _____

Inspector's Signature National Board, State, Province, and Endorsements

Date: _____

PLAN No 2-2263

ENERGY NORTHWEST
People · Vision · Solutions

FORM NIS-2 OWNER'S REPORT FOR REPAIR/REPLACEMENT ACTIVITY
As Required By The Provisions Of The ASME Code Section XI

1. Owner: Energy Northwest
Address: Columbia Generating Station, North Power Plant Loop, Richland, Washington, 99352
2. Plant: Columbia Generating Station
Address: Columbia Generating Station, North Power Plant Loop, Richland, Washington, 99352

Date: 07/14/2009
Sheet: 1 Of 1
Unit: Not Applicable

3. (a) Work Performed By: Energy Northwest
(b) Repair/Replacement Organization P.O. No, Job No, etc.: Energy Northwest
(c) Type Code Symbol Stamp: Not Applicable
(d) Certificate Of Authorization No.: Not Applicable
(e) Expiration Date: Not Applicable
4. Identification Of System: Reactor Feedwater (RFW) System
5. (a) Applicable Construction Code: ASME Section III, Code Class 1, 1971 Edition with Winter 1972 Addenda, Code Case: Note 1
(b) Applicable Edition Of ASME Section XI Used For Repair/Replacement Activity: 2001 Edition with 2003 Addenda
(c) Applicable ASME Section XI Case(s): None
6. Identification Of Components

Name Of Component	Name Of Manufacturer	Manufacturer's Serial No	National Board No	Other I.D.	Year Built	Corrected, Removed Or Installed	ASME Code Stamped (Yes Or No) Code Class
RFW-V-32B	Anchor Darling	1N110	N/A	N/A	1975	See Item 7 Below	Yes, Code Class 1

7. Description Of Work Performed: Installed modification kit (hinge cover kit) for valve RFW-V-32B. The replacement work was performed as follows:

1) Remove existing hard ware from the valve.
2) Performed VT-1 visual examination on replacement studs to satisfy ISI (PSI) requirements. VT-1 visual examination results acceptable.
3) Performed VT-1 visual examination on replacement nuts to satisfy ISI (PSI) requirements. VT-1 visual examination results acceptable.
4) Performed VT-3 visual examination on the valve accessible internal surfaces to satisfy ISI (PSI) requirements. VT-3 visual examination results acceptable.
5) Installed replacement hinge pin cover on the valve.
6) Installed VT-1 visually examined replacement studs.
7) Installed VT-1 visually examined replacement nuts.
8) Performed VT-2 visual examination during pressure test to confirm pressure boundary integrity of the joint. No evidence of leakage during the pressure test.

NOTES -

1) The applicable ASME Code Cases, if any are listed on the ASME Code Data Reports.

PLAN No 2-2263

ENERGY NORTHWEST
People · Vision · Solutions

FORM NIS-2 OWNER'S REPORT FOR REPAIR/REPLACEMENT ACTIVITY (Back)

8 Tests Conducted: Hydrostatic [ ] **Pneumatic** [ ] **Nominal Operating Pressure** [ ] **Other** [*]
Exempt [ ] **Test Pressure:** 1020 Psig **Test Temperature:** 165° F

9. Remarks (Applicable Manufacturer's Data Reports to be attached): 1) * The test pressure and the test temperature on the hinge pin cover bolted joint was recorded during ASME Section XI pressure test which was performed in accordance with PPM No OSP-RPV-R801 "Reactor Pressure Vessel Leakage Test".

CERTIFICATE OF COMPLIANCE

I certify that the statements made in this Owner's Report are correct and that this conforms to the requirements of the ASME Code, Section XI.
Type Code Symbol Stamp: Not Applicable
Certificate Of Authorization No.: Not Applicable
Expiration Date: Not Applicable

Prepared By Kuldip Singh - Program Lead Engineer (PLE) ***Signed By*** Kuldip Singh - Program Lead Engineer (PLE)

Date 7/22/09 ***Date*** 7/22/09

CERTIFICATE OF INSERVICE INSPECTION

I, the undersigned, holding a valid commission issued by the National Board of Boiler and Pressure Vessel Inspectors and the State of Washington ***and employed by*** Hartford Steam Boiler Of Connecticut of Hartford, Connecticut ***have inspected the components described in this Owner's Report during the period*** 5-4-2009 ***to*** 7-30-2009 ***and state to the best of my knowledge and belief, the Owner has performed examinations and taken corrective measures described in this Owner's Report in accordance with the requirements of the ASME Code, Section XI.***
By signing this certificate neither the Inspector nor his employer makes any warranty, expressed or implied, concerning the examinations and corrective measures described in this Owner's Report. Furthermore, neither the Inspector nor his employer shall be liable in any manner for any personal injury or property damage or a loss of any kind arising from or connected with this inspection.

Frank A. Allgaier — Inspector's Signature ***Commissions*** 13324 WANI — National Board, State, and Endorsements

Date 7-30-2009

FORM NIS-2 OWNER'S REPORT FOR REPAIR/REPLACEMENT ACTIVITY

As Required by the Provisions of the ASME Code Section XI

1. **Owner:** Energy Northwest
   Address P.O. Box 968
   Richland, WA 99352

   Date: 6/22/09

   Sheet: 1 of 1

2. **Plant:** Columbia Generating Station
   Address 76 North Power Plant Loop
   Richland, WA 99354

   Unit: 2

   Repair/Replacement Organization Work Order No. 01153016
   Work Plan No. 2-2264

3. **Work Performed by:** Energy Northwest
   Address: 76 North Power Plant Loop
   Richland, WA 99354

   Type Code Symbol Stamp: Not Applicable
   Authorization No. Not Applicable
   Expiration Date: Not Applicable

4. **Identification of System:** Instrument Air

5. (a) **Applicable Construction Code:** ASME Section III **Edition:** 1974 **Addenda:** W75 **Code Case:** See Data Report
   (b) **Applicable Edition of Section XI Used for Repair/Replacement Activity:** 2001 **Addenda:** 2003
   (c) **Applicable Section XI Code Case(s):** N/A

6. **Identification of Components:**

Name of Component	*Name of Manufacturer*	*Manufacturer Serial No.*	*NB No.*	*Other No.*	*Year Built*	*Corrected, Removed, or Installed*	*ASME Code Stamped (Yes or No)*
IR-64-5 Air Line	Johnson Controls	PI(1)-ST-(IR-64)-5	N/A	N/A	1983	Corrected	Yes
Tubing Cap	Swagelok	B/C: R15AF0513B	N/A	SS-600-C	1995	Installed	No

7. **Description of Work:**

Instrument Air Tubing Line IR-64-5 leading to RFW-V-32B was cut and mechanically capped in accordance with EC-MPDC No. 3016. The 3/8" Instrument Air Tubing Line is an ASME Code Class 2 system.

8. **Test Conducted:** **Hydrostatic** ☐ **Pneumatic** ☐ **Nominal Operating Pressure** ☐ **Exempt** ☑

   Other ☐ **Pressure (psi):** N/A **Test Temperature (°F):** N/A

FORM NIS-2 OWNER'S REPORT FOR REPAIR/REPLACEMENT ACTIVITY

As Required by the Provisions of the ASME Code Section XI

FORM NIS-2 (Back)

9. **Remarks:**

No ANII involvement was required (NPS 1 and under) in accordance with IWA-4130.

CERTIFICATE OF COMPLIANCE

I certify that the statements made in the report are correct and that this conforms to the requirements of the ASME Code, Section XI.

Type Code Symbol Stamp: Not Applicable

Certificate of Authorization No.: Not Applicable

Expiration Date: Not Applicable

Signed: PLE

Owner or Owner's Designee, Title

Date: 6/22/09

CERTIFICATE OF INSERVICE INSPECTION

I, _____, the undersigned, holding a valid commission issued by the National Board of Boiler and Pressure Vessel Inspectors and the State or Province of _____ and employed by _____ have inspected the components described in this Owner's Report during the period _____ to _____, and state that to the best of my knowledge and belief, the Owner has performed examinations and taken corrective measures described in this Owner's Report in accordance with the requirements of the ASME Code, Section XI.

By signing this certificate neither the Inspector nor his employer makes any warranty, expressed or implied, concerning the examinations and corrective measures described in this Owner's Report. Furthermore, neither the Inspector nor his employer shall be liable in any manner for any personal injury or property damage or a loss of any kind arising from or connected with this inspection.

Not Required

Inspector's Signature

Commissions: _____

National Board, State, Province, and Endorsements

Date: _____

PLAN No 2-2270

ENERGY NORTHWEST
People·Vision·Solutions

FORM NIS-2 OWNER'S REPORT FOR REPAIR/REPLACEMENT ACTIVITY
As Required By The Provisions Of The ASME Code Section XI

Date: 07/29/2009
Sheet: 1 Of 1
Unit: Not Applicable

1. Owner: Energy Northwest
Address: Columbia Generating Station, North Power Plant Loop, Richland, Washington, 99352
2. Plant: Columbia Generating Station
Address: Columbia Generating Station, North Power Plant Loop, Richland, Washington, 99352
3. (a) Work Performed By: NWS Technologies, LLC, 131 Venture Boulevard, Spartanburg, SC 29306
(b) Repair/Replacement Organization P.O. No, Job No, etc.: PO No 326692
(c) Type Code Symbol Stamp: NWS Technologies, LLC, VR And NR
(d) Certificate Of Authorization No.: NWS Technologies, LLC, VR No 632 And NR No 81
(e) Expiration Date: NWS Technologies, LLC, VR - April 03, 2009 And NR - April 09, 2009
4. Identification Of System: Main Steam (MS) System
5. (a) Applicable Construction Code: ASME Section III, Code Class 1, 1971 Edition with no Addenda, Code Case: See Note 1
(b) Applicable Edition Of ASME Section XI Used For Repair/Replacement Activity: 2001 Edition with 2003 Addenda
(c) Applicable ASME Section XI Case(s): None
6. Identification Of Components

Name Of Component	Name Of Manufacturer	Manufacturer's Serial No	National Board No	Other I.D.	Year Built	Corrected, Removed Or Installed	ASME Code Stamped (Yes Or No) Code Class
MS-RV-1C	Crosby	N63790-03-0046 (N63790-00-0046)	N/A	N/A	1981	See Item 7 Below	Yes, Code Class 1

7. Description Of Work Performed: Performed work on Spare Main Steam Relief Valve (MSRV) MS-RV-1C, Serial No N63790-03-0046. The work was performed as follows:

1) Installed one (1) Heli-Coil insert in outlet hole location # 16.

NOTES -

1 The applicable ASME Code Cases, if any are listed on the ASME Code Data Reports.

PLAN No 2-2270

ENERGY NORTHWEST
People·Vision·Solutions

FORM NIS-2 OWNER'S REPORT FOR REPAIR/REPLACEMENT ACTIVITY (Back)

8 Tests Conducted: Hydrostatic [ ] **Pneumatic** [X] **Nominal Operating Pressure** [ ] **Other** [ ]
Exempt [X] **Test Pressure:** Psig **Test Temperature:** °F

9. Remarks (Applicable Manufacturer's Data Reports to be attached): None

CERTIFICATE OF COMPLIANCE

I certify that the statements made in this Owner's Report are correct and that this conforms to the requirements of the ASME Code, Section XI.
Type Code Symbol Stamp: Not Applicable
Certificate Of Authorization No.: Not Applicable
Expiration Date: Not Applicable

Prepared By Kuldip Singh - Program Lead Engineer (PLE) ***Signed By*** Kuldip Singh - Program Lead Engineer (PLE)

Date 7/29/09 ***Date*** 7/29/09

CERTIFICATE OF INSERVICE INSPECTION

I, the undersigned, holding a valid commission issued by the National Board of Boiler and Pressure Vessel Inspectors and the State of Washington ***and employed by*** Hartford Steam Boiler Of Connecticut of Hartford, Connecticut ***have inspected the components described in this Owner's Report during the period*** 5-4-09 ***to*** 8-11-09 ***and state to the best of my knowledge and belief, the Owner has performed examinations and taken corrective measures described in this Owner's Report in accordance with the requirements of the ASME Code, Section XI.***
By signing this certificate neither the Inspector nor his employer makes any warranty, expressed or implied, concerning the examinations and corrective measures described in this Owner's Report. Furthermore, neither the Inspector nor his employer shall be liable in any manner for any personal injury or property damage or a loss of any kind arising from or connected with this inspection.

Fred A Allgaier — Inspector's Signature ***Commissions*** 13324 W ANI — National Board, State, and Endorsements

Date 8-11-09

PLAN No 2-2271

ENERGY NORTHWEST
People · Vision · Solutions

FORM NIS-2 OWNER'S REPORT FOR REPAIR/REPLACEMENT ACTIVITY
As Required By The Provisions Of The ASME Code Section XI

1. Owner: Energy Northwest
Address: Columbia Generating Station, North Power Plant Loop, Richland, Washington, 99352
2. Plant: Columbia Generating Station
Address: Columbia Generating Station, North Power Plant Loop, Richland, Washington, 99352

Date: 06/21/2009
Sheet: 1 Of 1
Unit: Not Applicable

3. (a) Work Performed By: Energy Northwest
(b) Repair/Replacement Organization P.O. No, Job No, etc.: Energy Northwest
(c) Type Code Symbol Stamp: Not Applicable
(d) Certificate Of Authorization No.: Not Applicable
(e) Expiration Date: Not Applicable
4. Identification Of System: Residual Heat Removal (RHR) System
5. (a) Applicable Construction Code: ASME Section III, Code Class 1, 1971 Edition with Winter 1972 Addenda, Code Case: Note 1
(b) Applicable Edition Of ASME Section XI Used For Repair/Replacement Activity: 2001 Edition with 2003 Addenda
(c) Applicable ASME Section XI Case(s): None
6. Identification Of Components

Name Of Component	Name Of Manufacturer	Manufacturer's Serial No	National Board No	Other I.D.	Year Built	Corrected, Removed Or Installed	ASME Code Stamped (Yes Or No) Code Class
RHR-V-50A	Velan	0415	N/A	N/A	1977	Corrected (Repaired)	Yes, Code Class 1

7. Description Of Work Performed: Performed repair work on existing valve RHR-V-50A, Serial No 0415. The repair work was performed as follows:

1) Machined/ground bonnet Hole No 5.
2) See Note 2 below for additional information.

NOTES -

1) The applicable ASME Code Cases, if any are listed on the ASME Code Data Reports.
2) The remaining work such as VT-1 visual examination on the valve body to bonnet replacement fasteners for ISI (PSI), VT-3 visual examination on the internal valve body and bonnet surfaces for ISI (PS), replacement of valve body to bonnet fasteners and VT-2 visual examination during pressure test on the existing valve RHR-V-50A, Serial No 0415 was performed in accordance with ASME Section XI Plan No 2-2246.

PLAN No 2-2271

ENERGY NORTHWEST
People · Vision · Solutions

FORM NIS-2 OWNER'S REPORT FOR REPAIR/REPLACEMENT ACTIVITY (Back)

8 Tests Conducted: Hydrostatic [ ] **Pneumatic** [ ] **Nominal Operating Pressure** [ ] **Other** [ ]
Exempt [ ] **Test Pressure:** 1020 Psig **Test Temperature:** 165° F

9. Remarks (Applicable Manufacturer's Data Reports to be attached): 1) * The VT-2 visual examination on the valve body to bonnet joint performed during ASME Section XI pressure test in accordance with PPM No OSP-RPV-R801 "Reactor Pressure Vessel Leakage Test" is documented in ASME Section XI Plan No 2-2246.

CERTIFICATE OF COMPLIANCE

I certify that the statements made in this Owner's Report are correct and that this conforms to the requirements of the ASME Code, Section XI.
Type Code Symbol Stamp: Not Applicable
Certificate Of Authorization No.: Not Applicable
Expiration Date: Not Applicable

Prepared By Kuldip Singh - Program Lead Engineer (PLE) ***Signed By*** Kuldip Singh - Program Lead Engineer (PLE)

Date 6/21/09 ***Date*** 6/21/09

CERTIFICATE OF INSERVICE INSPECTION

I, the undersigned, holding a valid commission issued by the National Board of Boiler and Pressure Vessel Inspectors and the State of Washington ***and employed by*** Hartford Steam Boiler Of Connecticut of Hartford, Connecticut ***have inspected the components described in this Owner's Report during the period*** 5/24/2009 ***to*** 6/25/2009 ***and state to the best of my knowledge and belief, the Owner has performed examinations and taken corrective measures described in this Owner's Report in accordance with the requirements of the ASME Code, Section XI.***
By signing this certificate neither the Inspector nor his employer makes any warranty, expressed or implied, concerning the examinations and corrective measures described in this Owner's Report. Furthermore, neither the Inspector nor his employer shall be liable in any manner for any personal injury or property damage or a loss of any kind arising from or connected with this inspection.

Inspector's Signature ***Commissions*** 13172 WANI
National Board, State, and Endorsements

Date 6/25/2009

FORM NIS-2 OWNER'S REPORT FOR REPAIR/REPLACEMENT ACTIVITY

As Required by the Provisions of the ASME Code Section XI

1. **Owner:** Energy Northwest
   Address P.O. Box 968
   Richland, WA 99352

   Date: 6/23/09

   Sheet: 1 of 1

2. **Plant:** Columbia Generating Station
   Address 76 North Power Plant Loop
   Richland, WA 99354

   Unit: 2

   Repair/Replacement Organization Work Order No. 01171997
   Work Plan No. 2-2272

3. **Work Performed by:** Energy Northwest
   Address: 76 North Power Plant Loop
   Richland, WA 99354

   Type Code Symbol Stamp: Not Applicable
   Authorization No. Not Applicable
   Expiration Date: Not Applicable

4. **Identification of System:** Main Steam Instrument Line

5. (a) **Applicable Construction Code:** ASME Section III **Edition:** 1974 **Addenda:** W75 **Code Case:** See Data Report

   (b) **Applicable Edition of Section XI Used for Repair/Replacement Activity:** 2001 **Addenda:** 2003

   (c) **Applicable Section XI Code Case(s):** N/A

6. **Identification of Components:**

Name of Component	*Name of Manufacturer*	*Manufacturer Serial No.*	*NB No.*	*Other No.*	*Year Built*	*Corrected, Removed, or Installed*	*ASME Code Stamped (Yes or No)*
PI(1)-4S-X72a Flange	Johnson Controls	Piping: PI(1)-4S-X-72a	N/A	N/A	1983	Corrected	Yes

7. **Description of Work:**

Main Steam Instrument Piping Line PI(1)-4S-X72a Flange, located downstream of MS-CU-2 Condensing Chamber, had all four existing 3/4" Studs and all eight existing 3/4" Nuts mechanically replaced. The replacement bolting materials are ASME Code Class 1. The 3/4" Main Steam Instrument Air Piping Line is an ASME Code Class 1 system.

8. **Test Conducted:** **Hydrostatic** ☐ **Pneumatic** ☐ **Nominal Operating Pressure** ☐ **Exempt** ☑

   Other ☐ **Pressure (psi):** N/A **Test Temperature (°F):** N/A

FORM NIS-2 OWNER'S REPORT FOR REPAIR/REPLACEMENT ACTIVITY

As Required by the Provisions of the ASME Code Section XI

FORM NIS-2 (Back)

9. **Remarks:**

No ANII involvement was required (NPS 1 and under) in accordance with IWA-4130.

CERTIFICATE OF COMPLIANCE

I certify that the statements made in the report are correct and that this conforms to the requirements of the ASME Code, Section XI.

Type Code Symbol Stamp: Not Applicable

Certificate of Authorization No.: Not Applicable

Expiration Date: Not Applicable

Signed: _____ PLE

Owner or Owner's Designee, Title

Date: 6/23/09

CERTIFICATE OF INSERVICE INSPECTION

I, _____, the undersigned, holding a valid commission issued by the National Board of Boiler and Pressure Vessel Inspectors and the State or Province of _____ and employed by _____ have inspected the components described in this Owner's Report during the period _____ to _____, and state that to the best of my knowledge and belief, the Owner has performed examinations and taken corrective measures described in this Owner's Report in accordance with the requirements of the ASME Code, Section XI.

By signing this certificate neither the Inspector nor his employer makes any warranty, expressed or implied, concerning the examinations and corrective measures described in this Owner's Report. Furthermore, neither the Inspector nor his employer shall be liable in any manner for any personal injury or property damage or a loss of any kind arising from or connected with this inspection.

Not Required

Inspector's Signature

Commissions: _____

National Board, State, Province, and Endorsements

Date: _____

FORM NIS-2 OWNER'S REPORT FOR REPAIR/REPLACEMENT ACTIVITY

As Required by the Provisions of the ASME Code Section XI

1. **Owner:** Energy Northwest
   Address P.O. Box 968
   Richland, WA 99352

   Date: 6/29/09

   Sheet: 1 of 1

2. **Plant:** Columbia Generating Station
   Address 76 North Power Plant Loop
   Richland, WA 99354

   Unit: 2

   Repair/Replacement Organization Work Order No. 01172197
   Work Plan No. 2-2273

3. **Work Performed by:** Energy Northwest
   Address: 76 North Power Plant Loop
   Richland, WA 99354

   Type Code Symbol Stamp: Not Applicable
   Authorization No. Not Applicable
   Expiration Date: Not Applicable

4. **Identification of System:** Containment Instrument Air (CIA)

5. (a) **Applicable Construction Code:** ASME Section III **Edition:** 1971 **Addenda:** W73 **Code Case:** See Data Report

   (b) **Applicable Edition of Section XI Used for Repair/Replacement Activity:** 2001 **Addenda:** 2003

   (c) **Applicable Section XI Code Case(s):** N/A

6. **Identification of Components:**

Name of Component	*Name of Manufacturer*	*Manufacturer Serial No.*	*NB No.*	*Other No.*	*Year Built*	*Corrected, Removed, or Installed*	*ASME Code Stamped (Yes or No)*
CIA-FLX-1V	Metal Bellows Corp.	018	N/A	N/A	1981	Corrected	Yes

7. **Description of Work:**

CIA-FLX-1V is an ASME Section III Code Class 2 flexible piping subassembly located in Piping System CIA(3)-2-P1. One new lower flange Stud and two new Nuts were mechanically replaced.

The CIA-FLX-1V lower piping flange was Pressure Tested and a VT-2 Visual Examination was successfully performed following the Repair/Replacement Activity.

8. **Test Conducted:** **Hydrostatic** ☐ **Pneumatic** ☐ **Nominal Operating Pressure** ☑ **Exempt** ☐

   Other ☐ **Pressure (psi):** 184 **Test Temperature (°F):** 98

FORM NIS-2 OWNER'S REPORT FOR REPAIR/REPLACEMENT ACTIVITY

As Required by the Provisions of the ASME Code Section XI

FORM NIS-2 (Back)

9. **Remarks:**

The replacement Stud material is SA-193 Grade B7. The replacement Nut material is SA-194 Grade 2H. The replacement bolting materials meet the Owner's Requirements and ASME Section XI.

Piping System CIA(3)-2-P1 installed/manufactured by Bechtel is an ASME Section III Code Class 2 system (1971 Edition with Winter 1973 Addenda, installed/manufactured in 1983).

CERTIFICATE OF COMPLIANCE

I certify that the statements made in the report are correct and that this conforms to the requirements of the ASME Code, Section XI.

Type Code Symbol Stamp: Not Applicable
Certificate of Authorization No.: Not Applicable
Expiration Date: Not Applicable

Signed: PLE
Owner or Owner's Designee, Title

Date: 6/29/09

CERTIFICATE OF INSERVICE INSPECTION

I, Link J. Sherman, the undersigned, holding a valid commission issued by the National Board of Boiler and Pressure Vessel Inspectors and the State or Province of Washington and employed by Hartford Steam Boiler of Connecticut of Hartford, Connecticut have inspected the components described in this Owner's Report during the period 6/9/2009 to 7/14/2009, and state that to the best of my knowledge and belief, the Owner has performed examinations and taken corrective measures described in this Owner's Report in accordance with the requirements of the ASME Code, Section XI.

By signing this certificate neither the Inspector nor his employer makes any warranty, expressed or implied, concerning the examinations and corrective measures described in this Owner's Report. Furthermore, neither the Inspector nor his employer shall be liable in any manner for any personal injury or property damage or a loss of any kind arising from or connected with this inspection.

Inspector's Signature

Commissions: 13172 WANI
National Board, State, Province, and Endorsement

Date: 7/14/2009

PLAN No 2-2274

ENERGY NORTHWEST
People · Vision · Solutions

FORM NIS-2 OWNER'S REPORT FOR REPAIR/REPLACEMENT ACTIVITY
As Required By The Provisions Of The ASME Code Section XI

Date: 08/10/2009
Sheet: 1 Of 1
Unit: Not Applicable

1. **Owner:** Energy Northwest
   Address: Columbia Generating Station, North Power Plant Loop, Richland, Washington, 99352
2. **Plant:** Columbia Generating Station
   Address: Columbia Generating Station, North Power Plant Loop, Richland, Washington, 99352
3. (a) **Work Performed By:** Energy Northwest
   (b) **Repair/Replacement Organization P.O. No, Job No, etc.:** Energy Northwest
   (c) **Type Code Symbol Stamp:** Not Applicable
   (d) **Certificate Of Authorization No.:** Not Applicable
   (e) **Expiration Date:** Not Applicable
4. **Identification Of System:** Reactor Recirculation Cooling (RRC) System
5. (a) **Applicable Construction Code:** ASME Section III, Code Class 1, 1971 Edition with no Addenda, Code Case: Note 1
   (b) **Applicable Edition Of ASME Section XI Used For Repair/Replacement Activity:** 2001 Edition with 2003 Addenda
   (c) **Applicable ASME Section XI Code Case(s):** None
6. **Identification Of Components**

Name Of Component	Name Of Manufacturer	Manufacturer's Serial No	National Board No	Other I.D.	Year Built	Corrected, Removed Or Installed	ASME Code Stamped (Yes Or No) Code Class
RRC-V-23A	Atwood Morrill	1-336	N/A	N/A	1974	See Item 7 Below	Yes, Code Class 1

7. **Description Of Work:** Removed existing valve leak off connection from valve RRC-V-23A. The work was performed as follows:
   1) Machined replacement pipe plug.
   2) Performed liquid penetrant (PT) examination on the final machined surfaces. Liquid penetrant (PT) examination results acceptable.
   3) Removed existing valve leak off connection.
   4) Prepped cut/ground pipe boss surfaces.
   5) Performed liquid penetrant (PT) examination on the final pipe boss prepped surfaces. Liquid penetrant (PT) examination results acceptable.
   6) Installed replacement pipe plug.
   7) Made required weld.
   8) Performed visual examination on the final weld. Visual examination results acceptable.
   9) Performed liquid penetrant (PT) examination on the final weld. Liquid penetrant (PT) examination results acceptable.

NOTES

1) The applicable ASME Code Cases, if any are listed on the ASME Code Data Reports.

PLAN No 2-2274

ENERGY NORTHWEST
People · Vision · Solutions

FORM NIS-2 OWNER'S REPORT FOR REPAIR/REPLACEMENT ACTIVITY (Back)

8 Tests Conducted: Hydrostatic [ ] **Pneumatic** [ ] **Nominal Operating Pressure** [ ] **Other** [ ]
Exempt [X] **Test Pressure:** Psig **Test Temperature:** °F

9. Remarks (Applicable Manufacturer's Data Reports to be attached): None

CERTIFICATE OF COMPLIANCE

I certify that the statements made in this Owner's Report are correct and that this conforms to the requirements of the ASME Code, Section XI.
Type Code Symbol Stamp: Not Applicable
Certificate Of Authorization No.: Not Applicable
Expiration Date: Not Applicable

Prepared By Kuldip Singh **Signed By** Kuldip Singh
Kuldip Singh - Program Lead Engineer (PLE) Kuldip Singh - Program Lead Engineer (PLE)
Date 8/10/09 **Date** 8/10/09

CERTIFICATE OF INSERVICE INSPECTION

I, the undersigned, holding a valid commission issued by the National Board of Boiler and Pressure Vessel Inspectors and the State of _____ and employed by _____ of _____ have inspected the components described in this Owner's Report during the period _____ to _____ and state to the best of my knowledge and belief, the Owner has performed examinations and taken corrective measures described in this Owner's Report in accordance with the requirements of the ASME Code, Section XI.
By signing this certificate neither the Inspector nor his employer makes any warranty, expressed or implied, concerning the examinations and corrective measures described in this Owner's Report. Furthermore, neither the Inspector nor his employer shall be liable in any manner for any personal injury or property damage or a loss of any kind arising from or connected with this inspection.

N/R - Repair/Replacement 1" NPS And Smaller (Small Items) **Commissions** _____
Inspector's Signature National Board, State, and Endorsements
Date _____

PLAN No 2-2275

ENERGY NORTHWEST
People · Vision · Solutions

FORM NIS-2 OWNER'S REPORT FOR REPAIR/REPLACEMENT ACTIVITY
As Required By The Provisions Of The ASME Code Section XI

1. Owner: Energy Northwest
Address: Columbia Generating Station, North Power Plant Loop, Richland, Washington, 99352
2. Plant: Columbia Generating Station
Address: Columbia Generating Station, North Power Plant Loop, Richland, Washington, 99352

Date: 07/16/2009
Sheet: 1 Of 1
Unit: Not Applicable

3. (a) Work Performed By: Energy Northwest
(b) Repair/Replacement Organization P.O. No, Job No, etc.: Energy Northwest
(c) Type Code Symbol Stamp: Not Applicable
(d) Certificate Of Authorization No.: Not Applicable
(e) Expiration Date: Not Applicable
4. Identification Of System: Process Instrument (PI) System
5. (a) Applicable Construction Code: ASME Section III, Code Class 2, 1974 Edition with Winter 1975 Addenda, Code Case: Note 1
(b) Applicable Edition Of ASME Section XI Used For Repair/Replacement Activity: 2001 Edition with 2003 Addenda
(c) Applicable ASME Section XI Code Case(s): None
6. Identification Of Components

Name Of Component	Name Of Manufacturer	Manufacturer's Serial No	National Board No	Other I.D.	Year Built	Corrected, Removed Or Installed	ASME Code Stamped (Yes Or No) Code Class
PI(1)-ST-(IR-81)-3 D-220-15.0-81, 82, 83, 84	JCI	PI(1)-ST-(IR-81)-3 D-220-15.0-81, 82, 83, 84	N/A	N/A	1983	See Item 7 Below	Yes, Code Class 2

7. Description Of Work: Replaced existing valve MS-V-728A. The replacement work was performed as follows:
1) Removed existing valve MS-V-728A.
2) Installed replacement valve MS-V-728A.
3) Made required socket weld.
4) Performed visual examination on the final socket weld. Visual examination results acceptable.
5) Performed liquid penetrant (PT) examination on the final socket weld. Liquid penetrant (PT) examination results acceptable.

NOTES
1) The applicable ASME Code Cases, if any are listed on the ASME Code Data Reports.
2) The replacement valve MS-V-728A is located in the Non-ASME jurisdictional boundary. This ASME Section XI Plan No 2-2775 made ASME Section III, Code Class 2 pipe to valve MS-V-728A socket weld.

PLAN No 2-2275

ENERGY NORTHWEST
People·Vision·Solutions

FORM NIS-2 OWNER'S REPORT FOR REPAIR/REPLACEMENT ACTIVITY (Back)

8 Tests Conducted: Hydrostatic [ ] **Pneumatic** [ ] **Nominal Operating Pressure** [ ] **Other** [ ]
Exempt [X] **Test Pressure:** Psig **Test Temperature:** °F

9. Remarks (Applicable Manufacturer's Data Reports to be attached): None

CERTIFICATE OF COMPLIANCE

I certify that the statements made in this Owner's Report are correct and that this conforms to the requirements of the ASME Code, Section XI.
Type Code Symbol Stamp: Not Applicable
Certificate Of Authorization No.: Not Applicable
Expiration Date: Not Applicable

Prepared By Kuldip Singh **Signed By** Kuldip Singh
Kuldip Singh - ~~Program~~ Lead Engineer (PLE) Kuldip Singh - ~~Program~~ Lead Engineer (PLE)
Date 7/16/09 **Date** 7/16/09

CERTIFICATE OF INSERVICE INSPECTION

I, the undersigned, holding a valid commission issued by the National Board of Boiler and Pressure Vessel Inspectors and the State of _____ and employed by _____ of _____ have inspected the components described in this Owner's Report during the period _____ to _____ and state to the best of my knowledge and belief, the Owner has performed examinations and taken corrective measures described in this Owner's Report in accordance with the requirements of the ASME Code, Section XI.
By signing this certificate neither the Inspector nor his employer makes any warranty, expressed or implied, concerning the examinations and corrective measures described in this Owner's Report. Furthermore, neither the Inspector nor his employer shall be liable in any manner for any personal injury or property damage or a loss of any kind arising from or connected with this inspection.

N/R - Repair/Replacement 1" NPS And Smaller (Small Items) **Commissions** _____
Inspector's Signature National Board, State, and Endorsements
Date _____

PLAN No 2-2276

ENERGY NORTHWEST
People · Vision · Solutions

FORM NIS-2 OWNER'S REPORT FOR REPAIR/REPLACEMENT ACTIVITY
As Required By The Provisions Of The ASME Code Section XI

Date: 07/10/2009
Sheet: 1 Of 1
Unit: Not Applicable

1. Owner: Energy Northwest
Address: Columbia Generating Station, North Power Plant Loop, Richland, Washington, 99352
2. Plant: Columbia Generating Station
Address: Columbia Generating Station, North Power Plant Loop, Richland, Washington, 99352
3. (a) Work Performed By: Energy Northwest
(b) Repair/Replacement Organization P.O. No, Job No, etc.: Energy Northwest
(c) Type Code Symbol Stamp: Not Applicable
(d) Certificate Of Authorization No.: Not Applicable
(e) Expiration Date: Not Applicable
4. Identification Of System: Containment Instrument Air (CIA) System
5. (a) Applicable Construction Code: ASME Section III, Code Class 2, 1971 Edition with Winter 1973 Addenda, Code Case: Note 1
(b) Applicable Edition Of ASME Section XI Used For Repair/Replacement Activity: 2001 Edition with 2003 Addenda
(c) Applicable ASME Section XI Code Case(s): None
6. Identification Of Components

Name Of Component	Name Of Manufacturer	Manufacturer's Serial No	National Board No	Other I.D.	Year Built	Corrected, Removed Or Installed	ASME Code Stamped (Yes Or No) Code Class
CIA(3)-2	WPPSS*	CIA(3)-2-P1	N/A	N/A	1983	See Item 7 Below	Yes, Code Class 2

7. Description Of Work: Replaced pipe plug associate with tank MS-TK-4J. The replacement work was performed as follows:
1) Installed replacement pipe plug.

NOTES -
1) The applicable ASME Code Cases, if any are listed on the ASME Code Data Reports.
2) * Company name changed from Washington Public Power Supply System (WPPSS) to Energy Northwest (EN) in 1999.

PLAN No 2-2276

ENERGY NORTHWEST
People · Vision · Solutions

FORM NIS-2 OWNER'S REPORT FOR REPAIR/REPLACEMENT ACTIVITY (Back)

8 Tests Conducted: Hydrostatic [ ] Pneumatic [ ] Nominal Operating Pressure [ ] Other [ ]
Exempt [X] Test Pressure: Psig Test Temperature: °F

9. Remarks (Applicable Manufacturer's Data Reports to be attached): None

CERTIFICATE OF COMPLIANCE

I certify that the statements made in this Owner's Report are correct and that this conforms to the requirements of the ASME Code, Section XI.
Type Code Symbol Stamp: Not Applicable
Certificate Of Authorization No.: Not Applicable
Expiration Date: Not Applicable

Prepared By Kuldip Singh - Program Lead Engineer (PLE) **Signed By** Kuldip Singh - Program Lead Engineer (PLE)

Date 7/10/09 **Date** 7/10/09

CERTIFICATE OF INSERVICE INSPECTION

I, the undersigned, holding a valid commission issued by the National Board of Boiler and Pressure Vessel Inspectors and the State of _____ and employed by _____ of _____ have inspected the components described in this Owner's Report during the period _____ to _____ and state to the best of my knowledge and belief, the Owner has performed examinations and taken corrective measures described in this Owner's Report in accordance with the requirements of the ASME Code, Section XI.
By signing this certificate neither the Inspector nor his employer makes any warranty, expressed or implied, concerning the examinations and corrective measures described in this Owner's Report. Furthermore, neither the Inspector nor his employer shall be liable in any manner for any personal injury or property damage or a loss of any kind arising from or connected with this inspection.

N/R - Repair/Replacement 1" NPS And Smaller (Small Items) **Commissions** _____
Inspector's Signature National Board, State, and Endorsements

Date _____

WOT No 01142084 01

ENERGY NORTHWEST
People · Vision · Solutions

FORM NIS-2 OWNER'S REPORT FOR REPAIR/REPLACEMENT ACTIVITY
As Required By The Provisions Of The ASME Code Section XI

1. Owner: Energy Northwest
Address: Columbia Generating Station, North Power Plant Loop, Richland, Washington, 99352
2. Plant: Columbia Generating Station
Address: Columbia Generating Station, North Power Plant Loop, Richland, Washington, 99352

Date: 07/09/2009
Sheet: 1 Of 1
Unit: Not Applicable

3. (a) Work Performed By: Energy Northwest
(b) Repair/Replacement Organization P.O. No, Job No, etc.: Energy Northwest
(c) Type Code Symbol Stamp: Not Applicable
(d) Certificate Of Authorization No.: Not Applicable
(e) Expiration Date: Not Applicable
4. Identification Of System: Residual Heat Removal (RHR) System
5. (a) Applicable Construction Code: ASME Section III, Code Class 1, 1971 Edition with Winter 1973 Addenda, Code Case: Note 1
(b) Applicable Edition Of ASME Section XI Used For Repair/Replacement Activity: 2001 Edition with 2003 Addenda
(c) Applicable ASME Section XI Case(s): None
6. Identification Of Components

Name Of Component	Name Of Manufacturer	Manufacturer's Serial No	National Board No	Other I.D.	Year Built	Corrected, Removed Or Installed	ASME Code Stamped (Yes Or No) Code Class
RHR(1)-4A1	WPPSS*	RHR(1)-4A1-P1	N/A	N/A	1983	See Item 7 Below	Yes, Code Class 1
RHR-SA-32(W)	Pacific Scientific	9937	N/A	PSA-10	1981	Removed	No, Code Class 1
RHR-SA-32(W)	Pacific Scientific	8786	N/A	PSA-10	1982	Installed	Yes, Code Class 1

7. Description Of Work Performed: Replaced existing snubber for pipe support RHR-SA-32(W). The replacement work was performed as follows:

1) Removed existing snubber Serial No 9937.
2) Installed pretested replacement snubber Serial No 8786.
3) Torqued the fasteners to the required torque value.
4) Performed visual examination on the installed replacement snubber. Visual examination results acceptable.

NOTES -

1) The applicable ASME Code Cases, if any are listed on the ASME Code Data Reports.
2) * Company name changed from Washington Public Power Supply System (WPPSS) to Energy Northwest (EN) in 1999.
3) The existing ASME Code Stamped piping system in which the replacement snubber was installed is Residual Heat Removal (RHR) piping system RHR(1)-4A1-P1. This piping system is certified to comply with ASME Section III, Code Class 1, 1971 Edition with Winter 1973 Addenda requirements.
4) The replacement snubber Serial No 8786 is certified to comply with ASME Section III, Code Class NF(1), 1977 Edition with Winter 1977 Addenda requirements.
5) (W) = West.

PLAN No 01142084 01

ENERGY NORTHWEST
People · Vision · Solutions

FORM NIS-2 OWNER'S REPORT FOR REPAIR/REPLACEMENT ACTIVITY (Back)

8 Tests Conducted: Hydrostatic [ ] **Pneumatic** [ ] **Nominal Operating Pressure** [ ] **Other** [ ]
Exempt [X] **Test Pressure:** Psig **Test Temperature:** ° F

9. Remarks (Applicable Manufacturer's Data Reports to be attached): See attached NF-1 Code Data Report for the replacement snubber Serial No 8786.

CERTIFICATE OF COMPLIANCE

I certify that the statements made in this Owner's Report are correct and that this conforms to the requirements of the ASME Code, Section XI.
Type Code Symbol Stamp: Not Applicable
Certificate Of Authorization No.: Not Applicable
Expiration Date: Not Applicable

Prepared By Kuldip Singh — Kuldip Singh - Program Lead Engineer (PLE)
Signed By Kuldip Singh — Kuldip Singh - Program Lead Engineer (PLE)
Date 7/9/09 ***Date*** 7/9/09.

CERTIFICATE OF INSERVICE INSPECTION

I, the undersigned, holding a valid commission issued by the National Board of Boiler and Pressure Vessel Inspectors and the State of Washington ***and employed by*** Hartford Steam Boiler Of Connecticut of Hartford, Connecticut ***have inspected the components described in this Owner's Report during the period*** 5/11/2009 ***to*** 7/17/2009 ***and state to the best of my knowledge and belief, the Owner has performed examinations and taken corrective measures described in this Owner's Report in accordance with the requirements of the ASME Code, Section XI.***
By signing this certificate neither the Inspector nor his employer makes any warranty, expressed or implied, concerning the examinations and corrective measures described in this Owner's Report. Furthermore, neither the Inspector nor his employer shall be liable in any manner for any personal injury or property damage or a loss of any kind arising from or connected with this inspection.

Inspector's Signature — ***Commissions*** 13172 WANI
National Board, State, and Endorsements

Date 7/17/2009

WOT No. 01142084 01

FORM NF-1 NPT CERTIFICATE HOLDERS' DATA REPORT FOR COMPONENT SUPPORTS*

As Required by the Provisions of the ASME Code Rules, Section III, Division 1 #10

1. Manufactured by Pacific Scientific 1346 S. State College Blvd. Anaheim, Ca. 92803
(Name and address of NPT Certificate Holder)

2. Manufacturer for ITT Grinnell Corporation 621 Dana Street N.E. Warren, Ohio 44481
(Name and address of purchaser or owner) E-WZ-274

3. Location of Installation Unknown

4. Identification

	(a) Component Support I.D. No.	(b) Canadian Registration No.	(c) Applicable Drawings with Last Rev. & Date	(d) Stress Report or Load Capacity Data Sheet	(e) Type of Component Support	(f) Class	(g) Nat'l Board No.	(h) Year Built
(1)	8761-8860	None	1801103-07-H	DR-1352-Rev. B	Linear	1	None	1981
(2)								
(3)								
(4)	RHR-SA-32(W), S/N 8786							
(5)								
(6)								
(7)								
(8)								
(9)								
(10)								

Andy Simpson 7/9/05.

5. Remarks:

CERTIFICATE OF COMPLIANCE

We certify that the statements made in this report are correct and that these components supports conform to the rules of construction of the ASME Code for Nuclear Power Plant Components, Section III, Division 1, Edition 1977, Addenda Winter '77 (Date), Code Case No. 1644-7

Date 3/20/81 Signed Pacific Scientific (NPT Certificate Holder) by [signature]

Our ASME Certificate of Authorization No. 1198 to use the Component Supports (NPT)

Symbol expires Aug. 4, 1981 (Date).

CERTIFICATION OF DESIGN

Design Information on File at Pacific Scientific

Stress Report or Load Capacity Data Sheets on File at:
Pacific Scientific
Filed Per NA 3256

Design Specifications Certified by (1) Leo E. Ay PE State California

Reg. No. 13533.

Stress Analysis Report or Load Capacity Data Sheets Certified by (1) Leo E. Ay

PE State California Reg. No. 13533.

(1) name only, signature not required.

*Supplemental sheets in form of lists, sketches or drawings may be used provided (1) size is 8½ in., (2) information in items 1, 2, 4c, 4g on this Data Report is included on each sheet, and (3) each sheet is numbered and number of sheets is recorded at the top of this form.

CERTIFICATE OF SHOP INSPECTION

I, the undersigned, holding a valid commission issued by the National Board of Boiler and Pressure Vessel Inspectors and the Province of California and employed by HSBI&I Co. of Hartford, CT have inspected the component supports described in this Data Report on 3/20 19 81 and state that to the best of my knowledge and belief the NPT Certificate Holder has constructed these component supports in accordance with the ASME Code for Nuclear Power Plant Components.

By signing this certificate, neither the Inspector nor his employer makes any warranty, expressed or implied, concerning the component supports described in this Data Report. Furthermore, neither the Inspector nor his employer shall be liable in any manner for any personal injury or property damage or a loss of any kind arising from or connected with this inspection.

Date 3/20/81.

Signed William [illegible] Commissions Ca #1494
(Nat'l Bd., State, Prov., and No.)

CERTIFICATION OF FIELD INSPECTION

I, the undersigned, holding a valid commission issued by the National Board of Boiler and Pressure Vessel Inspectors and the State or Province of _____ and employed by _____ of _____ have compared the statements in this Data Report with the described component supports and state that the parts referred to as data items _____, not included in the certificate of shop inspection, have been inspected by me and that to the best of my knowledge and belief the NPT Certificate Holder has constructed these component supports in accordance with the ASME Code for Nuclear Power Plant Components.

By signing this certificate neither the Inspector nor his employer makes any warranty, expressed or implied, concerning the component supports described in this Data Report. Furthermore, neither the inspector nor his employer shall be liable in any manner for any personal injury or property damage or a loss of any kind arising from or connected with this inspection.

Date _____.

Signed _____ Commissions _____
(Nat'l Bd., State, Prov., and No.)

WOT No 01142084 01

ENERGY NORTHWEST
People · Vision · Solutions

FORM NIS-2 OWNER'S REPORT FOR REPAIR/REPLACEMENT ACTIVITY
As Required By The Provisions Of The ASME Code Section XI

1. Owner: Energy Northwest
Address: Columbia Generating Station, North Power Plant Loop, Richland, Washington, 99352
2. Plant: Columbia Generating Station
Address: Columbia Generating Station, North Power Plant Loop, Richland, Washington, 99352

Date: 07/09/2009
Sheet: 1 Of 1
Unit: Not Applicable

3. (a) Work Performed By: Energy Northwest
(b) Repair/Replacement Organization P.O. No, Job No, etc.: Energy Northwest
(c) Type Code Symbol Stamp: Not Applicable
(d) Certificate Of Authorization No.: Not Applicable
(e) Expiration Date: Not Applicable
4. Identification Of System: Reactor Recirculation Cooling (RRC) System
5. (a) Applicable Construction Code: ASME Section III, Code Class 1, 1971 Edition with Winter 1973 Addenda, Code Case: Note 1
(b) Applicable Edition Of ASME Section XI Used For Repair/Replacement Activity: 2001 Edition with 2003 Addenda
(c) Applicable ASME Section XI Case(s): None
6. Identification Of Components

Name Of Component	Name Of Manufacturer	Manufacturer's Serial No	National Board No	Other I.D.	Year Built	Corrected, Removed Or Installed	ASME Code Stamped (Yes Or No) Code Class
RRC(51)-4	WPPSS*	RRC(51)-4-P1	N/A	N/A	1983	See Item 7 Below	Yes, Code Class 1
RHR-SA-52	Pacific Scientific	9852	N/A	PSA-10	1981	Removed	Yes, Code Class 1
RHR-SA-52	Pacific Scientific	13375	N/A	PSA-10	1982	Installed	Yes, Code Class 1

7. Description Of Work Performed: Replaced existing snubber for pipe support RHR-SA-52. The replacement work was performed as follows:

1) Removed existing snubber Serial No 9852.
2) Installed pretested replacement snubber Serial No 13375.
3) Torqued the fasteners to the required torque value.
4) Performed visual examination on the installed replacement snubber. Visual examination results acceptable.

NOTES -

1) The applicable ASME Code Cases, if any are listed on the ASME Code Data Reports.
2) * Company name changed from Washington Public Power Supply System (WPPSS) to Energy Northwest (EN) in 1999.
3) The existing ASME Code Stamped piping system in which the replacement snubber was installed is Reactor Recirculation Cooling (RRC) piping system RRC(51)-4-P1. This piping system is certified to comply with ASME Section III, Code Class 1, 1971 Edition with Winter 1973 Addenda requirements.
4) The replacement snubber Serial No 13375 is certified to comply with ASME Section III, Code Class NF(1), 1977 Edition with Winter 1978 Addenda requirements.
5) RHR-SA-52 support for RRC(51)-4-P1piping system.

PLAN No 01142084 01

ENERGY NORTHWEST
People · Vision · Solutions

FORM NIS-2 OWNER'S REPORT FOR REPAIR/REPLACEMENT ACTIVITY (Back)

8 Tests Conducted: Hydrostatic [ ] **Pneumatic** [ ] **Nominal Operating Pressure** [ ] **Other** [ ]
Exempt [X] **Test Pressure:** Psig **Test Temperature:** °F

9. Remarks (Applicable Manufacturer's Data Reports to be attached): See attached NF-1 Code Data Report for the replacement snubber Serial No 13375.

CERTIFICATE OF COMPLIANCE

I certify that the statements made in this Owner's Report are correct and that this conforms to the requirements of the ASME Code, Section XI.
Type Code Symbol Stamp: Not Applicable
Certificate Of Authorization No.: Not Applicable
Expiration Date: Not Applicable

Prepared By Kuldip Singh - Program Lead Engineer (PLE) **Signed By** Kuldip Singh - Program Lead Engineer (PLE)

Date 7/9/09 **Date** 7/9/09.

CERTIFICATE OF INSERVICE INSPECTION

I, the undersigned, holding a valid commission issued by the National Board of Boiler and Pressure Vessel Inspectors and the State of Washington ***and employed by*** Hartford Steam Boiler Of Connecticut of Hartford, Connecticut ***have inspected the components described in this Owner's Report during the period*** 5/11/2009 ***to*** 7/17/2009 ***and state to the best of my knowledge and belief, the Owner has performed examinations and taken corrective measures described in this Owner's Report in accordance with the requirements of the ASME Code, Section XI.***
By signing this certificate neither the Inspector nor his employer makes any warranty, expressed or implied, concerning the examinations and corrective measures described in this Owner's Report. Furthermore, neither the Inspector nor his employer shall be liable in any manner for any personal injury or property damage or a loss of any kind arising from or connected with this inspection.

Inspector's Signature **Commissions** 13172 WANI
National Board, State, and Endorsements

Date 7/17/2009

WOT No. 011420801 #1

FORM NF-1 NPT CERTIFICATE HOLDERS' DATA REPORT FOR COMPONENT SUPPORTS*

As Required by the Provisions of the ASME Code Rules, Section III, Division 1 E-WZ-090

~~Kin Tech Division~~

1. Manufactured by Pacific Scientific 1346 S. State College Blvd. Anaheim, Ca. 92803
(Name and address of NPT Certificate Holder)

2. Manufacturer for ITT Grinnell Corporation 621 Dana Street N.E. Warren, Ohio 44481
(Name and address of purchaser or owner)

3. Location of Installation Unknown

4. Identification

	(a) Component Support I.D. No.	(b) Canadian Registration No.	(c) Applicable Drawings with Last Rev. & Date	(d) Stress Report or Load Capacity Data Sheet	(e) Type of Component Support	(f) Class	(g) Nat'l Board No.	(h) Year Built
(1)	13316	None	1801103-07-T	DR 1416 Rev.0	Linear	1	None	1982
(2)	thru							
(3)	13501							
(4)								
(5)	PHR-SA-52, S/N 13375							
(6)								
(7)								
(8)					Philip Sims			
(9)								
(10)					7/9/05.			

5. Remarks: Inspection Test Reports, CMTR's and Certificate of Conformance reviewed and meet ASME Sec III 1974 Edition, Summer '76 Addenda and Code Case 1644-6.

CERTIFICATE OF COMPLIANCE

We certify that the statements made in this report are correct and that these components supports conform to the rules of construction of the ASME Code for Nuclear Power Plant Components, Section III, Division 1, Edition 1977, Addenda Winter '78 (Date), Code Case No. 1644-7

Date 7-22-82 Signed Pacific Scientific (NPT Certificate Holder) by Ronald A. Nava

Our ASME Certificate of Authorization No. 1198 to use the "NPT" (NPT)

Symbol expires Aug. 4, 1984 (Date).

ITT GRINNELL CORP.
Warren Quality Assurance

CERTIFICATION OF DESIGN

AUG 05 1982

Design Information on File at Pacific Scientific

REVIEWED BY

Stress Report or Load Capacity Data Sheets on File at:
Pacific Scientific
Filed Per NCA 3256

Design Specifications Certified by (1) Leo E. Ay PE State California

Reg. No. 13533.

Stress Analysis Report or Load Capacity Data Sheets Certified by (1) Leo E. Ay

PE State California Reg. No. 13533.

(1) List name only, signature not required.

*Supplemental sheets in form of lists, sketches or drawings may be used provided (1) size is 8½ in., (2) information in items 1, 2, 4c, 4g on this Data Report is included on each sheet, and (3) each sheet is numbered and number of sheets is recorded at top of this form.

CERTIFICATE OF SHOP INSPECTION

I, the undersigned, holding a valid commission issued by the National Board of Boiler and Pressure Vessel Inspectors and the State or Province of OHIO and employed by HSBI&I Co. of Hartford, CT have inspected the component supports described in this Data Report on JUL 23 1982, 19__ and state that to the best of my knowledge and belief the NPT Certificate Holder has constructed these component supports in accordance with the ASME Code for Nuclear Power Plant Components.

By signing this certificate, neither the Inspector nor his employer makes any warranty, expressed or implied, concerning the component supports described in this Data Report. Furthermore, neither the Inspector nor his employer shall be liable in any manner for any personal injury or property damage or a loss of any kind arising from or connected with this inspection.

Date JUL 23 1982

Signed [signature] Commissions CA-1573/OHIO COMMISSION
(Nat'l Bd., State, Prov., and No.)

CERTIFICATION OF FIELD INSPECTION

I, the undersigned, holding a valid commission issued by the National Board of Boiler and Pressure Vessel Inspectors and the State or Province of _____ and employed by _____ of _____ have compared the statements in this Data Report with the described component supports and state that the parts referred to as data items _____, not included in the certificate of shop inspection, have been inspected by me and that to the best of my knowledge and belief the NPT Certificate Holder has constructed these component supports in accordance with the ASME Code for Nuclear Power Plant Components.

By signing this certificate neither the Inspector nor his employer makes any warranty, expressed or implied, concerning the component supports described in this Data Report. Furthermore, neither the inspector nor his employer shall be liable in any manner for any personal injury or property damage or a loss of any kind arising from or connected with this inspection.

Date _____

Signed _____ Commissions _____
(Nat'l Bd., State, Prov., and No.)

WOT No 01142084 01

ENERGY NORTHWEST
People · Vision · Solutions

FORM NIS-2 OWNER'S REPORT FOR REPAIR/REPLACEMENT ACTIVITY
As Required By The Provisions Of The ASME Code Section XI

1. Owner: Energy Northwest
Address: Columbia Generating Station, North Power Plant Loop, Richland, Washington, 99352
2. Plant: Columbia Generating Station
Address: Columbia Generating Station, North Power Plant Loop, Richland, Washington, 99352

Date: 07/09/2009
Sheet: 1 Of 1
Unit: Not Applicable

3. (a) Work Performed By: Energy Northwest
(b) Repair/Replacement Organization P.O. No, Job No, etc.: Energy Northwest
(c) Type Code Symbol Stamp: Not Applicable
(d) Certificate Of Authorization No.: Not Applicable
(e) Expiration Date: Not Applicable
4. Identification Of System: Main Steam (MS) System
5. (a) Applicable Construction Code: ASME Section III, Code Class 3, 1971 Edition with Winter 1973 Addenda, Code Case: Note 1
(b) Applicable Edition Of ASME Section XI Used For Repair/Replacement Activity: 2001 Edition with 2003 Addenda
(c) Applicable ASME Section XI Case(s): None
6. Identification Of Components

Name Of Component	Name Of Manufacturer	Manufacturer's Serial No	National Board No	Other I.D.	Year Built	Corrected, Removed Or Installed	ASME Code Stamped (Yes Or No) Code Class
MS(18)-2-17	WPPSS*	MS(18)-2-17-P1	N/A	N/A	1983	See Item 7 Below	Yes, Code Class 3
MSRV-2D-2	Pacific Scientific	326	N/A	PSA-10	1976	Removed	Yes, Code Class 1
MSRV-2D-2	Pacific Scientific	9421	N/A	PSA-10	1981	Installed	Yes, Code Class 1

7. Description Of Work Performed: Replaced existing snubber for pipe support MSRV-2D-2. The replacement work was performed as follows:

1) Removed existing snubber Serial No 326.
2) Installed pretested replacement snubber Serial No 9421.
3) Torqued the fasteners to the required torque value.
4) Performed visual examination on the installed replacement snubber. Visual examination results acceptable.

NOTES -

1) The applicable ASME Code Cases, if any are listed on the ASME Code Data Reports.
2) * Company name changed from Washington Public Power Supply System (WPPSS) to Energy Northwest (EN) in 1999.
3) The existing ASME Code Stamped piping system in which the replacement snubber was installed is Main Steam (MS) piping system MS(18)-2-17-P1. This piping system is certified to comply with ASME Section III, Code Class 3, 1971 Edition with Winter 1973 Addenda requirements.
4) The replacement snubber Serial No 9421 is certified to comply with ASME Section III, Code Class NF(1), 1977 Edition with Winter 1977 Addenda requirements.
5) ASME Section III, Code Class NF(1) replacement snubber for ASME Section III, Code Class NF(3) application.

PLAN No 01142084 01

ENERGY NORTHWEST
People · Vision · Solutions

FORM NIS-2 OWNER'S REPORT FOR REPAIR/REPLACEMENT ACTIVITY (Back)

8 Tests Conducted: Hydrostatic [ ] **Pneumatic** [ ] **Nominal Operating Pressure** [ ] **Other** [ ]
Exempt [X] **Test Pressure:** Psig **Test Temperature:** °F

9. Remarks (Applicable Manufacturer's Data Reports to be attached): See attached NF-1 Code Data Report for the replacement snubber Serial No 9421.

CERTIFICATE OF COMPLIANCE

I certify that the statements made in this Owner's Report are correct and that this conforms to the requirements of the ASME Code, Section XI.
Type Code Symbol Stamp: Not Applicable
Certificate Of Authorization No.: Not Applicable
Expiration Date: Not Applicable

Prepared By Kuldip Singh - Program Lead Engineer (PLE) ***Signed By*** Kuldip Singh - Program Lead Engineer (PLE)

Date 7/9/09 ***Date*** 7/9/09

CERTIFICATE OF INSERVICE INSPECTION

I, the undersigned, holding a valid commission issued by the National Board of Boiler and Pressure Vessel Inspectors and the State of Washington ***and employed by*** Hartford Steam Boiler Of Connecticut of Hartford, Connecticut ***have inspected the components described in this Owner's Report during the period*** 5/11/2009 ***to*** 7/17/2009 ***and state to the best of my knowledge and belief, the Owner has performed examinations and taken corrective measures described in this Owner's Report in accordance with the requirements of the ASME Code, Section XI.***
By signing this certificate neither the Inspector nor his employer makes any warranty, expressed or implied, concerning the examinations and corrective measures described in this Owner's Report. Furthermore, neither the Inspector nor his employer shall be liable in any manner for any personal injury or property damage or a loss of any kind arising from or connected with this inspection.

Inspector's Signature ***Commissions*** 13172 WANI
National Board, State, and Endorsements

Date 7/17/2009

WOT NO. 01142084 01

*REVISED DATA REPORT

FORM NF-1 NPT CERTIFICATE HOLDERS' DATA REPORT FOR COMPONENT SUPPORTS*

As Required by the Provisions of the ASME Code Rules, Section III, Division 1

#10

1. Manufactured by Pacific Scientific 1346 S. State College Blvd. Anaheim, Ca. 92803
(Name and address of NPT Certificate Holder)

2. Manufacturer for ITT GRINNELL CORPORATION 621 Dana Street N.E. Warren, Ohio 44481
(Name and address of purchaser or owner)

E-WT-688

3. Location of Installation Unknown

4. Identification

	(a) Component Support I.D. No.	(b) Canadian Registration No.	(c) Applicable Drawings with Last Rev. & Date	(d) Stress Report or Load Capacity Data Sheet	(e) Type of Component Support	(f) Class	(g) Nat'l Board No.	(h) Year Built
(1)	9369-9503	None	1801103-07-H	DR-1352-Rev. B	Linear	1	None	1981
(2)								
(3)								
(4)								
(5)	MS-RV-20-2, S/N 9421							
(6)								
(7)								
(8)								
(9)								
(10)								

REVIEWED BY JAB 4-1-82 EBASCO ENGINEERING

REVIEW VERIFIED BY EBASCO VQA REP.

7/9/09.

5. Remarks: Corrected Code Case.

CERTIFICATE OF COMPLIANCE

We certify that the statements made in this report are correct and that these components supports conform to the rules of construction of the ASME Code for Nuclear Power Plant Components, Section III, Division 1, Edition 1977, Addenda Winter '77 (Date)

Code Case No. * 1644-5

Date 2/3/81 Signed Pacific Scientific (NPT Certificate Holder) by Rosalie A. Nasta

Our ASME Certificate of Authorization No. 1198 to use the Component Support (NPT)

Symbol expires Aug. 4, 1981 (Date)

CERTIFICATION OF DESIGN

Design Information on File at Pacific Scientific

Stress Report or Load Capacity Data Sheets on File at:
Pacific Scientific
Filed Per NA 3256

Design Specifications Certified by (1) Leo E. Ay PE State California

Reg. No. 13533

Stress Analysis Report or Load Capacity Data Sheets Certified by (1) Leo E. Ay

PE State California Reg. No. 13533

ITT GRINNELL
Warren Quality Assurance
FEB 0 0 1981
REVIEWED BY

(1) List name only, signature not required.

Supplemental sheets in form of lists, sketches or drawings may be used provided (1) size is 8½ in. x 11 in., (2) information in items 1, 2, 3c, 4g on this Data Report is included on each sheet, and (3) each sheet is numbered and number of sheets is recorded at top of this form.

(10/77) This form (E00075) may be obtained from the Order Dept., ASME, 345 E. 47th St., New York, N.Y. 10017

CERTIFICATE OF SHOP INSPECTION

I, the undersigned, holding a valid commission issued by the National Board of Boiler and Pressure Vessel Inspectors and the State or Province of California and employed by HSBI&I Co. of Hartford, CT have inspected the component supports described in this Data Report on 2/3 19 81 and state that to the best of my knowledge and belief the NPT Certificate Holder has constructed these component supports in accordance with the ASME Code for Nuclear Power Plant Components.

By signing this certificate, neither the Inspector nor his employer makes any warranty, expressed or implied, concerning the component supports described in this Data Report. Furthermore, neither the Inspector nor his employer shall be liable in any manner for any personal injury or property damage or a loss of any kind arising from or connected with this inspection.

Date 2/3/81

Signed William Meyer Commissions Ca. #1494
(Nat'l Bd., State, Prov., and No.)

CERTIFICATION OF FIELD INSPECTION

I, the undersigned, holding a valid commission issued by the National Board of Boiler and Pressure Vessel Inspectors and the State or Province of _____ and employed by _____ of _____ have compared the statements in this Data Report with the described component supports and state that the parts referred to as data items _____, not included in the certificate of shop inspection, have been inspected by me and that to the best of my knowledge and belief the NPT Certificate Holder has constructed these component supports in accordance with the ASME Code for Nuclear Power Plant Components.

By signing this certificate neither the Inspector nor his employer makes any warranty, expressed or implied, concerning the component supports described in this Data Report. Furthermore, neither the inspector nor his employer shall be liable in any manner for any personal injury or property damage or a loss of any kind arising from or connected with this inspection.

Date _____

Signed _____ Commissions _____
(Nat'l Bd., State, Prov., and No.)

WOT No 01142084 01

ENERGY NORTHWEST
People · Vision · Solutions

FORM NIS-2 OWNER'S REPORT FOR REPAIR/REPLACEMENT ACTIVITY
As Required By The Provisions Of The ASME Code Section XI

1. Owner: Energy Northwest
Address: Columbia Generating Station, North Power Plant Loop, Richland, Washington, 99352
2. Plant: Columbia Generating Station
Address: Columbia Generating Station, North Power Plant Loop, Richland, Washington, 99352

Date: 07/09/2009
Sheet: 1 Of 1
Unit: Not Applicable

3. (a) Work Performed By: Energy Northwest
(b) Repair/Replacement Organization P.O. No, Job No, etc.: Energy Northwest
(c) Type Code Symbol Stamp: Not Applicable
(d) Certificate Of Authorization No.: Not Applicable
(e) Expiration Date: Not Applicable
4. Identification Of System: Main Steam (MS) System
5. (a) Applicable Construction Code: ASME Section III, Code Class 3, 1971 Edition with Winter 1973 Addenda, Code Case: Note 1
(b) Applicable Edition Of ASME Section XI Used For Repair/Replacement Activity: 2001 Edition with 2003 Addenda
(c) Applicable ASME Section XI Case(s): None
6. Identification Of Components

Name Of Component	Name Of Manufacturer	Manufacturer's Serial No	National Board No	Other I.D.	Year Built	Corrected, Removed Or Installed	ASME Code Stamped (Yes Or No) Code Class
MS(18)-2-18	WPPSS*	MS(18)-2-18-P1	N/A	N/A	1983	See Item 7 Below	Yes, Code Class 3
MSRV-1D-3	Pacific Scientific	10931	N/A	PSA-10	1981	Removed	Yes, Code Class 1
MSRV-1D-3	Pacific Scientific	9614	N/A	PSA-10	1981	Installed	Yes, Code Class 1

7. Description Of Work Performed: Replaced existing snubber for pipe support MSRV-1D-3. The replacement work was performed as follows:

1) Removed existing snubber Serial No 10931.
2) Installed pretested replacement snubber Serial No 9614.
3) Torqued the fasteners to the required torque value.
4) Performed visual examination on the installed replacement snubber. Visual examination results acceptable.

NOTES -

1) The applicable ASME Code Cases, if any are listed on the ASME Code Data Reports.
2) * Company name changed from Washington Public Power Supply System (WPPSS) to Energy Northwest (EN) in 1999.
3) The existing ASME Code Stamped piping system in which the replacement snubber was installed is Main Steam (MS) piping system MS(18)-2-18-P1. This piping system is certified to comply with ASME Section III, Code Class 3, 1971 Edition with Winter 1973 Addenda requirements.
4) The replacement snubber Serial No 9614 is certified to comply with ASME Section III, Code Class NF(1), 1977 Edition with Winter 1977 Addenda requirements.
5) ASME Section III, Code Class NF(1) replacement snubber for ASME Section III, Code Class NF(3) application.

PLAN No 01142084 01

ENERGY NORTHWEST
People · Vision · Solutions

FORM NIS-2 OWNER'S REPORT FOR REPAIR/REPLACEMENT ACTIVITY (Back)

8 Tests Conducted: Hydrostatic [ ] Pneumatic [ ] Nominal Operating Pressure [ ] Other [ ]
Exempt [X] Test Pressure: Psig Test Temperature: °F

9. Remarks (Applicable Manufacturer's Data Reports to be attached): See attached NF-1 Code Data Report for the replacement snubber Serial No 9641.

CERTIFICATE OF COMPLIANCE

I certify that the statements made in this Owner's Report are correct and that this conforms to the requirements of the ASME Code, Section XI.
Type Code Symbol Stamp: Not Applicable
Certificate Of Authorization No.: Not Applicable
Expiration Date: Not Applicable

Prepared By Kuldip Singh - Program Lead Engineer (PLE) Signed By Kuldip Singh - Program Lead Engineer (PLE)
Date 7/9/09 Date 7/9/09

CERTIFICATE OF INSERVICE INSPECTION

I, the undersigned, holding a valid commission issued by the National Board of Boiler and Pressure Vessel Inspectors and the State of Washington *and employed by* Hartford Steam Boiler Of Connecticut of Hartford, Connecticut *have inspected the components described in this Owner's Report during the period* 5/11/2009 *to* 7/17/2009 *and state to the best of my knowledge and belief, the Owner has performed examinations and taken corrective measures described in this Owner's Report in accordance with the requirements of the ASME Code, Section XI.*
By signing this certificate neither the Inspector nor his employer makes any warranty, expressed or implied, concerning the examinations and corrective measures described in this Owner's Report. Furthermore, neither the Inspector nor his employer shall be liable in any manner for any personal injury or property damage or a loss of any kind arising from or connected with this inspection.

Inspector's Signature Commissions 13172 WANI
National Board, State, and Endorsements

Date 7/17/2009

WOT No. 01142084-01
#10

As Required by the Provisions of the ASME Code Rules, Section III, Division 1

E-WZ-090

1. Manufactured by Pacific Scientific 1346 S. State College Blvd Anaheim, CA. 92303
(Name and address of NPT Certificate Holder)

2. Manufacturer for ITT Grinnell Corp. 621 Dana Street N.E. Warren, Ohio 44481
(Name and address of purchaser or owner)

3. Location of Installation Unknown

4. Identification

	(a) Component Support I.D. No.	(b) Canadian Registration No.	(c) Applicable Drawings with Last Rev. & Date	(d) Stress Report or Load Capacity Data Sheet	(e) Type of Component Support	(f) Class	(g) Nat'l Board No.	(h) Year Built
(1)	9526-9621	None	1801103-07-H	DR-1352-Rev. B	Linear	1	None	1981
(2)								
(3)								
(4)								
(5)	MSRV-ID-3, SIN 9614							
(6)								
(7)								
(8)								
(9)								
(10)								

5. Remarks: 7/9/09

CERTIFICATE OF COMPLIANCE

We certify that the statements made in this report are correct and that these components supports conform to the rules of construction of the ASME Code for Nuclear Power Plant Components, Section III, Division 1, Edition 1977, Addenda Winter '77 (Date)

Code Case No. 1644-7

Date 2/13/81 Signed Pacific Scientific (NPT Certificate Holder) by Rosalie A. Nanza

Our ASME Certificate of Authorization No. 1198 to use the Component Supports (NPT)

Symbol expires Aug. 4, 1981 (Date)

CERTIFICATION OF DESIGN

Design Information on File at Pacific Scientific

Stress Report or Load Capacity Data Sheets on File at Pacific Scientific

Filed Per NA 3256

Design Specifications Certified by (1) Leo E. Ay PE State California

Reg. No. 13533

Stress Analysis Report or Load Capacity Data Sheets Certified by (1) Leo E. Ay

PE State California Reg. No. 13533

(1) List name only, signature not required.

Supplemental sheets in form of lists, sketches or drawings may be used provided (1) size is 8½ in., (2) information in items 1, 2, 4c, 4g on this Data Report is included on each sheet, and (3) each sheet is numbered and number of sheets is recorded at top of this form.

CERTIFICATE OF SHOP INSPECTION

I the undersigned, holding a valid commission issued by the National Board of Boiler and Pressure Vessel Inspectors and the State or Province of California and employed by HSBI&I Co. of Hartford, CT have inspected the component supports described in this Data Report on 2/14, 1981 and state that to the best of my knowledge and belief the NPT Certificate Holder has constructed these component supports in accordance with the ASME Code for Nuclear Power Plant Components.

By signing this certificate, neither the Inspector nor his employer makes any warranty, expressed or implied, concerning the component supports described in this Data Report. Furthermore, neither the Inspector nor his employer shall be liable in any manner for any personal injury or property damage or a loss of any kind arising from or connected with this inspection.

Date 2/14/81.

Signed William Meyer Commissions Ca. #1494
(Nat'l Bd., State, Prov., and No.)

CERTIFICATION OF FIELD INSPECTION

I, the undersigned, holding a valid commission issued by the National Board of Boiler and Pressure Vessel Inspectors and the State or Province of _____ and employed by _____ of _____ have compared the statements in this Data Report with the described component supports and state that the parts referred to as data items _____, not included in the certificate of shop inspection, have been inspected by me and that to the best of my knowledge and belief the NPT Certificate Holder has constructed these component supports in accordance with the ASME Code for Nuclear Power Plant Components.

By signing this certificate neither the Inspector nor his employer makes any warranty, expressed or implied, concerning the component supports described in this Data Report. Furthermore, neither the inspector nor his employer shall be liable in any manner for any personal injury or property damage or a loss of any kind arising from or connected with this inspection.

Date _____.

Signed _____ Commissions _____
(Nat'l Bd., State, Prov., and No.)

WOT No 01142084 01

ENERGY NORTHWEST
People · Vision · Solutions

FORM NIS-2 OWNER'S REPORT FOR REPAIR/REPLACEMENT ACTIVITY
As Required By The Provisions Of The ASME Code Section XI

1. Owner: Energy Northwest
Address: Columbia Generating Station, North Power Plant Loop, Richland, Washington, 99352
2. Plant: Columbia Generating Station
Address: Columbia Generating Station, North Power Plant Loop, Richland, Washington, 99352

Date: 07/09/2009
Sheet: 1 Of 1
Unit: Not Applicable

3. (a) Work Performed By: Energy Northwest
(b) Repair/Replacement Organization P.O. No, Job No, etc.: Energy Northwest
(c) Type Code Symbol Stamp: Not Applicable
(d) Certificate Of Authorization No.: Not Applicable
(e) Expiration Date: Not Applicable
4. Identification Of System: Main Steam (MS) System
5. (a) Applicable Construction Code: ASME Section III, Code Class 3, 1971 Edition with Winter 1973 Addenda, Code Case: Note 1
(b) Applicable Edition Of ASME Section XI Used For Repair/Replacement Activity: 2001 Edition with 2003 Addenda
(c) Applicable ASME Section XI Case(s): None
6. Identification Of Components

Name Of Component	Name Of Manufacturer	Manufacturer's Serial No	National Board No	Other I.D.	Year Built	Corrected, Removed Or Installed	ASME Code Stamped (Yes Or No) Code Class
MS(18)-2-7	WPPSS*	MS(18)-2-7-P1	N/A	N/A	1983	See Item 7 Below	Yes, Code Class 3
MSRV-3C-2	Pacific Scientific	4865	N/A	PSA-10	1979	Removed	No, Code Class 1
MSRV-3C-2	Pacific Scientific	7108	N/A	PSA-10	1980	Installed	Yes, Code Class 1

7. Description Of Work Performed: Replaced existing snubber for pipe support MSRV-3C-2. The replacement work was performed as follows:

1) Removed existing snubber Serial No 4865.
2) Installed pretested replacement snubber Serial No 7108.
3) Torqued the fasteners to the required torque value.
4) Performed visual examination on the installed replacement snubber. Visual examination results acceptable.

NOTES -

1) The applicable ASME Code Cases, if any are listed on the ASME Code Data Reports.
2) * Company name changed from Washington Public Power Supply System (WPPSS) to Energy Northwest (EN) in 1999.
3) The existing ASME Code Stamped piping system in which the replacement snubber was installed is Main Steam (MS) piping system MS(18)-2-7-P1. This piping system is certified to comply with ASME Section III, Code Class 3, 1971 Edition with Winter 1973 Addenda requirements.
4) The replacement snubber Serial No 7108 is certified to comply with ASME Section III, Code Class NF(1), 1977 Edition with Winter 1977 Addenda requirements.
5) ASME Section III, Code Class NF(1) replacement snubber for ASME Section III, Code Class NF(3) application.

PLAN No 01142084 01

ENERGY NORTHWEST
People · Vision · Solutions

FORM NIS-2 OWNER'S REPORT FOR REPAIR/REPLACEMENT ACTIVITY (Back)

8 Tests Conducted: Hydrostatic [ ] **Pneumatic** [ ] **Nominal Operating Pressure** [ ] **Other** [ ]
Exempt [X] **Test Pressure:** Psig **Test Temperature:** °F

9. Remarks (Applicable Manufacturer's Data Reports to be attached): See attached NF-1 Code Data Report for the replacement snubber Serial No 7108.

CERTIFICATE OF COMPLIANCE

I certify that the statements made in this Owner's Report are correct and that this conforms to the requirements of the ASME Code, Section XI.
Type Code Symbol Stamp: Not Applicable
Certificate Of Authorization No.: Not Applicable
Expiration Date: Not Applicable

Prepared By Kuldip Singh — Kuldip Singh - Program Lead Engineer (PLE)
Date 7/9/09

Signed By Kuldip Singh — Kuldip Singh - Program Lead Engineer (PLE)
Date 7/9/09.

CERTIFICATE OF INSERVICE INSPECTION

I, the undersigned, holding a valid commission issued by the National Board of Boiler and Pressure Vessel Inspectors and the State of Washington ***and employed by*** Hartford Steam Boiler Of Connecticut of Hartford, Connecticut ***have inspected the components described in this Owner's Report during the period*** 5/11/2009 ***to*** 7/17/2009 ***and state to the best of my knowledge and belief, the Owner has performed examinations and taken corrective measures described in this Owner's Report in accordance with the requirements of the ASME Code, Section XI.***
By signing this certificate neither the Inspector nor his employer makes any warranty, expressed or implied, concerning the examinations and corrective measures described in this Owner's Report. Furthermore, neither the Inspector nor his employer shall be liable in any manner for any personal injury or property damage or a loss of any kind arising from or connected with this inspection.

Inspector's Signature

Commissions 13172 WANI
National Board, State, and Endorsements

Date 7/17/2009

WO7 NO - 0443009-01

FORM NF-1 NPT CERTIFICATE HOLDERS' DATA REPORT FOR COMPONENT SUPPORTS*

As Required by the Provisions of the ASME Code Rules, Section III, Division 1

#10

E-WZ-210

1. Manufactured by Pacific Scientific 1346 S. State College Blvd Anaheim, CA 92803
(Name and address of NPT Certificate Holder)

2. Manufacturer for ITT Grinnell Corp. 621 Dana Street N.E. Warren, Ohio 44481
(Name and address of purchaser or owner)

3. Location of Installation Unknown

4. Identification

	(a) Component Support I.D. No.	(b) Canadian Registration No.	(c) Applicable Drawings with Last Rev. & Date	(d) Stress Report or Load Capacity Data Sheet	(e) Type of Component Support	(f) Class	(g) Nat'l Board No.	(h) Year Built
(1)	7082-7137	None	1801103-07-H	DR-1352-Rev. B	Linear	1	None	1980
(2)								
(3)								
(4)								
(5)								
(6)	MSRV-3C-2, S/N 710B							
(7)								
(8)								
(9)								
(10)								

5. Remarks: 7/9/09.

CERTIFICATE OF COMPLIANCE

We certify that the statements made in this report are correct and that these components supports conform to the rules of construction of the ASME Code for Nuclear Power Plant Components, Section III, Division 1, Edition 1977, Addenda Winter '77 (Date), Code Case No. 1644-7

Date 22 April 1980 Signed Pacific Scientific (NPT Certificate Holder) by Bill Jenkins

Our ASME Certificate of Authorization No. 1198 to use the Component Supports (NPT)

Symbol expires Aug. 4, 1981 (Date).

CERTIFICATION OF DESIGN

Design Information on File at Pacific Scientific

Stress Report or Load Capacity Data Sheets on File at:
Pacific Scientific
Filed Per NA 3256

Design Specifications Certified by (1) Leo E. Ay PE State California

Reg. No. 13533.

Stress Analysis Report or Load Capacity Data Sheets Certified by (1) Leo E. Ay

PE State California Reg. No. 13533.

(1) List name only, signature not required.

REVIEWED BY 6-4-82 JAB EBASCO ENGINEERING
REVIEW VERIFIED BY J. A. Bergel EBASCO QA REP.

*Supplemental sheets in form of lists, sketches or drawings may be used provided (1) size is 8½ in., (2) information in items 1, 2, 4c, 4g on this Data Report is included on each sheet, and (3) each sheet is numbered and number of sheets is recorded at top of this form.

FORM NF-1 (Back)

CERTIFICATE OF SHOP INSPECTION

I, the undersigned, holding a valid commission issued by the National Board of Boiler and Pressure Vessel Inspectors and the State or Province of California and employed by HSBI&I Co. of Hartford, CT have inspected the component supports described in this Data Report on 4/23/80, 19 ___ and state that to the best of my knowledge and belief the NPT Certificate Holder has constructed these component supports in accordance with the ASME Code for Nuclear Power Plant Components.

By signing this certificate, neither the Inspector nor his employer makes any warranty, expressed or implied, concerning the component supports described in this Data Report. Furthermore, neither the Inspector nor his employer shall be liable in any manner for any personal injury or property damage or a loss of any kind arising from or connected with this inspection.

Date 4/23/80.

Signed William Meyer Commissions Ca. #1494
(Nat'l Bd., State, Prov., and No.)

CERTIFICATION OF FIELD INSPECTION

I, the undersigned, holding a valid commission issued by the National Board of Boiler and Pressure Vessel Inspectors and the State or Province of ___ and employed by ___ of ___ have compared the statements in this Data Report with the described component supports and state that the parts referred to as data items ___, not included in the certificate of shop inspection, have be inspected by me and that to the best of my knowledge and belief the NPT Certificate Holder has constructed these component supports in acco ance with the ASME Code for Nuclear Power Plant Components.

By signing this certificate neither the Inspector nor his employer makes any warranty, expressed or implied, concerning the component supports described in this Data Report. Furthermore, neither the inspector nor his employer shall be liable in any manner for any personal injury or property damage or a loss of any kind arising from or connected with this inspection.

Date ___.

Signed ___ Commissions ___
(Nat'l Bd., State, Prov., and No.)

WOT No 01142084 01

ENERGY NORTHWEST
People·Vision·Solutions

FORM NIS-2 OWNER'S REPORT FOR REPAIR/REPLACEMENT ACTIVITY
As Required By The Provisions Of The ASME Code Section XI

Date: 07/09/2009
Sheet: 1 Of 1
Unit: Not Applicable

1. Owner: Energy Northwest
Address: Columbia Generating Station, North Power Plant Loop, Richland, Washington, 99352
2. Plant: Columbia Generating Station
Address: Columbia Generating Station, North Power Plant Loop, Richland, Washington, 99352
3. (a) Work Performed By: Energy Northwest
(b) Repair/Replacement Organization P.O. No, Job No, etc.: Energy Northwest
(c) Type Code Symbol Stamp: Not Applicable
(d) Certificate Of Authorization No.: Not Applicable
(e) Expiration Date: Not Applicable
4. Identification Of System: Main Steam (MS) System
5. (a) Applicable Construction Code: ASME Section III, Code Class 3, 1971 Edition with Winter 1973 Addenda, Code Case: Note 1
(b) Applicable Edition Of ASME Section XI Used For Repair/Replacement Activity: 2001 Edition with 2003 Addenda
(c) Applicable ASME Section XI Case(s): None
6. Identification Of Components

Name Of Component	Name Of Manufacturer	Manufacturer's Serial No	National Board No	Other I.D.	Year Built	Corrected, Removed Or Installed	ASME Code Stamped (Yes Or No) Code Class
MS(18)-2-2	WPPSS*	MS(18)-2-2-P1	N/A	N/A	1983	See Item 7 Below	Yes, Code Class 3
MSRV-2A-2	Pacific Scientific	702	N/A	PSA-10	1977	Removed	Yes, Code Class 1
MSRV-2A-2	Pacific Scientific	8824	N/A	PSA-10	1981	Installed	Yes, Code Class 1

7. Description Of Work Performed: Replaced existing snubber for pipe support MSRV-2A-2. The replacement work was performed as follows:

1) Removed existing snubber Serial No 702.
2) Installed pretested replacement snubber Serial No 8824.
3) Torqued the fasteners to the required torque value.
4) Performed visual examination on the installed replacement snubber. Visual examination results acceptable.

NOTES

1) The applicable ASME Code Cases, if any are listed on the ASME Code Data Reports.
2) * Company name changed from Washington Public Power Supply System (WPPSS) to Energy Northwest (EN) in 1999.
3) The existing ASME Code Stamped piping system in which the replacement snubber was installed is Main Steam (MS) piping system MS(18)-2-2-P1. This piping system is certified to comply with ASME Section III, Code Class 3, 1971 Edition with Winter 1973 Addenda requirements.
4) The replacement snubber Serial No 8824 is certified to comply with ASME Section III, Code Class NF(1), 1977 Edition with Winter 1977 Addenda requirements.
5) ASME Section III, Code Class NF(1) replacement snubber for ASME Section III, Code Class NF(3) application.

PLAN No 01142084 01

ENERGY NORTHWEST
People · Vision · Solutions

FORM NIS-2 OWNER'S REPORT FOR REPAIR/REPLACEMENT ACTIVITY (Back)

8 Tests Conducted: Hydrostatic [ ] **Pneumatic** [ ] **Nominal Operating Pressure** [ ] **Other** [ ]
Exempt [X] **Test Pressure:** Psig **Test Temperature:** °F

9. Remarks (Applicable Manufacturer's Data Reports to be attached): See attached NF-1 Code Data Report for the replacement snubber Serial No 8824.

CERTIFICATE OF COMPLIANCE

I certify that the statements made in this Owner's Report are correct and that this conforms to the requirements of the ASME Code, Section XI.
Type Code Symbol Stamp: Not Applicable
Certificate Of Authorization No.: Not Applicable
Expiration Date: Not Applicable

Prepared By Kuldip Singh - Program Lead Engineer (PLE) ***Signed By*** Kuldip Singh - Program Lead Engineer (PLE)

Date 7/9/09 ***Date*** 7/9/09

CERTIFICATE OF INSERVICE INSPECTION

I, the undersigned, holding a valid commission issued by the National Board of Boiler and Pressure Vessel Inspectors and the State of Washington ***and employed by*** Hartford Steam Boiler Of Connecticut of Hartford, Connecticut ***have inspected the components described in this Owner's Report during the period*** 5/11/2009 ***to*** 7/17/2009 ***and state to the best of my knowledge and belief, the Owner has performed examinations and taken corrective measures described in this Owner's Report in accordance with the requirements of the ASME Code, Section XI.***
By signing this certificate neither the Inspector nor his employer makes any warranty, expressed or implied, concerning the examinations and corrective measures described in this Owner's Report. Furthermore, neither the Inspector nor his employer shall be liable in any manner for any personal injury or property damage or a loss of any kind arising from or connected with this inspection.

Inspector's Signature ***Commissions*** 13172 WANI
National Board, State, and Endorsements

Date 7/17/2009

WOT No. 01142084.01

FORM NF-1 NPT CERTIFICATE HOLDERS' DATA REPORT FOR COMPONENT SUPPORTS*

As Required by the Provisions of the ASME Code Rules, Section III, Division 1 #10

1. Manufactured by Pacific Scientific 1346 S. State College Blvd. Anaheim, Ca. 92803
(Name and address of NPT Certificate Holder)

2. Manufacturer for ITT Grinnell Corporation 621 Dana Street N.E. Warren, Ohio 44481
(Name and address of purchaser or owner) E-WZ-274

3. Location of Installation Unknown

4. Identification

	(a) Component Support I.D. No.	(b) Canadian Registration No.	(c) Applicable Drawings with Last Rev. & Date	(d) Stress Report or Load Capacity Data Sheet	(e) Type of Component Support	(f) Class	(g) Nat'l Board No.	(h) Year Built
(1)	8761-8860	None	1801103-07-H	DR-1352-Rev. B	Linear	1	None	1981
(2)								
(3)								
(4)								
(5)	MSRV-2A-2, S/N 8824							
(6)								
(7)								
(8)								
(9)								
(10)								

5. Remarks: 7/9/09

CERTIFICATE OF COMPLIANCE

We certify that the statements made in this report are correct and that these components supports conform to the rules of construction of the ASME Code for Nuclear Power Plant Components, Section III, Division 1, Edition 1977, Addenda Winter '77 (Date), Code Case No. 1644-7

Date 3/20/81 Signed Pacific Scientific (NPT Certificate Holder) by [signature]

Our ASME Certificate of Authorization No. 1198 to use the Component Supports (NPT)

Symbol expires Aug. 4, 1981 (Date).

CERTIFICATION OF DESIGN

Design Information on File at Pacific Scientific

Stress Report or Load Capacity Data Sheets on File at:
Pacific Scientific
Filed Per NA 3256

Design Specifications Certified by (1) Leo E. Ay PE State California

Reg. No. 13533.

Stress Analysis Report or Load Capacity Data Sheets Certified by (1) Leo E. Ay

PE State California Reg. No. 13533.

(1) name only, signature not required.

Oct 8-1982

*Supplemental sheets in form of lists, sketches or drawings may be used provided (1) size is 8½ in., (2) information in items 1, 2,

CERTIFICATE OF SHOP INSPECTION

I, the undersigned, holding a valid commission issued by the National Board of Boiler and Pressure Vessel Inspectors and the Province of California and employed by HSBI&I Co. of Hartford, CT have inspected the component supports described in this Data Report on 3/20 1981 and state that to the best of my knowledge and belief the NPT Certificate Holder has constructed these component supports in accordance with the ASME Code for Nuclear Power Plant Components.

By signing this certificate, neither the Inspector nor his employer makes any warranty, expressed or implied, concerning the component supports described in this Data Report. Furthermore, neither the Inspector nor his employer shall be liable in any manner for any personal injury or property damage or a loss of any kind arising from or connected with this inspection.

Date 3/20/81

Signed William Meyer Commissions Ca #1494
(Nat'l Bd., State, Prov., and No.)

CERTIFICATION OF FIELD INSPECTION

I, the undersigned, holding a valid commission issued by the National Board of Boiler and Pressure Vessel Inspectors and the State or Province of _____ and employed by _____ of _____ have compared the statements in this Data Report with the described component supports and state that the parts referred to as data items _____, not included in the certificate of shop inspection, have been inspected by me and that to the best of my knowledge and belief the NPT Certificate Holder has constructed these component supports in accordance with the ASME Code for Nuclear Power Plant Components.

By signing this certificate neither the Inspector nor his employer makes any warranty, expressed or implied, concerning the component supports described in this Data Report. Furthermore, neither the inspector nor his employer shall be liable in any manner for any personal injury or property damage or a loss of any kind arising from or connected with this inspection.

Date _____.

Signed _____ Commissions _____
(Nat'l Bd., State, Prov., and No.)

WOT No 01142084 01

ENERGY NORTHWEST
People·Vision·Solutions

FORM NIS-2 OWNER'S REPORT FOR REPAIR/REPLACEMENT ACTIVITY
As Required By The Provisions Of The ASME Code Section XI

Date: 07/09/2009
Sheet: 1 Of 1
Unit: Not Applicable

1. Owner: Energy Northwest
Address: Columbia Generating Station, North Power Plant Loop, Richland, Washington, 99352
2. Plant: Columbia Generating Station
Address: Columbia Generating Station, North Power Plant Loop, Richland, Washington, 99352
3. (a) Work Performed By: Energy Northwest
(b) Repair/Replacement Organization P.O. No, Job No, etc.: Energy Northwest
(c) Type Code Symbol Stamp: Not Applicable
(d) Certificate Of Authorization No.: Not Applicable
(e) Expiration Date: Not Applicable
4. Identification Of System: Main Steam (MS) System
5. (a) Applicable Construction Code: ASME Section III, Code Class 2, 1971 Edition with Winter 1973 Addenda, Code Case: Note 1
(b) Applicable Edition Of ASME Section XI Used For Repair/Replacement Activity: 2001 Edition with 2003 Addenda
(c) Applicable ASME Section XI Case(s): None
6. Identification Of Components

Name Of Component	Name Of Manufacturer	Manufacturer's Serial No	National Board No	Other I.D.	Year Built	Corrected, Removed Or Installed	ASME Code Stamped (Yes Or No) Code Class
MS(1)-4B	WPPSS*	MS(1)-4B-P1	N/A	N/A	1983	See Item 7 Below	Yes, Code Class 2
MS-167(B)	Pacific Scientific	9963	N/A	PSA-10	1981	Removed	No, Code Class 1
MS-167(B)	Pacific Scientific	10866	N/A	PSA-10	1981	Installed	Yes, Code Class 1

7. Description Of Work Performed: Replaced existing snubber for pipe support MS-167(B). The replacement work was performed as follows:

1) Removed existing snubber Serial No 9963.
2) Installed pretested replacement snubber Serial No 10866.
3) Torqued the fasteners to the required torque value.
4) Performed visual examination on the installed replacement snubber. Visual examination results acceptable.

NOTES -

1) The applicable ASME Code Cases, if any are listed on the ASME Code Data Reports.
2) * Company name changed from Washington Public Power Supply System (WPPSS) to Energy Northwest (EN) in 1999.
3) The existing ASME Code Stamped piping system in which the replacement snubber was installed is Main Steam (MS) piping system MS(1)-4B-P1. This piping system is certified to comply with ASME Section III, Code Class 2, 1971 Edition with Winter 1973 Addenda requirements.
4) The replacement snubber Serial No 10866 is certified to comply with ASME Section III, Code Class NF(1), 1977 Edition with Winter 1977 Addenda requirements.
5) ASME Section III, Code Class NF(1) replacement snubber for ASME Section III, Code Class NF(2) application.
6) (B) = Bottom.

PLAN No 01142084 01

ENERGY NORTHWEST
People · Vision · Solutions

FORM NIS-2 OWNER'S REPORT FOR REPAIR/REPLACEMENT ACTIVITY (Back)

8 Tests Conducted: Hydrostatic [ ] **Pneumatic** [ ] **Nominal Operating Pressure** [ ] **Other** [ ]
Exempt [X] **Test Pressure:** Psig **Test Temperature:** °F

9. Remarks (Applicable Manufacturer's Data Reports to be attached): See attached NF-1 Code Data Report for the replacement snubber Serial No 10866.

CERTIFICATE OF COMPLIANCE

I certify that the statements made in this Owner's Report are correct and that this conforms to the requirements of the ASME Code, Section XI.
Type Code Symbol Stamp: Not Applicable
Certificate Of Authorization No.: Not Applicable
Expiration Date: Not Applicable

Prepared By Kuldip Singh - Program Lead Engineer (PLE) **Signed By** Kuldip Singh - Program Lead Engineer (PLE)

Date 7/9/09 **Date** 7/9/09.

CERTIFICATE OF INSERVICE INSPECTION

I, the undersigned, holding a valid commission issued by the National Board of Boiler and Pressure Vessel Inspectors and the State of Washington ***and employed by*** Hartford Steam Boiler Of Connecticut of Hartford, Connecticut ***have inspected the components described in this Owner's Report during the period*** 5/11/2009 ***to*** 7/17/2009 ***and state to the best of my knowledge and belief, the Owner has performed examinations and taken corrective measures described in this Owner's Report in accordance with the requirements of the ASME Code, Section XI.***
By signing this certificate neither the Inspector nor his employer makes any warranty, expressed or implied, concerning the examinations and corrective measures described in this Owner's Report. Furthermore, neither the Inspector nor his employer shall be liable in any manner for any personal injury or property damage or a loss of any kind arising from or connected with this inspection.

Inspector's Signature **Commissions** 13172 WANI
National Board, State, and Endorsements

Date 7/17/2009

WOT No. 01142084 01

FORM NF-1 NPT CERTIFICATE HOLDERS' DATA REPORT FOR COMPONENT SUPPORTS*

As Required by the Provisions of the ASME Code Rules, Section III, Division 1

10

E-WZ-038

1. Manufactured by Pacific Scientific 1346 S. STate College Blvd. Anaheim, Ca. 92803
(Name and address of NPT Certificate Holder)

2. Manufactured for ITT Grinnell Corporation 621 Dana STreet N.E. Warren, Ohio 44481
(Name and address of purchaser or owner)

3. Location of Installation Unknown

4. Identification

	(a) Component Support I.D. No.	(b) Canadian Registration No.	(c) Applicable Drawings with Last Rev. & Date	(d) Stress Report or Load Capacity Data Sheet	(e) Type of Component Support	(f) Class	(g) Nat'l Board No.	(h) Year Built
(1)	10856-10888	None	1801103-07-H	DR-1416-Rev.0	Linear	1	None	1981
(2)	10889-10933	"	"	"	"		"	"
(3)								
(4)								
(5)	MS-167, S/N 10866							
(6)								
(7)								
(8)								
(9)								
(10)								

5. Remarks: 7/9/09.

CERTIFICATE OF COMPLIANCE

I certify that the statements made in this report are correct and that these components supports conform to the rules of construction of the ASME Code for Nuclear Power Plant Components, Section III, Division 1, Edition 1977, Addenda Winter '77 (Date), Code Case No. 1644-7

Date July 23, 1981 Signed Pacific Scientific (NPT Certificate Holder) by Ricardo A. Nava

Our ASME Certificate of Authorization No. 1198 to use the Component Support (NPT)

Symbol expires Aug. 4, 1981 (Date).

CERTIFICATION OF DESIGN

Design Information on File at Pacific Scientific

Stress Report or Load Capacity Data Sheets on File at:
Pacific Scientific
Filed Per NA 3256

Design Specifications Certified by (1) Leo E. Ay PE State California

Reg. No. 13533

Stress Analysis Report or Load Capacity Data Sheets Certified by (1) Leo E. Ay

PE State California Reg. No. 13533

(1) List name only, signature not required.

EBASCO VQA REP.

*Supplemental sheets in form of lists, sketches or drawings may be used provided (1) size is 8½ in., (2) information in items 1, 2, 4c, 4g on this Data Report is included on each sheet, and (3) each sheet is numbered and number of sheets is recorded at top of this form.

FORM NF-1 (Back)

CERTIFICATE OF SHOP INSPECTION

I, the undersigned, holding a valid commission issued by the National Board of Boiler and Pressure Vessel Inspectors and the State or Province of California and employed by HSBI&I Co. of Hartford, CT have inspected the component supports described in this Data Report on 7-24-, 1981 and state that to the best of my knowledge and belief the NPT Certificate Holder has constructed these component supports in accordance with the ASME Code for Nuclear Power Plant Components.

By signing this certificate, neither the Inspector nor his employer makes any warranty, expressed or implied, concerning the component supports described in this Data Report. Furthermore, neither the Inspector nor his employer shall be liable in any manner for any personal injury or property damage or a loss of any kind arising from or connected with this inspection.

Date 7-24-81

Signed [signature] Commissions Ca 1445
(Nat'l Bd., State, Prov., and No.)

CERTIFICATION OF FIELD INSPECTION

I, the undersigned, holding a valid commission issued by the National Board of Boiler and Pressure Vessel Inspectors and the State or Province of _____ and employed by _____ of _____ have compared the statements in this Data Report with the described component supports and state that the parts referred to as data items _____, not included in the certificate of shop inspection, have been inspected by me and that to the best of my knowledge and belief the NPT Certificate Holder has constructed these component supports in accordance with the ASME Code for Nuclear Power Plant Components.

By signing this certificate neither the Inspector nor his employer makes any warranty, expressed or implied, concerning the component supports described in this Data Report. Furthermore, neither the inspector nor his employer shall be liable in any manner for any personal injury or property damage or a loss of any kind arising from or connected with this inspection.

Date _____

Signed _____ Commissions _____
(Nat'l Bd., State, Prov., and No.)

WOT No 01142084 01

ENERGY NORTHWEST
People · Vision · Solutions

FORM NIS-2 OWNER'S REPORT FOR REPAIR/REPLACEMENT ACTIVITY
As Required By The Provisions Of The ASME Code Section XI

Date: 07/09/2009
Sheet: 1 Of 1
Unit: Not Applicable

1. Owner: Energy Northwest
Address: Columbia Generating Station, North Power Plant Loop, Richland, Washington, 99352
2. Plant: Columbia Generating Station
Address: Columbia Generating Station, North Power Plant Loop, Richland, Washington, 99352
3. (a) Work Performed By: Energy Northwest
(b) Repair/Replacement Organization P.O. No, Job No, etc.: Energy Northwest
(c) Type Code Symbol Stamp: Not Applicable
(d) Certificate Of Authorization No.: Not Applicable
(e) Expiration Date: Not Applicable
4. Identification Of System: Main Steam (MS) System
5. (a) Applicable Construction Code: ASME Section III, Code Class 2, 1971 Edition with Winter 1973 Addenda, Code Case: Note 1
(b) Applicable Edition Of ASME Section XI Used For Repair/Replacement Activity: 2001 Edition with 2003 Addenda
(c) Applicable ASME Section XI Case(s): None
6. Identification Of Components

Name Of Component	Name Of Manufacturer	Manufacturer's Serial No	National Board No	Other I.D.	Year Built	Corrected, Removed Or Installed	ASME Code Stamped (Yes Or No) Code Class
MS(1)-4C	WPPSS*	MS(1)-4C-P1	N/A	N/A	1983	See Item 7 Below	Yes, Code Class 2
MS-1002N(N)	Pacific Scientific	9908	N/A	PSA-10	1981	Removed	No, Code Class 1
MS-1002N(N)	Pacific Scientific	9859	N/A	PSA-10	1981	Installed	Yes, Code Class 1

7. Description Of Work Performed: Replaced existing snubber for pipe support MS-1002N(N). The replacement work was performed as follows:

1) Removed existing snubber Serial No 9908.
2) Installed pretested replacement snubber Serial No 9859.
3) Torqued the fasteners to the required torque value.
4) Performed visual examination on the installed replacement snubber. Visual examination results acceptable.

NOTES -

1) The applicable ASME Code Cases, if any are listed on the ASME Code Data Reports.
2) * Company name changed from Washington Public Power Supply System (WPPSS) to Energy Northwest (EN) in 1999.
3) The existing ASME Code Stamped piping system in which the replacement snubber was installed is Main Steam (MS) piping system MS(1)-4C-P1. This piping system is certified to comply with ASME Section III, Code Class 2, 1971 Edition with Winter 1973 Addenda requirements.
4) The replacement snubber Serial No 9859 is certified to comply with ASME Section III, Code Class NF(1), 1977 Edition with Winter 1977 Addenda requirements.
5) ASME Section III, Code Class NF(1) replacement snubber for ASME Section III, Code Class NF(2) application.
6) (N) = North.

PLAN No 01142084 01

ENERGY NORTHWEST
People · Vision · Solutions

FORM NIS-2 OWNER'S REPORT FOR REPAIR/REPLACEMENT ACTIVITY (Back)

8 Tests Conducted: Hydrostatic [ ] **Pneumatic** [ ] **Nominal Operating Pressure** [ ] **Other** [ ]
Exempt [X] **Test Pressure:** Psig **Test Temperature:** °F

9. Remarks (Applicable Manufacturer's Data Reports to be attached): See attached NF-1 Code Data Report for the replacement snubber Serial No 9859.

CERTIFICATE OF COMPLIANCE

I certify that the statements made in this Owner's Report are correct and that this conforms to the requirements of the ASME Code, Section XI.
Type Code Symbol Stamp: Not Applicable
Certificate Of Authorization No.: Not Applicable
Expiration Date: Not Applicable

Prepared By Kuldip Singh - Program Lead Engineer (PLE) ***Signed By*** Kuldip Singh - Program Lead Engineer (PLE)

Date 7/9/09 ***Date*** 7/9/09

CERTIFICATE OF INSERVICE INSPECTION

I, the undersigned, holding a valid commission issued by the National Board of Boiler and Pressure Vessel Inspectors and the State of Washington ***and employed by*** Hartford Steam Boiler Of Connecticut of Hartford, Connecticut ***have inspected the components described in this Owner's Report during the period*** 5/11/2009 ***to*** 7/17/2009 ***and state to the best of my knowledge and belief, the Owner has performed examinations and taken corrective measures described in this Owner's Report in accordance with the requirements of the ASME Code, Section XI.***
By signing this certificate neither the Inspector nor his employer makes any warranty, expressed or implied, concerning the examinations and corrective measures described in this Owner's Report. Furthermore, neither the Inspector nor his employer shall be liable in any manner for any personal injury or property damage or a loss of any kind arising from or connected with this inspection.

Inspector's Signature ***Commissions*** 13172 WANI
National Board, State, and Endorsements

Date 7/17/2009

WOT NO. 01142084 01

FORM NF-1 NPT CERTIFICATE HOLDERS' DATA REPORT FOR COMPONENT SUPPORTS*

As Required by the Provisions of the ASME Code Rules, Section III, Division 1 #70

E-WZ-767-00

1. Manufactured by Pacific Scientific 1346 S. State College Blvd Anaheim, CA 92803
(Name and address of NPT Certificate Holder)

2. Manufactured for ITT Grinnell Corp. 621 Dana Street N.E. Warren, Ohio 44481
(Name and address of purchaser or owner)

3. Location of Installation Unknown

4. Identification

(a) Component Support I.D. No.	(b) Canadian Registration No.	(c) Applicable Drawings with Last Rev. & Date	(d) Stress Report or Load Capacity Data Sheet	(e) Type of Component Support	(f) Class	(g) Nat'l Board No.	(h) Year Built
(1) 9775-9802,	None	1801103-07-H	DR-1352-Rev. B	Linear	1	None	1981
(2) 9803-9854,	"	"	"	"	"	"	"
(3) 9855-9868	"	"	"	"	"	"	"
(4)							
(5)							
(6) MS-1002 N(N), SIN 9859							
(7)							
(8)							
(9)							
(10)							

5. Remarks: 7/9/09.

REVIEWED 8-30-83 BY
TRASCO ENGINEERING
TRASCO VOA REP.

CERTIFICATE OF COMPLIANCE

We certify that the statements made in this report are correct and that these components supports conform to the rules of construction of the ASME Code for Nuclear Power Plant Components, Section III, Division 1, Edition 1977, Addenda Winter '77 (Date), Code Case No. 1644-7

Date 17 March 1981 Signed Pacific Scientific (NPT Certificate Holder) by Bill Jenkins

Our ASME Certificate of Authorization No. 1198 to use the Component Supports (NPT)

Symbol expires Aug. 4, 1981 (Date)

CERTIFICATION OF DESIGN

Design Information on File at Pacific Scientific

Stress Report or Load Capacity Data Sheets on File at:
Pacific Scientific
Filed Per NA 3256

Design Specifications Certified by (1) Leo E. Ay PE State California

Reg. No. 13533

Stress Analysis Report or Load Capacity Data Sheets Certified by (1) Leo E. Ay

PE State California Reg. No. 13533

(1) First name only, signature not required.

*Supplemental sheets in form of lists, sketches or drawings may be used provided (1) size is 8½ in., (2) information in items 1, 2, &c. 4a on this Data Report is included on each sheet, and (3) each sheet is numbered and number of sheets is recorded at top of this form.

FORM NF-1 (Back)

CERTIFICATE OF SHOP INSPECTION

I the undersigned, holding a valid commission issued by the National Board of Boiler and Pressure Vessel Inspectors and the State or Province of California and employed by HSBI&I Co. of Hartford, CT have inspected the component supports described in this Data Report on 3/17, 1981 and state that to the best of my knowledge and belief the NPT Certificate Holder has constructed these component supports in accordance with the ASME Code for Nuclear Power Plant Components.

By signing this certificate, neither the Inspector nor his employer makes any warranty, expressed or implied, concerning the component supports described in this Data Report. Furthermore, neither the Inspector nor his employer shall be liable in any manner for any personal injury or property damage or a loss of any kind arising from or connected with this inspection.

Date 3/17/81

Signed William Meyer Commissions Ca. #1494
(Nat'l Bd., State, Prov., and No.)

CERTIFICATION OF FIELD INSPECTION

I, the undersigned, holding a valid commission issued by the National Board of Boiler and Pressure Vessel Inspectors and the State or Province of _____ and employed by _____ of _____ have compared the statements in this Data Report with the described component supports and st that the parts referred to as data items _____, not included in the certificate of shop inspection, have be inspected by me and that to the best of my knowledge and belief the NPT Certificate Holder has constructed these component supports in accordance with the ASME Code for Nuclear Power Plant Components.

By signing this certificate neither the Inspector nor his employer makes any warranty, expressed or implied, concerning the component supports described in this Data Report. Furthermore, neither the inspector nor his employer shall be liable in any manner for any personal injury or property damage or a loss of any kind arising from or connected with this inspection.

Date _____

Signed _____ Commissions _____
(Nat'l Bd., State, Prov., and No.)

REVIEWED 8-30-83 BY
SEASCO ENGINEERING
REVIEW VERIFIED BY
SEASCO VQA REP.

WOT No 01142084 01

ENERGY NORTHWEST
People · Vision · Solutions

FORM NIS-2 OWNER'S REPORT FOR REPAIR/REPLACEMENT ACTIVITY
As Required By The Provisions Of The ASME Code Section XI

Date: 07/09/2009
Sheet: 1 Of 1
Unit: Not Applicable

1. **Owner:** Energy Northwest
   Address: Columbia Generating Station, North Power Plant Loop, Richland, Washington, 99352
2. **Plant:** Columbia Generating Station
   Address: Columbia Generating Station, North Power Plant Loop, Richland, Washington, 99352
3. (a) **Work Performed By:** Energy Northwest
   (b) **Repair/Replacement Organization P.O. No, Job No, etc.:** Energy Northwest
   (c) **Type Code Symbol Stamp:** Not Applicable
   (d) **Certificate Of Authorization No.:** Not Applicable
   (e) **Expiration Date:** Not Applicable
4. **Identification Of System:** Main Steam (MS) System
5. (a) **Applicable Construction Code:** ASME Section III, Code Class 2, 1971 Edition with Winter 1973 Addenda, Code Case: Note 1
   (b) **Applicable Edition Of ASME Section XI Used For Repair/Replacement Activity:** 2001 Edition with 2003 Addenda
   (c) **Applicable ASME Section XI Case(s):** None
6. **Identification Of Components**

Name Of Component	Name Of Manufacturer	Manufacturer's Serial No	National Board No	Other I.D.	Year Built	Corrected, Removed Or Installed	ASME Code Stamped (Yes Or No) Code Class
MS(1)-4D	WPPSS*	MS(1)-4D-P3	N/A	N/A	1983	See Item 7 Below	Yes, Code Class 2
MS-1010N(E)	Pacific Scientific	17372	N/A	PSA-10	1986	Removed	Yes, Code Class 1
MS-1010N(E)	Pacific Scientific	7110	N/A	PSA-10	1980	Installed	Yes, Code Class 1

7. **Description Of Work Performed:** Replaced existing snubber for pipe support MS-1010N(E). The replacement work was performed as follows:
   1) Removed existing snubber Serial No 17372.
   2) Installed pretested replacement snubber Serial No 7110.
   3) Torqued the fasteners to the required torque value.
   4) Performed visual examination on the installed replacement snubber. Visual examination results acceptable.

NOTES -
1) The applicable ASME Code Cases, if any are listed on the ASME Code Data Reports.
2) * Company name changed from Washington Public Power Supply System (WPPSS) to Energy Northwest (EN) in 1999.
3) The existing ASME Code Stamped piping system in which the replacement snubber was installed is Main Steam (MS) piping system MS(1)-4D-P3. This piping system is certified to comply with ASME Section III, Code Class 2, 1971 Edition with Winter 1973 Addenda requirements.
4) The replacement snubber Serial No 7110 is certified to comply with ASME Section III, Code Class NF(1), 1977 Edition with Winter 1977 Addenda requirements.
5) ASME Section III, Code Class NF(1) replacement snubber for ASME Section III, Code Class NF(2) application.
6) (E) = East.

PLAN No 01142084 01

ENERGY NORTHWEST
People · Vision · Solutions

FORM NIS-2 OWNER'S REPORT FOR REPAIR/REPLACEMENT ACTIVITY (Back)

8 Tests Conducted: Hydrostatic [ ] **Pneumatic** [ ] **Nominal Operating Pressure** [ ] **Other** [ ]
Exempt [X] **Test Pressure:** Psig **Test Temperature:** °F

9. Remarks (Applicable Manufacturer's Data Reports to be attached): See attached NF-1 Code Data Report for the replacement snubber Serial No 7110.

CERTIFICATE OF COMPLIANCE

I certify that the statements made in this Owner's Report are correct and that this conforms to the requirements of the ASME Code, Section XI.
Type Code Symbol Stamp: Not Applicable
Certificate Of Authorization No.: Not Applicable
Expiration Date: Not Applicable

Prepared By Kuldip Singh - Program Lead Engineer (PLE) ***Signed By*** Kuldip Singh - Program Lead Engineer (PLE)

Date 7/9/09 ***Date*** 7/9/09.

CERTIFICATE OF INSERVICE INSPECTION

I, the undersigned, holding a valid commission issued by the National Board of Boiler and Pressure Vessel Inspectors and the State of Washington ***and employed by*** Hartford Steam Boiler Of Connecticut of Hartford, Connecticut ***have inspected the components described in this Owner's Report during the period*** 5/11/2009 ***to*** 7/17/2009 ***and state to the best of my knowledge and belief, the Owner has performed examinations and taken corrective measures described in this Owner's Report in accordance with the requirements of the ASME Code, Section XI.***
By signing this certificate neither the Inspector nor his employer makes any warranty, expressed or implied, concerning the examinations and corrective measures described in this Owner's Report. Furthermore, neither the Inspector nor his employer shall be liable in any manner for any personal injury or property damage or a loss of any kind arising from or connected with this inspection.

Inspector's Signature ***Commissions*** 13172 WANI
National Board, State, and Endorsements

Date 7/17/2009

WO1-MO-014420-84-8

FORM NF-1 NPT CERTIFICATE HOLDERS' DATA REPORT FOR COMPONENT SUPPORTS*

As Required by the Provisions of the ASME Code Rules, Section III, Division 1

#10

E-WZ-210

1. Manufactured by Pacific Scientific 1346 S. State College Blvd Anaheim, CA. 92803
(Name and address of NPT Certificate Holder)

2. Manufacturer for ITT Grinnell Corp. 621 Dana Street N.E. Warren, Ohio 44481
(Name and address of purchaser or owner)

3. Location of Installation Unknown

4. Identification

	(a) Component Support I.D. No.	(b) Canadian Registration No.	(c) Applicable Drawings with Last Rev. & Date	(d) Stress Report or Load Capacity Data Sheet	(e) Type of Component Support	(f) Class	(g) Nat'l Board No.	(h) Year Built
(1)	7082-7137	None	1801103-07-H	DR-1352-Rev. B	Linear	1	None	1980
(2)								
(3)								
(4)								
(5)	MS-1010 N (E), S/N 7110							
(6)								
(7)								
(8)								
(9)								
(10)								

5. Remarks: 7/9/05.

CERTIFICATE OF COMPLIANCE

We certify that the statements made in this report are correct and that these components supports conform to the rules of construction of the ASME Code for Nuclear Power Plant Components, Section III, Division 1, Edition 1977, Addenda Winter '77 (Date), Code Case No. 1644-7

Date 22 April 1980 Signed Pacific Scientific (NPT Certificate Holder) by Bill Jerkins

Our ASME Certificate of Authorization No. 1198 to use the Component Supports (NPT)

Symbol expires Aug. 4, 1981 (Date).

CERTIFICATION OF DESIGN

Design Information on File at Pacific Scientific

Stress Report or Load Capacity Data Sheets on File at:
Pacific Scientific
Filed Per NA 3256

Design Specifications Certified by (1) Leo E. Ay PE State California

Reg. No. 13533.

Stress Analysis Report or Load Capacity Data Sheets Certified by (1) Leo E. Ay

PE State California Reg. No. 13533.

(1) List name only, signature not required.

REVIEWED BY 6-4-82 JAB
EBASCO ENGINEERING
REVIEW VERIFIED BY
EBASCO QA REP.

*Supplemental sheets in form of lists, sketches or drawings may be used provided (1) size is 8½ in., (2) information in items 1, 2, 4c, 4g on this Data Report is included on each sheet, and (3) each sheet is numbered and number of sheets is recorded at top of this form.

FORM NF-1 (Back)

CERTIFICATE OF SHOP INSPECTION

I, the undersigned, holding a valid commission issued by the National Board of Boiler and Pressure Vessel Inspectors and the State or Province of California and employed by HSBI&I Co. of Hartford, CT have inspected the component supports described in this Data Report on 4/23/80, 19 ___ and state that to the best of my knowledge and belief the NPT Certificate Holder has constructed these component supports in accordance with the ASME Code for Nuclear Power Plant Components.

By signing this certificate, neither the Inspector nor his employer makes any warranty, expressed or implied, concerning the component supports described in this Data Report. Furthermore, neither the Inspector nor his employer shall be liable in any manner for any personal injury or property damage or a loss of any kind arising from or connected with this inspection.

Date 4/23/80.

Signed William Meyer Commissions Ca. #1494
(Nat'l Bd., State, Prov., and No.)

CERTIFICATION OF FIELD INSPECTION

I, the undersigned, holding a valid commission issued by the National Board of Boiler and Pressure Vessel Inspectors and the State or Province of ___ and employed by ___ of ___ have compared the statements in this Data Report with the described component supports and state that the parts referred to as data items ___, not included in the certificate of shop inspection, have be inspected by me and that to the best of my knowledge and belief the NPT Certificate Holder has constructed these component supports in acco ance with the ASME Code for Nuclear Power Plant Components.

By signing this certificate neither the Inspector nor his employer makes any warranty, expressed or implied, concerning the component supports described in this Data Report. Furthermore, neither the inspector nor his employer shall be liable in any manner for any personal injury or property damage or a loss of any kind arising from or connected with this inspection.

Date ___.

Signed ___ Commissions ___
(Nat'l Bd., State, Prov., and No.)

WOT No 01142084 01

ENERGY NORTHWEST
People·Vision·Solutions

FORM NIS-2 OWNER'S REPORT FOR REPAIR/REPLACEMENT ACTIVITY
As Required By The Provisions Of The ASME Code Section XI

Date: 07/09/2009
Sheet: 1 Of 1
Unit: Not Applicable

1. Owner: Energy Northwest
Address: Columbia Generating Station, North Power Plant Loop, Richland, Washington, 99352
2. Plant: Columbia Generating Station
Address: Columbia Generating Station, North Power Plant Loop, Richland, Washington, 99352
3. (a) Work Performed By: Energy Northwest
(b) Repair/Replacement Organization P.O. No, Job No, etc.: Energy Northwest
(c) Type Code Symbol Stamp: Not Applicable
(d) Certificate Of Authorization No.: Not Applicable
(e) Expiration Date: Not Applicable
4. Identification Of System: Main Steam (MS) System
5. (a) Applicable Construction Code: ASME Section III, Code Class 2, 1971 Edition with Winter 1973 Addenda, Code Case: Note 1
(b) Applicable Edition Of ASME Section XI Used For Repair/Replacement Activity: 2001 Edition with 2003 Addenda
(c) Applicable ASME Section XI Case(s): None
6. Identification Of Components

Name Of Component	Name Of Manufacturer	Manufacturer's Serial No	National Board No	Other I.D.	Year Built	Corrected, Removed Or Installed	ASME Code Stamped (Yes Or No) Code Class
MS(1)-4C	WPPSS*	MS(1)-4C-P1	N/A	N/A	1983	See Item 7 Below	Yes, Code Class 2
MS-48	Pacific Scientific	10605	N/A	PSA-3	1980	Removed	Yes, Code Class 1
MS-48	Pacific Scientific	9888	N/A	PSA-3	1979	Installed	Yes, Code Class 1

7. Description Of Work Performed: Replaced existing snubber for pipe support MS-48. The replacement work was performed as follows:

1) Removed existing snubber Serial No 10605.
2) Installed pretested replacement snubber Serial No 9888.
3) Torqued the fasteners to the required torque value.
4) Performed visual examination on the installed replacement snubber. Visual examination results acceptable.

NOTES -

1) The applicable ASME Code Cases, if any are listed on the ASME Code Data Reports.
2) * Company name changed from Washington Public Power Supply System (WPPSS) to Energy Northwest (EN) in 1999.
3) The existing ASME Code Stamped piping system in which the replacement snubber was installed is Main Steam (MS) piping system MS(1)-4C-P1. This piping system is certified to comply with ASME Section III, Code Class 2, 1971 Edition with Winter 1973 Addenda requirements.
4) The replacement snubber Serial No 9888 is certified to comply with ASME Section III, Code Class NF(1), 1977 Edition with Winter 1976 Addenda requirements.
5) ASME Section III, Code Class NF(1) replacement snubber for ASME Section III, Code Class NF(2) application.

PLAN No 01142084 01

ENERGY NORTHWEST
People · Vision · Solutions

FORM NIS-2 OWNER'S REPORT FOR REPAIR/REPLACEMENT ACTIVITY (Back)

8 Tests Conducted: Hydrostatic [ ] Pneumatic [ ] Nominal Operating Pressure [ ] Other [ ]
Exempt [X] Test Pressure: Psig Test Temperature: °F

9. Remarks (Applicable Manufacturer's Data Reports to be attached): See attached NF-1 Code Data Report for the replacement snubber Serial No 9888.

CERTIFICATE OF COMPLIANCE

I certify that the statements made in this Owner's Report are correct and that this conforms to the requirements of the ASME Code, Section XI.
Type Code Symbol Stamp: Not Applicable
Certificate Of Authorization No.: Not Applicable
Expiration Date: Not Applicable

Prepared By Kuldip Singh
Kuldip Singh - ~~Program~~ Lead Engineer (PLE)
Date 7/9/09

Signed By Kuldip Singh
Kuldip Singh - ~~Program~~ Lead Engineer (PLE)
Date 7/9/09

CERTIFICATE OF INSERVICE INSPECTION

I, the undersigned, holding a valid commission issued by the National Board of Boiler and Pressure Vessel Inspectors and the State of Washington *and employed by* Hartford Steam Boiler Of Connecticut of Hartford, Connecticut *have inspected the components described in this Owner's Report during the period* 5/11/2009 *to* 7/17/2009 *and state to the best of my knowledge and belief, the Owner has performed examinations and taken corrective measures described in this Owner's Report in accordance with the requirements of the ASME Code, Section XI.*
By signing this certificate neither the Inspector nor his employer makes any warranty, expressed or implied, concerning the examinations and corrective measures described in this Owner's Report. Furthermore, neither the Inspector nor his employer shall be liable in any manner for any personal injury or property damage or a loss of any kind arising from or connected with this inspection.

Inspector's Signature

Commissions 13172 WANI
National Board, State, and Endorsements

Date 7/17/2009

WOT No. 01142084 01

#3

FORM NF-1 NPT CERTIFICATE HOLDERS' DATA REPORT FOR COMPONENT SUPPORTS*

As Required by the Provisions of the ASME Code Rules, Section III, Division 1 E-WY-526

1. Manufactured by Pacific Scientific 1346 S. State College Blvd. Anaheim, Ca. 92
(Name and address of NPT Certificate Holder)

2. Manufacturer for ITT Grinnell Corp. 621 Dana Street N.E. Warren, Ohio 44481
(Name and address of purchaser or owner)

3. Location of Installation Unknown

4. Identification

	(a) Component Support I.D. No.	(b) Canadian Registration No.	(c) Applicable Drawings with Last Rev. & Date	(d) Stress Report or Load Capacity Data Sheet	(e) Type of Component Support	(f) Class	(g) Nat'l Board No.	(h) Year Built
(1)	9867-9910	None	1801106-05-H	DR-1350-Rev. B	Linear	1	None	1979
(2)								
(3)								
(4)								
(5)								
(6)			MS-48, S/N 9888					
(7)								
(8)								
(9)								
(10)								

5. Remarks: 7/9/09

CERTIFICATE OF COMPLIANCE

We certify that the statements made in this report are correct and that these components supports conform to the rules of construction of the ASME Code for Nuclear Power Plant Components, Section III, Division 1, Edition '74, Addenda Winter '76 (Date), Code Case No. 1644-5 & 1686

Date 12 December 1979 Signed Pacific Scientific (NPT Certificate Holder) by Bill Jenkins

Our ASME Certificate of Authorization No. 1198 to use the Component Supports (NPT)

Symbol expires Aug. 4, 1981 (Date).

CERTIFICATION OF DESIGN

Design Information on File at Pacific Scientific

Stress Report or Load Capacity Data Sheets on File at:
Pacific Scientific
Filed Per NA 3256

Design Specifications Certified by (1) Leo E. Ay PE State California

Reg. No. 13533.

Stress Analysis Report or Load Capacity Data Sheets Certified by (1) Leo E. Ay

PE State California Reg. No. 13533.

(1) List name only; signature not required.

REVIEWED BY
EBASCO ENGINEERING
REVIEW VERIFIED BY 12-30-8
EBASCO VQA REP.

*Supplemental sheets in form of lists, sketches or drawings may be used provided (1) size is 8½ in., (2) information in items 1, 2, 4c, 4g on this Data Report is included on each sheet, and (3) each sheet is numbered and number of sheets is recorded at top of this form.

FORM NF-1 (Back)

CERTIFICATE OF SHOP INSPECTION

I, the undersigned, holding a valid commission issued by the National Board of Boiler and Pressure Vessel Inspectors and the State or Province of New York and employed by HSBI&I Co. of Hartford, CT have inspected the component supports described in this Data Report on 12/12, 19 79 and state that to the best of my knowledge and belief the NPT Certificate Holder has constructed these component supports in accordance with the ASME Code for Nuclear Power Plant Components.

By signing this certificate, neither the Inspector nor his employer makes any warranty, expressed or implied, concerning the component supports described in this Data Report. Furthermore, neither the Inspector nor his employer shall be liable in any manner for any personal injury or property damage or a loss of any kind arising from or connected with this inspection.

Date 12/12/79.

Signed William G. Meyer Commissions N.Y. Comm & Ohio Comm
(Nat'l Bd., State, Prov., and No.)

CERTIFICATION OF FIELD INSPECTION

I, the undersigned, holding a valid commission issued by the National Board of Boiler and Pressure Vessel Inspectors and the State or Province of _____ and employed by _____ of _____ have compared the statements in this Data Report with the described component supports and state that the parts referred to as data items _____, not included in the certificate of shop inspection, have been inspected by me and that to the best of my knowledge and belief the NPT Certificate Holder has constructed these component supports in accordance with the ASME Code for Nuclear Power Plant Components.

By signing this certificate neither the Inspector nor his employer makes any warranty, expressed or implied, concerning the component supports described in this Data Report. Furthermore, neither the inspector nor his employer shall be liable in any manner for any personal injury or property damage or a loss of any kind arising from or connected with this inspection.

Date _____.

Signed _____ Commissions _____
(Nat'l Bd., State, Prov., and No.)

WOT No 01142084 01

ENERGY NORTHWEST
People · Vision · Solutions

FORM NIS-2 OWNER'S REPORT FOR REPAIR/REPLACEMENT ACTIVITY
As Required By The Provisions Of The ASME Code Section XI

Date: 07/09/2009
Sheet: 1 Of 1
Unit: Not Applicable

1. **Owner:** Energy Northwest
   Address: Columbia Generating Station, North Power Plant Loop, Richland, Washington, 99352
2. **Plant:** Columbia Generating Station
   Address: Columbia Generating Station, North Power Plant Loop, Richland, Washington, 99352
3. (a) **Work Performed By:** Energy Northwest
   (b) **Repair/Replacement Organization P.O. No, Job No, etc.:** Energy Northwest
   (c) **Type Code Symbol Stamp:** Not Applicable
   (d) **Certificate Of Authorization No.:** Not Applicable
   (e) **Expiration Date:** Not Applicable
4. **Identification Of System:** Main Steam (MS) System
5. (a) **Applicable Construction Code:** ASME Section III, Code Class 2, 1971 Edition with Winter 1973 Addenda, Code Case: Note 1
   (b) **Applicable Edition Of ASME Section XI Used For Repair/Replacement Activity:** 2001 Edition with 2003 Addenda
   (c) **Applicable ASME Section XI Case(s):** None
6. **Identification Of Components**

Name Of Component	Name Of Manufacturer	Manufacturer's Serial No	National Board No	Other I.D.	Year Built	Corrected, Removed Or Installed	ASME Code Stamped (Yes Or No) Code Class
MS(1)-4B	WPPSS*	MS(1)-4B-P1	N/A	N/A	1983	See Item 7 Below	Yes, Code Class 2
MS-167(T)	Pacific Scientific	273	N/A	PSA-10	1976	Removed	Yes, Code Class 1
MS-167(T)	Pacific Scientific	9799	N/A	PSA-10	1981	Installed	Yes, Code Class 1

7. **Description Of Work Performed:** Replaced existing snubber for pipe support MS-167(T). The replacement work was performed as follows:
   1) Removed existing snubber Serial No 273.
   2) Installed pretested replacement snubber Serial No 9799.
   3) Torqued the fasteners to the required torque value.
   4) Performed visual examination on the installed replacement snubber. Visual examination results acceptable.

NOTES -

1) The applicable ASME Code Cases, if any are listed on the ASME Code Data Reports.
2) * Company name changed from Washington Public Power Supply System (WPPSS) to Energy Northwest (EN) in 1999.
3) The existing ASME Code Stamped piping system in which the replacement snubber was installed is Main Steam (MS) piping system MS(1)-4B-P1. This piping system is certified to comply with ASME Section III, Code Class 2, 1971 Edition with Winter 1973 Addenda requirements.
4) The replacement snubber Serial No 9799 is certified to comply with ASME Section III, Code Class NF(1), 1977 Edition with Winter 1977 Addenda requirements.
5) ASME Section III, Code Class NF(1) replacement snubber for ASME Section III, Code Class NF(2) application.
6) (T) = Top.

PLAN No 01142084 01

ENERGY NORTHWEST
People · Vision · Solutions

FORM NIS-2 OWNER'S REPORT FOR REPAIR/REPLACEMENT ACTIVITY (Back)

8 Tests Conducted: Hydrostatic [ ] **Pneumatic** [ ] **Nominal Operating Pressure** [ ] **Other** [ ]
Exempt [X] **Test Pressure:** Psig **Test Temperature:** °F

9. Remarks (Applicable Manufacturer's Data Reports to be attached): See attached NF-1 Code Data Report for the replacement snubber Serial No 9799.

CERTIFICATE OF COMPLIANCE

I certify that the statements made in this Owner's Report are correct and that this conforms to the requirements of the ASME Code, Section XI.
Type Code Symbol Stamp: Not Applicable
Certificate Of Authorization No.: Not Applicable
Expiration Date: Not Applicable

Prepared By Kuldip Singh - Program Lead Engineer (PLE) ***Signed By*** Kuldip Singh - Program Lead Engineer (PLE)

Date 7/9/09 ***Date*** 7/9/09

CERTIFICATE OF INSERVICE INSPECTION

I, the undersigned, holding a valid commission issued by the National Board of Boiler and Pressure Vessel Inspectors and the State of Washington ***and employed by*** Hartford Steam Boiler Of Connecticut of Hartford, Connecticut ***have inspected the components described in this Owner's Report during the period*** 5/11/2009 ***to*** 7/17/2009 ***and state to the best of my knowledge and belief, the Owner has performed examinations and taken corrective measures described in this Owner's Report in accordance with the requirements of the ASME Code, Section XI.***
By signing this certificate neither the Inspector nor his employer makes any warranty, expressed or implied, concerning the examinations and corrective measures described in this Owner's Report. Furthermore, neither the Inspector nor his employer shall be liable in any manner for any personal injury or property damage or a loss of any kind arising from or connected with this inspection.

Inspector's Signature ***Commissions*** 13172 WANI
National Board, State, and Endorsements

Date 7/17/2009

W01 No. 01142084 01

FORM NF-1 NPT CERTIFICATE HOLDERS' DATA REPORT FOR COMPONENT SUPPORTS*

As Required by the Provisions of the ASME Code Rules, Section III, Division 1 #70

E-WZ-767-00

1. Manufactured by Pacific Scientific 1346 S. State College Blvd Anaheim, CA 92803
(Name and address of NPT Certificate Holder)

2. Manufactured for ITT Grinnell Corp. 621 Dana Street N.E. Warren, Ohio 44481
(Name and address of purchaser or owner)

3. Location of Installation Unknown

4. Identification

(a) Component Support I.D. No.	(b) Canadian Registration No.	(c) Applicable Drawings with Last Rev. & Date	(d) Stress Report or Load Capacity Data Sheet	(e) Type of Component Support	(f) Class	(g) Nat'l Board No.	(h) Year Built
(1) 9775-9802,	None	1801103-07-5	DR-1352-Rev. B	Linear	1	None	1981
(2) 9803-9854,	"	"	"	"	"	"	"
(3) 9855-9868	"	"	"	"	"	"	"
(4)							
(5)							
(6) MS-167 (T), S/N 9799							
(7)							
(8)							
(9)							
(10)							

5. Remarks: 7/9/09

REVIEWED 8-30-85 BY
BECHTEL ENGINEERING
REVIEWED BY
BECHTEL VOA REP.

CERTIFICATE OF COMPLIANCE

We certify that the statements made in this report are correct and that these components supports conform to the rules of construction of the ASME Code for Nuclear Power Plant Components, Section III, Division 1, Edition 1977, Addenda Winter '77 (Date)
Code Case No. 1644-7

Date 17 March 1981 Signed Pacific Scientific (NPT Certificate Holder) by Bill Jenkins

Our ASME Certificate of Authorization No. 1198 to use the Component Supports (NPT)

Symbol expires Aug. 4, 1981 (Date)

CERTIFICATION OF DESIGN

Design Information on File at Pacific Scientific

Stress Report or Load Capacity Data Sheets on File at:
Pacific Scientific
Filed Per NA 3256

Design Specifications Certified by (1) Leo E. Ay PE State California

Reg. No. 13533

Stress Analysis Report or Load Capacity Data Sheets Certified by (1) Leo E. Ay

PE State California Reg. No. 13533

(1) Last name only, signature not required.

*Supplemental sheets in form of lists, sketches or drawings may be used provided (1) size is 8½ in., (2) information in items 1, 2, &c. 4g on this Data Report is included on each sheet, and (3) each sheet is numbered and number of sheets is recorded at top of this form.

FORM NF-1 (Back)

CERTIFICATE OF SHOP INSPECTION

I, the undersigned, holding a valid commission issued by the National Board of Boiler and Pressure Vessel Inspectors and the State or Province of California and employed by HSBI&I Co. of Hartford, CT have inspected the component supports described in this Data Report on 3/17, 1981 and state that to the best of my knowledge and belief the NPT Certificate Holder has constructed these component supports in accordance with the ASME Code for Nuclear Power Plant Components.

By signing this certificate, neither the Inspector nor his employer makes any warranty, expressed or implied, concerning the component supports described in this Data Report. Furthermore, neither the Inspector nor his employer shall be liable in any manner for any personal injury or property damage or a loss of any kind arising from or connected with this inspection.

Date 3/17/81

Signed William Meyer Commissions Ca. #1494
(Nat'l Bd., State, Prov., and No.)

CERTIFICATION OF FIELD INSPECTION

I, the undersigned, holding a valid commission issued by the National Board of Boiler and Pressure Vessel Inspectors and the State or Province of _____ and employed by _____ of _____ have compared the statements in this Data Report with the described component supports and st that the parts referred to as data items _____, not included in the certificate of shop inspection, have be inspected by me and that to the best of my knowledge and belief the NPT Certificate Holder has constructed these component supports in accor ance with the ASME Code for Nuclear Power Plant Components.

By signing this certificate neither the Inspector nor his employer makes any warranty, expressed or implied, concerning the component supports described in this Data Report. Furthermore, neither the inspector nor his employer shall be liable in any manner for any personal injury or property damage or a loss of any kind arising from or connected with this inspection.

Date _____

Signed _____ Commissions _____
(Nat'l Bd., State, Prov., and No.)

REVIEWED 8-30-83 BY
BASCO ENGINEERING
VERIFIED BY
BASCO VOA REP.

WOT No 01142084 01

ENERGY NORTHWEST
People · Vision · Solutions

FORM NIS-2 OWNER'S REPORT FOR REPAIR/REPLACEMENT ACTIVITY
As Required By The Provisions Of The ASME Code Section XI

Date: 07/09/2009
Sheet: 1 Of 1
Unit: Not Applicable

1. **Owner:** Energy Northwest
   Address: Columbia Generating Station, North Power Plant Loop, Richland, Washington, 99352
2. **Plant:** Columbia Generating Station
   Address: Columbia Generating Station, North Power Plant Loop, Richland, Washington, 99352
3. (a) **Work Performed By:** Energy Northwest
   (b) **Repair/Replacement Organization P.O. No, Job No, etc.:** Energy Northwest
   (c) **Type Code Symbol Stamp:** Not Applicable
   (d) **Certificate Of Authorization No.:** Not Applicable
   (e) **Expiration Date:** Not Applicable
4. **Identification Of System:** Main Steam (MS) System
5. (a) **Applicable Construction Code:** ASME Section III, Code Class 2, 1971 Edition with Winter 1973 Addenda, Code Case: Note 1
   (b) **Applicable Edition Of ASME Section XI Used For Repair/Replacement Activity:** 2001 Edition with 2003 Addenda
   (c) **Applicable ASME Section XI Case(s):** None
6. **Identification Of Components**

Name Of Component	Name Of Manufacturer	Manufacturer's Serial No	National Board No	Other I.D.	Year Built	Corrected, Removed Or Installed	ASME Code Stamped (Yes Or No) Code Class
MS(1)-4C	WPPSS*	MS(1)-4C-P1	N/A	N/A	1983	See Item 7 Below	Yes, Code Class 2
MS-999N	Pacific Scientific	9917	N/A	PSA-10	1981	Removed	No, Code Class 1
MS-999N	Pacific Scientific	9564	N/A	PSA-10	1981	Installed	Yes, Code Class 1

7. **Description Of Work Performed:** Replaced existing snubber for pipe support MS-999N. The replacement work was performed as follows:
   1) Removed existing snubber Serial No 9917.
   2) Installed pretested replacement snubber Serial No 9564.
   3) Torqued the fasteners to the required torque value.
   4) Performed visual examination on the installed replacement snubber. Visual examination results acceptable.

NOTES -

1) The applicable ASME Code Cases, if any are listed on the ASME Code Data Reports.
2) * Company name changed from Washington Public Power Supply System (WPPSS) to Energy Northwest (EN) in 1999.
3) The existing ASME Code Stamped piping system in which the replacement snubber was installed is Main Steam (MS) piping system MS(1)-4C-P1. This piping system is certified to comply with ASME Section III, Code Class 2, 1971 Edition with Winter 1973 Addenda requirements.
4) The replacement snubber Serial No 9564 is certified to comply with ASME Section III, Code Class NF(1), 1977 Edition with Winter 1976 Addenda requirements.
5) ASME Section III, Code Class NF(1) replacement snubber for ASME Section III, Code Class NF(2) application.

PLAN No 01142084 01

ENERGY NORTHWEST
People · Vision · Solutions

FORM NIS-2 OWNER'S REPORT FOR REPAIR/REPLACEMENT ACTIVITY (Back)

8 Tests Conducted: Hydrostatic [ ] **Pneumatic** [ ] **Nominal Operating Pressure** [ ] **Other** [ ]
Exempt [X] **Test Pressure:** Psig **Test Temperature:** °F

9. Remarks (Applicable Manufacturer's Data Reports to be attached): See attached NF-1 Code Data Report for the replacement snubber Serial No 9564.

CERTIFICATE OF COMPLIANCE

I certify that the statements made in this Owner's Report are correct and that this conforms to the requirements of the ASME Code, Section XI.
Type Code Symbol Stamp: Not Applicable
Certificate Of Authorization No.: Not Applicable
Expiration Date: Not Applicable

Prepared By Kuldip Singh - ~~Program Lead Engineer~~ (PLE) **Signed By** Kuldip Singh - ~~Program Lead Engineer~~ (PLE)

Date 7/9/09 **Date** 7/9/09

CERTIFICATE OF INSERVICE INSPECTION

I, the undersigned, holding a valid commission issued by the National Board of Boiler and Pressure Vessel Inspectors and the State of Washington ***and employed by*** Hartford Steam Boiler Of Connecticut of Hartford, Connecticut ***have inspected the components described in this Owner's Report during the period*** 5/11/2009 ***to*** 7/17/2009 ***and state to the best of my knowledge and belief, the Owner has performed examinations and taken corrective measures described in this Owner's Report in accordance with the requirements of the ASME Code, Section XI.***
By signing this certificate neither the Inspector nor his employer makes any warranty, expressed or implied, concerning the examinations and corrective measures described in this Owner's Report. Furthermore, neither the Inspector nor his employer shall be liable in any manner for any personal injury or property damage or a loss of any kind arising from or connected with this inspection.

Inspector's Signature **Commissions** 13172 WANI
National Board, State, and Endorsements

Date 7/17/2009

WO7 No. 01142084 01

As Required by the Provisions of the ASME Code Rules, Section III, Division 1 #10

E-WZ-090

1. Manufactured by Pacific Scientific 1346 S. State College Blvd Anaheim, CA. 92803
(Name and address of NPT Certificate Holder)

2. Manufactured for ITT Grinnell Corp. 621 Dana Street N.E. Warren, Ohio 44481
(Name and address of purchaser or owner)

3. Location of Installation Unknown

4. Identification

	(a) Component Support I.D. No.	(b) Canadian Registration No.	(c) Applicable Drawings with Last Rev. & Date	(d) Stress Report or Load Capacity Data Sheet	(e) Type of Component Support	(f) Class	(g) Nat'l Board No.	(h) Year Built
(1)	9526-9621	None	1801103-07-H	DR-1352-Rev. B	Linear	1	None	1981
(2)								
(3)								
(4)								
(5)								
(6)			MS-999N, S/N 9564					
(7)								
(8)								
(9)								
(10)								

5. Remarks: 7/9/09

CERTIFICATE OF COMPLIANCE

We certify that the statements made in this report are correct and that these components supports conform to the rules of construction of the ASME Code for Nuclear Power Plant Components, Section III, Division 1, Edition 1977, Addenda Winter '77 (Date)

Code Case No. 1644-7

Date 2/13/81 Signed Pacific Scientific (NPT Certificate Holder) by Rosalie A. Nance

Our ASME Certificate of Authorization No. 1198 to use the Component Supports (NPT)

Symbol expires Aug. 4, 1981 (Date)

CERTIFICATION OF DESIGN

Design Information on File at Pacific Scientific

Stress Report or Load Capacity Data Sheets on File at Pacific Scientific

Filed Per NA 3256

Design Specifications Certified by (1) Leo E. Ay PE State California

Reg. No. 13533

Stress Analysis Report or Load Capacity Data Sheets Certified by (1) Leo E. Ay

PE State California Reg. No. 13533

(1) List name only, signature not required.

Supplemental sheets in form of lists, sketches or drawings may be used provided (1) size is 8½ in., (2) information in items 1, 2, 4c, 4g on this Data Report is included on each sheet, and (3) each sheet is numbered and number of sheets is recorded at top of this form.

CERTIFICATE OF SHOP INSPECTION

I the undersigned, holding a valid commission issued by the National Board of Boiler and Pressure Vessel Inspectors and the State or Province of California and employed by HSBI&I Co. of Hartford, CT have inspected the component supports described in this Data Report on 2/14 19 81 and state that to the best of my knowledge and belief the NPT Certificate Holder has constructed these component supports in accordance with the ASME Code for Nuclear Power Plant Components.

By signing this certificate, neither the Inspector nor his employer makes any warranty, expressed or implied, concerning the component supports described in this Data Report. Furthermore, neither the Inspector nor his employer shall be liable in any manner for any personal injury or property damage or a loss of any kind arising from or connected with this inspection.

Date 2/14/81.

Signed William Meyer Commissions Ca. #1494
(Nat'l Bd., State, Prov., and No.)

CERTIFICATION OF FIELD INSPECTION

I, the undersigned, holding a valid commission issued by the National Board of Boiler and Pressure Vessel Inspectors and the State or Province of _____ and employed by _____ of _____ have compared the statements in this Data Report with the described component supports and state that the parts referred to as data items _____, not included in the certificate of shop inspection, have been inspected by me and that to the best of my knowledge and belief the NPT Certificate Holder has constructed these component supports in accordance with the ASME Code for Nuclear Power Plant Components.

By signing this certificate neither the Inspector nor his employer makes any warranty, expressed or implied, concerning the component supports described in this Data Report. Furthermore, neither the inspector nor his employer shall be liable in any manner for any personal injury or property damage or a loss of any kind arising from or connected with this inspection.

Date _____.

Signed _____ Commissions _____
(Nat'l Bd., State, Prov., and No.)

WOT No 01145341 01

ENERGY NORTHWEST
People · Vision · Solutions

FORM NIS-2 OWNER'S REPORT FOR REPAIR/REPLACEMENT ACTIVITY
As Required By The Provisions Of The ASME Code Section XI

1. Owner: Energy Northwest
Address: Columbia Generating Station, North Power Plant Loop, Richland, Washington, 99352
2. Plant: Columbia Generating Station
Address: Columbia Generating Station, North Power Plant Loop, Richland, Washington, 99352

Date: 04/02/2009
Sheet: 1 Of 1
Unit: Not Applicable

3. (a) Work Performed By: Energy Northwest/Scientech
(b) Repair/Replacement Organization P.O. No, Job No, etc.: WO No 01145341/PO No 00327297
(c) Type Code Symbol Stamp: Not Applicable
(d) Certificate Of Authorization No.: Not Applicable
(e) Expiration Date: Not Applicable
4. Identification Of System: Control Rod Drive (CRD)
5. (a) Applicable Construction Code: ASME Section III, Code Class 1 - See Notes For Code Edition, Addenda And Code Cases
(b) Applicable Edition Of ASME Section XI Used For Repair/Replacement Activity: 2001 Edition with 2003 Addenda
(c) Applicable ASME Section XI Case(s): None
6. Identification Of Components

Name Of Component	Name Of Manufacturer	Manufacturer's Serial No	National Board No	Other I.D.	Year Built	Corrected, Removed Or Installed	ASME Code Stamped (Yes Or No) Code Class
CRD	General Electric	6447	N/A	N/A	1974	See Item 7 Below	Yes, Code Class 1
Piston Tube	General Electric	5476	N/A	N/A	1974	Removed	Yes, Code Class 1
Piston Tube	General Electric	1128	N/A	N/A	2005	Installed	Yes, Code Class 1
CT&F	General Electric	6447	N/A	N/A	1974	Removed	Yes, Code Class 1
CT&F	General Electric	A9313	N/A	N/A	1996	Installed	Yes, Code Class 1

7. Description Of Work Performed: Overhauled Control Rod Drive (CRD) assembly Serial No 6447. The overhaul work was performed in accordance with plant procedure PPM No 10.5.4 "Control Rod Drive Overhaul" as follows:

1) Disassembled Control Rod Drive (CRD) assembly for overhaul.
2) Removed existing Piston Tube (PT) assembly Serial No 5476.
3) Installed replacement Piston Tube assembly Serial No 1128.
4) Removed existing Cylinder Tube And Flange (CT&F) assembly Serial No 6447.
5) Installed replacement Cylinder Tube And Flange (CT&F) assembly Serial No A9313.
6) Reinstalled existing ring flange Serial No 2337.
7) Reinstalled existing piston tube nut Serial No 5476.
8) Reinstalled existing ring flange cap screws.

NOTES

1) The applicable ASME Code Cases, if any are listed on the ASME Code Data Reports.
2) The existing Piston Tube assembly Serial No 5476 is certified to comply with ASME Section III, Code Class 1, 1971 Edition with no Addenda.
3) The replacement Piston Tube assembly Serial No 1128 is certified to comply with ASME Section III, Code Class 1, 1974 Edition with Winter 1975 Addenda.
4) The existing Cylinder Tube And Flange (CT&F) assembly Serial No 6447 is certified to comply with ASME Section III, Code Class 1, 1971 Edition with no Addenda.
5) The replacement Cylinder Tube And Flange (CT&F) assembly Serial No A9313 is certified to comply with ASME Section III, Code Class 1, 1974 Edition with Winter 1975 Addenda.
6) ASME pressure boundary (retaining) parts and materials such as ring flange, ring flange cap screws and piston tube nut were reinstalled (reused) during CRD overhaul activities with the exception of Cylinder Tube And Flange (CT&F) assembly and Piston Tube assembly which were replaced.
7) The entire Control Rod Drive (CRD) assembly is identified by the Cylinder Tube And Flange (CT&F) Serial No A9313.

WOT No 01145341 01

ENERGY NORTHWEST
People · Vision · Solutions

FORM NIS-2 OWNER'S REPORT FOR REPAIR/REPLACEMENT ACTIVITY (Back)

8 Tests Conducted: Hydrostatic [ ] **Pneumatic** [ ] **Nominal Operating Pressure** [ ] **Other** [ ]
Exempt [X] **Test Pressure:** Psig **Test Temperature:** °F

9. Remarks (Applicable Manufacturer's Data Reports to be attached): See attached N-2 Code Data Reports for the following CRD parts:

1) Replacement Piston Tube assembly Serial No 1128.
2) Replacement Cylinder Tube And Flange (CT&F) assembly Serial No A9313.

CERTIFICATE OF COMPLIANCE

I certify that the statements made in this Owner's Report are correct and that this conforms to the requirements of the ASME Code, Section XI.
Type Code Symbol Stamp: Not Applicable
Certificate Of Authorization No.: Not Applicable
Expiration Date: Not Applicable

Prepared By Kuldip Singh - Program Lead Engineer (PLE) ***Signed By*** Kuldip Singh - Program Lead Engineer (PLE)

Date 4/7/09 ***Date*** 4/7/09

CERTIFICATE OF INSERVICE INSPECTION

I, the undersigned, holding a valid commission issued by the National Board of Boiler and Pressure Vessel Inspectors and the State of Washington ***and employed by*** Hartford Steam Boiler Of Connecticut of Hartford, Connecticut ***have inspected the components described in this Owner's Report during the period*** 10/29/2008 ***to*** 4/7/2009 ***and state to the best of my knowledge and belief, the Owner has performed examinations and taken corrective measures described in this Owner's Report in accordance with the requirements of the ASME Code, Section XI.***
By signing this certificate neither the Inspector nor his employer makes any warranty, expressed or implied, concerning the examinations and corrective measures described in this Owner's Report. Furthermore, neither the Inspector nor his employer shall be liable in any manner for any personal injury or property damage or a loss of any kind arising from or connected with this inspection.

Inspector's Signature ***Commissions*** 13172 WANI
National Board, State, and Endorsements

Date 4/7/2009

WOT No. 01145341 01

FORM N-2 CERTIFICATE HOLDERS' DATA REPORT FOR NUCLEAR PART AND APPURTENANCES*

As required by the Provision of the ASME code Rules, Section III, Division I

4/7/09

1. Manufactured and certified by *General Electric Company Nuclear Energy (GE-NE)*
3901 Castle Hayne Road, Wilmington, North Carolina 28401
(Name and address of NPT Certificate Holder)

(b) Manufactured for COLUMBIA RICHLAND, WA. 99352
(Name and address of N Certificate Holder for completed nuclear component)

2. Identification - Certificate Holder's S/N of Part 1128 Nat'l Bd. No. N/A

(a) Constructed According to Drawing No. 798D228G012,REV.38 Prepared by P. PANSOY

(b) Description of Part Inspected PISTON TUBE ASSEMBLY

(c) Applicable ASME Code: Section III, Edition 1974 , Addenda Date W'75 , Case No. 1361-2 , Class 1

3. Remarks: STANDARD PART FOR USE WITH REACTOR. HYDROSTATICALLY TESTED AT 1850 PSI.MIN.
(Brief description of service for which component was designed)

We certify that the statements in this report are correct and this vessel part or appurtenance as defined in the code conforms to the rules of construction of the ASME Code Section III. (The applicable Designed Specification and Stress Report are not the responsibility of the NPT Certificate Holder for parts. An NPT Certification Holder for appurtenances is responsible for furnishing a separate Design Specification and Stress Report if the appurtenances is not included in the component Design Specification and Stress Report).

Date 7/13/05 Signed GE-NE (NPT Certificate Holder) By (SCQ Representative)

Certificate of Authorization Expires 6/16/2008 Certificate of Authorization No. NPT N-1151

CERTIFICATION OF DESIGN FOR APPURTENANCE

Design information on file at GE COMPANY, SAN JOSE, CALIFORNIA

Stress analysis report on file at GE COMPANY, SAN JOSE, CALIFORNIA

DC22A6253 Rev. 2
Design specification certified by B. N. SRIDHAR Prof. Eng. State CALIF. Reg. No. 18345

23A4920 Rev. 2
Stress analysis report certified by E. Y. GIBO Prof. Eng. State CALIF. Reg. No. M18646

CERTIFICATION OF SHOP INSPECTION

I, the undersigned, holding a valid commission by the National Board of Boiler and Pressure Inspectors and/or the State or Province of North Carolina and employed by Department of Labor of State of North Carolina have inspected the part of a pressure vessel described in this Partial Data Report on 7-13-2005, and state that to the best of my knowledge and belief, the NPT Certificate Holder has constructed this part in accordance with the ASME Code Section III.

By signing this certificate, neither the Inspector nor his employer makes any warranty, expressed or implied, concerning the part described in the Partial Data Report. Furthermore, neither the Inspector nor his employer shall be liable in any manner for any personal injury or property damages or a loss of any kind arising from or connected with this inspection.

7-13 2005 Date — Inspector's Signature — NB 11725 ABN NS National Board, State, Province and No.

*Supplemental sheets in form of lists, sketches or drawing may be used provided (1) size is 8 ½ " x 11", (2) information in 1-2 on the Data Report is included on each sheet, and (3) each sheet is numbered and number of sheets is recorded in item 3 "Remarks".

WOT NO. 01145341 01

FORM N-2 NPT CERTIFICATE HOLDERS' DATA REPORT FOR NUCLEAR PART AND APPURTENANCES*

As required by the Provision of the ASME Code Rules, Section III, Div. I

1. Manufactured & Certified by : General Electric Company Nuclear Energy (GE-NE)
   3901 Castle Hayne Road, Wilmington, North Carolina 28401
   (Name and Address of NPT Certificate Holder)

   (b) Manufactured for : WNP 2 Richland, Washington 99352
   (Name and Address of N Certificate Holder for completed nuclear component)

2. Identification - Certificate Holder's S/N of Part : A9313 Nat'l Bd. No. N/A

   (a) Constructed According to Drawing No: 919D258G003 Rev 18 Dwg. Prepared by D. L. Peterson

   (b) Description of Part Inspected: Cylinder Tube & Flange

   (c) Applicable ASME Code: Section III , Edition 1974 , Addenda Date W'75 , Case No. 1361-2 Class 1

3. REMARKS: Standard part for use with Reactor. Hydrostatically tested at 1825 psi. min.
   (Brief description of service for which component was designed)

Sheet 1 of 2

We certify that the statements in this report are correct and this vessel part or appurtenance as defined in the code conforms to the rules of construction of the ASME Code Section III. (The applicable Designed Specification and Stress Report are not the responsibility of the NPT Certificate Holder for parts. An NPT Certification Holder for appurtenances is responsible for furnishing a separate Design Specification and Stress Report if the appurtenance is not included in the component Design Specification and Stress Report).

Date: 03/28/96 Signed GE-NE (NPT Certificate Holder) By C Bazzit (SC QA Representive)

Certificate of Authorization Expires: 6/16/96 Certification of Authorization No. : NPT N - 1151

Certification of Design for Appurtenance

Design information on file at GE Company, San Jose, California

Stress analysis report on file at GE Company, San Jose, California

DC22A6253 Rev. 2
Design specification certified by B.N. Sridhar Prof. Eng. State Calif. Reg. No. 18345

DC22A6254 Rev 1
Stress analysis report certified by Edward Yoshio Prof. Eng. State Calif. Reg. No. M018646

Certification of Shop Inspection

I, the undersigned, holding a valid commission by the National Board of Boiler and Pressure Inspectors and/or the State or Province of North Carolina and employed by Department of Labor of State of North Carolina have inspected the part of a pressure vessel described in this Partial Data Report on 3/29, 96, and state that to the best of my knowledge and belief, the NPT Certificate Holder has constructed this part in accordance with the ASME Code Section III.
By signing this certificate, neither the Inspector nor his employer makes any warranty, expressed or implied, concerning the part described in the Partial Data Report. Furthermore, neither the Inspector nor his employer shall be liable in any manner for any personal injury or property damages or a loss of any kind arising from or connected with this inspection.

3/29/ 96 (Date) Inspector's Signature NC 856 National Board, State, Province And No.

Supplemental sheets in form of lists, sketches or drawing may be used provided (1) size is 8-1/2" x 11", (2) information in 1-2 on this Data Report is included on each sheet, and (3) each sheet is numbered and number of sheets is recorded in Item 3. "REMARKS".

(07/90)

FORM N-2 (back)

Items 4-8 Incl. to be completed for single wall vessels, jackets vessels, or shells of heat exchangers.

4. Shell: Material _____ T.S. _____ Nominal Thickness ___ in. Corrosion Allowance ___ in. Dia. ___ ft. ___ in. Length ___ ft. ___ in.
(Kind & Spec. No.) (Min. of Range Specified)

5. Seams: Long _____ H.T.[1] _____ R.T. _____ Efficiency _____%
Girth _____ H.T.[1] _____ R.T. _____ No. of Courses _____

6. Heads: (a) Material _____ T.S. _____ (b) Material _____ T.S. _____

	Location (Top Bottom, Ends)	Thickness	Crown Radius	Knuckle Radius	Elliptical Ratio	Concial Apex Angle	Hemispherical Radius	Flat Diameter	Side to Press. (conv. or conc.)
(a)									
(b)									

If removable, bolts used _____ (Material, Spec. No., T.S. Size Number) Other fastening _____ (Describe or attach sketch)

7. Jacket Closure: _____
(Describe as ogee and weld, bar, etc. If bar give dimensions, if bolts, describe or sketch)

Drop Weight _____
Charpy Impact _____ ft-lb

8. Design pressure[2] 1250 psi at 575 °F at temp of _____ °F

Items 9 and 10 to be completed for tube sections

9. Tube Sheets: Stationary. Material _____ (Kind & Spec. No.) Dia. _____ (Subject to pressure) Thickness ___ in. Attachment _____ (Welded, Bolted)
Floating. Material _____ Dia. _____ Thickness ___ in. Attachment _____

10. Tubes: Material _____ O.D. _____ in. Thickness _____ inches or gage. Number _____ Type _____ (Str. or U)

Items 11 - 14 incl. to be completed for inner chambers of jacketed vessels, or channels of heat exchangers.

11. Shell: Material _____ T.S. _____ Nominal Thickness ___ in. Corrosion Allowance ___ in. Dia. ___ ft. ___ in. Length ___ ft. ___ in.
(Kind & Spec. No.) (Min. of Range Specified)

12. Seams: Long _____ H.T.[1] _____ R.T. _____ Efficiency _____%
Girth _____ H.T.[1] _____ R.T. _____ No. of Courses _____

13. Heads: (a) Material _____ T.S. _____ (b) Material _____ T.S. _____

	Location	Thickness	Crown Radius	Knuckle Radius	Elliptical Ratio	Concial Apex Angle	Hemispherical Radius	Flat Diameter	Side to Press. (conv. or conc.)
(a)	Top, bottom, ends								
(b)	Channel								

If removable, bolts used (a)_____ (b)_____ (c)_____ Other fastening _____ (Describe or attach sketch)

Drop Weight _____
Charpy Impact _____ ft-lb

14. Design pressure[2] _____ psi at _____ °F at temp of _____ °F

Items below to be completed for all vessels where applicable.

15. Safety Valve Outlets: Number _____ Size _____ Location _____

16. Nozzles:

Purpose (Inlet, Outlet, Drain)	Number	Dia. or Size	Type	Material	Thickness	Reinforcement Material	How Attached

17. Inspection Openings: Manholes, No. _____ Size _____ Location _____
Handholes, No. _____ Size _____ Location _____
Threaded, No. _____ Size _____ Location _____

18. Supports: Skirt _____ (Yes or No) Lugs _____ (Number) Legs _____ (Number) Other _____ (Describe) Attached _____ (Where & How)

1 - If Postweld Heat-Treated.
2 - List other internal or external pressure with coincident temperature when applicable.

WOT No. 01145341 01

FORM N-2 NPT CERTIFICA .IOLDERS' DATA REPORT FOR NUCLE PART AND APPURTENANCES*
As required by the Provision of the ASME Code Rules, Section III, Div. I

1. Manufactured & Certified by : General Electric Company Nuclear Energy (GE-NE) Philip Sang 4/6/09.
3901 Castle Hayne Road, Wilmington, North Carolina 28401
(Name and Address of NPT Certificate Holder)

(b) Manufactured for : WNP 2 Richland, Washington 99352
(Name and Address of N Certificate Holder for completed nuclear component)

2. Identification - Certificate Holder's S/N of Part : A9313 Nat'l Bd. No. N/A

(a) Constructed According to Drawing No: 919D258G003 Rev 18 Dwg. Prepared by D. L. Peterson

(b) Description of Part Inspected: Cylinder Tube & Flange

(c) Applicable ASME Code: Section III , Edition 1974 , Addenda Date W'75 , Case No. 1361-2 Class 1

3. REMARKS: Standard part for use with Reactor. Hydrostatically tested at 1825 psi. min.
(Brief description of service for which component was designed)

1. Cap 166B9274P001
SA182 - F316
3/8" thick x 1 1/16" OD

2. Indicator Tube 167B4908P001
SA312 - TP316
3/4" sch 40 - seamless pipe
0.113" wall thickness
1.065" max. dia.

3. Plug 159A1176P001
SA182 - F304
1/4" thick x 0.812" OD

4. Flange 919D610P001 (719E474)
SA182 - F304
3.37" thick x 9 5/8" OD

5. Head 129B3539P005
SA182 - F304
7/8" thick x 2.875" dia.

6. Ring Flange 114B5122P002
SA182 - F304
1" thick x 5.0" OD x 1.75" ID

7. Cap Screw 117C4516P002
SA193 - B6
6 ea. 1/2" dia. on 4 1/8" bolt circle

8. Plug 175A7961P001
SA182 - F304
0.38" thick x 1.307" dia.

9. Nut 114B5460P001
XM - 19 SA479
1.30" thick x 2.62" dia.

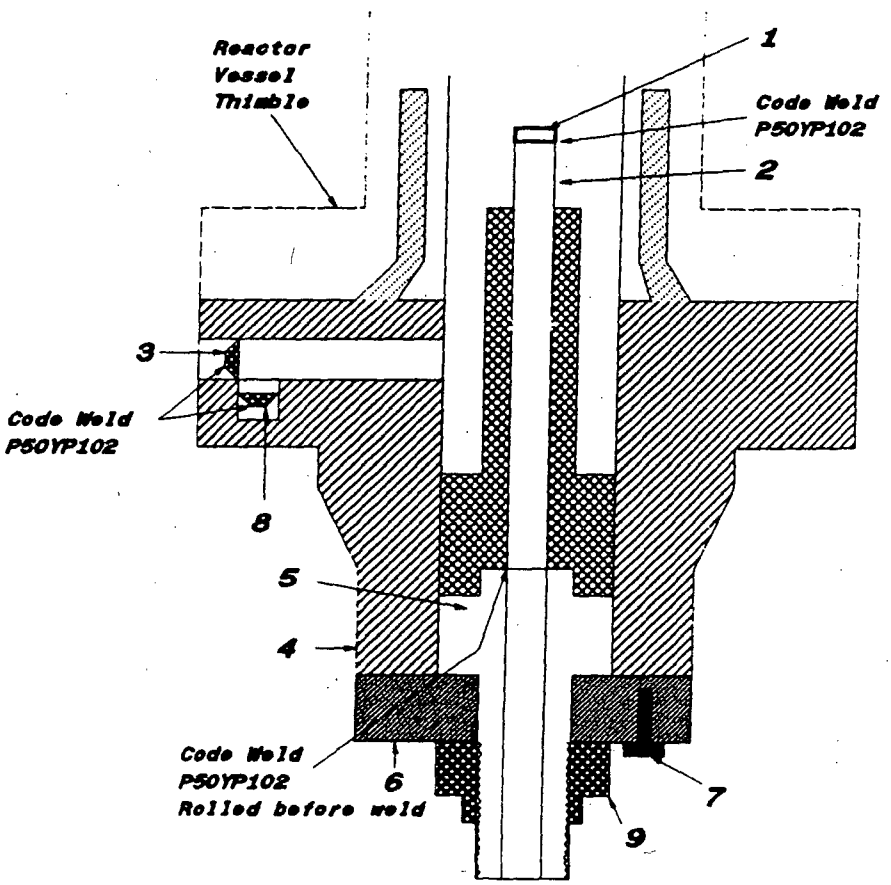

WOT No 01145341 12

ENERGY NORTHWEST
People · Vision · Solutions

FORM NIS-2 OWNER'S REPORT FOR REPAIR/REPLACEMENT ACTIVITY
As Required By The Provisions Of The ASME Code Section XI

1. Owner: Energy Northwest
Address: Columbia Generating Station, North Power Plant Loop, Richland, Washington, 99352
2. Plant: Columbia Generating Station
Address: Columbia Generating Station, North Power Plant Loop, Richland, Washington, 99352

Date: 04/03/2009
Sheet: 1 Of 1
Unit: Not Applicable

3. (a) Work Performed By: Energy Northwest/Scientech
(b) Repair/Replacement Organization P.O. No, Job No, etc.: WO No 01145341/PO No 00327297
(c) Type Code Symbol Stamp: Not Applicable
(d) Certificate Of Authorization No.: Not Applicable
(e) Expiration Date: Not Applicable
4. Identification Of System: Control Rod Drive (CRD)
5. (a) Applicable Construction Code: ASME Section III, Code Class 1 - See Notes For Code Edition, Addenda And Code Cases
(b) Applicable Edition Of ASME Section XI Used For Repair/Replacement Activity: 2001 Edition with 2003 Addenda
(c) Applicable ASME Section XI Case(s): None
6. Identification Of Components

Name Of Component	Name Of Manufacturer	Manufacturer's Serial No	National Board No	Other I.D.	Year Built	Corrected, Removed Or Installed	ASME Code Stamped (Yes Or No) Code Class
CRD	General Electric	7585A	N/A	N/A	1977	See Item 7 Below	Yes, Code Class 1
Piston Tube	General Electric	4788	N/A	N/A	1977	Removed	Yes, Code Class 1
Piston Tube	General Electric	1117	N/A	N/A	2005	Installed	Yes, Code Class 1

7. Description Of Work Performed: Overhauled Control Rod Drive (CRD) assembly Serial No 7585A. The overhaul work was performed in accordance with plant procedure PPM No 10.5.4 "Control Rod Drive Overhaul" as follows:

1) Disassembled Control Rod Drive (CRD) assembly for overhaul.
2) Removed existing Piston Tube (PT) assembly Serial No 4788.
3) Installed replacement Piston Tube assembly Serial No 1117.
4) Performed VT-1 visual examination on the replacement ring flange cap screws. VT-1 visual examination results acceptable.
5) Reinstalled existing Cylinder Tube And Flange (CT&F) assembly Serial No 7585A.
6) Reinstalled existing ring flange Serial No 2654.
7) Reinstalled existing piston tube nut Serial No 3046.
8) Reinstalled existing ring flange cap screws.
9) Installed two (2) VT-1 visually examined replacement ring flange cap screws.

NOTES -

1) The applicable ASME Code Cases, if any are listed on the ASME Code Data Reports.
2) The existing Piston Tube assembly Serial No 4788 is certified to comply with ASME Section III, Code Class 1, 1971 Edition with no Addenda.
3) The replacement Piston Tube assembly Serial No 1117 is certified to comply with ASME Section III, Code Class 1, 1974 Edition with Winter 1975 Addenda.
4) ASME pressure boundary (retaining) parts and materials such as Cylinder Tube And Flange (CT&F), ring flange, ring flange cap screws and piston tube nut were reinstalled (reused) during CRD overhaul activities with the exception of two (2) ring flange cap screws and Piston Tube assembly which were replaced.
5) The entire Control Rod Drive (CRD) assembly is identified by the Cylinder Tube And Flange (CT&F) Serial No 7585A.

WOT No 01145341 12

ENERGY NORTHWEST
People · Vision · Solutions

FORM NIS-2 OWNER'S REPORT FOR REPAIR/REPLACEMENT ACTIVITY (Back)

8 Tests Conducted: Hydrostatic [ ] **Pneumatic** [ ] **Nominal Operating Pressure** [ ] **Other** [ ]
Exempt [X] **Test Pressure:** Psig **Test Temperature:** °F

9. Remarks (Applicable Manufacturer's Data Reports to be attached): See attached N-2 Code Data Report for the following CRD part:

1) Replacement Piston Tube assembly Serial No 1117.

CERTIFICATE OF COMPLIANCE

I certify that the statements made in this Owner's Report are correct and that this conforms to the requirements of the ASME Code, Section XI.
Type Code Symbol Stamp: Not Applicable
Certificate Of Authorization No.: Not Applicable
Expiration Date: Not Applicable

Prepared By Kuldip Singh - Program Lead Engineer (PLE) ***Signed By*** Kuldip Singh - Program Lead Engineer (PLE)

Date 4/7/09 ***Date*** 4/7/09

CERTIFICATE OF INSERVICE INSPECTION

I, the undersigned, holding a valid commission issued by the National Board of Boiler and Pressure Vessel Inspectors and the State of Washington ***and employed by*** Hartford Steam Boiler Of Connecticut of Hartford, Connecticut ***have inspected the components described in this Owner's Report during the period*** 10/29/2008 ***to*** 4/7/2009 ***and state to the best of my knowledge and belief, the Owner has performed examinations and taken corrective measures described in this Owner's Report in accordance with the requirements of the ASME Code, Section XI.***
By signing this certificate neither the Inspector nor his employer makes any warranty, expressed or implied, concerning the examinations and corrective measures described in this Owner's Report. Furthermore, neither the Inspector nor his employer shall be liable in any manner for any personal injury or property damage or a loss of any kind arising from or connected with this inspection.

Inspector's Signature ***Commissions*** 13172 WANI
National Board, State, and Endorsements

Date 4/7/2009

WOT NO. 01145341 12

FORM N-2 CERTIFICATE HOLDERS' DATA REPORT FOR NUCLEAR PART AND APPURTENANCES*

As required by the Provision of the ASME code Rules, Section III, Division I

Philip Smith 4/6/02.

1. Manufactured and certified by *General Electric Company Nuclear Energy (GE-NE)*
3901 Castle Hayne Road, Wilmington, North Carolina 28401
(Name and address of NPT Certificate Holder)

(b) Manufactured for COLUMBIA RICHLAND, WA. 99352
(Name and address of N Certificate Holder for completed nuclear component)

2. Identification - Certificate Holder's S/N of Part 1117 Nat'l Bd. No. N/A

(a) Constructed According to Drawing No. 798D228G012,REV.38 Prepared by P. PANSOY

(b) Description of Part Inspected PISTON TUBE ASSEMBLY

(c) Applicable ASME Code: Section III, Edition 1974 , Addenda Date W'75 , Case No. 1361-2 , Class 1

3. Remarks: STANDARD PART FOR USE WITH REACTOR. HYDROSTATICALLY TESTED AT 1900 PSI.MIN.
(Brief description of service for which component was designed)

We certify that the statements in this report are correct and this vessel part or appurtenance as defined in the code conforms to the rules of construction of the ASME Code Section III. (The applicable Designed Specification and Stress Report are not the responsibility of the NPT Certificate Holder for parts. An NPT Certification Holder for appurtenances is responsible for furnishing a separate Design Specification and Stress Report if the appurtenances is not included in the component Design Specification and Stress Report).

Date 7/13/05 Signed GE-NE (NPT Certificate Holder) By (SCQ Representative)

Certificate of Authorization Expires 6/16/2008 Certificate of Authorization No. NPT N-1151

CERTIFICATION OF DESIGN FOR APPURTENANCE

Design information on file at GE COMPANY, SAN JOSE, CALIFORNIA

Stress analysis report on file at GE COMPANY, SAN JOSE, CALIFORNIA

DC22A6253 Rev. 2
Design specification certified by B. N. SRIDHAR Prof. Eng. State CALIF. Reg. No. 18345

23A4920 Rev. 2
Stress analysis report certified by E. Y. GIBO Prof. Eng. State CALIF. Reg. No. M18646

CERTIFICATION OF SHOP INSPECTION

I, the undersigned, holding a valid commission by the National Board of Boiler and Pressure Inspectors and/or the State or Province of North Carolina and employed by Department of Labor of State of North Carolina have inspected the part of a pressure vessel described in this Partial Data Report on 7-13, 2005 and state that to the best of my knowledge and belief, the NPT Certificate Holder has constructed this part in accordance with the ASME Code Section III.

By signing this certificate, neither the Inspector nor his employer makes any warranty, expressed or implied, concerning the part described in the Partial Data Report. Furthermore, neither the Inspector nor his employer shall be liable in any manner for any personal injury or property damages or a loss of any kind arising from or connected with this inspection.

7-13 2005 (Date) Carlyle C. Dautrich (Inspector's Signature) NB 11725 ABN NS (National Board, State, Province and No.)

*Supplemental sheets in form of lists, sketches or drawing may be used provided (1) size is 8 ½ " x 11", (2) information in 1-2 on the Data Report is included on each sheet, and (3) each sheet is numbered and number of sheets is recorded in item 3 "Remarks".

ENERGY NORTHWEST
People · Vision · Solutions

FORM NIS-2 OWNER'S REPORT FOR REPAIR/REPLACEMENT ACTIVITY
As Required By The Provisions Of The ASME Code Section XI

1. Owner: Energy Northwest
Address: Columbia Generating Station, North Power Plant Loop, Richland, Washington, 99352
2. Plant: Columbia Generating Station
Address: Columbia Generating Station, North Power Plant Loop, Richland, Washington, 99352

Date: 04/03/2009
Sheet: 1 Of 1
Unit: Not Applicable

3. (a) Work Performed By: Energy Northwest/Scientech
(b) Repair/Replacement Organization P.O. No, Job No, etc.: WO No 01145341/PO No 00327297
(c) Type Code Symbol Stamp: Not Applicable
(d) Certificate Of Authorization No.: Not Applicable
(e) Expiration Date: Not Applicable
4. Identification Of System: Control Rod Drive (CRD)
5. (a) Applicable Construction Code: ASME Section III, Code Class 1 - See Notes For Code Edition, Addenda And Code Cases
(b) Applicable Edition Of ASME Section XI Used For Repair/Replacement Activity: 2001 Edition with 2003 Addenda
(c) Applicable ASME Section XI Case(s): None
6. Identification Of Components

Name Of Component	Name Of Manufacturer	Manufacturer's Serial No	National Board No	Other I.D.	Year Built	Corrected, Removed Or Installed	ASME Code Stamped (Yes Or No) Code Class
CRD	General Electric	7091	N/A	N/A	1975	See Item 7 Below	Yes, Code Class 1
CT&F	General Electric	7091	N/A	N/A	1975	Removed	Yes, Code Class 1
CT&F	General Electric	A9296	N/A	N/A	1996	Installed	Yes, Code Class 1

7. Description Of Work Performed: Overhauled Control Rod Drive (CRD) assembly Serial No 7091. The overhaul work was performed in accordance with plant procedure PPM No 10.5.4 "Control Rod Drive Overhaul" as follows:

1) Disassembled Control Rod Drive (CRD) assembly for overhaul.
2) Removed existing Cylinder Tube And Flange (CT&F) assembly Serial No 7091.
3) Installed replacement Cylinder Tube And Flange (CT&F) assembly Serial No A9296.
4) Reinstalled replacement Piston Tube assembly Serial No 5632.
5) Reinstalled existing ring flange Serial No 2430.
6) Reinstalled existing piston tube nut Serial No 3070.
7) Reinstalled existing ring flange cap screws.

NOTES -

1) The applicable ASME Code Cases, if any are listed on the ASME Code Data Reports.
2) The existing Cylinder Tube And Flange (CT&F) assembly Serial No 7091 is certified to comply with ASME Section III, Code Class 1, 1971 Edition with no Addenda.
3) The replacement Cylinder Tube And Flange (CT&F) assembly Serial No A9296 is certified to comply with ASME Section III, Code Class 1, 1974 Edition with Winter 1975 Addenda.
4) ASME pressure boundary (retaining) parts and materials such as ring flange, ring flange cap screws and piston tube nut, Piston Tube assembly were reinstalled (reused) during CRD overhaul activities with the exception of Cylinder Tube And Flange (CT&F) assembly which was replaced.
5) The entire Control Rod Drive (CRD) assembly is identified by the Cylinder Tube And Flange (CT&F) Serial No A9296.

WOT No 01145341 13

ENERGY NORTHWEST
People·Vision·Solutions

FORM NIS-2 OWNER'S REPORT FOR REPAIR/REPLACEMENT ACTIVITY (Back)

8 Tests Conducted: Hydrostatic [ ] **Pneumatic** [ ] **Nominal Operating Pressure** [ ] **Other** [ ]
Exempt [X] **Test Pressure:** Psig **Test Temperature:** °F

9. Remarks (Applicable Manufacturer's Data Reports to be attached): See attached N-2 Code Data Report for the following CRD part:

1) Replacement Cylinder Tube And Flange (CT&F) assembly Serial No A9296.

CERTIFICATE OF COMPLIANCE

I certify that the statements made in this Owner's Report are correct and that this conforms to the requirements of the ASME Code, Section XI.
Type Code Symbol Stamp: Not Applicable
Certificate Of Authorization No.: Not Applicable
Expiration Date: Not Applicable

Prepared By Kuldip Singh - Program Lead Engineer (PLE) ***Signed By*** Kuldip Singh - Program Lead Engineer (PLE)

Date 4/7/09 ***Date*** 4/7/09

CERTIFICATE OF INSERVICE INSPECTION

I, the undersigned, holding a valid commission issued by the National Board of Boiler and Pressure Vessel Inspectors and the State of Washington ***and employed by*** Hartford Steam Boiler Of Connecticut of Hartford, Connecticut ***have inspected the components described in this Owner's Report during the period*** 10/29/2008 ***to*** 4/7/2009 ***and state to the best of my knowledge and belief, the Owner has performed examinations and taken corrective measures described in this Owner's Report in accordance with the requirements of the ASME Code, Section XI.***
By signing this certificate neither the Inspector nor his employer makes any warranty, expressed or implied, concerning the examinations and corrective measures described in this Owner's Report. Furthermore, neither the Inspector nor his employer shall be liable in any manner for any personal injury or property damage or a loss of any kind arising from or connected with this inspection.

Inspector's Signature ***Commissions*** 13172 WANI
National Board, State, and Endorsements

Date 4/7/2009

WO1 No. 01145341 13

FORM N-2 NPT CERTIFICATE HOLDERS' DATA REPORT FOR NUCLEAR PART AND APPURTENANCES*

As required by the Provision of the ASME Code Rules, Section III, Div. I

1. Manufactured & Certified by : General Electric Company Nuclear Energy (GE-NE)
   3901 Castle Hayne Road, Wilmington, North Carolina 28401
   (Name and Address of NPT Certificate Holder)

   4/6/09.

   (b) Manufactured for : WNP 2 Richland, Washington 99352
   (Name and Address of N Certificate Holder for completed nuclear component)

2. Identification - Certificate Holder's S/N of Part : A9296 Nat'l Bd. No. N/A

   (a) Constructed According to Drawing No: 919D258G003 Rev 18 Dwg. Prepared by D. L. Peterson

   (b) Description of Part Inspected: Cylinder Tube & Flange

   (c) Applicable ASME Code: Section III , Edition 1974 , Addenda Date W'75 , Case No. 1361-2 Class 1

3. REMARKS: Standard part for use with Reactor. Hydrostatically tested at 1825 psi. min.
   (Brief description of service for which component was designed)

Sheet 1 of 2

We certify that the statements in this report are correct and this vessel part or appurtenance as defined in the code conforms to the rules of construction of the ASME Code Section III. (The applicable Designed Specification and Stress Report are not the responsibility of the NPT Certificate Holder for parts. An NPT Certification Holder for appurtenances is responsible for furnishing a separate Design Specification and Stress Report if the appurtenance is not included in the component Design Specification and Stress Report).

Date: 03/28/96 Signed GE-NE (NPT Certificate Holder) By C S Bazzett (SC QA Representive)

Certificate of Authorization Expires: 6/16/96 Certification of Authorization No. : NPT N - 1151

Certification of Design for Appurtenance

Design information on file at GE Company, San Jose, California

Stress analysis report on file at GE Company, San Jose, California

DC22A6253 Rev. 2
Design specification certified by B.N. Sridhar Prof. Eng. State Calif. Reg. No. 18345

DC22A6254 Rev 1
Stress analysis report certified by Edward Yoshio Prof. Eng. State Calif. Reg. No. M018646

Certification of Shop Inspection

I, the undersigned, holding a valid commission by the National Board of Boiler and Pressure Inspectors and/or the State or Province of North Carolina and employed by Department of Labor of State of North Carolina have inspected the part of a pressure vessel described in this Partial Data Report on 3-29, 96, and state that to the best of my knowledge and belief, the NPT Certificate Holder has constructed this part in accordance with the ASME Code Section III.
By signing this certificate, neither the Inspector nor his employer makes any warranty, expressed or implied, concerning the part described in the Partial Data Report. Furthermore, neither the Inspector nor his employer shall be liable in any manner for any personal injury or property damages or a loss of any kind arising from or connected with this inspection.

3-29, 96 Thomas Fuss NC 856
Date Inspector's Signature National Board, State, Province And No.

upplemental sheets in form of lists, sketches or drawing may be used provided (1) size is 8-1/2" x 11", (2) information in 1-2 on this Data Report is included on each sheet, and (3) each sheet is numbered and number of sheets is recorded in Item 3. "REMARKS".

(07/90)

FORM N-2 (back)

Items 4-8 Incl. to be completed for single wall vessels, jackets vessels, or shells of heat exchangers.

4. Shell: Material _____ T.S. _____ Nominal Thickness ___ in. Corrosion Allowance ___ in. Dia. ___ ft. ___ in. Length ___ ft. ___ in.
(Kind & Spec. No.) (Min. of Range Specified)

5. Seams: Long _____ H.T.[1] _____ R.T. _____ Efficiency _____%
Girth _____ H.T.[1] _____ R.T. _____ No. of Courses _____

6. Heads: (a) Material _____ T.S. _____ (b) Material _____ T.S. _____

	Location (Top Bottom, Ends)	Thickness	Crown Radius	Knuckle Radius	Elliptical Ratio	Concial Apex Angle	Hemispherical Radius	Flat Diameter	Side to Press. (conv. or conc.)
(a)									
(b)									

If removable, bolts used _____ (Material, Spec. No., T.S. Size Number) Other fastening _____ (Describe or attach sketch)

7. Jacket Closure: _____
(Describe as ogee and weld, bar, etc. If bar give dimensions, if bolts, describe or sketch)

Drop Weight _____
Charpy Impact _____ ft-lb

8. Design pressure[2] 1250 psi at 575 °F at temp of _____ °F

Items 9 and 10 to be completed for tube sections

9. Tube Sheets: Stationary. Material _____ (Kind & Spec. No.) Dia. _____ (Subject to pressure) Thickness ___ in. Attachment _____ (Welded, Bolted)
Floating. Material _____ Dia. _____ Thickness ___ in. Attachment _____

10. Tubes: Material _____ O.D. _____ in. Thickness _____ inches or gage. Number _____ Type _____ (Str. or U)

Items 11 - 14 incl. to be completed for inner chambers of jacketed vessels, or channels of heat exchangers.

11. Shell: Material _____ T.S. _____ Nominal Thickness ___ in. Corrosion Allowance ___ in. Dia. ___ ft. ___ in. Length ___ ft. ___ in.
(Kind & Spec. No.) (Min. of Range Specified)

12. Seams: Long _____ H.T.[1] _____ R.T. _____ Efficiency _____%
Girth _____ H.T.[1] _____ R.T. _____ No. of Courses _____

13. Heads: (a) Material _____ T.S. _____ (b) Material _____ T.S. _____

	Location	Thickness	Crown Radius	Knuckle Radius	Elliptical Ratio	Concial Apex Angle	Hemispherical Radius	Flat Diameter	Side to Press. (conv. or conc.)
(a)	Top, bottom, ends								
(b)	Channel								

If removable, bolts used (a)_____ (b)_____ (c)_____ Other fastening _____ (Describe or attach sketch)

Drop Weight _____
Charpy Impact _____ ft-lb

14. Design pressure[2] _____ psi at _____ °F at temp of _____ °F

Items below to be completed for all vessels where applicable.

15. Safety Valve Outlets: Number _____ Size _____ Location _____

16. Nozzles:

Purpose (Inlet, Outlet, Drain)	Number	Dia. or Size	Type	Material	Thickness	Reinforcement Material	How Attached

17. Inspection Openings: Manholes, No. _____ Size _____ Location _____
Handholes, No. _____ Size _____ Location _____
Threaded, No. _____ Size _____ Location _____

18. Supports: Skirt _____ (Yes or No) Lugs _____ (Number) Legs _____ (Number) Other _____ (Describe) Attached _____ (Where & How)

1 - If Postweld Heat-Treated.
2 - List other internal or external pressure with coincident temperature when applicable.

WOT No. 01145341 13

FORM N-2 NPT CERTIFICA HOLDERS' DATA REPORT FOR NUCLE PART AND APPURTENANCES*

As required by the Provision of the ASME Code Rules, Section III, Div. I

1. Manufactured & Certified by : General Electric Company Nuclear Energy (GE-NE)

3901 Castle Hayne Road, Wilmington, North Carolina 28401

(Name and Address of NPT Certificate Holder)

(b) Manufactured for : WNP 2 Richland, Washington 99352

(Name and Address of N Certificate Holder for completed nuclear component)

2. Identification - Certificate Holder's S/N of Part : A9296 Nat'l Bd. No. N/A

(a) Constructed According to Drawing No: 919D258G003 Rev 18 Dwg. Prepared by D. L. Peterson

(b) Description of Part Inspected: Cylinder Tube & Flange

(c) Applicable ASME Code: Section III , Edition 1974 , Addenda Date W'75 , Case No. 1361-2 Class 1

3. REMARKS: Standard part for use with Reactor. Hydrostatically tested at 1825 psi. min.

(Brief description of service for which component was designed)

Sheet 2 of 2

1. Cap 166B9274P001
   SA182 - F316
   3/8" thick x 1 1/16" OD

2. Indicator Tube 167B4908P001
   SA312 - TP316
   3/4" sch 40 - seamless pipe
   0.113" wall thickness
   1.065" max. dia.

3. Plug 159A1176P001
   SA182 - F304
   1/4" thick x 0.812" OD

4. Flange 919D610P001 (719E474)
   SA182 - F304
   3.37" thick x 9 5/8" OD

5. Head 129B3539P005
   SA182 - F304
   7/8" thick x 2.875" dia.

6. Ring Flange 114B5122P002
   SA182 - F304
   1" thick x 5.0" OD x 1.75" ID

7. Cap Screw 117C4516P002
   SA193 - B6
   6 ea. 1/2" dia. on 4 1/8" bolt circle

8. Plug 175A7961P001
   SA182 - F304
   0.38" thick x 1.307" dia.

9. Nut 114B5460P001
   XM - 19 SA479
   1.30" thick x 2.62" dia.

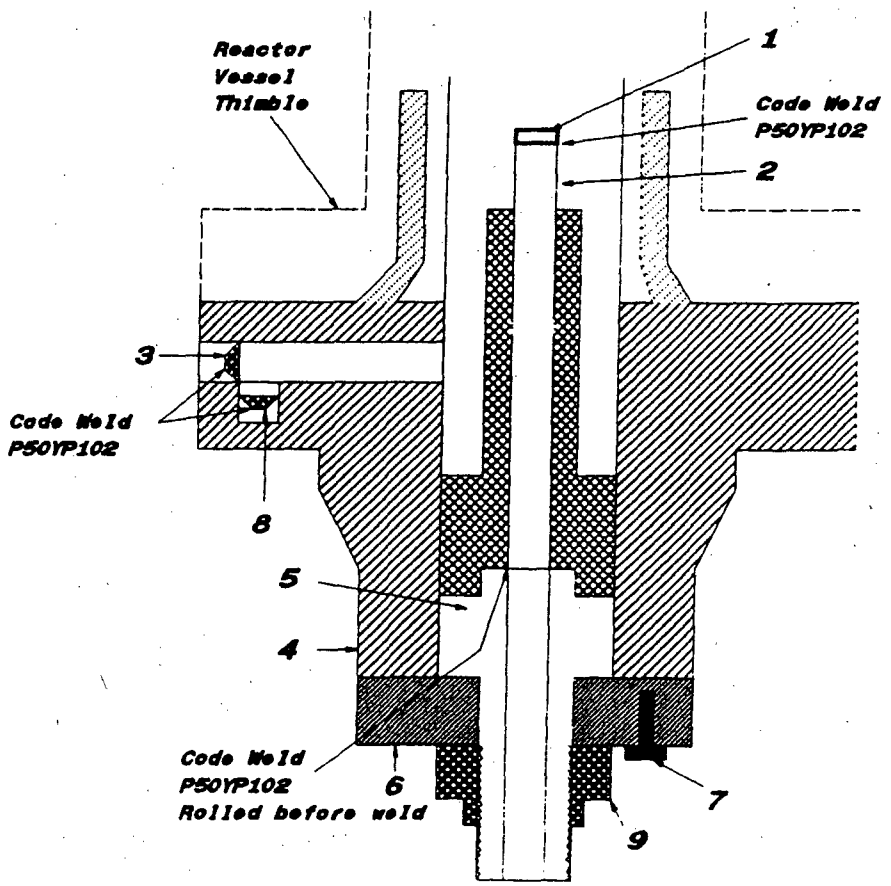

WOT No 01145341 14

ENERGY NORTHWEST
People · Vision · Solutions

FORM NIS-2 OWNER'S REPORT FOR REPAIR/REPLACEMENT ACTIVITY
As Required By The Provisions Of The ASME Code Section XI

1. Owner: Energy Northwest
Address: Columbia Generating Station, North Power Plant Loop, Richland, Washington, 99352
2. Plant: Columbia Generating Station
Address: Columbia Generating Station, North Power Plant Loop, Richland, Washington, 99352

Date: 04/03/2009
Sheet: 1 Of 1
Unit: Not Applicable

3. (a) Work Performed By: Energy Northwest/Scientech
(b) Repair/Replacement Organization P.O. No, Job No, etc.: WO No 01145341/PO No 00327297
(c) Type Code Symbol Stamp: Not Applicable
(d) Certificate Of Authorization No.: Not Applicable
(e) Expiration Date: Not Applicable
4. Identification Of System: Control Rod Drive (CRD)
5. (a) Applicable Construction Code: ASME Section III, Code Class 1 - See Notes For Code Edition, Addenda And Code Cases
(b) Applicable Edition Of ASME Section XI Used For Repair/Replacement Activity: 2001 Edition with 2003 Addenda
(c) Applicable ASME Section XI Case(s): None
6. Identification Of Components

Name Of Component	Name Of Manufacturer	Manufacturer's Serial No	National Board No	Other I.D.	Year Built	Corrected, Removed Or Installed	ASME Code Stamped (Yes Or No) Code Class
CRD	General Electric	A8748	N/A	N/A	1988	See Item 7 Below	Yes, Code Class 1
Piston Tube	General Electric	5131	N/A	N/A	1974	Removed	Yes, Code Class 1
Piston Tube	General Electric	0928	N/A	N/A	1996	Installed	Yes, Code Class 1

7. Description Of Work Performed: Overhauled Control Rod Drive (CRD) assembly Serial No A8748. The overhaul work was performed in accordance with plant procedure PPM No 10.5.4 "Control Rod Drive Overhaul" as follows:

1) Disassembled Control Rod Drive (CRD) assembly for overhaul.
2) Removed existing Piston Tube (PT) assembly Serial No 5131.
3) Installed replacement Piston Tube assembly Serial No 0928.
4) Reinstalled existing Cylinder Tube And Flange (CT&F) assembly Serial No A8748.
5) Reinstalled existing ring flange Serial No 1896.
6) Reinstalled existing piston tube nut Serial No 2058.
7) Reinstalled existing ring flange cap screws.

NOTES -

1) The applicable ASME Code Cases, if any are listed on the ASME Code Data Reports.
2) The existing Piston Tube assembly Serial No 5131 is certified to comply with ASME Section III, Code Class 1, 1971 Edition with no Addenda.
3) The replacement Piston Tube assembly Serial No 0928 is certified to comply with ASME Section III, Code Class 1, 1974 Edition with Winter 1975 Addenda.
4) ASME pressure boundary (retaining) parts and materials such as Cylinder Tube And Flange (CT&F), ring flange, ring flange cap screws and piston tube nut were reinstalled (reused) during CRD overhaul activities with the exception of Piston Tube assembly which was replaced.
5) The entire Control Rod Drive (CRD) assembly is identified by the Cylinder Tube And Flange (CT&F) Serial No A8748.

WOT No 01145341 14

ENERGY NORTHWEST
People · Vision · Solutions

FORM NIS-2 OWNER'S REPORT FOR REPAIR/REPLACEMENT ACTIVITY (Back)

8 Tests Conducted: Hydrostatic [ ] **Pneumatic** [ ] **Nominal Operating Pressure** [ ] **Other** [ ]
Exempt [X] **Test Pressure:** Psig **Test Temperature:** °F

9. Remarks (Applicable Manufacturer's Data Reports to be attached): See attached N-2 Code Data Report for the following CRD part:

1) Replacement Piston Tube assembly Serial No 0928.

CERTIFICATE OF COMPLIANCE

I certify that the statements made in this Owner's Report are correct and that this conforms to the requirements of the ASME Code, Section XI.
Type Code Symbol Stamp: Not Applicable
Certificate Of Authorization No.: Not Applicable
Expiration Date: Not Applicable

Prepared By Kuldip Singh - Program Lead Engineer (PLE) ***Signed By*** Kuldip Singh - Program Lead Engineer (PLE)

Date 4/7/09 ***Date*** 4/7/09

CERTIFICATE OF INSERVICE INSPECTION

I, the undersigned, holding a valid commission issued by the National Board of Boiler and Pressure Vessel Inspectors and the State of Washington ***and employed by*** Hartford Steam Boiler Of Connecticut of Hartford, Connecticut ***have inspected the components described in this Owner's Report during the period*** 10/29/2008 ***to*** 4/7/2009 ***and state to the best of my knowledge and belief, the Owner has performed examinations and taken corrective measures described in this Owner's Report in accordance with the requirements of the ASME Code, Section XI.***
By signing this certificate neither the Inspector nor his employer makes any warranty, expressed or implied, concerning the examinations and corrective measures described in this Owner's Report. Furthermore, neither the Inspector nor his employer shall be liable in any manner for any personal injury or property damage or a loss of any kind arising from or connected with this inspection.

Inspector's Signature ***Commissions*** 13172 WANI
National Board, State, and Endorsements

Date 4/7/2009

WOT No. 01145341 14

FORM N-2 NPT CERTIFICATE HOLDERS' DATA REPORT FOR NUCLEAR PART AND APPURTENANCES*

As required by the Provision of the ASME Code Rules, Section III, Div. I

1. Manufactured & Certified by : General Electric Company Nuclear Energy (GE-NE) Philip Swift 4/6/09.
   3901 Castle Hayne Road, Wilmington, North Carolina 28401
   (Name and Address of NPT Certificate Holder)

   (b) Manufactured for : WNP 2 Richland, Washington 99352
   (Name and Address of N Certificate Holder for completed nuclear component)

2. Identification - Certificate Holder's S/N of Part : 0928 Nat'l Bd. No. N/A

   (a) Constructed According to Drawing No: 798D228G012 Rev 36 Dwg. Prepared by D. L. Peterson

   (b) Description of Part Inspected: Piston Tube Assembly

   (c) Applicable ASME Code: Section III , Edition 1974 , Addenda Date W'75 , Case No. 1361-2 Class 1

3. REMARKS: Standard part for use with Reactor. Hydrostatically tested at 1825 psi, min.
   (Brief description of service for which component was designed)

Sheet 1 of 2

We certify that the statements in this report are correct and this vessel part or appurtenance as defined in the code conforms to the rules of construction of the ASME Code Section III. (The applicable Designed Specification and Stress Report are not the responsibility of the NPT Certificate Holder for parts. An NPT Certification Holder for appurtenances is responsible for furnishing a separate Design Specification and Stress Report if the appurtenance is not included in the component Design Specification and Stress Report).

Date: 03/22/96 Signed GE-NE By
(NPT Certificate Holder) (SC QA Representive)

Certificate of Authorization Expires: 6/16/96 Certification of Authorization No. : NPT N - 1151

Certification of Design for Appurtenance

Design information on file at GE Company, San Jose, California

Stress analysis report on file at GE Company, San Jose, California

DC22A6253 Rev. 2
Design specification certified by B.N. Sridhar Prof. Eng. State Calif. Reg. No. 18345

DC22A6254 Rev 1
Stress analysis report certified by Edward Yoshio Prof. Eng. State Calif. Reg. No. M018646

Certification of Shop Inspection

I, the undersigned, holding a valid commission by the National Board of Boiler and Pressure Inspectors and/or the State or Province of North Carolina and employed by Department of Labor of State of North Carolina have inspected the part of a pressure vessel described in this Partial Data Report on 3/15, 1996, and state that to the best of my knowledge and belief, the NPT Certificate Holder has constructed this part in accordance with the ASME Code Section III.
By signing this certificate, neither the Inspector nor his employer makes any warranty, expressed or implied, concerning the part described in the Partial Data Report. Furthermore, neither the Inspector nor his employer shall be liable in any manner for any personal injury or property damages or a loss of any kind arising from or connected with this inspection.

3/22, 1996 — Date
Inspector's Signature
NC 1231, Ohio, WC 3686 PA — National Board, State, Province And No.

*Supplemental sheets in form of lists, sketches or drawing may be used provided (1) size is 8-1/2" x 11", (2) information in 1-2 on this Data Report is included on each sheet, and (3) each sheet is numbered and number of sheets is recorded in Item 3. "REMARKS".

(07/90)

FORM N-2 (back)

Items 4-8 Incl. to be completed for single wall vessels, jackets vessels, or shells of heat exchangers.

4. Shell: Material _____ T.S. _____ Nominal Thickness ___ in. Corrosion Allowance ___ in. Dia. ___ ft. ___ in. Length ___ ft. ___ in.
(Kind & Spec. No.) (Min. of Range Specified)

5. Seams: Long _____ H.T.[1] _____ R.T. _____ Efficiency _____%
Girth _____ H.T.[1] _____ R.T. _____ No. of Courses _____

6. Heads: (a) Material _____ T.S. _____ (b) Material _____ T.S. _____

	Location (Top Bottom, Ends)	Thickness	Crown Radius	Knuckle Radius	Elliptical Ratio	Concial Apex Angle	Hemispherical Radius	Flat Diameter	Side to Press. (conv. or conc.)
(a)									
(b)									

If removable, bolts used _____ (Material, Spec. No., T.S. Size Number) Other fastening _____ (Describe or attach sketch)

7. Jacket Closure: _____
(Describe as ogee and weld, bar, etc. If bar give dimensions, if bolts, describe or sketch)

Drop Weight _____
Charpy Impact _____ ft-lb

8. Design pressure[2] 1250 psi at 575 °F at temp of _____ °F

Items 9 and 10 to be completed for tube sections

9. Tube Sheets: Stationary. Material _____ (Kind & Spec. No.) Dia. _____ (Subject to pressure) Thickness ___ in. Attachment _____ (Welded, Bolted)
Floating. Material _____ Dia. _____ Thickness ___ in. Attachment _____

10. Tubes: Material _____ O.D. _____ in. Thickness _____ inches or gage. Number _____ Type _____ (Str. or U)

Items 11 - 14 incl. to be completed for inner chambers of jacketed vessels, or channels of heat exchangers.

11. Shell: Material _____ T.S. _____ Nominal Thickness ___ in. Corrosion Allowance ___ in. Dia. ___ ft. ___ in. Length ___ ft. ___ in.
(Kind & Spec. No.) (Min. of Range Specified)

12. Seams: Long _____ H.T.[1] _____ R.T. _____ Efficiency _____%
Girth _____ H.T.[1] _____ R.T. _____ No. of Courses _____

13. Heads: (a) Material _____ T.S. _____ (b) Material _____ T.S. _____

	Location	Thickness	Crown Radius	Knuckle Radius	Elliptical Ratio	Concial Apex Angle	Hemispherical Radius	Flat Diameter	Side to Press. (conv. or conc.)
(a)	Top, bottom, ends								
(b)	Channel								

If removable, bolts used (a)_____ (b)_____ (c)_____ Other fastening _____ (Describe or attach sketch)

Drop Weight _____
Charpy Impact _____ ft-lb

14. Design pressure[2] _____ psi at _____ °F at temp of _____ °F

Items below to be completed for all vessels where applicable.

15. Safety Valve Outlets: Number _____ Size _____ Location _____

16. Nozzles:

Purpose (Inlet, Outlet, Drain)	Number	Dia. or Size	Type	Material	Thickness	Reinforcement Material	How Attached

17. Inspection Openings: Manholes, No. _____ Size _____ Location _____
Handholes, No. _____ Size _____ Location _____
Threaded, No. _____ Size _____ Location _____

18. Supports: Skirt _____ (Yes or No) Lugs _____ (Number) Legs _____ (Number) Other _____ (Describe) Attached _____ (Where & How)

1 - If Postweld Heat-Treated.
2 - List other internal or external pressure with coincident temperature when applicable.

FORM N-2 NPT CERTIFICATE HOLDERS' DATA REPORT FOR NUCLEAR PART AND APPURTENANCES*

As required by the Provision of the ASME Code Rules, Section III, Div. I

WOT No. 01145341 K

1. Manufactured & Certified by : General Electric Company Nuclear Energy (GE-NE)
   3901 Castle Hayne Road, Wilmington, North Carolina 28401
   (Name and Address of NPT Certificate Holder)

   Dilip Sampy 4/6/09.

   (b) Manufactured for : WNP 2 Richland, Washington 99352
   (Name and Address of N Certificate Holder for completed nuclear component)

2. Identification - Certificate Holder's S/N of Part : 0928 Nat'l Bd. No. N/A

   (a) Constructed According to Drawing No: 798D228G012 Rev 36 Dwg. Prepared by D. L. Peterson

   (b) Description of Part Inspected: Piston Tube Assembly

   (c) Applicable ASME Code: Section III , Edition 1974 , Addenda Date W'75 , Case No. 1361-2 Class 1

3. REMARKS: Standard part for use with Reactor. Hydrostatically tested at 1825 psi. min.
   (Brief description of service for which component was designed)

1. Cap 166B9274P001
   SA182 - F316
   3/8" thick x 1 1/16" OD

2. Indicator Tube 167B4908P001
   SA312 - TP316
   3/4" sch 40 - seamless pipe
   0.113" wall thickness
   1.065" max. dia.

3. Plug 159A1176P001
   SA182 - F304
   1/4" thick x 0.812" OD

4. Flange 919D610P001 (719E474)
   SA182 - F304
   3.37" thick x 9 5/8" OD

5. Head 129B3539P005
   SA182 - F304
   7/8" thick x 2.875" dia.

6. Ring Flange 114B5122P002
   SA182 - F304
   1" thick x 5.0" OD x 1.75" ID

7. Cap Screw 117C4516P002
   SA193 - B6
   6 ea. 1/2" dia. on 4 1/8" bolt circle

8. Plug 175A7961P001
   SA182 - F304
   0.38" thick x 1.307" dia.

9. Nut 114B5460P001
   XM - 19 SA479
   1.30" thick x 2.62" dia.

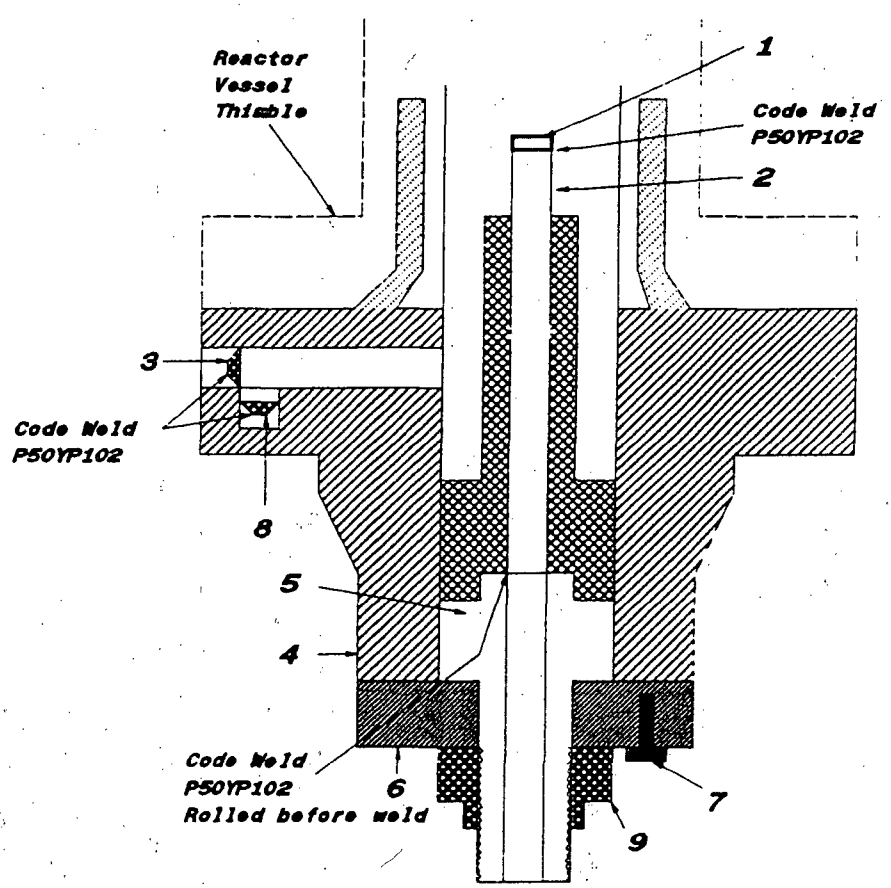

WOT No 01145341 22

ENERGY NORTHWEST
People · Vision · Solutions

FORM NIS-2 OWNER'S REPORT FOR REPAIR/REPLACEMENT ACTIVITY
As Required By The Provisions Of The ASME Code Section XI

Date: 05/14/2009
Sheet: 1 Of 1
Unit: Not Applicable

1. Owner: Energy Northwest
Address: Columbia Generating Station, North Power Plant Loop, Richland, Washington, 99352
2. Plant: Columbia Generating Station
Address: Columbia Generating Station, North Power Plant Loop, Richland, Washington, 99352
3. (a) Work Performed By: Energy Northwest/Scientech
(b) Repair/Replacement Organization P.O. No, Job No, etc.: WO No 01145341/PO No 00327297
(c) Type Code Symbol Stamp: Not Applicable
(d) Certificate Of Authorization No.: Not Applicable
(e) Expiration Date: Not Applicable
4. Identification Of System: Control Rod Drive (CRD)
5. (a) Applicable Construction Code: ASME Section III, Code Class 1 - See Notes For Code Edition, Addenda And Code Cases
(b) Applicable Edition Of ASME Section XI Used For Repair/Replacement Activity: 2001 Edition with 2003 Addenda
(c) Applicable ASME Section XI Case(s): None
6. Identification Of Components

Name Of Component	Name Of Manufacturer	Manufacturer's Serial No	National Board No	Other I.D.	Year Built	Corrected, Removed Or Installed	ASME Code Stamped (Yes Or No) Code Class
CRD	General Electric	A8926	N/A	N/A	1991	See Item 7 Below	Yes, Code Class 1
Piston Tube	General Electric	5958	N/A	N/A	1975	Removed	Yes, Code Class 1
Piston Tube	General Electric	2943	N/A	N/A	1985	Installed	Yes, Code Class 1

7. Description Of Work Performed: Overhauled Control Rod Drive (CRD) assembly Serial No A8926. The overhaul work was performed in accordance with plant procedure PPM No 10.5.4 "Control Rod Drive Overhaul" as follows:

1) Disassembled Control Rod Drive (CRD) assembly for overhaul.
2) Removed existing Piston Tube (PT) assembly Serial No 5958.
3) Installed replacement Piston Tube assembly Serial No 2943.
4) Reinstalled existing Cylinder Tube And Flange (CT&F) assembly Serial No A8926.
5) Reinstalled existing ring flange Serial No 2743.
6) Reinstalled existing piston tube nut Serial No 3067.
7) Reinstalled existing ring flange cap screws.

NOTES -

1) The applicable ASME Code Cases, if any are listed on the ASME Code Data Reports.
2) The existing Piston Tube assembly Serial No 5958 is certified to comply with ASME Section III, Code Class 1, 1971 Edition with no Addenda.
3) The replacement Piston Tube assembly Serial No 2943 is certified to comply with ASME Section III, Code Class 1, 1971 Edition with Summer 1973 Addenda.
4) ASME pressure boundary (retaining) parts and materials such as Cylinder Tube And Flange (CT&F), ring flange, ring flange cap screws and piston tube nut were reinstalled (reused) during CRD overhaul activities with the exception of Piston Tube assembly which was replaced.
5) The entire Control Rod Drive (CRD) assembly is identified by the Cylinder Tube And Flange (CT&F) Serial No A8926.

WOT No 01145341 22

ENERGY NORTHWEST
People · Vision · Solutions

FORM NIS-2 OWNER'S REPORT FOR REPAIR/REPLACEMENT ACTIVITY (Back)

8 Tests Conducted: Hydrostatic [ ] **Pneumatic** [ ] **Nominal Operating Pressure** [ ] **Other** [ ]
Exempt [X] **Test Pressure:** Psig **Test Temperature:** °F

9. Remarks (Applicable Manufacturer's Data Reports to be attached): See attached N-2 Code Data Report for the following CRD part:

1) Replacement Piston Tube assembly Serial No 2943.

CERTIFICATE OF COMPLIANCE

I certify that the statements made in this Owner's Report are correct and that this conforms to the requirements of the ASME Code, Section XI.
Type Code Symbol Stamp: Not Applicable
Certificate Of Authorization No.: Not Applicable
Expiration Date: Not Applicable

Prepared By Kuldip Singh - Program Lead Engineer (PLE) ***Signed By*** Kuldip Singh - Program Lead Engineer (PLE)

Date 5/14/09 ***Date*** 5/14/09.

CERTIFICATE OF INSERVICE INSPECTION

I, the undersigned, holding a valid commission issued by the National Board of Boiler and Pressure Vessel Inspectors and the State of Washington ***and employed by*** Hartford Steam Boiler Of Connecticut of Hartford, Connecticut ***have inspected the components described in this Owner's Report during the period*** 10/29/2008 ***to*** 5/16/2009 ***and state to the best of my knowledge and belief, the Owner has performed examinations and taken corrective measures described in this Owner's Report in accordance with the requirements of the ASME Code, Section XI.***
By signing this certificate neither the Inspector nor his employer makes any warranty, expressed or implied, concerning the examinations and corrective measures described in this Owner's Report. Furthermore, neither the Inspector nor his employer shall be liable in any manner for any personal injury or property damage or a loss of any kind arising from or connected with this inspection.

Inspector's Signature ***Commissions*** 1317Z WANI
National Board, State, and Endorsements

Date 5/16/2009

WOT No. 01145341 22

FORM N-2 NPT CERTIFICATE HOLDERS' DATA REPORT FOR NUCLEAR PART AND APPURTENANCES*

As required by the Provision of the ASME Code Rules, Section III, Div. 1

1. (a) Manufactured by General Electric Co., Castle Hayne Rd., Wilmington, N.C. 5/14/09
(Name and address of NPT Certificate Holder)

(b) Manufactured for ~~STOCK~~ WNP-2
(Name and address of N Certificate Holder for completed nuclear component)

2. Identification-Certificate Holder's Serial No. of Part 2943 Nat'l Bd. No. N/A

(a) Constructed According to Drawing No. 798D228G010 Drawing Prepared by D. L. Peterson

(b) Description of Part Inspected Piston Tube Assembly

(c) Applicable ASME Code: Section III, Edition 1971, Addenda date S'73, Case No. — Class 1

3. Remarks: Standard part for use with reactor.
(Brief description of service for which component was designed)

Hydrostatically tested at 1825 psi.

* Number of Sheets - 2

We certify that the statements made in this report are correct and this vessel part or appurtenance as defined in the Code conforms to the rules of construction of the ASME Code Section III.
(The applicable Design Specification and Stress Report are not the responsibility of the NPT Certificate Holder for parts. An NPT Certificate Holder for appurtenances is responsible for furnishing a separate Design Specification and Stress Report if the appurtenance is not included in the component Design Specification and Stress Report.)

Date 2/18/ 19 85 Signed GE-NEPD-WMD By J. Ettrudenmie
(NPT Certificate Holder)

Certificate of Authorization Expires June 16, 1987 Certificate of Authorization No. NPT N-1151

CERTIFICATION OF DESIGN FOR APPURTENANCE (when applicable)

Design information on file at GENERAL ELECTRIC CO., SAN JOSE, CALIF.

Stress analysis report on file at GENERAL ELECTRIC CO., SAN JOSE, CALIF.

Design specifications certified by Vernon W. Pence Prof. Eng. State Calif. Reg. No. 14488

Stress analysis report certified by Vernon W. Pence Prof. Eng. State Calif. Reg. No. 14488

CERTIFICATE OF SHOP INSPECTION

I, the undersigned, holding a valid commission issued by the National Board of Boiler and Pressure Vessel Inspectors and/or the State or Province of North Carolina and employed by Department of Labor of State of North Carolina have inspected the part of a pressure vessel described in this Partial Data Report on 2/21 19 85, and state that to the best of my knowledge and belief, the NPT Certificate Holder has constructed this part in accordance with the ASME Code Section III.

By signing this certificate, neither the Inspector nor his employer makes any warranty, expressed or implied, concerning the part described in this Partial Data Report. Furthermore, neither the Inspector nor his employer shall be liable in any manner for any personal injury or property damage or a loss of any kind arising from or connected with this inspection.

Date 2/21 19 85

Inspector's Signature

Commissions N.C. 723, PA.WC1766, OHIO
National Board, State, Province and No.

* Supplemental sheets in form of lists, sketches or drawings may be used provided (1) size is 8½" x 11", (2) information in items 1, 2, 3 ...

FORM N-2 (back)

Items 4–8 incl. to be completed for single wall vessels, jackets of jacketed vessels, or shells of heat exchangers.

4. Shell: Material _____ (Kind & Spec. No.) T.S. _____ (Min. of Range Specified) Nominal Thickness ____ in. Corrosion Allowance ____ in. Dia. ____ ft. ____ in. Length ____ ft. ____ in.

S/N 2943

5. Seams: Long _____ H.T.[1] _____ R.T. _____ Efficiency _____ %

Girth _____ H.T.[1] _____ R.T. _____ No. of Courses _____

Kuldip

6. Heads: (a) Material _____ T.S. _____ (b) Material _____ T.S. _____

	Location (Top, bottom, ends)	Thickness	Crown Radius	Knuckle Radius	Elliptical Ratio	Conical Apex Angle	Hemispherical Radius	Flat Diameter	Side to Press (Conv. or Co
(a)									
(b)									

If removable, bolts used _____ (Material, Spec. No., T.S., Size, Number) Other fastening _____ (Describe or attach sketch)

7. Jacket Closure: _____ (Describe as edge and weld, bar, etc. If bar give dimensions, if bolted, describe or sketch)

8. Design pressure[2] 1250 psi at 575 °F

Drop Weight _____
Charpy Impact _____ ft-
at temp. of _____

Items 9 and 10 to be completed for tube sections

9. Tube Sheets: Stationary. Material _____ (Kind & Spec. No.) Dia. _____ (Subject to pressure) Thickness ____ in. Attachment _____ (Welded, Bolted)

Floating. Material _____ Dia. _____ Thickness ____ in. Attachment _____

10. Tubes: Material _____ O.D. ____ in. Thickness _____ inches or gage. Number _____ Type _____ (Str. or U)

Items 11–14 incl. to be completed for inner chambers of jacketed vessels, or channels of heat exchangers.

11. Shell: Material _____ (Kind & Spec. No.) T.S. _____ (Min. of Range Specified) Nominal Thickness ____ in. Corrosion Allowance ____ in. Dia. ____ ft. ____ in. Length ____ ft. ____ in.

12. Seams: Long _____ H.T.[1] _____ R.T. _____ Efficiency _____ %

Girth _____ H.T.[1] _____ R.T. _____ No. of Courses _____

13. Heads (a) Material _____ T.S. _____ (b) Material _____ T.S. _____

	Location	Thickness	Crown Radius	Knuckle Radius	Elliptical Ratio	Conical Apex Angle	Hemispherical Radius	Flat Diameter	Side to Press (Conv. or Cone
(a)	Top, bottom, ends								
(b)	Channel								

If removable, bolts used (a) _____ (b) _____ (c) _____ Other fastening _____ (Describe or attach sketch)

14. Design pressure[2] _____ psi at _____ °F

Drop Weight _____
Charpy Impact _____ ft-lb
at temp. of _____ °

Items below to be completed for all vessels where applicable.

15. Safety Valve Outlets: Number _____ Size _____ Location _____

16. Nozzles:

Purpose (Inlet, Outlet, Drain)	Number	Dia. or Size	Type	Material	Thickness	Reinforcement Material	How Attached

17. Inspection Openings: Manholes, No. _____ Size _____ Location _____
Handholes, No. _____ Size _____ Location _____
Threaded, No. _____ Size _____ Location _____

18. Supports: Skirt _____ (Yes or No) Lugs _____ (Number) Legs _____ (Number) Other _____ (Describe) Attached _____ (Where & How)

WOT No. 0114534122

FORM N-2 NPT CERTIFICATE HOLDERS' DATA REPORT FOR NUCLEAR PARTS AND APPURTENANCES
As required by the Provision of the ASME Code Rules, Section III, Div. I

1. Manufactured & Certified by: GE Company, 2117 Castle Hayne Rd., Wilmington, N.C. 28401
(Name and Address of NPT Certificate Holder)

(b) Manufactured for: WNP-2, RICHLAND, WA. 99352
(Name and Address of N Certificate Holder for completed nuclear component)

2. Identification-Certificate Holders's S/N of Part: 2943 Nat'l Bd. N. N/A

(a) Constructed According to Drawing No: 798D228G010 Dwg. Prepared by D. L. Peterson

(b) Description of Part Inspected: Piston Tube Assembly

(C) Applicable ASME Code: Section III, Edition 1971, Addenda Date S'73, Case No. 5/14/05 Class 1

3. REMARKS: Standard part for use with Reactor. Hydrostatically tested at 1825 psi. min.
(Brief description of service for which component was designed)

Sheet 2 of 2

1. Cap 167A2343P1
SA182-F304
3/8 thick X 1 1/16 OD

2. Indicator Tube 104B1336P3
SA312-TP316
3/4 sch 40-seamless pipe
0.113 wall thickness
1.065 max. dia.

3. Plug 159A1176P1
SA182-F304
1/4 thick x 0.812 OD

4. Flange 919D610P1 (719E474)
SA182-F304
3.37 thick x 9 5/8 OD

5. Head 129B3539P3,P5
SA182-F304
7/8 thick x 2.875 Dia.

6. Ring Flange 114B5122P2
SA182-F304
1" thick x 5.0 OD x 1.75 ID

7. Cap Screw 117C4516P2
SA193-B6
6 ea. 1/2 dia. on 4 1/8 bolt circle

8. Plug 175A7961P1
SA182-F304
0.38 thick x 1.307 dia.

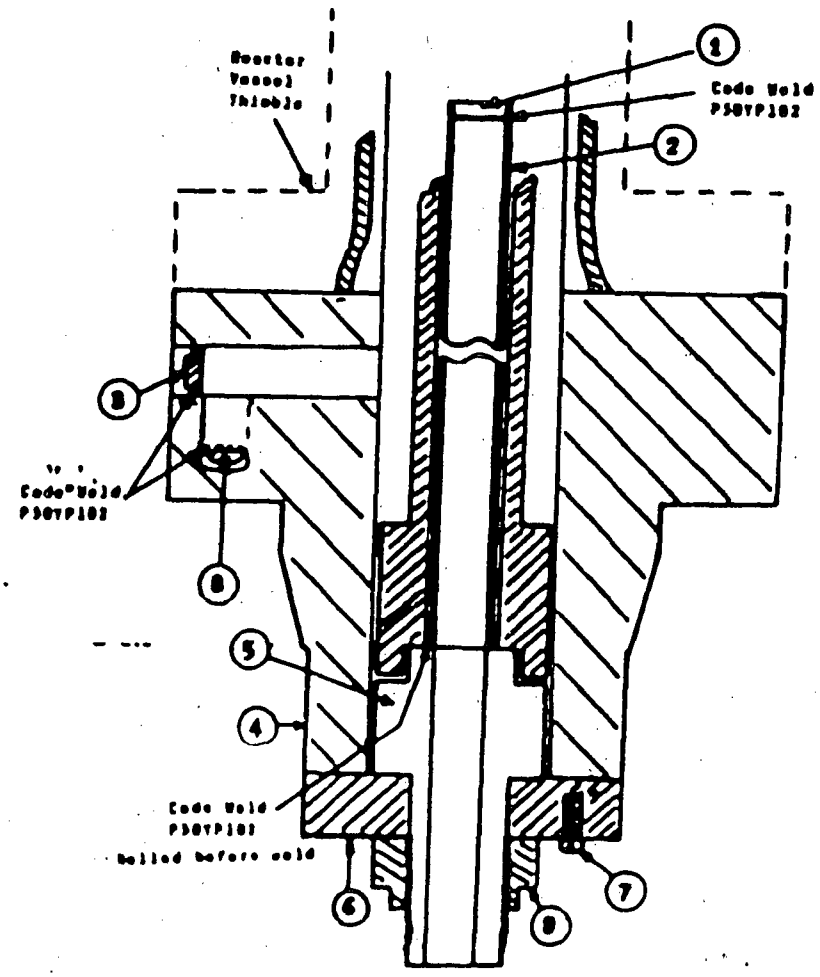

WOT No 01145341 25

ENERGY NORTHWEST
People · Vision · Solutions

FORM NIS-2 OWNER'S REPORT FOR REPAIR/REPLACEMENT ACTIVITY
As Required By The Provisions Of The ASME Code Section XI

1. Owner: Energy Northwest
Address: Columbia Generating Station, North Power Plant Loop, Richland, Washington, 99352
2. Plant: Columbia Generating Station
Address: Columbia Generating Station, North Power Plant Loop, Richland, Washington, 99352

Date: 04/03/2009
Sheet: 1 Of 1
Unit: Not Applicable

3. (a) Work Performed By: Energy Northwest/Scientech
(b) Repair/Replacement Organization P.O. No, Job No, etc.: WO No 01145341/PO No 00327297
(c) Type Code Symbol Stamp: Not Applicable
(d) Certificate Of Authorization No.: Not Applicable
(e) Expiration Date: Not Applicable
4. Identification Of System: Control Rod Drive (CRD)
5. (a) Applicable Construction Code: ASME Section III, Code Class 1 - See Notes For Code Edition, Addenda And Code Cases
(b) Applicable Edition Of ASME Section XI Used For Repair/Replacement Activity: 2001 Edition with 2003 Addenda
(c) Applicable ASME Section XI Case(s): None
6. Identification Of Components

Name Of Component	Name Of Manufacturer	Manufacturer's Serial No	National Board No	Other I.D.	Year Built	Corrected, Removed Or Installed	ASME Code Stamped (Yes Or No) Code Class
CRD	General Electric	7388	N/A	N/A	1975	See Item 7 Below	Yes, Code Class 1
Piston Tube	General Electric	5715	N/A	N/A	1974	Removed	Yes, Code Class 1
Piston Tube	General Electric	1112	N/A	N/A	2005	Installed	Yes, Code Class 1
CT&F	General Electric	7388	N/A	N/A	1975	Removed	Yes, Code Class 1
CT&F	General Electric	A9309	N/A	N/A	1996	Installed	Yes, Code Class 1

7. Description Of Work Performed: Overhauled Control Rod Drive (CRD) assembly Serial No 7388. The overhaul work was performed in accordance with plant procedure PPM No 10.5.4 "Control Rod Drive Overhaul" as follows:

1) Disassembled Control Rod Drive (CRD) assembly for overhaul.
2) Removed existing Piston Tube (PT) assembly Serial No 5715.
3) Installed replacement Piston Tube assembly Serial No 1112.
4) Removed existing Cylinder Tube And Flange (CT&F) assembly Serial No 7388.
5) Installed replacement Cylinder Tube And Flange (CT&F) assembly Serial No A9309.
6) Reinstalled existing ring flange Serial No 2392.
7) Reinstalled existing piston tube nut Serial No 3135.
8) Reinstalled existing ring flange cap screws.

NOTES -

1) The applicable ASME Code Cases, if any are listed on the ASME Code Data Reports.
2) The existing Piston Tube assembly Serial No 5715 is certified to comply with ASME Section III, Code Class 1, 1971 Edition with no Addenda.
3) The replacement Piston Tube assembly Serial No 1112 is certified to comply with ASME Section III, Code Class 1, 1974 Edition with Winter 1975 Addenda.
4) The existing Cylinder Tube And Flange (CT&F) assembly Serial No 7388 is certified to comply with ASME Section III, Code Class 1, 1971 Edition with no Addenda.
5) The replacement Cylinder Tube And Flange (CT&F) assembly Serial No A9309 is certified to comply with ASME Section III, Code Class 1, 1974 Edition with Winter 1975 Addenda.
6) ASME pressure boundary (retaining) parts and materials such as ring flange, ring flange cap screws and piston tube nut were reinstalled (reused) during CRD overhaul activities with the exception of Cylinder Tube And Flange (CT&F) assembly and Piston Tube assembly which were replaced.
7) The entire Control Rod Drive (CRD) assembly is identified by the Cylinder Tube And Flange (CT&F) Serial No A9309.

WOT No 01145341 25

ENERGY NORTHWEST
People · Vision · Solutions

FORM NIS-2 OWNER'S REPORT FOR REPAIR/REPLACEMENT ACTIVITY (Back)

8 Tests Conducted: Hydrostatic [ ] **Pneumatic** [ ] **Nominal Operating Pressure** [ ] **Other** [ ]
Exempt [X] **Test Pressure:** Psig **Test Temperature:** °F

9. Remarks (Applicable Manufacturer's Data Reports to be attached): See attached N-2 Code Data Reports for the following CRD parts:

1) Replacement Piston Tube assembly Serial No 1112.
2) Replacement Cylinder Tube And Flange (CT&F) assembly Serial No A9309.

CERTIFICATE OF COMPLIANCE

I certify that the statements made in this Owner's Report are correct and that this conforms to the requirements of the ASME Code, Section XI.
Type Code Symbol Stamp: Not Applicable
Certificate Of Authorization No.: Not Applicable
Expiration Date: Not Applicable

Prepared By Kuldip Singh - Program Lead Engineer (PLE) ***Signed By*** Kuldip Singh - Program Lead Engineer (PLE)

Date 4/7/09 ***Date*** 4/7/09

CERTIFICATE OF INSERVICE INSPECTION

I, the undersigned, holding a valid commission issued by the National Board of Boiler and Pressure Vessel Inspectors and the State of Washington ***and employed by*** Hartford Steam Boiler Of Connecticut of Hartford, Connecticut ***have inspected the components described in this Owner's Report during the period*** 10/29/2008 ***to*** 4/7/2009 ***and state to the best of my knowledge and belief, the Owner has performed examinations and taken corrective measures described in this Owner's Report in accordance with the requirements of the ASME Code, Section XI.***
By signing this certificate neither the Inspector nor his employer makes any warranty, expressed or implied, concerning the examinations and corrective measures described in this Owner's Report. Furthermore, neither the Inspector nor his employer shall be liable in any manner for any personal injury or property damage or a loss of any kind arising from or connected with this inspection.

Inspector's Signature ***Commissions*** 13172 WANI
National Board, State, and Endorsements

Date 4/7/2009

WOT No. 01145341 25

FORM N-2 CERTIFICATE HOLDERS' DATA REPORT FOR NUCLEAR PART AND APPURTENANCES*

As required by the Provision of the ASME code Rules, Section III, Division I

Dulaip Singh

4/6/09.

1. Manufactured and certified by *General Electric Company Nuclear Energy (GE-NE)*
3901 Castle Hayne Road, Wilmington, North Carolina 28401
(Name and address of NPT Certificate Holder)

(b) Manufactured for COLUMBIA RICHLAND, WA. 99352
(Name and address of N Certificate Holder for completed nuclear component)

2. Identification - Certificate Holder's S/N of Part 1112 Nat'l Bd. No. N/A

(a) Constructed According to Drawing No. 798D228G012,REV.38 Prepared by P. PANSOY

(b) Description of Part Inspected PISTON TUBE ASSEMBLY

(c) Applicable ASME Code: Section III, Edition 1974 , Addenda Date W'75 , Case No. 1361-2 , Class 1

3. Remarks: STANDARD PART FOR USE WITH REACTOR. HYDROSTATICALLY TESTED AT 1900 PSI.MIN.
(Brief description of service for which component was designed)

We certify that the statements in this report are correct and this vessel part or appurtenance as defined in the code conforms to the rules of construction of the ASME Code Section III. (The applicable Designed Specification and Stress Report are not the responsibility of the NPT Certificate Holder for parts. An NPT Certification Holder for appurtenances is responsible for furnishing a separate Design Specification and Stress Report if the appurtenances is not included in the component Design Specification and Stress Report).

Date 7/13/05 Signed GE-NE (NPT Certificate Holder) By (SCQ Representative)

Certificate of Authorization Expires 6/16/2008 Certificate of Authorization No. NPT N-1151

CERTIFICATION OF DESIGN FOR APPURTENANCE

Design information on file at GE COMPANY, SAN JOSE, CALIFORNIA

Stress analysis report on file at GE COMPANY, SAN JOSE, CALIFORNIA

DC22A6253 Rev. 2
Design specification certified by B. N. SRIDHAR Prof. Eng. State CALIF. Reg. No. 18345

23A4920 Rev. 2
Stress analysis report certified by E. Y. GIBO Prof. Eng. State CALIF. Reg. No. M18646

CERTIFICATION OF SHOP INSPECTION

I, the undersigned, holding a valid commission by the National Board of Boiler and Pressure Inspectors and/or the State or Province of North Carolina and employed by Department of Labor of State of North Carolina have inspected the part of a pressure vessel described in this Partial Data Report on 7-13-2005, and state that to the best of my knowledge and belief, the NPT Certificate Holder has constructed this part in accordance with the ASME Code Section III.

By signing this certificate, neither the Inspector nor his employer makes any warranty, expressed or implied, concerning the part described in the Partial Data Report. Furthermore, neither the Inspector nor his employer shall be liable in any manner for any personal injury or property damages or a loss of any kind arising from or connected with this inspection.

7-13-2005 Date — Inspector's Signature — NB 11725 ABN NS National Board, State, Province and No.

*Supplemental sheets in form of lists, sketches or drawing may be used provided (1) size is 8 ½ " x 11", (2) information in 1-2 on the Data Report is included on each sheet, and (3) each sheet is numbered and number of sheets is recorded in item 3 "Remarks".

WOT No. 01145341 2

FORM N-2 NPT CERTIFICATE HOLDERS' DATA REPORT FOR NUCLE. . PART AND APPURTENANCES*

As required by the Provision of the ASME Code Rules, Section III, Div. I

1. Manufactured & Certified by : General Electric Company Nuclear Energy (GE-NE)
   3901 Castle Hayne Road, Wilmington, North Carolina 28401
   (Name and Address of NPT Certificate Holder)

   (b) Manufactured for : WNP 2 Richland, Washington 99352
   (Name and Address of N Certificate Holder for completed nuclear component)

2. Identification - Certificate Holder's S/N of Part : A9309 Nat'l Bd. No. N/A

   (a) Constructed According to Drawing No: 919D258G003 Rev 18 Dwg. Prepared by D. L. Peterson

   (b) Description of Part Inspected: Cylinder Tube & Flange

   (c) Applicable ASME Code: Section III , Edition 1974 , Addenda Date W'75 , Case No. 1361-2 Class 1

3. REMARKS: Standard part for use with Reactor. Hydrostatically tested at 1825 psi. min.
   (Brief description of service for which component was designed)

4/6/09.

Sheet 1 of 2

We certify that the statements in this report are correct and this vessel part or appurtenance as defined in the code conforms to the rules of construction of the ASME Code Section III. (The applicable Designed Specification and Stress Report are not the responsibility of the NPT Certificate Holder for parts. An NPT Certification Holder for appurtenances is responsible for furnishing a separate Design Specification and Stress Report if the appurtenance is not included in the component Design Specification and Stress Report).

Date: 03/28/96 Signed GE-NE (NPT Certificate Holder) By CSBazzett (SC QA Representive)

Certificate of Authorization Expires: 6/16/96 Certification of Authorization No. : NPT N - 1151

Certification of Design for Appurtenance

Design information on file at GE Company, San Jose, California

Stress analysis report on file at GE Company, San Jose, California

DC22A6253 Rev. 2
Design specification certified by B.N. Sridhar Prof. Eng. State Calif. Reg. No. 18345

DC22A6254 Rev 1
Stress analysis report certified by Edward Yoshio Prof. Eng. State Calif. Reg. No. M018646

Certification of Shop Inspection

I, the undersigned, holding a valid commission by the National Board of Boiler and Pressure Inspectors and/or the State or Province of North Carolina and employed by Department of Labor of State of North Carolina have inspected the part of a pressure vessel described in this Partial Data Report on 3-29-, 96, and state that to the best of my knowledge and belief, the NPT Certificate Holder has constructed this part in accordance with the ASME Code Section III.
By signing this certificate, neither the Inspector nor his employer makes any warranty, expressed or implied, concerning the part described in the Partial Data Report. Furthermore, neither the Inspector nor his employer shall be liable in any manner for any personal injury or property damages or a loss of any kind arising from or connected with this inspection.

3-29, 96 — Date
Inspector's Signature
NC 856 — National Board, State, Province And No.

Supplemental sheets in form of lists, sketches or drawing may be used provided (1) size is 8-1/2" x 11", (2) information in 1-2 on this Data Report is included on each sheet, and (3) each sheet is numbered and number of sheets is recorded in Item 3. "REMARKS".

(07/90)

FORM N-2 (back)

Items 4-8 Incl. to be completed for single wall vessels, jackets vessels, or shells of heat exchangers.

4. Shell: Material _____ T.S. _____ Nominal Thickness ___ in. Corrosion Allowance ___ in. Dia. ___ ft. ___ in. Length ___ ft. ___ in.
(Kind & Spec. No.) (Min. of Range Specified)

5. Seams: Long _____ H.T.[1] _____ R.T. _____ Efficiency _____%
Girth _____ H.T.[1] _____ R.T. _____ No. of Courses _____

6. Heads: (a) Material _____ T.S. _____ (b) Material _____ T.S. _____

	Location (Top Bottom, Ends)	Thickness	Crown Radius	Knuckle Radius	Elliptical Ratio	Concial Apex Angle	Hemispherical Radius	Flat Diameter	Side to Press. (conv. or conc.)
(a)									
(b)									

If removable, bolts used _____ (Material, Spec. No., T.S. Size Number) Other fastening _____ (Describe or attach sketch)

7. Jacket Closure: _____
(Describe as ogee and weld, bar, etc. If bar give dimensions, if bolts, describe or sketch)

Drop Weight _____
Charpy Impact _____ ft-lb

8. Design pressure[2] 1250 psi at 575 °F at temp of _____ °F

Items 9 and 10 to be completed for tube sections

9. Tube Sheets: Stationary. Material _____ (Kind & Spec. No.) Dia. _____ (Subject to pressure) Thickness ___ in. Attachment _____ (Welded, Bolted)
Floating. Material _____ Dia. _____ Thickness ___ in. Attachment _____

10. Tubes: Material _____ O.D. _____ in. Thickness _____ inches or gage. Number _____ Type _____ (Str. or U)

Items 11 - 14 incl. to be completed for inner chambers of jacketed vessels, or channels of heat exchangers.

11. Shell: Material _____ T.S. _____ Nominal Thickness ___ in. Corrosion Allowance ___ in. Dia. ___ ft. ___ in. Length ___ ft. ___ in.
(Kind & Spec. No.) (Min. of Range Specified)

12. Seams: Long _____ H.T.[1] _____ R.T. _____ Efficiency _____%
Girth _____ H.T.[1] _____ R.T. _____ No. of Courses _____

13. Heads: (a) Material _____ T.S. _____ (b) Material _____ T.S. _____

	Location	Thickness	Crown Radius	Knuckle Radius	Elliptical Ratio	Concial Apex Angle	Hemispherical Radius	Flat Diameter	Side to Press. (conv. or conc.)
(a)	Top, bottom, ends								
(b)	Channel								

If removable, bolts used (a)_____ (b)_____ (c)_____ Other fastening _____ (Describe or attach sketch)

Drop Weight _____
Charpy Impact _____ ft-lb

14. Design pressure[2] _____ psi at _____ °F at temp of _____ °F

Items below to be completed for all vessels where applicable.

15. Safety Valve Outlets: Number _____ Size _____ Location _____

16. Nozzles:

Purpose (Inlet, Outlet, Drain)	Number	Dia. or Size	Type	Material	Thickness	Reinforcement Material	How Attached

17. Inspection Openings: Manholes, No. _____ Size _____ Location _____
Handholes, No. _____ Size _____ Location _____
Threaded, No. _____ Size _____ Location _____

18. Supports: Skirt _____ (Yes or No) Lugs _____ (Number) Legs _____ (Number) Other _____ (Describe) Attached _____ (Where & How)

1 - If Postweld Heat-Treated.
2 - List other internal or external pressure with coincident temperature when applicable.

FORM N-2 NPT CERTIFICA' ,OLDERS' DATA REPORT FOR NUCLE/ 'ART AND APPURTENANCES*
As required by the Provision of the ASME Code Rule., Section III, Div. I

WOT No. 0114 5341 25

1. Manufactured & Certified by : General Electric Company Nuclear Energy (GE-NE)
3901 Castle Hayne Road, Wilmington, North Carolina 28401
(Name and Address of NPT Certificate Holder)

Philip Ewe's 4/6/09.

(b) Manufactured for : WNP 2 Richland, Washington 99352
(Name and Address of N Certificate Holder for completed nuclear component)

2. Identification - Certificate Holder's S/N of Part : A9309 Nat'l Bd. No. N/A

(a) Constructed According to Drawing No: 919D258G003 Rev 18 Dwg. Prepared by D. L. Peterson

(b) Description of Part Inspected: Cylinder Tube & Flange

(c) Applicable ASME Code: Section III , Edition 1974 , Addenda Date W'75 , Case No. 1361-2 Class 1

3. REMARKS: Standard part for use with Reactor. Hydrostatically tested at 1825 psi. min.
(Brief description of service for which component was designed)

1. Cap 166B9274P001
SA182 - F316
3/8" thick x 1 1/16" OD

2. Indicator Tube 167B4908P001
SA312 - TP316
3/4" sch 40 - seamless pipe
0.113" wall thickness
1.065" max. dia.

3. Plug 159A1176P001
SA182 - F304
1/4" thick x 0.812" OD

4. Flange 919D610P001 (719E474)
SA182 - F304
3.37" thick x 9 5/8" OD

5. Head 129B3539P005
SA182 - F304
7/8" thick x 2.875" dia.

6. Ring Flange 114B5122P002
SA182 - F304
1" thick x 5.0" OD x 1.75" ID

7. Cap Screw 117C4516P002
SA193 - B6
6 ea. 1/2" dia. on 4 1/8" bolt circle

8. Plug 175A7961P001
SA182 - F304
0.38" thick x 1.307" dia.

9. Nut 114B5460P001
XM - 19 SA479
1.30" thick x 2.62" dia.

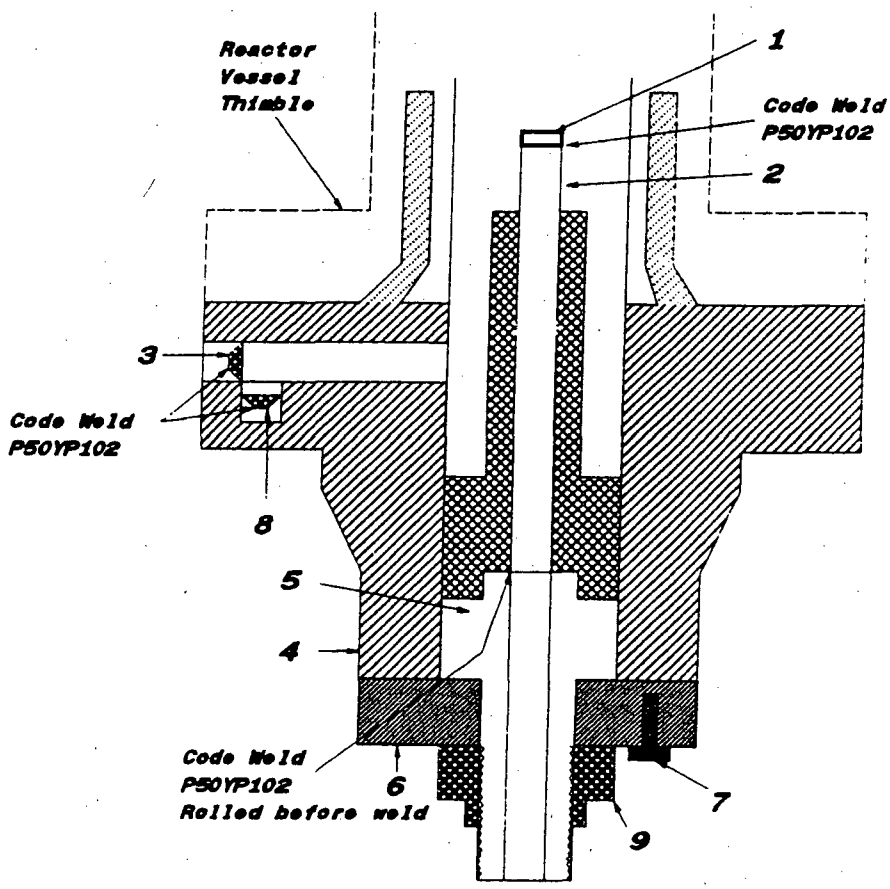

WOT No 01145341 26

ENERGY NORTHWEST
People · Vision · Solutions

FORM NIS-2 OWNER'S REPORT FOR REPAIR/REPLACEMENT ACTIVITY
As Required By The Provisions Of The ASME Code Section XI

1. Owner: Energy Northwest
Address: Columbia Generating Station, North Power Plant Loop, Richland, Washington, 99352
2. Plant: Columbia Generating Station
Address: Columbia Generating Station, North Power Plant Loop, Richland, Washington, 99352

Date: 04/03/2009
Sheet: 1 Of 1
Unit: Not Applicable

3. (a) Work Performed By: Energy Northwest/Scientech
(b) Repair/Replacement Organization P.O. No, Job No, etc.: WO No 01145341/PO No 00327297
(c) Type Code Symbol Stamp: Not Applicable
(d) Certificate Of Authorization No.: Not Applicable
(e) Expiration Date: Not Applicable
4. Identification Of System: Control Rod Drive (CRD)
5. (a) Applicable Construction Code: ASME Section III, Code Class 1 - See Notes For Code Edition, Addenda And Code Cases
(b) Applicable Edition Of ASME Section XI Used For Repair/Replacement Activity: 2001 Edition with 2003 Addenda
(c) Applicable ASME Section XI Case(s): None
6. Identification Of Components

Name Of Component	Name Of Manufacturer	Manufacturer's Serial No	National Board No	Other I.D.	Year Built	Corrected, Removed Or Installed	ASME Code Stamped (Yes Or No) Code Class
CRD	General Electric	5393	N/A	N/A	1974	See Item 7 Below	Yes, Code Class 1
Piston Tube	General Electric	4804	N/A	N/A	1974	Removed	Yes, Code Class 1
Piston Tube	General Electric	1114	N/A	N/A	2005	Installed	Yes, Code Class 1
CT&F	General Electric	5393	N/A	N/A	1974	Removed	Yes, Code Class 1
CT&F	General Electric	A9319	N/A	N/A	1996	Installed	Yes, Code Class 1

7. Description Of Work Performed: Overhauled Control Rod Drive (CRD) assembly Serial No 5393. The overhaul work was performed in accordance with plant procedure PPM No 10.5.4 "Control Rod Drive Overhaul" as follows:

1) Disassembled Control Rod Drive (CRD) assembly for overhaul.
2) Removed existing Piston Tube (PT) assembly Serial No 4804.
3) Installed replacement Piston Tube assembly Serial No 1114.
4) Removed existing Cylinder Tube And Flange (CT&F) assembly Serial No 5393.
5) Installed replacement Cylinder Tube And Flange (CT&F) assembly Serial No A9319.
6) Reinstalled existing ring flange Serial No 2066.
7) Reinstalled existing piston tube nut Serial No 2381.
8) Reinstalled existing ring flange cap screws.

NOTES -

1) The applicable ASME Code Cases, if any are listed on the ASME Code Data Reports.
2) The existing Piston Tube assembly Serial No 4804 is certified to comply with ASME Section III, Code Class 1, 1971 Edition with no Addenda.
3) The replacement Piston Tube assembly Serial No 1114 is certified to comply with ASME Section III, Code Class 1, 1974 Edition with Winter 1975 Addenda.
4) The existing Cylinder Tube And Flange (CT&F) assembly Serial No 5393 is certified to comply with ASME Section III, Code Class 1, 1971 Edition with no Addenda.
5) The replacement Cylinder Tube And Flange (CT&F) assembly Serial No A9319 is certified to comply with ASME Section III, Code Class 1, 1974 Edition with Winter 1975 Addenda.
6) ASME pressure boundary (retaining) parts and materials such as ring flange, ring flange cap screws and piston tube nut were reinstalled (reused) during CRD overhaul activities with the exception of Cylinder Tube And Flange (CT&F) assembly and Piston Tube assembly which were replaced.
7) The entire Control Rod Drive (CRD) assembly is identified by the Cylinder Tube And Flange (CT&F) Serial No A9319.

WOT No 01145341 26

ENERGY NORTHWEST
People · Vision · Solutions

FORM NIS-2 OWNER'S REPORT FOR REPAIR/REPLACEMENT ACTIVITY (Back)

8 Tests Conducted: Hydrostatic [ ] **Pneumatic** [ ] **Nominal Operating Pressure** [ ] **Other** [ ]
Exempt [X] **Test Pressure:** Psig **Test Temperature:** °F

9. Remarks (Applicable Manufacturer's Data Reports to be attached): See attached N-2 Code Data Reports for the following CRD parts:

1) Replacement Piston Tube assembly Serial No 1114.
2) Replacement Cylinder Tube And Flange (CT&F) assembly Serial No A9319.

CERTIFICATE OF COMPLIANCE

I certify that the statements made in this Owner's Report are correct and that this conforms to the requirements of the ASME Code, Section XI.
Type Code Symbol Stamp: Not Applicable
Certificate Of Authorization No.: Not Applicable
Expiration Date: Not Applicable

Prepared By Kuldip Singh - Program Lead Engineer (PLE) ***Signed By*** Kuldip Singh - Program Lead Engineer (PLE)

Date 4/7/09 ***Date*** 4/7/09

CERTIFICATE OF INSERVICE INSPECTION

I, the undersigned, holding a valid commission issued by the National Board of Boiler and Pressure Vessel Inspectors and the State of Washington ***and employed by*** Hartford Steam Boiler Of Connecticut of Hartford, Connecticut ***have inspected the components described in this Owner's Report during the period*** 10/29/2008 ***to*** 4/8/2009 ***and state to the best of my knowledge and belief, the Owner has performed examinations and taken corrective measures described in this Owner's Report in accordance with the requirements of the ASME Code, Section XI.***
By signing this certificate neither the Inspector nor his employer makes any warranty, expressed or implied, concerning the examinations and corrective measures described in this Owner's Report. Furthermore, neither the Inspector nor his employer shall be liable in any manner for any personal injury or property damage or a loss of any kind arising from or connected with this inspection.

Inspector's Signature ***Commissions*** 13172 WANI
National Board, State, and Endorsements

Date 4/8/2009

WOT NO. 01145341 26

FORM N-2 CERTIFICATE HOLDERS' DATA REPORT FOR NUCLEAR PART AND APPURTENANCES*

As required by the Provision of the ASME code Rules, Section III, Division I

4/6/09

1. Manufactured and certified by *General Electric Company Nuclear Energy (GE-NE)*
3901 Castle Hayne Road, Wilmington, North Carolina 28401
(Name and address of NPT Certificate Holder)

(b) Manufactured for COLUMBIA RICHLAND, WA. 99352
(Name and address of N Certificate Holder for completed nuclear component)

2. Identification - Certificate Holder's S/N of Part 1114 Nat'l Bd. No. N/A

(a) Constructed According to Drawing No. 798D228G012,REV.38 Prepared by P. PANSOY

(b) Description of Part Inspected PISTON TUBE ASSEMBLY

(c) Applicable ASME Code: Section III, Edition 1974 , Addenda Date W'75 , Case No. 1361-2 , Class 1

3. Remarks: STANDARD PART FOR USE WITH REACTOR. HYDROSTATICALLY TESTED AT 1900 PSI.MIN.
(Brief description of service for which component was designed)

We certify that the statements in this report are correct and this vessel part or appurtenance as defined in the code conforms to the rules of construction of the ASME Code Section III. (The applicable Designed Specification and Stress Report are not the responsibility of the NPT Certificate Holder for parts. An NPT Certification Holder for appurtenances is responsible for furnishing a separate Design Specification and Stress Report if the appurtenances is not included in the component Design Specification and Stress Report).

Date 7/13/05 Signed GE-NE By
(NPT Certificate Holder) (SCQ Representative)

Certificate of Authorization Expires 6/16/2008 Certificate of Authorization No. NPT N-1151

CERTIFICATION OF DESIGN FOR APPURTENANCE

Design information on file at GE COMPANY, SAN JOSE, CALIFORNIA

Stress analysis report on file at GE COMPANY, SAN JOSE, CALIFORNIA

DC22A6253 Rev. 2
Design specification certified by B. N. SRIDHAR Prof. Eng. State CALIF. Reg. No. 18345

23A4920 Rev. 2
Stress analysis report certified by E. Y. GIBO Prof. Eng. State CALIF. Reg. No. M18646

CERTIFICATION OF SHOP INSPECTION

I, the undersigned, holding a valid commission by the National Board of Boiler and Pressure Inspectors and/or the State or Province of North Carolina and employed by Department of Labor of State of North Carolina have inspected the part of a pressure vessel described in this Partial Data Report on 7-13-2005 and state that to the best of my knowledge and belief, the NPT Certificate Holder has constructed this part in accordance with the ASME Code Section III.

By signing this certificate, neither the Inspector nor his employer makes any warranty, expressed or implied, concerning the part described in the Partial Data Report. Furthermore, neither the Inspector nor his employer shall be liable in any manner for any personal injury or property damages or a loss of any kind arising from or connected with this inspection.

7-13-2005 Clifford C. Dautrich NB 11725 ABN NS
Date Inspector's Signature National Board, State, Province and No.

*Supplemental sheets in form of lists, sketches or drawing may be used provided (1) size is 8 ½ " x 11", (2) information in 1-2 on the Data Report is included on each sheet, and (3) each sheet is numbered and number of sheets is recorded in item 3 "Remarks".

W07 01145341 26

FORM N-2 NPT CERTIFICATE HOLDERS' DATA REPORT FOR NUCLEAR PART AND APPURTENANCES*
As required by the Provision of the ASME Code Rules, Section III, Div. I

Philip Lewis 4/6/09.

1. Manufactured & Certified by : General Electric Company Nuclear Energy (GE-NE)
3901 Castle Hayne Road, Wilmington, North Carolina 28401
(Name and Address of NPT Certificate Holder)

(b) Manufactured for : WNP 2 Richland, Washington 99352
(Name and Address of N Certificate Holder for completed nuclear component)

2. Identification - Certificate Holder's S/N of Part : A9319 Nat'l Bd. No. N/A

(a) Constructed According to Drawing No: 919D258G003 Rev 18 Dwg. Prepared by D. L. Peterson

(b) Description of Part Inspected: Cylinder Tube & Flange

(c) Applicable ASME Code: Section III , Edition 1974 , Addenda Date W'75 , Case No. 1361-2 Class 1

3. REMARKS: Standard part for use with Reactor. Hydrostatically tested at 1825 psi. min.
(Brief description of service for which component was designed)

Sheet 1 of 2

We certify that the statements in this report are correct and this vessel part or appurtenance as defined in the code conforms to the rules of construction of the ASME Code Section III. (The applicable Designed Specification and Stress Report are not the responsibility of the NPT Certificate Holder for parts. An NPT Certification Holder for appurtenances is responsible for furnishing a separate Design Specification and Stress Report if the appurtenance is not included in the component Design Specification and Stress Report).

Date: 03/28/96 Signed GE-NE (NPT Certificate Holder) By C S Baggett (SC QA Representive)

Certificate of Authorization Expires: 6/16/96 Certification of Authorization No. : NPT N - 1151

Certification of Design for Appurtenance

Design information on file at GE Company, San Jose, California

Stress analysis report on file at GE Company, San Jose, California

DC22A6253 Rev. 2
Design specification certified by B.N. Sridhar Prof. Eng. State Calif. Reg. No. 18345

DC22A6254 Rev 1
Stress analysis report certified by Edward Yoshio Prof. Eng. State Calif. Reg. No. M018646

Certification of Shop Inspection

I, the undersigned, holding a valid commission by the National Board of Boiler and Pressure Inspectors and/or the State or Province of North Carolina and employed by Department of Labor of State of North Carolina have inspected the part of a pressure vessel described in this Partial Data Report on 3-29-, 96, and state that to the best of my knowledge and belief, the NPT Certificate Holder has constructed this part in accordance with the ASME Code Section III.
By signing this certificate, neither the Inspector nor his employer makes any warranty, expressed or implied, concerning the part described in the Partial Data Report. Furthermore, neither the Inspector nor his employer shall be liable in any manner for any personal injury or property damages or a loss of any kind arising from or connected with this inspection.

3-29-, 96 Thomas Fu NC 856
Date Inspector's Signature National Board, State, Province And No.

Supplemental sheets in form of lists, sketches or drawing may be used provided (1) size is 8-1/2" x 11", (2) information in 1-2 on this Data Report is included on each sheet, and (3) each sheet is numbered and number of sheets is recorded in Item 3. "REMARKS".

(07/90)

FORM N-2 (back)

Items 4-8 Incl. to be completed for single wall vessels, jackets vessels, or shells of heat exchangers.

4. Shell: Material _____ T.S. _____ Nominal Thickness ___ in. Corrosion Allowance ___ in. Dia. ___ ft. ___ in. Length ___ ft. ___ in.
(Kind & Spec. No.) (Min. of Range Specified)

5. Seams: Long _____ H.T.[1] _____ R.T. _____ Efficiency _____%
Girth _____ H.T.[1] _____ R.T. _____ No. of Courses _____

6. Heads: (a) Material _____ T.S. _____ (b) Material _____ T.S. _____

	Location (Top Bottom, Ends)	Thickness	Crown Radius	Knuckle Radius	Elliptical Ratio	Concial Apex Angle	Hemispherical Radius	Flat Diameter	Side to Press. (conv. or conc.)
(a)									
(b)									

If removable, bolts used _____ (Material, Spec. No., T.S. Size Number) Other fastening _____ (Describe or attach sketch)

7. Jacket Closure: _____
(Describe as ogee and weld, bar, etc. If bar give dimensions, if bolts, describe or sketch)

Drop Weight _____
Charpy Impact _____ ft-lb

8. Design pressure[2] 1250 psi at 575 °F at temp of _____ °F

Items 9 and 10 to be completed for tube sections

9. Tube Sheets: Stationary. Material _____ (Kind & Spec. No.) Dia. _____ (Subject to pressure) Thickness ___ in. Attachment _____ (Welded, Bolted)
Floating. Material _____ Dia. _____ Thickness ___ in. Attachment _____

10. Tubes: Material _____ O.D. _____ in. Thickness _____ inches or gage. Number _____ Type _____ (Str. or U)

Items 11 - 14 incl. to be completed for inner chambers of jacketed vessels, or channels of heat exchangers.

11. Shell: Material _____ T.S. _____ Nominal Thickness ___ in. Corrosion Allowance ___ in. Dia. ___ ft. ___ in. Length ___ ft. ___ in.
(Kind & Spec. No.) (Min. of Range Specified)

12. Seams: Long _____ H.T.[1] _____ R.T. _____ Efficiency _____%
Girth _____ H.T.[1] _____ R.T. _____ No. of Courses _____

13. Heads: (a) Material _____ T.S. _____ (b) Material _____ T.S. _____

	Location	Thickness	Crown Radius	Knuckle Radius	Elliptical Ratio	Concial Apex Angle	Hemispherical Radius	Flat Diameter	Side to Press. (conv. or conc.)
(a)	Top, bottom, ends								
(b)	Channel								

If removable, bolts used (a)_____ (b)_____ (c)_____ Other fastening _____ (Describe or attach sketch)

Drop Weight _____
Charpy Impact _____ ft-lb

14. Design pressure[2] _____ psi at _____ °F at temp of _____ °F

Items below to be completed for all vessels where applicable.

15. Safety Valve Outlets: Number _____ Size _____ Location _____

16. Nozzles:

Purpose (Inlet, Outlet, Drain)	Number	Dia. or Size	Type	Material	Thickness	Reinforcement Material	How Attached

17. Inspection Openings: Manholes, No. _____ Size _____ Location _____
Handholes, No. _____ Size _____ Location _____
Threaded, No. _____ Size _____ Location _____

18. Supports: Skirt _____ (Yes or No) Lugs _____ (Number) Legs _____ (Number) Other _____ (Describe) Attached _____ (Where & How)

1 - If Postweld Heat-Treated.
2 - List other internal or external pressure with coincident temperature when applicable.

WOT No. 01145341 26

FORM N-2 NPT CERTIFICA HOLDERS' DATA REPORT FOR NUCLE PART AND APPURTENANCES*
As required by the Provision of the ASME Code Rules, Section III, Div. I

Philip Sims 4/6/09.

1. Manufactured & Certified by : General Electric Company Nuclear Energy (GE-NE)
3901 Castle Hayne Road, Wilmington, North Carolina 28401
(Name and Address of NPT Certificate Holder)

(b) Manufactured for : WNP 2 Richland, Washington 99352
(Name and Address of N Certificate Holder for completed nuclear component)

2. Identification - Certificate Holder's S/N of Part : A9319 Nat'l Bd. No. N/A

(a) Constructed According to Drawing No: 919D258G003 Rev 18 Dwg. Prepared by D. L. Peterson

(b) Description of Part Inspected: Cylinder Tube & Flange

(c) Applicable ASME Code: Section III , Edition 1974 , Addenda Date W'75 , Case No. 1361-2 Class 1

3. REMARKS: Standard part for use with Reactor. Hydrostatically tested at 1825 psi. min.
(Brief description of service for which component was designed)

Sheet 2 of 2

1. Cap 166B9274P001
SA182 - F316
3/8" thick x 1 1/16" OD

2. Indicator Tube 167B4908P001
SA312 - TP316
3/4" sch 40 - seamless pipe
0.113" wall thickness
1.065" max. dia.

3. Plug 159A1176P001
SA182 - F304
1/4" thick x 0.812" OD

4. Flange 919D610P001 (719E474)
SA182 - F304
3.37" thick x 9 5/8" OD

5. Head 129B3539P005
SA182 - F304
7/8" thick x 2.875" dia.

6. Ring Flange 114B5122P002
SA182 - F304
1" thick x 5.0" OD x 1.75" ID

7. Cap Screw 117C4516P002
SA193 - B6
6 ea. 1/2" dia. on 4 1/8" bolt circle

8. Plug 175A7961P001
SA182 - F304
0.38" thick x 1.307" dia.

9. Nut 114B5460P001
XM - 19 SA479
1.30" thick x 2.62" dia.

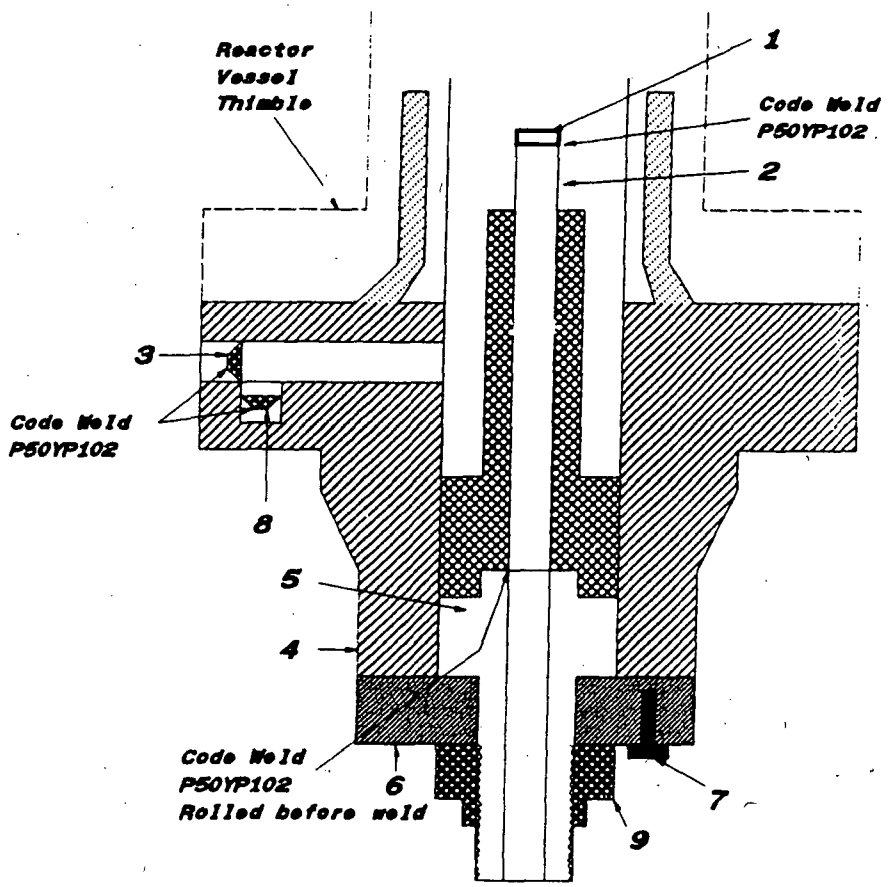

WOT No 01145341 29

ENERGY NORTHWEST
People · Vision · Solutions

FORM NIS-2 OWNER'S REPORT FOR REPAIR/REPLACEMENT ACTIVITY
As Required By The Provisions Of The ASME Code Section XI

1. Owner: Energy Northwest
Address: Columbia Generating Station, North Power Plant Loop, Richland, Washington, 99352
2. Plant: Columbia Generating Station
Address: Columbia Generating Station, North Power Plant Loop, Richland, Washington, 99352

Date: 04/03/2009
Sheet: 1 Of 1
Unit: Not Applicable

3. (a) Work Performed By: Energy Northwest/Scientech
(b) Repair/Replacement Organization P.O. No, Job No, etc.: WO No 01145341/PO No 00327297
(c) Type Code Symbol Stamp: Not Applicable
(d) Certificate Of Authorization No.: Not Applicable
(e) Expiration Date: Not Applicable
4. Identification Of System: Control Rod Drive (CRD)
5. (a) Applicable Construction Code: ASME Section III, Code Class 1 - See Notes For Code Edition, Addenda And Code Cases
(b) Applicable Edition Of ASME Section XI Used For Repair/Replacement Activity: 2001 Edition with 2003 Addenda
(c) Applicable ASME Section XI Case(s): None
6. Identification Of Components

Name Of Component	Name Of Manufacturer	Manufacturer's Serial No	National Board No	Other I.D.	Year Built	Corrected, Removed Or Installed	ASME Code Stamped (Yes Or No) Code Class
CRD	General Electric	6309	N/A	N/A	1975	See Item 7 Below	Yes, Code Class 1
Piston Tube	General Electric	5286	N/A	N/A	1975	Removed	Yes, Code Class 1
Piston Tube	General Electric	0854	N/A	N/A	1996	Installed	Yes, Code Class 1

7. Description Of Work Performed: Overhauled Control Rod Drive (CRD) assembly Serial No 6309. The overhaul work was performed in accordance with plant procedure PPM No 10.5.4 "Control Rod Drive Overhaul" as follows:

1) Disassembled Control Rod Drive (CRD) assembly for overhaul.
2) Removed existing Piston Tube (PT) assembly Serial No 5286.
3) Installed replacement Piston Tube assembly Serial No 0854.
4) Reinstalled existing Cylinder Tube And Flange (CT&F) assembly Serial No 6309.
5) Reinstalled existing ring flange Serial No 1850.
6) Reinstalled existing piston tube nut Serial No 2474.
7) Reinstalled existing ring flange cap screws.

NOTES -

1) The applicable ASME Code Cases, if any are listed on the ASME Code Data Reports.
2) The existing Piston Tube assembly Serial No 5286 is certified to comply with ASME Section III, Code Class 1, 1971 Edition with no Addenda.
3) The replacement Piston Tube assembly Serial No 0854 is certified to comply with ASME Section III, Code Class 1, 1974 Edition with Winter 1975 Addenda.
4) ASME pressure boundary (retaining) parts and materials such as Cylinder Tube And Flange (CT&F), ring flange, ring flange cap screws and piston tube nut were reinstalled (reused) during CRD overhaul activities with the exception of Piston Tube assembly which was replaced.
5) The entire Control Rod Drive (CRD) assembly is identified by the Cylinder Tube And Flange (CT&F) Serial No 6309.

WOT No 01145341 29

ENERGY NORTHWEST
People · Vision · Solutions

FORM NIS-2 OWNER'S REPORT FOR REPAIR/REPLACEMENT ACTIVITY (Back)

8 Tests Conducted: Hydrostatic [ ] **Pneumatic** [ ] **Nominal Operating Pressure** [ ] **Other** [ ]
Exempt [X] **Test Pressure:** Psig **Test Temperature:** °F

9. Remarks (Applicable Manufacturer's Data Reports to be attached): See attached N-2 Code Data Report for the following CRD part:

1) Replacement Piston Tube assembly Serial No 0854.

CERTIFICATE OF COMPLIANCE

I certify that the statements made in this Owner's Report are correct and that this conforms to the requirements of the ASME Code, Section XI.
Type Code Symbol Stamp: Not Applicable
Certificate Of Authorization No.: Not Applicable
Expiration Date: Not Applicable

Prepared By Kuldip Singh - Program Lead Engineer (PLE) ***Signed By*** Kuldip Singh - Program Lead Engineer (PLE)

Date 4/7/09 ***Date*** 4/7/09

CERTIFICATE OF INSERVICE INSPECTION

I, the undersigned, holding a valid commission issued by the National Board of Boiler and Pressure Vessel Inspectors and the State of Washington ***and employed by*** Hartford Steam Boiler Of Connecticut of Hartford, Connecticut ***have inspected the components described in this Owner's Report during the period*** 10/29/2008 ***to*** 4/7/2009 ***and state to the best of my knowledge and belief, the Owner has performed examinations and taken corrective measures described in this Owner's Report in accordance with the requirements of the ASME Code, Section XI.***
By signing this certificate neither the Inspector nor his employer makes any warranty, expressed or implied, concerning the examinations and corrective measures described in this Owner's Report. Furthermore, neither the Inspector nor his employer shall be liable in any manner for any personal injury or property damage or a loss of any kind arising from or connected with this inspection.

Inspector's Signature ***Commissions*** 13172 WANI
National Board, State, and Endorsements

Date 4/7/2009

WOT No. 01145341 29

FORM N-2 NPT CERTIFICATE HOLDERS' DATA REPORT FOR NUCLEAR PART AND APPURTENANCES*

As required by the Provision of the ASME Code Rules, Section III, Div. I

1. Manufactured & Certified by : General Electric Company Nuclear Energy (GE-NE) Philip Sups 4/6/09.

   3901 Castle Hayne Road, Wilmington, North Carolina 28401
   (Name and Address of NPT Certificate Holder)

   (b) Manufactured for : WNP 2 Richland, Washington 99352
   (Name and Address of N Certificate Holder for completed nuclear component)

2. Identification - Certificate Holder's S/N of Part : 0854 Nat'l Bd. No. N/A

   (a) Constructed According to Drawing No: 798D228G012 Rev 36 Dwg. Prepared by D. L. Peterson

   (b) Description of Part Inspected: Piston Tube Assembly

   (c) Applicable ASME Code: Section III , Edition 1974 , Addenda Date W'75 , Case No. 1361-2 Class 1

3. REMARKS: Standard part for use with Reactor. Hydrostatically tested at 1825 psi. min.
   (Brief description of service for which component was designed)

Sheet 1 of 2

We certify that the statements in this report are correct and this vessel part or appurtenance as defined in the code conforms to the rules of construction of the ASME Code Section III. (The applicable Designed Specification and Stress Report are not the responsibility of the NPT Certificate Holder for parts. An NPT Certification Holder for appurtenances is responsible for furnishing a separate Design Specification and Stress Report if the appurtenance is not included in the component Design Specification and Stress Report).

Date: 03/22/96 Signed GE-NE By
(NPT Certificate Holder) (SC QA Representive)

Certificate of Authorization Expires: 6/16/96 Certification of Authorization No. : NPT N - 1151

Certification of Design for Appurtenance

Design information on file at GE Company, San Jose, California

Stress analysis report on file at GE Company, San Jose, California

DC22A6253 Rev. 2
Design specification certified by B.N. Sridhar Prof. Eng. State Calif. Reg. No. 18345

DC22A6254 Rev 1
Stress analysis report certified by Edward Yoshio Prof. Eng. State Calif. Reg. No. M018646

Certification of Shop Inspection

I, the undersigned, holding a valid commission by the National Board of Boiler and Pressure Inspectors and/or the State or Province of North Carolina and employed by Department of Labor of State of North Carolina have inspected the part of a pressure vessel described in this Partial Data Report on 3/15, 1996, and state that to the best of my knowledge and belief, the NPT Certificate Holder has constructed this part in accordance with the ASME Code Section III.

By signing this certificate, neither the Inspector nor his employer makes any warranty, expressed or implied, concerning the part described in the Partial Data Report. Furthermore, neither the Inspector nor his employer shall be liable in any manner for any personal injury or property damages or a loss of any kind arising from or connected with this inspection.

3/22, 1996 Jerome P Ewert NC 1231, Ohio, WC 3686 PA
Date Inspector's Signature National Board, State, Province And No.

*Supplemental sheets in form of lists, sketches or drawing may be used provided (1) size is 8-1/2" x 11", (2) information in 1-2 on this Data Report is included on each sheet, and (3) each sheet is numbered and number of sheets is recorded in Item 3. "REMARKS".

FORM N-2 (back)

Items 4-8 Incl. to be completed for single wall vessels, jackets vessels, or shells of heat exchangers.

4. Shell: Material _____ T.S. _____ Nominal Thickness ___ in. Corrosion Allowance ___ in. Dia. ___ ft. ___ in. Length ___ ft. ___ in
(Kind & Spec. No.) (Min. of Range Specified)

5. Seams: Long _____ H.T.[1] _____ R.T. _____ Efficiency _____ %
Girth _____ H.T.[1] _____ R.T. _____ No. of Courses _____

6. Heads: (a) Material _____ T.S. _____ (b) Material _____ T.S. _____

	Location (Top Bottom, Ends)	Thickness	Crown Radius	Knuckle Radius	Elliptical Ratio	Concial Apex Angle	Hemispherical Radius	Flat Diameter	Side to Press. (conv. or conc.)
(a)									
(b)									

If removable, bolts used _____ (Material, Spec. No., T.S. Size Number) Other fastening _____ (Describe or attach sketch)

7. Jacket Closure: _____
(Describe as ogee and weld, bar, etc. If bar give dimensions, if bolts, describe or sketch)

Drop Weight _____
Charpy Impact _____ ft-lb

8. Design pressure[2] 1250 psi at 575 °F at temp of _____ °F

Items 9 and 10 to be completed for tube sections

9. Tube Sheets: Stationary. Material _____ (Kind & Spec. No.) Dia. _____ (Subject to pressure) Thickness ___ in. Attachment _____ (Welded, Bolted)
Floating. Material _____ Dia. _____ Thickness ___ in. Attachment _____

10. Tubes: Material _____ O.D. _____ in. Thickness _____ inches or gage. Number _____ Type _____ (Str. or U)

Items 11 - 14 incl. to be completed for inner chambers of jacketed vessels, or channels of heat exchangers.

11. Shell: Material _____ T.S. _____ Nominal Thickness ___ in. Corrosion Allowance ___ in. Dia. ___ ft. ___ in. Length ___ ft. ___ in
(Kind & Spec. No.) (Min. of Range Specified)

12. Seams: Long _____ H.T.[1] _____ R.T. _____ Efficiency _____ %
Girth _____ H.T.[1] _____ R.T. _____ No. of Courses _____

13. Heads: (a) Material _____ T.S. _____ (b) Material _____ T.S. _____

	Location	Thickness	Crown Radius	Knuckle Radius	Elliptical Ratio	Concial Apex Angle	Hemispherical Radius	Flat Diameter	Side to Press. (conv. or conc.)
(a)	Top, bottom, ends								
(b)	Channel								

If removable, bolts used (a)_____ (b)_____ (c)_____ Other fastening _____ (Describe or attach sketch)

Drop Weight _____
Charpy Impact _____ ft-lb

14. Design pressure[2] _____ psi at _____ °F at temp of _____ °F

Items below to be completed for all vessels where applicable.

15. Safety Valve Outlets: Number _____ Size _____ Location _____

16. Nozzles:

Purpose (Inlet, Outlet, Drain)	Number	Dia. or Size	Type	Material	Thickness	Reinforcement Material	How Attached

17. Inspection Openings: Manholes, No. _____ Size _____ Location _____
Handholes, No. _____ Size _____ Location _____
Threaded, No. _____ Size _____ Location _____

18. Supports: Skirt _____ (Yes or No) Lugs _____ (Number) Legs _____ (Number) Other _____ (Describe) Attached _____ (Where & How)

1 - If Postweld Heat-Treated.

2 - Other internal or external pressure with coincident temperature when applicable

FORM N-2 NPT CERTIFICATE HOLDERS' DATA REPORT FOR NUCLEAR PART AND APPURTENANCES*

As required by the Provision of the ASME Code Rules, Section III, Div. I

WOT No. 01145341 2

1. Manufactured & Certified by : General Electric Company Nuclear Energy (GE-NE)

3901 Castle Hayne Road, Wilmington, North Carolina 28401

(Name and Address of NPT Certificate Holder)

(b) Manufactured for : WNP 2 Richland, Washington 99352

(Name and Address of N Certificate Holder for completed nuclear component)

2. Identification - Certificate Holder's S/N of Part : 0854 Nat'l Bd. No. N/A

(a) Constructed According to Drawing No: 798D228G012 Rev 36 Dwg. Prepared by D. L. Peterson

(b) Description of Part Inspected: Piston Tube Assembly

(c) Applicable ASME Code: Section III , Edition 1974 , Addenda Date W'75 , Case No. 1361-2 Class 1

3. REMARKS: Standard part for use with Reactor. Hydrostatically tested at 1825 psi. min.

(Brief description of service for which component was designed)

Sheet 2 of 2

1. Cap 166B9274P001
   SA182 - F316
   3/8" thick x 1 1/16" OD

2. Indicator Tube 167B4908P001
   SA312 - TP316
   3/4" sch 40 - seamless pipe
   0.113" wall thickness
   1.065" max. dia.

3. Plug 159A1176P001
   SA182 - F304
   1/4" thick x 0.812" OD

4. Flange 919D610P001 (719E474)
   SA182 - F304
   3.37" thick x 9 5/8" OD

5. Head 129B3539P005
   SA182 - F304
   7/8" thick x 2.875" dia.

6. Ring Flange 114B5122P002
   SA182 - F304
   1" thick x 5.0" OD x 1.75" ID

7. Cap Screw 117C4516P002
   SA193 - B6
   6 ea. 1/2" dia. on 4 1/8" bolt circle

8. Plug 175A7961P001
   SA182 - F304
   0.38" thick x 1.307" dia.

9. Nut 114B5460P001
   XM - 19 SA479
   1.30" thick x 2.62" dia.

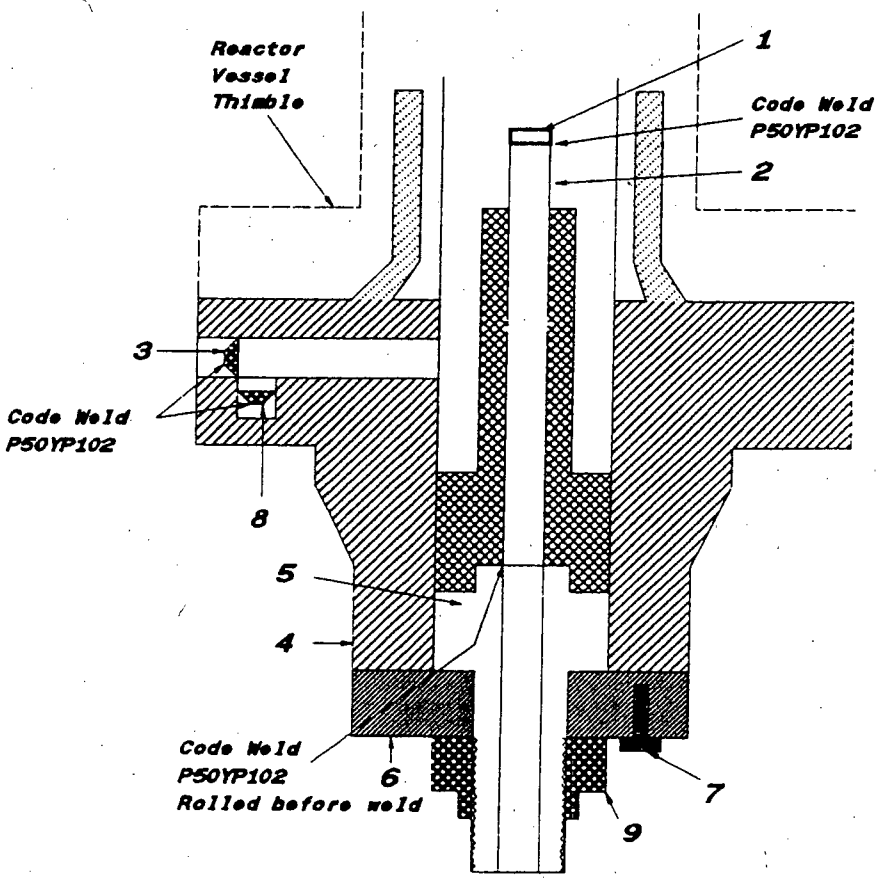

WOT No 01145341 31

ENERGY NORTHWEST
People · Vision · Solutions

FORM NIS-2 OWNER'S REPORT FOR REPAIR/REPLACEMENT ACTIVITY
As Required By The Provisions Of The ASME Code Section XI

1. Owner: Energy Northwest
Address: Columbia Generating Station, North Power Plant Loop, Richland, Washington, 99352
2. Plant: Columbia Generating Station
Address: Columbia Generating Station, North Power Plant Loop, Richland, Washington, 99352

Date: 04/03/2009
Sheet: 1 Of 1
Unit: Not Applicable

3. (a) Work Performed By: Energy Northwest/Scientech
(b) Repair/Replacement Organization P.O. No, Job No, etc.: WO No 01145341/PO No 00327297
(c) Type Code Symbol Stamp: Not Applicable
(d) Certificate Of Authorization No.: Not Applicable
(e) Expiration Date: Not Applicable
4. Identification Of System: Control Rod Drive (CRD)
5. (a) Applicable Construction Code: ASME Section III, Code Class 1 - See Notes For Code Edition, Addenda And Code Cases
(b) Applicable Edition Of ASME Section XI Used For Repair/Replacement Activity: 2001 Edition with 2003 Addenda
(c) Applicable ASME Section XI Case(s): None
6. Identification Of Components

Name Of Component	Name Of Manufacturer	Manufacturer's Serial No	National Board No	Other I.D.	Year Built	Corrected, Removed Or Installed	ASME Code Stamped (Yes Or No) Code Class
CRD	General Electric	A8652	N/A	N/A	1988	See Item 7 Below	Yes, Code Class 1
Piston Tube	General Electric	4910	N/A	N/A	1974	Removed	Yes, Code Class 1
Piston Tube	General Electric	0916	N/A	N/A	1995	Installed	Yes, Code Class 1

7. Description Of Work Performed: Overhauled Control Rod Drive (CRD) assembly Serial No A8652. The overhaul work was performed in accordance with plant procedure PPM No 10.5.4 "Control Rod Drive Overhaul" as follows:

1) Disassembled Control Rod Drive (CRD) assembly for overhaul.
2) Removed existing Piston Tube (PT) assembly Serial No 4910.
3) Installed replacement Piston Tube assembly Serial No 0916.
4) Reinstalled existing Cylinder Tube And Flange (CT&F) assembly Serial No A8652.
5) Reinstalled existing ring flange Serial No 1914.
6) Reinstalled existing piston tube nut Serial No 2482.
7) Reinstalled existing ring flange cap screws.

NOTES -

1) The applicable ASME Code Cases, if any are listed on the ASME Code Data Reports.
2) The existing Piston Tube assembly Serial No 4910 is certified to comply with ASME Section III, Code Class 1, 1971 Edition with no Addenda.
3) The replacement Piston Tube assembly Serial No 0916 is certified to comply with ASME Section III, Code Class 1, 1974 Edition with Winter 1975 Addenda.
4) ASME pressure boundary (retaining) parts and materials such as Cylinder Tube And Flange (CT&F), ring flange, ring flange cap screws and piston tube nut were reinstalled (reused) during CRD overhaul activities with the exception of Piston Tube assembly which was replaced.
5) The entire Control Rod Drive (CRD) assembly is identified by the Cylinder Tube And Flange (CT&F) Serial No A8652.

WOT No 01145341 31

ENERGY NORTHWEST
People · Vision · Solutions

FORM NIS-2 OWNER'S REPORT FOR REPAIR/REPLACEMENT ACTIVITY (Back)

8 Tests Conducted: Hydrostatic [ ] **Pneumatic** [ ] **Nominal Operating Pressure** [ ] **Other** [ ]
Exempt [X] **Test Pressure:** Psig **Test Temperature:** °F

9. Remarks (Applicable Manufacturer's Data Reports to be attached): See attached N-2 Code Data Report for the following CRD part:

1) Replacement Piston Tube assembly Serial No 0916.

CERTIFICATE OF COMPLIANCE

I certify that the statements made in this Owner's Report are correct and that this conforms to the requirements of the ASME Code, Section XI.
Type Code Symbol Stamp: Not Applicable
Certificate Of Authorization No.: Not Applicable
Expiration Date: Not Applicable

Prepared By Kuldip Singh — Kuldip Singh - Program Lead Engineer (PLE)
Date 4/7/09

Signed By Kuldip Singh — Kuldip Singh - Program Lead Engineer (PLE)
Date 4/7/09.

CERTIFICATE OF INSERVICE INSPECTION

I, the undersigned, holding a valid commission issued by the National Board of Boiler and Pressure Vessel Inspectors and the State of Washington ***and employed by*** Hartford Steam Boiler Of Connecticut of Hartford, Connecticut ***have inspected the components described in this Owner's Report during the period*** 10/29/2008 ***to*** 4/8/2009 ***and state to the best of my knowledge and belief, the Owner has performed examinations and taken corrective measures described in this Owner's Report in accordance with the requirements of the ASME Code, Section XI.***
By signing this certificate neither the Inspector nor his employer makes any warranty, expressed or implied, concerning the examinations and corrective measures described in this Owner's Report. Furthermore, neither the Inspector nor his employer shall be liable in any manner for any personal injury or property damage or a loss of any kind arising from or connected with this inspection.

Inspector's Signature

Commissions WANI 13172
National Board, State, and Endorsements

Date 4/8/2009

WOT No. 01145341 31

FORM N-2 NPT CERTIFICATE HOLDERS' DATA REPORT FOR NUCLEAR PART AND APPURTENANCES*

As required by the Provision of the ASME Code Rules, Section III, Div. I

Manufactured & Certified by : General Electric Company Nuclear Fuel & Components Manufacturing (GE NF & CM)

2117 Castle Hayne Road, Wilmington, North Carolina 28401 4/6/09.

(Name and Address of NPT Certificate Holder)

(b) Manufactured for : WNP 2 Richland, Washington 99352

(Name and Address of N Certificate Holder for completed nuclear component)

2. Identification - Certificate Holder's S/N of Part : 0916 Nat'l Bd. No. N/A

(a) Constructed According to Drawing No: 798D228G012 Rev 36 Dwg. Prepared by D. L. Peterson

(b) Description of Part Inspected: Piston Tube Assembly

(c) Applicable ASME Code: Section III , Edition 1974 , Addenda Date W'75 , Case No. 1361-2 Class 1

3. REMARKS: Standard part for use with Reactor. Hydrostatically tested at 1825 psi. min.

(Brief description of service for which component was designed)

Sheet 1 of 2

We certify that the statements in this report are correct and this vessel part or appurtenance as defined in the code conforms to the rules of construction of the ASME Code Section III. (The applicable Designed Specification and Stress Report are not the responsibility of the NPT Certificate Holder for parts. An NPT Certification Holder for appurtenances is responsible for furnishing a separate Design Specification and Stress Report if the appurtenance is not included in the component Design Specification and Stress Report).

Date: 06/27/95 Signed GE - NEBG - NF & CM - QA By

(NPT Certificate Holder). (GE QA Representive)

Certificate of Authorization Expires: 6/16/96 Certification of Authorization No. : NPT N - 1151

Certification of Design for Appurtenance

Design information on file at GE Company, San Jose, California

Stress analysis report on file at GE Company, San Jose, California

DC22A6253 Rev. 1
Design specification certified by Bjorn Haaberg Prof. Eng. State Calif. Reg. No. 15570

DC22A6254 Rev 1
Stress analysis report certified by Edward Yoshio Prof. Eng. State Calif. Reg. No. M018646

Certification of Shop Inspection

I, the undersigned, holding a valid commission by the National Board of Boiler and Pressure Inspectors and/or the State or Province of North Carolina and employed by Department of Labor of State of North Carolina have inspected the part of a pressure vessel described in this Partial Data Report on 7/13, 1994, and state that to the best of my knowledge and belief, the NPT Certificate Holder has constructed this part in accordance with the ASME Code Section III.

By signing this certificate, neither the Inspector nor his employer makes any warranty, expressed or implied, concerning the part described in the Partial Data Report. Furthermore, neither the Inspector nor his employer shall be liable in any manner for any personal injury or property damages or a loss of any kind arising from or connected with this inspection.

6/27, 1995 Jerome P Ewen NC 1231, Ohio, WC 3686 PA

Date Inspector's Signature National Board, State, Province And No.

*Supplemental sheets in form of lists, sketches or drawing may be used provided (1) size is 8-1/2" x 11", (2) information in 1-2 on this Data Report is included on each sheet, and (3) each sheet is numbered and number of sheets is recorded in Item 3. "REMARKS".

(07/96)

FORM N-2 (back)

Items 4-8 Incl. to be completed for single wall vessels, jackets vessels, or shells of heat exchangers.

4. Shell: Material _____ T.S. _____ Nominal Thickness ___ in. Corrosion Allowance ___ in. Dia. ___ ft. ___ in. Length ___ ft. ___ in.
(Kind & Spec. No.) (Min. of Range Specified)

5. Seams: Long _____ H.T.[1] _____ R.T. _____ Efficiency _____%
Girth _____ H.T.[1] _____ R.T. _____ No. of Courses _____

6. Heads: (a) Material _____ T.S. _____ (b) Material _____ T.S. _____

	Location (Top Bottom, Ends)	Thickness	Crown Radius	Knuckle Radius	Elliptical Ratio	Concial Apex Angle	Hemispherical Radius	Flat Diameter	Side to Press. (conv. or conc.)
(a)									
(b)									

If removable, bolts used _____ (Material, Spec. No., T.S. Size Number) Other fastening _____ (Describe or attach sketch)

7. Jacket Closure: _____
(Describe as ogee and weld, bar, etc. If bar give dimensions, if bolts, describe or sketch)

Drop Weight _____
Charpy Impact _____ ft-lb

8. Design pressure[2] 1250 psi at 575 °F at temp of _____ °F

Items 9 and 10 to be completed for tube sections

9. Tube Sheets: Stationary. Material _____ (Kind & Spec. No.) Dia. _____ (Subject to pressure) Thickness ___ in. Attachment _____ (Welded, Bolted)
Floating. Material _____ Dia. _____ Thickness ___ in. Attachment _____

10. Tubes: Material _____ O.D. _____ in. Thickness _____ inches or gage. Number _____ Type _____ (Str. or U)

Items 11 - 14 incl. to be completed for inner chambers of jacketed vessels, or channels of heat exchangers.

11. Shell: Material _____ T.S. _____ Nominal Thickness ___ in. Corrosion Allowance ___ in. Dia. ___ ft. ___ in. Length ___ ft. ___ in.
(Kind & Spec. No.) (Min. of Range Specified)

12. Seams: Long _____ H.T.[1] _____ R.T. _____ Efficiency _____%
Girth _____ H.T.[1] _____ R.T. _____ No. of Courses _____

13. Heads: (a) Material _____ T.S. _____ (b) Material _____ T.S. _____

	Location	Thickness	Crown Radius	Knuckle Radius	Elliptical Ratio	Concial Apex Angle	Hemispherical Radius	Flat Diameter	Side to Press. (conv. or conc.)
(a)	Top, bottom, ends								
(b)	Channel								

If removable, bolts used (a)_____ (b)_____ (c)_____ Other fastening _____ (Describe or attach sketch)

Drop Weight _____
Charpy Impact _____ ft-lb

14. Design pressure[2] _____ psi at _____ °F at temp of _____ °F

Items below to be completed for all vessels where applicable.

15. Safety Valve Outlets: Number _____ Size _____ Location _____

16. Nozzles:

Purpose (Inlet, Outlet, Drain)	Number	Dia. or Size	Type	Material	Thickness	Reinforcement Material	How Attached

17. Inspection Openings: Manholes, No. _____ Size _____ Location _____
Handholes, No. _____ Size _____ Location _____
Threaded, No. _____ Size _____ Location _____

18. Supports: Skirt _____ (Yes or No) Lugs _____ (Number) Legs _____ (Number) Other _____ (Describe) Attached _____ (Where & How)

[1] Postweld Heat-Treated.
[2] List other internal or external pressure with coincident temperature when applicable

WOT No. 0114534/31

FORM N-2 NPT CERTIFICATE HOLDERS' DATA REPORT FOR NUCLEAR . .RT AND APPURTENANCES*

As required by the Provision of the ASME Code Rules, Section III, Div. I

1. Manufactured & Certified by : General Electric Company Nuclear Fuel & Components Manufacturing (GE NF & CM)
   2117 Castle Hayne Road, Wilmington, North Carolina 28401 4/6/09.
   (Name and Address of NPT Certificate Holder)

   (b) Manufactured for : WNP 2 Richland, Washington 99352
   (Name and Address of N Certificate Holder for completed nuclear component)

2. Identification - Certificate Holder's S/N of Part : 0916 Nat'l Bd. No. N/A

   (a) Constructed According to Drawing No: 798D228G012 Rev 36 Dwg. Prepared by D. L. Peterson

   (b) Description of Part Inspected: Piston Tube Assembly

   (c) Applicable ASME Code: Section III , Edition 1974 , Addenda Date W'75 , Case No. 1361-2 Class 1

3. REMARKS: Standard part for use with Reactor. Hydrostatically tested at 1825 psi. min.
   (Brief description of service for which component was designed)

1. Cap 166B9274P001
   SA182 - F316
   3/8" thick x 1 1/16" OD

2. Indicator Tube 167B4908P001
   SA312 - TP316
   3/4" sch 40 - seamless pipe
   0.113" wall thickness
   1.065" max. dia.

3. Plug 159A1176P001
   SA182 - F304
   1/4" thick x 0.812" OD

4. Flange 919D610P001 (719E474)
   SA182 - F304
   3.37" thick x 9 5/8" OD

5. Head 129B3539P005
   SA182 - F304
   7/8" thick x 2.875" dia.

6. Ring Flange 114B5122P002
   SA182 - F304
   1" thick x 5.0" OD x 1.75" ID

7. Cap Screw 117C4516P002
   SA193 - B6
   6 ea. 1/2" dia. on 4 1/8" bolt circle

8. Plug 175A7961P001
   SA182 - F304
   0.38" thick x 1.307" dia.

9. Nut 114B5460P001
   XM - 19 SA479
   1.30" thick x 2.62" dia.

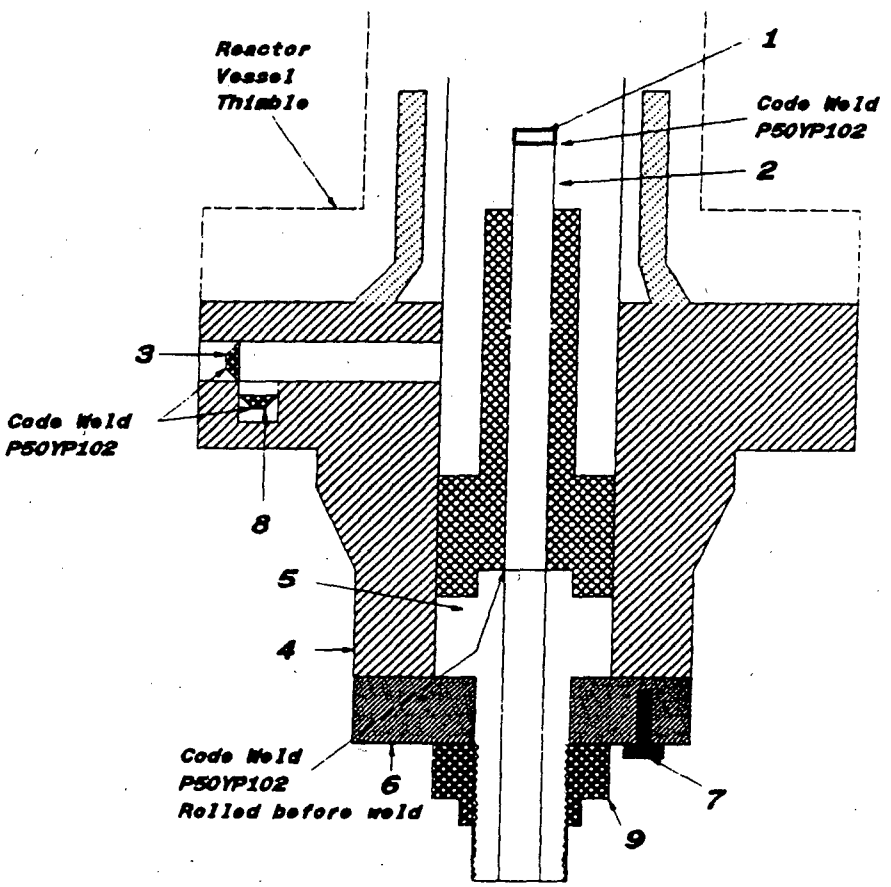

WOT No 01145341 32

ENERGY NORTHWEST
People · Vision · Solutions

FORM NIS-2 OWNER'S REPORT FOR REPAIR/REPLACEMENT ACTIVITY
As Required By The Provisions Of The ASME Code Section XI

1. Owner: Energy Northwest
Address: Columbia Generating Station, North Power Plant Loop, Richland, Washington, 99352
2. Plant: Columbia Generating Station
Address: Columbia Generating Station, North Power Plant Loop, Richland, Washington, 99352

Date: 04/03/2009
Sheet: 1 Of 1
Unit: Not Applicable

3. (a) Work Performed By: Energy Northwest/Scientech
(b) Repair/Replacement Organization P.O. No, Job No, etc.: WO No 01145341/PO No 00327297
(c) Type Code Symbol Stamp: Not Applicable
(d) Certificate Of Authorization No.: Not Applicable
(e) Expiration Date: Not Applicable
4. Identification Of System: Control Rod Drive (CRD)
5. (a) Applicable Construction Code: ASME Section III, Code Class 1 - See Notes For Code Edition, Addenda And Code Cases
(b) Applicable Edition Of ASME Section XI Used For Repair/Replacement Activity: 2001 Edition with 2003 Addenda
(c) Applicable ASME Section XI Case(s): None
6. Identification Of Components

Name Of Component	Name Of Manufacturer	Manufacturer's Serial No	National Board No	Other I.D.	Year Built	Corrected, Removed Or Installed	ASME Code Stamped (Yes Or No) Code Class
CRD	General Electric	5485	N/A	N/A	1974	See Item 7 Below	Yes, Code Class 1
Piston Tube	General Electric	5313	N/A	N/A	1974	Removed	Yes, Code Class 1
Piston Tube	General Electric	0926	N/A	N/A	1995	Installed	Yes, Code Class 1

7. Description Of Work Performed: Overhauled Control Rod Drive (CRD) assembly Serial No 5485. The overhaul work was performed in accordance with plant procedure PPM No 10.5.4 "Control Rod Drive Overhaul" as follows:

1) Disassembled Control Rod Drive (CRD) assembly for overhaul.
2) Removed existing Piston Tube (PT) assembly Serial No 5313.
3) Installed replacement Piston Tube assembly Serial No 0926.
4) Reinstalled existing Cylinder Tube And Flange (CT&F) assembly Serial No 5485.
5) Reinstalled existing ring flange Serial No 1887.
6) Reinstalled existing piston tube nut Serial No 2140.
7) Reinstalled existing ring flange cap screws.

NOTES

1) The applicable ASME Code Cases, if any are listed on the ASME Code Data Reports.
2) The existing Piston Tube assembly Serial No 5313 is certified to comply with ASME Section III, Code Class 1, 1971 Edition with no Addenda.
3) The replacement Piston Tube assembly Serial No 0926 is certified to comply with ASME Section III, Code Class 1, 1974 Edition with Winter 1975 Addenda.
4) ASME pressure boundary (retaining) parts and materials such as Cylinder Tube And Flange (CT&F), ring flange, ring flange cap screws and piston tube nut were reinstalled (reused) during CRD overhaul activities with the exception of Piston Tube assembly which was replaced.
5) The entire Control Rod Drive (CRD) assembly is identified by the Cylinder Tube And Flange (CT&F) Serial No 5485.

WOT No 01145341 32

ENERGY NORTHWEST
People · Vision · Solutions

FORM NIS-2 OWNER'S REPORT FOR REPAIR/REPLACEMENT ACTIVITY (Back)

8 Tests Conducted: Hydrostatic [ ] **Pneumatic** [ ] **Nominal Operating Pressure** [ ] **Other** [ ]
Exempt [X] **Test Pressure:** Psig **Test Temperature:** °F

9. Remarks (Applicable Manufacturer's Data Reports to be attached): See attached N-2 Code Data Report for the following CRD part:

1) Replacement Piston Tube assembly Serial No 0926.

CERTIFICATE OF COMPLIANCE

I certify that the statements made in this Owner's Report are correct and that this conforms to the requirements of the ASME Code, Section XI.
Type Code Symbol Stamp: Not Applicable
Certificate Of Authorization No.: Not Applicable
Expiration Date: Not Applicable

Prepared By Kuldip Singh - Program Lead Engineer (PLE) **Signed By** Kuldip Singh - Program Lead Engineer (PLE)

Date 4/8/09 **Date** 4/8/09

CERTIFICATE OF INSERVICE INSPECTION

I, the undersigned, holding a valid commission issued by the National Board of Boiler and Pressure Vessel Inspectors and the State of Washington ***and employed by*** Hartford Steam Boiler Of Connecticut of Hartford, Connecticut ***have inspected the components described in this Owner's Report during the period*** 10/29/2008 ***to*** 4/13/2009 ***and state to the best of my knowledge and belief, the Owner has performed examinations and taken corrective measures described in this Owner's Report in accordance with the requirements of the ASME Code, Section XI.***
By signing this certificate neither the Inspector nor his employer makes any warranty, expressed or implied, concerning the examinations and corrective measures described in this Owner's Report. Furthermore, neither the Inspector nor his employer shall be liable in any manner for any personal injury or property damage or a loss of any kind arising from or connected with this inspection.

Inspector's Signature **Commissions** 13172 WANI
National Board, State, and Endorsements

Date 4/13/2009

WO7 No. 01145341 32

FORM N-2 NPT CERTIFICATE HOLDERS' DATA REPORT FOR NUCLEAR PART AND APPURTENANCES*

As required by the Provision of the ASME Code Rules, Section III, Div. I

1. Manufactured & Certified by : General Electric Company Nuclear Energy (GE-NE) Dilip Sujb 4/6/09.
   3901 Castle Hayne Road, Wilmington, North Carolina 28401
   (Name and Address of NPT Certificate Holder)

   (b) Manufactured for : WNP 2 Richland, Washington 99352
   (Name and Address of N Certificate Holder for completed nuclear component)

2. Identification - Certificate Holder's S/N of Part : 0926 Nat'l Bd. No. N/A

   (a) Constructed According to Drawing No: 798D228G012 Rev 36 Dwg. Prepared by D. L. Peterson

   (b) Description of Part Inspected: Piston Tube Assembly

   (c) Applicable ASME Code: Section III , Edition 1974 , Addenda Date W'75 , Case No. 1361-2 Class 1

3. REMARKS: Standard part for use with Reactor. Hydrostatically tested at 1825 psi. min.
   (Brief description of service for which component was designed)

Sheet 1 of 2

We certify that the statements in this report are correct and this vessel part or appurtenance as defined in the code conforms to the rules of construction of the ASME Code Section III. (The applicable Designed Specification and Stress Report are not the responsibility of the NPT Certificate Holder for parts. An NPT Certification Holder for appurtenances is responsible for furnishing a separate Design Specification and Stress Report if the appurtenance is not included in the component Design Specification and Stress Report).

Date: 03/22/96 Signed GE-NE By
(NPT Certificate Holder) (SC QA Representive)

Certificate of Authorization Expires: 6/16/96 Certification of Authorization No. : NPT N - 1151

Certification of Design for Appurtenance

Design information on file at GE Company, San Jose, California

Stress analysis report on file at GE Company, San Jose, California

DC22A6253 Rev. 2
Design specification certified by B.N. Sridhar Prof. Eng. State Calif. Reg. No. 18345

DC22A6254 Rev 1
Stress analysis report certified by Edward Yoshio Prof. Eng. State Calif. Reg. No. M018646

Certification of Shop Inspection

I, the undersigned, holding a valid commission by the National Board of Boiler and Pressure Inspectors and/or the State or Province of North Carolina and employed by Department of Labor of State of North Carolina have inspected the part of a pressure vessel described in this Partial Data Report on 3/15, 1996, and state that to the best of my knowledge and belief, the NPT Certificate Holder has constructed this part in accordance with the ASME Code Section III.
By signing this certificate, neither the Inspector nor his employer makes any warranty, expressed or implied, concerning the part described in the Partial Data Report. Furthermore, neither the Inspector nor his employer shall be liable in any manner for any personal injury or property damages or a loss of any kind arising from or connected with this inspection.

7/22, 1996	Jerome P Ewer	NC 1231, Ohio, WC 3686 PA
Date	Inspector's Signature	National Board, State, Province And No.

Supplemental sheets in form of lists, sketches or drawing may be used provided (1) size is 8-1/2" x 11", (2) information in 1-2 on this Data Report is included on each sheet, and (3) each sheet is numbered and number of sheets is recorded in Item 3. "REMARKS".

FORM N-2 (back)

Items 4-8 Incl. to be completed for single wall vessels, jackets vessels, or shells of heat exchangers.

4. Shell: Material _____ T.S. _____ Nominal Thickness ____ in. Corrosion Allowance ____ in. Dia. ____ ft. ____ in. Length ____ ft. ____
(Kind & Spec. No.) (Min. of Range Specified)

5. Seams: Long _____ H.T.[1] _____ R.T. _____ Efficiency _____%
Girth _____ H.T.[1] _____ R.T. _____ No. of Courses _____

6. Heads: (a) Material _____ T.S. _____ (b) Material _____ T.S. _____

	Location (Top Bottom, Ends)	Thickness	Crown Radius	Knuckle Radius	Elliptical Ratio	Concial Apex Angle	Hemispherical Radius	Flat Diameter	Side to Press. (conv. or conc.)
(a)									
(b)									

If removable, bolts used _____ Other fastening _____
(Material, Spec. No., T.S. Size Number) (Describe or attach sketch)

7. Jacket Closure: _____
(Describe as ogee and weld, bar, etc. If bar give dimensions, if bolts, describe or sketch)

Drop Weight _____
Charpy Impact _____ ft-lb

8. Design pressure[2] 1250 psi at 575 °F at temp of _____ °F

Items 9 and 10 to be completed for tube sections

9. Tube Sheets: Stationary. Material _____ (Kind & Spec. No.) Dia. _____ (Subject to pressure) Thickness ____ in. Attachment _____ (Welded, Bolted)
Floating. Material _____ Dia. _____ Thickness ____ in. Attachment _____

10. Tubes: Material _____ O.D. _____ in. Thickness _____ inches or gage. Number _____ Type _____ (Str. or U)

Items 11 - 14 incl. to be completed for inner chambers of jacketed vessels, or channels of heat exchangers.

11. Shell: Material _____ T.S. _____ Nominal Thickness ____ in. Corrosion Allowance ____ in. Dia. ____ ft. ____ in. Length ____ ft. ____
(Kind & Spec. No.) (Min. of Range Specified)

12. Seams: Long _____ H.T.[1] _____ R.T. _____ Efficiency _____%
Girth _____ H.T.[1] _____ R.T. _____ No. of Courses _____

13. Heads: (a) Material _____ T.S. _____ (b) Material _____ T.S. _____

	Location	Thickness	Crown Radius	Knuckle Radius	Elliptical Ratio	Concial Apex Angle	Hemispherical Radius	Flat Diameter	Side to Press. (conv. or conc.)
(a)	Top, bottom, ends								
(b)	Channel								

If removable, bolts used (a)_____ (b)_____ (c)_____ Other fastening _____
(Describe or attach sketch)

Drop Weight _____
Charpy Impact _____ ft-lb

14. Design pressure[2] _____ psi at _____ °F at temp of _____ °F

Items below to be completed for all vessels where applicable.

15. Safety Valve Outlets: Number _____ Size _____ Location _____

16. Nozzles:

Purpose (Inlet, Outlet, Drain)	Number	Dia. or Size	Type	Material	Thickness	Reinforcement Material	How Attached

17. Inspection Openings: Manholes, No. _____ Size _____ Location _____
Handholes, No. _____ Size _____ Location _____
Threaded, No. _____ Size _____ Location _____

18. Supports: Skirt _____ (Yes or No) Lugs _____ (Number) Legs _____ (Number) Other _____ (Describe) Attached _____ (Where & How)

[1] If Postweld Heat-Treated.

[2] If other than external pressure with corresponding temperature when applicable.

WOT No. 0114534132

FORM N-2 NPT CERTIFICATE HOLDERS' DATA REPORT FOR NUCLEAR PART AND APPURTENANCES*

As required by the Provision of the ASME Code Rules, Section III, Div. I

Philip Sims 4/6/09.

1. Manufactured & Certified by : General Electric Company Nuclear Energy (GE-NE)
   3901 Castle Hayne Road, Wilmington, North Carolina 28401
   (Name and Address of NPT Certificate Holder)

   (b) Manufactured for : WNP 2 Richland, Washington 99352
   (Name and Address of N Certificate Holder for completed nuclear component)

2. Identification - Certificate Holder's S/N of Part : 0926 Nat'l Bd. No. N/A

   (a) Constructed According to Drawing No: 798D228G012 Rev 36 Dwg. Prepared by D. L. Peterson

   (b) Description of Part Inspected: Piston Tube Assembly

   (c) Applicable ASME Code: Section III , Edition 1974 , Addenda Date W'75 , Case No. 1361-2 Class 1

3. REMARKS: Standard part for use with Reactor. Hydrostatically tested at 1825 psi. min.
   (Brief description of service for which component was designed)

1. Cap 166B9274P001
   SA182 - F316
   3/8" thick x 1 1/16" OD

2. Indicator Tube 167B4908P001
   SA312 - TP316
   3/4" sch 40 - seamless pipe
   0.113" wall thickness
   1.065" max. dia.

3. Plug 159A1176P001
   SA182 - F304
   1/4" thick x 0.812" OD

4. Flange 919D610P001 (719E474)
   SA182 - F304
   3.37" thick x 9 5/8" OD

5. Head 129B3539P005
   SA182 - F304
   7/8" thick x 2.875" dia.

6. Ring Flange 114B5122P002
   SA182 - F304
   1" thick x 5.0" OD x 1.75" ID

7. Cap Screw 117C4516P002
   SA193 - B6
   6 ea. 1/2" dia. on 4 1/8" bolt circle

8. Plug 175A7961P001
   SA182 - F304
   0.38" thick x 1.307" dia.

9. Nut 114B5460P001
   XM - 19 SA479
   1.30" thick x 2.62" dia.

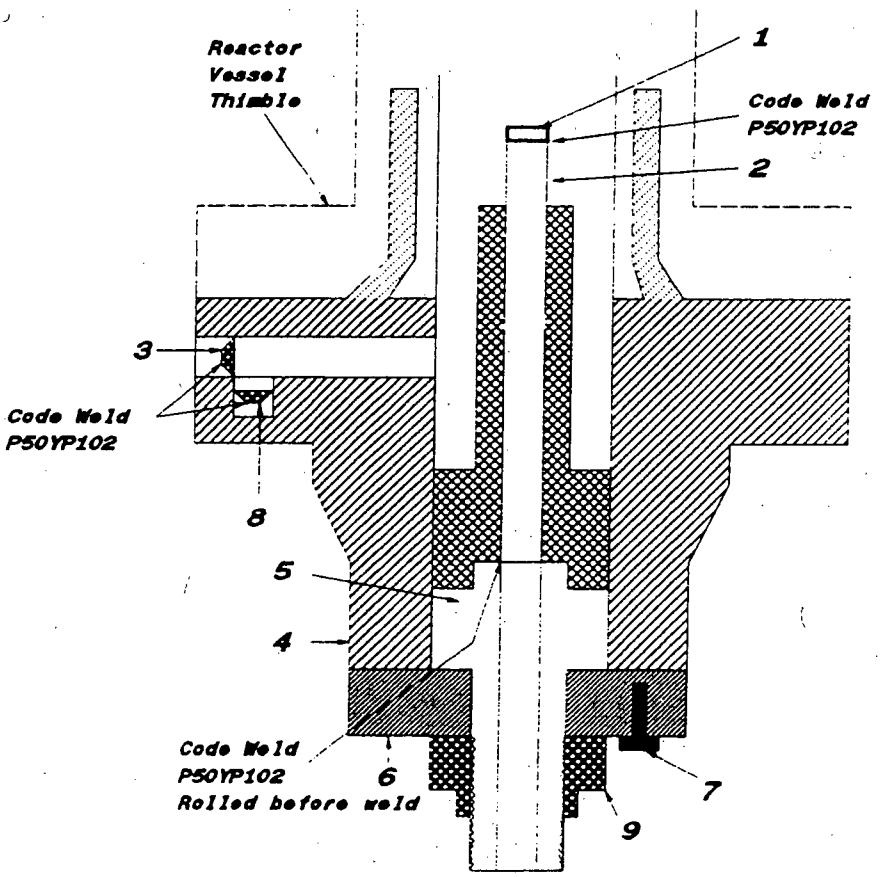

WOT No 01145341 33

ENERGY NORTHWEST
People · Vision · Solutions

FORM NIS-2 OWNER'S REPORT FOR REPAIR/REPLACEMENT ACTIVITY
As Required By The Provisions Of The ASME Code Section XI

1. Owner: Energy Northwest
Address: Columbia Generating Station, North Power Plant Loop, Richland, Washington, 99352
2. Plant: Columbia Generating Station
Address: Columbia Generating Station, North Power Plant Loop, Richland, Washington, 99352

Date: 04/06/2009
Sheet: 1 Of 1
Unit: Not Applicable

3. (a) Work Performed By: Energy Northwest/Scientech
(b) Repair/Replacement Organization P.O. No, Job No, etc.: WO No 01145341/PO No 00327297
(c) Type Code Symbol Stamp: Not Applicable
(d) Certificate Of Authorization No.: Not Applicable
(e) Expiration Date: Not Applicable
4. Identification Of System: Control Rod Drive (CRD)
5. (a) Applicable Construction Code: ASME Section III, Code Class 1 - See Notes For Code Edition, Addenda And Code Cases
(b) Applicable Edition Of ASME Section XI Used For Repair/Replacement Activity: 2001 Edition with 2003 Addenda
(c) Applicable ASME Section XI Case(s): None
6. Identification Of Components

Name Of Component	Name Of Manufacturer	Manufacturer's Serial No	National Board No	Other I.D.	Year Built	Corrected, Removed Or Installed	ASME Code Stamped (Yes Or No) Code Class
CRD	General Electric	6246	N/A	N/A	1975	See Item 7 Below	Yes, Code Class 1
Piston Tube	General Electric	5786	N/A	N/A	1975	Removed	Yes, Code Class 1
Piston Tube	General Electric	0915	N/A	N/A	1996	Installed	Yes, Code Class 1

7. Description Of Work Performed: Overhauled Control Rod Drive (CRD) assembly Serial No 6246. The overhaul work was performed in accordance with plant procedure PPM No 10.5.4 "Control Rod Drive Overhaul" as follows:

1) Disassembled Control Rod Drive (CRD) assembly for overhaul.
2) Removed existing Piston Tube (PT) assembly Serial No 5786.
3) Installed replacement Piston Tube assembly Serial No 0915.
4) Reinstalled existing Cylinder Tube And Flange (CT&F) assembly Serial No 6246.
5) Reinstalled existing ring flange Serial No 2641.
6) Reinstalled existing piston tube nut Serial No 3080.
7) Reinstalled existing ring flange cap screws.

NOTES

1) The applicable ASME Code Cases, if any are listed on the ASME Code Data Reports.
2) The existing Piston Tube assembly Serial No 5786 is certified to comply with ASME Section III, Code Class 1, 1971 Edition with no Addenda.
3) The replacement Piston Tube assembly Serial No 0915 is certified to comply with ASME Section III, Code Class 1, 1974 Edition with Winter 1975 Addenda.
4) ASME pressure boundary (retaining) parts and materials such as Cylinder Tube And Flange (CT&F), ring flange, ring flange cap screws and piston tube nut were reinstalled (reused) during CRD overhaul activities with the exception of Piston Tube assembly which was replaced.
5) The entire Control Rod Drive (CRD) assembly is identified by the Cylinder Tube And Flange (CT&F) Serial No 6246.

WOT No 01145341 33

ENERGY NORTHWEST
People · Vision · Solutions

FORM NIS-2 OWNER'S REPORT FOR REPAIR/REPLACEMENT ACTIVITY (Back)

8 Tests Conducted: Hydrostatic [ ] **Pneumatic** [ ] **Nominal Operating Pressure** [ ] **Other** [ ]
Exempt [X] **Test Pressure:** Psig **Test Temperature:** °F

9. Remarks (Applicable Manufacturer's Data Reports to be attached): See attached N-2 Code Data Report for the following CRD part:

1) Replacement Piston Tube assembly Serial No 0915.

CERTIFICATE OF COMPLIANCE

I certify that the statements made in this Owner's Report are correct and that this conforms to the requirements of the ASME Code, Section XI.
Type Code Symbol Stamp: Not Applicable
Certificate Of Authorization No.: Not Applicable
Expiration Date: Not Applicable

Prepared By Kuldip Singh - Program Lead Engineer (PLE) ***Signed By*** Kuldip Singh - Program Lead Engineer (PLE)

Date 4/7/09 ***Date*** 4/7/09.

CERTIFICATE OF INSERVICE INSPECTION

I, the undersigned, holding a valid commission issued by the National Board of Boiler and Pressure Vessel Inspectors and the State of Washington ***and employed by*** Hartford Steam Boiler Of Connecticut of Hartford, Connecticut ***have inspected the components described in this Owner's Report during the period*** 10/29/2008 ***to*** 4/8/2009 ***and state to the best of my knowledge and belief, the Owner has performed examinations and taken corrective measures described in this Owner's Report in accordance with the requirements of the ASME Code, Section XI.***
By signing this certificate neither the Inspector nor his employer makes any warranty, expressed or implied, concerning the examinations and corrective measures described in this Owner's Report. Furthermore, neither the Inspector nor his employer shall be liable in any manner for any personal injury or property damage or a loss of any kind arising from or connected with this inspection.

Inspector's Signature ***Commissions*** 13172 WANI
National Board, State, and Endorsements

Date 4/8/2009

WOT No. 0114534133

FORM N-2 NPT CERTIFICATE HOLDERS' DATA REPORT FOR NUCLEAR PART AND APPURTENANCES*

As required by the Provision of the ASME Code Rules, Section III, Div. I

4/7/09.

1. Manufactured & Certified by : General Electric Company Nuclear Energy (GE-NE)

   3901 Castle Hayne Road, Wilmington, North Carolina 28401

   (Name and Address of NPT Certificate Holder)

   (b) Manufactured for : WNP 2 Richland, Washington 99352

   (Name and Address of N Certificate Holder for completed nuclear component)

2. Identification - Certificate Holder's S/N of Part : 0915 Nat'l Bd. No. N/A

   (a) Constructed According to Drawing No: 798D228G012 Rev 36 Dwg. Prepared by D. L. Peterson

   (b) Description of Part Inspected: Piston Tube Assembly

   (c) Applicable ASME Code: Section III , Edition 1974 , Addenda Date W'75 , Case No. 1361-2 Class 1

3. REMARKS: Standard part for use with Reactor. Hydrostatically tested at 1825 psi. min.

   (Brief description of service for which component was designed)

Sheet 1 of 2

We certify that the statements in this report are correct and this vessel part or appurtenance as defined in the code conforms to the rules of construction of the ASME Code Section III. (The applicable Designed Specification and Stress Report are not the responsibility of the NPT Certificate Holder for parts. An NPT Certification Holder for appurtenances is responsible for furnishing a separate Design Specification and Stress Report if the appurtenance is not included in the component Design Specification and Stress Report).

Date: 03/22/96 Signed GE-NE By

(NPT Certificate Holder) (SC QA Representive)

Certificate of Authorization Expires: 6/16/96 Certification of Authorization No. : NPT N - 1151

Certification of Design for Appurtenance

Design information on file at GE Company, San Jose, California

Stress analysis report on file at GE Company, San Jose, California

DC22A6253 Rev. 2
Design specification certified by B.N. Sridhar Prof. Eng. State Calif. Reg. No. 18345

DC22A6254 Rev 1
Stress analysis report certified by Edward Yoshio Prof. Eng. State Calif. Reg. No. M018646

Certification of Shop Inspection

I, the undersigned, holding a valid commission by the National Board of Boiler and Pressure Inspectors and/or the State or Province of North Carolina and employed by Department of Labor of State of North Carolina have inspected the part of a pressure vessel described in this Partial Data Report on 3/15, 1996, and state that to the best of my knowledge and belief, the NPT Certificate Holder has constructed this part in accordance with the ASME Code Section III.

By signing this certificate, neither the Inspector nor his employer makes any warranty, expressed or implied, concerning the part described in the Partial Data Report. Furthermore, neither the Inspector nor his employer shall be liable in any manner for any personal injury or property damages or a loss of any kind arising from or connected with this inspection.

3/22, 1996	Jerome P Ewen	NC 1231, Ohio, WC 3686 PA
Date	Inspector's Signature	National Board, State, Province And No.

*Supplemental sheets in form of lists, sketches or drawing may be used provided (1) size is 8-1/2" x 11", (2) information in 1-2 on this Data Report is included on each sheet, and (3) each sheet is numbered and number of sheets is recorded in Item 3. "REMARKS".

FORM N-2 (back)

Items 4-8 Incl. to be completed for single wall vessels, jackets vessels, or shells of heat exchangers.

4. Shell: Material _____ T.S. _____ Nominal Thickness ____ in. Corrosion Allowance ____ in. Dia. ____ ft. ____ in. Length ____ ft. ____ in.
(Kind & Spec. No.) (Min. of Range Specified)

5. Seams: Long _____ H.T.[1] _____ R.T. _____ Efficiency _____%
Girth _____ H.T.[1] _____ R.T. _____ No. of Courses _____

6. Heads: (a) Material _____ T.S. _____ (b) Material _____ T.S. _____

	Location (Top Bottom, Ends)	Thickness	Crown Radius	Knuckle Radius	Elliptical Ratio	Concial Apex Angle	Hemispherical Radius	Flat Diameter	Side to Press. (conv. or conc.)
(a)									
(b)									

If removable, bolts used _____ (Material, Spec. No., T.S. Size Number) Other fastening _____ (Describe or attach sketch)

7. Jacket Closure: _____
(Describe as ogee and weld, bar, etc. If bar give dimensions, if bolts, describe or sketch)

Drop Weight _____
Charpy Impact _____ ft-lb

8. Design pressure[2] 1250 psi at 575 °F at temp of _____ °F

Items 9 and 10 to be completed for tube sections

9. Tube Sheets: Stationary. Material _____ (Kind & Spec. No.) Dia. _____ (Subject to pressure) Thickness ____ in. Attachment _____ (Welded, Bolted)
Floating. Material _____ Dia. _____ Thickness ____ in. Attachment _____

10. Tubes: Material _____ O.D. _____ in. Thickness _____ inches or gage. Number _____ Type _____ (Str. or U)

Items 11 - 14 incl. to be completed for inner chambers of jacketed vessels, or channels of heat exchangers.

11. Shell: Material _____ T.S. _____ Nominal Thickness ____ in. Corrosion Allowance ____ in. Dia. ____ ft. ____ in. Length ____ ft. ____ in.
(Kind & Spec. No.) (Min. of Range Specified)

12. Seams: Long _____ H.T.[1] _____ R.T. _____ Efficiency _____%
Girth _____ H.T.[1] _____ R.T. _____ No. of Courses _____

13. Heads: (a) Material _____ T.S. _____ (b) Material _____ T.S. _____

	Location	Thickness	Crown Radius	Knuckle Radius	Elliptical Ratio	Concial Apex Angle	Hemispherical Radius	Flat Diameter	Side to Press. (conv. or conc.)
(a)	Top, bottom, ends								
(b)	Channel								

If removable, bolts used (a)_____ (b)_____ (c)_____ Other fastening _____ (Describe or attach sketch)

Drop Weight _____
Charpy Impact _____ ft-lb

14. Design pressure[2] _____ psi at _____ °F at temp of _____ °F

Items below to be completed for all vessels where applicable.

15. Safety Valve Outlets: Number _____ Size _____ Location _____

16. Nozzles:

Purpose (Inlet, Outlet, Drain)	Number	Dia. or Size	Type	Material	Thickness	Reinforcement Material	How Attached

17. Inspection Openings: Manholes, No. _____ Size _____ Location _____
Handholes, No. _____ Size _____ Location _____
Threaded, No. _____ Size _____ Location _____

18. Supports: Skirt _____ (Yes or No) Lugs _____ (Number) Legs _____ (Number) Other _____ (Describe) Attached _____ (Where & How)

[1] If Postweld Heat-Treated

[2] Other internal or external pressure with coincident temperature when applicable

FORM N-2 NPT CERTIFICATE HOLDERS' DATA REPORT FOR NUCLEAR PART AND APPURTENANCES*

As required by the Provision of the ASME Code Rules, Section III, Div. I

WOT NO. 01145341 33

1. Manufactured & Certified by : General Electric Company Nuclear Energy (GE-NE)

3901 Castle Hayne Road, Wilmington, North Carolina 28401

(Name and Address of NPT Certificate Holder)

Philip Smith 4/7/09.

(b) Manufactured for : WNP 2 Richland, Washington 99352

(Name and Address of N Certificate Holder for completed nuclear component)

2. Identification - Certificate Holder's S/N of Part : 0915 Nat'l Bd. No. N/A

(a) Constructed According to Drawing No: 798D228G012 Rev 36 Dwg. Prepared by D. L. Peterson

(b) Description of Part Inspected: Piston Tube Assembly

(c) Applicable ASME Code: Section III , Edition 1974 , Addenda Date W'75 , Case No. 1361-2 Class 1

3. REMARKS: Standard part for use with Reactor. Hydrostatically tested at 1825 psi. min.

(Brief description of service for which component was designed)

Sheet 2 of 2

1. Cap 166B9274P001
   SA182 - F316
   3/8" thick x 1 1/16" OD

2. Indicator Tube 167B4908P001
   SA312 - TP316
   3/4" sch 40 - seamless pipe
   0.113" wall thickness
   1.065" max. dia.

3. Plug 159A1176P001
   SA182 - F304
   1/4" thick x 0.812" OD

4. Flange 919D610P001 (719E474)
   SA182 - F304
   3.37" thick x 9 5/8" OD

5. Head 129B3539P005
   SA182 - F304
   7/8" thick x 2.875" dia.

6. Ring Flange 114B5122P002
   SA182 - F304
   1" thick x 5.0" OD x 1.75" ID

7. Cap Screw 117C4516P002
   SA193 - B6
   6 ea. 1/2" dia. on 4 1/8" bolt circle

8. Plug 175A7961P001
   SA182 - F304
   0.38" thick x 1.307" dia.

9. Nut 114B5460P001
   XM - 19 SA479
   1.30" thick x 2.62" dia.

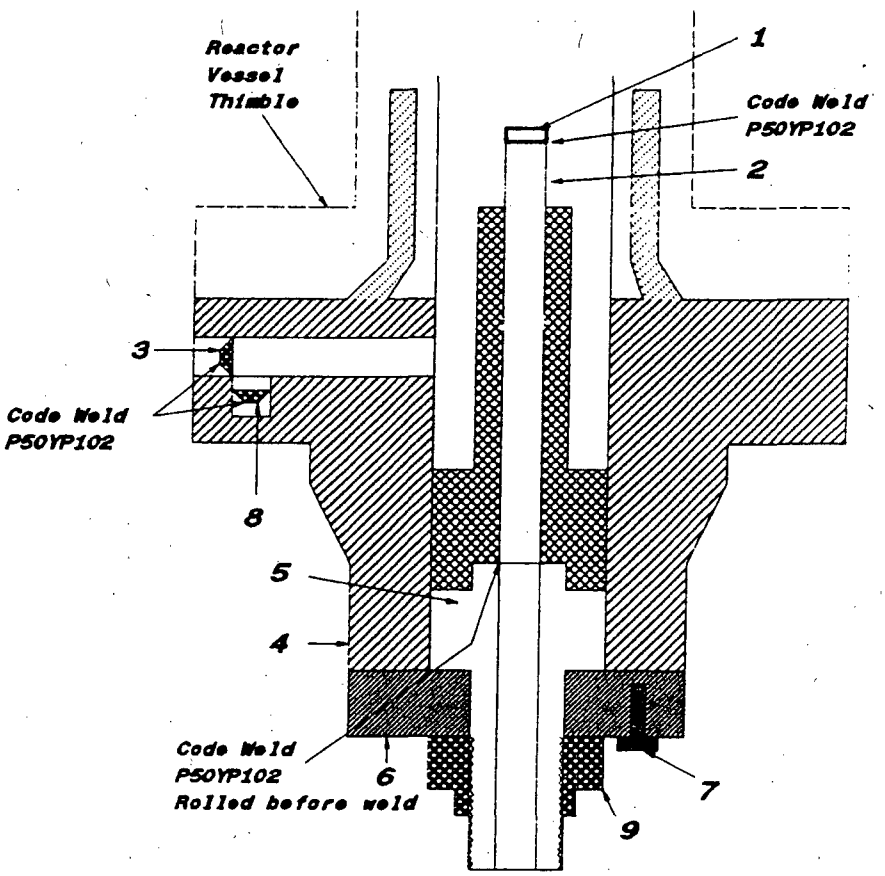

WOT No 01145341 34

ENERGY NORTHWEST
People · Vision · Solutions

FORM NIS-2 OWNER'S REPORT FOR REPAIR/REPLACEMENT ACTIVITY
As Required By The Provisions Of The ASME Code Section XI

Date: 04/06/2009
Sheet: 1 Of 1
Unit: Not Applicable

1. **Owner:** Energy Northwest
   Address: Columbia Generating Station, North Power Plant Loop, Richland, Washington, 99352
2. **Plant:** Columbia Generating Station
   Address: Columbia Generating Station, North Power Plant Loop, Richland, Washington, 99352
3. **(a) Work Performed By:** Energy Northwest/Scientech
   (b) Repair/Replacement Organization P.O. No, Job No, etc.: WO No 01145341/PO No 00327297
   (c) Type Code Symbol Stamp: Not Applicable
   (d) Certificate Of Authorization No.: Not Applicable
   (e) Expiration Date: Not Applicable
4. **Identification Of System:** Control Rod Drive (CRD)
5. **(a) Applicable Construction Code:** ASME Section III, Code Class 1 - See Notes For Code Edition, Addenda And Code Cases
   (b) Applicable Edition Of ASME Section XI Used For Repair/Replacement Activity: 2001 Edition with 2003 Addenda
   (c) Applicable ASME Section XI Case(s): None
6. **Identification Of Components**

Name Of Component	Name Of Manufacturer	Manufacturer's Serial No	National Board No	Other I.D.	Year Built	Corrected, Removed Or Installed	ASME Code Stamped (Yes Or No) Code Class
CRD	General Electric	7155	N/A	N/A	1975	See Item 7 Below	Yes, Code Class 1
Piston Tube	General Electric	5833	N/A	N/A	1975	Removed	Yes, Code Class 1
Piston Tube	General Electric	1129	N/A	N/A	2005	Installed	Yes, Code Class 1

7. **Description Of Work Performed:** Overhauled Control Rod Drive (CRD) assembly Serial No 7155. The overhaul work was performed in accordance with plant procedure PPM No 10.5.4 "Control Rod Drive Overhaul" as follows:
   1) Disassembled Control Rod Drive (CRD) assembly for overhaul.
   2) Removed existing Piston Tube (PT) assembly Serial No 5833.
   3) Installed replacement Piston Tube assembly Serial No 1129.
   4) Reinstalled existing Cylinder Tube And Flange (CT&F) assembly Serial No 7155.
   5) Reinstalled existing ring flange Serial No 2330.
   6) Reinstalled existing piston tube nut Serial No 2652.
   7) Reinstalled existing ring flange cap screws.

NOTES -

1) The applicable ASME Code Cases, if any are listed on the ASME Code Data Reports.
2) The existing Piston Tube assembly Serial No 5833 is certified to comply with ASME Section III, Code Class 1, 1971 Edition with no Addenda.
3) The replacement Piston Tube assembly Serial No 1129 is certified to comply with ASME Section III, Code Class 1, 1974 Edition with Winter 1975 Addenda.
4) ASME pressure boundary (retaining) parts and materials such as Cylinder Tube And Flange (CT&F), ring flange, ring flange cap screws and piston tube nut were reinstalled (reused) during CRD overhaul activities with the exception of Piston Tube assembly which was replaced.
5) The entire Control Rod Drive (CRD) assembly is identified by the Cylinder Tube And Flange (CT&F) Serial No 7155.

WOT No 01145341 34

ENERGY NORTHWEST
People · Vision · Solutions

FORM NIS-2 OWNER'S REPORT FOR REPAIR/REPLACEMENT ACTIVITY (Back)

8 Tests Conducted: Hydrostatic [ ] **Pneumatic** [ ] **Nominal Operating Pressure** [ ] **Other** [ ]
Exempt [X] **Test Pressure:** Psig **Test Temperature:** °F

9. Remarks (Applicable Manufacturer's Data Reports to be attached): See attached N-2 Code Data Report for the following CRD part:

1) Replacement Piston Tube assembly Serial No 1129.

CERTIFICATE OF COMPLIANCE

I certify that the statements made in this Owner's Report are correct and that this conforms to the requirements of the ASME Code, Section XI.
Type Code Symbol Stamp: Not Applicable
Certificate Of Authorization No.: Not Applicable
Expiration Date: Not Applicable

Prepared By Kuldip Singh - Program Lead Engineer (PLE) ***Signed By*** Kuldip Singh - Program Lead Engineer (PLE)

Date 4/7/09 ***Date*** 4/7/09.

CERTIFICATE OF INSERVICE INSPECTION

I, the undersigned, holding a valid commission issued by the National Board of Boiler and Pressure Vessel Inspectors and the State of Washington ***and employed by*** Hartford Steam Boiler Of Connecticut of Hartford, Connecticut ***have inspected the components described in this Owner's Report during the period*** 10/29/2008 ***to*** 4/13/2009 ***and state to the best of my knowledge and belief, the Owner has performed examinations and taken corrective measures described in this Owner's Report in accordance with the requirements of the ASME Code, Section XI.***
By signing this certificate neither the Inspector nor his employer makes any warranty, expressed or implied, concerning the examinations and corrective measures described in this Owner's Report. Furthermore, neither the Inspector nor his employer shall be liable in any manner for any personal injury or property damage or a loss of any kind arising from or connected with this inspection.

Inspector's Signature ***Commissions*** 13172 WANI
National Board, State, and Endorsements

Date 4/13/2009

WOT No. 0114534134

FORM N-2 CERTIFICATE HOLDERS' DATA REPORT FOR NUCLEAR PART AND APPURTENANCES*

As required by the Provision of the ASME code Rules, Section III, Division I

Dilip Singh

4/7/09.

1. Manufactured and certified by *General Electric Company Nuclear Energy (GE-NE)*
3901 Castle Hayne Road, Wilmington, North Carolina 28401
(Name and address of NPT Certificate Holder)

(b) Manufactured for COLUMBIA RICHLAND, WA. 99352
(Name and address of N Certificate Holder for completed nuclear component)

2. Identification - Certificate Holder's S/N of Part 1129 Nat'l Bd. No. N/A

(a) Constructed According to Drawing No. 798D228G012,REV.38 Prepared by P. PANSOY

(b) Description of Part Inspected PISTON TUBE ASSEMBLY

(c) Applicable ASME Code: Section III, Edition 1974 , Addenda Date W'75 , Case No. 1361-2 , Class 1

3. Remarks: STANDARD PART FOR USE WITH REACTOR. HYDROSTATICALLY TESTED AT 1350 PSI.MIN.
(Brief description of service for which component was designed)

We certify that the statements in this report are correct and this vessel part or appurtenance as defined in the code conforms to the rules of construction of the ASME Code Section III. (The applicable Designed Specification and Stress Report are not the responsibility of the NPT Certificate Holder for parts. An NPT Certification Holder for appurtenances is responsible for furnishing a separate Design Specification and Stress Report if the appurtenances is not included in the component Design Specification and Stress Report).

Date 7/13/05 Signed GE-NE (NPT Certificate Holder) By (SCQ Representative)

Certificate of Authorization Expires 6/16/2008 Certificate of Authorization No. NPT N-1151

CERTIFICATION OF DESIGN FOR APPURTENANCE

Design information on file at GE COMPANY, SAN JOSE, CALIFORNIA

Stress analysis report on file at GE COMPANY, SAN JOSE, CALIFORNIA

DC22A6253 Rev. 2
Design specification certified by B. N. SRIDHAR Prof. Eng. State CALIF. Reg. No. 18345

23A4920 Rev. 2
Stress analysis report certified by E. Y. GIBO Prof. Eng. State CALIF. Reg. No. M18646

CERTIFICATION OF SHOP INSPECTION

I, the undersigned, holding a valid commission by the National Board of Boiler and Pressure Inspectors and/or the State or Province of North Carolina and employed by Department of Labor of State of North Carolina have inspected the part of a pressure vessel described in this Partial Data Report on 7-13-2005, and state that to the best of my knowledge and belief, the NPT Certificate Holder has constructed this part in accordance with the ASME Code Section III.

By signing this certificate, neither the Inspector nor his employer makes any warranty, expressed or implied, concerning the part described in the Partial Data Report. Furthermore, neither the Inspector nor his employer shall be liable in any manner for any personal injury or property damages or a loss of any kind arising from or connected with this inspection.

7-13 2005 Clifford C. Dautrich NB 11725 ABN NS
Date Inspector's Signature National Board, State, Province and No.

*Supplemental sheets in form of lists, sketches or drawing may be used provided (1) size is 8 ½ " x 11", (2) information in 1-2 on the Data Report is included on each sheet, and (3) each sheet is numbered and number of sheets is recorded in item 3 "Remarks".

WOT No 01145341 35

ENERGY NORTHWEST
People·Vision·Solutions

FORM NIS-2 OWNER'S REPORT FOR REPAIR/REPLACEMENT ACTIVITY
As Required By The Provisions Of The ASME Code Section XI

1. Owner: Energy Northwest
Address: Columbia Generating Station, North Power Plant Loop, Richland, Washington, 99352
2. Plant: Columbia Generating Station
Address: Columbia Generating Station, North Power Plant Loop, Richland, Washington, 99352

Date: 04/06/2009
Sheet: 1 Of 1
Unit: Not Applicable

3. (a) Work Performed By: Energy Northwest/Scientech
(b) Repair/Replacement Organization P.O. No, Job No, etc.: WO No 01145341/PO No 00327297
(c) Type Code Symbol Stamp: Not Applicable
(d) Certificate Of Authorization No.: Not Applicable
(e) Expiration Date: Not Applicable
4. Identification Of System: Control Rod Drive (CRD)
5. (a) Applicable Construction Code: ASME Section III, Code Class 1 - See Notes For Code Edition, Addenda And Code Cases
(b) Applicable Edition Of ASME Section XI Used For Repair/Replacement Activity: 2001 Edition with 2003 Addenda
(c) Applicable ASME Section XI Case(s): None
6. Identification Of Components

Name Of Component	Name Of Manufacturer	Manufacturer's Serial No	National Board No	Other I.D.	Year Built	Corrected, Removed Or Installed	ASME Code Stamped (Yes Or No) Code Class
CRD	General Electric	6651	N/A	N/A	1975	See Item 7 Below	Yes, Code Class 1
CT&F	General Electric	6651	N/A	N/A	1975	Removed	Yes, Code Class 1
CT&F	General Electric	A9298	N/A	N/A	1996	Installed	Yes, Code Class 1

7. Description Of Work Performed: Overhauled Control Rod Drive (CRD) assembly Serial No 6651. The overhaul work was performed in accordance with plant procedure PPM No 10.5.4 "Control Rod Drive Overhaul" as follows:

1) Disassembled Control Rod Drive (CRD) assembly for overhaul.
2) Removed existing Cylinder Tube And Flange (CT&F) assembly Serial No 6651.
3) Installed replacement Cylinder Tube And Flange (CT&F) assembly Serial No A9298.
4) Reinstalled replacement Piston Tube assembly Serial No 6015.
5) Reinstalled existing ring flange Serial No 2487.
6) Reinstalled existing piston tube nut Serial No 3097.
7) Reinstalled existing ring flange cap screws.

NOTES -

1) The applicable ASME Code Cases, if any are listed on the ASME Code Data Reports.
2) The existing Cylinder Tube And Flange (CT&F) assembly Serial No 6651 is certified to comply with ASME Section III, Code Class 1, 1971 Edition with no Addenda.
3) The replacement Cylinder Tube And Flange (CT&F) assembly Serial No A9298 is certified to comply with ASME Section III, Code Class 1, 1974 Edition with Winter 1975 Addenda.
4) ASME pressure boundary (retaining) parts and materials such as ring flange, ring flange cap screws and piston tube nut, Piston Tube assembly were reinstalled (reused) during CRD overhaul activities with the exception of Cylinder Tube And Flange (CT&F) assembly which was replaced.
5) The entire Control Rod Drive (CRD) assembly is identified by the Cylinder Tube And Flange (CT&F) Serial No A9298.

WOT No 01145341 35

ENERGY NORTHWEST
People · Vision · Solutions

FORM NIS-2 OWNER'S REPORT FOR REPAIR/REPLACEMENT ACTIVITY (Back)

8 Tests Conducted: Hydrostatic [ ] **Pneumatic** [ ] **Nominal Operating Pressure** [ ] **Other** [ ]
Exempt [X] **Test Pressure:** Psig **Test Temperature:** °F

9. Remarks (Applicable Manufacturer's Data Reports to be attached): See attached N-2 Code Data Report for the following CRD part:

1) Replacement Cylinder Tube And Flange (CT&F) assembly Serial No A9298.

CERTIFICATE OF COMPLIANCE

I certify that the statements made in this Owner's Report are correct and that this conforms to the requirements of the ASME Code, Section XI.
Type Code Symbol Stamp: Not Applicable
Certificate Of Authorization No.: Not Applicable
Expiration Date: Not Applicable

Prepared By Kuldip Singh - Program Lead Engineer (PLE) ***Signed By*** Kuldip Singh - Program Lead Engineer (PLE)

Date 4/7/09 ***Date*** 4/7/09

CERTIFICATE OF INSERVICE INSPECTION

I, the undersigned, holding a valid commission issued by the National Board of Boiler and Pressure Vessel Inspectors and the State of Washington ***and employed by*** Hartford Steam Boiler Of Connecticut of Hartford, Connecticut ***have inspected the components described in this Owner's Report during the period*** 10/29/2008 ***to*** 4/13/2009 ***and state to the best of my knowledge and belief, the Owner has performed examinations and taken corrective measures described in this Owner's Report in accordance with the requirements of the ASME Code, Section XI.***
By signing this certificate neither the Inspector nor his employer makes any warranty, expressed or implied, concerning the examinations and corrective measures described in this Owner's Report. Furthermore, neither the Inspector nor his employer shall be liable in any manner for any personal injury or property damage or a loss of any kind arising from or connected with this inspection.

Inspector's Signature ***Commissions*** 1317Z WANI
National Board, State, and Endorsements

Date 4/13/2009

WOT No. 01145341 35

FORM N-2 NPT CERTIFICATE HOLDERS' DATA REPORT FOR NUCLEAR PART AND APPURTENANCES*

As required by the Provision of the ASME Code Rules, Section III, Div. I

Philip Smith 4/7/09.

1. Manufactured & Certified by : General Electric Company Nuclear Energy (GE-NE)
   3901 Castle Hayne Road, Wilmington, North Carolina 28401
   (Name and Address of NPT Certificate Holder)

   (b) Manufactured for : WNP 2 Richland, Washington 99352
   (Name and Address of N Certificate Holder for completed nuclear component)

2. Identification - Certificate Holder's S/N of Part : A9298 Nat'l Bd. No. N/A

   (a) Constructed According to Drawing No: 919D258G003 Rev 18 Dwg. Prepared by D. L. Peterson

   (b) Description of Part Inspected: Cylinder Tube & Flange

   (c) Applicable ASME Code: Section III , Edition 1974 , Addenda Date W'75 , Case No. 1361-2 Class 1

3. REMARKS: Standard part for use with Reactor. Hydrostatically tested at 1825 psi. min.
   (Brief description of service for which component was designed)

Sheet 1 of 2

We certify that the statements in this report are correct and this vessel part or appurtenance as defined in the code conforms to the rules of construction of the ASME Code Section III. (The applicable Designed Specification and Stress Report are not the responsibility of the NPT Certificate Holder for parts. An NPT Certification Holder for appurtenances is responsible for furnishing a separate Design Specification and Stress Report if the appurtenance is not included in the component Design Specification and Stress Report).

Date: 03/28/96 Signed GE-NE (NPT Certificate Holder) By C S Bazzett (SC QA Representive)

Certificate of Authorization Expires: 6/16/96 Certification of Authorization No. : NPT N - 1151

Certification of Design for Appurtenance

Design information on file at GE Company, San Jose, California

Stress analysis report on file at GE Company, San Jose, California

DC22A6253 Rev. 2
Design specification certified by B.N. Sridhar Prof. Eng. State Calif. Reg. No. 18345

DC22A6254 Rev 1
Stress analysis report certified by Edward Yoshio Prof. Eng. State Calif. Reg. No. M018646

Certification of Shop Inspection

I, the undersigned, holding a valid commission by the National Board of Boiler and Pressure Inspectors and/or the State or Province of North Carolina and employed by Department of Labor of State of North Carolina have inspected the part of a pressure vessel described in this Partial Data Report on 3-29, 96, and state that to the best of my knowledge and belief, the NPT Certificate Holder has constructed this part in accordance with the ASME Code Section III.
By signing this certificate, neither the Inspector nor his employer makes any warranty, expressed or implied, concerning the part described in the Partial Data Report. Furthermore, neither the Inspector nor his employer shall be liable in any manner for any personal injury or property damages or a loss of any kind arising from or connected with this inspection.

3-29, 96 Date — Inspector's Signature — NC 856 National Board, State, Province And No.

*Supplemental sheets in form of lists, sketches or drawing may be used provided (1) size is 8-1/2" x 11", (2) information in 1-2 on this Data Report is included on each sheet, and (3) each sheet is numbered and number of sheets is recorded in Item 3. "REMARKS".

(07/90)

FORM N-2 (back)

Items 4-8 Incl. to be completed for single wall vessels, jackets vessels, or shells of heat exchangers.

4. Shell: Material _____ T.S. _____ Nominal Thickness ___ in. Corrosion Allowance ___ in. Dia. ___ ft. ___ in. Length ___ ft. ___ in.
(Kind & Spec. No.) (Min. of Range Specified)

5. Seams: Long _____ H.T.[1] _____ R.T. _____ Efficiency _____%
Girth _____ H.T.[1] _____ R.T. _____ No. of Courses _____

6. Heads: (a) Material _____ T.S. _____ (b) Material _____ T.S. _____

	Location (Top Bottom, Ends)	Thickness	Crown Radius	Knuckle Radius	Elliptical Ratio	Concial Apex Angle	Hemispherical Radius	Flat Diameter	Side to Press. (conv. or conc.)
(a)									
(b)									

If removable, bolts used _____ (Material, Spec. No., T.S. Size Number) Other fastening _____ (Describe or attach sketch)

7. Jacket Closure: _____
(Describe as ogee and weld, bar, etc. If bar give dimensions, if bolts, describe or sketch)

Drop Weight _____
Charpy Impact _____ ft-lb

8. Design pressure[2] 1250 psi at 575 °F at temp of _____ °F

Items 9 and 10 to be completed for tube sections ?

9. Tube Sheets: Stationary. Material _____ (Kind & Spec. No.) Dia. _____ (Subject to pressure) Thickness ___ in. Attachment _____ (Welded, Bolted)
Floating. Material _____ Dia. _____ Thickness ___ in. Attachment _____

10. Tubes: Material _____ O.D. _____ in. Thickness _____ inches or gage. Number _____ Type _____ (Str. or ...)

Items 11 - 14 incl. to be completed for inner chambers of jacketed vessels, or channels of heat exchangers.

11. Shell: Material _____ T.S. _____ Nominal Thickness ___ in. Corrosion Allowance ___ in. Dia. ___ ft. ___ in. Length ___ ft. ___ in.
(Kind & Spec. No.) (Min. of Range Specified)

12. Seams: Long _____ H.T.[1] _____ R.T. _____ Efficiency _____%
Girth _____ H.T.[1] _____ R.T. _____ No. of Courses _____

13. Heads: (a) Material _____ T.S. _____ (b) Material _____ T.S. _____

	Location	Thickness	Crown Radius	Knuckle Radius	Elliptical Ratio	Concial Apex Angle	Hemispherical Radius	Flat Diameter	Side to Press. (conv. or conc.)
(a)	Top, bottom, ends								
(b)	Channel								

If removable, bolts used (a)_____ (b)_____ (c)_____ Other fastening _____ (Describe or attach sketch)

Drop Weight _____
Charpy Impact _____ ft-lb

14. Design pressure[2] _____ psi at _____ °F at temp of _____ °F

Items below to be completed for all vessels where applicable.

15. Safety Valve Outlets: Number _____ Size _____ Location _____

16. Nozzles:

Purpose (Inlet, Outlet, Drain)	Number	Dia. or Size	Type	Material	Thickness	Reinforcement Material	How Attached

17. Inspection Openings: Manholes, No. _____ Size _____ Location _____
Handholes, No. _____ Size _____ Location _____
Threaded, No. _____ Size _____ Location _____

18. Supports: Skirt _____ (Yes or No) Lugs _____ (Number) Legs _____ (Number) Other _____ (Describe) Attached _____ (Where & How)

1 - If Postweld Heat-Treated.
2 - List other internal or external pressure with coincident temperature when applicable.

WOT No. 01145341 35

FORM N-2 NPT CERTIFICA IOLDERS' DATA REPORT FOR NUCLE 'ART AND APPURTENANCES*

As required by the Provision of the ASME Code Rule., Section III, Div. I

1. Manufactured & Certified by : General Electric Company Nuclear Energy (GE-NE) Philip Smith 4/7/09.

   3901 Castle Hayne Road, Wilmington, North Carolina 28401

   (Name and Address of NPT Certificate Holder)

   (b) Manufactured for : WNP 2 Richland, Washington 99352

   (Name and Address of N Certificate Holder for completed nuclear component)

2. Identification - Certificate Holder's S/N of Part : A9298 Nat'l Bd. No. N/A

   (a) Constructed According to Drawing No: 919D258G003 Rev 18 Dwg. Prepared by D. L. Peterson

   (b) Description of Part Inspected: Cylinder Tube & Flange

   (c) Applicable ASME Code: Section III , Edition 1974 , Addenda Date W'75 , Case No. 1361-2 Class 1

3. REMARKS: Standard part for use with Reactor. Hydrostatically tested at 1825 psi. min.

   (Brief description of service for which component was designed)

1. Cap 166B9274P001
   SA182 - F316
   3/8" thick x 1 1/16" OD

2. Indicator Tube 167B4908P001
   SA312 - TP316
   3/4" sch 40 - seamless pipe
   0.113" wall thickness
   1.065" max. dia.

3. Plug 159A1176P001
   SA182 - F304
   1/4" thick x 0.812" OD

4. Flange 919D610P001 (719E474)
   SA182 - F304
   3.37" thick x 9 5/8" OD

5. Head 129B3539P005
   SA182 - F304
   7/8" thick x 2.875" dia.

6. Ring Flange 114B5122P002
   SA182 - F304
   1" thick x 5.0" OD x 1.75" ID

7. Cap Screw 117C4516P002
   SA193 - B6
   6 ea. 1/2" dia. on 4 1/8" bolt circle

8. Plug 175A7961P001
   SA182 - F304
   0.38" thick x 1.307" dia.

9. Nut 114B5460P001
   XM - 19 SA479
   1.30" thick x 2.62" dia.

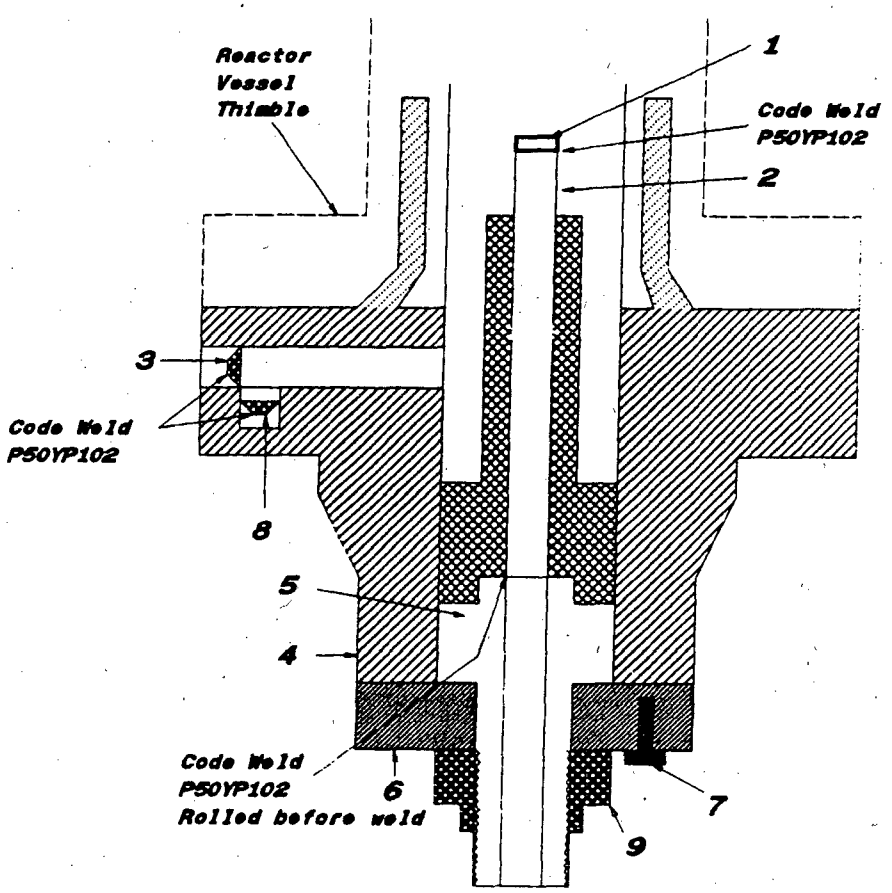

WOT No 01145341 37

ENERGY NORTHWEST
People · Vision · Solutions

FORM NIS-2 OWNER'S REPORT FOR REPAIR/REPLACEMENT ACTIVITY
As Required By The Provisions Of The ASME Code Section XI

1. Owner: Energy Northwest
Address: Columbia Generating Station, North Power Plant Loop, Richland, Washington, 99352
2. Plant: Columbia Generating Station
Address: Columbia Generating Station, North Power Plant Loop, Richland, Washington, 99352

Date: 04/07/2009
Sheet: 1 Of 1
Unit: Not Applicable

3. (a) Work Performed By: Energy Northwest/Scientech
(b) Repair/Replacement Organization P.O. No, Job No, etc.: WO No 01145341/PO No 00327297
(c) Type Code Symbol Stamp: Not Applicable
(d) Certificate Of Authorization No.: Not Applicable
(e) Expiration Date: Not Applicable
4. Identification Of System: Control Rod Drive (CRD)
5. (a) Applicable Construction Code: ASME Section III, Code Class 1 - See Notes For Code Edition, Addenda And Code Cases
(b) Applicable Edition Of ASME Section XI Used For Repair/Replacement Activity: 2001 Edition with 2003 Addenda
(c) Applicable ASME Section XI Case(s): None
6. Identification Of Components

Name Of Component	Name Of Manufacturer	Manufacturer's Serial No	National Board No	Other I.D.	Year Built	Corrected, Removed Or Installed	ASME Code Stamped (Yes Or No) Code Class
CRD	General Electric	A8548	N/A	N/A	1987	See Item 7 Below	Yes, Code Class 1
Piston Tube	General Electric	6868	N/A	N/A	1975	Removed	Yes, Code Class 1
Piston Tube	General Electric	1130	N/A	N/A	2005	Installed	Yes, Code Class 1

7. Description Of Work Performed: Overhauled Control Rod Drive (CRD) assembly Serial No A8548. The overhaul work was performed in accordance with plant procedure PPM No 10.5.4 "Control Rod Drive Overhaul" as follows:

1) Disassembled Control Rod Drive (CRD) assembly for overhaul.
2) Removed existing Piston Tube (PT) assembly Serial No 6868.
3) Installed replacement Piston Tube assembly Serial No 1130.
4) Reinstalled existing Cylinder Tube And Flange (CT&F) assembly Serial No A8548.
5) Reinstalled existing ring flange Serial No 2519.
6) Reinstalled existing piston tube nut Serial No 3135.
7) Reinstalled existing ring flange cap screws.

NOTES -

1) The applicable ASME Code Cases, if any are listed on the ASME Code Data Reports.
2) The existing Piston Tube assembly Serial No 6868 is certified to comply with ASME Section III, Code Class 1, 1971 Edition with no Addenda.
3) The replacement Piston Tube assembly Serial No 1130 is certified to comply with ASME Section III, Code Class 1, 1974 Edition with Winter 1975 Addenda.
4) ASME pressure boundary (retaining) parts and materials such as Cylinder Tube And Flange (CT&F), ring flange, ring flange cap screws and piston tube nut were reinstalled (reused) during CRD overhaul activities with the exception of Piston Tube assembly which was replaced.
5) The entire Control Rod Drive (CRD) assembly is identified by the Cylinder Tube And Flange (CT&F) Serial No A8548.

WOT No 01145341 37

ENERGY NORTHWEST
People · Vision · Solutions

FORM NIS-2 OWNER'S REPORT FOR REPAIR/REPLACEMENT ACTIVITY (Back)

8 Tests Conducted: Hydrostatic [ ] **Pneumatic** [ ] **Nominal Operating Pressure** [ ] **Other** [ ]
Exempt [X] **Test Pressure:** Psig **Test Temperature:** °F

9. Remarks (Applicable Manufacturer's Data Reports to be attached): See attached N-2 Code Data Report for the following CRD part:

1) Replacement Piston Tube assembly Serial No 1130.

CERTIFICATE OF COMPLIANCE

I certify that the statements made in this Owner's Report are correct and that this conforms to the requirements of the ASME Code, Section XI.
Type Code Symbol Stamp: Not Applicable
Certificate Of Authorization No.: Not Applicable
Expiration Date: Not Applicable

Prepared By Kuldip Singh - Program Lead Engineer (PLE) ***Signed By*** Kuldip Singh - Program Lead Engineer (PLE)

Date 4/7/09 ***Date*** 4/7/09

CERTIFICATE OF INSERVICE INSPECTION

I, the undersigned, holding a valid commission issued by the National Board of Boiler and Pressure Vessel Inspectors and the State of Washington ***and employed by*** Hartford Steam Boiler Of Connecticut of Hartford, Connecticut ***have inspected the components described in this Owner's Report during the period*** 10/29/2008 ***to*** 4/13/2009 ***and state to the best of my knowledge and belief, the Owner has performed examinations and taken corrective measures described in this Owner's Report in accordance with the requirements of the ASME Code, Section XI.***
By signing this certificate neither the Inspector nor his employer makes any warranty, expressed or implied, concerning the examinations and corrective measures described in this Owner's Report. Furthermore, neither the Inspector nor his employer shall be liable in any manner for any personal injury or property damage or a loss of any kind arising from or connected with this inspection.

Inspector's Signature ***Commissions*** 13172 WANI
National Board, State, and Endorsements

Date 4/13/2009

WOT No. 01145341 37

FORM N-2 CERTIFICATE HOLDERS' DATA REPORT FOR NUCLEAR PART AND APPURTENANCES*

As required by the Provision of the ASME code Rules, Section III, Division I

Philip Smith 4/9/09.

1. Manufactured and certified by *General Electric Company Nuclear Energy (GE-NE)*
3901 Castle Hayne Road, Wilmington, North Carolina 28401
(Name and address of NPT Certificate Holder)

(b) Manufactured for COLUMBIA RICHLAND, WA. 99352
(Name and address of N Certificate Holder for completed nuclear component)

2. Identification - Certificate Holder's S/N of Part 1130 Nat'l Bd. No. N/A

(a) Constructed According to Drawing No. 798D228G012,REV.38 Prepared by P. PANSOY

(b) Description of Part Inspected PISTON TUBE ASSEMBLY

(c) Applicable ASME Code: Section III, Edition 1974 , Addenda Date W'75 , Case No. 1361-2 , Class 1

3. Remarks: STANDARD PART FOR USE WITH REACTOR. HYDROSTATICALLY TESTED AT 1850 PSI.MIN.
(Brief description of service for which component was designed)

We certify that the statements in this report are correct and this vessel part or appurtenance as defined in the code conforms to the rules of construction of the ASME Code Section III. (The applicable Designed Specification and Stress Report are not the responsibility of the NPT Certificate Holder for parts. An NPT Certification Holder for appurtenances is responsible for furnishing a separate Design Specification and Stress Report if the appurtenances is not included in the component Design Specification and Stress Report).

Date 7/13/05 Signed GE-NE (NPT Certificate Holder) By [signature] (SQQ Representative)

Certificate of Authorization Expires 6/16/2008 Certificate of Authorization No. NPT N-1151

CERTIFICATION OF DESIGN FOR APPURTENANCE

Design information on file at GE COMPANY, SAN JOSE, CALIFORNIA

Stress analysis report on file at GE COMPANY, SAN JOSE, CALIFORNIA

DC22A6253 Rev. 2
Design specification certified by B. N. SRIDHAR Prof. Eng. State CALIF. Reg. No. 18345

23A4920 Rev. 2
Stress analysis report certified by E. Y. GIBO Prof. Eng. State CALIF. Reg. No. M18646

CERTIFICATION OF SHOP INSPECTION

I, the undersigned, holding a valid commission by the National Board of Boiler and Pressure Inspectors and/or the State or Province of North Carolina and employed by Department of Labor of State of North Carolina have inspected the part of a pressure vessel described in this Partial Data Report on 7-13-2005 and state that to the best of my knowledge and belief, the NPT Certificate Holder has constructed this part in accordance with the ASME Code Section III.

By signing this certificate, neither the Inspector nor his employer makes any warranty, expressed or implied, concerning the part described in the Partial Data Report. Furthermore, neither the Inspector nor his employer shall be liable in any manner for any personal injury or property damages or a loss of any kind arising from or connected with this inspection.

7-13-2005 Date — Clifford C. Dantor Inspector's Signature — NB 11725 ABN NS National Board, State, Province and No.

*Supplemental sheets in form of lists, sketches or drawing may be used provided (1) size is 8 ½ " x 11", (2) information in 1-2 on the Data Report is included on each sheet, and (3) each sheet is numbered and number of sheets is recorded in item 3 "Remarks".

WOT No 01145341 38

ENERGY NORTHWEST
People · Vision · Solutions

FORM NIS-2 OWNER'S REPORT FOR REPAIR/REPLACEMENT ACTIVITY
As Required By The Provisions Of The ASME Code Section XI

1. Owner: Energy Northwest
Address: Columbia Generating Station, North Power Plant Loop, Richland, Washington, 99352
2. Plant: Columbia Generating Station
Address: Columbia Generating Station, North Power Plant Loop, Richland, Washington, 99352

Date: 04/07/2009
Sheet: 1 Of 1
Unit: Not Applicable

3. (a) Work Performed By: Energy Northwest/Scientech
(b) Repair/Replacement Organization P.O. No, Job No, etc.: WO No 01145341/PO No 00327297
(c) Type Code Symbol Stamp: Not Applicable
(d) Certificate Of Authorization No.: Not Applicable
(e) Expiration Date: Not Applicable
4. Identification Of System: Control Rod Drive (CRD)
5. (a) Applicable Construction Code: ASME Section III, Code Class 1 - See Notes For Code Edition, Addenda And Code Cases
(b) Applicable Edition Of ASME Section XI Used For Repair/Replacement Activity: 2001 Edition with 2003 Addenda
(c) Applicable ASME Section XI Case(s): None
6. Identification Of Components

Name Of Component	Name Of Manufacturer	Manufacturer's Serial No	National Board No	Other I.D.	Year Built	Corrected, Removed Or Installed	ASME Code Stamped (Yes Or No) Code Class
CRD	General Electric	A8727	N/A	N/A	1989	See Item 7 Below	Yes, Code Class 1
Piston Tube	General Electric	5810	N/A	N/A	1975	Removed	Yes, Code Class 1
Piston Tube	General Electric	0821	N/A	N/A	1995	Installed	Yes, Code Class 1

7. Description Of Work Performed: Overhauled Control Rod Drive (CRD) assembly Serial No A8727. The overhaul work was performed in accordance with plant procedure PPM No 10.5.4 "Control Rod Drive Overhaul" as follows:

1) Disassembled Control Rod Drive (CRD) assembly for overhaul.
2) Removed existing Piston Tube (PT) assembly Serial No 5810.
3) Installed replacement Piston Tube assembly Serial No 0821.
4) Reinstalled existing Cylinder Tube And Flange (CT&F) assembly Serial No A8727.
5) Reinstalled existing ring flange Serial No 2756.
6) Reinstalled existing piston tube nut Serial No 3114.
7) Reinstalled existing ring flange cap screws.

NOTES

1) The applicable ASME Code Cases, if any are listed on the ASME Code Data Reports.
2) The existing Piston Tube assembly Serial No 5810 is certified to comply with ASME Section III, Code Class 1, 1971 Edition with no Addenda.
3) The replacement Piston Tube assembly Serial No 0821 is certified to comply with ASME Section III, Code Class 1, 1974 Edition with Winter 1975 Addenda.
4) ASME pressure boundary (retaining) parts and materials such as Cylinder Tube And Flange (CT&F), ring flange, ring flange cap screws and piston tube nut were reinstalled (reused) during CRD overhaul activities with the exception of Piston Tube assembly which was replaced.
5) The entire Control Rod Drive (CRD) assembly is identified by the Cylinder Tube And Flange (CT&F) Serial No A8727.

WOT No 01145341 38

ENERGY NORTHWEST
People · Vision · Solutions

FORM NIS-2 OWNER'S REPORT FOR REPAIR/REPLACEMENT ACTIVITY (Back)

8 Tests Conducted: Hydrostatic [ ] **Pneumatic** [ ] **Nominal Operating Pressure** [ ] **Other** [ ]
Exempt [X] **Test Pressure:** Psig **Test Temperature:** °F

9. Remarks (Applicable Manufacturer's Data Reports to be attached): See attached N-2 Code Data Report for the following CRD part:

1) Replacement Piston Tube assembly Serial No 0821.

CERTIFICATE OF COMPLIANCE

I certify that the statements made in this Owner's Report are correct and that this conforms to the requirements of the ASME Code, Section XI.
Type Code Symbol Stamp: Not Applicable
Certificate Of Authorization No.: Not Applicable
Expiration Date: Not Applicable

Prepared By Kuldip Singh - Program Lead Engineer (PLE) ***Signed By*** Kuldip Singh - Program Lead Engineer (PLE)

Date 4/7/09 ***Date*** 4/7/09.

CERTIFICATE OF INSERVICE INSPECTION

I, the undersigned, holding a valid commission issued by the National Board of Boiler and Pressure Vessel Inspectors and the State of Washington ***and employed by*** Hartford Steam Boiler Of Connecticut of Hartford, Connecticut ***have inspected the components described in this Owner's Report during the period*** 10/29/2008 ***to*** 4/13/2009 ***and state to the best of my knowledge and belief, the Owner has performed examinations and taken corrective measures described in this Owner's Report in accordance with the requirements of the ASME Code, Section XI.***
By signing this certificate neither the Inspector nor his employer makes any warranty, expressed or implied, concerning the examinations and corrective measures described in this Owner's Report. Furthermore, neither the Inspector nor his employer shall be liable in any manner for any personal injury or property damage or a loss of any kind arising from or connected with this inspection.

Inspector's Signature ***Commissions*** 13172 WANI
National Board, State, and Endorsements

Date 4/13/2009

WO1 No. 01145341 38

FORM N-2 NPT CERTIFICATE HOLDERS' DATA REPORT FOR NUCLEAR PART AND APPURTENANCES*

As required by the Provision of the ASME Code Rules, Section III, Div. I

1. Manufactured & Certified by : General Electric Company Nuclear Fuel & Components Manufacturing (GE NF & CM)
2117 Castle Hayne Road, Wilmington, North Carolina 28401 4/7/05.
(Name and Address of NPT Certificate Holder)

(b) Manufactured for : WNP 2 Richland, Washington 99352
(Name and Address of N Certificate Holder for completed nuclear component)

2. Identification - Certificate Holder's S/N of Part : 0821 Nat'l Bd. No. N/A

(a) Constructed According to Drawing No: 798D228G012 Rev 36 Dwg. Prepared by D. L. Peterson

(b) Description of Part Inspected: Piston Tube Assembly

(c) Applicable ASME Code: Section III , Edition 1974 , Addenda Date W'75 , Case No. 1361-2 Class 1

3. REMARKS: Standard part for use with Reactor. Hydrostatically tested at 1825 psi. min.
(Brief description of service for which component was designed)

Sheet 1 of 2

We certify that the statements in this report are correct and this vessel part or appurtenance as defined in the code conforms to the rules of construction of the ASME Code Section III. (The applicable Designed Specification and Stress Report are not the responsibility of the NPT Certificate Holder for parts. An NPT Certification Holder for appurtenances is responsible for furnishing a separate Design Specification and Stress Report if the appurtenance is not included in the component Design Specification and Stress Report).

Date: 06/27/95 Signed GE - NEBG - NF & CM - QA By
(NPT Certificate Holder) (GE QA Representive)

Certificate of Authorization Expires: 6/16/96 Certification of Authorization No. : NPT N - 1151

Certification of Design for Appurtenance

Design information on file at GE Company, San Jose, California

Stress analysis report on file at GE Company, San Jose, California

DC22A6253 Rev. 1
Design specification certified by Bjorn Haaberg Prof. Eng. State Calif. Reg. No. 15570

DC22A6254 Rev 1
Stress analysis report certified by Edward Yoshio Prof. Eng. State Calif. Reg. No. M018646

Certification of Shop Inspection

I, the undersigned, holding a valid commission by the National Board of Boiler and Pressure Inspectors and/or the State or Province of North Carolina and employed by Department of Labor of State of North Carolina have inspected the part of a pressure vessel described in this Partial Data Report on 6/15, 1994, and state that to the best of my knowledge and belief, the NPT Certificate Holder has constructed this part in accordance with the ASME Code Section III.
By signing this certificate, neither the Inspector nor his employer makes any warranty, expressed or implied, concerning the part described in the Partial Data Report. Furthermore, neither the Inspector nor his employer shall be liable in any manner for any personal injury or property damages or a loss of any kind arising from or connected with this inspection.

6/27, 1995 Jerome P Ewen NC 1231, Ohio, WC 3686 PA
Date Inspector's Signature National Board, State, Province And No.

Supplemental sheets in form of lists, sketches or drawing may be used provided (1) size is 8-1/2" x 11", (2) information in 1-2 on this Data Report is included on each sheet, and (3) each sheet is numbered and number of sheets is recorded in Item 3. "REMARKS".

(07/90)

FORM N-2 (back)

Items 4-8 Incl. to be completed for single wall vessels, jackets vessels, or shells of heat exchangers.

4. Shell: Material _____ T.S. _____ Nominal Thickness ___ in. Corrosion Allowance ___ in. Dia. ___ ft. ___ in. Length ___ ft. ___ in.
(Kind & Spec. No.) (Min. of Range Specified)

5. Seams: Long _____ H.T.[1] _____ R.T. _____ Efficiency _____%
Girth _____ H.T.[1] _____ R.T. _____ No. of Courses _____

6. Heads: (a) Material _____ T.S. _____ (b) Material _____ T.S. _____

	Location (Top Bottom, Ends)	Thickness	Crown Radius	Knuckle Radius	Elliptical Ratio	Concial Apex Angle	Hemispherical Radius	Flat Diameter	Side to Press. (conv. or conc.)
(a)									
(b)									

If removable, bolts used _____ (Material, Spec. No., T.S. Size Number) Other fastening _____ (Describe or attach sketch)

7. Jacket Closure: _____
(Describe as ogee and weld, bar, etc. If bar give dimensions, if bolts, describe or sketch)

Drop Weight _____
Charpy Impact _____ ft-lb

8. Design pressure[2] _____1250_____ psi at _____575_____ °F at temp of _____ °F

Items 9 and 10 to be completed for tube sections

9. Tube Sheets: Stationary. Material _____ (Kind & Spec. No.) Dia. _____ (Subject to pressure) Thickness ___ in. Attachment _____ (Welded, Bolted)
Floating. Material _____ Dia. _____ Thickness ___ in. Attachment _____

10. Tubes: Material _____ O.D. _____ in. Thickness _____ inches or gage. Number _____ Type _____ (Str. or U)

Items 11 - 14 incl. to be completed for inner chambers of jacketed vessels, or channels of heat exchangers.

11. Shell: Material _____ T.S. _____ Nominal Thickness ___ in. Corrosion Allowance ___ in. Dia. ___ ft. ___ in. Length ___ ft. ___ in.
(Kind & Spec. No.) (Min. of Range Specified)

12. Seams: Long _____ H.T.[1] _____ R.T. _____ Efficiency _____%
Girth _____ H.T.[1] _____ R.T. _____ No. of Courses _____

13. Heads: (a) Material _____ T.S. _____ (b) Material _____ T.S. _____

	Location	Thickness	Crown Radius	Knuckle Radius	Elliptical Ratio	Concial Apex Angle	Hemispherical Radius	Flat Diameter	Side to Press. (conv. or conc.)
(a)	Top, bottom, ends								
(b)	Channel								

If removable, bolts used (a)_____(b)_____(c)_____ Other fastening _____ (Describe or attach sketch)

Drop Weight _____
Charpy Impact _____ ft-lb

14. Design pressure[2] _____ psi at _____ °F at temp of _____ °F

Items below to be completed for all vessels where applicable.

15. Safety Valve Outlets: Number _____ Size _____ Location _____

16. Nozzles:

Purpose (Inlet, Outlet, Drain)	Number	Dia. or Size	Type	Material	Thickness	Reinforcement Material	How Attached

17. Inspection Openings: Manholes, No. _____ Size _____ Location _____
Handholes, No. _____ Size _____ Location _____
Threaded, No. _____ Size _____ Location _____

18. Supports: Skirt _____ (Yes or No) Lugs _____ (Number) Legs _____ (Number) Other _____ (Describe) Attached _____ (Where & How)

[1] - If Postweld Heat-Treated.
[2] - Any other internal or external pressure with coincident temperature when applicable.

WOT NO. 01145341 38

FORM N-2 NPT CERTIFICATE HOLDERS' DATA REPORT FOR NUCLEAR PARTS AND APPURTENANCES*

As required by the Provision of the ASME Code Rules, Section III, Div. I

1. Manufactured & Certified by : General Electric Company Nuclear Fuel & Components Manufacturing (GE NF & CM)
   2117 Castle Hayne Road, Wilmington, North Carolina 28401 4/7/09
   (Name and Address of NPT Certificate Holder)

   (b) Manufactured for : WNP 2 Richland, Washington 99352
   (Name and Address of N Certificate Holder for completed nuclear component)

2. Identification - Certificate Holder's S/N of Part : 0821 Nat'l Bd. No. N/A

   (a) Constructed According to Drawing No: 798D228G012 Rev 36 Dwg. Prepared by D. L. Peterson

   (b) Description of Part Inspected: Piston Tube Assembly

   (c) Applicable ASME Code: Section III , Edition 1974 , Addenda Date W'75 , Case No. 1361-2 Class 1

3. REMARKS: Standard part for use with Reactor. Hydrostatically tested at 1825 psi. min.
   (Brief description of service for which component was designed)

1. Cap 166B9274P001
   SA182 - F316
   3/8" thick x 1 1/16" OD

2. Indicator Tube 167B4908P001
   SA312 - TP316
   3/4" sch 40 - seamless pipe
   0.113" wall thickness
   1.065" max. dia.

3. Plug 159A1176P001
   SA182 - F304
   1/4" thick x 0.812" OD

4. Flange 919D610P001 (719E474)
   SA182 - F304
   3.37" thick x 9 5/8" OD

5. Head 129B3539P005
   SA182 - F304
   7/8" thick x 2.875" dia.

6. Ring Flange 114B5122P002
   SA182 - F304
   1" thick x 5.0" OD x 1.75" ID

7. Cap Screw 117C4516P002
   SA193 - B6
   6 ea. 1/2" dia. on 4 1/8" bolt circle

8. Plug 175A7961P001
   SA182 - F304
   0.38" thick x 1.307" dia.

9. Nut 114B5460P001
   XM - 19 SA479
   1.30" thick x 2.62" dia.

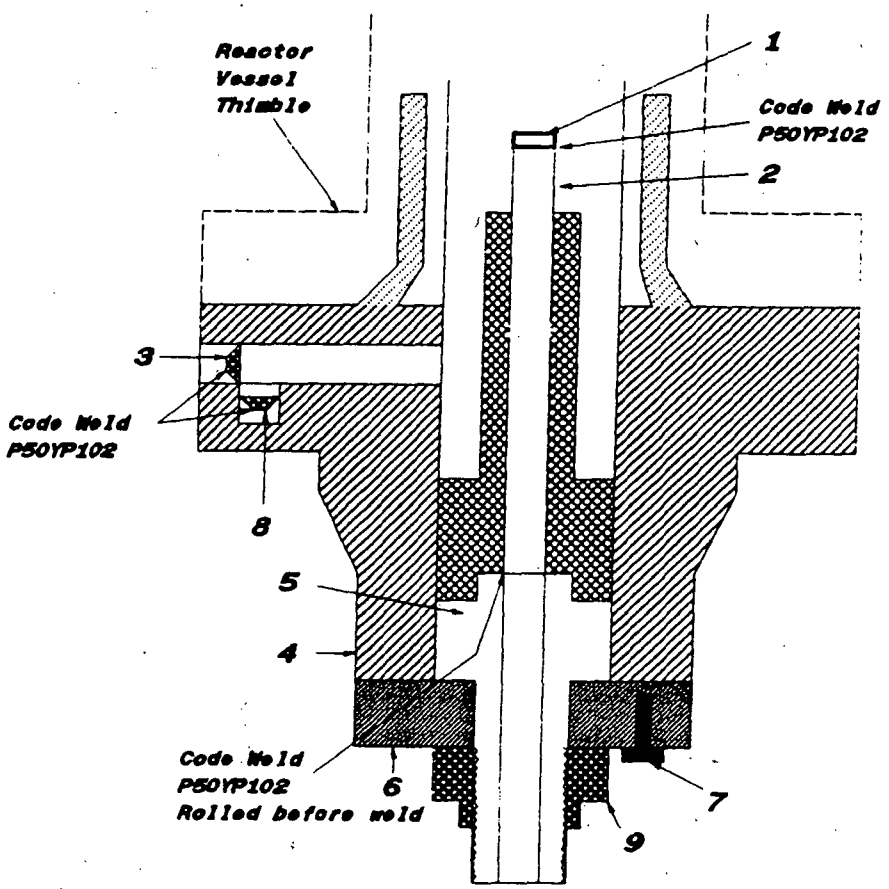

WOT No 01142671 06

ENERGY NORTHWEST
People·Vision·Solutions

FORM NIS-2 OWNER'S REPORT FOR REPAIR/REPLACEMENT ACTIVITY
As Required By The Provisions Of The ASME Code Section XI

1. Owner: Energy Northwest
Address: Columbia Generating Station, North Power Plant Loop, Richland, Washington, 99352
2. Plant: Columbia Generating Station
Address: Columbia Generating Station, North Power Plant Loop, Richland, Washington, 99352

Date: 06/15/2009
Sheet: 1 Of 1
Unit: Not Applicable

3. (a) Work Performed By: Energy Northwest
(b) Repair/Replacement Organization P.O. No, Job No, etc.: Energy Northwest
(c) Type Code Symbol Stamp: Not Applicable
(d) Certificate Of Authorization No.: Not Applicable
(e) Expiration Date: Not Applicable
4. Identification Of System: Control Rod Drive (CRD) System
5. (a) Applicable Construction Code: ASME Section III, Code Class 1, 1971 Edition with no Addenda, Code Case: Note 1
(b) Applicable Edition Of ASME Section XI Used For Repair/Replacement Activity: 2001 Edition with 2003 Addenda
(c) Applicable ASME Section XI Case(s): None
6. Identification Of Components

Name Of Component	Name Of Manufacturer	Manufacturer's Serial No	National Board No	Other I.D.	Year Built	Corrected, Removed Or Installed	ASME Code Stamped (Yes Or No) Code Class
CRD	GE	7492	N/A	N/A	1975	Removed	Yes, Code Class 1
CRD	GE	7376	N/A	N/A	1975	Installed	Yes, Code Class 1

7. Description Of Work Performed: Replaced Control Rod Drive (CRD) assembly at Core Location 18-19. The replacement work was performed in accordance with plant procedure PPM No 10.5.7 "Control Rod Drive Removal And Replacement" as follows:

1) Removed all eight (8) existing cap screws from the CRD assembly bolted flanged connection.
2) Removed existing CRD assembly, Serial No 7492.
3) Performed VT-1 visual examination on all eight (8) new replacement cap screws. VT-1 visual examination results acceptable.
4) Installed replacement CRD assembly, Serial No 7376.
5) Installed eight (8) VT-1 visually examined new replacement cap screws for the CRD assembly bolted flanged connection.
6) Torqued the cap screws for the CRD assembly bolted flanged connection to the required torque values.
7) Performed VT-2 visual examination during pressure test on CRD assembly bolted flanged connection to confirm pressure boundary integrity of the joint. No leakage was observed during pressure test.

NOTES

1) The applicable ASME Code Cases, if any are listed on the ASME Code Data Reports.
2) The replacement CRD assembly, Serial No 7376 is certified to comply with ASME Section III, Code Class 1, 1971 Edition with no Addenda requirements.
3) Eight (8) new replacement cap screws, SA-540 Gr. B23, Class 4, Heat No 56624, Heat (Trace) Code No OH50.
4) VT-1 visual examination Report No 3RPV-001 for the new replacement cap screws.

WOT No 01142671 06

ENERGY NORTHWEST
People · Vision · Solutions

FORM NIS-2 OWNER'S REPORT FOR REPAIR/REPLACEMENT ACTIVITY (Back)

8 Tests Conducted: Hydrostatic [ ] **Pneumatic** [ ] **Nominal Operating Pressure** [ ] **Other** [ ]
Exempt [ ] **Test Pressure:** 1020 Psig **Test Temperature:** 165° F

9. Remarks (Applicable Manufacturer's Data Reports to be attached): 1) See attached N-2 Code Data Report for the replacement CRD assembly, Serial No 7376. 2) * Pressure test on the CRD bolted flanged connection - Test pressure of 1020 Psig and test temperature of 165° F recorded during ASME Section XI pressure test in accordance with PPM No OSP-RPV-R801 "Reactor Pressure Vessel Leakage Test".

CERTIFICATE OF COMPLIANCE

I certify that the statements made in this Owner's Report are correct and that this conforms to the requirements of the ASME Code, Section XI.
Type Code Symbol Stamp: Not Applicable
Certificate Of Authorization No.: Not Applicable
Expiration Date: Not Applicable

Prepared By Kuldip Singh - Program Lead Engineer (PLE) ***Signed By*** Kuldip Singh - Program Lead Engineer (PLE)

Date 6/26/09 ***Date*** 6/26/09

CERTIFICATE OF INSERVICE INSPECTION

I, the undersigned, holding a valid commission issued by the National Board of Boiler and Pressure Vessel Inspectors and the State of Washington ***and employed by*** Hartford Steam Boiler Of Connecticut of Hartford, Connecticut ***have inspected the components described in this Owner's Report during the period*** 4/1/2009 ***to*** 6/29/2009 ***and state to the best of my knowledge and belief, the Owner has performed examinations and taken corrective measures described in this Owner's Report in accordance with the requirements of the ASME Code, Section XI.***
By signing this certificate neither the Inspector nor his employer makes any warranty, expressed or implied, concerning the examinations and corrective measures described in this Owner's Report. Furthermore, neither the Inspector nor his employer shall be liable in any manner for any personal injury or property damage or a loss of any kind arising from or connected with this inspection.

Inspector's Signature ***Commissions*** 13172 WANI
National Board, State, and Endorsements

Date 6/29/2009

W01 No. 01142671 06

FORM N-2 MANUFACTURERS DATA REPORT FOR NUCLEAR PART AND APPURTENANCES

As required by the Provisions of the ASME Code Rules

1. (a) Manufactured by General Electric Company, Castle Hayne Rd., Wilmington, N. C. 6/26/08.
(Name and address of Manufacturer of part)

(b) Manufactured for General Electric Company, San Jose, California
(Name and address of Manufacturer of completed nuclear component)

2. Identification-Manufacturer's Serial No. of Part 7376 Nat'l Bd. No.

(a) Constructed According to Drawing No. 761E387G2 Drawing Prepared by D. L. Peterson

(b) Description of Part Inspected Control Rod Drive, Model #7RDB144 C1

(c) Applicable ASME Code: Section III, Edition 1971, Addenda date None, Case No. 1361-1 Class 1

3. Remarks: Standard part for use with Reactor. Hydrostatically tested at 1820 psi minimum.
(Brief description of service for which component was designed)

We certify that the statements made in this report are correct and this vessel part or appurtenance as defined in the Code conforms to the rules of construction of the ASME Code Section III.
(The applicable Design Specification and Stress Report are not the responsibility of the part Manufacturer. An appurtenance Manufacturer is responsible for furnishing a separate Design Specification and Stress Report if the appurtenance is not included in the component Design Specification and Stress Report.)

Date July 31 1975 Signed GE, BWRSD - REM (Manufacturer) By

Certificate of Authorization Expires June 20, 1978 Certificate of Authorization No. NPT - 462

CERTIFICATION OF DESIGN FOR APPURTENANCE (when applicable)

Design information on file at General Electric Co., BWRSD-REM, Castle Hayne Rd., Wilmington

Stress analysis report on file at General Electric Co., BWRSD-REM, Castle Hayne Rd., Wilmington

Design specifications certified by Vernon W. Pence Prof. Eng. State Calif. Reg. No. 14488

Stress analysis report certified by Vernon W. Pence Prof. Eng. State Calif. Reg. No. 14488

CERTIFICATE OF SHOP INSPECTION

I, the undersigned, holding a valid commission issued by the National Board of Boiler and Pressure Vessel Inspectors and/or the State or Province of North Carolina and employed by Department of Labor of State of North Carolina have inspected the part of a pressure vessel described in this Manufacturer's Partial Data Report on July 31 1975, and state that to the best of my knowledge and belief, the Manufacturer has constructed this part in accordance with the ASME Code Section III.

By signing this certificate, neither the Inspector nor his employer makes any warranty, expressed or implied, concerning the part described in this Manufacturer's Partial Data Report. Furthermore, neither the Inspector nor his employer shall be liable in any manner for any personal injury or property damage or a loss of any kind arising from or connected with this Inspection.

Date July 31 1975

E. R. Sherrill
Inspector's Signature

Commissions NC 723, PA. NC 1766, Ohio
National Board, State, Province and No.

FORM N-2 (back)

761E387G2
7376

Items 4–8 incl. to be completed for single wall vessels, jackets of jacketed vessels, or shells of heat exchangers.

4. Shell: Material ____ (Kind & Spec. No.) ____ T.S. ____ (Min. of Range Specified) Nominal Thickness ____ in. Corrosion Allowance ____ in. Dia. ____ ft. ____ in. Length ____ ft. ____ in.

5. Seams: Long ____ H.T.[1] ____ R.T. ____ Efficiency ____ %

Girth ____ H.T.[1] ____ R.T. ____ No. of Courses ____

6. Heads: (a) Material ____ T.S. ____ (b) Material ____ T.S. ____

Location (Top, bottom, ends)	Thickness	Crown Radius	Knuckle Radius	Elliptical Ratio	Conical Apex Angle	Hemispherical Radius	Flat Diameter	Side to Press. (Conv. or Conc.)
(a)								
(b)								

If removable, bolts used ____ (Material, Spec. No., T.S., Size, Number) Other fastening ____ (Describe or attach sketch)

7. Jacket Closure: ____ (Describe as ogee and weld, bar, etc. If bar give dimensions, if bolted, describe or sketch)

8. Design pressure[2] 1250 psi at 575 °F Drop Weight ____ Charpy Impact ____ ft-lb at temp. of ____ °F

FOR [illegible] ONLY

Items 9 and 10 to be completed for tube sections

9. Tube Sheets: Stationary, Material ____ (Kind & Spec. No.) Dia. ____ (Subject to pressure) Thickness ____ in. Attachment ____ (Welded, Bolted)

Floating. Material ____ Dia. ____ Thickness ____ in. Attachment ____

10. Tubes: Material ____ O.D. ____ in. Thickness ____ inches or gage. Number ____ Type ____ (Str. or U)

Items 11–14 incl. to be completed for inner chambers of jacketed vessels, or channels of heat exchangers.

11. Shell: Material ____ (Kind & Spec. No.) T.S. ____ (Min. of Range Specified) Nominal Thickness ____ in. Corrosion Allowance ____ in. Dia. ____ ft. ____ in. Length ____ ft. ____ in.

12. Seams: Long ____ H.T.[1] ____ R.T. ____ Efficiency ____ %

Girth ____ H.T.[1] ____ R.T. ____ No. of Courses ____

13. Heads (a) Material ____ T.S. ____ (b) Material ____ T.S. ____

Location	Thickness	Crown Radius	Knuckle Radius	Elliptical Ratio	Conical Apex Angle	Hemispherical Radius	Flat Diameter	Side to Press. (Conv. or Conc.)
(a) Top, bottom, ends								
(b) Channel								

If removable, bolts used (a) ____ (b) ____ (c) ____ Other fastening ____ (Describe or attach sketch)

14. Design pressure[2] ____ psi at ____ °F Drop Weight ____ Charpy Impact ____ ft-lb at temp. of ____ °F

Items below to be completed for all vessels where applicable.

15. Safety Valve Outlets: Number ____ Size ____ Location ____

16. Nozzles:

Purpose (Inlet, Outlet, Drain)	Number	Dia. or Size	Type	Material	Thickness	Reinforcement Material	How Attached

17. Inspection Openings: Manholes, No. ____ Size ____ Location ____
Handholes, No. ____ Size ____ Location ____
Threaded, No. ____ Size ____ Location ____

18. Supports: Skirt ____ (Yes or No) Lugs ____ (Number) Legs ____ (Number) Other ____ (Describe) Attached ____ (Where & How)

7X0036768O

WOT No 01142671 08

ENERGY NORTHWEST
People · Vision · Solutions

FORM NIS-2 OWNER'S REPORT FOR REPAIR/REPLACEMENT ACTIVITY
As Required By The Provisions Of The ASME Code Section XI

Date: 06/15/2009
Sheet: 1 Of 1
Unit: Not Applicable

1. Owner: Energy Northwest
Address: Columbia Generating Station, North Power Plant Loop, Richland, Washington, 99352
2. Plant: Columbia Generating Station
Address: Columbia Generating Station, North Power Plant Loop, Richland, Washington, 99352
3. (a) Work Performed By: Energy Northwest
(b) Repair/Replacement Organization P.O. No, Job No, etc.: Energy Northwest
(c) Type Code Symbol Stamp: Not Applicable
(d) Certificate Of Authorization No.: Not Applicable
(e) Expiration Date: Not Applicable
4. Identification Of System: Control Rod Drive (CRD) System
5. (a) Applicable Construction Code: ASME Section III, Code Class 1, 1974 Edition with Winter 1975 Addenda, Code Case: Note 1
(b) Applicable Edition Of ASME Section XI Used For Repair/Replacement Activity: 2001 Edition with 2003 Addenda
(c) Applicable ASME Section XI Case(s): None
6. Identification Of Components

Name Of Component	Name Of Manufacturer	Manufacturer's Serial No	National Board No	Other I.D.	Year Built	Corrected, Removed Or Installed	ASME Code Stamped (Yes Or No) Code Class
CRD	GE	A8658	N/A	N/A	1988	Removed	Yes, Code Class 1
CRD	GE	A8664	N/A	N/A	1988	Installed	Yes, Code Class 1

7. Description Of Work Performed: Replaced Control Rod Drive (CRD) assembly at Core Location 18-51. The replacement work was performed in accordance with plant procedure PPM No 10.5.7 "Control Rod Drive Removal And Replacement" as follows:

1) Removed all eight (8) existing cap screws from the CRD assembly bolted flanged connection.
2) Removed existing CRD assembly, Serial No A8658.
3) Performed VT-1 visual examination on all eight (8) new replacement cap screws. VT-1 visual examination results acceptable.
4) Installed replacement CRD assembly, Serial No A8664.
5) Installed eight (8) VT-1 visually examined new replacement cap screws for the CRD assembly bolted flanged connection.
6) Torqued the cap screws for the CRD assembly bolted flanged connection to the required torque values.
7) Performed VT-2 visual examination during pressure test on CRD assembly bolted flanged connection to confirm pressure boundary integrity of the joint. No leakage was observed during pressure test.

NOTES -

1) The applicable ASME Code Cases, if any are listed on the ASME Code Data Reports.
2) The replacement CRD assembly, Serial No A8664 is certified to comply with ASME Section III, Code Class 1, 1974 Edition with Winter 1975 Addenda requirements.
3) Eight (8) new replacement cap screws, SA-540 Gr. B23, Class 4, Heat No 56624, Heat (Trace) Code No OH50.
4) VT-1 visual examination Report No 3RPV-001 for the new replacement cap screws.

WOT No 01142671 08

ENERGY NORTHWEST
People · Vision · Solutions

FORM NIS-2 OWNER'S REPORT FOR REPAIR/REPLACEMENT ACTIVITY (Back)

8 Tests Conducted: Hydrostatic [ ] **Pneumatic** [ ] **Nominal Operating Pressure** [ ] **Other** [ ]
Exempt [ ] **Test Pressure:** 1020 Psig **Test Temperature:** 165° F

9. Remarks (Applicable Manufacturer's Data Reports to be attached): 1) See attached N-2 Code Data Report for the replacement CRD assembly, Serial No A8664. 2) * Pressure test on the CRD bolted flanged connection - Test pressure of 1020 Psig and test temperature of 165° F recorded during ASME Section XI pressure test in accordance with PPM No OSP-RPV-R801 "Reactor Pressure Vessel Leakage Test".

CERTIFICATE OF COMPLIANCE

I certify that the statements made in this Owner's Report are correct and that this conforms to the requirements of the ASME Code, Section XI.
Type Code Symbol Stamp: Not Applicable
Certificate Of Authorization No.: Not Applicable
Expiration Date: Not Applicable

Prepared By Kuldip Singh - Program Lead Engineer (PLE) ***Signed By*** Kuldip Singh - Program Lead Engineer (PLE)

Date 6/26/09 ***Date*** 6/26/09

CERTIFICATE OF INSERVICE INSPECTION

I, the undersigned, holding a valid commission issued by the National Board of Boiler and Pressure Vessel Inspectors and the State of Washington ***and employed by*** Hartford Steam Boiler Of Connecticut of Hartford, Connecticut ***have inspected the components described in this Owner's Report during the period*** 4/1/2009 ***to*** 6/29/2009 ***and state to the best of my knowledge and belief, the Owner has performed examinations and taken corrective measures described in this Owner's Report in accordance with the requirements of the ASME Code, Section XI.***
By signing this certificate neither the Inspector nor his employer makes any warranty, expressed or implied, concerning the examinations and corrective measures described in this Owner's Report. Furthermore, neither the Inspector nor his employer shall be liable in any manner for any personal injury or property damage or a loss of any kind arising from or connected with this inspection.

Inspector's Signature ***Commissions*** 13172 WANI
National Board, State, and Endorsements

Date 6/29/2009

WO1 No. 01142671 08

Philip Smith 6/26/09

FORM N-2 NPT CERTIFICATE HOLDERS' DATA REPORT FOR NUCLEAR PART AND APPURTENANCES*
As required by the Provision of the ASME Code Rules, Section III, Div. 1

1. (a) Manufactured & Certified by: GE Company, 2117 Castle Hayne Rd., Wilmington, N.C. 28402
(Name and Address of NPT Certificate Holder)

(b) Manufactured for: WNP-2, RICHLAND, Wa. 99352
(Name and Address of N Certificate Holder for completed nuclear component)

2. Identification-Certificate Holders's S/N of Part: A6664 Nat'l Bd. No. N/A

(a) Constructed According to Drawing No: 919D258G003 Dwg. Prepared by D. L. Peterson

(b) Description of Part Inspected: CYLINDER TUBE & FLANGE

(c) Applicable ASME Code: Section III, Edition 1974, Addenda Date W'75 Case No. 1361-2 Class 1

3. REMARKS: Sub-assembly of Control Rod Drive for use with reactor.
(Brief description of service for which component was designed)
Hydrostatically tested at 1825 psi. min.

*Sheet 1 of 2

We certify that the statements in this report are correct and this vessel part or appurtenance as defined in the code conforms to the rules of construction of the ASME Code Section III. (The applicable Designed Specification and Stress Report are not the responsibility of the NPT Certificate Holder for parts. An NPT Certification Holder for appurtenances is responsible for furnishing a separate Design Specification and Stress Report if the appurtenance is not included in the component Design Specification and Stress Report).

DATE: 5/27, 19 88 Signed GE-NEBG-NF&CM-QA By [signature]
(NPT Certificate Holder)

Certificate Of Authorization Expires: 6/16/90 Certification of Authorization No.: NPT N-1151

CERTIFICATION OF DESIGN FOR APPURTENANCE

Design information on file at GE COMPANY, SAN JOSE, CALIFORNIA

Stress analysis report on file at GE COMPANY, SAN JOSE, CALIFORNIA
DC22A6253 Rev. 0
Design specification certified by BJORN HAABERG Prof. Eng. State CALIF. Reg. No. 15570
DC22A6254 Rev. 0.
Stress analysis report certified by EDWARD YOSHIO Prof. Eng. State CALIF. Reg. No. M018646

CERTIFICATION OF SHOP INSPECTION

I, the undersigned, holding a valid commission by the National Board of Boiler and Pressure Inspectors and/or the State or Province of NORTH CAROLINA and employed by DEPARTMENT OF LABOR STATE OF NORTH CAROLINA have inspected the part of a pressure vessel described in this Partial Data Report on 5/27 19 88, and state that to the best of my knowledge and belief, the NPT Certificate Holder has constructed this part in accordance with the ASME Code Section III.

By signing this certificate, neither the Inspector nor his employer makes any warranty, expressed or implied, concerning the part described in the Partial Data Report. Furthermore, neither the Inspector nor his employer shall be liable in any manner for any personal injury or property damages or a loss of any kind arising from or connected with this inspection.

DATE 5/27, 19 88 [signature] N.C. 723, PA.WC1766, OHIO
Inspector's Signature National Board, State, Province and No.

Supplemental sheets in form of lists, sketches or drawing may be used provided (1) size is 8½" X 11", (2) information in 1-2 on this Data Report is included on each sheet, and (3) each sheet is numbered and number of sheets is recorded in Item 3. "REMARKS"

(77)

FORM N-2 (back)

Items 4-8 Incl. to be completed for single wall vessels, jackets vessels, or shells of heat exchangers.

4. Shell: Material_____ T.S._____ Nominal Thickness___in. Corrosion Allowance___in Dia.___ft.___in. Length___ft.___in.
(Kind & Spec.No) (Min.ofRange Specified)

5. Seams: Long_____ H.T.[1]_____ R.T._____ Efficiency_____%

Girth_____ H.T.[1]_____ R.T._____ No. of Courses_____

6. Heads: (a) Material_____ T.S._____ (b)Material_____ T.S._____

Location (Top Bottom, Ends)	Thickness	Crown Radius	Knuckle Radius	Elliptical Ratio	Concial Apex Angle	Hemispherical Radius	Flat Diameter	Side to Press. (conv.or conc.)
(a)_____	_____	_____	_____	_____	_____	_____	_____	_____
(b)_____	_____	_____	_____	_____	_____	_____	_____	_____

If removable, bolts used_____ Other fastening_____
(Material, Spec.No., T.S. Size Number) (Describe or attach sketch)

7. Jacket Closure:_____
(Describe as ogee and weld, bar, etc. If bar give dimensions, if bolts, describe or sketch)

8. Design Pressure [2] 1250 psi at 575 °F

Drop Weight_____
Charpy Impact_____ ft-lb
at temp. of_____ °f

Items 9 and 10 to be completed for tube sections.

9. Tube Sheets: Stationary Mat'l._____ Dia._____ Thickness___in. Attachment_____
(Kind of Spec. No.) (Subj.to Press.) (Welded, Bolted)

Floating. Material _____ Dia._____ Thickness___in. Attachment_____
inches

10. Tubes: Material_____ O.D.___in. Thickness_____ or gage. Number____ Type_____
(Str. or U)

Items 11-14 incl. to be completed for inner chambers of jacketed vessels, or channels of heat exchangers

11. Shell: Material____ T.S.____ Nominal Thickness___in. Corrosion Allowance___in. Dia.___ft.___in___Length___ft.___in.
(Kind&Spec.No.) (Min.ofRange Specified)

12. Seams: Long_____ H.T.[1]_____ R.T._____ Efficiency_____%
Girth_____ H.T.[1]_____ R.T._____ No. of Courses_____

13. Heads (a) Material_____ T.S._____ (b)Material_____ T.S._____

Location (a)Top, Bottom, End	Ticnkess	Crown Radius	Knucle Radius	Elliptical Ratio	Concial Apex Angle	Hemispherical Radius	Fat Diameter	Side to Press (Conv.or Conc.)
(b)Channel	_____	_____	_____	_____	_____	_____	_____	_____

If removable, bolts used (a)_____ (b)_____ (c)____ Other Fastening_____
(Describe or attach sketch

14. Design pressure[2]_____ psi at_____ °F

Drop Weight_____
Charpy Impact_____ ft-lb
at temp. of _____ °F

Items below to be completed for all vessels where applicable.

15. Safety Valve Outlets: Number_____ Size_____ Location_____

16. Nozzles:

Purpose (Inlet Outlet, Drain)	Number	Dia or Size	Type	Material	Thickness	Reinforcement Material	Attached
_____	_____	_____	_____	_____	_____	_____	_____
_____	_____	_____	_____	_____	_____	_____	_____

17. Inspection Openings: Manholes, No._____ Size_____ Location_____
Handles, No._____ Size_____ Location_____
Threaded, No._____ Size_____ Location_____

18. Supports: Shirt_____ Lugs_____ Legs_____ Other_____ Attached_____
(Yes or No) (Number) (Number) (Describe) (Where & How)

[1] If Postweld Heat-Treated.

[2] List other internal or external pressure with coincident temperature when applicable.

WOT No 01142671 09

ENERGY NORTHWEST
People · Vision · Solutions

FORM NIS-2 OWNER'S REPORT FOR REPAIR/REPLACEMENT ACTIVITY
As Required By The Provisions Of The ASME Code Section XI

Date: 06/15/2009
Sheet: 1 Of 1
Unit: Not Applicable

1. **Owner:** Energy Northwest
   Address: Columbia Generating Station, North Power Plant Loop, Richland, Washington, 99352
2. **Plant:** Columbia Generating Station
   Address: Columbia Generating Station, North Power Plant Loop, Richland, Washington, 99352
3. **(a) Work Performed By:** Energy Northwest
   (b) Repair/Replacement Organization P.O. No, Job No, etc.: Energy Northwest
   (c) Type Code Symbol Stamp: Not Applicable
   (d) Certificate Of Authorization No.: Not Applicable
   (e) Expiration Date: Not Applicable
4. **Identification Of System:** Control Rod Drive (CRD) System
5. **(a) Applicable Construction Code:** ASME Section III, Code Class 1, 1974 Edition with Winter 1975 Addenda, Code Case: Note 1
   (b) Applicable Edition Of ASME Section XI Used For Repair/Replacement Activity: 2001 Edition with 2003 Addenda
   (c) Applicable ASME Section XI Case(s): None
6. **Identification Of Components**

Name Of Component	Name Of Manufacturer	Manufacturer's Serial No	National Board No	Other I.D.	Year Built	Corrected, Removed Or Installed	ASME Code Stamped (Yes Or No) Code Class
CRD	GE	7232	N/A	N/A	1975	Removed	Yes, Code Class 1
CRD	GE	A8548	N/A	N/A	1987	Installed	Yes, Code Class 1

7. **Description Of Work Performed:** Replaced Control Rod Drive (CRD) assembly at Core Location 18-59. The replacement work was performed in accordance with plant procedure PPM No 10.5.7 "Control Rod Drive Removal And Replacement" as follows:

1) Removed all eight (8) existing cap screws from the CRD assembly bolted flanged connection.
2) Removed existing CRD assembly, Serial No 7232.
3) Performed VT-1 visual examination on all eight (8) new replacement cap screws. VT-1 visual examination results acceptable.
4) Installed replacement CRD assembly, Serial No A8548.
5) Installed eight (8) VT-1 visually examined new replacement cap screws for the CRD assembly bolted flanged connection.
6) Torqued the cap screws for the CRD assembly bolted flanged connection to the required torque values.
7) Performed VT-2 visual examination during pressure test on CRD assembly bolted flanged connection to confirm pressure boundary integrity of the joint. No leakage was observed during pressure test.

NOTES -

1) The applicable ASME Code Cases, if any are listed on the ASME Code Data Reports.
2) The replacement CRD assembly, Serial No A8548 is certified to comply with ASME Section III, Code Class 1, 1974 Edition with Winter 1975 Addenda requirements.
3) Eight (8) new replacement cap screws, SA-540 Gr. B23, Class 4, Heat No 56624, Heat (Trace) Code No OH50.
4) VT-1 visual examination Report No 3RPV-001 for the new replacement cap screws.

WOT No 01142671 09

ENERGY NORTHWEST
People · Vision · Solutions

FORM NIS-2 OWNER'S REPORT FOR REPAIR/REPLACEMENT ACTIVITY (Back)

8 Tests Conducted: Hydrostatic [ ] Pneumatic [ ] Nominal Operating Pressure [ ] Other [*]
Exempt [ ] Test Pressure: 1020 Psig Test Temperature: 165° F

9. Remarks (Applicable Manufacturer's Data Reports to be attached): 1) See attached N-2 Code Data Report for the replacement CRD assembly, Serial No A8548. 2) * Pressure test on the CRD bolted flanged connection - Test pressure of 1020 Psig and test temperature of 165° F recorded during ASME Section XI pressure test in accordance with PPM No OSP-RPV-R801 "Reactor Pressure Vessel Leakage Test".

CERTIFICATE OF COMPLIANCE

I certify that the statements made in this Owner's Report are correct and that this conforms to the requirements of the ASME Code, Section XI.
Type Code Symbol Stamp: Not Applicable
Certificate Of Authorization No.: Not Applicable
Expiration Date: Not Applicable

Prepared By Kuldip Singh - Program Lead Engineer (PLE) **Signed By** Kuldip Singh - Program Lead Engineer (PLE)

Date 6/26/09 **Date** 6/26/09.

CERTIFICATE OF INSERVICE INSPECTION

I, the undersigned, holding a valid commission issued by the National Board of Boiler and Pressure Vessel Inspectors and the State of Washington *and employed by* Hartford Steam Boiler Of Connecticut of Hartford, Connecticut *have inspected the components described in this Owner's Report during the period* 4/1/2009 *to* 6/29/2009 *and state to the best of my knowledge and belief, the Owner has performed examinations and taken corrective measures described in this Owner's Report in accordance with the requirements of the ASME Code, Section XI.*
By signing this certificate neither the Inspector nor his employer makes any warranty, expressed or implied, concerning the examinations and corrective measures described in this Owner's Report. Furthermore, neither the Inspector nor his employer shall be liable in any manner for any personal injury or property damage or a loss of any kind arising from or connected with this inspection.

Inspector's Signature **Commissions** 13172 WANI
National Board, State, and Endorsements

Date 6/29/2009

WOT No. 0114267109.

... Revision of the ASME Code Rules, Section III, Div. 1

1. Manufactured & Certified by: GE Company, 2117 Castle Hayne Rd., Wilmington, N.C. 28402
(Name and Address of NPT Certificate Holder)

(b) Manufactured for: WNP-2
(Name and Address of N Certificate Holder for completed nuclear compone

2. Identification-Certificate Holders's S/N of Part: AB548 Nat'l Bd. No. N/A

(a) Constructed According to Drawing No: 919D258G003 Dwg. Prepared by D. L. Peters

(b) Description of Part Inspected: CYLINDER TUBE & FLANGE

(c) Applicable ASME Code: Section III, Edition 1974, Addenda Date W'75, Case No. 1361-2 Clas

3. REMARKS: Sub-assembly of Control Rod Drive for use with reactor.
(Brief description of service for which component was designed)
Hydrostatically tested at 1825 psi. min.

*Sheet 1 of 2

We certify that the statements in this report are correct and this vessel part or appurtena as defined in the code conforms to the rules of construction of the ASME Code Section I (The applicable Designed Specification and Stress Report are not the responsibility of the Certificate Holder for parts. An NPT Certification Holder for appurtenances is responsib for furnishing a separate Design Specification and Stress Report if the appurtenance is included in the component Design Specification and Stress Report).

DATE: 11/10, 19 87 Signed GE-NEBG-NF&CM-QA By
(NPT Certificate Holder)

Certificate Of Authorization Expires: 6/16/90 Certification of Authorization No.: NPT N-1

CERTIFICATION OF DESIGN FOR APPURTENANCE

Design information on file at GE COMPANY, SAN JOSE, CALIFORNIA

ess analysis report on file at GE COMPANY, SAN JOSE, CALIFORNIA
DC22A6253 Rev. 0
Design specification certified by BJORN HAABERG Prof. Eng. State CALIF. Reg. No. 1557
DC22A6254 Rev. 0.
Stress analysis report certified by EDWARD YOSHIO Prof. Eng. State CALIF. Reg. No. M018

CERTIFICATION OF SHOP INSPECTION

I, the undersigned, holding a valid commission by the National Board of Boiler and Pressu Inspectors and/or the State or Province of NORTH CAROLINA and employed by DEPARTMENT OF LAB of STATE OF NORTH CAROLINA have inspected the part of a pressure vessel described in th Partial Data Report on 11-10 1987, and state that to the best of my knowled and belief, the NPT Certificate Holder has constructed this part in accordance with the AS Code Section III.

By signing this certificate, neither the Inspector nor his employer makes any warrant expressed or implied, concerning the part described in the Partial Data Report. Furthermor neither the Inspector nor his employer shall be liable in any manner for any personal injur or property damages or a loss of any kind arising from or connected with this inspection.

11-10, 1987 — NC. 779. PA. WC 2260 OHIO

DATE — Inspector's Signature — National Board, State, Province and

*Supplemental sheets in form of lists, sketches or drawing may be used provided (1) size is 8-1/2" X 11", (2) information in 1-2 on this Data Report is included on each sheet, and (3 each sheet is numbered and number of sheets is recorded in Item 3. "REMARKS"

10/..)

Items 4-8 Incl. to be completed for single wall vessels, jackets vessels, or shells of heat exchangers.

4. Shell: Material_____ T.S._____ Nominal Thickness___in. Corrosion Allowance___in Dia.___ft.___in. Length___ft.___in.
(Kind & Spec.No) (Min.ofRange Specified)

5. Seams: Long_____ H.T.[1]_____ R.T._____ Efficiency_____%

Girth_____ H.T.[1]_____ R.T._____ No. of Courses_____

S/N 8548

6. Heads: (a) Material_____ T.S._____ (b)Material_____ T.S._____

Kulak 1/15/88

Location (Top Bottom,Ends)	Thickness	Crown Radius	Knuckle Radius	Elliptical Ratio	Concial Apex Angle	Hemispherical Radius	Flat Diameter	Side to Press (conv.or conc
(a)_____	_____	_____	_____	_____	_____	_____	_____	_____
(b)_____	_____	_____	_____	_____	_____	_____	_____	_____

If removable, bolts used_____ Other fastening_____
(Material,Spec.No., T.S. Size Number) (Describe or attach sketch)

7. Jacket Closure:_____
(Describe as ogee and weld,bar,etc. If bar give dimensions, if bolts, describe or shet

8. Design Pressure [2] 1250 psi at 575 °F
Drop Weight_____
Charpy Impact_____ ft-lb
at temp. of_____ °f

Items 9 and 10 to be completed for tube sections.

9. Tube Sheets: Stationary Mat'l._____ Dia._____ Thickness__in. Attachment_____
(Kind of Spec. No.) (Subj.to Press.) (Welded, Bolted
Floating. Material _____ Dia._____ Thickness___in. Attachment_____

10. Tubes: Material_____ O.D.____in. Thickness_____ inches or gage. Number____ Type_____
(Str. or U)

Items 11-14 incl. to be completed for inner chambers of jacketed vessels, or channels of heat exchangers

11. Shell: Material____ T.S.____ Nominal Thickness___in. Corrosion Allowance___in. Dia.___ft.___in___Length___ft.___in.
(Kind&Spec.No.) (Min.ofRange Specified)

12. Seams: Long_____ H.T.[1]_____ R.T._____ Efficiency_____%
Girth_____ H.T.[1]_____ R.T._____ No. of Courses_____

13. Heads (a) Material_____ T.S._____ (b)Material_____ T.S._____

Location	Ticnkess	Crown Radius	Knucle Radius	Elliptical Ratio	Concial Apex Angle	Hemispherical Radius	Fat Diameter	Side to Pre (Conv.or Con
(a)Top, Bottom, End	_____	_____	_____	_____	_____	_____	_____	_____
(b)Channel	_____	_____	_____	_____	_____	_____	_____	_____

If removable, bolts used (a)_____ (b)_____ (c)_____ Other Fastening_____
(Describe or attach sketch

14. Design pressure[2]_____ psi at_____ °F
Drop Weight_____
Charpy Impact_____ ft-l
at temp. of _____ °F

Items below to be completed for all vessels where applicable.

15. Safety Valve Outlets: Number_____ Size_____ Location_____

16. Nozzles:

Purpose (Inlet Outlet, Drain)	Number	Dia or Size	Type	Material	Thickness	Reinforcement Material	Attach
_____	_____	_____	_____	_____	_____	_____	_____
_____	_____	_____	_____	_____	_____	_____	_____

17. Inspection Openings: Manholes, No._____ Size_____ Location_____
Handles, No._____ Size_____ Location_____
Threaded, No._____ Size_____ Location_____

18. Supports: Shirt_____ Lugs_____ Legs_____ Other_____ Attached_____
(Yes or No) (Number) (Number) (Describe) (Where & How)

[1] If Postweld Heat-Treated.

[2] List other internal or external pressure with conincident temperature when applicalbe.

WOT No 01142671 10

ENERGY NORTHWEST
People · Vision · Solutions

FORM NIS-2 OWNER'S REPORT FOR REPAIR/REPLACEMENT ACTIVITY
As Required By The Provisions Of The ASME Code Section XI

1. Owner: Energy Northwest
Address: Columbia Generating Station, North Power Plant Loop, Richland, Washington, 99352
2. Plant: Columbia Generating Station
Address: Columbia Generating Station, North Power Plant Loop, Richland, Washington, 99352

Date: 06/15/2009
Sheet: 1 Of 1
Unit: Not Applicable

3. (a) Work Performed By: Energy Northwest
(b) Repair/Replacement Organization P.O. No, Job No, etc.: Energy Northwest
(c) Type Code Symbol Stamp: Not Applicable
(d) Certificate Of Authorization No.: Not Applicable
(e) Expiration Date: Not Applicable
4. Identification Of System: Control Rod Drive (CRD) System
5. (a) Applicable Construction Code: ASME Section III, Code Class 1, 1974 Edition with Winter 1975 Addenda, Code Case: Note 1
(b) Applicable Edition Of ASME Section XI Used For Repair/Replacement Activity: 2001 Edition with 2003 Addenda
(c) Applicable ASME Section XI Case(s): None
6. Identification Of Components

Name Of Component	Name Of Manufacturer	Manufacturer's Serial No	National Board No	Other I.D.	Year Built	Corrected, Removed Or Installed	ASME Code Stamped (Yes Or No) Code Class
CRD	GE	A9126	N/A	N/A	1991	Removed	Yes, Code Class 1
CRD	GE	A9296	N/A	N/A	1996	Installed	Yes, Code Class 1

7. Description Of Work Performed: Replaced Control Rod Drive (CRD) assembly at Core Location 22-39. The replacement work was performed in accordance with plant procedure PPM No 10.5.7 "Control Rod Drive Removal And Replacement" as follows:

1) Removed all eight (8) existing cap screws from the CRD assembly bolted flanged connection.
2) Removed existing CRD assembly, Serial No A9126.
3) Performed VT-1 visual examination on all eight (8) new replacement cap screws. VT-1 visual examination results acceptable.
4) Installed replacement CRD assembly, Serial No A9296.
5) Installed eight (8) VT-1 visually examined new replacement cap screws for the CRD assembly bolted flanged connection.
6) Torqued the cap screws for the CRD assembly bolted flanged connection to the required torque values.
7) Performed VT-2 visual examination during pressure test on CRD assembly bolted flanged connection to confirm pressure boundary integrity of the joint. No leakage was observed during pressure test.

NOTES

1) The applicable ASME Code Cases, if any are listed on the ASME Code Data Reports.
2) The replacement CRD assembly, Serial No A9296 is certified to comply with ASME Section III, Code Class 1, 1974 Edition with Winter 1975 Addenda requirements.
3) Eight (8) new replacement cap screws, SA-540 Gr. B23, Class 4, Heat No 56624, Heat (Trace) Code No OH50.
4) VT-1 visual examination Report No 3RPV-001 for the new replacement cap screws.

WOT No 01142671 10

ENERGY NORTHWEST
People·Vision·Solutions

FORM NIS-2 OWNER'S REPORT FOR REPAIR/REPLACEMENT ACTIVITY (Back)

8 Tests Conducted: Hydrostatic [ ] Pneumatic [ ] Nominal Operating Pressure [ ] Other [ ]
Exempt [ ] **Test Pressure:** 1020 Psig **Test Temperature:** 165° F

9. Remarks (Applicable Manufacturer's Data Reports to be attached): 1) See attached N-2 Code Data Report for the replacement CRD assembly, Serial No A9296. 2) * Pressure test on the CRD bolted flanged connection - Test pressure of 1020 Psig and test temperature of 165° F recorded during ASME Section XI pressure test in accordance with PPM No OSP-RPV-R801 "Reactor Pressure Vessel Leakage Test".

CERTIFICATE OF COMPLIANCE

I certify that the statements made in this Owner's Report are correct and that this conforms to the requirements of the ASME Code, Section XI.
Type Code Symbol Stamp: Not Applicable
Certificate Of Authorization No.: Not Applicable
Expiration Date: Not Applicable

Prepared By Kuldip Singh - Program Lead Engineer (PLE) **Signed By** Kuldip Singh - Program Lead Engineer (PLE)

Date 6/26/09 **Date** 6/26/09.

CERTIFICATE OF INSERVICE INSPECTION

I, the undersigned, holding a valid commission issued by the National Board of Boiler and Pressure Vessel Inspectors and the State of Washington *and employed by* Hartford Steam Boiler Of Connecticut of Hartford, Connecticut *have inspected the components described in this Owner's Report during the period* 4/1/2009 *to* 6/29/2009 *and state to the best of my knowledge and belief, the Owner has performed examinations and taken corrective measures described in this Owner's Report in accordance with the requirements of the ASME Code, Section XI.*
By signing this certificate neither the Inspector nor his employer makes any warranty, expressed or implied, concerning the examinations and corrective measures described in this Owner's Report. Furthermore, neither the Inspector nor his employer shall be liable in any manner for any personal injury or property damage or a loss of any kind arising from or connected with this inspection.

Inspector's Signature **Commissions** 13172 WAN1
National Board, State, and Endorsements

Date 6/29/2009

W07 No. 01142671 10

FORM N-2 NPT CERTIFICATE HOLDERS' DATA REPORT FOR NUCLEAR PART AND APPURTENANCES*
As required by the Provision of the ASME Code Rules, Section III, Div. I

1. Manufactured & Certified by : General Electric Company Nuclear Energy (GE-NE)
3901 Castle Hayne Road, Wilmington, North Carolina 28401
(Name and Address of NPT Certificate Holder)

(b) Manufactured for : WNP 2 Richland, Washington 99352
(Name and Address of N Certificate Holder for completed nuclear component)

2. Identification - Certificate Holder's S/N of Part : A9296 Nat'l Bd. No. N/A

(a) Constructed According to Drawing No: 919D258G003 Rev 18 Dwg. Prepared by D. L. Peterson

(b) Description of Part Inspected: Cylinder Tube & Flange

(c) Applicable ASME Code: Section III , Edition 1974 , Addenda Date W'75 , Case No. 1361-2 Class 1

3. REMARKS: Standard part for use with Reactor. Hydrostatically tested at 1825 psi. min.
(Brief description of service for which component was designed)

Sheet 1 of 2

We certify that the statements in this report are correct and this vessel part or appurtenance as defined in the code conforms to the rules of construction of the ASME Code Section III. (The applicable Designed Specification and Stress Report are not the responsibility of the NPT Certificate Holder for parts. An NPT Certification Holder for appurtenances is responsible for furnishing a separate Design Specification and Stress Report if the appurtenance is not included in the component Design Specification and Stress Report).

Date: 03/28/96 Signed GE-NE (NPT Certificate Holder) By C S Bazzett (SC QA Representive)

Certificate of Authorization Expires: 6/16/96 Certification of Authorization No. : NPT N - 1151

Certification of Design for Appurtenance

Design information on file at GE Company, San Jose, California

Stress analysis report on file at GE Company, San Jose, California

DC22A6253 Rev. 2
Design specification certified by B.N. Sridhar Prof. Eng. State Calif. Reg. No. 18345

DC22A6254 Rev 1
Stress analysis report certified by Edward Yoshio Prof. Eng. State Calif. Reg. No. M018646

Certification of Shop Inspection

I, the undersigned, holding a valid commission by the National Board of Boiler and Pressure Inspectors and/or the State or Province of North Carolina and employed by Department of Labor of State of North Carolina have inspected the part of a pressure vessel described in this Partial Data Report on 3-29 , 96 , and state that to the best of my knowledge and belief, the NPT Certificate Holder has constructed this part in accordance with the ASME Code Section III.
By signing this certificate, neither the Inspector nor his employer makes any warranty, expressed or implied, concerning the part described in the Partial Data Report. Furthermore, neither the Inspector nor his employer shall be liable in any manner for any personal injury or property damages or a loss of any kind arising from or connected with this inspection.

3-29 , 96 Thomas Fuson NC 856
Date Inspector's Signature National Board, State, Province And No.

Supplemental sheets in form of lists, sketches or drawing may be used provided (1) size is 8-1/2" x 11", (2) information in 1-2 on this Data Report is included on each sheet, and (3) each sheet is numbered and number of sheets is recorded in Item 3. "REMARKS".

(07/90)

FORM N-2 (back)

Items 4-8 Incl. to be completed for single wall vessels, jackets vessels, or shells of heat exchangers.

4. Shell: Material _____ T.S. _____ Nominal Thickness ___ in. Corrosion Allowance ___ in. Dia. ___ ft. ___ in. Length ___ ft. ___ in.
(Kind & Spec. No.) (Min. of Range Specified)

5. Seams: Long _____ H.T.[1] _____ R.T. _____ Efficiency _____%
Girth _____ H.T.[1] _____ R.T. _____ No. of Courses _____

6. Heads: (a) Material _____ T.S. _____ (b) Material _____ T.S. _____

	Location (Top Bottom, Ends)	Thickness	Crown Radius	Knuckle Radius	Elliptical Ratio	Concial Apex Angle	Hemispherical Radius	Flat Diameter	Side to Press. (conv. or conc.)
(a)									
(b)									

If removable, bolts used _____ (Material, Spec. No., T.S. Size Number) Other fastening _____ (Describe or attach sketch)

7. Jacket Closure: _____
(Describe as ogee and weld, bar, etc. If bar give dimensions, if bolts, describe or sketch)

Drop Weight _____
Charpy Impact _____ ft-lb

8. Design pressure[2] 1250 psi at 575 °F at temp of _____ °F

Items 9 and 10 to be completed for tube sections

9. Tube Sheets: Stationary. Material _____ (Kind & Spec. No.) Dia. _____ (Subject to pressure) Thickness ___ in. Attachment _____ (Welded, Bolted)
Floating. Material _____ Dia. _____ Thickness ___ in. Attachment _____

10. Tubes: Material _____ O.D. _____ in. Thickness _____ inches or gage. Number _____ Type _____ (Str. or U)

Items 11 - 14 incl. to be completed for inner chambers of jacketed vessels, or channels of heat exchangers.

11. Shell: Material _____ T.S. _____ Nominal Thickness ___ in. Corrosion Allowance ___ in. Dia. ___ ft. ___ in. Length ___ ft. ___ in.
(Kind & Spec. No.) (Min. of Range Specified)

12. Seams: Long _____ H.T.[1] _____ R.T. _____ Efficiency _____%
Girth _____ H.T.[1] _____ R.T. _____ No. of Courses _____

13. Heads: (a) Material _____ T.S. _____ (b) Material _____ T.S. _____

	Location	Thickness	Crown Radius	Knuckle Radius	Elliptical Ratio	Concial Apex Angle	Hemispherical Radius	Flat Diameter	Side to Press. (conv. or conc.)
(a)	Top, bottom, ends								
(b)	Channel								

If removable, bolts used (a)_____ (b)_____ (c)_____ Other fastening _____ (Describe or attach sketch)

Drop Weight _____
Charpy Impact _____ ft-lb

14. Design pressure[2] _____ psi at _____ °F at temp of _____ °F

Items below to be completed for all vessels where applicable.

15. Safety Valve Outlets: Number _____ Size _____ Location _____

16. Nozzles:

Purpose (Inlet, Outlet, Drain)	Number	Dia. or Size	Type	Material	Thickness	Reinforcement Material	How Attached

17. Inspection Openings: Manholes, No. _____ Size _____ Location _____
Handholes, No. _____ Size _____ Location _____
Threaded, No. _____ Size _____ Location _____

18. Supports: Skirt _____ (Yes or No) Lugs _____ (Number) Legs _____ (Number) Other _____ (Describe) Attached _____ (Where & How)

1 - If Postweld Heat-Treated.
2 - List other internal or external pressure with coincident temperature when applicable.

WOT NO. 01142671 10

FORM N-2 NPT CERTIFICA HOLDERS' DATA REPORT FOR NUCLE PART AND APPURTENANCES*
As required by the Provision of the ASME Code Rules, Section III, Div. I

1. Manufactured & Certified by : General Electric Company Nuclear Energy (GE-NE)
3901 Castle Hayne Road, Wilmington, North Carolina 28401
(Name and Address of NPT Certificate Holder)

Philip Simpson 6/26/09.

(b) Manufactured for : WNP 2 Richland, Washington 99352
(Name and Address of N Certificate Holder for completed nuclear component)

2. Identification - Certificate Holder's S/N of Part : A9296 Nat'l Bd. No. N/A

(a) Constructed According to Drawing No: 919D258G003 Rev 18 Dwg. Prepared by D. L. Peterson

(b) Description of Part Inspected: Cylinder Tube & Flange

(c) Applicable ASME Code: Section III , Edition 1974 , Addenda Date W'75 , Case No. 1361-2 Class 1

3. REMARKS: Standard part for use with Reactor. Hydrostatically tested at 1825 psi. min.
(Brief description of service for which component was designed)

1. Cap 166B9274P001
SA182 - F316
3/8" thick x 1 1/16" OD

2. Indicator Tube 167B4908P001
SA312 - TP316
3/4" sch 40 - seamless pipe
0.113" wall thickness
1.065" max. dia.

3. Plug 159A1176P001
SA182 - F304
1/4" thick x 0.812" OD

4. Flange 919D610P001 (719E474)
SA182 - F304
3.37" thick x 9 5/8" OD

5. Head 129B3539P005
SA182 - F304
7/8" thick x 2.875" dia.

6. Ring Flange 114B5122P002
SA182 - F304
1" thick x 5.0" OD x 1.75" ID

7. Cap Screw 117C4516P002
SA193 - B6
6 ea. 1/2" dia. on 4 1/8" bolt circle

8. Plug 175A7961P001
SA182 - F304
0.38" thick x 1.307" dia.

9. Nut 114B5460P001
XM - 19 SA479
1.30" thick x 2.62" dia.

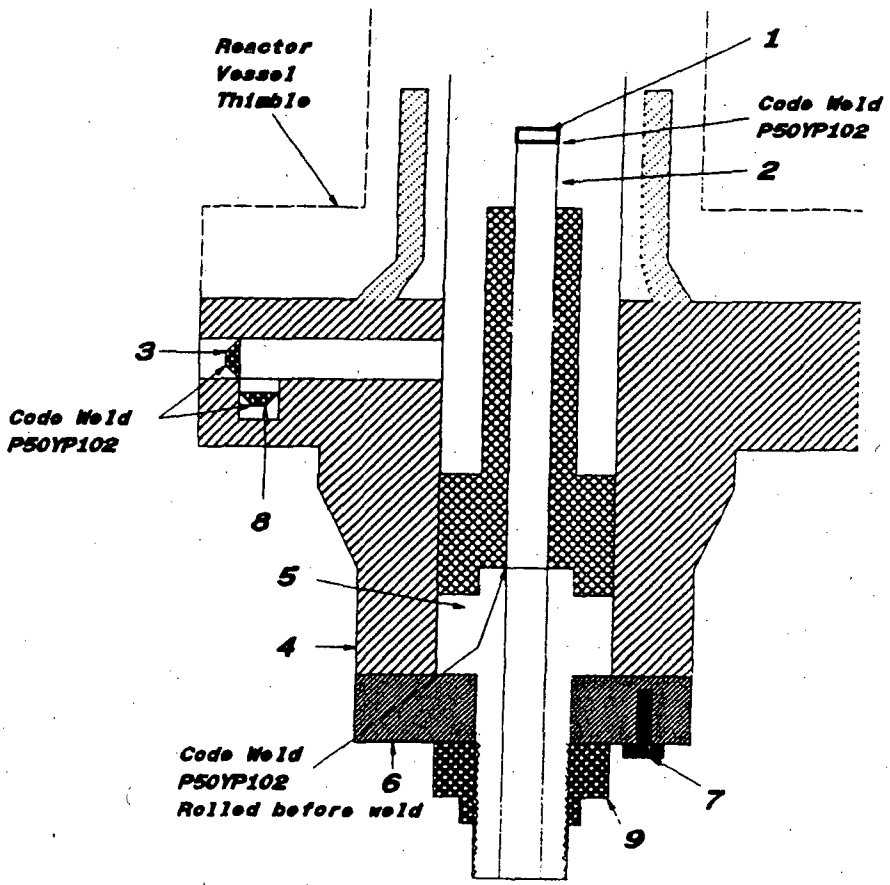

WOT No 01142671 11

ENERGY NORTHWEST
People · Vision · Solutions

FORM NIS-2 OWNER'S REPORT FOR REPAIR/REPLACEMENT ACTIVITY
As Required By The Provisions Of The ASME Code Section XI

Date: 06/15/2009
Sheet: 1 Of 1
Unit: Not Applicable

1. Owner: Energy Northwest
Address: Columbia Generating Station, North Power Plant Loop, Richland, Washington, 99352
2. Plant: Columbia Generating Station
Address: Columbia Generating Station, North Power Plant Loop, Richland, Washington, 99352
3. (a) Work Performed By: Energy Northwest
(b) Repair/Replacement Organization P.O. No, Job No, etc.: Energy Northwest
(c) Type Code Symbol Stamp: Not Applicable
(d) Certificate Of Authorization No.: Not Applicable
(e) Expiration Date: Not Applicable
4. Identification Of System: Control Rod Drive (CRD) System
5. (a) Applicable Construction Code: ASME Section III, Code Class 1, 1971 Edition with no Addenda, Code Case: Note 1
(b) Applicable Edition Of ASME Section XI Used For Repair/Replacement Activity: 2001 Edition with 2003 Addenda
(c) Applicable ASME Section XI Case(s): None
6. Identification Of Components

Name Of Component	Name Of Manufacturer	Manufacturer's Serial No	National Board No	Other I.D.	Year Built	Corrected, Removed Or Installed	ASME Code Stamped (Yes Or No) Code Class
CRD	GE	6370	N/A	N/A	1975	Removed	Yes, Code Class 1
CRD	GE	6396	N/A	N/A	1974	Installed	Yes, Code Class 1

7. Description Of Work Performed: Replaced Control Rod Drive (CRD) assembly at Core Location 22-43. The replacement work was performed in accordance with plant procedure PPM No 10.5.7 "Control Rod Drive Removal And Replacement" as follows:

1) Removed all eight (8) existing cap screws from the CRD assembly bolted flanged connection.
2) Removed existing CRD assembly, Serial No 6370.
3) Performed VT-1 visual examination on all eight (8) new replacement cap screws. VT-1 visual examination results acceptable.
4) Installed replacement CRD assembly, Serial No 6396.
5) Installed eight (8) VT-1 visually examined new replacement cap screws for the CRD assembly bolted flanged connection.
6) Torqued the cap screws for the CRD assembly bolted flanged connection to the required torque values.
7) Performed VT-2 visual examination during pressure test on CRD assembly bolted flanged connection to confirm pressure boundary integrity of the joint. No leakage was observed during pressure test.

NOTES

1) The applicable ASME Code Cases, if any are listed on the ASME Code Data Reports.
2) The replacement CRD assembly, Serial No 6396 is certified to comply with ASME Section III, Code Class 1, 1971 Edition with no Addenda requirements.
3) Eight (8) new replacement cap screws, SA-540 Gr. B23, Class 4, Heat No 56624, Heat (Trace) Code No OH50.
4) VT-1 visual examination Report No 3RPV-001 for the new replacement cap screws.

WOT No 01142671 11

ENERGY NORTHWEST
People · Vision · Solutions

FORM NIS-2 OWNER'S REPORT FOR REPAIR/REPLACEMENT ACTIVITY (Back)

8 Tests Conducted: Hydrostatic ☐ **Pneumatic** ☐ **Nominal Operating Pressure** ☐ **Other** ☐ *
Exempt ☐ **Test Pressure:** 1020 Psig **Test Temperature:** 165° F

9. Remarks (Applicable Manufacturer's Data Reports to be attached): 1) See attached N-2 Code Data Report for the replacement CRD assembly, Serial No 6396. 2) * Pressure test on the CRD bolted flanged connection - Test pressure of 1020 Psig and test temperature of 165° F recorded during ASME Section XI pressure test in accordance with PPM No OSP-RPV-R801 "Reactor Pressure Vessel Leakage Test".

CERTIFICATE OF COMPLIANCE

I certify that the statements made in this Owner's Report are correct and that this conforms to the requirements of the ASME Code, Section XI.
Type Code Symbol Stamp: Not Applicable
Certificate Of Authorization No.: Not Applicable
Expiration Date: Not Applicable

Prepared By Kuldip Singh - Program Lead Engineer (PLE) ***Signed By*** Kuldip Singh - Program Lead Engineer (PLE)

Date 6/26/09 ***Date*** 6/26/09

CERTIFICATE OF INSERVICE INSPECTION

I, the undersigned, holding a valid commission issued by the National Board of Boiler and Pressure Vessel Inspectors and the State of Washington ***and employed by*** Hartford Steam Boiler Of Connecticut of Hartford, Connecticut ***have inspected the components described in this Owner's Report during the period*** 4/1/2009 ***to*** 6/30/2009 ***and state to the best of my knowledge and belief, the Owner has performed examinations and taken corrective measures described in this Owner's Report in accordance with the requirements of the ASME Code, Section XI.***
By signing this certificate neither the Inspector nor his employer makes any warranty, expressed or implied, concerning the examinations and corrective measures described in this Owner's Report. Furthermore, neither the Inspector nor his employer shall be liable in any manner for any personal injury or property damage or a loss of any kind arising from or connected with this inspection.

Inspector's Signature ***Commissions*** 13172 WANI
National Board, State, and Endorsements

Date 6/30/2009

WOT No. 01142671 11

FORM N-2 MANUFACTURERS DATA REPORT FOR NUCLEAR PART AND APPURTENANCES

As required by the Provisions of the ASME Code Rules

1. (a) Manufactured by General Electric Company, Castle Hayne Rd., Wilmington, N. C. 6/26/09.
(Name and address of Manufacturer of part)

(b) Manufactured for General Electric Company, San Jose, California
(Name and address of Manufacturer of completed nuclear component)

2. Identification-Manufacturer's Serial No. of Part 6396 Nat'l Bd. No.

(a) Constructed According to Drawing No. 761E387G2 Drawing Prepared by D. L. Peterson

(b) Description of Part Inspected Control Rod Drive, Model #7RDB144 C1

(c) Applicable ASME Code: Section III, Edition 1971, Addenda date None, Case No. 1361-1 Class 1

3. Remarks: Standard part for use with Reactor. Hydrostatically tested at 1820 psi minimum.
(Brief description of service for which component was designed)

FOR INFORMATION ONLY

We certify that the statements made in this report are correct and this vessel part or appurtenance as defined in the Code conforms to the rules of construction of the ASME Code Section III.
(The applicable Design Specification and Stress Report are not the responsibility of the part Manufacturer. An appurtenance Manufacturer is responsible for furnishing a separate Design Specification and Stress Report if the appurtenance is not included in the component Design Specification and Stress Report.)

Date October 28 19 74 Signed GE, BWRSD - REM (Manufacturer) By

Certificate of Authorization Expires June 20, 1975 Certificate of Authorization No. NPT - 462

CERTIFICATION OF DESIGN FOR APPURTENANCE (when applicable)

Design information on file at General Electric Co., BWRSD-REM, Castle Hayne Rd., Wilmington

Stress analysis report on file at General Electric Co., BWRSD-REM, Castle Hayne Rd., Wilmington

Design specifications certified by Vernon W. Pence Prof. Eng. State Calif. Reg. No. 14488

Stress analysis report certified by Vernon W. Pence Prof. Eng. State Calif. Reg. No. 14488

CERTIFICATE OF SHOP INSPECTION

I, the undersigned, holding a valid commission issued by the National Board of Boiler and Pressure Vessel Inspectors and/or the State or Province of North Carolina and employed by Department of Labor of State of North Carolina have inspected the part of a pressure vessel described in this Manufacturer's Partial Data Report on October 28 19 74, and state that to the best of my knowledge and belief, the Manufacturer has constructed this part in accordance with the ASME Code Section III.

By signing this certificate, neither the Inspector nor his employer makes any warranty, expressed or implied, concerning the part described in this Manufacturer's Partial Data Report. Furthermore, neither the Inspector nor his employer shall be liable in any manner for any personal injury or property damage or a loss of any kind arising from or connected with this inspection.

Date October 28 19 74

Inspector's Signature Commissions NC 723, PA. NC 1766, Ohio
National Board, State, Province and No.

ZX00367168

761E387G002
6396

FORM N-2 (back)

Items 4–8 incl. to be completed for single wall vessels, jackets of jacketed vessels, or shells of heat exchangers.

4. Shell: Material ____ (Kind & Spec. No.) T.S. ____ (Min. of Range Specified) Nominal Thickness ____ in. Corrosion Allowance ____ in. Dia. ____ ft. ____ in. Length ____ ft. ____ in.

5. Seams: Long ____ H.T.[1] ____ R.T. ____ Efficiency ____ %

Girth ____ H.T.[1] ____ R.T. ____ No. of Courses ____

6. Heads: (a) Material ____ T.S. ____ (b) Material ____ T.S. ____

Location (Top, bottom, ends)	Thickness	Crown Radius	Knuckle Radius	Elliptical Ratio	Conical Apex Angle	Hemispherical Radius	Flat Diameter	Side to Press. (Conv. or Conc.)
(a)								
(b)								

If removable, bolts used ____ (Material, Spec. No., T.S., Size, Number) Other fastening ____ (Describe or attach sketch)

7. Jacket Closure: ____ (Describe as ogee and weld, bar, etc. If bar give dimensions, if bolted, describe or sketch)

8. Design pressure[2] 1250 psi at 575 °F

Drop Weight ____
Charpy Impact ____ ft-lb
at temp. of ____ °F

Items 9 and 10 to be completed for tube sections

FOR INFORMATION ONLY

9. Tube Sheets: Stationary. Material ____ (Kind & Spec. No.) Dia. ____ (Subject to pressure) Thickness ____ in. Attachment ____ (Welded, Bolted)

Floating. Material ____ Dia. ____ Thickness ____ in. Attachment ____

10. Tubes: Material ____ O.D. ____ in. Thickness ____ inches or gage. Number ____ Type ____ (Str. or U)

Items 11–14 incl. to be completed for inner chambers of jacketed vessels, or channels of heat exchangers.

11. Shell: Material ____ (Kind & Spec. No.) T.S. ____ (Min. of Range Specified) Nominal Thickness ____ in. Corrosion Allowance ____ in. Dia. ____ ft. ____ in. Length ____ ft. ____ in.

12. Seams: Long ____ H.T.[1] ____ R.T. ____ Efficiency ____ %

Girth ____ H.T.[1] ____ R.T. ____ No. of Courses ____

13. Heads (a) Material ____ T.S. ____ (b) Material ____ T.S. ____

Location	Thickness	Crown Radius	Knuckle Radius	Elliptical Ratio	Conical Apex Angle	Hemispherical Radius	Flat Diameter	Side to Press. (Conv. or Conc.)
(a) Top, bottom, ends								
(b) Channel								

If removable, bolts used (a) ____ (b) ____ (c) ____ Other fastening ____ (Describe or attach sketch)

14. Design pressure[2] ____ psi at ____ °F

Drop Weight ____
Charpy Impact ____ ft-lb
at temp. of ____ °F

Items below to be completed for all vessels where applicable.

15. Safety Valve Outlets: Number ____ Size ____ Location ____

16. Nozzles:

Purpose (Inlet, Outlet, Drain)	Number	Dia. or Size*	Type	Material	Thickness	Reinforcement Material	How Attached

17. Inspection Openings: Manholes, No. ____ Size ____ Location ____
Handholes, No. ____ Size ____ Location ____
Threaded, No. ____ Size ____ Location ____

7X00367169

18. Supports: Skirt ____ (Yes or No) Lugs ____ (Number) Legs ____ (Number) Other ____ (Describe) Attached ____ (Where & How)

WOT No 01142671 12

ENERGY NORTHWEST
People · Vision · Solutions

FORM NIS-2 OWNER'S REPORT FOR REPAIR/REPLACEMENT ACTIVITY
As Required By The Provisions Of The ASME Code Section XI

Date: 06/15/2009
Sheet: 1 Of 1
Unit: Not Applicable

1. Owner: Energy Northwest
Address: Columbia Generating Station, North Power Plant Loop, Richland, Washington, 99352
2. Plant: Columbia Generating Station
Address: Columbia Generating Station, North Power Plant Loop, Richland, Washington, 99352
3. (a) Work Performed By: Energy Northwest
(b) Repair/Replacement Organization P.O. No, Job No, etc.: Energy Northwest
(c) Type Code Symbol Stamp: Not Applicable
(d) Certificate Of Authorization No.: Not Applicable
(e) Expiration Date: Not Applicable
4. Identification Of System: Control Rod Drive (CRD) System
5. (a) Applicable Construction Code: ASME Section III, Code Class 1, 1974 Edition with Winter 1975 Addenda, Code Case: Note 1
(b) Applicable Edition Of ASME Section XI Used For Repair/Replacement Activity: 2001 Edition with 2003 Addenda
(c) Applicable ASME Section XI Case(s): None
6. Identification Of Components

Name Of Component	Name Of Manufacturer	Manufacturer's Serial No	National Board No	Other I.D.	Year Built	Corrected, Removed Or Installed	ASME Code Stamped (Yes Or No) Code Class
CRD	GE	A8913	N/A	N/A	1991	Removed	Yes, Code Class 1
CRD	GE	A8727	N/A	N/A	1989	Installed	Yes, Code Class 1

7. Description Of Work Performed: Replaced Control Rod Drive (CRD) assembly at Core Location 22-59. The replacement work was performed in accordance with plant procedure PPM No 10.5.7 "Control Rod Drive Removal And Replacement" as follows:

1) Removed all eight (8) existing cap screws from the CRD assembly bolted flanged connection.
2) Removed existing CRD assembly, Serial No A8913.
3) Performed VT-1 visual examination on all eight (8) new replacement cap screws. VT-1 visual examination results acceptable.
4) Installed replacement CRD assembly, Serial No A8727.
5) Installed eight (8) VT-1 visually examined new replacement cap screws for the CRD assembly bolted flanged connection.
6) Torqued the cap screws for the CRD assembly bolted flanged connection to the required torque values.
7) Performed VT-2 visual examination during pressure test on CRD assembly bolted flanged connection to confirm pressure boundary integrity of the joint. No leakage was observed during pressure test.

NOTES -

1) The applicable ASME Code Cases, if any are listed on the ASME Code Data Reports.
2) The replacement CRD assembly, Serial No A8727 is certified to comply with ASME Section III, Code Class 1, 1974 Edition with Winter 1975 Addenda requirements.
3) Eight (8) new replacement cap screws, SA-540 Gr. B23, Class 4, Heat No 56624, Heat (Trace) Code No OH50.
4) VT-1 visual examination Report No 3RPV-001 for the new replacement cap screws.

WOT No 01142671 12

ENERGY NORTHWEST
People·Vision·Solutions

FORM NIS-2 OWNER'S REPORT FOR REPAIR/REPLACEMENT ACTIVITY (Back)

8 Tests Conducted: Hydrostatic ☐ **Pneumatic** ☐ **Nominal Operating Pressure** ☐ **Other** ☒ *
Exempt ☐ **Test Pressure:** 1020 Psig **Test Temperature:** 165° F

9. Remarks (Applicable Manufacturer's Data Reports to be attached): 1) See attached N-2 Code Data Report for the replacement CRD assembly, Serial No A8727. 2) * Pressure test on the CRD bolted flanged connection - Test pressure of 1020 Psig and test temperature of 165° F recorded during ASME Section XI pressure test in accordance with PPM No OSP-RPV-R801 "Reactor Pressure Vessel Leakage Test".

CERTIFICATE OF COMPLIANCE

I certify that the statements made in this Owner's Report are correct and that this conforms to the requirements of the ASME Code, Section XI.
Type Code Symbol Stamp: Not Applicable
Certificate Of Authorization No.: Not Applicable
Expiration Date: Not Applicable

Prepared By Kuldip Singh - Program Lead Engineer (PLE) ***Signed By*** Kuldip Singh - Program Lead Engineer (PLE)

Date 6/26/09 ***Date*** 6/26/09.

CERTIFICATE OF INSERVICE INSPECTION

I, the undersigned, holding a valid commission issued by the National Board of Boiler and Pressure Vessel Inspectors and the State of Washington ***and employed by*** Hartford Steam Boiler Of Connecticut of Hartford, Connecticut ***have inspected the components described in this Owner's Report during the period*** 4/1/2009 ***to*** 6/30/2009 ***and state to the best of my knowledge and belief, the Owner has performed examinations and taken corrective measures described in this Owner's Report in accordance with the requirements of the ASME Code, Section XI.***
By signing this certificate neither the Inspector nor his employer makes any warranty, expressed or implied, concerning the examinations and corrective measures described in this Owner's Report. Furthermore, neither the Inspector nor his employer shall be liable in any manner for any personal injury or property damage or a loss of any kind arising from or connected with this inspection.

Inspector's Signature ***Commissions*** 13172 WANI
National Board, State, and Endorsements

Date 6/30/2009

WOT No. 01142671 12

Philip Sumpb

FORM N-2 NPT CERTIFICATE HOLDERS' DATA REPORT FOR NUCLEAR PART AND APPURTENANCES*

As required by the Provision of the ASME Code Rules, Section III, Div. 1

6/28/07

Manufactured & Certified by: GE Company, 2117 Castle Hayne Rd., Wilmington, N.C. 28402
(Name and Address of NPT Certificate Holder)

(b) Manufactured for: WNP-2, RICHLAND, Wa. 99352
(Name and Address of N Certificate Holder for completed nuclear component)

2. Identification-Certificate Holders's S/N of Part: A8727 Nat'l Bd. No. N/A

(a) Constructed According to Drawing No: 919D258G003 Dwg. Prepared by D. L. Peterson

(b) Description of Part Inspected: CYLINDER TUBE & FLANGE

(c) Applicable ASME Code: Section III, Edition 1974, Addenda Date W'75 Case No. 1361-2 Class 1

3. REMARKS: Sub-assembly of Control Rod Drive for use with reactor.
(Brief description of service for which component was designed)
Hydrostatically tested at 1825 psi. min.

*Sheet 1 of 2

We certify that the statements in this report are correct and this vessel part or appurtenance as defined in the code conforms to the rules of construction of the ASME Code Section III. (The applicable Designed Specification and Stress Report are not the responsibility of the NPT Certificate Holder for parts. An NPT Certification Holder for appurtenances is responsible for furnishing a separate Design Specification and Stress Report if the appurtenance is not included in the component Design Specification and Stress Report).

DATE: 2/1, 19 89 Signed GE-NEBG-NF&CM-QA By [signature]
(NPT Certificate Holder)

Certificate Of Authorization Expires: 6/16/90 Certification of Authorization No.: NPT N-1151

CERTIFICATION OF DESIGN FOR APPURTENANCE

Design information on file at GE COMPANY, SAN JOSE, CALIFORNIA

Stress analysis report on file at GE COMPANY, SAN JOSE, CALIFORNIA
DC22A6253 Rev. 0
Design specification certified by BJORN HAABERG Prof. Eng. State CALIF. Reg. No. 15570
DC22A6254 Rev. 0.
Stress analysis report certified by EDWARD YOSHIO Prof. Eng. State CALIF. Reg. No. M018646

CERTIFICATION OF SHOP INSPECTION

I, the undersigned, holding a valid commission by the National Board of Boiler and Pressure Inspectors and/or the State or Province of NORTH CAROLINA and employed by DEPARTMENT OF LABOR of STATE OF NORTH CAROLINA have inspected the part of a pressure vessel described in this Partial Data Report on 2/2 1989, and state that to the best of my knowledge and belief, the NPT Certificate Holder has constructed this part in accordance with the ASME Code Section III.

By signing this certificate, neither the Inspector nor his employer makes any warranty, expressed or implied, concerning the part described in the Partial Data Report. Furthermore, neither the Inspector nor his employer shall be liable in any manner for any personal injury or property damages or a loss of any kind arising from or connected with this inspection.

2/2, 1989 [signature] NC 779, PA, WC2160, OHIO

DATE Inspector's Signature National Board, State, Province and No.

*Supplemental sheets in form of lists, sketches or drawing may be used provided (1) size is 8-1/2" X 11", (2) information in 1-2 on this Data Report is included on each sheet, and (3) each sheet is numbered and number of sheets is recorded in Item 3. "REMARKSs"

(10/77)

VERIFIED & ACCEPTED [signature] 2-16-89
R.I. Inspector Date

FORM M-2 (back)

Items 4-8 Incl. to be completed for single wall vessels, jackets vessels, or shells of heat exchangers.

4. Shell: Material_____ T.S._____ Nominal Thickness___ in. Corrosion Allowance___ in Dia.___ ft.___ in. Length___ ft.___ in.
(Kind & Spec.No) (Min.ofRange Specified)

5. Seams: Long_____ H.T.[1]_____ R.T._____ Efficiency_____ %

Girth_____ H.T.[1]_____ R.T._____ No. of Courses_____

6. Heads: (a) Material_____ T.S._____ (b)Material_____ T.S._____

Location (Top Bottom,Ends)	Thickness	Crown Radius	Knuckle Radius	Elliptical Ratio	Concial Apex Angle	Hemispherical Radius	Flat Diameter	Side to Press. (conv.or conc.)
(a)								
(b)								

If removable, bolts used_____ Other fastening_____
(Material,Spec.No., T.S. Size Number) (Describe or attach sketch)

7. Jacket Closure:_____
(Describe as ogee and weld,bar,etc. If bar give dimensions, if bolts, describe or sketch)

8. Design Pressure [2] 1250 psi at 575 °F Drop Weight_____ Charpy Impact_____ ft-lb at temp. of_____ °f

Items 9 and 10 to be completed for tube sections.

9. Tube Sheets: Stationary Mat'l._____ Dia._____ Thickness___ in. Attachment_____
(Kind of Spec. No.) (Subj.to Press.) (Welded, Bolted)
Floating. Material _____ Dia._____ Thickness___ in. Attachment_____

10. Tubes: Material_____ O.D.____ in. Thickness____ inches or gage. Number____ Type_____
(Str. or U)

Items 11-14 incl. to be completed for inner chambers of jacketed vessels, or channels of heat exchangers

11. Shell: Material____ T.S.____ Nominal Thickness___ in. Corrosion Allowance___ in. Dia.___ ft.___ in___ Length___ ft.___ in.
(Kind&Spec.No.) (Min.ofRange Specified)

12. Seams: Long_____ H.T.[1]_____ R.T._____ Efficiency_____ %
Girth_____ H.T.[1]_____ R.T._____ No. of Courses_____

13. Heads (a) Material_____ T.S._____ (b)Material_____ T.S._____

Location	Ticnkess	Crown Radius	Knucle Radius	Elliptical Ratio	Concial Apex Angle	Hemispherical Radius	Fat Diameter	Side to Press (Conv.or Conc.)
(a)Top, Bottom, End								
(b)Channel								

If removable, bolts used (a)____ (b)____ (c)____ Other Fastening_____
(Describe or attach sketch

14. Design pressure[2]_____ psi at_____ °F Drop Weight_____, Charpy Impact_____ ft-lb at temp. of _____ °F

Items below to be completed for all vessels where applicable.

15. Safety Valve Outlets: Number_____ Size_____ Location_____

16. Nozzles:

Purpose (Inlet Outlet, Drain)	Number	Dia or Size	Type	Material	Thickness	Reinforcement Material	Attached

17. Inspection Openings: Manholes, No._____ Size_____ Location_____
Handles, No._____ Size_____ Location_____
Threaded, No._____ Size_____ Location_____

18. Supports: Shirt_____ Lugs_____ Legs_____ Other_____ Attached_____
(Yes or No) (Number) (Number) (Describe) (Where & How)

[1] If Postweld Heat-Treated.

[2] List other internal or external pressure with conincident temperature when applicalbe.

WOT No 01142671 13

ENERGY NORTHWEST
People · Vision · Solutions

FORM NIS-2 OWNER'S REPORT FOR REPAIR/REPLACEMENT ACTIVITY
As Required By The Provisions Of The ASME Code Section XI

Date: 06/26/2009
Sheet: 1 Of 1
Unit: Not Applicable

1. Owner: Energy Northwest
Address: Columbia Generating Station, North Power Plant Loop, Richland, Washington, 99352
2. Plant: Columbia Generating Station
Address: Columbia Generating Station, North Power Plant Loop, Richland, Washington, 99352
3. (a) Work Performed By: Energy Northwest
(b) Repair/Replacement Organization P.O. No, Job No, etc.: Energy Northwest
(c) Type Code Symbol Stamp: Not Applicable
(d) Certificate Of Authorization No.: Not Applicable
(e) Expiration Date: Not Applicable
4. Identification Of System: Control Rod Drive (CRD) System
5. (a) Applicable Construction Code: ASME Section III, Code Class 1, 1971 Edition with no Addenda, Code Case: Note 1
(b) Applicable Edition Of ASME Section XI Used For Repair/Replacement Activity: 2001 Edition with 2003 Addenda
(c) Applicable ASME Section XI Case(s): None
6. Identification Of Components

Name Of Component	Name Of Manufacturer	Manufacturer's Serial No	National Board No	Other I.D.	Year Built	Corrected, Removed Or Installed	ASME Code Stamped (Yes Or No) Code Class
CRD	GE	A9100	N/A	N/A	1992	Removed	Yes, Code Class 1
CRD	GE	7155	N/A	N/A	1975	Installed	Yes, Code Class 1

7. Description Of Work Performed: Replaced Control Rod Drive (CRD) assembly at Core Location 26-03. The replacement work was performed in accordance with plant procedure PPM No 10.5.7 "Control Rod Drive Removal And Replacement" as follows:

1) Removed all eight (8) existing cap screws from the CRD assembly bolted flanged connection.
2) Removed existing CRD assembly, Serial No A9100.
3) Performed VT-1 visual examination on all eight (8) new replacement cap screws. VT-1 visual examination results acceptable.
4) Installed replacement CRD assembly, Serial No 7155.
5) Installed eight (8) VT-1 visually examined new replacement cap screws for the CRD assembly bolted flanged connection.
6) Torqued the cap screws for the CRD assembly bolted flanged connection to the required torque values.
7) Performed VT-2 visual examination during pressure test on CRD assembly bolted flanged connection to confirm pressure boundary integrity of the joint. No leakage was observed during pressure test.

NOTES -

1) The applicable ASME Code Cases, if any are listed on the ASME Code Data Reports.
2) The replacement CRD assembly, Serial No 7155 is certified to comply with ASME Section III, Code Class 1, 1971 Edition with no Addenda requirements.
3) Eight (8) new replacement cap screws, SA-540 Gr. B23, Class 4, Heat No 56624, Heat (Trace) Code No OH50.
4) VT-1 visual examination Report No 3RPV-001 for the new replacement cap screws.

WOT No 01142671 13

ENERGY NORTHWEST
People · Vision · Solutions

FORM NIS-2 OWNER'S REPORT FOR REPAIR/REPLACEMENT ACTIVITY (Back)

8 Tests Conducted: Hydrostatic [ ] **Pneumatic** [ ] **Nominal Operating Pressure** [ ] **Other** [*]
Exempt [ ] **Test Pressure:** 1020 Psig **Test Temperature:** 165° F

9. Remarks (Applicable Manufacturer's Data Reports to be attached): 1) See attached N-2 Code Data Report for the replacement CRD assembly, Serial No 7155. 2) * Pressure test on the CRD bolted flanged connection - Test pressure of 1020 Psig and test temperature of 165° F recorded during ASME Section XI pressure test in accordance with PPM No OSP-RPV-R801 "Reactor Pressure Vessel Leakage Test".

CERTIFICATE OF COMPLIANCE

I certify that the statements made in this Owner's Report are correct and that this conforms to the requirements of the ASME Code, Section XI.
Type Code Symbol Stamp: Not Applicable
Certificate Of Authorization No.: Not Applicable
Expiration Date: Not Applicable

Prepared By Kuldip Singh - Program Lead Engineer (PLE) ***Signed By*** Kuldip Singh - Program Lead Engineer (PLE)

Date 6/26/09 ***Date*** 6/26/09

CERTIFICATE OF INSERVICE INSPECTION

I, the undersigned, holding a valid commission issued by the National Board of Boiler and Pressure Vessel Inspectors and the State of Washington ***and employed by*** Hartford Steam Boiler Of Connecticut of Hartford, Connecticut ***have inspected the components described in this Owner's Report during the period*** 4/1/2009 ***to*** 6/30/2009 ***and state to the best of my knowledge and belief, the Owner has performed examinations and taken corrective measures described in this Owner's Report in accordance with the requirements of the ASME Code, Section XI.***
By signing this certificate neither the Inspector nor his employer makes any warranty, expressed or implied, concerning the examinations and corrective measures described in this Owner's Report. Furthermore, neither the Inspector nor his employer shall be liable in any manner for any personal injury or property damage or a loss of any kind arising from or connected with this inspection.

Inspector's Signature ***Commissions*** 13172 WANI
National Board, State, and Endorsements

Date 6/30/2009

WOT No. 01142671 13

FORM N-2 MANUFA JRERS DATA REPORT FOR NUCLEAR RT AND APPURTENANCES

As required by the Provisions of the ASME Code Rules

1. (a) Manufactured by General Electric Company, Castle Hayne Rd., Wilmington, N. C.
(Name and address of Manufacturer of part)

(b) Manufactured for General Electric Company, San Jose, California
(Name and address of Manufacturer of completed nuclear component)

2. Identification-Manufacturer's Serial No. of Part 7155 Nat'l Bd. No.

(a) Constructed According to Drawing No. 761E387G2 Drawing Prepared by D. L. Peterson

(b) Description of Part Inspected Control Rod Drive, Model #7RDB144 C1

(c) Applicable ASME Code: Section III, Edition 1971, Addenda date None, Case No. 1361-1 Class 1

3. Remarks: Standard part for use with Reactor. Hydrostatically tested at 1820 psi minimum.
(Brief description of service for which component was designed)

We certify that the statements made in this report are correct and this vessel part or appurtenance as defined in the Code conforms to the rules of construction of the ASME Code Section III.
(The applicable Design Specification and Stress Report are not the responsibility of the part Manufacturer. An appurtenance Manufacturer is responsible for furnishing a separate Design Specification and Stress Report if the appurtenance is not included in the component Design Specification and Stress Report.)

Date June 13 19 75 Signed GE, BWRSD - REM (Manufacturer) By

Certificate of Authorization Expires June 20, 1975 Certificate of Authorization No. NPT - 462

CERTIFICATION OF DESIGN FOR APPURTENANCE (when applicable)

Design information on file at General Electric Co., BWRSD-REM, Castle Hayne Rd., Wilmington

Stress analysis report on file at General Electric Co., BWRSD-REM, Castle Hayne Rd., Wilmington

Design specifications certified by Vernon W. Pence Prof. Eng. State Calif. Reg. No. 14488

Stress analysis report certified by Vernon W. Pence Prof. Eng. State Calif. Reg. No. 14488

CERTIFICATE OF SHOP INSPECTION

I, the undersigned, holding a valid commission issued by the National Board of Boiler and Pressure Vessel Inspectors and/or the State or Province of North Carolina and employed by Department of Labor of State of North Carolina have inspected the part of a pressure vessel described in this Manufacturer's Partial Data Report on June 13 19 75, and state that to the best of my knowledge and belief, the Manufacturer has constructed this part in accordance with the ASME Code Section III.

By signing this certificate, neither the Inspector nor his employer makes any warranty, expressed or implied, concerning the part described in this Manufacturer's Partial Data Report. Furthermore, neither the Inspector nor his employer shall be liable in any manner for any personal injury or property damage or a loss of any kind arising from or connected with this inspection.

Date June 13 19 75

FOR INFORMATION ONLY

Inspector's Signature

Commissions NC 723, PA. NC 1766, Ohio
National Board, State, Province and No.

761E387G2
7155

FORM N-2 (back)

Items 4–8 incl. to be completed for single wall vessels, jackets of jacketed vessels, or shells of heat exchangers.

4. Shell: Material ____ (Kind & Spec. No.) ____ T.S. ____ (Min. of Range Specified) Nominal Thickness ____ in. Corrosion Allowance ____ in. Dia. ____ ft. ____ in. Length ____ ft. ____ in.

5. Seams: Long ____ H.T.[1] ____ R.T. ____ Efficiency ____ %

Girth ____ H.T.[1] ____ R.T. ____ No. of Courses ____

6. Heads: (a) Material ____ T.S. ____ (b) Material ____ T.S. ____

Location (Top, bottom, ends)	Thickness	Crown Radius	Knuckle Radius	Elliptical Ratio	Conical Apex Angle	Hemispherical Radius	Flat Diameter	Side to Press. (Conv. or Conc.)
(a)								
(b)								

If removable, bolts used ____ (Material, Spec. No., T.S., Size, Number) Other fastening ____ (Describe or attach sketch)

7. Jacket Closure: ____ (Describe as ogee and weld, bar, etc. If bar give dimensions, if bolted, describe or sketch)

8. Design pressure[2] 1250 psi at 575 °F

Drop Weight ____
Charpy Impact ____ ft-lb
at temp. of ____ °F

Items 9 and 10 to be completed for tube sections

9. Tube Sheets: Stationary. Material ____ (Kind & Spec. No.) Dia. ____ (Subject to pressure) Thickness ____ in. Attachment ____ (Welded, Bolted)

Floating. Material ____ Dia. ____ Thickness ____ in. Attachment ____

10. Tubes: Material ____ O.D. ____ in. Thickness ____ inches or gage. Number ____ Type ____ (Str. or U)

Items 11–14 incl. to be completed for inner chambers of jacketed vessels, or channels of heat exchangers.

11. Shell: Material ____ (Kind & Spec. No.) T.S. ____ (Min. of Range Specified) Nominal Thickness ____ in. Corrosion Allowance ____ in. Dia. ____ ft. ____ in. Length ____ ft. ____ in.

12. Seams: Long ____ H.T.[1] ____ R.T. ____ Efficiency ____ %

Girth ____ H.T.[1] ____ R.T. ____ No. of Courses ____

13. Heads (a) Material ____ T.S. ____ (b) Material ____ T.S. ____

Location	Thickness	Crown Radius	Knuckle Radius	Elliptical Ratio	Conical Apex Angle	Hemispherical Radius	Flat Diameter	Side to Press. (Conv. or Conc.)
(a) Top, bottom, ends								
(b) Channel								

If removable, bolts used (a) ____ (b) ____ (c) ____ Other fastening ____ (Describe or attach sketch)

14. Design pressure[2] ____ psi at ____ °F

Drop Weight ____
Charpy Impact ____ ft-lb
at temp. of ____ °F

Items below to be completed for all vessels where applicable.

15. Safety Valve Outlets: Number ____ Size ____ Location ____

16. Nozzles:

Purpose (Inlet, Outlet, Drain)	Number	Dia. or Size	Type	Material	Thickness	Reinforcement Material	How Attached

17. Inspection Openings: Manholes, No. ____ Size ____ Location ____
Handholes, No. ____ Size ____ Location ____
Threaded, No. ____ Size ____ Location ____

18. Supports: Skirt ____ (Yes or No) Lugs ____ (Number) Legs ____ (Number) Other ____ (Describe) Attached ____ (Where & How)

[1] If Postweld Heat-Treated

7V0A0C0A3

WOT No 01142671 14

ENERGY NORTHWEST
People · Vision · Solutions

FORM NIS-2 OWNER'S REPORT FOR REPAIR/REPLACEMENT ACTIVITY
As Required By The Provisions Of The ASME Code Section XI

Date: 06/26/2009
Sheet: 1 Of 1
Unit: Not Applicable

1. Owner: Energy Northwest
Address: Columbia Generating Station, North Power Plant Loop, Richland, Washington, 99352
2. Plant: Columbia Generating Station
Address: Columbia Generating Station, North Power Plant Loop, Richland, Washington, 99352
3. (a) Work Performed By: Energy Northwest
(b) Repair/Replacement Organization P.O. No, Job No, etc.: Energy Northwest
(c) Type Code Symbol Stamp: Not Applicable
(d) Certificate Of Authorization No.: Not Applicable
(e) Expiration Date: Not Applicable
4. Identification Of System: Control Rod Drive (CRD) System
5. (a) Applicable Construction Code: ASME Section III, Code Class 1, 1971 Edition with no Addenda, Code Case: Note 1
(b) Applicable Edition Of ASME Section XI Used For Repair/Replacement Activity: 2001 Edition with 2003 Addenda
(c) Applicable ASME Section XI Case(s): None
6. Identification Of Components

Name Of Component	Name Of Manufacturer	Manufacturer's Serial No	National Board No	Other I.D.	Year Built	Corrected, Removed Or Installed	ASME Code Stamped (Yes Or No) Code Class
CRD	GE	7408	N/A	N/A	1975	Removed	Yes, Code Class 1
CRD	GE	6410	N/A	N/A	1974	Installed	Yes, Code Class 1

7. Description Of Work Performed: Replaced Control Rod Drive (CRD) assembly at Core Location 26-27. The replacement work was performed in accordance with plant procedure PPM No 10.5.7 "Control Rod Drive Removal And Replacement" as follows:

1) Removed all eight (8) existing cap screws from the CRD assembly bolted flanged connection.
2) Removed existing CRD assembly, Serial No 7408.
3) Performed VT-1 visual examination on all eight (8) new replacement cap screws. VT-1 visual examination results acceptable.
4) Installed replacement CRD assembly, Serial No 6410.
5) Installed eight (8) VT-1 visually examined new replacement cap screws for the CRD assembly bolted flanged connection.
6) Torqued the cap screws for the CRD assembly bolted flanged connection to the required torque values.
7) Performed VT-2 visual examination during pressure test on CRD assembly bolted flanged connection to confirm pressure boundary integrity of the joint. No leakage was observed during pressure test.

NOTES

1) The applicable ASME Code Cases, if any are listed on the ASME Code Data Reports.
2) The replacement CRD assembly, Serial No 6410 is certified to comply with ASME Section III, Code Class 1, 1971 Edition with no Addenda requirements.
3) Eight (8) new replacement cap screws, SA-540 Gr. B23, Class 4, Heat No 56624, Heat (Trace) Code No OH50.
4) VT-1 visual examination Report No 3RPV-001 for the new replacement cap screws.

WOT No 01142671 14

ENERGY NORTHWEST
People · Vision · Solutions

FORM NIS-2 OWNER'S REPORT FOR REPAIR/REPLACEMENT ACTIVITY (Back)

8 Tests Conducted: Hydrostatic ☐ **Pneumatic** ☐ **Nominal Operating Pressure** ☐ **Other** ☐ *
Exempt ☐ **Test Pressure:** 1020 Psig **Test Temperature:** 165° F

9. Remarks (Applicable Manufacturer's Data Reports to be attached): 1) See attached N-2 Code Data Report for the replacement CRD assembly, Serial No 6410. 2) * Pressure test on the CRD bolted flanged connection - Test pressure of 1020 Psig and test temperature of 165° F recorded during ASME Section XI pressure test in accordance with PPM No OSP-RPV-R801 "Reactor Pressure Vessel Leakage Test".

CERTIFICATE OF COMPLIANCE

I certify that the statements made in this Owner's Report are correct and that this conforms to the requirements of the ASME Code, Section XI.
Type Code Symbol Stamp: Not Applicable
Certificate Of Authorization No.: Not Applicable
Expiration Date: Not Applicable

Prepared By Kuldip Singh — Kuldip Singh - Program Lead Engineer (PLE)
Date 6/26/05

Signed By Kuldip Singh — Kuldip Singh - Program Lead Engineer (PLE)
Date 6/26/05

CERTIFICATE OF INSERVICE INSPECTION

I, the undersigned, holding a valid commission issued by the National Board of Boiler and Pressure Vessel Inspectors and the State of Washington ***and employed by*** Hartford Steam Boiler Of Connecticut of Hartford, Connecticut ***have inspected the components described in this Owner's Report during the period*** 4/1/2009 ***to*** 6/30/2009 ***and state to the best of my knowledge and belief, the Owner has performed examinations and taken corrective measures described in this Owner's Report in accordance with the requirements of the ASME Code, Section XI.***
By signing this certificate neither the Inspector nor his employer makes any warranty, expressed or implied, concerning the examinations and corrective measures described in this Owner's Report. Furthermore, neither the Inspector nor his employer shall be liable in any manner for any personal injury or property damage or a loss of any kind arising from or connected with this inspection.

Inspector's Signature

Commissions 13172 WANI
National Board, State, and Endorsements

Date 6/30/2009

WO7 No. 01142671 14

FORM N-2 MANUFACTURERS DATA REPORT FOR NUCLEAR PART AND APPURTENANCES

As required by the Provisions of the ASME Code Rules

1. (a) Manufactured by General Electric Company, Castle Hayne Rd., Wilmington, N. C. 6/26/09.
(Name and address of Manufacturer of part)

(b) Manufactured for General Electric Company, San Jose, California
(Name and address of Manufacturer of completed nuclear component)

2. Identification-Manufacturer's Serial No. of Part 6410 Nat'l Bd. No.

(a) Constructed According to Drawing No. 761E387G2 Drawing Prepared by D. L. Peterson

(b) Description of Part Inspected Control Rod Drive, Model #7RDB144 C1

(c) Applicable ASME Code: Section III, Edition 1971, Addenda date None, Case No. 1361-1 Class 1

3. Remarks: Standard part for use with Reactor. Hydrostatically tested at 1820 psi minimum.
(Brief description of service for which component was designed)

FOR INFORMATION ONLY

We certify that the statements made in this report are correct and this vessel part or appurtenance as defined in the Code conforms to the rules of construction of the ASME Code Section III.
(The applicable Design Specification and Stress Report are not the responsibility of the part Manufacturer. An appurtenance Manufacturer is responsible for furnishing a separate Design Specification and Stress Report if the appurtenance is not included in the component Design Specification and Stress Report.)

Date October 28 19 74 Signed GE, BWRSD - REM (Manufacturer) By

Certificate of Authorization Expires June 20, 1975 Certificate of Authorization No. NPT - 462

CERTIFICATION OF DESIGN FOR APPURTENANCE (when applicable)

Design information on file at General Electric Co., BWRSD-REM, Castle Hayne Rd., Wilmington

Stress analysis report on file at General Electric Co., BWRSD-REM, Castle Hayne Rd., Wilmington

Design specifications certified by Vernon W. Pence Prof. Eng. State Calif. Reg. No. 14488

Stress analysis report certified by Vernon W. Pence Prof. Eng. State Calif. Reg. No. 14488

CERTIFICATE OF SHOP INSPECTION

I, the undersigned, holding a valid commission issued by the National Board of Boiler and Pressure Vessel Inspectors and/or the State or Province of North Carolina and employed by Department of Labor of State of North Carolina have inspected the part of a pressure vessel described in this Manufacturer's Partial Data Report on October 28 19 74, and state that to the best of my knowledge and belief, the Manufacturer has constructed this part in accordance with the ASME Code Section III.

By signing this certificate, neither the Inspector nor his employer makes any warranty, expressed or implied, concerning the part described in this Manufacturer's Partial Data Report. Furthermore, neither the Inspector nor his employer shall be liable in any manner for any personal injury or property damage or a loss of any kind arising from or connected with this inspection.

Date October 28 19 74

Inspector's Signature

Commissions NC 723, PA. NC 1766, Ohio
National Board, State, Province and No.

2X0036720

761E387G002
6410

FORM N-2 (back)

Items 4–8 Incl. to be completed for single wall vessels, jackets of jacketed vessels, or shells of heat exchangers.

4. Shell: Material _____ (Kind & Spec. No.) T.S. _____ (Min. of Range Specified) Nominal Thickness ____ in. Corrosion Allowance ____ in. Dia. ____ ft. ____ in. Length ____ ft. ____ in.

5. Seams: Long _____ H.T.[1] _____ R.T. _____ Efficiency _____ %

Girth _____ H.T.[1] _____ R.T. _____ No. of Courses _____

6. Heads: (a) Material _____ T.S. _____ (b) Material _____ T.S. _____

Location (Top, bottom, ends)	Thickness	Crown Radius	Knuckle Radius	Elliptical Ratio	Conical Apex Angle	Hemispherical Radius	Flat Diameter	Side to Press. (Conv. or Conc.)
(a)								
(b)								

If removable, bolts used _____ (Material, Spec. No., T.S., Size, Number) Other fastening _____ (Describe or attach sketch)

7. Jacket Closure: _____ (Describe as ogee and weld, bar, etc. If bar give dimensions, if bolted, describe or sketch.)

8. Design pressure[2] 1250 psi at 575 °F

Drop Weight _____
Charpy Impact _____ ft-lb
at temp. of _____ °F

Items 9 and 10 to be completed for tube sections

FOR INFORMATION ONLY

9. Tube Sheets: Stationary. Material _____ (Kind & Spec. No.) Dia. _____ (Subject to pressure) Thickness ____ in. Attachment _____ (Welded, Bolted)

Floating. Material _____ Dia. _____ Thickness ____ in. Attachment _____

10. Tubes: Material _____ O.D. ____ in. Thickness _____ inches or gage. Number _____ Type _____ (Str. or U)

Items 11–14 incl. to be completed for inner chambers of jacketed vessels, or channels of heat exchangers.

11. Shell: Material _____ (Kind & Spec. No.) T.S. _____ (Min. of Range Specified) Nominal Thickness ____ in. Corrosion Allowance ____ in. Dia. ____ ft. ____ in. Length ____ ft. ____ in.

12. Seams: Long _____ H.T.[1] _____ R.T. _____ Efficiency _____ %

Girth _____ H.T.[1] _____ R.T. _____ No. of Courses _____

13. Heads (a) Material _____ T.S. _____ (b) Material _____ T.S. _____

Location	Thickness	Crown Radius	Knuckle Radius	Elliptical Ratio	Conical Apex Angle	Hemispherical Radius	Flat Diameter	Side to Press. (Conv. or Conc.)
(a) Top, bottom, ends								
(b) Channel								

If removable, bolts used (a) _____ (b) _____ (c) _____ Other fastening _____ (Describe or attach sketch)

14. Design pressure[2] _____ psi at _____ °F

Drop Weight _____
Charpy Impact _____ ft-lb
at temp. of _____ °F

Items below to be completed for all vessels where applicable.

15. Safety Valve Outlets: Number _____ Size _____ Location _____

16. Nozzles:

Purpose (Inlet, Outlet, Drain)	Number	Dia. or Size	Type	Material	Thickness	Reinforcement Material	How Attached

17. Inspection Openings: Manholes, No. _____ Size _____ Location _____
Handholes, No. _____ Size _____ Location _____
Threaded, No. _____ Size _____ Location _____

ZX00367221

18. Supports: Skirt _____ (Yes or No) Lugs _____ (Number) Legs _____ (Number) Other _____ (Describe) Attached _____ (Where & How)

[1] If Required Heat-Treated

WOT No 01142671 15

ENERGY NORTHWEST
People · Vision · Solutions

FORM NIS-2 OWNER'S REPORT FOR REPAIR/REPLACEMENT ACTIVITY
As Required By The Provisions Of The ASME Code Section XI

1. Owner: Energy Northwest
Address: Columbia Generating Station, North Power Plant Loop, Richland, Washington, 99352
2. Plant: Columbia Generating Station
Address: Columbia Generating Station, North Power Plant Loop, Richland, Washington, 99352

Date: 06/26/2009
Sheet: 1 Of 1
Unit: Not Applicable

3. (a) Work Performed By: Energy Northwest
(b) Repair/Replacement Organization P.O. No, Job No, etc.: Energy Northwest
(c) Type Code Symbol Stamp: Not Applicable
(d) Certificate Of Authorization No.: Not Applicable
(e) Expiration Date: Not Applicable
4. Identification Of System: Control Rod Drive (CRD) System
5. (a) Applicable Construction Code: ASME Section III, Code Class 1, 1974 Edition with Winter 1975 Addenda, Code Case: Note 1
(b) Applicable Edition Of ASME Section XI Used For Repair/Replacement Activity: 2001 Edition with 2003 Addenda
(c) Applicable ASME Section XI Case(s): None
6. Identification Of Components

Name Of Component	Name Of Manufacturer	Manufacturer's Serial No	National Board No	Other I.D.	Year Built	Corrected, Removed Or Installed	ASME Code Stamped (Yes Or No) Code Class
CRD	GE	2989	N/A	N/A	1975	Removed	Yes, Code Class 1
CRD	GE	A8652	N/A	N/A	1988	Installed	Yes, Code Class 1

7. Description Of Work Performed: Replaced Control Rod Drive (CRD) assembly at Core Location 06-19. The replacement work was performed in accordance with plant procedure PPM No 10.5.7 "Control Rod Drive Removal And Replacement" as follows:

1) Removed all eight (8) existing cap screws from the CRD assembly bolted flanged connection.
2) Removed existing CRD assembly, Serial No 2989.
3) Performed VT-1 visual examination on all eight (8) new replacement cap screws. VT-1 visual examination results acceptable.
4) Installed replacement CRD assembly, Serial No A8652.
5) Installed eight (8) VT-1 visually examined new replacement cap screws for the CRD assembly bolted flanged connection.
6) Torqued the cap screws for the CRD assembly bolted flanged connection to the required torque values.
7) Performed VT-2 visual examination during pressure test on CRD assembly bolted flanged connection to confirm pressure boundary integrity of the joint. No leakage was observed during pressure test.

NOTES -

1) The applicable ASME Code Cases, if any are listed on the ASME Code Data Reports.
2) The replacement CRD assembly, Serial No A8652 is certified to comply with ASME Section III, Code Class 1, 1974 Edition with Winter 1975 Addenda requirements.
3) Eight (8) new replacement cap screws, SA-540 Gr. B23, Class 4, Heat No 56624, Heat (Trace) Code No OH50.
4) VT-1 visual examination Report No 3RPV-001 for the new replacement cap screws.

WOT No 01142671 15

ENERGY NORTHWEST
People · Vision · Solutions

FORM NIS-2 OWNER'S REPORT FOR REPAIR/REPLACEMENT ACTIVITY (Back)

8 Tests Conducted: Hydrostatic [ ] **Pneumatic** [ ] **Nominal Operating Pressure** [ ] **Other** [*]
Exempt [ ] **Test Pressure:** 1020 Psig **Test Temperature:** 165° F

9. Remarks (Applicable Manufacturer's Data Reports to be attached): 1) See attached N-2 Code Data Report for the replacement CRD assembly, Serial No A8652. 2) * Pressure test on the CRD bolted flanged connection - Test pressure of 1020 Psig and test temperature of 165° F recorded during ASME Section XI pressure test in accordance with PPM No OSP-RPV-R801 "Reactor Pressure Vessel Leakage Test".

CERTIFICATE OF COMPLIANCE

I certify that the statements made in this Owner's Report are correct and that this conforms to the requirements of the ASME Code, Section XI.
Type Code Symbol Stamp: Not Applicable
Certificate Of Authorization No.: Not Applicable
Expiration Date: Not Applicable

Prepared By Kuldip Singh - Program Lead Engineer (PLE) ***Signed By*** Kuldip Singh - Program Lead Engineer (PLE)

Date 6/26/09 ***Date*** 6/26/09.

CERTIFICATE OF INSERVICE INSPECTION

I, the undersigned, holding a valid commission issued by the National Board of Boiler and Pressure Vessel Inspectors and the State of Washington ***and employed by*** Hartford Steam Boiler Of Connecticut of Hartford, Connecticut ***have inspected the components described in this Owner's Report during the period*** 4/1/2009 ***to*** 6/30/2009 ***and state to the best of my knowledge and belief, the Owner has performed examinations and taken corrective measures described in this Owner's Report in accordance with the requirements of the ASME Code, Section XI.***
By signing this certificate neither the Inspector nor his employer makes any warranty, expressed or implied, concerning the examinations and corrective measures described in this Owner's Report. Furthermore, neither the Inspector nor his employer shall be liable in any manner for any personal injury or property damage or a loss of any kind arising from or connected with this inspection.

Inspector's Signature ***Commissions*** 13172 WANI
National Board, State, and Endorsements

Date 6/30/2009

WOT No. 01142671 15

Philip Smith 6/26/09.

FORM N-2 NPT CERTIFICATE HOLDERS' DATA REPORT FOR NUCLEAR PART AND APPURTENANCES*
As required by the Provision of the ASME Code Rules, Section III, Div. 1

1. Manufactured & Certified by: GE Company, 2117 Castle Hayne Rd., Wilmington, N.C. 28402
(Name and Address of NPT Certificate Holder)

(b) Manufactured for: WNP-2, RICHLAND, Wa. 99352
(Name and Address of N Certificate Holder for completed nuclear component)

2. Identification-Certificate Holders's S/N of Part: A8652 Nat'l Bd. No. N/A

(a) Constructed According to Drawing No: 919D258G003 Dwg. Prepared by D. L. Peterson

(b) Description of Part Inspected: CYLINDER TUBE & FLANGE

(c) Applicable ASME Code: Section III, Edition 1974, Addenda Date W'75 Case No. 1361-2 Class 1

3. REMARKS: Sub-assembly of Control Rod Drive for use with reactor.
(Brief description of service for which component was designed)
Hydrostatically tested at 1825 psi. min.

*Sheet 1 of 2

We certify that the statements in this report are correct and this vessel part or appurtenance as defined in the code conforms to the rules of construction of the ASME Code Section III. (The applicable Designed Specification and Stress Report are not the responsibility of the NPT Certificate Holder for parts. An NPT Certification Holder for appurtenances is responsible for furnishing a separate Design Specification and Stress Report if the appurtenance is not included in the component Design Specification and Stress Report).

DATE: 5/27, 19 88 Signed GE-NEBG-NF&CM-QA By [signature]
(NPT Certificate Holder)

C ificate Of Authorization Expires: 6/16/90 Certification of Authorization No.: NPT N-1151

CERTIFICATION OF DESIGN FOR APPURTENANCE

Design information on file at GE COMPANY, SAN JOSE, CALIFORNIA

Stress analysis report on file at GE COMPANY, SAN JOSE, CALIFORNIA
DC22A6253 Rev. 0
Design specification certified by BJORN HAABERG Prof. Eng. State CALIF. Reg. No. 15570
DC22A6254 Rev. 0.
Stress analysis report certified by EDWARD YOSHIO Prof. Eng. State CALIF. Reg. No. M018646

CERTIFICATION OF SHOP INSPECTION

I, the undersigned, holding a valid commission by the National Board of Boiler and Pressure Inspectors and/or the State or Province of NORTH CAROLINA and employed by DEPARTMENT OF LABOR of STATE OF NORTH CAROLINA have inspected the part of a pressure vessel described in this Partial Data Report on 5/27 19 88, and state that to the best of my knowledge and belief, the NPT Certificate Holder has constructed this part in accordance with the ASME Code Section III.

By signing this certificate, neither the Inspector nor his employer makes any warranty, expressed or implied, concerning the part described in the Partial Data Report. Furthermore, neither the Inspector nor his employer shall be liable in any manner for any personal injury or property damages or a loss of any kind arising from or connected with this inspection.

5/27, 19 88 [signature] N.C. 723, PA.WC1766, OHIO

DATE Inspector's Signature National Board, State, Province and No.

*S plemental sheets in form of lists, sketches or drawing may be used provided (1) size is 8-1/2" X 11", (2) information in 1-2 on this Data Report is included on each sheet, and (3) each sheet is numbered and number of sheets is recorded in Item 3. "REMARKSs"

(10/77)

FORM N-2 (back)

Items 4-8 Incl. to be completed for single wall vessels, jackets vessels, or shells of heat exchangers.

4. Shell: Material_____ T.S._____ Nominal Thickness___in. Corrosion Allowance____in Dia.____ft.___in. Length___ft.____in.
(Kind & Spec.No) (Min.ofRange Specified)

5. Seams: Long_____ H.T.[1]_____ R.T._____ Efficiency_____%

Girth_____ H.T.[1]_____ R.T._____ No. of Courses_____

6. Heads: (a) Material_____ T.S._____ (b)Material_____ T.S._____

Location (Top Bottom,Ends)	Thickness	Crown Radius	Knuckle Radius	Elliptical Ratio	Concial Apex Angle	Hemispherical Radius	Flat Diameter	Side to Press. (conv.or conc.)
(a)_____	_____	_____	_____	_____	_____	_____	_____	_____
(b)_____	_____	_____	_____	_____	_____	_____	_____	_____

If removable, bolts used_____ Other fastening_____
(Material,Spec.No., T.S. Size Number) (Describe or attach sketch)

7. Jacket Closure:_____
(Describe as ogee and weld,bar,etc. If bar give dimensions, if bolts, describe or shetch)

8. Design Pressure [2] 1250 psi at 575 °F Drop Weight_____ Charpy Impact_____ ft-lb at temp. of_____ °f

Items 9 and 10 to be completed for tube sections.

9. Tube Sheets: Stationary Mat'l._____ Dia._____ Thickness__in. Attachment_____
(Kind of Spec. No.) (Subj.to Press.) (Welded, Bolted)
Floating. Material _____ Dia._____ Thickness____in. Attachment_____

10. Tubes: Material_____ O.D._____in. Thickness_____ inches or gage. Number_____ Type_____
(Str. or U)

Items 11-14 incl. to be completed for inner chambers of jacketed vessels, or channels of heat exchangers

11. Shell: Material_____ T.S._____ Nominal Thickness___in. Corrosion Allowance___in. Dia.___ft.___in___Length___ft.___in.
(Kind&Spec.No.) (Min.ofRange Specified)

12. Seams: Long_____ H.T.[1]_____ R.T._____ Efficiency_____%
Girth_____ H.T.[1]_____ R.T._____ No. of Courses_____

13. Heads (a) Material_____ T.S._____ (b)Material_____ T.S._____

Location (a)Top, Bottom, End	Ticnkess	Crown Radius	Knucle Radius	Elliptical Ratio	Concial Apex Angle	Hemispherical Radius	Fat Diameter	Side to Press (Conv.or Conc.)
(b)Channel	_____	_____	_____	_____	_____	_____	_____	_____

If removable, bolts used (a)_____ (b)_____ (c)_____ Other Fastening_____
(Describe or attach sketch
Drop Weight_____,
Charpy Impact_____ ft-lb
at temp. of _____ °F

14. Design pressure[2]_____ psi at_____ °F

Items below to be completed for all vessels where applicable.

15. Safety Valve Outlets: Number_____ Size_____ Location_____

16. Nozzles:

Purpose (Inlet Outlet, Drain)	Number	Dia or Size	Type	Material	Thickness	Reinforcement Material	Attached
_____	_____	_____	_____	_____	_____	_____	_____
_____	_____	_____	_____	_____	_____	_____	_____

17. Inspection Openings: Manholes, No._____ Size_____ Location_____
Handles, No._____ Size_____ Location_____
Threaded, No._____ Size_____ Location_____

18. Supports: Shirt_____ Lugs_____ Legs_____ Other_____ Attached_____
(Yes or No) (Number) (Number) (Describe) (Where & How)

[1] If Postweld Heat-Treated.

[2] List other internal or external pressure with conincident temperature when applicalbe.

WOT No 01142671 16

ENERGY NORTHWEST
People · Vision · Solutions

FORM NIS-2 OWNER'S REPORT FOR REPAIR/REPLACEMENT ACTIVITY
As Required By The Provisions Of The ASME Code Section XI

Date: 06/26/2009
Sheet: 1 Of 1
Unit: Not Applicable

1. Owner: Energy Northwest
Address: Columbia Generating Station, North Power Plant Loop, Richland, Washington, 99352
2. Plant: Columbia Generating Station
Address: Columbia Generating Station, North Power Plant Loop, Richland, Washington, 99352
3. (a) Work Performed By: Energy Northwest
(b) Repair/Replacement Organization P.O. No, Job No, etc.: Energy Northwest
(c) Type Code Symbol Stamp: Not Applicable
(d) Certificate Of Authorization No.: Not Applicable
(e) Expiration Date: Not Applicable
4. Identification Of System: Control Rod Drive (CRD) System
5. (a) Applicable Construction Code: ASME Section III, Code Class 1, 1971 Edition with no Addenda, Code Case: Note 1
(b) Applicable Edition Of ASME Section XI Used For Repair/Replacement Activity: 2001 Edition with 2003 Addenda
(c) Applicable ASME Section XI Case(s): None
6. Identification Of Components

Name Of Component	Name Of Manufacturer	Manufacturer's Serial No	National Board No	Other I.D.	Year Built	Corrected, Removed Or Installed	ASME Code Stamped (Yes Or No) Code Class
CRD	GE	7200	N/A	N/A	1975	Removed	Yes, Code Class 1
CRD	GE	6309	N/A	N/A	1975	Installed	Yes, Code Class 1

7. Description Of Work Performed: Replaced Control Rod Drive (CRD) assembly at Core Location 06-35. The replacement work was performed in accordance with plant procedure PPM No 10.5.7 "Control Rod Drive Removal And Replacement" as follows:

1) Removed all eight (8) existing cap screws from the CRD assembly bolted flanged connection.
2) Removed existing CRD assembly, Serial No 7200.
3) Performed VT-1 visual examination on all eight (8) new replacement cap screws. VT-1 visual examination results acceptable.
4) Installed replacement CRD assembly, Serial No 6309.
5) Installed eight (8) VT-1 visually examined new replacement cap screws for the CRD assembly bolted flanged connection.
6) Torqued the cap screws for the CRD assembly bolted flanged connection to the required torque values.
7) Performed VT-2 visual examination during pressure test on CRD assembly bolted flanged connection to confirm pressure boundary integrity of the joint. No leakage was observed during pressure test.

NOTES -

1) The applicable ASME Code Cases, if any are listed on the ASME Code Data Reports.
2) The replacement CRD assembly, Serial No 6309 is certified to comply with ASME Section III, Code Class 1, 1971 Edition with no Addenda requirements.
3) Eight (8) new replacement cap screws, SA-540 Gr. B23, Class 4, Heat No 56624, Heat (Trace) Code No OH50.
4) VT-1 visual examination Report No 3RPV-001 for the new replacement cap screws.

WOT No 01142671 16

ENERGY NORTHWEST
People · Vision · Solutions

FORM NIS-2 OWNER'S REPORT FOR REPAIR/REPLACEMENT ACTIVITY (Back)

8 Tests Conducted: Hydrostatic [ ] **Pneumatic** [ ] **Nominal Operating Pressure** [ ] **Other** [ ]
Exempt [ ] **Test Pressure:** 1020 Psig **Test Temperature:** 165° F

9. Remarks (Applicable Manufacturer's Data Reports to be attached): 1) See attached N-2 Code Data Report for the replacement CRD assembly, Serial No 6309. 2) * Pressure test on the CRD bolted flanged connection - Test pressure of 1020 Psig and test temperature of 165° F recorded during ASME Section XI pressure test in accordance with PPM No OSP-RPV-R801 "Reactor Pressure Vessel Leakage Test".

CERTIFICATE OF COMPLIANCE

I certify that the statements made in this Owner's Report are correct and that this conforms to the requirements of the ASME Code, Section XI.
Type Code Symbol Stamp: Not Applicable
Certificate Of Authorization No.: Not Applicable
Expiration Date: Not Applicable

Prepared By Kuldip Singh - Program Lead Engineer (PLE) ***Signed By*** Kuldip Singh - Program Lead Engineer (PLE)

Date 6/26/09 ***Date*** 6/26/09.

CERTIFICATE OF INSERVICE INSPECTION

I, the undersigned, holding a valid commission issued by the National Board of Boiler and Pressure Vessel Inspectors and the State of Washington ***and employed by*** Hartford Steam Boiler Of Connecticut of Hartford, Connecticut ***have inspected the components described in this Owner's Report during the period*** 4/1/2009 ***to*** 6/30/2009 ***and state to the best of my knowledge and belief, the Owner has performed examinations and taken corrective measures described in this Owner's Report in accordance with the requirements of the ASME Code, Section XI.***
By signing this certificate neither the Inspector nor his employer makes any warranty, expressed or implied, concerning the examinations and corrective measures described in this Owner's Report. Furthermore, neither the Inspector nor his employer shall be liable in any manner for any personal injury or property damage or a loss of any kind arising from or connected with this inspection.

Inspector's Signature ***Commissions*** 13172 WANI
National Board, State, and Endorsements

Date 6/30/2009

WOT No. 01142671 16

FORM N-2 MANUF "URE... DATA REPORT FOR NUCLEAR ...RT AND APPURTENANCES

As required by the Provisions of the ASME Code Rules

1. (a) Manufactured by General Electric Company, Castle Hayne Rd., Wilmington, N. C.
(Name and address of Manufacturer of part)

(b) Manufactured for General Electric Company, San Jose, California
(Name and address of Manufacturer of completed nuclear component)

2. Identification-Manufacturer's Serial No. of Part 6309 Nat'l Bd. No.

(a) Constructed According to Drawing No. 761E387G2 Drawing Prepared by D. L. Peterson

(b) Description of Part Inspected Control Rod Drive, Model #7RDB144 C1

(c) Applicable ASME Code: Section III, Edition 1971, Addenda date None, Case No. 1361-1 Class 1

3. Remarks: Standard part for use with Reactor. Hydrostatically tested at 1620 psi minimum.
(Brief description of service for which component was designed)

FOR INFORMATION ONLY

We certify that the statements made in this report are correct and this vessel part or appurtenance as defined in the Code conforms to the rules of construction of the ASME Code Section III.
(The applicable Design Specification and Stress Report are not the responsibility of the part Manufacturer. An appurtenance Manufacturer is responsible for furnishing a separate Design Specification and Stress Report if the appurtenance is not included in the component Design Specification and Stress Report.)

Date January 24 1975 Signed GE, BWRSD - REM (Manufacturer) By

Certificate of Authorization Expires June 20, 1975 Certificate of Authorization No. NPT - 462

CERTIFICATION OF DESIGN FOR APPURTENANCE (when applicable)

Design information on file at General Electric Co., BWRSD-REM, Castle Hayne Rd., Wilmington

Stress analysis report on file at General Electric Co., BWRSD-REM, Castle Hayne Rd., Wilmington

Design specifications certified by Vernon W. Pence Prof. Eng. State Calif. Reg. No. 14488

Stress analysis report certified by Vernon W. Pence Prof. Eng. State Calif. Reg. No. 14488

CERTIFICATE OF SHOP INSPECTION

I, the undersigned, holding a valid commission issued by the National Board of Boiler and Pressure Vessel Inspectors and/or the State or Province of North Carolina and employed by Department of Labor of State of North Carolina have inspected the part of a pressure vessel described in this Manufacturer's Partial Data Report on January 24 1975, and state that to the best of my knowledge and belief, the Manufacturer has constructed this part in accordance with the ASME Code Section III.

By signing this certificate, neither the Inspector nor his employer makes any warranty, expressed or implied, concerning the part described in this Manufacturer's Partial Data Report. Furthermore, neither the Inspector nor his employer shall be liable in any manner for any personal injury or property damage or a loss of any kind arising from or connected with this inspection.

Date January 24 1975

E. L. Shenill
Inspector's Signature

Commissions NC 723, PA. NC 1766, Ohio
National Board, State, Province and No.

6309
761E387G002

FORM N-2 (back)

Items 1-8 incl. to be completed for single wall vessels, jackets of jacketed vessels, or shells of heat exchangers.

4. Shell: Material ____ (Kind & Spec. No.) T.S. ____ (Min. of Range Specified) Nominal Thickness ____ in. Corrosion Allowance ____ in. Dia. ____ ft. ____ in. Length ____ ft. ____ in.

5. Seams: Long ____ H.T.[1] ____ R.T. ____ Efficiency ____ %

Girth ____ H.T.[1] ____ R.T. ____ No. of Courses ____

6. Heads: (a) Material ____ T.S. ____ (b) Material ____ T.S. ____

Location (Top, bottom, ends)	Thickness	Crown Radius	Knuckle Radius	Elliptical Ratio	Conical Apex Angle	Hemispherical Radius	Flat Diameter	Side to Press. (Conv. or Conc.)
(a)								
(b)								

If removable, bolts used ____ (Material, Spec. No., T.S., Size, Number) Other fastening ____ (Describe or attach sketch)

7. Jacket Closure: ____ (Describe as ogee and weld, bar, etc. If bar give dimensions, if bolted, describe or sketch)

8. Design pressure[2] 1250 psi at 575 °F Drop Weight ____ Charpy Impact ____ ft-lb at temp. of ____ °F

FOR INFORMATION ONLY

Items 9 and 10 to be completed for tube sections

9. Tube Sheets: Stationary. Material ____ (Kind & Spec. No.) Dia. ____ (Subject to pressure) Thickness ____ in. Attachment ____ (Welded, Bolted)

Floating. Material ____ Dia. ____ Thickness ____ in. Attachment ____

10. Tubes: Material ____ O.D. ____ in. Thickness ____ inches or gage. Number ____ Type ____ (Str. or U)

Items 11–14 incl. to be completed for inner chambers of jacketed vessels, or channels of heat exchangers.

11. Shell: Material ____ (Kind & Spec. No.) T.S. ____ (Min. of Range Specified) Nominal Thickness ____ in. Corrosion Allowance ____ in. Dia. ____ ft. ____ in. Length ____ ft. ____ in.

12. Seams: Long ____ H.T.[1] ____ R.T. ____ Efficiency ____ %

Girth ____ H.T.[1] ____ R.T. ____ No. of Courses ____

13. Heads (a) Material ____ T.S. ____ (b) Material ____ T.S. ____

Location	Thickness	Crown Radius	Knuckle Radius	Elliptical Ratio	Conical Apex Angle	Hemispherical Radius	Flat Diameter	Side to Press. (Conv. or Conc.)
(a) Top, bottom, ends								
(b) Channel								

If removable, bolts used (a) ____ (b) ____ (c) ____ Other fastening ____ (Describe or attach sketch)

14. Design pressure[2] ____ psi at ____ °F Drop Weight ____ Charpy Impact ____ ft-lb at temp. of ____ °F

Items below to be completed for all vessels where applicable.

15. Safety Valve Outlets: Number ____ Size ____ Location ____

16. Nozzles:

Purpose (Inlet, Outlet, Drain)	Number	Dia. or Size	Type	Material	Thickness	Reinforcement Material	How Attached

17. Inspection Openings: Manholes, No. ____ Size ____ Location ____
Handholes, No. ____ Size ____ Location ____
Threaded, No. ____ Size ____ Location ____

ZX00367137

18. Supports: Skirt ____ (Yes or No) Lugs ____ (Number) Legs ____ (Number) Other ____ (Describe) Attached ____ (Where & How)

WOT No 01142671 19

ENERGY NORTHWEST
People · Vision · Solutions

FORM NIS-2 OWNER'S REPORT FOR REPAIR/REPLACEMENT ACTIVITY
As Required By The Provisions Of The ASME Code Section XI

1. Owner: Energy Northwest
Address: Columbia Generating Station, North Power Plant Loop, Richland, Washington, 99352
2. Plant: Columbia Generating Station
Address: Columbia Generating Station, North Power Plant Loop, Richland, Washington, 99352

Date: 06/26/2009
Sheet: 1 Of 1
Unit: Not Applicable

3. (a) Work Performed By: Energy Northwest
(b) Repair/Replacement Organization P.O. No, Job No, etc.: Energy Northwest
(c) Type Code Symbol Stamp: Not Applicable
(d) Certificate Of Authorization No.: Not Applicable
(e) Expiration Date: Not Applicable
4. Identification Of System: Control Rod Drive (CRD) System
5. (a) Applicable Construction Code: ASME Section III, Code Class 1, 1971 Edition with no Addenda, Code Case: Note 1
(b) Applicable Edition Of ASME Section XI Used For Repair/Replacement Activity: 2001 Edition with 2003 Addenda
(c) Applicable ASME Section XI Case(s): None
6. Identification Of Components

Name Of Component	Name Of Manufacturer	Manufacturer's Serial No	National Board No	Other I.D.	Year Built	Corrected, Removed Or Installed	ASME Code Stamped (Yes Or No) Code Class
CRD	GE	A8977	N/A	N/A	1991	Removed	Yes, Code Class 1
CRD	GE	5485	N/A	N/A	1974	Installed	Yes, Code Class 1

7. Description Of Work Performed: Replaced Control Rod Drive (CRD) assembly at Core Location 10-47. The replacement work was performed in accordance with plant procedure PPM No 10.5.7 "Control Rod Drive Removal And Replacement" as follows:

1) Removed all eight (8) existing cap screws from the CRD assembly bolted flanged connection.
2) Removed existing CRD assembly, Serial No A8977.
3) Performed VT-1 visual examination on all eight (8) new replacement cap screws. VT-1 visual examination results acceptable.
4) Installed replacement CRD assembly, Serial No 5485.
5) Installed eight (8) VT-1 visually examined new replacement cap screws for the CRD assembly bolted flanged connection.
6) Torqued the cap screws for the CRD assembly bolted flanged connection to the required torque values.
7) Performed VT-2 visual examination during pressure test on CRD assembly bolted flanged connection to confirm pressure boundary integrity of the joint. No leakage was observed during pressure test.

NOTES -

1) The applicable ASME Code Cases, if any are listed on the ASME Code Data Reports.
2) The replacement CRD assembly, Serial No 5485 is certified to comply with ASME Section III, Code Class 1, 1971 Edition with no Addenda requirements.
3) Eight (8) new replacement cap screws, SA-540 Gr. B23, Class 4, Heat No 56624, Heat (Trace) Code No OH50.
4) VT-1 visual examination Report No 3RPV-001 for the new replacement cap screws.

WOT No 01142671 19

ENERGY NORTHWEST
People · Vision · Solutions

FORM NIS-2 OWNER'S REPORT FOR REPAIR/REPLACEMENT ACTIVITY (Back)

8 Tests Conducted: Hydrostatic [ ] **Pneumatic** [ ] **Nominal Operating Pressure** [ ] **Other** [*]
Exempt [ ] **Test Pressure:** 1020 Psig **Test Temperature:** 165° F

9. Remarks (Applicable Manufacturer's Data Reports to be attached): 1) See attached N-2 Code Data Report for the replacement CRD assembly, Serial No 5485. 2) * Pressure test on the CRD bolted flanged connection - Test pressure of 1020 Psig and test temperature of 165° F recorded during ASME Section XI pressure test in accordance with PPM No OSP-RPV-R801 "Reactor Pressure Vessel Leakage Test".

CERTIFICATE OF COMPLIANCE

I certify that the statements made in this Owner's Report are correct and that this conforms to the requirements of the ASME Code, Section XI.
Type Code Symbol Stamp: Not Applicable
Certificate Of Authorization No.: Not Applicable
Expiration Date: Not Applicable

Prepared By Kuldip Singh - Program Lead Engineer (PLE) ***Signed By*** Kuldip Singh - Program Lead Engineer (PLE)

Date 6/26/09 ***Date*** 6/26/09.

CERTIFICATE OF INSERVICE INSPECTION

I, the undersigned, holding a valid commission issued by the National Board of Boiler and Pressure Vessel Inspectors and the State of Washington ***and employed by*** Hartford Steam Boiler Of Connecticut of Hartford, Connecticut ***have inspected the components described in this Owner's Report during the period*** 4/1/2009 ***to*** 6/30/2009 ***and state to the best of my knowledge and belief, the Owner has performed examinations and taken corrective measures described in this Owner's Report in accordance with the requirements of the ASME Code, Section XI.***
By signing this certificate neither the Inspector nor his employer makes any warranty, expressed or implied, concerning the examinations and corrective measures described in this Owner's Report. Furthermore, neither the Inspector nor his employer shall be liable in any manner for any personal injury or property damage or a loss of any kind arising from or connected with this inspection.

Inspector's Signature ***Commissions*** 13172 WA NI
National Board, State, and Endorsements

Date 4/30/2009

W07 No. 0114267) 19

FORM N-2 MANUFACTURERS DATA REPORT FOR NUCLEAR PART AND APPURTENANCES

As required by the Provisions of the ASME Code Rules

1. (a) Manufactured by General Electric Company, Castle Hayne Rd., Wilmington, N. C. 6/24/09.
(Name and address of Manufacturer of part)

(b) Manufactured for General Electric Company, San Jose, California
(Name and address of Manufacturer of completed nuclear component)

2. Identification-Manufacturer's Serial No. of Part 5485 Nat'l Bd. No.

(a) Constructed According to Drawing No. 761E387G2 Drawing Prepared by D. L. Peterson

(b) Description of Part Inspected Control Rod Drive, Model #7RDB144 C1

(c) Applicable ASME Code: Section III, Edition 1971, Addenda date None, Case No. 1361-1 Class 1

3. Remarks: Standard part for use with Reactor. Hydrostatically tested at 1625 psi
(Brief description of service for which component was designed)
minimum.

We certify that the statements made in this report are correct and this vessel part or appurtenance as defined in the Code conforms to the rules of construction of the ASME Code Section III.
(The applicable Design Specification and Stress Report are not the responsibility of the part Manufacturer. An appurtenance Manufacturer is responsible for furnishing a separate Design Specification and Stress Report if the appurtenance is not included in the component Design Specification and Stress Report.)

Date December 17 19 74 Signed GE, BWRSD - REM (Manufacturer) By

Certificate of Authorization Expires June 20, 1975 Certificate of Authorization No. NPT - 462

CERTIFICATION OF DESIGN FOR APPURTENANCE (when applicable)

Design information on file at General Electric Co., BWRSD-REM, Castle Hayne Rd., Wilmington

Stress analysis report on file at General Electric Co., BWRSD-REM, Castle Hayne Rd., Wilmington

Design specifications certified by Vernon W. Pence Prof. Eng. State Calif. Reg. No. 14488

Stress analysis report certified by Vernon W. Pence Prof. Eng. State Calif. Reg. No. 14488

CERTIFICATE OF SHOP INSPECTION

I, the undersigned, holding a valid commission issued by the National Board of Boiler and Pressure Vessel Inspectors and/or the State or Province of North Carolina and employed by Department of Labor of State of North Carolina have inspected the part of a pressure vessel described in this Manufacturer's Partial Data Report on December 17 19 74, and state that to the best of my knowledge and belief, the Manufacturer has constructed this part in accordance with the ASME Code Section III.

By signing this certificate, neither the Inspector nor his employer makes any warranty, expressed or implied, concerning the part described in this Manufacturer's Partial Data Report. Furthermore, neither the Inspector nor his employer shall be liable in any manner for any personal injury or property damage or a loss of any kind arising from or connected with this inspection.

Date December 17 1974

Inspector's Signature

Commissions NC 723, PA. NC 1766, Ohio
National Board, State, Province and No.

105D5240G002
5485

FORM N-2 (back)

Items 1-3 inclusive to be completed for single wall vessels, jackets of jacketed vessels, or shells of heat exchangers.

4. Shell: Material _____ T.S. _____ Nominal Thickness ____ in. Corrosion Allowance ____ in. Dia. ____ ft. ____ in. Length ____ ft. ____ in.
(Kind & Spec. No.) (Min. of Range Specified)

5. Seams: Long _____ H.T.[1] _____ R.T. _____ Efficiency _____ %

Girth _____ H.T.[1] _____ R.T. _____ No. of Courses _____

6. Heads: (a) Material _____ T.S. _____ (b) Material _____ T.S. _____

Location (Top, bottom, ends)	Thickness	Crown Radius	Knuckle Radius	Elliptical Ratio	Conical Apex Angle	Hemispherical Radius	Flat Diameter	Side to Press. (Conv. or Conc.)
(a)								
(b)								

If removable, bolts used _____ Other fastening _____
(Material, Spec. No., T.S., Size, Number) (Describe or attach sketch)

7. Jacket Closure: _____
(Describe as ogee and weld, bar, etc. If bar give dimensions, if bolted, describe or sketch)

8. Design pressure[2] 1250 psi at 575 °F

Drop Weight _____
Charpy Impact _____ ft-lb.
at temp. of _____ °F

Items 9 and 10 to be completed for tube sections

9. Tube Sheets: Stationary. Material _____ Dia. _____ Thickness ____ in. Attachment _____
(Kind & Spec. No.) (Subject to pressure) (Welded, Bolted)

Floating. Material _____ Dia. _____ Thickness ____ in. Attachment _____

10. Tubes: Material _____ O.D. ____ in. Thickness _____ Inches or gage. Number _____ Type _____
(str. or U)

Items 11–14 incl. to be completed for inner chambers of jacketed vessels, or channels of heat exchangers.

11. Shell: Material _____ T.S. _____ Nominal Thickness ____ in. Corrosion Allowance ____ in. Dia. ____ ft. ____ in. Length ____ ft. ____ in.
(Kind & Spec. No.) (Min. of Range Specified)

12. Seams: Long _____ H.T.[1] _____ R.T. _____ Efficiency _____ %

Girth _____ H.T.[1] _____ R.T. _____ No. of Courses _____

13. Heads (a) Material _____ T.S. _____ (b) Material _____ T.S. _____

Location	Thickness	Crown Radius	Knuckle Radius	Elliptical Ratio	Conical Apex Angle	Hemispherical Radius	Flat Diameter	Side to Press. (Conv. or Conc.)
(a) Top, bottom, ends								
(b) Channel								

If removable, bolts used (a) _____ (b) _____ (c) _____ Other fastening _____
(Describe or attach sketch)

14. Design pressure[2] _____ psi at _____ °F

Drop Weight _____
Charpy Impact _____ ft-lb.
at temp. of _____ °F

Items below to be completed for all vessels where applicable.

FOR INFORMATION ONLY

15. Safety Valve Outlets: Number _____ Size _____ Location _____

16. Nozzles:

Purpose (Inlet, Outlet, Drain)	Number	Dia. or Size	Type	Material	Thickness	Reinforcement Material	How Attached

17. Inspection Openings: Manholes, No. _____ Size _____ Location _____
Handholes, No. _____ Size _____ Location _____
Threaded, No. _____ Size _____ Location _____

18. Supports: Skirt _____ (Yes or No) Lugs _____ (Number) Legs _____ (Number) Other _____ (Describe) Attached _____ (Where & How)

WOT No 01142671 43

ENERGY NORTHWEST
People · Vision · Solutions

FORM NIS-2 OWNER'S REPORT FOR REPAIR/REPLACEMENT ACTIVITY
As Required By The Provisions Of The ASME Code Section XI

1. Owner: Energy Northwest
Address: Columbia Generating Station, North Power Plant Loop, Richland, Washington, 99352
2. Plant: Columbia Generating Station
Address: Columbia Generating Station, North Power Plant Loop, Richland, Washington, 99352

Date: 06/26/2009
Sheet: 1 Of 1
Unit: Not Applicable

3. (a) Work Performed By: Energy Northwest
(b) Repair/Replacement Organization P.O. No, Job No, etc.: Energy Northwest
(c) Type Code Symbol Stamp: Not Applicable
(d) Certificate Of Authorization No.: Not Applicable
(e) Expiration Date: Not Applicable
4. Identification Of System: Control Rod Drive (CRD) System
5. (a) Applicable Construction Code: ASME Section III, Code Class 1, 1974 Edition with Winter 1975 Addenda, Code Case: Note 1
(b) Applicable Edition Of ASME Section XI Used For Repair/Replacement Activity: 2001 Edition with 2003 Addenda
(c) Applicable ASME Section XI Case(s): None
6. Identification Of Components

Name Of Component	Name Of Manufacturer	Manufacturer's Serial No	National Board No	Other I.D.	Year Built	Corrected, Removed Or Installed	ASME Code Stamped (Yes Or No) Code Class
CRD	GE	7177	N/A	N/A	1975	Removed	Yes, Code Class 1
CRD	GE	A8554	N/A	N/A	1988	Installed	Yes, Code Class 1

7. Description Of Work Performed: Replaced Control Rod Drive (CRD) assembly at Core Location 14-15. The replacement work was performed in accordance with plant procedure PPM No 10.5.7 "Control Rod Drive Removal And Replacement" as follows:

1) Removed all eight (8) existing cap screws from the CRD assembly bolted flanged connection.
2) Removed existing CRD assembly, Serial No 7177.
3) Performed VT-1 visual examination on all eight (8) new replacement cap screws. VT-1 visual examination results acceptable.
4) Installed replacement CRD assembly, Serial No A8554.
5) Installed eight (8) VT-1 visually examined new replacement cap screws for the CRD assembly bolted flanged connection.
6) Torqued the cap screws for the CRD assembly bolted flanged connection to the required torque values.
7) Performed VT-2 visual examination during pressure test on CRD assembly bolted flanged connection to confirm pressure boundary integrity of the joint. No leakage was observed during pressure test.

NOTES

1) The applicable ASME Code Cases, if any are listed on the ASME Code Data Reports.
2) The replacement CRD assembly, Serial No A8554 is certified to comply with ASME Section III, Code Class 1, 1974 Edition with Winter 1975 Addenda requirements.
3) Eight (8) new replacement cap screws, SA-540 Gr. B23, Class 4, Heat No 56624, Heat (Trace) Code No OH50.
4) VT-1 visual examination Report No 3RPV-001 for the new replacement cap screws.

WOT No 01142671 43

ENERGY NORTHWEST
People · Vision · Solutions

FORM NIS-2 OWNER'S REPORT FOR REPAIR/REPLACEMENT ACTIVITY (Back)

8 Tests Conducted: Hydrostatic ☐ **Pneumatic** ☐ **Nominal Operating Pressure** ☐ **Other** ☐ *
Exempt ☐ **Test Pressure:** 1020 Psig **Test Temperature:** 165° F

9. Remarks (Applicable Manufacturer's Data Reports to be attached): 1) See attached N-2 Code Data Report for the replacement CRD assembly, Serial No A8554. 2) * Pressure test on the CRD bolted flanged connection - Test pressure of 1020 Psig and test temperature of 165° F recorded during ASME Section XI pressure test in accordance with PPM No OSP-RPV-R801 "Reactor Pressure Vessel Leakage Test".

CERTIFICATE OF COMPLIANCE

I certify that the statements made in this Owner's Report are correct and that this conforms to the requirements of the ASME Code, Section XI.
Type Code Symbol Stamp: Not Applicable
Certificate Of Authorization No.: Not Applicable
Expiration Date: Not Applicable

Prepared By Kuldip Singh - Program Lead Engineer (PLE) ***Signed By*** Kuldip Singh - Program Lead Engineer (PLE)

Date 6/26/09 ***Date*** 6/26/09.

CERTIFICATE OF INSERVICE INSPECTION

I, the undersigned, holding a valid commission issued by the National Board of Boiler and Pressure Vessel Inspectors and the State of Washington ***and employed by*** Hartford Steam Boiler Of Connecticut of Hartford, Connecticut ***have inspected the components described in this Owner's Report during the period*** 4/1/2009 ***to*** 7/1/2009 ***and state to the best of my knowledge and belief, the Owner has performed examinations and taken corrective measures described in this Owner's Report in accordance with the requirements of the ASME Code, Section XI.***
By signing this certificate neither the Inspector nor his employer makes any warranty, expressed or implied, concerning the examinations and corrective measures described in this Owner's Report. Furthermore, neither the Inspector nor his employer shall be liable in any manner for any personal injury or property damage or a loss of any kind arising from or connected with this inspection.

Inspector's Signature ***Commissions*** 13172 WANI
National Board, State, and Endorsements

Date 7/1/2009

WOT No. 01142671 43
Del Dup Surey 6/26/09

FORM N-2 NPT CERTIFICATE HOLDERS' DATA REPORT FOR NUCLEAR PART AND APPURTENANCES*
As required by the Provision of the ASME Code Rules, Section III, Div. 1

1. Manufactured & Certified by: GE Company, 2117 Castle Hayne Rd., Wilmington, N.C. 28402
(Name and Address of NPT Certificate Holder)

(b) Manufactured for: WNP-2, RICHLAND, Wa. 99352
(Name and Address of N Certificate Holder for completed nuclear component)

2. Identification-Certificate Holders's S/N of Part: A8554 Nat'l Bd. No. N/A

(a) Constructed According to Drawing No: 919D258G003 Dwg. Prepared by D. L. Peterson

(b) Description of Part Inspected: CYLINDER TUBE & FLANGE

(c) Applicable ASME Code: Section III, Edition 1974, Addenda Date W'75 Case No. 1361-2 Class 1

3. REMARKS: Sub-assembly of Control Rod Drive for use with reactor.
(Brief description of service for which component was designed)
Hydrostatically tested at 1825 psi. min.

*Sheet 1 of 2

We certify that the statements in this report are correct and this vessel part or appurtenance as defined in the code conforms to the rules of construction of the ASME Code Section III. (The applicable Designed Specification and Stress Report are not the responsibility of the NPT Certificate Holder for parts. An NPT Certification Holder for appurtenances is responsible for furnishing a separate Design Specification and Stress Report if the appurtenance is not included in the component Design Specification and Stress Report).

DATE: 12/31, 19 88 Signed GE-NEBG-NF&CM-QA By
(NPT Certificate Holder)

Certificate Of Authorization Expires: 6/16/90 Certification of Authorization No.: NPT N-1151

CERTIFICATION OF DESIGN FOR APPURTENANCE

Design information on file at GE COMPANY, SAN JOSE, CALIFORNIA

Stress analysis report on file at GE COMPANY, SAN JOSE, CALIFORNIA
DC22A6253 Rev. 0
Design specification certified by BJORN HAABERG Prof. Eng. State CALIF. Reg. No. 15570
DC22A6254 Rev. 0.
Stress analysis report certified by EDWARD YOSHIO Prof. Eng. State CALIF. Reg. No. M018646

CERTIFICATION OF SHOP INSPECTION

I, the undersigned, holding a valid commission by the National Board of Boiler and Pressure Inspectors and/or the State or Province of NORTH CAROLINA and employed by DEPARTMENT OF LABOR of STATE OF NORTH CAROLINA have inspected the part of a pressure vessel described in this Partial Data Report on 12-31 19 88, and state that to the best of my knowledge and belief, the NPT Certificate Holder has constructed this part in accordance with the ASME Code Section III.

By signing this certificate, neither the Inspector nor his employer makes any warranty, expressed or implied, concerning the part described in the Partial Data Report. Furthermore, neither the Inspector nor his employer shall be liable in any manner for any personal injury or property damages or a loss of any kind arising from or connected with this inspection.

12-31, 19 88 NC 779, PA WC2L60, OHIO
DATE Inspector's Signature National Board, State, Province and No.

Supplemental sheets in form of lists, sketches or drawing may be used provided (1) size is 8-1/2" X 11", (2) information in 1-2 on this Data Report is included on each sheet, and (3) each sheet is numbered and number of sheets is recorded in Item 3. "REMARKS"

(10/77)

VERIFIED & ACCEPTED
1-25-89
R.I. Inspector Date

S/N

FORM N-2 (back)

Items 4-8 Incl. to be completed for single wall vessels, jackets vessels, or shells of heat exchangers.

4. Shell: Material_____ T.S._____ Nominal Thickness___in. Corrosion Allowance___in Dia.___ft.___in. Length___ft.___in.
(Kind & Spec.No) (Min.ofRange Specified)

5. Seams: Long_____ H.T.[1]_____ R.T._____ Efficiency_____%

Girth_____ H.T.[1]_____ R.T._____ No. of Courses_____

6. Heads: (a) Material_____ T.S._____ (b)Material_____ T.S._____

Location (Top Bottom, Ends)	Thickness	Crown Radius	Knuckle Radius	Elliptical Ratio	Concial Apex Angle	Hemispherical Radius	Flat Diameter	Side to Press. (conv.or conc.)
(a)_____	_____	_____	_____	_____	_____	_____	_____	_____
(b)_____	_____	_____	_____	_____	_____	_____	_____	_____

If removable, bolts used_____ Other fastening_____
(Material,Spec.No., T.S. Size Number) (Describe or attach sketch)

7. Jacket Closure:_____
(Describe as ogee and weld,bar,etc. If bar give dimensions, if bolts, describe or sketch)

8. Design Pressure[2] 1250 psi at 575 °F

Drop Weight_____
Charpy Impact_____ ft-lb
at temp. of_____ °F

Items 9 and 10 to be completed for tube sections.

9. Tube Sheets: Stationary Mat'l._____ Dia._____ Thickness___in. Attachment_____
(Kind of Spec. No.) (Subj.to Press.) (Welded, Bolted)

Floating. Material _____ Dia._____ Thickness___in. Attachment_____

10. Tubes: Material_____ O.D.___in. Thickness_____ inches or gage. Number____ Type_____
(Str. or U)

Items 11-14 incl. to be completed for inner chambers of jacketed vessels, or channels of heat exchangers

11. Shell: Material____ T.S.____ Nominal Thickness___in. Corrosion Allowance___in. Dia.___ft.___in___Length___ft.___in.
(Kind&Spec.No.) (Min.ofRange Specified)

12. Seams: Long_____ H.T.[1]_____ R.T._____ Efficiency_____%
Girth_____ H.T.[1]_____ R.T._____ No. of Courses_____

13. Heads (a) Material_____ T.S._____ (b)Material_____ T.S._____

Location (a)Top, Bottom, End	Ticnkess	Crown Radius	Knucle Radius	Elliptical Ratio	Concial Apex Angle	Hemispherical Radius	Fat Diameter	Side to Press (Conv.or Conc.)
	_____	_____	_____	_____	_____	_____	_____	_____
(b)Channel	_____	_____	_____	_____	_____	_____	_____	_____

If removable, bolts used (a)_____ (b)_____ (c)____ Other Fastening_____
(Describe or attach sketch

Drop Weight_____
Charpy Impact_____ ft-lb
at temp. of _____ °F

14. Design pressure[2]_____ psi at_____ °F

Items below to be completed for all vessels where applicable.

15. Safety Valve Outlets: Number_____ Size_____ Location_____

16. Nozzles:

Purpose (Inlet Outlet, Drain)	Number	Dia or Size	Type	Material	Thickness	Reinforcement Material	Attached
_____	_____	_____	_____	_____	_____	_____	_____
_____	_____	_____	_____	_____	_____	_____	_____

17. Inspection Openings: Manholes, No._____ Size_____ Location_____
Handles, No._____ Size_____ Location_____
Threaded, No._____ Size_____ Location_____

18. Supports: Shirt_____ Lugs_____ Legs_____ Other_____ Attached_____
(Yes or No) (Number) (Number) (Describe) (Where & How)

[1] If Postweld Heat-Treated.

[2] List other internal or external pressure with coincident temperature when applicable.

WOT No 01142671 44

ENERGY NORTHWEST
People · Vision · Solutions

FORM NIS-2 OWNER'S REPORT FOR REPAIR/REPLACEMENT ACTIVITY
As Required By The Provisions Of The ASME Code Section XI

1. Owner: Energy Northwest
Address: Columbia Generating Station, North Power Plant Loop, Richland, Washington, 99352
2. Plant: Columbia Generating Station
Address: Columbia Generating Station, North Power Plant Loop, Richland, Washington, 99352

Date: 06/26/2009
Sheet: 1 Of 1
Unit: Not Applicable

3. (a) Work Performed By: Energy Northwest
(b) Repair/Replacement Organization P.O. No, Job No, etc.: Energy Northwest
(c) Type Code Symbol Stamp: Not Applicable
(d) Certificate Of Authorization No.: Not Applicable
(e) Expiration Date: Not Applicable
4. Identification Of System: Control Rod Drive (CRD) System
5. (a) Applicable Construction Code: ASME Section III, Code Class 1, 1974 Edition with Winter 1975 Addenda, Code Case: Note 1
(b) Applicable Edition Of ASME Section XI Used For Repair/Replacement Activity: 2001 Edition with 2003 Addenda
(c) Applicable ASME Section XI Case(s): None
6. Identification Of Components

Name Of Component	Name Of Manufacturer	Manufacturer's Serial No	National Board No	Other I.D.	Year Built	Corrected, Removed Or Installed	ASME Code Stamped (Yes Or No) Code Class
CRD	GE	6200	N/A	N/A	1975	Removed	Yes, Code Class 1
CRD	GE	A8748	N/A	N/A	1988	Installed	Yes, Code Class 1

7. Description Of Work Performed: Replaced Control Rod Drive (CRD) assembly at Core Location 14-23. The replacement work was performed in accordance with plant procedure PPM No 10.5.7 "Control Rod Drive Removal And Replacement" as follows:

1) Removed all eight (8) existing cap screws from the CRD assembly bolted flanged connection.
2) Removed existing CRD assembly, Serial No 6200.
3) Performed VT-1 visual examination on all eight (8) new replacement cap screws. VT-1 visual examination results acceptable.
4) Installed replacement CRD assembly, Serial No A8748.
5) Installed eight (8) VT-1 visually examined new replacement cap screws for the CRD assembly bolted flanged connection.
6) Torqued the cap screws for the CRD assembly bolted flanged connection to the required torque values.
7) Performed VT-2 visual examination during pressure test on CRD assembly bolted flanged connection to confirm pressure boundary integrity of the joint. No leakage was observed during pressure test.

NOTES -

1) The applicable ASME Code Cases, if any are listed on the ASME Code Data Reports.
2) The replacement CRD assembly, Serial No A8748 is certified to comply with ASME Section III, Code Class 1, 1974 Edition with Winter 1975 Addenda requirements.
3) Eight (8) new replacement cap screws, SA-540 Gr. B23, Class 4, Heat No 56624, Heat (Trace) Code No OH50.
4) VT-1 visual examination Report No 3RPV-001 for the new replacement cap screws.

WOT No 01142671 44

ENERGY NORTHWEST
People · Vision · Solutions

FORM NIS-2 OWNER'S REPORT FOR REPAIR/REPLACEMENT ACTIVITY (Back)

8 Tests Conducted: Hydrostatic [ ] Pneumatic [ ] Nominal Operating Pressure [ ] Other [ ]
Exempt [ ] Test Pressure: 1020 Psig Test Temperature: 165° F

9. Remarks (Applicable Manufacturer's Data Reports to be attached): 1) See attached N-2 Code Data Report for the replacement CRD assembly, Serial No A8748. 2) * Pressure test on the CRD bolted flanged connection - Test pressure of 1020 Psig and test temperature of 165° F recorded during ASME Section XI pressure test in accordance with PPM No OSP-RPV-R801 "Reactor Pressure Vessel Leakage Test".

CERTIFICATE OF COMPLIANCE

I certify that the statements made in this Owner's Report are correct and that this conforms to the requirements of the ASME Code, Section XI.
Type Code Symbol Stamp: Not Applicable
Certificate Of Authorization No.: Not Applicable
Expiration Date: Not Applicable

Prepared By Kuldip Singh - Program Lead Engineer (PLE) Signed By Kuldip Singh - Program Lead Engineer (PLE)

Date 6/26/09 Date 6/26/09.

CERTIFICATE OF INSERVICE INSPECTION

I, the undersigned, holding a valid commission issued by the National Board of Boiler and Pressure Vessel Inspectors and the State of Washington *and employed by* Hartford Steam Boiler Of Connecticut of Hartford, Connecticut *have inspected the components described in this Owner's Report during the period* 4/1/2009 *to* 7/1/2009 *and state to the best of my knowledge and belief, the Owner has performed examinations and taken corrective measures described in this Owner's Report in accordance with the requirements of the ASME Code, Section XI.*
By signing this certificate neither the Inspector nor his employer makes any warranty, expressed or implied, concerning the examinations and corrective measures described in this Owner's Report. Furthermore, neither the Inspector nor his employer shall be liable in any manner for any personal injury or property damage or a loss of any kind arising from or connected with this inspection.

Inspector's Signature Commissions 13172 WANI
National Board, State, and Endorsements

Date 7/1/2009

WOT No. 01142671 44

Philip Singh 6/26/09

FORM N-2 NPT CERTIFICATE HOLDERS' DATA REPORT FOR NUCLEAR PART AND APPURTENANCES*
As required by the Provision of the ASME Code Rules, Section III, Div. 1

1. Manufactured & Certified by: GE Company, 2117 Castle Hayne Rd., Wilmington, N.C. 28402
(Name and Address of NPT Certificate Holder)
(b) Manufactured for: WNP-2, RICHLAND, Wa. 99352
(Name and Address of N Certificate Holder for completed nuclear component)

2. Identification-Certificate Holders's S/N of Part: A8748 Nat'l Bd. No. N/A

(a) Constructed According to Drawing No: 919D258G003 Dwg. Prepared by D. L. Peterson

(b) Description of Part Inspected: CYLINDER TUBE & FLANGE

(c) Applicable ASME Code: Section III, Edition 1974, Addenda Date W'75 Case No. 1361-2 Class 1

3. REMARKS: Sub-assembly of Control Rod Drive for use with reactor.
(Brief description of service for which component was designed)
Hydrostatically tested at 1825 psi. min.

*Sheet 1 of 2

We certify that the statements in this report are correct and this vessel part or appurtenance as defined in the code conforms to the rules of construction of the ASME Code Section III. (The applicable Designed Specification and Stress Report are not the responsibility of the NPT Certificate Holder for parts. An NPT Certification Holder for appurtenances is responsible for furnishing a separate Design Specification and Stress Report if the appurtenance is not included in the component Design Specification and Stress Report).

DATE: 12/31, 19 88 Signed GE-NEBG-NF&CM-QA By [signature]
(NPT Certificate Holder)

Certificate Of Authorization Expires: 6/16/90 Certification of Authorization No.: NPT N-1151

CERTIFICATION OF DESIGN FOR APPURTENANCE

Design information on file at GE COMPANY, SAN JOSE, CALIFORNIA

Stress analysis report on file at GE COMPANY, SAN JOSE, CALIFORNIA
DC22A6253 Rev. 0
Design specification certified by BJORN HAABERG Prof. Eng. State CALIF. Reg. No. 15570
DC22A6254 Rev. 0.
Stress analysis report certified by EDWARD YOSHIO Prof. Eng. State CALIF. Reg. No. M018646

CERTIFICATION OF SHOP INSPECTION

I, the undersigned, holding a valid commission by the National Board of Boiler and Pressure Inspectors and/or the State or Province of NORTH CAROLINA and employed by DEPARTMENT OF LABOR of STATE OF NORTH CAROLINA have inspected the part of a pressure vessel described in this Partial Data Report on 12-31- 1988, and state that to the best of my knowledge and belief, the NPT Certificate Holder has constructed this part in accordance with the ASME Code Section III.

By signing this certificate, neither the Inspector nor his employer makes any warranty, expressed or implied, concerning the part described in the Partial Data Report. Furthermore, neither the Inspector nor his employer shall be liable in any manner for any personal injury or property damages or a loss of any kind arising from or connected with this inspection.

12-31, 19 88 [signature] NC 779, PA WC2L60, OHIO
DATE Inspector's Signature National Board, State, Province and No.

*Supplemental sheets in form of lists, sketches or drawing may be used provided (1) size is 8-1/2" X 11", (2) information in 1-2 on this Data Report is included on each sheet, and (3) each sheet is numbered and number of sheets is recorded in Item 3. "REMARKS"

(10/77)

VERIFIED & ACCEPTED [signature] 12-15-89

FORM N-2 (back)

Items 4-8 Incl. to be completed for single wall vessels, jackets vessels, or shells of heat exchangers.

4. Shell: Material_____ T.S._____ Nominal Thickness___in. Corrosion Allowance____in Dia.____ft.___in. Length___ft.____in.
(Kind & Spec.No) (Min.ofRange Specified)

5. Seams: Long_____ H.T.[1]_____ R.T._____ Efficiency_____%

Girth_____ H.T.[1]_____ R.T._____ No. of Courses_____

6. Heads: (a) Material_____ T.S._____ (b)Material_____ T.S._____

Location (Top Bottom,Ends)	Thickness	Crown Radius	Knuckle Radius	Elliptical Ratio	Concial Apex Angle	Hemispherical Radius	Flat Diameter	Side to Press. (conv.or conc.)
(a)_____	_____	_____	_____	_____	_____	_____	_____	_____
(b)_____	_____	_____	_____	_____	_____	_____	_____	_____

If removable, bolts used_____ Other fastening_____
(Material,Spec.No., T.S. Size Number) (Describe or attach sketch)

7. Jacket Closure:_____
(Describe as ogee and weld,bar,etc. If bar give dimensions, if bolts, describe or shetch)

8. Design Pressure [2] 1250 psi at 575 °F Drop Weight_____ Charpy Impact_____ ft-lb at temp. of_____ °F

Items 9 and 10 to be completed for tube sections.

9. Tube Sheets: Stationary Mat'l._____ Dia._____ Thickness__in. Attachment_____
(Kind of Spec. No.) (Subj.to Press.) (Welded, Bolted)
Floating. Material _____ Dia._____ Thickness____in. Attachment_____

10. Tubes: Material_____ O.D._____in. Thickness_____ inches or gage. Number_____ Type_____
(Str. or U)

Items 11-14 incl. to be completed for inner chambers of jacketed vessels, or channels of heat exchangers

11. Shell: Material_____ T.S._____ Nominal Thickness___in. Corrosion Allowance___in. Dia.___ft.___in___Length___ft.___in.
(Kind&Spec.No.) (Min.ofRange Specified)

12. Seams: Long_____ H.T.[1]_____ R.T._____ Efficiency_____%
Girth_____ H.T.[1]_____ R.T._____ No. of Courses_____

13. Heads (a) Material_____ T.S._____ (b)Material_____ T.S._____

Location	Ticnkess	Crown Radius	Knucle Radius	Elliptical Ratio	Concial Apex Angle	Hemispherical Radius	Fat Diameter	Side to Press (Conv.or Conc.)
(a)Top, Bottom, End	_____	_____	_____	_____	_____	_____	_____	_____
(b)Channel	_____	_____	_____	_____	_____	_____	_____	_____

If removable, bolts used (a)_____ (b)_____ (c)_____ Other Fastening_____
(Describe or attach sketch

14. Design pressure[2]_____ psi at_____ °F Drop Weight_____, Charpy Impact_____ ft-lb at temp. of _____ °F

Items below to be completed for all vessels where applicable.

15. Safety Valve Outlets: Number_____ Size_____ Location_____

16. Nozzles:

Purpose (Inlet Outlet, Drain)	Number	Dia or Size	Type	Material	Thickness	Reinforcement Material	Attached
_____	_____	_____	_____	_____	_____	_____	_____
_____	_____	_____	_____	_____	_____	_____	_____

17. Inspection Openings: Manholes, No._____ Size_____ Location_____
Handles, No._____ Size_____ Location_____
Threaded, No._____ Size_____ Location_____

18. Supports: Shirt_____ Lugs_____ Legs_____ Other_____ Attached_____
(Yes or No) (Number) (Number) (Describe) (Where & How)

[1] If Postweld Heat-Treated.

[2] List other internal or external pressure with conincident temperature when applicalbe.

WOT No 01142671 45

ENERGY NORTHWEST
People · Vision · Solutions

FORM NIS-2 OWNER'S REPORT FOR REPAIR/REPLACEMENT ACTIVITY
As Required By The Provisions Of The ASME Code Section XI

1. Owner: Energy Northwest
Address: Columbia Generating Station, North Power Plant Loop, Richland, Washington, 99352
2. Plant: Columbia Generating Station
Address: Columbia Generating Station, North Power Plant Loop, Richland, Washington, 99352

Date: 06/26/2009
Sheet: 1 Of 1
Unit: Not Applicable

3. (a) Work Performed By: Energy Northwest
(b) Repair/Replacement Organization P.O. No, Job No, etc.: Energy Northwest
(c) Type Code Symbol Stamp: Not Applicable
(d) Certificate Of Authorization No.: Not Applicable
(e) Expiration Date: Not Applicable
4. Identification Of System: Control Rod Drive (CRD) System
5. (a) Applicable Construction Code: ASME Section III, Code Class 1, 1971 Edition with no Addenda, Code Case: Note 1
(b) Applicable Edition Of ASME Section XI Used For Repair/Replacement Activity: 2001 Edition with 2003 Addenda
(c) Applicable ASME Section XI Case(s): None
6. Identification Of Components

Name Of Component	Name Of Manufacturer	Manufacturer's Serial No	National Board No	Other I.D.	Year Built	Corrected, Removed Or Installed	ASME Code Stamped (Yes Or No) Code Class
CRD	GE	7234	N/A	N/A	1975	Removed	Yes, Code Class 1
CRD	GE	6246	N/A	N/A	1975	Installed	Yes, Code Class 1

7. Description Of Work Performed: Replaced Control Rod Drive (CRD) assembly at Core Location 34-07. The replacement work was performed in accordance with plant procedure PPM No 10.5.7 "Control Rod Drive Removal And Replacement" as follows:

1) Removed all eight (8) existing cap screws from the CRD assembly bolted flanged connection.
2) Removed existing CRD assembly, Serial No 7234.
3) Performed VT-1 visual examination on all eight (8) new replacement cap screws. VT-1 visual examination results acceptable.
4) Installed replacement CRD assembly, Serial No 6246.
5) Installed eight (8) VT-1 visually examined new replacement cap screws for the CRD assembly bolted flanged connection.
6) Torqued the cap screws for the CRD assembly bolted flanged connection to the required torque values.
7) Performed VT-2 visual examination during pressure test on CRD assembly bolted flanged connection to confirm pressure boundary integrity of the joint. No leakage was observed during pressure test.

NOTES -

1) The applicable ASME Code Cases, if any are listed on the ASME Code Data Reports.
2) The replacement CRD assembly, Serial No 6246 is certified to comply with ASME Section III, Code Class 1, 1971 Edition with no Addenda requirements.
3) Eight (8) new replacement cap screws, SA-540 Gr. B23, Class 4, Heat No 56624, Heat (Trace) Code No OH50.
4) VT-1 visual examination Report No 3RPV-001 for the new replacement cap screws.

WOT No 01142671 45

ENERGY NORTHWEST
People · Vision · Solutions

FORM NIS-2 OWNER'S REPORT FOR REPAIR/REPLACEMENT ACTIVITY (Back)

8 Tests Conducted: Hydrostatic ☐ Pneumatic ☐ Nominal Operating Pressure ☐ Other ☐
Exempt ☐ **Test Pressure:** 1020 Psig **Test Temperature:** 165° F

9. Remarks (Applicable Manufacturer's Data Reports to be attached): 1) See attached N-2 Code Data Report for the replacement CRD assembly, Serial No 6246. 2) * Pressure test on the CRD bolted flanged connection - Test pressure of 1020 Psig and test temperature of 165° F recorded during ASME Section XI pressure test in accordance with PPM No OSP-RPV-R801 "Reactor Pressure Vessel Leakage Test".

CERTIFICATE OF COMPLIANCE

I certify that the statements made in this Owner's Report are correct and that this conforms to the requirements of the ASME Code, Section XI.
Type Code Symbol Stamp: Not Applicable
Certificate Of Authorization No.: Not Applicable
Expiration Date: Not Applicable

Prepared By Kuldip Singh - Program Lead Engineer (PLE) **Signed By** Kuldip Singh - Program Lead Engineer (PLE)

Date 6/26/09 **Date** 6/26/09

CERTIFICATE OF INSERVICE INSPECTION

I, the undersigned, holding a valid commission issued by the National Board of Boiler and Pressure Vessel Inspectors and the State of Washington *and employed by* Hartford Steam Boiler Of Connecticut of Hartford, Connecticut *have inspected the components described in this Owner's Report during the period* 4/1/2009 *to* 7/1/2009 *and state to the best of my knowledge and belief, the Owner has performed examinations and taken corrective measures described in this Owner's Report in accordance with the requirements of the ASME Code, Section XI.*
By signing this certificate neither the Inspector nor his employer makes any warranty, expressed or implied, concerning the examinations and corrective measures described in this Owner's Report. Furthermore, neither the Inspector nor his employer shall be liable in any manner for any personal injury or property damage or a loss of any kind arising from or connected with this inspection.

Inspector's Signature **Commissions** 13172 WANI
National Board, State, and Endorsements

Date 7/1/2009

WOT No. 01142671 45

FORM N-2 MANUFACTURERS DATA REPORT FOR NUCLEAR PART AND APPURTENANCES

As required by the Provisions of the ASME Code Rules

1. (a) Manufactured by General Electric Company, Castle Hayne Rd., Wilmington, N. C. 6/26/09
(Name and address of Manufacturer of part)

(b) Manufactured for General Electric Company, San Jose, California
(Name and address of Manufacturer of completed nuclear component)

2. Identification-Manufacturer's Serial No. of Part 6246 Nat'l Bd. No.

(a) Constructed According to Drawing No. 761E387G2 Drawing Prepared by D. L. Peterson

(b) Description of Part Inspected Control Rod Drive, Model #7RDB144 C1

(c) Applicable ASME Code: Section III, Edition 1971, Addenda date None, Case No. 1361-1 Class 1

3. Remarks: Standard part for use with Reactor. Hydrostatically tested at 1820 psi minimum.
(Brief description of service for which component was designed)

We certify that the statements made in this report are correct and this vessel part or appurtenance as defined in the Code conforms to the rules of construction of the ASME Code Section III.
(The applicable Design Specification and Stress Report are not the responsibility of the part Manufacturer. An appurtenance Manufacturer is responsible for furnishing a separate Design Specification and Stress Report if the appurtenance is not included in the component Design Specification and Stress Report.)

Date July 31 19 75 Signed GE, BWRSD - REM (Manufacturer) By

Certificate of Authorization Expires June 20, 1978 Certificate of Authorization No. NPT - 462

CERTIFICATION OF DESIGN FOR APPURTENANCE (when applicable)

Design information on file at General Electric Co., BWRSD-REM, Castle Hayne Rd., Wilmington

Stress analysis report on file at General Electric Co., BWRSD-REM, Castle Hayne Rd., Wilmington

Design specifications certified by Vernon W. Pence Prof. Eng. State Calif. Reg. No. 14488

Stress analysis report certified by Vernon W. Pence Prof. Eng. State Calif. Reg. No. 14488

CERTIFICATE OF SHOP INSPECTION

I, the undersigned, holding a valid commission issued by the National Board of Boiler and Pressure Vessel Inspectors and/or the State or Province of North Carolina and employed by Department of Labor of State of North Carolina have inspected the part of a pressure vessel described in this Manufacturer's Partial Data Report on July 31 1975, and state that to the best of my knowledge and belief, the Manufacturer has constructed this part in accordance with the ASME Code Section III.

By signing this certificate, neither the Inspector nor his employer makes any warranty, expressed or implied, concerning the part described in this Manufacturer's Partial Data Report. Furthermore, neither the Inspector nor his employer shall be liable in any manner for any personal injury or property damage or a loss of any kind arising from or connected with this Inspection.

Date July 31 19 75

E. R. Sherrill
Inspector's Signature

Commissions NC 723, PA. NC 1766, Ohio
National Board, State, Province and No.

761E387G2
6246

FORM N-2 (back)

Items 4–8 incl. to be completed for single wall vessels, jackets of jacketed vessels, or shells of heat exchangers.

4. Shell: Material ____ (Kind & Spec. No.) ____ T.S. ____ (Min. of Range Specified) Nominal Thickness ____ in. Corrosion Allowance ____ in. Dia. ____ ft. ____ in. Length ____ ft. ____ in.

5. Seams: Long ____ H.T.[1] ____ R.T. ____ Efficiency ____ %

Girth ____ H.T.[1] ____ R.T. ____ No. of Courses ____

6. Heads: (a) Material ____ T.S. ____ (b) Material ____ T.S. ____

Location (Top, bottom, ends)	Thickness	Crown Radius	Knuckle Radius	Elliptical Ratio	Conical Apex Angle	Hemispherical Radius	Flat Diameter	Side to Press. (Conv. or Conc.)
(a)								
(b)								

If removable, bolts used ____ (Material, Spec. No., T.S., Size, Number) Other fastening ____ (Describe or attach sketch)

7. Jacket Closure: ____ (Describe as ogee and weld, bar, etc. If bar give dimensions, if bolted, describe or sketch)

8. Design pressure[2] 1250 psi at 575 °F Drop Weight ____ Charpy Impact ____ ft-lb at temp. of ____ °F

Items 9 and 10 to be completed for tube sections

9. Tube Sheets: Stationary. Material ____ (Kind & Spec. No.) Dia. ____ (Subject to pressure) Thickness ____ in. Attachment ____ (Welded, Bolted)

Floating. Material ____ Dia. ____ Thickness ____ in. Attachment ____

10. Tubes: Material ____ O.D. ____ in. Thickness ____ inches or gage. Number ____ Type ____ (Str. or U)

Items 11–14 incl. to be completed for inner chambers of jacketed vessels, or channels of heat exchangers.

11. Shell: Material ____ (Kind & Spec. No.) T.S. ____ (Min. of Range Specified) Nominal Thickness ____ in. Corrosion Allowance ____ in. Dia. ____ ft. ____ in. Length ____ ft. ____ in.

12. Seams: Long ____ H.T.[1] ____ R.T. ____ Efficiency ____ %

Girth ____ H.T.[1] ____ R.T. ____ No. of Courses ____

13. Heads (a) Material ____ T.S. ____ (b) Material ____ T.S. ____

Location	Thickness	Crown Radius	Knuckle Radius	Elliptical Ratio	Conical Apex Angle	Hemispherical Radius	Flat Diameter	Side to Press. (Conv. or Conc.)
(a) Top, bottom, ends								
(b) Channel								

If removable, bolts used (a) ____ (b) ____ (c) ____ Other fastening ____ (Describe or attach sketch)

14. Design pressure[2] ____ psi at ____ °F Drop Weight ____ Charpy Impact ____ ft-lb at temp. of ____ °F

Items below to be completed for all vessels where applicable.

15. Safety Valve Outlets: Number ____ Size ____ Location ____

16. Nozzles:

Purpose (Inlet, Outlet, Drain)	Number	Dia. or Size	Type	Material	Thickness	Reinforcement Material	How Attached

17. Inspection Openings: Manholes, No. ____ Size ____ Location ____
Handholes, No. ____ Size ____ Location ____
Threaded, No. ____ Size ____ Location ____

18. Supports: Skirt ____ (Yes or No) Lugs ____ (Number) Legs ____ (Number) Other ____ (Describe) Attached ____ (Where & How)

[1] Post Weld Heat Treated

WOT No 01142671 46

ENERGY NORTHWEST
People · Vision · Solutions

FORM NIS-2 OWNER'S REPORT FOR REPAIR/REPLACEMENT ACTIVITY
As Required By The Provisions Of The ASME Code Section XI

1. Owner: Energy Northwest
Address: Columbia Generating Station, North Power Plant Loop, Richland, Washington, 99352
2. Plant: Columbia Generating Station
Address: Columbia Generating Station, North Power Plant Loop, Richland, Washington, 99352

Date: 06/26/2009
Sheet: 1 Of 1
Unit: Not Applicable

3. (a) Work Performed By: Energy Northwest
(b) Repair/Replacement Organization P.O. No, Job No, etc.: Energy Northwest
(c) Type Code Symbol Stamp: Not Applicable
(d) Certificate Of Authorization No.: Not Applicable
(e) Expiration Date: Not Applicable
4. Identification Of System: Control Rod Drive (CRD) System
5. (a) Applicable Construction Code: ASME Section III, Code Class 1, 1974 Edition with Winter 1975 Addenda, Code Case: Note 1
(b) Applicable Edition Of ASME Section XI Used For Repair/Replacement Activity: 2001 Edition with 2003 Addenda
(c) Applicable ASME Section XI Case(s): None
6. Identification Of Components

Name Of Component	Name Of Manufacturer	Manufacturer's Serial No	National Board No	Other I.D.	Year Built	Corrected, Removed Or Installed	ASME Code Stamped (Yes Or No) Code Class
CRD	GE	A8900	N/A	N/A	1975	Removed	Yes, Code Class 1
CRD	GE	A5697	N/A	N/A	1984	Installed	Yes, Code Class 1

7. Description Of Work Performed: Replaced Control Rod Drive (CRD) assembly at Core Location 34-15. The replacement work was performed in accordance with plant procedure PPM No 10.5.7 "Control Rod Drive Removal And Replacement" as follows:

1) Removed all eight (8) existing cap screws from the CRD assembly bolted flanged connection.
2) Removed existing CRD assembly, Serial No A8900.
3) Performed VT-1 visual examination on all eight (8) new replacement cap screws. VT-1 visual examination results acceptable.
4) Installed replacement CRD assembly, Serial No A5697.
5) Installed eight (8) VT-1 visually examined new replacement cap screws for the CRD assembly bolted flanged connection.
6) Torqued the cap screws for the CRD assembly bolted flanged connection to the required torque values.
7) Performed VT-2 visual examination during pressure test on CRD assembly bolted flanged connection to confirm pressure boundary integrity of the joint. No leakage was observed during pressure test.

NOTES

1) The applicable ASME Code Cases, if any are listed on the ASME Code Data Reports.
2) The replacement CRD assembly, Serial No A5697 is certified to comply with ASME Section III, Code Class 1, 1974 Edition with Winter 1975 Addenda requirements.
3) Eight (8) new replacement cap screws, SA-540 Gr. B23, Class 4, Heat No 56624, Heat (Trace) Code No OH50.
4) VT-1 visual examination Report No 3RPV-001 for the new replacement cap screws.

WOT No 01142671 46

ENERGY NORTHWEST
People·Vision·Solutions

FORM NIS-2 OWNER'S REPORT FOR REPAIR/REPLACEMENT ACTIVITY (Back)

8 Tests Conducted: Hydrostatic ☐ **Pneumatic** ☐ **Nominal Operating Pressure** ☐ **Other** ☐
Exempt ☐ **Test Pressure:** 1020 Psig **Test Temperature:** 165° F

9. Remarks (Applicable Manufacturer's Data Reports to be attached): 1) See attached N-2 Code Data Report for the replacement CRD assembly, Serial No A5697. 2) * Pressure test on the CRD bolted flanged connection - Test pressure of 1020 Psig and test temperature of 165° F recorded during ASME Section XI pressure test in accordance with PPM No OSP-RPV-R801 "Reactor Pressure Vessel Leakage Test".

CERTIFICATE OF COMPLIANCE

I certify that the statements made in this Owner's Report are correct and that this conforms to the requirements of the ASME Code, Section XI.
Type Code Symbol Stamp: Not Applicable
Certificate Of Authorization No.: Not Applicable
Expiration Date: Not Applicable

Prepared By Kuldip Singh ***Signed By*** Kuldip Singh
Kuldip Singh - Program Lead Engineer (PLE) Kuldip Singh - Program Lead Engineer (PLE)
Date 6/26/09 ***Date*** 6/26/09.

CERTIFICATE OF INSERVICE INSPECTION

I, the undersigned, holding a valid commission issued by the National Board of Boiler and Pressure Vessel Inspectors and the State of Washington ***and employed by*** Hartford Steam Boiler Of Connecticut of Hartford, Connecticut ***have inspected the components described in this Owner's Report during the period*** 4/1/2009 ***to*** 7/1/2009 ***and state to the best of my knowledge and belief, the Owner has performed examinations and taken corrective measures described in this Owner's Report in accordance with the requirements of the ASME Code, Section XI.***
By signing this certificate neither the Inspector nor his employer makes any warranty, expressed or implied, concerning the examinations and corrective measures described in this Owner's Report. Furthermore, neither the Inspector nor his employer shall be liable in any manner for any personal injury or property damage or a loss of any kind arising from or connected with this inspection.

Inspector's Signature ***Commissions*** 13172 WANI
National Board, State, and Endorsements

Date 7/1/2009

WO7 No. 0114267146

FORM N-3 NPT CERTIFICATE HOLDERS' DATA REPORT FOR NUCLEAR PART AND APPURTENANCES*

As required by the Provision of the ASME Code Rules, Section III, Div. 1

CORRECTED COPY

1. (a) Manufactured by General Electric Co., Castle Hayne Rd., Wilmington, N.C. 6/26/09.
(Name and address of NPT Certificate Holder)

(b) Manufactured for ~~BROOK~~ HANFORD
(Name and address of N Certificate Holder for completed nuclear component)

2. Identification-Certificate Holder's Serial No. of Part A5697 Nat'l Bd. No.

(a) Constructed According to Drawing No. 919D258G003 Drawing Prepared by D. L. Paterson

(b) Description of Part Inspected Cylinder Tube and Flange

(c) Applicable ASME Code: Section III, Edition 1974, Addenda date W'75, Case No. 1361-2 Class 1

3. Remarks: Standard part for use with reactor
(Brief description of service for which component was designed)

Hydrostatically tested at 1825 psi.

CORRECTED COPY: ITEM 1. (b) ADDED SITE LOCATION

* Number of sheets - 2

We certify that the statements made in this report are correct and this vessel part or appurtenance as defined in the Code forms to the rules of construction of the ASME Code Section III.
(The applicable Design Specification and Stress Report are not the responsibility of the NPT Certificate Holder for parts. An NPT Certificate Holder for appurtenances is responsible for furnishing a separate Design Specification and Stress Report if the appurtenance included in the component Design Specification and Stress Report.)

Date 6/13 19 84 Signed GE-NEPD-WMD-FM By J. E. Strodemann
(NPT Certificate Holder)

Certificate of Authorization Expires June 16, 1984 Certificate of Authorization No. N-1151

CERTIFICATION OF DESIGN FOR APPURTENANCE (when applicable)

Design information on file at GENERAL ELECTRIC CO., SAN JOSE, CALIF.

Stress analysis report on file at GENERAL ELECTRIC CO., SAN JOSE, CALIF.

Design specifications certified by Vernon W. Pence Prof. Eng. State Calif. Reg. No. 144

Stress analysis report certified by Vernon W. Pence Prof. Eng. State Calif. Reg. No. 144

CERTIFICATE OF SHOP INSPECTION

I, the undersigned, holding a valid commission issued by the National Board of Boiler and Pressure Vessel Inspectors and/or the State or Province of North Carolina and employed by Dept of Labor of State of North Carolina have inspected the part of a pressure vessel described in this Partial Data Report on 6/18 1981, and state that to the best of my knowledge and belief, the NPT Certificate Holder has constructed this part in accordance with the ASME Code Section III.

By signing this certificate, neither the inspector nor his employer makes any warranty, expressed or implied, concerning the part described in this Partial Data Report. Furthermore, neither the inspector nor his employer shall be liable in any manner for any personal injury or property damage or a loss of any kind arising from or connected with this inspection.

Date 6/13 19 84

E B Sherrill
Inspector's Signature

Commissions NC 723, PA. WC1766, OHIO
National Board, State, Province and No.

*Supplemental sheets in form of lists, sketches or drawings may be used provided (1) size is 8½" x 11", (2) information in items 1 and 2 on this

FORM N-2 (back)

Items 4–8 incl. to be completed for single wall vessels, jackets of jacketed vessels, or shells of heat exchangers.

4. Shell: Material _____ (Kind & Spec. No.) T.S. _____ (Min. of Range Specified) Nominal Thickness ____ in. Corrosion Allowance ____ in. Dia. ____ ft. ____ in. Length ____ ft. ____

5. Seams: Long _____ H.T.[1] _____ R.T. _____ Efficiency _____ %

Girth _____ H.T.[1] _____ R.T. _____ No. of Courses _____

6. Heads: (a) Material _____ T.S. _____ (b) Material _____ T.S. _____

Location (Top, bottom, ends)	Thickness	Crown Radius	Knuckle Radius	Elliptical Ratio	Conical Apex Angle	Hemispherical Radius	Flat Diameter	Side to Press. (Conv. or Conc.)
(a)								
(b)								

If removable, bolts used _____ (Material, Spec. No., T.S., Size, Number) Other fastening _____ (Describe or attach sketch)

7. Jacket Closure: _____ (Describe as edge and weld, bar, etc. If bar give dimensions, if bolted, describe or sketch)

8. Design pressure[3] 1250 psi = 575 °F

Drop Weight _____
Charpy Impact _____ ft-lb
at temp. of _____ °F

Items 9 and 10 to be completed for tube sections

9. Tube Sheets: Stationary. Material _____ (Kind & Spec. No.) _____ (Subject to pressure) Dia. _____ Thickness ____ in. Attachment _____ (Welded, Bolted)

Floating. Material _____ Dia. _____ Thickness ____ in. Attachment _____

10. Tubes: Material _____ O.D. ____ in. Thickness _____ inches or gage. Number _____ Type _____ (Str. or U)

Items 11–14 incl. to be completed for inner chambers of jacketed vessels, or channels of heat exchangers.

11. Shell: Material _____ (Kind & Spec. No.) T.S. _____ (Min. of Range Specified) Nominal Thickness ____ in. Corrosion Allowance ____ in. Dia. ____ ft. ____ in. Length ____ ft. ____

12. Seams: Long _____ H.T.[1] _____ R.T. _____ Efficiency _____ %

Girth _____ H.T.[1] _____ R.T. _____ No. of Courses _____

13. Heads: (a) Material _____ T.S. _____ (b) Material _____ T.S. _____

Location	Thickness	Crown Radius	Knuckle Radius	Elliptical Ratio	Conical Apex Angle	Hemispherical Radius	Flat Diameter	Side to Press. (Conv. or Conc.)
(a) Top, bottom, ends								
(b) Channel								

If removable, bolts used (a) _____ (b) _____ (c) _____ Other fastening _____ (Describe or attach sketch)

14. Design pressure[3] _____ psi at _____ °F

Drop Weight _____
Charpy Impact _____ ft-lb
at temp. of _____ °F

Items below to be completed for all vessels where applicable.

15. Safety Valve Outlets: Number _____ Size _____ Location _____

16. Nozzles:

Purpose (Inlet, Outlet, Drain)	Number	Dia. or Size	Type	Material	Thickness	Reinforcement Material	How Attached

17. Inspection Openings: Manholes, No. _____ Size _____ Location _____
Handholes, No. _____ Size _____ Location _____
Threaded, No. _____ Size _____ Location _____

18. Supports: Skirt _____ (Yes or No) Legs _____ (Number) Lugs _____ (Number) Other _____ (Describe) Anchored _____ (Yes & No)

[1] or Seamless Hot-Treated.

[3] Pressure temperature when applicable.

WOT NO. 01142671 46

FORM N-3 NPT CERTIFICATE HOLDERS' DATA REPORT FOR NUCLEAR PARTS AND APPURTENANCES*

As required by the Provision of the ASME Code Rules, Section III, Div. 1

CORRECTED COPY

1. (a) Manufactured by General Electric Co., Castle Hayne Rd., Wilmington N.C. 6/26/05.
(Name and address of NPT Certificate Holder)

(b) Manufactured for ~~STOCK~~ HANFORD
(Name and address of N Certificate Holder for completed nuclear component)

2. Identification-Certificate Holder's Serial No. of Part A5697 Nat'l Bd. No.

(a) Constructed According to Drawing No. 919D258G003 Drawing Prepared by D. L. Paterson

(b) Description of Part Inspected Cylinder Tube and Flange

(c) Applicable ASME Code: Section III, Edition 1974, Addenda date W'75, Case No. 1361-2 Class 1

3. Remarks: Standard part for use with reactor. Hydrostatically tested at 1825 psi.
(Brief description of service for which component was designed)

* Number of sheets - 2

CORRECTED COPY: ITEM 1.(b) ADDED SITE LOCATION

1. Cap 167A2343P1
(167A2343)
SA182-F304
3/8 thick x 1 1/16 OD

2. Indicator Tube 104B1336P1
SA312-TP316
3/4 sch 40-seamless pipe
0.113 wall thickness
1.065 max. dia.

3. Plug 159A1176P1
SA182-F304
1/4 thick x 0.812 OD

4. Flange 919D610P1 (719E474)
SA182-F304
3.37 thick x 9 5/8 OD
neck 1 1/16 thick x 5.0 OD
2.875 ID

5. Head 129B3539P1
SA182-F304
7/8 thick x 2.875 Dia.

6. Ring Flange 114B5122P2
SA182-F304
1" thick x 5.0 OD x 1.75 ID

7. Cap Screw 117C4516P2
SA193-B8
6 ea. 1/2 dia. on 4 1/8 bolt circle

8. Plug 175A7961P1
SA182-F304
0.38 thick x 1.307 dia.

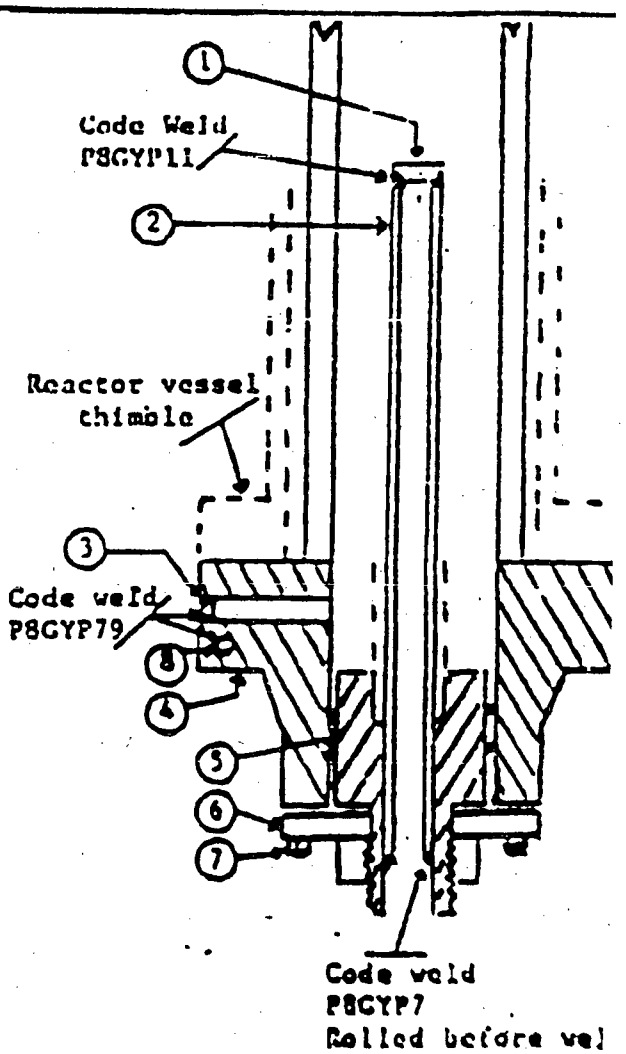

2 2 9 2 U 5 1 4

WOT No 01142671 47

ENERGY NORTHWEST
People · Vision · Solutions

FORM NIS-2 OWNER'S REPORT FOR REPAIR/REPLACEMENT ACTIVITY
As Required By The Provisions Of The ASME Code Section XI

1. Owner: Energy Northwest
Address: Columbia Generating Station, North Power Plant Loop, Richland, Washington, 99352
2. Plant: Columbia Generating Station
Address: Columbia Generating Station, North Power Plant Loop, Richland, Washington, 99352

Date: 06/26/2009
Sheet: 1 Of 1
Unit: Not Applicable

3. (a) Work Performed By: Energy Northwest
(b) Repair/Replacement Organization P.O. No, Job No, etc.: Energy Northwest
(c) Type Code Symbol Stamp: Not Applicable
(d) Certificate Of Authorization No.: Not Applicable
(e) Expiration Date: Not Applicable
4. Identification Of System: Control Rod Drive (CRD) System
5. (a) Applicable Construction Code: ASME Section III, Code Class 1, 1971 Edition with no Addenda, Code Case: Note 1
(b) Applicable Edition Of ASME Section XI Used For Repair/Replacement Activity: 2001 Edition with 2003 Addenda
(c) Applicable ASME Section XI Case(s): None
6. Identification Of Components

Name Of Component	Name Of Manufacturer	Manufacturer's Serial No	National Board No	Other I.D.	Year Built	Corrected, Removed Or Installed	ASME Code Stamped (Yes Or No) Code Class
CRD	GE	A9154	N/A	N/A	1991	Removed	Yes, Code Class 1
CRD	GE	7326	N/A	N/A	1975	Installed	Yes, Code Class 1

7. Description Of Work Performed: Replaced Control Rod Drive (CRD) assembly at Core Location 34-39. The replacement work was performed in accordance with plant procedure PPM No 10.5.7 "Control Rod Drive Removal And Replacement" as follows:

1) Removed all eight (8) existing cap screws from the CRD assembly bolted flanged connection.
2) Removed existing CRD assembly, Serial No A9154.
3) Performed VT-1 visual examination on all eight (8) new replacement cap screws. VT-1 visual examination results acceptable.
4) Installed replacement CRD assembly, Serial No 7326.
5) Installed eight (8) VT-1 visually examined new replacement cap screws for the CRD assembly bolted flanged connection.
6) Torqued the cap screws for the CRD assembly bolted flanged connection to the required torque values.
7) Performed VT-2 visual examination during pressure test on CRD assembly bolted flanged connection to confirm pressure boundary integrity of the joint. No leakage was observed during pressure test.

NOTES

1) The applicable ASME Code Cases, if any are listed on the ASME Code Data Reports.
2) The replacement CRD assembly, Serial No 7326 is certified to comply with ASME Section III, Code Class 1, 1971 Edition with no Addenda requirements.
3) Eight (8) new replacement cap screws, SA-540 Gr. B23, Class 4, Heat No 56624, Heat (Trace) Code No OH50.
4) VT-1 visual examination Report No 3RPV-001 for the new replacement cap screws.

WOT No 01142671 47

ENERGY NORTHWEST
People · Vision · Solutions

FORM NIS-2 OWNER'S REPORT FOR REPAIR/REPLACEMENT ACTIVITY (Back)

8 Tests Conducted: Hydrostatic [ ] Pneumatic [ ] Nominal Operating Pressure [ ] Other [ ]
Exempt [ ] **Test Pressure:** 1020 Psig **Test Temperature:** 165° F

9. Remarks (Applicable Manufacturer's Data Reports to be attached): 1) See attached N-2 Code Data Report for the replacement CRD assembly, Serial No 7326. 2) * Pressure test on the CRD bolted flanged connection - Test pressure of 1020 Psig and test temperature of 165° F recorded during ASME Section XI pressure test in accordance with PPM No OSP-RPV-R801 "Reactor Pressure Vessel Leakage Test".

CERTIFICATE OF COMPLIANCE

I certify that the statements made in this Owner's Report are correct and that this conforms to the requirements of the ASME Code, Section XI.
Type Code Symbol Stamp: Not Applicable
Certificate Of Authorization No.: Not Applicable
Expiration Date: Not Applicable

Prepared By Kuldip Singh - Program Lead Engineer (PLE) **Signed By** Kuldip Singh - Program Lead Engineer (PLE)

Date 6/26/09 **Date** 6/26/09.

CERTIFICATE OF INSERVICE INSPECTION

I, the undersigned, holding a valid commission issued by the National Board of Boiler and Pressure Vessel Inspectors and the State of Washington *and employed by* Hartford Steam Boiler Of Connecticut of Hartford, Connecticut *have inspected the components described in this Owner's Report during the period* 4/1/2009 *to* 7/1/2009 *and state to the best of my knowledge and belief, the Owner has performed examinations and taken corrective measures described in this Owner's Report in accordance with the requirements of the ASME Code, Section XI.*
By signing this certificate neither the Inspector nor his employer makes any warranty, expressed or implied, concerning the examinations and corrective measures described in this Owner's Report. Furthermore, neither the Inspector nor his employer shall be liable in any manner for any personal injury or property damage or a loss of any kind arising from or connected with this inspection.

Inspector's Signature **Commissions** 13172 WANI
National Board, State, and Endorsements

Date 7/1/2009

WOT No. 01142671 47

FORM N-2 MANUFACTURERS DATA REPORT FOR NUCLEAR PART AND APPURTENANCES

As required by the Provisions of the ASME Code Rules

1. (a) Manufactured by General Electric Company, Castle Hayne Rd., Wilmington, N. C. 6/26/09
(Name and address of Manufacturer of part)

(b) Manufactured for General Electric Company, San Jose, California
(Name and address of Manufacturer of completed nuclear component)

2. Identification-Manufacturer's Serial No. of Part 7326 Nat'l Bd. No.

(a) Constructed According to Drawing No. 761E387G2 Drawing Prepared by D. L. Peterson

(b) Description of Part Inspected Control Rod Drive, Model #7RDB144 C1

(c) Applicable ASME Code: Section III, Edition 1971, Addenda date None, Case No. 1361-1 Class 1

3. Remarks: Standard part for use with Reactor. Hydrostatically tested at 1820 psi minimum.
(Brief description of service for which component was designed)

FOR INFORMATION ONLY

We certify that the statements made in this report are correct and this vessel part or appurtenance as defined in the Code conforms to the rules of construction of the ASME Code Section III.
(The applicable Design Specification and Stress Report are not the responsibility of the part Manufacturer. An appurtenance Manufacturer is responsible for furnishing a separate Design Specification and Stress Report if the appurtenance is not included in the component Design Specification and Stress Report.)

Date July 31 1975 Signed GE, BWRSD - REM (Manufacturer) By

Certificate of Authorization Expires June 20, 1978 Certificate of Authorization No. NPT - 462

CERTIFICATION OF DESIGN FOR APPURTENANCE (when applicable)

Design information on file at General Electric Co., BWRSD-REM, Castle Hayne Rd., Wilmington

Stress analysis report on file at General Electric Co., BWRSD-REM, Castle Hayne Rd., Wilmington

Design specifications certified by Vernon W. Pence Prof. Eng. State Calif. Reg. No. 14488

Stress analysis report certified by Vernon W. Pence Prof. Eng. State Calif. Reg. No. 14488

CERTIFICATE OF SHOP INSPECTION

I, the undersigned, holding a valid commission issued by the National Board of Boiler and Pressure Vessel Inspectors and/or the State or Province of North Carolina and employed by Department of Labor of State of North Carolina have inspected the part of a pressure vessel described in this Manufacturer's Partial Data Report on July 31 1975, and state that to the best of my knowledge and belief, the Manufacturer has constructed this part in accordance with the ASME Code Section III.

By signing this certificate, neither the Inspector nor his employer makes any warranty, expressed or implied, concerning the part described in this Manufacturer's Partial Data Report. Furthermore, neither the Inspector nor his employer shall be liable in any manner for any personal injury or property damage or a loss of any kind arising from or connected with this Inspection.

Date July 31 1975

Inspector's Signature

Commissions NC 723, PA. NC 1766, Ohio
National Board, State, Province and No.

ZX00367751

Items 4–8 incl. to be completed for single wall vessels, jackets of jacketed vessels, or shells of heat exchangers.

4. Shell: Material ____ (Kind & Spec. No.) T.S. ____ (Min. of Range Specified) Nominal Thickness ____ in. Corrosion Allowance ____ in. Dia. ____ ft. ____ in. Length ____ ft. ____ in.

5. Seams: Long ____ H.T.[1] ____ R.T. ____ Efficiency ____ %

Girth ____ H.T.[1] ____ R.T. ____ No. of Courses ____

6. Heads: (a) Material ____ T.S. ____ (b) Material ____ T.S. ____

Location (Top, bottom, ends)	Thickness	Crown Radius	Knuckle Radius	Elliptical Ratio	Conical Apex Angle	Hemispherical Radius	Flat Diameter	Side to Press. (Conv. or Conc.)
(a)								
(b)								

If removable, bolts used ____ (Material, Spec. No., T.S., Size, Number) Other fastening ____ (Describe or attach sketch)

7. Jacket Closure: ____ (Describe as ogee and weld, bar, etc. If bar give dimensions, if bolted, describe or sketch)

8. Design pressure[2] 1250 psi at 575 °F

Drop Weight ____
Charpy Impact ____ ft-lb
at temp. of ____ °F

Items 9 and 10 to be completed for tube sections

9. Tube Sheets: Stationary. Material ____ (Kind & Spec. No.) Dia. ____ (Subject to pressure) Thickness ____ in. Attachment ____ (Welded, Bolted)

Floating. Material ____ Dia. ____ Thickness ____ in. Attachment ____

10. Tubes: Material ____ O.D. ____ in. Thickness ____ inches or gage. Number ____ Type ____ (Str. or U)

Items 11–14 incl. to be completed for inner chambers of jacketed vessels, or channels of heat exchangers.

11. Shell: Material ____ (Kind & Spec. No.) T.S. ____ (Min. of Range Specified) Nominal Thickness ____ in. Corrosion Allowance ____ in. Dia. ____ ft. ____ in. Length ____ ft. ____ in.

12. Seams: Long ____ H.T.[1] ____ R.T. ____ Efficiency ____ %

Girth ____ H.T.[1] ____ R.T. ____ No. of Courses ____

13. Heads (a) Material ____ T.S. ____ (b) Material ____ T.S. ____

Location	Thickness	Crown Radius	Knuckle Radius	Elliptical Ratio	Conical Apex Angle	Hemispherical Radius	Flat Diameter	Side to Press. (Conv. or Conc.)
(a) Top, bottom, ends								
(b) Channel								

If removable, bolts used (a) ____ (b) ____ (c) ____ Other fastening ____ (Describe or attach sketch)

14. Design pressure[2] ____ psi at ____ °F

Drop Weight ____
Charpy Impact ____ ft-lb
at temp. of ____ °F

Items below to be completed for all vessels where applicable.

15. Safety Valve Outlets: Number ____ Size ____ Location ____

16. Nozzles

Purpose (Inlet, Outlet, Drain)	Number	Dia. or Size	Type	Material	Thickness	Reinforcement Material	How Attached

17. Inspection Openings: Manholes, No. ____ Size ____ Location ____
Handholes, No. ____ Size ____ Location ____
Threaded, No. ____ Size ____ Location ____

18. Supports: Skirt ____ (Yes or No) Lugs ____ (Number) Legs ____ (Number) Other ____ (Describe) Attached ____ (Where & How)

[1] If Postweld Heat-Treated.
[2] For either internal or external pressure with coincident temperature when applicable.

ZX0036775Z

WOT No 01142671 48

ENERGY NORTHWEST
People · Vision · Solutions

FORM NIS-2 OWNER'S REPORT FOR REPAIR/REPLACEMENT ACTIVITY
As Required By The Provisions Of The ASME Code Section XI

Date: 06/26/2009
Sheet: 1 Of 1
Unit: Not Applicable

1. **Owner:** Energy Northwest
   Address: Columbia Generating Station, North Power Plant Loop, Richland, Washington, 99352
2. **Plant:** Columbia Generating Station
   Address: Columbia Generating Station, North Power Plant Loop, Richland, Washington, 99352
3. **(a) Work Performed By:** Energy Northwest
   (b) Repair/Replacement Organization P.O. No, Job No, etc.: Energy Northwest
   (c) Type Code Symbol Stamp: Not Applicable
   (d) Certificate Of Authorization No.: Not Applicable
   (e) Expiration Date: Not Applicable
4. **Identification Of System:** Control Rod Drive (CRD) System
5. **(a) Applicable Construction Code:** ASME Section III, Code Class 1, 1974 Edition with Winter 1975 Addenda, Code Case: Note 1
   (b) Applicable Edition Of ASME Section XI Used For Repair/Replacement Activity: 2001 Edition with 2003 Addenda
   (c) Applicable ASME Section XI Case(s): None
6. **Identification Of Components**

Name Of Component	Name Of Manufacturer	Manufacturer's Serial No	National Board No	Other I.D.	Year Built	Corrected, Removed Or Installed	ASME Code Stamped (Yes Or No) Code Class
CRD	GE	A9541	N/A	N/A	1994	Removed	Yes, Code Class 1
CRD	GE	A8486	N/A	N/A	1988	Installed	Yes, Code Class 1

7. **Description Of Work Performed:** Replaced Control Rod Drive (CRD) assembly at Core Location 38-07. The replacement work was performed in accordance with plant procedure PPM No 10.5.7 "Control Rod Drive Removal And Replacement" as follows:

1) Removed all eight (8) existing cap screws from the CRD assembly bolted flanged connection.
2) Removed existing CRD assembly, Serial No A9541.
3) Performed VT-1 visual examination on all eight (8) new replacement cap screws. VT-1 visual examination results acceptable.
4) Installed replacement CRD assembly, Serial No A8486.
5) Installed eight (8) VT-1 visually examined new replacement cap screws for the CRD assembly bolted flanged connection.
6) Torqued the cap screws for the CRD assembly bolted flanged connection to the required torque values.
7) Performed VT-2 visual examination during pressure test on CRD assembly bolted flanged connection to confirm pressure boundary integrity of the joint. No leakage was observed during pressure test.

NOTES

1) The applicable ASME Code Cases, if any are listed on the ASME Code Data Reports.
2) The replacement CRD assembly, Serial No A8486 is certified to comply with ASME Section III, Code Class 1, 1974 Edition with Winter 1975 Addenda requirements.
3) Eight (8) new replacement cap screws, SA-540 Gr. B23, Class 4, Heat No 56624, Heat (Trace) Code No OH50.
4) VT-1 visual examination Report No 3RPV-001 for the new replacement cap screws.

WOT No 01142671 48

ENERGY NORTHWEST
People · Vision · Solutions

FORM NIS-2 OWNER'S REPORT FOR REPAIR/REPLACEMENT ACTIVITY (Back)

8 Tests Conducted: Hydrostatic [ ] Pneumatic [ ] Nominal Operating Pressure [ ] Other [ ]
Exempt [ ] **Test Pressure:** 1020 Psig **Test Temperature:** 165° F

9. Remarks (Applicable Manufacturer's Data Reports to be attached): 1) See attached N-2 Code Data Report for the replacement CRD assembly, Serial No A8486. 2) * Pressure test on the CRD bolted flanged connection - Test pressure of 1020 Psig and test temperature of 165° F recorded during ASME Section XI pressure test in accordance with PPM No OSP-RPV-R801 "Reactor Pressure Vessel Leakage Test".

CERTIFICATE OF COMPLIANCE

I certify that the statements made in this Owner's Report are correct and that this conforms to the requirements of the ASME Code, Section XI.
Type Code Symbol Stamp: Not Applicable
Certificate Of Authorization No.: Not Applicable
Expiration Date: Not Applicable

Prepared By Kuldip Singh - Program Lead Engineer (PLE) **Signed By** Kuldip Singh - Program Lead Engineer (PLE)

Date 6/26/09 **Date** 6/26/09.

CERTIFICATE OF INSERVICE INSPECTION

I, the undersigned, holding a valid commission issued by the National Board of Boiler and Pressure Vessel Inspectors and the State of Washington *and employed by* Hartford Steam Boiler Of Connecticut of Hartford, Connecticut *have inspected the components described in this Owner's Report during the period* 4/1/2009 *to* 7/1/2009 *and state to the best of my knowledge and belief, the Owner has performed examinations and taken corrective measures described in this Owner's Report in accordance with the requirements of the ASME Code, Section XI.*
By signing this certificate neither the Inspector nor his employer makes any warranty, expressed or implied, concerning the examinations and corrective measures described in this Owner's Report. Furthermore, neither the Inspector nor his employer shall be liable in any manner for any personal injury or property damage or a loss of any kind arising from or connected with this inspection.

Inspector's Signature **Commissions** 13172 WANI
National Board, State, and Endorsements

Date 7/1/2009

WOT No. 01142671 48

Philip Sims

6/26/08

FORM N-2 NPT CERTIFICATE HOLDERS' DATA REPORT FOR NUCLEAR PART AND APPURTENANCES*
As required by the Provision of the ASME Code Rules, Section III, Div. 1

1. Manufactured & Certified by: GE Company, 2117 Castle Hayne Rd., Wilmington, N.C. 28402
(Name and Address of NPT Certificate Holder)

(b) Manufactured for: WNP-2, RICHLAND, Wa. 99352
(Name and Address of N Certificate Holder for completed nuclear component)

2. Identification-Certificate Holders's S/N of Part: A8486 Nat'l Bd. No. N/A

(a) Constructed According to Drawing No: 919D258G003 Dwg. Prepared by D. L. Peterson

(b) Description of Part Inspected: CYLINDER TUBE & FLANGE

(c) Applicable ASME Code: Section III, Edition 1974, Addenda Date W'75 Case No. 1361-2 Class 1

3. REMARKS: Sub-assembly of Control Rod Drive for use with reactor.
(Brief description of service for which component was designed)
Hydrostatically tested at 1825 psi. min.

*Sheet 1 of 2

We certify that the statements in this report are correct and this vessel part or appurtenance as defined in the code conforms to the rules of construction of the ASME Code Section III. (The applicable Designed Specification and Stress Report are not the responsibility of the NPT Certificate Holder for parts. An NPT Certification Holder for appurtenances is responsible for furnishing a separate Design Specification and Stress Report if the appurtenance is not included in the component Design Specification and Stress Report).

DATE: 5/27, 19 88 Signed GE-NEBG-NF&CM-QA By [signature]
(NPT Certificate Holder)

Certificate Of Authorization Expires: 6/16/90 Certification of Authorization No.: NPT N-1151

CERTIFICATION OF DESIGN FOR APPURTENANCE

Design information on file at GE COMPANY, SAN JOSE, CALIFORNIA

Stress analysis report on file at GE COMPANY, SAN JOSE, CALIFORNIA
DC22A6253 Rev. 0
Design specification certified by BJORN HAABERG Prof. Eng. State CALIF. Reg. No. 15570
DC22A6254 Rev. 0.
Stress analysis report certified by EDWARD YOSHIO Prof. Eng. State CALIF. Reg. No. M018646

CERTIFICATION OF SHOP INSPECTION

I, the undersigned, holding a valid commission by the National Board of Boiler and Pressure Inspectors and/or the State or Province of NORTH CAROLINA and employed by DEPARTMENT OF LABOR of STATE OF NORTH CAROLINA have inspected the part of a pressure vessel described in this Partial Data Report on 5/27 19 88, and state that to the best of my knowledge and belief, the NPT Certificate Holder has constructed this part in accordance with the ASME Code Section III.

By signing this certificate, neither the Inspector nor his employer makes any warranty, expressed or implied, concerning the part described in the Partial Data Report. Furthermore, neither the Inspector nor his employer shall be liable in any manner for any personal injury or property damages or a loss of any kind arising from or connected with this inspection.

5/27, 19 88 [signature] N.C. 723, PA.WC1766, OHIO
DATE Inspector's Signature National Board, State, Province and No.

Supplemental sheets in form of lists, sketches or drawing may be used provided (1) size is 8-1/2" X 11", (2) information in 1-2 on this Data Report is included on each sheet, and (3) each sheet is numbered and number of sheets is recorded in Item 3. "REMARKS"

10/77)

S/.

11/21/08

FORM N-2 (back)

ems 4-8 Incl. to be completed for single wall vessels, jackets vessels, or shells of heat exchangers.

Shell: Material_____ T.S._____ Nominal Thickness___in. Corrosion Allowance____in Dia.____ft.___in. Length___ft.____in.
(Kind & Spec.No) (Min.ofRange Specified)

. Seams: Long_____ H.T.[1]_____ R.T._____ Efficiency_____%

Girth_____ H.T.[1]_____ R.T._____ No. of Courses_____

. Heads: (a) Material_____ T.S._____ (b)Material_____ T.S._____

Location (Top Bottom,Ends)	Thickness	Crown Radius	Knuckle Radius	Elliptical Ratio	Concial Apex Angle	Hemispherical Radius	Flat Diameter	Side to Press. (conv.or conc.)
(a)_____	_____	_____	_____	_____	_____	_____	_____	_____
(b)_____	_____	_____	_____	_____	_____	_____	_____	_____

If removable, bolts used_____ Other fastening_____
(Material,Spec.No., T.S. Size Number) (Describe or attach sketch)

. Jacket Closure:_____
(Describe as ogee and weld,bar,etc. If bar give dimensions, if bolts, describe or sketch)

. Design Pressure [2] 1250 psi at 575 °F

Drop Weight_____
Charpy Impact_____ ft-lb
at temp. of_____ °F

tems 9 and 10 to be completed for tube sections.

. Tube Sheets: Stationary Mat'l._____ Dia._____ Thickness__in. Attachment_____
(Kind of Spec. No.) (Subj.to Press.) (Welded, Bolted)

Floating. Material _____ Dia._____ Thickness____in. Attachment_____

0. Tubes: Material_____ O.D._____ in. Thickness_____ inches or gage. Number____ Type_____
(Str. or U)

tems 11-14 incl. to be completed for inner chambers of jacketed vessels, or channels of heat exchangers

1. Shell: Material____ T.S.____ Nominal Thickness___in. Corrosion Allowance___in. Dia.___ft.___in___Length___ft.___in.
(Kind&Spec.No.) (Min.ofRange Specified)

2. Seams: Long_____ H.T.[1]_____ R.T._____ Efficiency_____%
Girth_____ H.T.[1]_____ R.T._____ No. of Courses_____

3. Heads (a) Material_____ T.S._____ (b)Material_____ T.S._____

Location	Ticnkess	Crown Radius	Knucle Radius	Elliptical Ratio	Concial Apex Angle	Hemispherical Radius	Fat Diameter	Side to Press (Conv.or Conc.)
(a)Top, Bottom, End	_____	_____	_____	_____	_____	_____	_____	_____
(b)Channel	_____	_____	_____	_____	_____	_____	_____	_____

If removable, bolts used (a)_____ (b)_____ (c)_____ Other Fastening_____
(Describe or attach sketch

Drop Weight_____,
Charpy Impact_____ ft-lb
at temp. of _____ °F

4. Design pressure[2]_____ psi at_____ °F

Items below to be completed for all vessels where applicable.

5. Safety Valve Outlets: Number_____ Size_____ Location_____

6. Nozzles:

Purpose (Inlet Outlet, Drain)	Number	Dia or Size	Type	Material	Thickness	Reinforcement Material	Attached
_____	_____	_____	_____	_____	_____	_____	_____
_____	_____	_____	_____	_____	_____	_____	_____

7. Inspection Openings: Manholes, No._____ Size_____ Location_____
Handles, No._____ Size_____ Location_____
Threaded, No._____ Size_____ Location_____

8. Supports: Skirt_____ Lugs_____ Legs_____ Other_____ Attached_____
(Yes or No) (Number) (Number) (Describe) (Where & How)

[1] If Postweld Heat-Treated.

[2] ... other internal or external pressure with coincident temperature when applicable.

WOT No 01142671 49

ENERGY NORTHWEST
People · Vision · Solutions

FORM NIS-2 OWNER'S REPORT FOR REPAIR/REPLACEMENT ACTIVITY
As Required By The Provisions Of The ASME Code Section XI

1. Owner: Energy Northwest
Address: Columbia Generating Station, North Power Plant Loop, Richland, Washington, 99352
2. Plant: Columbia Generating Station
Address: Columbia Generating Station, North Power Plant Loop, Richland, Washington, 99352

Date: 06/26/2009
Sheet: 1 Of 1
Unit: Not Applicable

3. (a) Work Performed By: Energy Northwest
(b) Repair/Replacement Organization P.O. No, Job No, etc.: Energy Northwest
(c) Type Code Symbol Stamp: Not Applicable
(d) Certificate Of Authorization No.: Not Applicable
(e) Expiration Date: Not Applicable
4. Identification Of System: Control Rod Drive (CRD) System
5. (a) Applicable Construction Code: ASME Section III, Code Class 1, 1974 Edition with Winter 1975 Addenda, Code Case: Note 1
(b) Applicable Edition Of ASME Section XI Used For Repair/Replacement Activity: 2001 Edition with 2003 Addenda
(c) Applicable ASME Section XI Case(s): None
6. Identification Of Components

Name Of Component	Name Of Manufacturer	Manufacturer's Serial No	National Board No	Other I.D.	Year Built	Corrected, Removed Or Installed	ASME Code Stamped (Yes Or No) Code Class
CRD	GE	6291	N/A	N/A	1974	Removed	Yes, Code Class 1
CRD	GE	A8534	N/A	N/A	1987	Installed	Yes, Code Class 1

7. Description Of Work Performed: Replaced Control Rod Drive (CRD) assembly at Core Location 38-15. The replacement work was performed in accordance with plant procedure PPM No 10.5.7 "Control Rod Drive Removal And Replacement" as follows:

1) Removed all eight (8) existing cap screws from the CRD assembly bolted flanged connection.
2) Removed existing CRD assembly, Serial No 6291.
3) Performed VT-1 visual examination on all eight (8) new replacement cap screws. VT-1 visual examination results acceptable.
4) Installed replacement CRD assembly, Serial No A8534.
5) Installed eight (8) VT-1 visually examined new replacement cap screws for the CRD assembly bolted flanged connection.
6) Torqued the cap screws for the CRD assembly bolted flanged connection to the required torque values.
7) Performed VT-2 visual examination during pressure test on CRD assembly bolted flanged connection to confirm pressure boundary integrity of the joint. No leakage was observed during pressure test.

NOTES

1) The applicable ASME Code Cases, if any are listed on the ASME Code Data Reports.
2) The replacement CRD assembly, Serial No A8534 is certified to comply with ASME Section III, Code Class 1, 1974 Edition with Winter 1975 Addenda requirements.
3) Eight (8) new replacement cap screws, SA-540 Gr. B23, Class 4, Heat No 56624, Heat (Trace) Code No OH50.
4) VT-1 visual examination Report No 3RPV-001 for the new replacement cap screws.

WOT No 01142671 49

ENERGY NORTHWEST
People · Vision · Solutions

FORM NIS-2 OWNER'S REPORT FOR REPAIR/REPLACEMENT ACTIVITY (Back)

8 Tests Conducted: Hydrostatic [ ] Pneumatic [ ] Nominal Operating Pressure [ ] Other [ ]
Exempt [ ] Test Pressure: 1020 Psig Test Temperature: 165° F

9. Remarks (Applicable Manufacturer's Data Reports to be attached): 1) See attached N-2 Code Data Report for the replacement CRD assembly, Serial No A8534. 2) * Pressure test on the CRD bolted flanged connection - Test pressure of 1020 Psig and test temperature of 165° F recorded during ASME Section XI pressure test in accordance with PPM No OSP-RPV-R801 "Reactor Pressure Vessel Leakage Test".

CERTIFICATE OF COMPLIANCE

I certify that the statements made in this Owner's Report are correct and that this conforms to the requirements of the ASME Code, Section XI.
Type Code Symbol Stamp: Not Applicable
Certificate Of Authorization No.: Not Applicable
Expiration Date: Not Applicable

Prepared By Kuldip Singh — Kuldip Singh - Program Lead Engineer (PLE)
Signed By Kuldip Singh — Kuldip Singh - Program Lead Engineer (PLE)
Date 6/26/09 Date 6/26/09.

CERTIFICATE OF INSERVICE INSPECTION

I, the undersigned, holding a valid commission issued by the National Board of Boiler and Pressure Vessel Inspectors and the State of Washington *and employed by* Hartford Steam Boiler Of Connecticut of Hartford, Connecticut *have inspected the components described in this Owner's Report during the period* 4/1/2009 *to* 7/1/2009 *and state to the best of my knowledge and belief, the Owner has performed examinations and taken corrective measures described in this Owner's Report in accordance with the requirements of the ASME Code, Section XI.*
By signing this certificate neither the Inspector nor his employer makes any warranty, expressed or implied, concerning the examinations and corrective measures described in this Owner's Report. Furthermore, neither the Inspector nor his employer shall be liable in any manner for any personal injury or property damage or a loss of any kind arising from or connected with this inspection.

Inspector's Signature — Commissions 13172 WANI
National Board, State, and Endorsements

Date 7/1/2009

WOT No. 01142671 49

...of the Provision of the ASME Code Rules, Section III, Div. 1

...ed & Certified by: GE Company, 2117 Castle Hayne Rd., Wilmington, N.C. 28
(Name and Address of NPT Certificate Holder)

...nufactured for: WNP-2
(Name and Address of N Certificate Holder for completed nuclear comp

Identification-Certificate Holders's S/N of Part: A8534 Nat'l Bd. No. N

(a) Constructed According to Drawing No: 919D258G003 Dwg. Prepared by D. L. Pet

(b) Description of Part Inspected: CYLINDER TUBE & FLANGE

(c) Applicable ASME Code: Section III, Edition 1974, Addenda Date W'75, Case No. 1361-2 C

3. REMARKS: Sub-assembly of Control Rod Drive for use with reactor.
(Brief description of service for which component was designed)
Hydrostatically tested at 1825 psi. min.

•Sheet 1 of 2 MWR A1 2726 7/22

We certify that the statements in this report are correct and this vessel part or appurte as defined in the code conforms to the rules of construction of the ASME Code Section (The applicable Designed Specification and Stress Report are not the responsibility of th Certificate Holder for parts. An NPT Certification Holder for appurtenances is respons for furnishing a separate Design Specification and Stress Report if the appurtenance is included in the component Design Specification and Stress Report).

DATE: 11/10, 19 87 Signed GE-NEBG-NF&CM-QA By
(NPT Certificate Holder)

Certificate Of Authorization Expires: 6/16/90 Certification of Authorization No.: NPT N-1

CERTIFICATION OF DESIGN FOR APPURTENANCE

esign information on file at GE COMPANY, SAN JOSE, CALIFORNIA

tress analysis report on file at GE COMPANY, SAN JOSE, CALIFORNIA
22A6253 Rev. 0
esign specification certified by BJORN HAABERG Prof. Eng. State CALIF. Reg. No. 1557
22A6254 Rev. 0.
tress analysis report certified by EDWARD YOSHIO Prof. Eng. State CALIF. Reg. No. M018

CERTIFICATION OF SHOP INSPECTION

I, the undersigned, holding a valid commission by the National Board of Boiler and Pressure Inspectors and/or the State or Province of NORTH CAROLINA and employed by DEPARTMENT OF LABOR STATE OF NORTH CAROLINA have inspected the part of a pressure vessel described in this Partial Data Report on 11-10 1987, and state that to the best of my knowledge and belief, the NPT Certificate Holder has constructed this part in accordance with the ASME Code Section III.

By signing this certificate, neither the Inspector nor his employer makes any warranty, expressed or implied, concerning the part described in the Partial Data Report. Furthermore, neither the Inspector nor his employer shall be liable in any manner for any personal injury or property damages or a loss of any kind arising from or connected with this inspection.

11-10, 1987 NC 779 PPWE 2660 - OH10
DATE Inspector's Signature National Board, State, Province and No

Supplemental sheets in form of lists, sketches or drawing may be used provided (1) size is 8½" X 11", (2) information in 1-2 on this Data Report is included on each sheet, and (3) each sheet is numbered and number of sheets is recorded in Item 3, "REMARKS"

(77)

VERIFIED & ACCEPTED

[illegible] to be completed for single wall vessels, jacketed vessels, or single or heat exchanger

[illegible] Material_____ T.S._____ Nominal Thickness___in. Corrosion Allowance____in Dia.____ft.___in. Length___ft.___in.
(Kind & Spec.No) (Min.of Range Specified)

MWR A12726

[illegible]ams: Long_____ H.T.[1]_____ R.T._____ Efficiency_____%

Girth_____ H.T.[1]_____ R.T._____ No. of Courses_____

S/N A8534

6. Heads: (a) Material_____ T.S._____ (b) Material_____ T.S._____

Cladup 1/15/88

Location (Top Bottom, Ends)	Thickness	Crown Radius	Knuckle Radius	Elliptical Ratio	Concial Apex Angle	Hemispherical Radius	Flat Diameter	Side to Press. (conv. or conc.)
(a)								
(b)								

If removable, bolts used_____ Other fastening_____
(Material, Spec.No., T.S. Size Number) (Describe or attach sketch)

7. Jacket Closure:_____
(Describe as ogee and weld, bar, etc. If bar give dimensions, if bolts, describe or sketch)

8. Design Pressure [2] 1250 psi at 575 °F

Drop Weight_____
Charpy Impact_____ ft-lb
at temp. of_____ °F

Items 9 and 10 to be completed for tube sections.

9. Tube Sheets: Stationary Mat'l._____ Dia._____ Thickness___in. Attachment_____
(Kind of Spec. No.) (Subj. to Press.) (Welded, Bolted)
Floating. Material_____ Dia._____ Thickness___in. Attachment_____

10. Tubes: Material_____ O.D.____in. Thickness_____ inches or gage. Number_____ Type_____
(Str. or U)

Items 11-14 incl. to be completed for inner chambers of jacketed vessels, or channels of heat exchangers

11. Shell: Material____ T.S.____ Nominal Thickness___in. Corrosion Allowance___in. Dia.___ft.___in___Length___ft.___in.
(Kind&Spec.No.) (Min.of Range Specified)

12. Seams: Long_____ H.T.[1]_____ R.T._____ Efficiency_____%
Girth_____ H.T.[1]_____ R.T._____ No. of Courses_____

13. Heads (a) Material_____ T.S._____ (b) Material_____ T.S._____

Location (a) Top, Bottom, End	Ticnkess	Crown Radius	Knucle Radius	Elliptical Ratio	Concial Apex Angle	Hemispherical Radius	Fat Diameter	Side to Press (Conv. or Conc.)
(b) Channel								

If removable, bolts used (a)_____ (b)_____ (c)_____ Other Fastening_____
(Describe or attach sketch

Drop Weight_____,
Charpy Impact_____ ft-lb
at temp. of_____ °F

14. Design pressure[2]_____ psi at_____ °F

Items below to be completed for all vessels where applicable.

15. Safety Valve Outlets: Number_____ Size_____ Location_____

16. Nozzles:

Purpose (Inlet Outlet, Drain)	Number	Dia or Size	Type	Material	Thickness	Reinforcement Material	Attached

17. Inspection Openings: Manholes, No._____ Size_____ Location_____
Handles, No._____ Size_____ Location_____
Threaded, No._____ Size_____ Location_____

18. Supports: Shirt_____ Lugs_____ Legs_____ Other_____ Attached_____
(Yes or No) (Number) (Number) (Describe) (Where & How)

1 If Postweld Heat-Treated.
2 List other internal or external pressure with coinincident temperature when applicalbe.

WOT No 01142671 50

ENERGY NORTHWEST
People·Vision·Solutions

FORM NIS-2 OWNER'S REPORT FOR REPAIR/REPLACEMENT ACTIVITY
As Required By The Provisions Of The ASME Code Section XI

1. Owner: Energy Northwest
Address: Columbia Generating Station, North Power Plant Loop, Richland, Washington, 99352
2. Plant: Columbia Generating Station
Address: Columbia Generating Station, North Power Plant Loop, Richland, Washington, 99352

Date: 06/26/2009
Sheet: 1 Of 1
Unit: Not Applicable

3. (a) Work Performed By: Energy Northwest
(b) Repair/Replacement Organization P.O. No, Job No, etc.: Energy Northwest
(c) Type Code Symbol Stamp: Not Applicable
(d) Certificate Of Authorization No.: Not Applicable
(e) Expiration Date: Not Applicable
4. Identification Of System: Control Rod Drive (CRD) System
5. (a) Applicable Construction Code: ASME Section III, Code Class 1, 1974 Edition with Winter 1975 Addenda, Code Case: Note 1
(b) Applicable Edition Of ASME Section XI Used For Repair/Replacement Activity: 2001 Edition with 2003 Addenda
(c) Applicable ASME Section XI Case(s): None
6. Identification Of Components

Name Of Component	Name Of Manufacturer	Manufacturer's Serial No	National Board No	Other I.D.	Year Built	Corrected, Removed Or Installed	ASME Code Stamped (Yes Or No) Code Class
CRD	GE	6404	N/A	N/A	1975	Removed	Yes, Code Class 1
CRD	GE	A9298	N/A	N/A	1996	Installed	Yes, Code Class 1

7. Description Of Work Performed: Replaced Control Rod Drive (CRD) assembly at Core Location 38-39. The replacement work was performed in accordance with plant procedure PPM No 10.5.7 "Control Rod Drive Removal And Replacement" as follows:

1) Removed all eight (8) existing cap screws from the CRD assembly bolted flanged connection.
2) Removed existing CRD assembly, Serial No 6404.
3) Performed VT-1 visual examination on all eight (8) new replacement cap screws. VT-1 visual examination results acceptable.
4) Installed replacement CRD assembly, Serial No A9298.
5) Installed eight (8) VT-1 visually examined new replacement cap screws for the CRD assembly bolted flanged connection.
6) Torqued the cap screws for the CRD assembly bolted flanged connection to the required torque values.
7) Performed VT-2 visual examination during pressure test on CRD assembly bolted flanged connection to confirm pressure boundary integrity of the joint. No leakage was observed during pressure test.

NOTES

1) The applicable ASME Code Cases, if any are listed on the ASME Code Data Reports.
2) The replacement CRD assembly, Serial No A9298 is certified to comply with ASME Section III, Code Class 1, 1974 Edition with Winter 1975 Addenda requirements.
3) Eight (8) new replacement cap screws, SA-540 Gr. B23, Class 4, Heat No 56624, Heat (Trace) Code No OH50.
4) VT-1 visual examination Report No 3RPV-001 for the new replacement cap screws.

WOT No 01142671 50

ENERGY NORTHWEST
People·Vision·Solutions

FORM NIS-2 OWNER'S REPORT FOR REPAIR/REPLACEMENT ACTIVITY (Back)

8 Tests Conducted: Hydrostatic ☐ **Pneumatic** ☐ **Nominal Operating Pressure** ☐ **Other** ☐
Exempt ☐ **Test Pressure:** 1020 Psig **Test Temperature:** 165° F

9. Remarks (Applicable Manufacturer's Data Reports to be attached): 1) See attached N-2 Code Data Report for the replacement CRD assembly, Serial No A9298. 2) * Pressure test on the CRD bolted flanged connection - Test pressure of 1020 Psig and test temperature of 165° F recorded during ASME Section XI pressure test in accordance with PPM No OSP-RPV-R801 "Reactor Pressure Vessel Leakage Test".

CERTIFICATE OF COMPLIANCE

I certify that the statements made in this Owner's Report are correct and that this conforms to the requirements of the ASME Code, Section XI.
Type Code Symbol Stamp: Not Applicable
Certificate Of Authorization No.: Not Applicable
Expiration Date: Not Applicable

Prepared By Kuldip Singh — Kuldip Singh - Program Lead Engineer (PLE)
Signed By Kuldip Singh — Kuldip Singh - Program Lead Engineer (PLE)

Date 6/26/09 **Date** 6/26/09.

CERTIFICATE OF INSERVICE INSPECTION

I, the undersigned, holding a valid commission issued by the National Board of Boiler and Pressure Vessel Inspectors and the State of Washington ***and employed by*** Hartford Steam Boiler Of Connecticut of Hartford, Connecticut ***have inspected the components described in this Owner's Report during the period*** 4/1/2009 ***to*** 7/2/2009 ***and state to the best of my knowledge and belief, the Owner has performed examinations and taken corrective measures described in this Owner's Report in accordance with the requirements of the ASME Code, Section XI.***
By signing this certificate neither the Inspector nor his employer makes any warranty, expressed or implied, concerning the examinations and corrective measures described in this Owner's Report. Furthermore, neither the Inspector nor his employer shall be liable in any manner for any personal injury or property damage or a loss of any kind arising from or connected with this inspection.

Inspector's Signature — **Commissions** 13172 WANI
National Board, State, and Endorsements

Date 7/2/2009

W07 No. 0\142671 50

FORM N-2 NPT CERTIFICATE HOLDERS' DATA REPORT FOR NUCLEAR PART AND APPURTENANCES*

As required by the Provision of the ASME Code Rules, Section III, Div. I

1. Manufactured & Certified by : General Electric Company Nuclear Energy (GE-NE)
   3901 Castle Hayne Road, Wilmington, North Carolina 28401
   (Name and Address of NPT Certificate Holder)

   (b) Manufactured for : WNP 2 Richland, Washington 99352
   (Name and Address of N Certificate Holder for completed nuclear component)

2. Identification - Certificate Holder's S/N of Part : A9298 Nat'l Bd. No. N/A

   (a) Constructed According to Drawing No: 919D258G003 Rev 18 Dwg. Prepared by D. L. Peterson

   (b) Description of Part Inspected: Cylinder Tube & Flange

   (c) Applicable ASME Code: Section III , Edition 1974 , Addenda Date W'75 , Case No. 1361-2 Class 1

3. REMARKS: Standard part for use with Reactor. Hydrostatically tested at 1825 psi. min.
   (Brief description of service for which component was designed)

Sheet 1 of 2

We certify that the statements in this report are correct and this vessel part or appurtenance as defined in the code conforms to the rules of construction of the ASME Code Section III. (The applicable Designed Specification and Stress Report are not the responsibility of the NPT Certificate Holder for parts. An NPT Certification Holder for appurtenances is responsible for furnishing a separate Design Specification and Stress Report if the appurtenance is not included in the component Design Specification and Stress Report).

Date: 03/28/96 Signed GE-NE (NPT Certificate Holder) By C S Bazzett (SC QA Representive)

Certificate of Authorization Expires: 6/16/96 Certification of Authorization No. : NPT N - 1151

Certification of Design for Appurtenance

Design information on file at GE Company, San Jose, California

Stress analysis report on file at GE Company, San Jose, California

DC22A6253 Rev. 2
Design specification certified by B.N. Sridhar Prof. Eng. State Calif. Reg. No. 18345

DC22A6254 Rev 1
Stress analysis report certified by Edward Yoshio Prof. Eng. State Calif. Reg. No. M018646

Certification of Shop Inspection

I, the undersigned, holding a valid commission by the National Board of Boiler and Pressure Inspectors and/or the State or Province of North Carolina and employed by Department of Labor of State of North Carolina have inspected the part of a pressure vessel described in this Partial Data Report on 3-29 , 96 , and state that to the best of my knowledge and belief, the NPT Certificate Holder has constructed this part in accordance with the ASME Code Section III.
By signing this certificate, neither the Inspector nor his employer makes any warranty, expressed or implied, concerning the part described in the Partial Data Report. Furthermore, neither the Inspector nor his employer shall be liable in any manner for any personal injury or property damages or a loss of any kind arising from or connected with this inspection.

3-29 , 96 (Date) Inspector's Signature NC 856 National Board, State, Province And No.

Supplemental sheets in form of lists, sketches or drawing may be used provided (1) size is 8-1/2" x 11", (2) information in 1-2 on this Data Report is included on each sheet, and (3) each sheet is numbered and number of sheets is recorded in Item 3. "REMARKS".

FORM N-2 (back)

Items 4-8 Incl. to be completed for single wall vessels, jackets vessels, or shells of heat exchangers.

4. Shell: Material _____ T.S. _____ Nominal Thickness ____ in. Corrosion Allowance ____ in. Dia. ____ ft. ____ in. Length ____ ft. ____ in.
(Kind & Spec. No.) (Min. of Range Specified)

5. Seams: Long _____ H.T.[1] _____ R.T. _____ Efficiency _____%
Girth _____ H.T.[1] _____ R.T. _____ No. of Courses _____

6. Heads: (a) Material _____ T.S. _____ (b) Material _____ T.S. _____

	Location (Top Bottom, Ends)	Thickness	Crown Radius	Knuckle Radius	Elliptical Ratio	Concial Apex Angle	Hemispherical Radius	Flat Diameter	Side to Press. (conv. or conc.)
(a)									
(b)									

If removable, bolts used _____ (Material, Spec. No., T.S. Size Number) Other fastening _____ (Describe or attach sketch)

7. Jacket Closure: _____
(Describe as ogee and weld, bar, etc. If bar give dimensions, if bolts, describe or sketch)

Drop Weight _____
Charpy Impact _____ ft-lb

8. Design pressure[2] 1250 psi at 575 °F at temp of _____ °F

Items 9 and 10 to be completed for tube sections

9. Tube Sheets: Stationary. Material _____ (Kind & Spec. No.) Dia. _____ (Subject to pressure) Thickness ____ in. Attachment _____ (Welded, Bolted)
Floating. Material _____ Dia. _____ Thickness ____ in. Attachment _____

10. Tubes: Material _____ O.D. _____ in. Thickness _____ inches or gage. Number _____ Type _____ (Str. or ...)

Items 11 - 14 incl. to be completed for inner chambers of jacketed vessels, or channels of heat exchangers.

11. Shell: Material _____ T.S. _____ Nominal Thickness ____ in. Corrosion Allowance ____ in. Dia. ____ ft. ____ in. Length ____ ft. ____ in.
(Kind & Spec. No.) (Min. of Range Specified)

12. Seams: Long _____ H.T.[1] _____ R.T. _____ Efficiency _____%
Girth _____ H.T.[1] _____ R.T. _____ No. of Courses _____

13. Heads: (a) Material _____ T.S. _____ (b) Material _____ T.S. _____

	Location	Thickness	Crown Radius	Knuckle Radius	Elliptical Ratio	Concial Apex Angle	Hemispherical Radius	Flat Diameter	Side to Press. (conv. or conc.)
(a)	Top, bottom, ends								
(b)	Channel								

If removable, bolts used (a)_____ (b)_____ (c)_____ Other fastening _____ (Describe or attach sketch)

Drop Weight _____
Charpy Impact _____ ft-lb

14. Design pressure[2] _____ psi at _____ °F at temp of _____ °F

Items below to be completed for all vessels where applicable.

15. Safety Valve Outlets: Number _____ Size _____ Location _____

16. Nozzles:

Purpose (Inlet, Outlet, Drain)	Number	Dia. or Size	Type	Material	Thickness	Reinforcement Material	How Attached

17. Inspection Openings: Manholes, No. _____ Size _____ Location _____
Handholes, No. _____ Size _____ Location _____
Threaded, No. _____ Size _____ Location _____

18. Supports: Skirt _____ (Yes or No) Lugs _____ (Number) Legs _____ (Number) Other _____ (Describe) Attached _____ (Where & How)

[1] Postweld Heat-Treated.

[2] Must other internal or external pressure with coincident temperature when applicable.

WOT No. 0114267150

FORM N-2 NPT CERTIFICA HOLDERS' DATA REPORT FOR NUCLE PART AND APPURTENANCES*
As required by the Provision of the ASME Code Rule., Section III, Div. I

6/26/08.

1. Manufactured & Certified by : General Electric Company Nuclear Energy (GE-NE)
3901 Castle Hayne Road, Wilmington, North Carolina 28401
(Name and Address of NPT Certificate Holder)

(b) Manufactured for : WNP 2 Richland, Washington 99352
(Name and Address of N Certificate Holder for completed nuclear component)

2. Identification - Certificate Holder's S/N of Part : A9298 Nat'l Bd. No. N/A

(a) Constructed According to Drawing No: 919D258G003 Rev 18 Dwg. Prepared by D. L. Peterson

(b) Description of Part Inspected: Cylinder Tube & Flange

(c) Applicable ASME Code: Section III , Edition 1974 , Addenda Date W'75 , Case No. 1361-2 Class 1

3. REMARKS: Standard part for use with Reactor. Hydrostatically tested at 1825 psi. min.
(Brief description of service for which component was designed)

Sheet 2 of 2

1. Cap 166B9274P001
SA182 - F316
3/8" thick x 1 1/16" OD

2. Indicator Tube 167B4908P001
SA312 - TP316
3/4" sch 40 - seamless pipe
0.113" wall thickness
1.065" max. dia.

3. Plug 159A1176P001
SA182 - F304
1/4" thick x 0.812" OD

4. Flange 919D610P001 (719E474)
SA182 - F304
3.37" thick x 9 5/8" OD

5. Head 129B3539P005
SA182 - F304
7/8" thick x 2.875" dia.

6. Ring Flange 114B5122P002
SA182 - F304
1" thick x 5.0" OD x 1.75" ID

7. Cap Screw 117C4516P002
SA193 - B6
6 ea. 1/2" dia. on 4 1/8" bolt circle

8. Plug 175A7961P001
SA182 - F304
0.38" thick x 1.307" dia.

9. Nut 114B5460P001
XM - 19 SA479
1.30" thick x 2.62" dia.

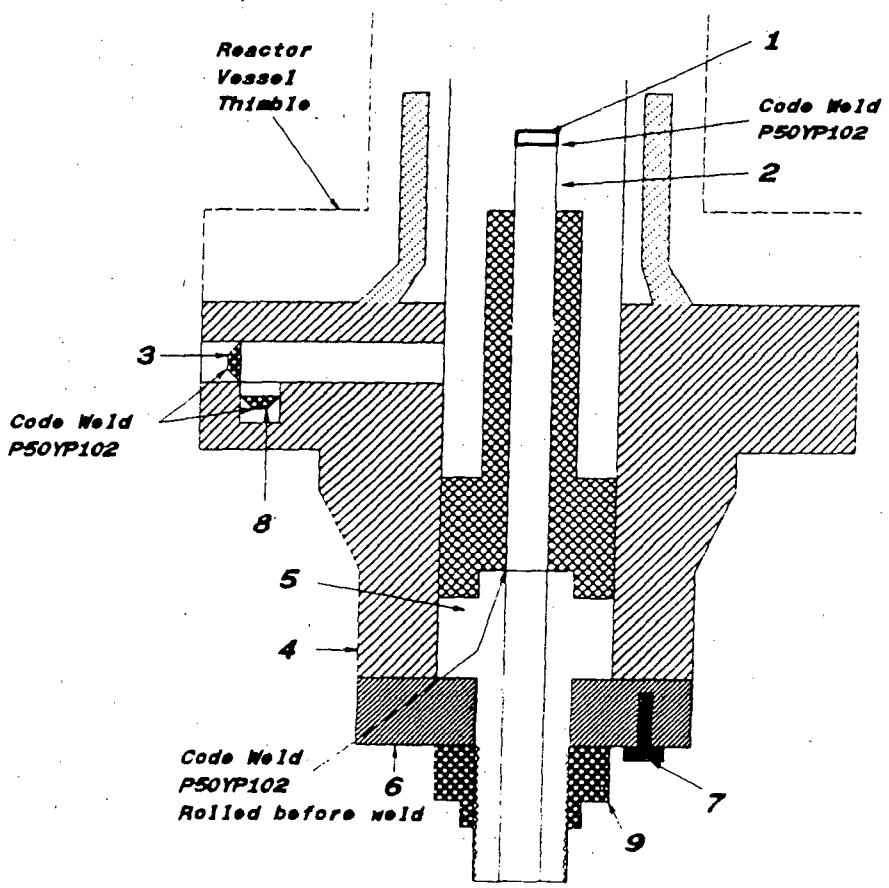

WOT No 01142671 51

ENERGY NORTHWEST
People · Vision · Solutions

FORM NIS-2 OWNER'S REPORT FOR REPAIR/REPLACEMENT ACTIVITY
As Required By The Provisions Of The ASME Code Section XI

1. Owner: Energy Northwest
Address: Columbia Generating Station, North Power Plant Loop, Richland, Washington, 99352
2. Plant: Columbia Generating Station
Address: Columbia Generating Station, North Power Plant Loop, Richland, Washington, 99352

Date: 06/26/2009
Sheet: 1 Of 1
Unit: Not Applicable

3. (a) Work Performed By: Energy Northwest
(b) Repair/Replacement Organization P.O. No, Job No, etc.: Energy Northwest
(c) Type Code Symbol Stamp: Not Applicable
(d) Certificate Of Authorization No.: Not Applicable
(e) Expiration Date: Not Applicable
4. Identification Of System: Control Rod Drive (CRD) System
5. (a) Applicable Construction Code: ASME Section III, Code Class 1, 1971 Edition with no Addenda, Code Case: Note 1
(b) Applicable Edition Of ASME Section XI Used For Repair/Replacement Activity: 2001 Edition with 2003 Addenda
(c) Applicable ASME Section XI Case(s): None
6. Identification Of Components

Name Of Component	Name Of Manufacturer	Manufacturer's Serial No	National Board No	Other I.D.	Year Built	Corrected, Removed Or Installed	ASME Code Stamped (Yes Or No) Code Class
CRD	GE	7000	N/A	N/A	1974	Removed	Yes, Code Class 1
CRD	GE	6006	N/A	N/A	1974	Installed	Yes, Code Class 1

7. Description Of Work Performed: Replaced Control Rod Drive (CRD) assembly at Core Location 38-51. The replacement work was performed in accordance with plant procedure PPM No 10.5.7 "Control Rod Drive Removal And Replacement" as follows:

1) Removed all eight (8) existing cap screws from the CRD assembly bolted flanged connection.
2) Removed existing CRD assembly, Serial No 7000.
3) Performed VT-1 visual examination on all eight (8) new replacement cap screws. VT-1 visual examination results acceptable.
4) Installed replacement CRD assembly, Serial No 6006.
5) Installed eight (8) VT-1 visually examined new replacement cap screws for the CRD assembly bolted flanged connection.
6) Torqued the cap screws for the CRD assembly bolted flanged connection to the required torque values.
7) Performed VT-2 visual examination during pressure test on CRD assembly bolted flanged connection to confirm pressure boundary integrity of the joint. No leakage was observed during pressure test.

NOTES

1) The applicable ASME Code Cases, if any are listed on the ASME Code Data Reports.
2) The replacement CRD assembly, Serial No 6006 is certified to comply with ASME Section III, Code Class 1, 1971 Edition with no Addenda requirements.
3) Eight (8) new replacement cap screws, SA-540 Gr. B23, Class 4, Heat No 56624, Heat (Trace) Code No OH50.
4) VT-1 visual examination Report No 3RPV-001 for the new replacement cap screws.

WOT No 01142671 51

ENERGY NORTHWEST
People · Vision · Solutions

FORM NIS-2 OWNER'S REPORT FOR REPAIR/REPLACEMENT ACTIVITY (Back)

8 Tests Conducted: Hydrostatic [ ] Pneumatic [ ] Nominal Operating Pressure [ ] Other [ ]
Exempt [ ] **Test Pressure:** 1020 Psig **Test Temperature:** 165° F

9. Remarks (Applicable Manufacturer's Data Reports to be attached): 1) See attached N-2 Code Data Report for the replacement CRD assembly, Serial No 6006. 2) * Pressure test on the CRD bolted flanged connection - Test pressure of 1020 Psig and test temperature of 165° F recorded during ASME Section XI pressure test in accordance with PPM No OSP-RPV-R801 "Reactor Pressure Vessel Leakage Test".

CERTIFICATE OF COMPLIANCE

I certify that the statements made in this Owner's Report are correct and that this conforms to the requirements of the ASME Code, Section XI.
Type Code Symbol Stamp: Not Applicable
Certificate Of Authorization No.: Not Applicable
Expiration Date: Not Applicable

Prepared By Kuldip Singh - Program Lead Engineer (PLE) **Signed By** Kuldip Singh - Program Lead Engineer (PLE)

Date 6/26/09 **Date** 6/26/09

CERTIFICATE OF INSERVICE INSPECTION

I, the undersigned, holding a valid commission issued by the National Board of Boiler and Pressure Vessel Inspectors and the State of Washington *and employed by* Hartford Steam Boiler Of Connecticut of Hartford, Connecticut *have inspected the components described in this Owner's Report during the period* 4/1/2009 *to* 7/2/2009 *and state to the best of my knowledge and belief, the Owner has performed examinations and taken corrective measures described in this Owner's Report in accordance with the requirements of the ASME Code, Section XI.*
By signing this certificate neither the Inspector nor his employer makes any warranty, expressed or implied, concerning the examinations and corrective measures described in this Owner's Report. Furthermore, neither the Inspector nor his employer shall be liable in any manner for any personal injury or property damage or a loss of any kind arising from or connected with this inspection.

Inspector's Signature **Commissions** 13172 WANI
National Board, State, and Endorsements

Date 7/2/2009

W07 No. 01142671 51

FORM N-2 MANUFACTURERS DATA REPORT FOR NUCLEAR PART AND APPURTENANCES

As required by the Provisions of the ASME Code Rules

Philip Smith 6/26/07.

1. (a) Manufactured by General Electric Company, Castle Hayne Rd., Wilmington, N. C.
(Name and address of Manufacturer of part)

(b) Manufactured for General Electric Company, San Jose, California
(Name and address of Manufacturer of completed nuclear component)

2. Identification-Manufacturer's Serial No. of Part 6006 Nat'l Bd. No.

(a) Constructed According to Drawing No. 761E387G2 Drawing Prepared by D. L. Peterson

(b) Description of Part Inspected Control Rod Drive, Model #7RDB144 C1

(c) Applicable ASME Code: Section III, Edition 1971, Addenda date None, Case No. 1361-1 Class 1

3. Remarks: Standard part for use with Reactor. Hydrostatically tested at 1521 psi
(Brief description of service for which component was designed)
minimum.

We certify that the statements made in this report are correct and this vessel part or appurtenance as defined in the Code conforms to the rules of construction of the ASME Code Section III.
(The applicable Design Specification and Stress Report are not the responsibility of the part Manufacturer. An appurtenance Manufacturer is responsible for furnishing a separate Design Specification and Stress Report if the appurtenance is not included in the component Design Specification and Stress Report.)

Date December 17 19 74 Signed GE, BWRSD - REM (Manufacturer) By Wm. J. Heuchen

Certificate of Authorization Expires June 20, 1975 Certificate of Authorization No. NPT - 462

CERTIFICATION OF DESIGN FOR APPURTENANCE (when applicable)

Design information on file at General Electric Co., BWRSD-REM, Castle Hayne Rd., Wilmington

Stress analysis report on file at General Electric Co., BWRSD-REM, Castle Hayne Rd., Wilmington

Design specifications certified by Vernon W. Pence Prof. Eng. State Calif. Reg. No. 14488

Stress analysis report certified by Vernon W. Pence Prof. Eng. State Calif. Reg. No. 14488

CERTIFICATE OF SHOP INSPECTION

I, the undersigned, holding a valid commission issued by the National Board of Boiler and Pressure Vessel Inspectors and/or the State or Province of North Carolina and employed by Department of Labor of State of North Carolina have inspected the part of a pressure vessel described in this Manufacturer's Partial Data Report on December 17 19 74, and state that to the best of my knowledge and belief, the Manufacturer has constructed this part in accordance with the ASME Code Section III.
By signing this certificate, neither the Inspector nor his employer makes any warranty, expressed or implied, concerning the part described in this Manufacturer's Partial Data Report. Furthermore, neither the Inspector nor his employer shall be liable in any manner for any personal injury or property damage or a loss of any kind arising from or connected with this inspection.

Date December 17 19 74

FOR INFORMATION ONLY

E. R. Shirell
Inspector's Signature

Commissions NC 723, PA, NC 1766, Ohio
National Board, State, Province and No.

FORM N-22 (back)

Items 1–8 to be completed for single walled vessels, jackets of jacketed vessels, or shells of heat exchangers.

4. Shell: Material _____ (Kind & Spec. No.) T.S. _____ (Min. of Range Specified) Nominal Thickness ____ in. Corrosion Allowance ____ in. Dia. ____ ft. ____ in. Length ____ ft. ____ in.

5. Seams: Long _____ H.T.[1] _____ R.T. _____ Efficiency _____ %

Girth _____ H.T.[1] _____ R.T. _____ No. of Courses _____

6. Heads: (a) Material _____ T.S. _____ (b) Material _____ T.S. _____

Location (Top, bottom, ends)	Thickness	Crown Radius	Knuckle Radius	Elliptical Ratio	Conical Apex Angle	Hemispherical Radius	Flat Diameter	Side to Press. (Conv. or Conc.)
(a)								
(b)								

If removable, bolts used _____ (Material, Spec. No., T.S., Size, Number) Other fastening _____ (Describe or attach sketch)

7. Jacket Closure: _____ (Describe as ogee and weld, bar, etc. If bar give dimensions, If bolted, describe or sketch)

8. Design pressure[2] 1250 psi at 575 °F

Drop Weight _____
Charpy Impact _____ ft-lb
at temp. of _____ °F

Items 9 and 10 to be completed for tube sections

9. Tube Sheets: Stationary. Material _____ (Kind & Spec. No.) Dia. _____ (Subject to pressure) Thickness ____ in. Attachment _____ (Welded, Bolted)

Floating. Material _____ Dia. _____ Thickness ____ in. Attachment _____

10. Tubes: Material _____ O.D. ____ in. Thickness _____ inches or gage. Number _____ Type _____ (str. or U)

Items 11–14 incl. to be completed for inner chambers of jacketed vessels, or channels of heat exchangers.

11. Shell: Material _____ (Kind & Spec. No.) T.S. _____ (Min. of Range Specified) Nominal Thickness ____ in. Corrosion Allowance ____ in. Dia. ____ ft. ____ in. Length ____ ft. ____ in.

12. Seams: Long _____ H.T.[1] _____ R.T. _____ Efficiency _____ %

Girth _____ H.T.[1] _____ R.T. _____ No. of Courses _____

13. Heads (a) Material _____ T.S. _____ (b) Material _____ T.S. _____

Location	Thickness	Crown Radius	Knuckle Radius	Elliptical Ratio	Conical Apex Angle	Hemispherical Radius	Flat Diameter	Side to Press. (Conv. or Conc.)
(a) Top, bottom, ends								
(b) Channel								

If removable, bolts used (a) _____ (b) _____ (c) _____ Other fastening _____ (Describe or attach sketch)

14. Design pressure[2] _____ psi at _____ °F

Drop Weight _____
Charpy Impact _____ ft-lb
at temp. of _____ °F

Items below to be completed for all vessels where applicable.

FOR INFORMATION ONLY

15. Safety Valve Outlets: Number _____ Size _____ Location _____

16. Nozzles:

Purpose (Inlet, Outlet, Drain)	Number	Dia. or Size	Type	Material	Thickness	Reinforcement Material	How Attached

17. Inspection Openings: Manholes, No. _____ Size _____ Location _____
Handholes, No. _____ Size _____ Location _____
Threaded, No. _____ Size _____ Location _____

18. Supports: Skirt _____ (Yes or No) Lugs _____ (Number) Legs _____ (Number) Other _____ (Describe) Attached _____ (Where & How)

WOT No 01142671 52

ENERGY NORTHWEST
People · Vision · Solutions

FORM NIS-2 OWNER'S REPORT FOR REPAIR/REPLACEMENT ACTIVITY
As Required By The Provisions Of The ASME Code Section XI

1. Owner: Energy Northwest
Address: Columbia Generating Station, North Power Plant Loop, Richland, Washington, 99352
2. Plant: Columbia Generating Station
Address: Columbia Generating Station, North Power Plant Loop, Richland, Washington, 99352

Date: 06/26/2009
Sheet: 1 Of 1
Unit: Not Applicable

3. (a) Work Performed By: Energy Northwest
(b) Repair/Replacement Organization P.O. No, Job No, etc.: Energy Northwest
(c) Type Code Symbol Stamp: Not Applicable
(d) Certificate Of Authorization No.: Not Applicable
(e) Expiration Date: Not Applicable
4. Identification Of System: Control Rod Drive (CRD) System
5. (a) Applicable Construction Code: ASME Section III, Code Class 1, 1974 Edition with Winter 1975 Addenda, Code Case: Note 1
(b) Applicable Edition Of ASME Section XI Used For Repair/Replacement Activity: 2001 Edition with 2003 Addenda
(c) Applicable ASME Section XI Case(s): None
6. Identification Of Components

Name Of Component	Name Of Manufacturer	Manufacturer's Serial No	National Board No	Other I.D.	Year Built	Corrected, Removed Or Installed	ASME Code Stamped (Yes Or No) Code Class
CRD	GE	A9348	N/A	N/A	1993	Removed	Yes, Code Class 1
CRD	GE	A9319	N/A	N/A	1996	Installed	Yes, Code Class 1

7. Description Of Work Performed: Replaced Control Rod Drive (CRD) assembly at Core Location 38-59. The replacement work was performed in accordance with plant procedure PPM No 10.5.7 "Control Rod Drive Removal And Replacement" as follows:

1) Removed all eight (8) existing cap screws from the CRD assembly bolted flanged connection.
2) Removed existing CRD assembly, Serial No A9348.
3) Performed VT-1 visual examination on all eight (8) new replacement cap screws. VT-1 visual examination results acceptable.
4) Installed replacement CRD assembly, Serial No A9319.
5) Installed eight (8) VT-1 visually examined new replacement cap screws for the CRD assembly bolted flanged connection.
6) Torqued the cap screws for the CRD assembly bolted flanged connection to the required torque values.
7) Performed VT-2 visual examination during pressure test on CRD assembly bolted flanged connection to confirm pressure boundary integrity of the joint. No leakage was observed during pressure test.

NOTES -

1) The applicable ASME Code Cases, if any are listed on the ASME Code Data Reports.
2) The replacement CRD assembly, Serial No A9319 is certified to comply with ASME Section III, Code Class 1, 1974 Edition with Winter 1975 Addenda requirements.
3) Eight (8) new replacement cap screws, SA-540 Gr. B23, Class 4, Heat No 56624, Heat (Trace) Code No OH50.
4) VT-1 visual examination Report No 3RPV-001 for the new replacement cap screws.

WOT No 01142671 52

ENERGY NORTHWEST
People · Vision · Solutions

FORM NIS-2 OWNER'S REPORT FOR REPAIR/REPLACEMENT ACTIVITY (Back)

8 Tests Conducted: Hydrostatic [ ] **Pneumatic** [ ] **Nominal Operating Pressure** [ ] **Other** [*]
Exempt [ ] **Test Pressure:** 1020 Psig **Test Temperature:** 165° F

9. Remarks (Applicable Manufacturer's Data Reports to be attached): 1) See attached N-2 Code Data Report for the replacement CRD assembly, Serial No A9319. 2) * Pressure test on the CRD bolted flanged connection - Test pressure of 1020 Psig and test temperature of 165° F recorded during ASME Section XI pressure test in accordance with PPM No OSP-RPV-R801 "Reactor Pressure Vessel Leakage Test".

CERTIFICATE OF COMPLIANCE

I certify that the statements made in this Owner's Report are correct and that this conforms to the requirements of the ASME Code, Section XI.
Type Code Symbol Stamp: Not Applicable
Certificate Of Authorization No.: Not Applicable
Expiration Date: Not Applicable

Prepared By Kuldip Singh ***Signed By*** Kuldip Singh
Kuldip Singh - Program Lead Engineer (PLE) Kuldip Singh - Program Lead Engineer (PLE)
Date 6/26/09 ***Date*** 6/26/09.

CERTIFICATE OF INSERVICE INSPECTION

I, the undersigned, holding a valid commission issued by the National Board of Boiler and Pressure Vessel Inspectors and the State of Washington ***and employed by*** Hartford Steam Boiler Of Connecticut of Hartford, Connecticut ***have inspected the components described in this Owner's Report during the period*** 4/1/2009 ***to*** 7/2/2009 ***and state to the best of my knowledge and belief, the Owner has performed examinations and taken corrective measures described in this Owner's Report in accordance with the requirements of the ASME Code, Section XI.***
By signing this certificate neither the Inspector nor his employer makes any warranty, expressed or implied, concerning the examinations and corrective measures described in this Owner's Report. Furthermore, neither the Inspector nor his employer shall be liable in any manner for any personal injury or property damage or a loss of any kind arising from or connected with this inspection.

Inspector's Signature ***Commissions*** 13172 WANI
National Board, State, and Endorsements

Date 7/2/2009

WO7 No. 01142671 52

FORM N-2 NPT CERTIFICATE HOLDERS' DATA REPORT FOR NUCLEAR PART AND APPURTENANCES*

As required by the Provision of the ASME Code Rules, Section III, Div. I

1. Manufactured & Certified by : General Electric Company Nuclear Energy (GE-NE)

3901 Castle Hayne Road, Wilmington, North Carolina 28401

(Name and Address of NPT Certificate Holder)

(b) Manufactured for : WNP 2 Richland, Washington 99352

(Name and Address of N Certificate Holder for completed nuclear component)

2. Identification - Certificate Holder's S/N of Part : A9319 Nat'l Bd. No. N/A

(a) Constructed According to Drawing No: 919D258G003 Rev 18 Dwg. Prepared by D. L. Peterson

(b) Description of Part Inspected: Cylinder Tube & Flange

(c) Applicable ASME Code: Section III , Edition 1974 , Addenda Date W'75 , Case No. 1361-2 Class 1

3. REMARKS: Standard part for use with Reactor. Hydrostatically tested at 1825 psi. min.

(Brief description of service for which component was designed)

Philip Smith 6/26/09.

Sheet 1 of 2

We certify that the statements in this report are correct and this vessel part or appurtenance as defined in the code conforms to the rules of construction of the ASME Code Section III. (The applicable Designed Specification and Stress Report are not the responsibility of the NPT Certificate Holder for parts. An NPT Certification Holder for appurtenances, is responsible for furnishing a separate Design Specification and Stress Report if the appurtenance is not included in the component Design Specification and Stress Report).

Date: 03/28/96 Signed GE-NE By [signature]

(NPT Certificate Holder) (SC QA Representive)

Certificate of Authorization Expires: 6/16/96 Certification of Authorization No. : NPT N - 1151

Certification of Design for Appurtenance

Design information on file at GE Company, San Jose, California

Stress analysis report on file at GE Company, San Jose, California

DC22A6253 Rev. 2
Design specification certified by B.N. Sridhar Prof. Eng. State Calif. Reg. No. 18345

DC22A6254 Rev 1
Stress analysis report certified by Edward Yoshio Prof. Eng. State Calif. Reg. No. M018646

Certification of Shop Inspection

I, the undersigned, holding a valid commission by the National Board of Boiler and Pressure Inspectors and/or the State or Province of North Carolina and employed by Department of Labor of State of North Carolina have inspected the part of a pressure vessel described in this Partial Data Report on 3-29-, 96, and state that to the best of my knowledge and belief, the NPT Certificate Holder has constructed this part in accordance with the ASME Code Section III.

By signing this certificate, neither the Inspector nor his employer makes any warranty, expressed or implied, concerning the part described in the Partial Data Report. Furthermore, neither the Inspector nor his employer shall be liable in any manner for any personal injury or property damages or a loss of any kind arising from or connected with this inspection.

3-29-, 96 [signature] NC 856

Date Inspector's Signature National Board, State, Province And No.

*Supplemental sheets in form of lists, sketches or drawing may be used provided (1) size is 8-1/2" x 11", (2) information in 1-2 on this Data Report is included on each sheet, and (3) each sheet is numbered and number of sheets is recorded in Item 3. "REMARKS".

(37/90)

FORM N-2 (back)

Items 4-8 Incl. to be completed for single wall vessels, jackets vessels, or shells of heat exchangers.

4. Shell: Material _____ T.S. _____ Nominal Thickness ___ in. Corrosion Allowance ___ in. Dia. ___ ft. ___ in. Length ___ ft. ___ in.
(Kind & Spec. No.) (Min. of Range Specified)

5. Seams: Long _____ H.T.[1] _____ R.T. _____ Efficiency _____%
Girth _____ H.T.[1] _____ R.T. _____ No. of Courses _____

6. Heads: (a) Material _____ T.S. _____ (b) Material _____ T.S. _____

	Location (Top Bottom, Ends)	Thickness	Crown Radius	Knuckle Radius	Elliptical Ratio	Concial Apex Angle	Hemispherical Radius	Flat Diameter	Side to Press. (conv. or conc.)
(a)									
(b)									

If removable, bolts used _____ (Material, Spec. No., T.S. Size Number) Other fastening _____ (Describe or attach sketch)

7. Jacket Closure: _____
(Describe as ogee and weld, bar, etc. If bar give dimensions, if bolts, describe or sketch)

Drop Weight _____
Charpy Impact _____ ft-lb

8. Design pressure[2] 1250 psi at 575 °F at temp of _____ °F

Items 9 and 10 to be completed for tube sections

9. Tube Sheets: Stationary. Material _____ (Kind & Spec. No.) Dia. _____ (Subject to pressure) Thickness ___ in. Attachment _____ (Welded, Bolted)
Floating. Material _____ Dia. _____ Thickness ___ in. Attachment _____

10. Tubes: Material _____ O.D. _____ in. Thickness _____ inches or gage. Number _____ Type _____ (Str. or U)

Items 11 - 14 incl. to be completed for inner chambers of jacketed vessels, or channels of heat exchangers.

11. Shell: Material _____ T.S. _____ Nominal Thickness ___ in. Corrosion Allowance ___ in. Dia. ___ ft. ___ in. Length ___ ft. ___ in.
(Kind & Spec. No.) (Min. of Range Specified)

12. Seams: Long _____ H.T.[1] _____ R.T. _____ Efficiency _____%
Girth _____ H.T.[1] _____ R.T. _____ No. of Courses _____

13. Heads: (a) Material _____ T.S. _____ (b) Material _____ T.S. _____

	Location	Thickness	Crown Radius	Knuckle Radius	Elliptical Ratio	Concial Apex Angle	Hemispherical Radius	Flat Diameter	Side to Press. (conv. or conc.)
(a)	Top, bottom, ends								
(b)	Channel								

If removable, bolts used (a)_____ (b)_____ (c)_____ Other fastening _____ (Describe or attach sketch)

Drop Weight _____
Charpy Impact _____ ft-lb

14. Design pressure[2] _____ psi at _____ °F at temp of _____ °F

Items below to be completed for all vessels where applicable.

15. Safety Valve Outlets: Number _____ Size _____ Location _____

16. Nozzles:

Purpose (Inlet, Outlet, Drain)	Number	Dia. or Size	Type	Material	Thickness	Reinforcement Material	How Attached

17. Inspection Openings: Manholes, No. _____ Size _____ Location _____
Handholes, No. _____ Size _____ Location _____
Threaded, No. _____ Size _____ Location _____

18. Supports: Skirt _____ (Yes or No) Lugs _____ (Number) Legs _____ (Number) Other _____ (Describe) Attached _____ (Where & How)

1. Postweld Heat-Treated.
2. Just other internal or external pressure with coincident temperature when applicable.

WO7 No. 01142671 52

FORM N-2 NPT CERTIFICA HOLDERS' DATA REPORT FOR NUCLE PART AND APPURTENANCES*
As required by the Provision of the ASME Code Rules, Section III, Div. I

1. Manufactured & Certified by : General Electric Company Nuclear Energy (GE-NE)
3901 Castle Hayne Road, Wilmington, North Carolina 28401
(Name and Address of NPT Certificate Holder)

Philip Pauls 6/26/09.

(b) Manufactured for : WNP 2 Richland, Washington 99352
(Name and Address of N Certificate Holder for completed nuclear component)

2. Identification - Certificate Holder's S/N of Part : A9319 Nat'l Bd. No. N/A

(a) Constructed According to Drawing No: 919D258G003 Rev 18 Dwg. Prepared by D. L. Peterson

(b) Description of Part Inspected: Cylinder Tube & Flange

(c) Applicable ASME Code: Section III , Edition 1974 , Addenda Date W'75 , Case No. 1361-2 Class 1

3. REMARKS: Standard part for use with Reactor. Hydrostatically tested at 1825 psi. min.
(Brief description of service for which component was designed)

1. Cap 166B9274P001
SA182 - F316
3/8" thick x 1 1/16" OD

2. Indicator Tube 167B4908P001
SA312 - TP316
3/4" sch 40 - seamless pipe
0.113" wall thickness
1.065" max. dia.

3. Plug 159A1176P001
SA182 - F304
1/4" thick x 0.812" OD

4. Flange 919D610P001 (719E474)
SA182 - F304
3.37" thick x 9 5/8" OD

5. Head 129B3539P005
SA182 - F304
7/8" thick x 2.875" dia.

6. Ring Flange 114B5122P002
SA182 - F304
1" thick x 5.0" OD x 1.75" ID

7. Cap Screw 117C4516P002
SA193 - B6
6 ea. 1/2" dia. on 4 1/8" bolt circle

8. Plug 175A7961P001
SA182 - F304
0.38" thick x 1.307" dia.

9. Nut 114B5460P001
XM - 19 SA479
30" thick x 2.62" dia.

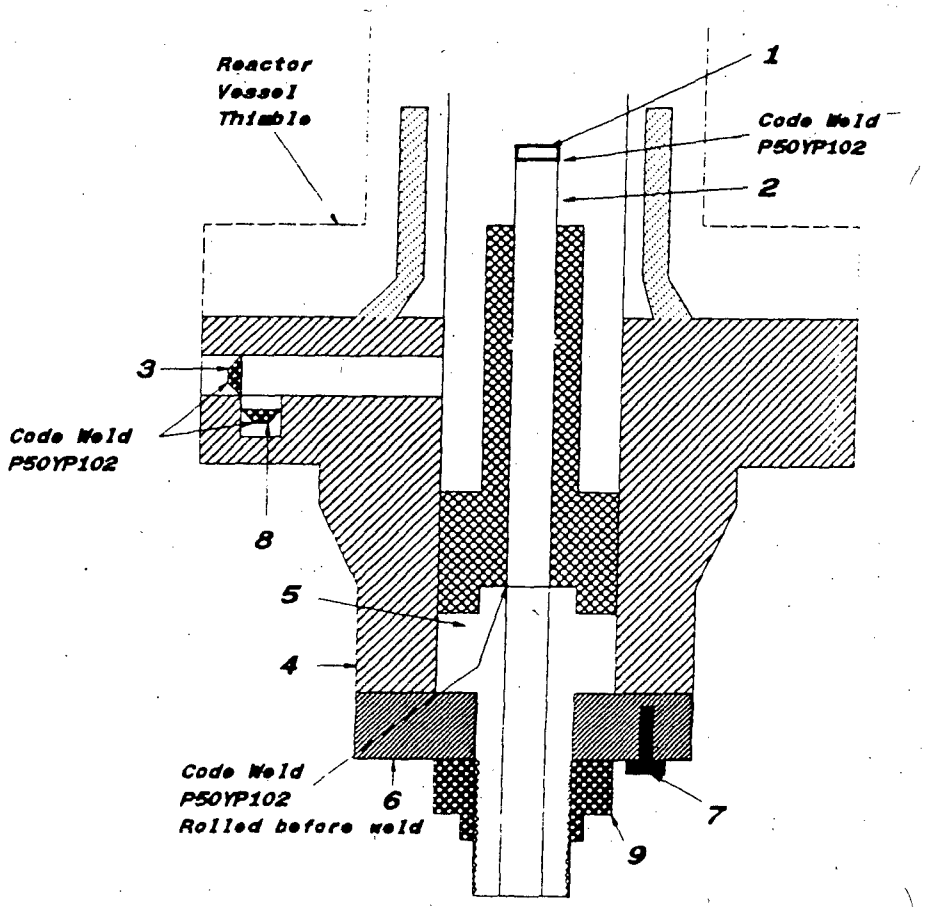

WOT No 01142671 53

ENERGY NORTHWEST
People · Vision · Solutions

FORM NIS-2 OWNER'S REPORT FOR REPAIR/REPLACEMENT ACTIVITY
As Required By The Provisions Of The ASME Code Section XI

Date: 06/26/2009
Sheet: 1 Of 1
Unit: Not Applicable

1. **Owner:** Energy Northwest
   Address: Columbia Generating Station, North Power Plant Loop, Richland, Washington, 99352
2. **Plant:** Columbia Generating Station
   Address: Columbia Generating Station, North Power Plant Loop, Richland, Washington, 99352
3. **(a) Work Performed By:** Energy Northwest
   (b) Repair/Replacement Organization P.O. No, Job No, etc.: Energy Northwest
   (c) Type Code Symbol Stamp: Not Applicable
   (d) Certificate Of Authorization No.: Not Applicable
   (e) Expiration Date: Not Applicable
4. **Identification Of System:** Control Rod Drive (CRD) System
5. **(a) Applicable Construction Code:** ASME Section III, Code Class 1, 1974 Edition with Winter 1975 Addenda, Code Case: Note 1
   (b) Applicable Edition Of ASME Section XI Used For Repair/Replacement Activity: 2001 Edition with 2003 Addenda
   (c) Applicable ASME Section XI Case(s): None
6. **Identification Of Components**

Name Of Component	Name Of Manufacturer	Manufacturer's Serial No	National Board No	Other I.D.	Year Built	Corrected, Removed Or Installed	ASME Code Stamped (Yes Or No) Code Class
CRD	GE	6512	N/A	N/A	1975	Removed	Yes, Code Class 1
CRD	GE	A9309	N/A	N/A	1996	Installed	Yes, Code Class 1

7. **Description Of Work Performed:** Replaced Control Rod Drive (CRD) assembly at Core Location 42-43. The replacement work was performed in accordance with plant procedure PPM No 10.5.7 "Control Rod Drive Removal And Replacement" as follows:

1) Removed all eight (8) existing cap screws from the CRD assembly bolted flanged connection.
2) Removed existing CRD assembly, Serial No 6512.
3) Performed VT-1 visual examination on all eight (8) new replacement cap screws. VT-1 visual examination results acceptable.
4) Installed replacement CRD assembly, Serial No A9309.
5) Installed eight (8) VT-1 visually examined new replacement cap screws for the CRD assembly bolted flanged connection.
6) Torqued the cap screws for the CRD assembly bolted flanged connection to the required torque values.
7) Performed VT-2 visual examination during pressure test on CRD assembly bolted flanged connection to confirm pressure boundary integrity of the joint. No leakage was observed during pressure test.

NOTES -

1) The applicable ASME Code Cases, if any are listed on the ASME Code Data Reports.
2) The replacement CRD assembly, Serial No A9309 is certified to comply with ASME Section III, Code Class 1, 1974 Edition with Winter 1975 Addenda requirements.
3) Eight (8) new replacement cap screws, SA-540 Gr. B23, Class 4, Heat No 56624, Heat (Trace) Code No OH50.
4) VT-1 visual examination Report No 3RPV-001 for the new replacement cap screws.

WOT No 01142671 53

ENERGY NORTHWEST
People · Vision · Solutions

FORM NIS-2 OWNER'S REPORT FOR REPAIR/REPLACEMENT ACTIVITY (Back)

8 Tests Conducted: Hydrostatic [ ] Pneumatic [ ] Nominal Operating Pressure [ ] Other [*]
Exempt [ ] Test Pressure: 1020 Psig Test Temperature: 165° F

9. Remarks (Applicable Manufacturer's Data Reports to be attached): 1) See attached N-2 Code Data Report for the replacement CRD assembly, Serial No A9309. 2) * Pressure test on the CRD bolted flanged connection - Test pressure of 1020 Psig and test temperature of 165° F recorded during ASME Section XI pressure test in accordance with PPM No OSP-RPV-R801 "Reactor Pressure Vessel Leakage Test".

CERTIFICATE OF COMPLIANCE

I certify that the statements made in this Owner's Report are correct and that this conforms to the requirements of the ASME Code, Section XI.
Type Code Symbol Stamp: Not Applicable
Certificate Of Authorization No.: Not Applicable
Expiration Date: Not Applicable

Prepared By Kuldip Singh — Kuldip Singh - Program Lead Engineer (PLE)
Signed By Kuldip Singh — Kuldip Singh - Program Lead Engineer (PLE)
Date 6/26/09 Date 6/26/09.

CERTIFICATE OF INSERVICE INSPECTION

I, the undersigned, holding a valid commission issued by the National Board of Boiler and Pressure Vessel Inspectors and the State of Washington *and employed by* Hartford Steam Boiler Of Connecticut of Hartford, Connecticut *have inspected the components described in this Owner's Report during the period* 4/1/2009 *to* 7/2/2009 *and state to the best of my knowledge and belief, the Owner has performed examinations and taken corrective measures described in this Owner's Report in accordance with the requirements of the ASME Code, Section XI.*
By signing this certificate neither the Inspector nor his employer makes any warranty, expressed or implied, concerning the examinations and corrective measures described in this Owner's Report. Furthermore, neither the Inspector nor his employer shall be liable in any manner for any personal injury or property damage or a loss of any kind arising from or connected with this inspection.

Inspector's Signature — Commissions 13172 WANI — National Board, State, and Endorsements

Date 7/2/2009

W07 No. 01142671 53

FORM N-2 NPT CERTIFICATE HOLDERS' DATA REPORT FOR NUCLE. . PART AND APPURTENANCES*

As required by the Provision of the ASME Code Rules, Section III, Div. I

1. Manufactured & Certified by : General Electric Company Nuclear Energy (GE-NE)

3901 Castle Hayne Road, Wilmington, North Carolina 28401

(Name and Address of NPT Certificate Holder)

Philip Smith 6/26/08.

(b) Manufactured for : WNP 2 Richland, Washington 99352

(Name and Address of N Certificate Holder for completed nuclear component)

2. Identification - Certificate Holder's S/N of Part : A9309 Nat'l Bd. No. N/A

(a) Constructed According to Drawing No: 919D258G003 Rev 18 Dwg. Prepared by D. L. Peterson

(b) Description of Part Inspected: Cylinder Tube & Flange

(c) Applicable ASME Code: Section III , Edition 1974 , Addenda Date W'75 , Case No. 1361-2 Class 1

3. REMARKS: Standard part for use with Reactor. Hydrostatically tested at 1825 psi. min.

(Brief description of service for which component was designed)

Sheet 1 of 2

We certify that the statements in this report are correct and this vessel part or appurtenance as defined in the code conforms to the rules of construction of the ASME Code Section III. (The applicable Designed Specification and Stress Report are not the responsibility of the NPT Certificate Holder for parts. An NPT Certification Holder for appurtenances is responsible for furnishing a separate Design Specification and Stress Report if the appurtenance is not included in the component Design Specification and Stress Report).

Date: 03/28/96 Signed GE-NE By C Bazzett

(NPT Certificate Holder) (SC QA Representive)

Certificate of Authorization Expires: 6/16/96 Certification of Authorization No. : NPT N - 1151

Certification of Design for Appurtenance

Design information on file at GE Company, San Jose, California

Stress analysis report on file at GE Company, San Jose, California

DC22A6253 Rev. 2
Design specification certified by B.N. Sridhar Prof. Eng. State Calif. Reg. No. 18345

DC22A6254 Rev 1
Stress analysis report certified by Edward Yoshio Prof. Eng. State Calif. Reg. No. M018646

Certification of Shop Inspection

I, the undersigned, holding a valid commission by the National Board of Boiler and Pressure Inspectors and/or the State or Province of North Carolina and employed by Department of Labor of State of North Carolina have inspected the part of a pressure vessel described in this Partial Data Report on 3-29-96, and state that to the best of my knowledge and belief, the NPT Certificate Holder has constructed this part in accordance with the ASME Code Section III.

By signing this certificate, neither the Inspector nor his employer makes any warranty, expressed or implied, concerning the part described in the Partial Data Report. Furthermore, neither the Inspector nor his employer shall be liable in any manner for any personal injury or property damages or a loss of any kind arising from or connected with this inspection.

3-29, 96 Thomas Fine NC 856

Date Inspector's Signature National Board, State, Province And No.

Supplemental sheets in form of lists, sketches or drawing may be used provided (1) size is 8-1/2" x 11", (2) information in 1-2 on this Data Report is included on each sheet, and (3) each sheet is numbered and number of sheets is recorded in Item 3. "REMARKS".

FORM N-2 (back)

Items 4-8 Incl. to be completed for single wall vessels, jackets vessels, or shells of heat exchangers.

4. Shell: Material _____ T.S. _____ Nominal Thickness ___ in. Corrosion Allowance ___ in. Dia. ___ ft. ___ in. Length ___ ft. ___ in.
(Kind & Spec. No.) (Min. of Range Specified)

5. Seams: Long _____ H.T.[1] _____ R.T. _____ Efficiency _____%
Girth _____ H.T.[1] _____ R.T. _____ No. of Courses _____

6. Heads: (a) Material _____ T.S. _____ (b) Material _____ T.S. _____

	Location (Top Bottom, Ends)	Thickness	Crown Radius	Knuckle Radius	Elliptical Ratio	Concial Apex Angle	Hemispherical Radius	Flat Diameter	Side to Press. (conv. or conc.)
(a)									
(b)									

If removable, bolts used _____ (Material, Spec. No., T.S. Size Number) Other fastening _____ (Describe or attach sketch)

7. Jacket Closure: _____
(Describe as ogee and weld, bar, etc. If bar give dimensions, if bolts, describe or sketch)

Drop Weight _____
Charpy Impact _____ ft-lb

8. Design pressure[2] 1250 psi at 575 °F at temp of _____ °F

Items 9 and 10 to be completed for tube sections

9. Tube Sheets: Stationary. Material _____ (Kind & Spec. No.) Dia. _____ (Subject to pressure) Thickness ___ in. Attachment _____ (Welded, Bolted)
Floating. Material _____ Dia. _____ Thickness ___ in. Attachment _____

10. Tubes: Material _____ O.D. _____ in. Thickness _____ Inches or gage. Number _____ Type _____ (Str. or U)

Items 11 - 14 incl. to be completed for inner chambers of jacketed vessels, or channels of heat exchangers.

11. Shell: Material _____ T.S. _____ Nominal Thickness ___ in. Corrosion Allowance ___ in. Dia. ___ ft. ___ in. Length ___ ft. ___ in.
(Kind & Spec. No.) (Min. of Range Specified)

12. Seams: Long _____ H.T.[1] _____ R.T. _____ Efficiency _____%
Girth _____ H.T.[1] _____ R.T. _____ No. of Courses _____

13. Heads: (a) Material _____ T.S. _____ (b) Material _____ T.S. _____

	Location	Thickness	Crown Radius	Knuckle Radius	Elliptical Ratio	Concial Apex Angle	Hemispherical Radius	Flat Diameter	Side to Press. (conv. or conc.)
(a)	Top, bottom, ends								
(b)	Channel								

If removable, bolts used (a)_____ (b)_____ (c)_____ Other fastening _____ (Describe or attach sketch)

Drop Weight _____
Charpy Impact _____ ft-lb

14. Design pressure[2] _____ psi at _____ °F at temp of _____ °F

Items below to be completed for all vessels where applicable.

15. Safety Valve Outlets: Number _____ Size _____ Location _____

16. Nozzles:

Purpose (Inlet, Outlet, Drain)	Number	Dia. or Size	Type	Material	Thickness	Reinforcement Material	How Attached

17. Inspection Openings: Manholes, No. _____ Size _____ Location _____
Handholes, No. _____ Size _____ Location _____
Threaded, No. _____ Size _____ Location _____

18. Supports: Skirt _____ (Yes or No) Lugs _____ (Number) Legs _____ (Number) Other _____ (Describe) Attached _____ (Where & How)

1 - If Postweld Heat Treated.
2 - List other internal or external pressure with coincident temperature when applicable.

WOT NO. 01142671 53

FORM N-2 NPT CERTIFICA' ,OLDERS' DATA REPORT FOR NUCLE/ 'ART AND APPURTENANCES*

As required by the Provision of the ASME Code Rule_, Section III, Div. I

1. Manufactured & Certified by : General Electric Company Nuclear Energy (GE-NE)

3901 Castle Hayne Road, Wilmington, North Carolina 28401

(Name and Address of NPT Certificate Holder)

(b) Manufactured for : WNP 2 Richland, Washington 99352

(Name and Address of N Certificate Holder for completed nuclear component)

2. Identification - Certificate Holder's S/N of Part : A9309 Nat'l Bd. No. N/A

(a) Constructed According to Drawing No: 919D258G003 Rev 18 Dwg. Prepared by D. L. Peterson

(b) Description of Part Inspected: Cylinder Tube & Flange

(c) Applicable ASME Code: Section III , Edition 1974 , Addenda Date W'75 , Case No. 1361-2 Class 1

3. REMARKS: Standard part for use with Reactor. Hydrostatically tested at 1825 psi. min.

(Brief description of service for which component was designed)

6/26/09.

Sheet 2 of 2

1. Cap 166B9274P001
   SA182 - F316
   3/8" thick x 1 1/16" OD

2. Indicator Tube 167B4908P001
   SA312 - TP316
   3/4" sch 40 - seamless pipe
   0.113" wall thickness
   1.065" max. dia.

3. Plug 159A1176P001
   SA182 - F304
   1/4" thick x 0.812" OD

4. Flange 919D610P001 (719E474)
   SA182 - F304
   3.37" thick x 9 5/8" OD

5. Head 129B3539P005
   SA182 - F304
   7/8" thick x 2.875" dia.

6. Ring Flange 114B5122P002
   SA182 - F304
   1" thick x 5.0" OD x 1.75" ID

7. Cap Screw 117C4516P002
   SA193 - B6
   6 ea. 1/2" dia. on 4 1/8" bolt circle

8. Plug 175A7961P001
   SA182 - F304
   0.38" thick x 1.307" dia.

9. Nut 114B5460P001
   XM - 19 SA479
   1 30" thick x 2.62" dia.

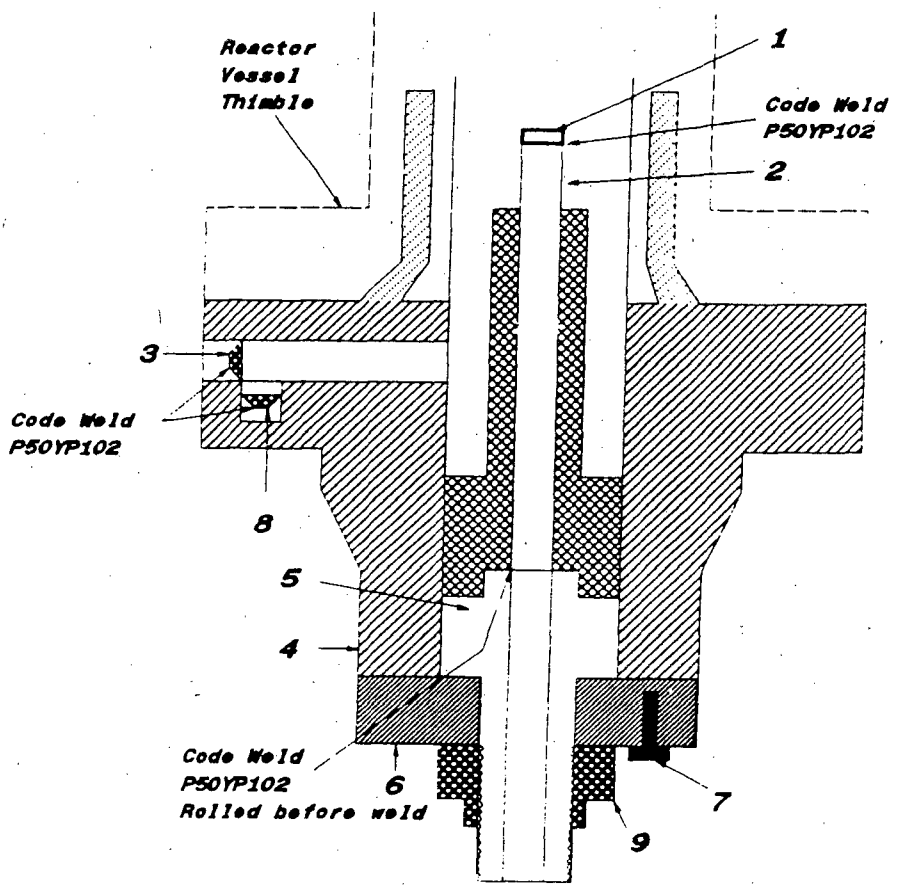

WOT No 01142671 54

ENERGY NORTHWEST
People · Vision · Solutions

FORM NIS-2 OWNER'S REPORT FOR REPAIR/REPLACEMENT ACTIVITY
As Required By The Provisions Of The ASME Code Section XI

1. Owner: Energy Northwest
Address: Columbia Generating Station, North Power Plant Loop, Richland, Washington, 99352
2. Plant: Columbia Generating Station
Address: Columbia Generating Station, North Power Plant Loop, Richland, Washington, 99352

Date: 06/26/2009
Sheet: 1 Of 1
Unit: Not Applicable

3. (a) Work Performed By: Energy Northwest
(b) Repair/Replacement Organization P.O. No, Job No, etc.: Energy Northwest
(c) Type Code Symbol Stamp: Not Applicable
(d) Certificate Of Authorization No.: Not Applicable
(e) Expiration Date: Not Applicable
4. Identification Of System: Control Rod Drive (CRD) System
5. (a) Applicable Construction Code: ASME Section III, Code Class 1, 1971 Edition with no Addenda, Code Case: Note 1
(b) Applicable Edition Of ASME Section XI Used For Repair/Replacement Activity: 2001 Edition with 2003 Addenda
(c) Applicable ASME Section XI Case(s): None
6. Identification Of Components

Name Of Component	Name Of Manufacturer	Manufacturer's Serial No	National Board No	Other I.D.	Year Built	Corrected, Removed Or Installed	ASME Code Stamped (Yes Or No) Code Class
CRD	GE	A8518	N/A	N/A	1987	Removed	Yes, Code Class 1
CRD	GE	7585A	N/A	N/A	1977	Installed	Yes, Code Class 1

7. Description Of Work Performed: Replaced Control Rod Drive (CRD) assembly at Core Location 46-43. The replacement work was performed in accordance with plant procedure PPM No 10.5.7 "Control Rod Drive Removal And Replacement" as follows:

1) Removed all eight (8) existing cap screws from the CRD assembly bolted flanged connection.
2) Removed existing CRD assembly, Serial No A8518.
3) Performed VT-1 visual examination on all eight (8) new replacement cap screws. VT-1 visual examination results acceptable.
4) Installed replacement CRD assembly, Serial No 7585A.
5) Installed eight (8) VT-1 visually examined new replacement cap screws for the CRD assembly bolted flanged connection.
6) Torqued the cap screws for the CRD assembly bolted flanged connection to the required torque values.
7) Performed VT-2 visual examination during pressure test on CRD assembly bolted flanged connection to confirm pressure boundary integrity of the joint. No leakage was observed during pressure test.

NOTES

1) The applicable ASME Code Cases, if any are listed on the ASME Code Data Reports.
2) The replacement CRD assembly, Serial No 7585A is certified to comply with ASME Section III, Code Class 1, 1971 Edition with no Addenda requirements.
3) Eight (8) new replacement cap screws, SA-540 Gr. B23, Class 4, Heat No 56624, Heat (Trace) Code No OH50.
4) VT-1 visual examination Report No 3RPV-001 for the new replacement cap screws.

WOT No 01142671 54

ENERGY NORTHWEST
People·Vision·Solutions

FORM NIS-2 OWNER'S REPORT FOR REPAIR/REPLACEMENT ACTIVITY (Back)

8 Tests Conducted: Hydrostatic ☐ Pneumatic ☐ Nominal Operating Pressure ☐ Other ☐ *
Exempt ☐ Test Pressure: 1020 Psig Test Temperature: 165° F

9. Remarks (Applicable Manufacturer's Data Reports to be attached): 1) See attached N-2 Code Data Report for the replacement CRD assembly, Serial No 7585A. 2) * Pressure test on the CRD bolted flanged connection - Test pressure of 1020 Psig and test temperature of 165° F recorded during ASME Section XI pressure test in accordance with PPM No OSP-RPV-R801 "Reactor Pressure Vessel Leakage Test".

CERTIFICATE OF COMPLIANCE

I certify that the statements made in this Owner's Report are correct and that this conforms to the requirements of the ASME Code, Section XI.
Type Code Symbol Stamp: Not Applicable
Certificate Of Authorization No.: Not Applicable
Expiration Date: Not Applicable

Prepared By Kuldip Singh — Kuldip Singh - Program Lead Engineer (PLE)
Date 6/26/09

Signed By Kuldip Singh — Kuldip Singh - Program Lead Engineer (PLE)
Date 6/26/09.

CERTIFICATE OF INSERVICE INSPECTION

I, the undersigned, holding a valid commission issued by the National Board of Boiler and Pressure Vessel Inspectors and the State of Washington *and employed by* Hartford Steam Boiler Of Connecticut of Hartford, Connecticut *have inspected the components described in this Owner's Report during the period* 4/1/2009 *to* 7/2/2009 *and state to the best of my knowledge and belief, the Owner has performed examinations and taken corrective measures described in this Owner's Report in accordance with the requirements of the ASME Code, Section XI.*
By signing this certificate neither the Inspector nor his employer makes any warranty, expressed or implied, concerning the examinations and corrective measures described in this Owner's Report. Furthermore, neither the Inspector nor his employer shall be liable in any manner for any personal injury or property damage or a loss of any kind arising from or connected with this inspection.

Inspector's Signature

Commissions 13172 WA NI
National Board, State, and Endorsements

Date 7/2/2009

WOT No. 01142671 54

FORM N-2 MANUFACTURERS DATA REPORT FOR NUCLEAR PART AND APPURTENANCES*

As required by the Provisions of the ASME Code Rules

1. (a) Manufactured by General Electric Co., Castle Hayne Rd., Wilmington, N.C. 6/26/09.
(Name and address of Manufacturer of part)

(b) Manufactured for General Electric Co., San Jose, California
(Name and address of Manufacturer of completed nuclear component)

2. Identification-Manufacturer's Serial No. of Part 7585A Nat'l Bd. No.

(a) Constructed According to Drawing No. 761E387G2 Drawing Prepared by D.L.Peterson

(b) Description of Part Inspected Control Rod Drive, Model #7RDB144B1

(c) Applicable ASME Code: Section III, Edition 1971, Addenda date NONE, Case No. 1361-1 Class 1

3. Remarks: Standard part for use with Reactor. Hydrostatically tested at
(Brief description of service for which component was designed)
1820 psi minimum.

We certify that the statements made in this report are correct and this vessel part or appurtenance as defined in the Code conforms to the rules of construction of the ASME Code Section III.
(The applicable Design Specification and Stress Report are not the responsibility of the part Manufacturer. An appurtenance Manufacturer is responsible for furnishing a separate Design Specification and Stress Report if the appurtenance is not included in the component Design Specification and Stress Report.)

Date August 17, 1977 Signed GE, APED MFG. (Manufacturer) By Charles F. Brewer

Certificate of Authorization Expires June 16, 1978 Certificate of Authorization No. NPT N1151

CERTIFICATION OF DESIGN FOR APPURTENANCE (when applicable)

Design information on file at General Electric Co., APED MFG., Castle Hayne Rd., Wil.

Stress analysis report on file at General Electric Co., APED MFG., Castle Hayne Rd., Wil.

Design specifications certified by Vernon W. Pence Prof. Eng. State Calif. Reg. No. 14488

Stress analysis report certified by Vernon W. Pence Prof. Eng. State Calif. Reg. No. 14488

CERTIFICATE OF SHOP INSPECTION

I, the undersigned, holding a valid commission issued by the National Board of Boiler and Pressure Vessel Inspectors and/or the State or Province of North Carolina and employed by Department of Labor of State of North Carolina have inspected the part of a pressure vessel described in this Manufacturer's Partial Data Report on August 17, 1977, and state that to the best of my knowledge and belief, the Manufacturer has constructed this part in accordance with the ASME Code Section III.

By signing this certificate, neither the Inspector nor his employer makes any warranty, expressed or implied, concerning the part described in this Manufacturer's Partial Data Report. Furthermore, neither the Inspector nor his employer shall be liable in any manner for any personal injury or property damage or a loss of any kind arising from or connected with this inspection.

Date August 17, 1977 AUG 12 1980

Inspector's Signature Commissions NC 723, PA.WC1766, Ohio
National Board, State, Province and No.

*Supplemental sheets in form of lists, sketches or drawings may be used provided (1) size is 8½" x 11", (2) information in Items 1-2 on this data report is included on each sheet, and (3) each sheet is numbered and number of sheets is recorded in Item 3, "Remarks".

Items 4–8 Incl. to be completed for single wall vessels, jackets of jacketed vessels, or shells of heat exchangers.

4. Shell: Material _____ (Kind & Spec. No.) T.S. _____ (Min. of Range Specified) Nominal Thickness ____ in. Corrosion Allowance ____ in. Dia. ____ ft. ____ in. Length ____ ft. ____ in.

5. Seams: Long _____ H.T.[1] _____ R.T. _____ Efficiency _____ %

Girth _____ H.T.[1] _____ R.T. _____ No. of Courses _____

6. Heads: (a) Material _____ T.S. _____ (b) Material _____ T.S. _____

Location (Top, bottom, ends)	Thickness	Crown Radius	Knuckle Radius	Elliptical Ratio	Conical Apex Angle	Hemispherical Radius	Flat Diameter	Side to Press. (Conv. or Conc.)
(a)								
(b)								

If removable, bolts used _____ (Material, Spec. No., T.S., Size, Number) Other fastening _____ (Describe or attach sketch)

7. Jacket Closure: _____ (Describe as ogee and weld, bar, etc. If bar give dimensions, if bolted, describe or sketch)

8. Design pressure[2] 1250 psi at 575 °F

Drop Weight _____
Charpy Impact _____ ft-lb
at temp. of _____ °F

Items 9 and 10 to be completed for tube sections

9. Tube Sheets: Stationary. Material _____ (Kind & Spec. No.) Dia. _____ (Subject to pressure) Thickness ____ in. Attachment _____ (Welded, Bolted)

Floating. Material _____ Dia. _____ Thickness ____ in. Attachment _____

10. Tubes: Material _____ O.D. ____ in. Thickness _____ inches or gage. Number _____ Type _____ (Str. or U)

Items 11–14 incl. to be completed for inner chambers of jacketed vessels, or channels of heat exchangers.

11. Shell: Material _____ (Kind & Spec. No.) T.S. _____ (Min. of Range Specified) Nominal Thickness ____ in. Corrosion Allowance ____ in. Dia. ____ ft. ____ in. Length ____ ft. ____ in.

12. Seams: Long _____ H.T.[1] _____ R.T. _____ Efficiency _____ %

Girth _____ H.T.[1] _____ R.T. _____ No. of Courses _____

13. Heads (a) Material _____ T.S. _____ (b) Material _____ T.S. _____

Location	Thickness	Crown Radius	Knuckle Radius	Elliptical Ratio	Conical Apex Angle	Hemispherical Radius	Flat Diameter	Side to Press. (Conv. or Conc.)
(a) Top, bottom, ends								
(b) Channel								

If removable, bolts used (a) _____ (b) _____ (c) _____ Other fastening _____ (Describe or attach sketch)

14. Design pressure[2] _____ psi at _____ °F

Drop Weight _____
Charpy Impact _____ ft-lb
at temp. of _____ °F

Items below to be completed for all vessels where applicable.

15. Safety Valve Outlets: Number _____ Size _____ Location _____

16. Nozzles:

Purpose (Inlet, Outlet, Drain)	Number	Dia. or Size	Type	Material	Thickness	Reinforcement Material	How Attached

AUG 12 1980

17. Inspection Openings: Manholes, No. _____ Size _____ Location _____
Handholes, No. _____ Size _____ Location _____
Threaded, No. _____ Size _____ Location _____

18. Supports: Skirt _____ (Yes or No) Lugs _____ (Number) Legs _____ (Number) Other _____ (Describe) Attached _____ (Where & How)

[1] If Postweld Heat-Treated.
[2] List other internal or external pressure with coinciden mperature when applicable.

WOT No. 01142671 54

CONTROL ROD DRIVE
761E387G1/G2

1. Cap 167A2343P1
   (167A2343)
   SA182-F304
   3/8 thick x 1 1/16 OD

2. Indicator Tube 104B1336P1
   SA312-TP316
   3/4 sch 40-seamless pipe
   0.113 wall thickness
   1.065 max. dia.

3. Plug 159A1176P1
   SA182-F304
   1/4 thick x 0.812 OD

4. Flange 919D610P1 (719E474)
   SA182-F304
   3.37 thick x 9 5/8 OD
   neck 1 1/16 thick x 5.0 OD
   2.875 ID

5. Head 129B3539P1
   SA182-F304
   7/8 thick x 2.875 Dia.

6. Ring Flange 114B5122P2
   SA182-F304
   1" thick x 5.0 OD x 1.75 ID

7. Cap Screw 117C4516P2
   SA193-B6
   6 ea. 1/2 dia. on 4 1/8 bolt circle

8. Plug 175A7961P1
   SA182-F304
   0.38 thick x 1.307 dia.

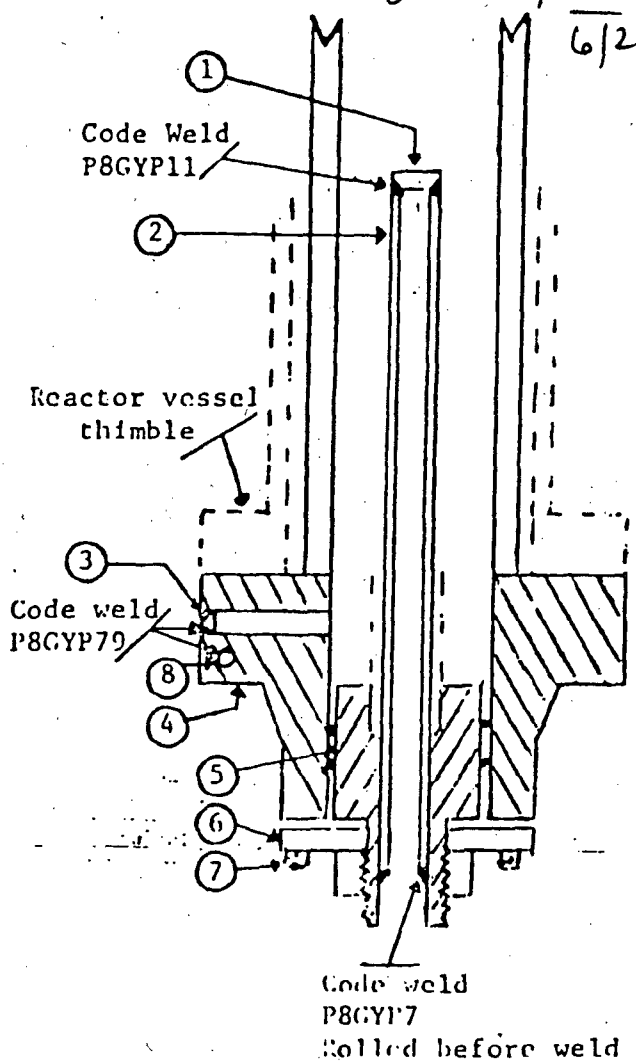

ATTACHMENT TO
FORM N-2 MANUFACTURER'S DATA REPORT

AUG 12 1980

WOT No 01142671 55

ENERGY NORTHWEST
People·Vision·Solutions

FORM NIS-2 OWNER'S REPORT FOR REPAIR/REPLACEMENT ACTIVITY
As Required By The Provisions Of The ASME Code Section XI

Date: 06/26/2009
Sheet: 1 Of 1
Unit: Not Applicable

1. **Owner:** Energy Northwest
   Address: Columbia Generating Station, North Power Plant Loop, Richland, Washington, 99352
2. **Plant:** Columbia Generating Station
   Address: Columbia Generating Station, North Power Plant Loop, Richland, Washington, 99352
3. (a) **Work Performed By:** Energy Northwest
   (b) **Repair/Replacement Organization P.O. No, Job No, etc.:** Energy Northwest
   (c) **Type Code Symbol Stamp:** Not Applicable
   (d) **Certificate Of Authorization No.:** Not Applicable
   (e) **Expiration Date:** Not Applicable
4. **Identification Of System:** Control Rod Drive (CRD) System
5. (a) **Applicable Construction Code:** ASME Section III, Code Class 1, 1974 Edition with Winter 1975 Addenda, Code Case: Note 1
   (b) **Applicable Edition Of ASME Section XI Used For Repair/Replacement Activity:** 2001 Edition with 2003 Addenda
   (c) **Applicable ASME Section XI Case(s):** None
6. **Identification Of Components**

Name Of Component	Name Of Manufacturer	Manufacturer's Serial No	National Board No	Other I.D.	Year Built	Corrected, Removed Or Installed	ASME Code Stamped (Yes Or No) Code Class
CRD	GE	6282	N/A	N/A	1975	Removed	Yes, Code Class 1
CRD	GE	A9313	N/A	N/A	1996	Installed	Yes, Code Class 1

7. **Description Of Work Performed:** Replaced Control Rod Drive (CRD) assembly at Core Location 50-11. The replacement work was performed in accordance with plant procedure PPM No 10.5.7 "Control Rod Drive Removal And Replacement" as follows:

1) Removed all eight (8) existing cap screws from the CRD assembly bolted flanged connection.
2) Removed existing CRD assembly, Serial No 6282.
3) Performed VT-1 visual examination on all eight (8) new replacement cap screws. VT-1 visual examination results acceptable.
4) Installed replacement CRD assembly, Serial No A9313.
5) Installed eight (8) VT-1 visually examined new replacement cap screws for the CRD assembly bolted flanged connection.
6) Torqued the cap screws for the CRD assembly bolted flanged connection to the required torque values.
7) Performed VT-2 visual examination during pressure test on CRD assembly bolted flanged connection to confirm pressure boundary integrity of the joint. Leakage was observed during pressure test and was evaluated to be acceptable.

NOTES

1) The applicable ASME Code Cases, if any are listed on the ASME Code Data Reports.
2) The replacement CRD assembly, Serial No A9313 is certified to comply with ASME Section III, Code Class 1, 1974 Edition with Winter 1975 Addenda requirements.
3) Eight (8) new replacement cap screws, SA-540 Gr. B23, Class 4, Heat No 56624, Heat (Trace) Code No OH50.
4) VT-1 visual examination Report No 3RPV-001 for the new replacement cap screws.

WOT No 01142671 55

ENERGY NORTHWEST
People · Vision · Solutions

FORM NIS-2 OWNER'S REPORT FOR REPAIR/REPLACEMENT ACTIVITY (Back)

8 Tests Conducted: Hydrostatic [ ] Pneumatic [ ] Nominal Operating Pressure [ ] Other [ ]
Exempt [ ] **Test Pressure:** 1020 Psig **Test Temperature:** 165° F

9. Remarks (Applicable Manufacturer's Data Reports to be attached): 1) See attached N-2 Code Data Report for the replacement CRD assembly, Serial No A9313. 2) * Pressure test on the CRD bolted flanged connection - Test pressure of 1020 Psig and test temperature of 165° F recorded during ASME Section XI pressure test in accordance with PPM No OSP-RPV-R801 "Reactor Pressure Vessel Leakage Test".

CERTIFICATE OF COMPLIANCE

I certify that the statements made in this Owner's Report are correct and that this conforms to the requirements of the ASME Code, Section XI.
Type Code Symbol Stamp: Not Applicable
Certificate Of Authorization No.: Not Applicable
Expiration Date: Not Applicable

Prepared By Kuldip Singh - Program Lead Engineer (PLE) **Signed By** Kuldip Singh - Program Lead Engineer (PLE)

Date 6/26/09 **Date** 6/26/09

CERTIFICATE OF INSERVICE INSPECTION

I, the undersigned, holding a valid commission issued by the National Board of Boiler and Pressure Vessel Inspectors and the State of Washington *and employed by* Hartford Steam Boiler Of Connecticut of Hartford, Connecticut *have inspected the components described in this Owner's Report during the period* 4/1/2009 *to* 7/2/2009 *and state to the best of my knowledge and belief, the Owner has performed examinations and taken corrective measures described in this Owner's Report in accordance with the requirements of the ASME Code, Section XI.*
By signing this certificate neither the Inspector nor his employer makes any warranty, expressed or implied, concerning the examinations and corrective measures described in this Owner's Report. Furthermore, neither the Inspector nor his employer shall be liable in any manner for any personal injury or property damage or a loss of any kind arising from or connected with this inspection.

Inspector's Signature **Commissions** 13172 WANI
National Board, State, and Endorsements

Date 7/2/2009

W07 NO. 01142671 55

FORM N-2 NPT CERTIFICATE HOLDERS' DATA REPORT FOR NUCLEAR PART AND APPURTENANCES*

As required by the Provision of the ASME Code Rules, Section III, Div. I

Philip Smith 6/26/08.

1. Manufactured & Certified by : General Electric Company Nuclear Energy (GE-NE)

   3901 Castle Hayne Road, Wilmington, North Carolina 28401

   (Name and Address of NPT Certificate Holder)

   (b) Manufactured for : WNP 2 Richland, Washington 99352

   (Name and Address of N Certificate Holder for completed nuclear component)

2. Identification - Certificate Holder's S/N of Part : A9313 Nat'l Bd. No. N/A

   (a) Constructed According to Drawing No: 919D258G003 Rev 18 Dwg. Prepared by D. L. Peterson

   (b) Description of Part Inspected: Cylinder Tube & Flange

   (c) Applicable ASME Code: Section III , Edition 1974 , Addenda Date W'75 , Case No. 1361-2 Class 1

3. REMARKS: Standard part for use with Reactor. Hydrostatically tested at 1825 psi. min.

   (Brief description of service for which component was designed)

Sheet 1 of 2

We certify that the statements in this report are correct and this vessel part or appurtenance as defined in the code conforms to the rules of construction of the ASME Code Section III. (The applicable Designed Specification and Stress Report are not the responsibility of the NPT Certificate Holder for parts. An NPT Certification Holder for appurtenances is responsible for furnishing a separate Design Specification and Stress Report if the appurtenance is not included in the component Design Specification and Stress Report).

Date: 03/28/96 Signed GE-NE (NPT Certificate Holder) By CBazzet (SC QA Representive)

Certificate of Authorization Expires: 6/16/96 Certification of Authorization No. : NPT N - 1151

Certification of Design for Appurtenance

Design information on file at GE Company, San Jose, California

Stress analysis report on file at GE Company, San Jose, California

DC22A6253 Rev. 2
Design specification certified by B.N. Sridhar Prof. Eng. State Calif. Reg. No. 18345

DC22A6254 Rev 1
Stress analysis report certified by Edward Yoshio Prof. Eng. State Calif. Reg. No. M018646

Certification of Shop Inspection

I, the undersigned, holding a valid commission by the National Board of Boiler and Pressure Inspectors and/or the State or Province of North Carolina and employed by Department of Labor of State of North Carolina have inspected the part of a pressure vessel described in this Partial Data Report on 3/29, 96, and state that to the best of my knowledge and belief, the NPT Certificate Holder has constructed this part in accordance with the ASME Code Section III.

By signing this certificate, neither the Inspector nor his employer makes any warranty, expressed or implied, concerning the part described in the Partial Data Report. Furthermore, neither the Inspector nor his employer shall be liable in any manner for any personal injury or property damages or a loss of any kind arising from or connected with this inspection.

3/29/ 96 Thomas Fine NC 856

Date Inspector's Signature National Board, State, Province And No.

*Supplemental sheets in form of lists, sketches or drawing may be used provided (1) size is 8-1/2" x 11", (2) information in 1-2 on this Data Report is included on each sheet, and (3) each sheet is numbered and number of sheets is recorded in Item 3. "REMARKS".

(27/96)

FORM N-2 (back)

Items 4-8 Incl. to be completed for single wall vessels, jackets vessels, or shells of heat exchangers.

4. Shell: Material _____ T.S. _____ Nominal Thickness ___ in. Corrosion Allowance ___ in. Dia. ___ ft. ___ in. Length ___ ft. ___ in.
(Kind & Spec. No.) (Min. of Range Specified)

5. Seams: Long _____ H.T.[1] _____ R.T. _____ Efficiency _____%
Girth _____ H.T.[1] _____ R.T. _____ No. of Courses _____

6. Heads: (a) Material _____ T.S. _____ (b) Material _____ T.S. _____

	Location (Top Bottom, Ends)	Thickness	Crown Radius	Knuckle Radius	Elliptical Ratio	Concial Apex Angle	Hemispherical Radius	Flat Diameter	Side to Press. (conv. or conc.)
(a)									
(b)									

If removable, bolts used _____ (Material, Spec. No., T.S. Size Number) Other fastening _____ (Describe or attach sketch)

7. Jacket Closure: _____
(Describe as ogee and weld, bar, etc. If bar give dimensions, if bolts, describe or sketch)

Drop Weight _____
Charpy Impact _____ ft-lb

8. Design pressure[2] 1250 psi at 575 °F at temp of _____ °F

Items 9 and 10 to be completed for tube sections

9. Tube Sheets: Stationary. Material _____ (Kind & Spec. No.) Dia. _____ (Subject to pressure) Thickness ___ in. Attachment _____ (Welded, Bolted)
Floating. Material _____ Dia. _____ Thickness ___ in. Attachment _____

10. Tubes: Material _____ O.D. _____ in. Thickness _____ inches or gage. Number _____ Type _____ (Str. or U)

Items 11 - 14 incl. to be completed for inner chambers of jacketed vessels, or channels of heat exchangers.

11. Shell: Material _____ T.S. _____ Nominal Thickness ___ in. Corrosion Allowance ___ in. Dia. ___ ft. ___ in. Length ___ ft. ___ in.
(Kind & Spec. No.) (Min. of Range Specified)

12. Seams: Long _____ H.T.[1] _____ R.T. _____ Efficiency _____%
Girth _____ H.T.[1] _____ R.T. _____ No. of Courses _____

13. Heads: (a) Material _____ T.S. _____ (b) Material _____ T.S. _____

	Location	Thickness	Crown Radius	Knuckle Radius	Elliptical Ratio	Concial Apex Angle	Hemispherical Radius	Flat Diameter	Side to Press. (conv. or conc.)
(a)	Top, bottom, ends								
(b)	Channel								

If removable, bolts used (a)_____ (b)_____ (c)_____ Other fastening _____ (Describe or attach sketch)

Drop Weight _____
Charpy Impact _____ ft-lb

14. Design pressure[2] _____ psi at _____ °F at temp of _____ °F

Items below to be completed for all vessels where applicable.

15. Safety Valve Outlets: Number _____ Size _____ Location _____

16. Nozzles:

Purpose (Inlet, Outlet, Drain)	Number	Dia. or Size	Type	Material	Thickness	Reinforcement Material	How Attached

17. Inspection Openings: Manholes, No. _____ Size _____ Location _____
Handholes, No. _____ Size _____ Location _____
Threaded, No. _____ Size _____ Location _____

18. Supports: Skirt _____ (Yes or No) Lugs _____ (Number) Legs _____ (Number) Other _____ (Describe) Attached _____ (Where & How)

[1] Postweld Heat-Treated.

[2] List other internal or external pressure with coincident temperature when applicable.

WO7 No. 01142671 55

FORM N-2 NPT CERTIFICA .HOLDERS' DATA REPORT FOR NUCLE PART AND APPURTENANCES*
As required by the Provision of the ASME Code Rules, Section III, Div. I

Philip Simb 6/26/09

1. Manufactured & Certified by : General Electric Company Nuclear Energy (GE-NE)
3901 Castle Hayne Road, Wilmington, North Carolina 28401
(Name and Address of NPT Certificate Holder)

(b) Manufactured for : WNP 2 Richland, Washington 99352
(Name and Address of N Certificate Holder for completed nuclear component)

2. Identification - Certificate Holder's S/N of Part : A9313 Nat'l Bd. No. N/A

(a) Constructed According to Drawing No: 919D258G003 Rev 18 Dwg. Prepared by D. L. Peterson

(b) Description of Part Inspected: Cylinder Tube & Flange

(c) Applicable ASME Code: Section III , Edition 1974 , Addenda Date W'75 , Case No. 1361-2 Class 1

3. REMARKS: Standard part for use with Reactor. Hydrostatically tested at 1825 psi. min.
(Brief description of service for which component was designed)

Sheet 2 of 2

1. Cap 166B9274P001
SA182 - F316
3/8" thick x 1 1/16" OD

2. Indicator Tube 167B4908P001
SA312 - TP316
3/4" sch 40 - seamless pipe
0.113" wall thickness
1.065" max. dia.

3. Plug 159A1176P001
SA182 - F304
1/4" thick x 0.812" OD

4. Flange 919D610P001 (719E474)
SA182 - F304
3.37" thick x 9 5/8" OD

5. Head 129B3539P005
SA182 - F304
7/8" thick x 2.875" dia.

6. Ring Flange 114B5122P002
SA182 - F304
1" thick x 5.0" OD x 1.75" ID

7. Cap Screw 117C4516P002
SA193 - B6
6 ea. 1/2" dia. on 4 1/8" bolt circle

8. Plug 175A7961P001
SA182 - F304
0.38" thick x 1.307" dia.

9. Nut 114B5460P001
XM - 19 SA479
1.30" thick x 2.62" dia.

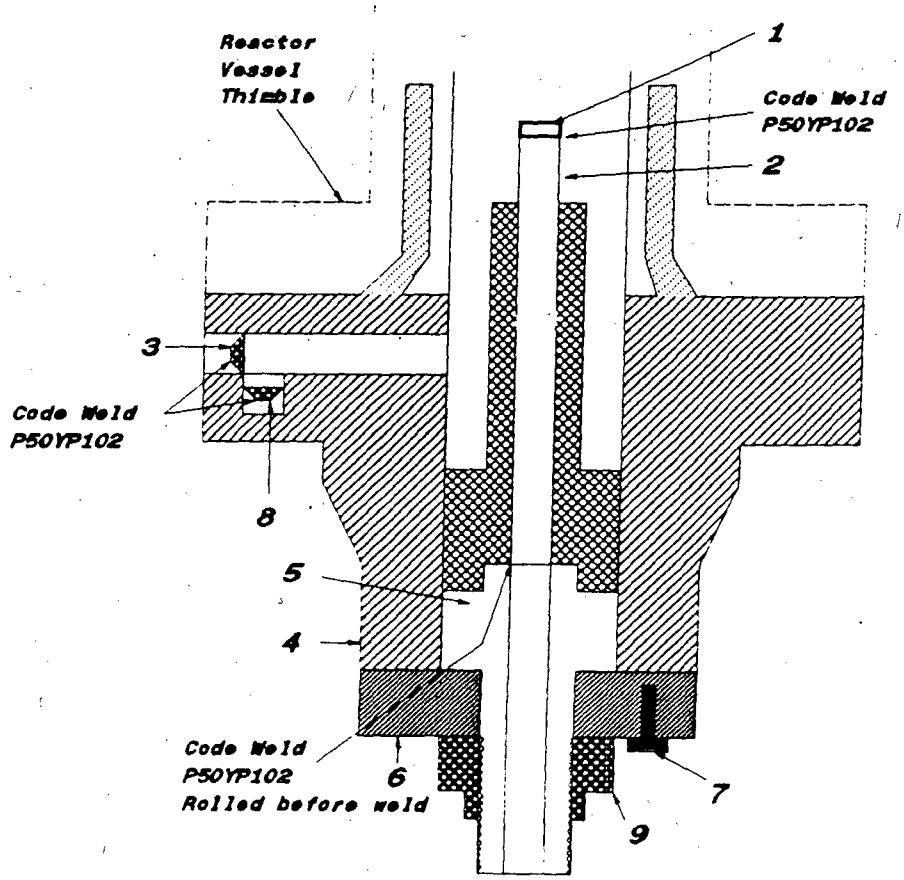

WOT No 01142671 56

ENERGY NORTHWEST
People · Vision · Solutions

FORM NIS-2 OWNER'S REPORT FOR REPAIR/REPLACEMENT ACTIVITY
As Required By The Provisions Of The ASME Code Section XI

1. Owner: Energy Northwest
Address: Columbia Generating Station, North Power Plant Loop, Richland, Washington, 99352
2. Plant: Columbia Generating Station
Address: Columbia Generating Station, North Power Plant Loop, Richland, Washington, 99352

Date: 06/26/2009
Sheet: 1 Of 1
Unit: Not Applicable

3. (a) Work Performed By: Energy Northwest
(b) Repair/Replacement Organization P.O. No, Job No, etc.: Energy Northwest
(c) Type Code Symbol Stamp: Not Applicable
(d) Certificate Of Authorization No.: Not Applicable
(e) Expiration Date: Not Applicable
4. Identification Of System: Control Rod Drive (CRD) System
5. (a) Applicable Construction Code: ASME Section III, Code Class 1, 1971 Edition with no Addenda, Code Case: Note 1
(b) Applicable Edition Of ASME Section XI Used For Repair/Replacement Activity: 2001 Edition with 2003 Addenda
(c) Applicable ASME Section XI Case(s): None
6. Identification Of Components

Name Of Component	Name Of Manufacturer	Manufacturer's Serial No	National Board No	Other I.D.	Year Built	Corrected, Removed Or Installed	ASME Code Stamped (Yes Or No) Code Class
CRD	GE	A8508	N/A	N/A	1987	Removed	Yes, Code Class 1
CRD	GE	6535	N/A	N/A	1974	Installed	Yes, Code Class 1

7. Description Of Work Performed: Replaced Control Rod Drive (CRD) assembly at Core Location 54-15. The replacement work was performed in accordance with plant procedure PPM No 10.5.7 "Control Rod Drive Removal And Replacement" as follows:

1) Removed all eight (8) existing cap screws from the CRD assembly bolted flanged connection.
2) Removed existing CRD assembly, Serial No A8508.
3) Performed VT-1 visual examination on all eight (8) new replacement cap screws. VT-1 visual examination results acceptable.
4) Installed replacement CRD assembly, Serial No 6535.
5) Installed eight (8) VT-1 visually examined new replacement cap screws for the CRD assembly bolted flanged connection.
6) Torqued the cap screws for the CRD assembly bolted flanged connection to the required torque values.
7) Performed VT-2 visual examination during pressure test on CRD assembly bolted flanged connection to confirm pressure boundary integrity of the joint. No leakage was observed during pressure test.

NOTES -

1) The applicable ASME Code Cases, if any are listed on the ASME Code Data Reports.
2) The replacement CRD assembly, Serial No 6535 is certified to comply with ASME Section III, Code Class 1, 1971 Edition with no Addenda requirements.
3) Eight (8) new replacement cap screws, SA-540 Gr. B23, Class 4, Heat No 56624, Heat (Trace) Code No OH50.
4) VT-1 visual examination Report No 3RPV-001 for the new replacement cap screws.

WOT No 01142671 56

ENERGY NORTHWEST
People · Vision · Solutions

FORM NIS-2 OWNER'S REPORT FOR REPAIR/REPLACEMENT ACTIVITY (Back)

8 Tests Conducted: Hydrostatic ☐ **Pneumatic** ☐ **Nominal Operating Pressure** ☐ **Other** ☐
Exempt ☐ **Test Pressure:** 1020 Psig **Test Temperature:** 165° F

9. Remarks (Applicable Manufacturer's Data Reports to be attached): 1) See attached N-2 Code Data Report for the replacement CRD assembly, Serial No 6535. 2) * Pressure test on the CRD bolted flanged connection - Test pressure of 1020 Psig and test temperature of 165° F recorded during ASME Section XI pressure test in accordance with PPM No OSP-RPV-R801 "Reactor Pressure Vessel Leakage Test".

CERTIFICATE OF COMPLIANCE

I certify that the statements made in this Owner's Report are correct and that this conforms to the requirements of the ASME Code, Section XI.
Type Code Symbol Stamp: Not Applicable
Certificate Of Authorization No.: Not Applicable
Expiration Date: Not Applicable

Prepared By Kuldip Singh — Kuldip Singh - Program Lead Engineer (PLE)
Signed By Kuldip Singh — Kuldip Singh - Program Lead Engineer (PLE)

Date 6/26/09 ***Date*** 6/26/09.

CERTIFICATE OF INSERVICE INSPECTION

I, the undersigned, holding a valid commission issued by the National Board of Boiler and Pressure Vessel Inspectors and the State of Washington ***and employed by*** Hartford Steam Boiler Of Connecticut of Hartford, Connecticut ***have inspected the components described in this Owner's Report during the period*** 4/1/2009 ***to*** 7/2/2009 ***and state to the best of my knowledge and belief, the Owner has performed examinations and taken corrective measures described in this Owner's Report in accordance with the requirements of the ASME Code, Section XI.***
By signing this certificate neither the Inspector nor his employer makes any warranty, expressed or implied, concerning the examinations and corrective measures described in this Owner's Report. Furthermore, neither the Inspector nor his employer shall be liable in any manner for any personal injury or property damage or a loss of any kind arising from or connected with this inspection.

Inspector's Signature — ***Commissions*** 13172 WAHI
National Board, State, and Endorsements

Date 7/2/2009

WOT NO 01142671 56

FORM N-2 MANUFACTURERS DATA REPORT FOR NUCLEAR PART AND APPURTENANCES

As required by the Provisions of the ASME Code Rules

Philip Smith 6/26/07

1. (a) Manufactured by General Electric Company, Castle Hayne Rd., Wilmington, N. C.
(Name and address of Manufacturer of part)

(b) Manufactured for General Electric Company, San Jose, California
(Name and address of Manufacturer of completed nuclear component)

2. Identification-Manufacturer's Serial No. of Part 6535 Nat'l Bd. No.

(a) Constructed According to Drawing No. 761E387G2 Drawing Prepared by D. L. Peterson

(b) Description of Part Inspected Control Rod Drive, Model #7RDB144 C1

(c) Applicable ASME Code: Section III, Edition 1971, Addenda date None, Case No. 1361-1 Class 1

3. Remarks: Standard part for use with Reactor. Hydrostatically tested at 1820 psi minimum.
(Brief description of service for which component was designed)

FOR INFORMATION ONLY

We certify that the statements made in this report are correct and this vessel part or appurtenance as defined in the Code conforms to the rules of construction of the ASME Code Section III.
(The applicable Design Specification and Stress Report are not the responsibility of the part Manufacturer. An appurtenance Manufacturer is responsible for furnishing a separate Design Specification and Stress Report if the appurtenance is not included in the component Design Specification and Stress Report.)

Date November 11 19 74 Signed GE, BWRSD - REM (Manufacturer) By Wm. J. Hendler

Certificate of Authorization Expires June 20, 1975 Certificate of Authorization No. NPT - 462

CERTIFICATION OF DESIGN FOR APPURTENANCE (when applicable)

Design information on file at General Electric Co., BWRSD-REM, Castle Hayne Rd., Wilmington

Stress analysis report on file at General Electric Co., BWRSD-REM, Castle Hayne Rd., Wilmington

Design specifications certified by Vernon W. Pence Prof. Eng. State Calif. Reg. No. 14488

Stress analysis report certified by Vernon W. Pence Prof. Eng. State Calif. Reg. No. 14488

CERTIFICATE OF SHOP INSPECTION

I, the undersigned, holding a valid commission issued by the National Board of Boiler and Pressure Vessel Inspectors and/or the State or Province of North Carolina and employed by Department of Labor of State of North Carolina have inspected the part of a pressure vessel described in this Manufacturer's Partial Data Report on November 11 19 74, and state that to the best of my knowledge and belief, the Manufacturer has constructed this part in accordance with the ASME Code Section III.

By signing this certificate, neither the Inspector nor his employer makes any warranty, expressed or implied, concerning the part described in this Manufacturer's Partial Data Report. Furthermore, neither the Inspector nor his employer shall be liable in any manner for any personal injury or property damage or a loss of any kind arising from or connected with this inspection.

Date November 11 19 74.

E R Shenill
Inspector's Signature

Commissions NC 723, PA. PC 1766, Ohio
National Board, State, Province and No.

ZX00367301

761E387G002
6535

FORM N-2 (back)

Items 4–8 incl. to be completed for single wall vessels, jackets of jacketed vessels, or shells of heat exchangers.

4. Shell: Material ____ (Kind & Spec. No.) ____ T.S. ____ (Min. of Range Specified) Nominal Thickness ____ in. Corrosion Allowance ____ in. Dia. ____ ft. ____ in. Length ____ ft. ____ in.

5. Seams: Long ____ H.T.[1] ____ R.T. ____ Efficiency ____ %

Girth ____ H.T.[1] ____ R.T. ____ No. of Courses ____

6. Heads: (a) Material ____ T.S. ____ (b) Material ____ T.S. ____

Location (Top, bottom, ends)	Thickness	Crown Radius	Knuckle Radius	Elliptical Ratio	Conical Apex Angle	Hemispherical Radius	Flat Diameter	Side to Press. (Conv. or Conc.)
(a)								
(b)								

If removable, bolts used ____ (Material, Spec. No., T.S., Size, Number) Other fastening ____ (Describe or attach sketch)

7. Jacket Closure: ____ (Describe as edges and weld, bar, etc. If bar give dimensions, if bolted, describe or sketch.)

8. Design pressure[2] 1250 psi at 575 °F

Drop Weight ____
Charpy Impact ____ ft-lb.
at temp. of ____ °F

FOR INFORMATION ONLY

Items 9 and 10 to be completed for tube sections

9. Tube Sheets: Stationary. Material ____ (Kind & Spec. No.) Dia. ____ (Subject to pressure) Thickness ____ in. Attachment ____ (Welded, Bolted)

Floating. Material ____ Dia. ____ Thickness ____ in. Attachment ____

10. Tubes: Material ____ O.D. ____ in. Thickness ____ inches or gage. Number ____ Type ____ (Str. or U)

Items 11–14 incl. to be completed for inner chambers of jacketed vessels, or channels of heat exchangers.

11. Shell: Material ____ (Kind & Spec. No.) T.S. ____ (Min. of Range Specified) Nominal Thickness ____ in. Corrosion Allowance ____ in. Dia. ____ ft. ____ in. Length ____ ft. ____ in.

12. Seams: Long ____ H.T.[1] ____ R.T. ____ Efficiency ____ %

Girth ____ H.T.[1] ____ R.T. ____ No. of Courses ____

13. Heads (a) Material ____ T.S. ____ (b) Material ____ T.S. ____

Location	Thickness	Crown Radius	Knuckle Radius	Elliptical Ratio	Conical Apex Angle	Hemispherical Radius	Flat Diameter	Side to Press. (Conv. or Conc.)
(a) Top, bottom, ends								
(b) Channel								

If removable, bolts used (a) ____ (b) ____ (c) ____ Other fastening ____ (Describe or attach sketch)

14. Design pressure[2] ____ psi at ____ °F

Drop Weight ____
Charpy Impact ____ ft-lb
at temp. of ____ °F

Items below to be completed for all vessels where applicable.

15. Safety Valve Outlets: Number ____ Size ____ Location ____

16. Nozzles:

Purpose (Inlet, Outlet, Drain)	Number	Dia. or Size	Type	Material	Thickness	Reinforcement Material	How Attached

17. Inspection Openings: Manholes, No. ____ Size ____ Location ____
Handholes, No. ____ Size ____ Location ____
Threaded, No. ____ Size ____ Location ____

ZX00367302

18. Supports: Skirt ____ (Yes or No) Lugs ____ (Number) Legs ____ (Number) Other ____ (Describe) Attached ____ (Where & How)

[1] If Postweld Heat-Treated.
[2] Internal or external pressure with coincident temperature when applicable.