Westinghouse

Westinghouse Electric Company
Nuclear Power Plants
P.O. Box 355
Pittsburgh, Pennsylvania 15230-0355
USA

U.S. Nuclear Regulatory Commission
ATTENTION: Document Control Desk
Washington, D.C. 20555

Direct tel: 412-374-6206
Direct fax: 724-940-8505
e-mail: sisk1rb@westinghouse.com

Your ref: Docket No. 52-006
Our ref: DCP_NRC_002643

October 2, 2009

Subject: AP1000 Response to Request for Additional Information (SRP 9)

Westinghouse is submitting a response to the NRC request for additional information (RAI) on SRP Section 9. This RAI response is submitted in support of the AP1000 Design Certification Amendment Application (Docket No. 52-006). The information included in this response is generic and is expected to apply to all COL applications referencing the AP1000 Design Certification and the AP1000 Design Certification Amendment Application.

Enclosure 1 provides the response for the following RAI(s):

RAI-SRP9.1.3-SBPA-11

Questions or requests for additional information related to the content and preparation of this response should be directed to Westinghouse. Please send copies of such questions or requests to the prospective applicants for combined licenses referencing the AP1000 Design Certification. A representative for each applicant is included on the cc: list of this letter.

Very truly yours,

Robert Sisk, Manager
Licensing and Customer Interface
Regulatory Affairs and Standardization

/Enclosure

1. Response to Request for Additional Information on SRP Section 9

D063
NRO

cc:	D. Jaffe	-	U.S. NRC	1E
	E. McKenna	-	U.S. NRC	1E
	P. Donnelly	-	U.S. NRC	1E
	T. Spink	-	TVA	1E
	P. Hastings	-	Duke Power	1E
	R. Kitchen	-	Progress Energy	1E
	A. Monroe	-	SCANA	1E
	P. Jacobs	-	Florida Power & Light	1E
	C. Pierce	-	Southern Company	1E
	E. Schmiech	-	Westinghouse	1E
	G. Zinke	-	NuStart/Entergy	1E
	R. Grumbir	-	NuStart	1E
	P. Loza	-	Westinghouse	1E

ENCLOSURE 1

Response to Request for Additional Information on SRP Section 9

AP1000 TECHNICAL REPORT REVIEW

Response to Request For Additional Information (RAI)

RAI Response Number: RAI-SRP9.1.3-SBPA-11
Revision: 0

Question:

In the AP1000 DCD, Revision 17, Section 9.1.3.7.D, the description of main control room alarms was changed. In DCD Revision 15 and 16, the description says that safety-related instrumentation is provided to give an alarm in the main control room when the water level in the spent fuel pool (SFP) reaches either the high level or low level setpoint. In DCD Revision 17, the description says that safety-related instrumentation is provided to give an alarm in the main control room when the water level in the spent fuel pool reaches the low-low-level setpoint.

The staff requests that the applicant:

a) Provide the basis in the DCD for the safety-related level instrumentation change.

b) Clarify in the DCD whether any main control room or local alarms are available to give an alarm on high level or on low level setpoints in the SFP, as previously described in AP1000 DCD, Revision 15.

c) Justify in the DCD how the change in SFP level alarms impacts any previously performed safety evaluations or operator response evaluations.

Westinghouse Response:

The AP1000 DCD will show that a non-safety related level transmitter is used for the high and low pool setpoints. Listed below are all of the pool setpoints.

a) The spent fuel pool has three main setpoints:

- High – Maximum Normal Pool Level. (located on the non-safety related level transmitter)
- Low – Minimum Normal Pool Level. This setpoint also translates to the minimum water level for achieving the ALARA goals associated with the movement of fuel. (Located on the non-safety related level transmitter)
- Low/Low – Tech spec limit. (Located on the safety related instruments)

The only setpoint necessary for safety remains the low/low setpoint for safety-related sensors (LT019A/B/C). The non-safety setpoints that were previously located on the safety-related sensors were moved to the non-safety related narrow range instrument

(LT025), such that pool levels for normal operation can be maintained with a high level of accuracy.

b) The basis provided in part a) describes how the high and low level setpoints are arranged on the non-safety related level instrument (LT025).

c) The alarms for high, low, and low-low all exist. The safety-related setpoint has not changed and remains on the safety-related sensors. Therefore, no previously performed safety evaluations are affected. The non-safety related setpoints are now on the non-safety related level instrument (LT025).

Reference(s): None

Design Control Document (DCD) Revision:

Revise DCD Tier 2, Section 9.1.3.7 as follows:

D. Level

Safety-related instrumentation is provided to give an alarm in the main control room when the water level in the spent fuel pool reaches the low-low-level setpoint. This instrumentation is used for post-accident monitoring on the spent fuel pool level. (See Table 7.5-1)

Non-safety-related instrumentation is provided to give an alarm in the main control room when the water level in the spent fuel pool and the cask loading pit reaches either the high-level or low-level setpoint. Instrumentation in the spent fuel pool is used to alert the operator that the pool is nearing limits for fuel movement. Instrumentation in the cask loading pit is used to alert the operator to a low level when injecting water from the pit into the reactor coolant system with the normal residual heat removal pumps.

Revise DCD Tier 2, Figure 9.1-6 (sheet 1 of 2) as shown:

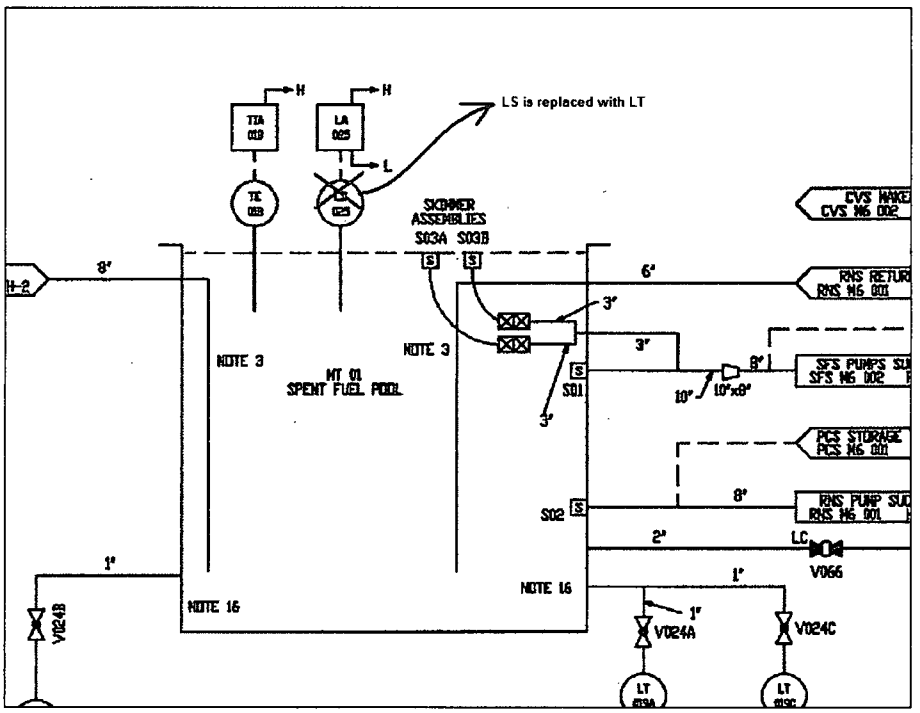

PRA Revision: None

Technical Report (TR) Revision: None