5 SHIELDING EVALUATION

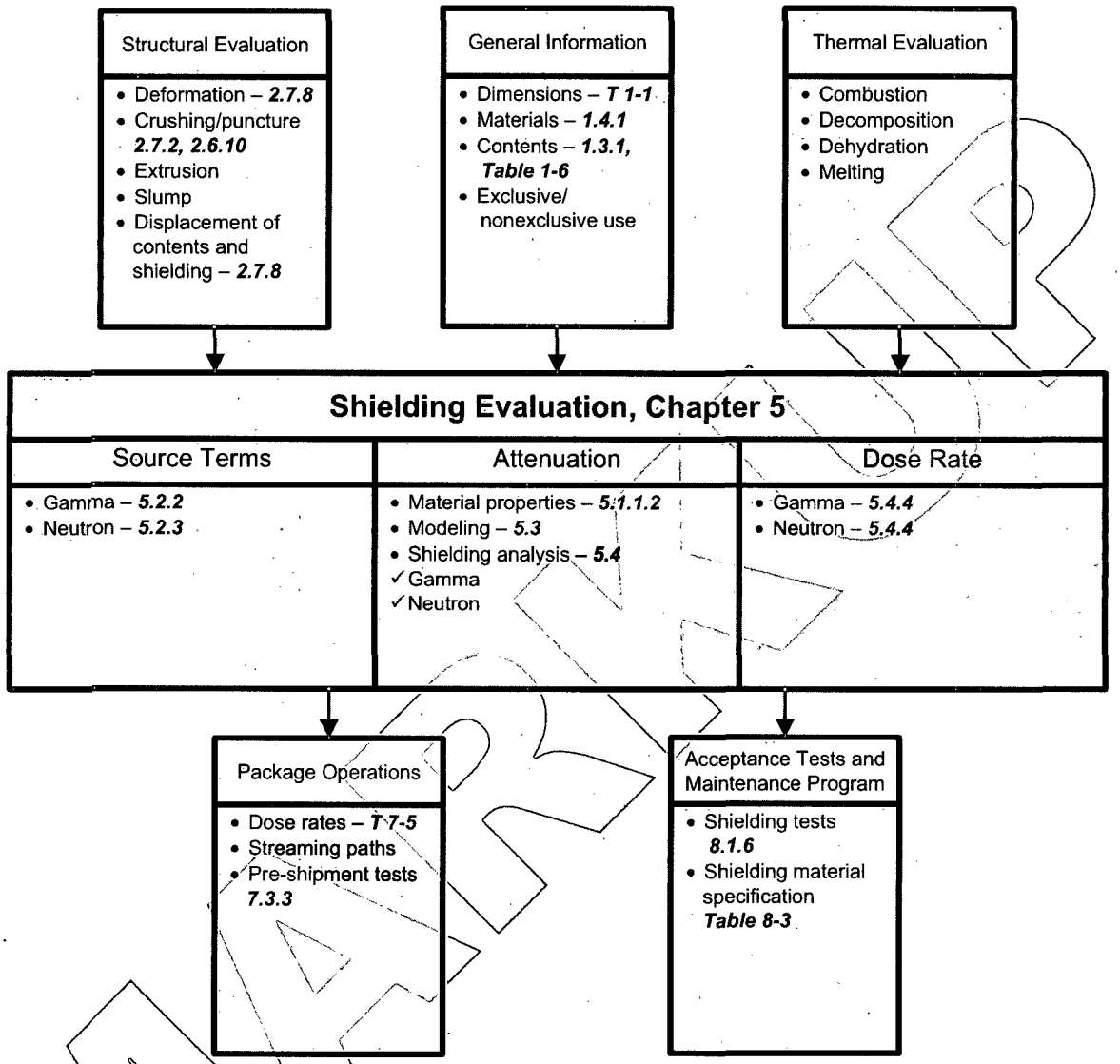

MARKUP

Note: *Unless indicated otherwise, all information related to the Model AOS-100A is also applicable to the Model AOS-100A-S.*

5.1 DESCRIPTION OF SHIELDING DESIGN

This chapter identifies, describes, discusses, and analyzes the principal radiation shielding design of the AOS cask, which is important to safety.

5.1.1 Design Features

5.1.1.1 Geometry

The cask is a cylindrical container, with a cylindrical cavity in which radioactive materials are placed. Tungsten alloy or carbon steel shields for radiation attenuation are located on the top, bottom, and sides of the cavity. Figure 5-1 illustrates the main cask components.

Cask components important to shielding, including the radiation shields and cask cavity, are discussed in this section. For all shielding evaluations, the impact limiter is ignored. Other transport package design features, such as the personnel barrier, securing lines, and internal structure, are irrelevant from a shielding standpoint and are also not considered. The absence of these components in the shielding model provides a more-conservative dose rate estimate. From a dose rate-point location, however, the personnel barriers are important, because they move the normal shipping configuration-accessible surface away from the cask surface. This distance is included in the dose rate point location selection; however, the materials occupying the barrier space are treated as air. Further discussion regarding the barrier dimensions are included in Paragraph 5.3.1.3.

Tests applied to the packaging and its contents, under Normal and Hypothetical Accident conditions of transport, demonstrated that the cask components modeled can maintain their structural integrity for all considered events. This allowed a single geometric model to be developed for each cask size being considered.

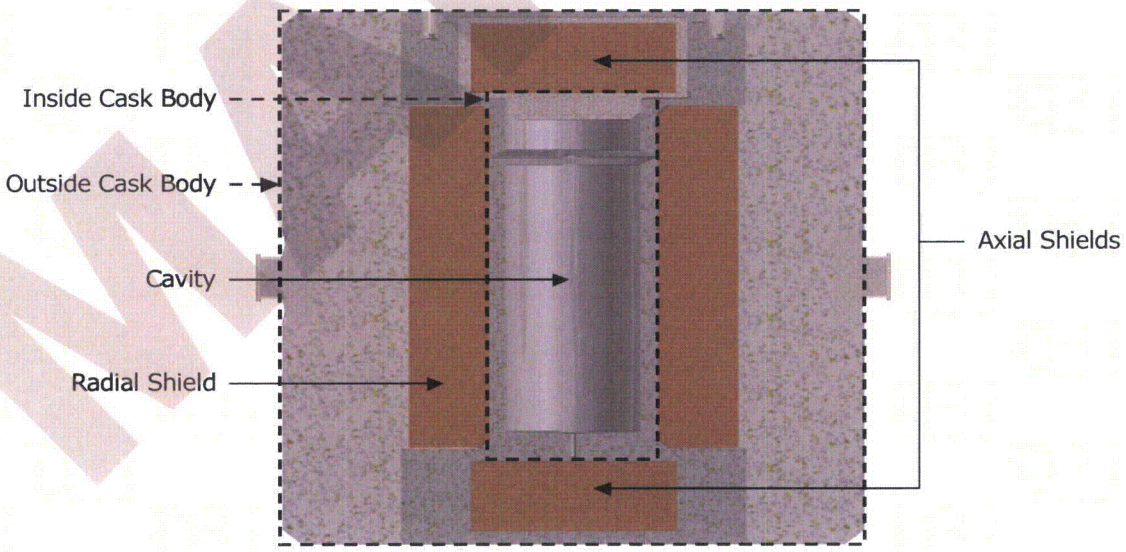

Figure 5-1. Cross-Sectional View of Cask Components

MARKUP

Four cask sizes are under consideration. Table 5-1 lists the outside radius and half-height of each model's cask components. The Half-Height is the distance from the center of the cask to the top of the component (refer to Figure 5-2.) For example, the actual cavity height of the Model AOS-100 is 50.80 cm (20.00 in.), and the height of its axial shield is 11.12 cm (4.38 in.). This is calculated using Equation 1.

$$h_{axial_shield} = HalfHeight_{axial_shield} - HalfHeight_{inner_cask_body} \quad (1)$$

Table 5-2 lists the cavity and axial shield heights for all four AOS Transport Packaging System models. The base model (basic design) is the Model AOS-100 transport package. The other three models are scaled proportionally to the Model AOS-100:

- Model AOS-025 is 25% of the size of the Model AOS-100
- Model AOS-050 is 50% of the size of the Model AOS-100
- Model AOS-165 is 65% greater in size than the Model AOS-100

MARKUP

Table 5-1. Cask Component Dimensions, Outside Radius and Half-Height – All Models

Model	Component	Outside Radius		Half-Height[a]	
		cm	in.	cm	in.
AOS-025	Cavity	2.06	0.81	6.35	2.50
	Inside cask body	2.59	1.02	7.41	2.92
	Radial shield	5.03	1.98	6.90	2.72
	Axial shield	3.15	1.24	10.19	4.01
	Outside cask body	8.89	3.50	11.43	4.50
AOS-050	Cavity	4.12	1.62	12.70	5.00
	Inside cask body	5.18	2.04	14.82	5.83
	Radial shield	10.06	3.96	13.80	5.43
	Axial shield	6.30	2.48	20.38	8.02
	Outside cask body	17.78	7.00	22.86	9.00
AOS-100	Cavity	8.25	3.25	25.40	10.00
	Inside cask body	10.36	4.08	29.64	11.67
	Radial shield	20.12	7.92	27.59	10.86
	Axial shield	12.60	4.96	40.76	16.05
	Outside cask body	35.56	14.00	45.72	18.00
AOS-165	Cavity	13.61	5.36	41.91	16.50
	Inside cask body	17.09	6.73	48.91	19.26
	Radial shield	33.20	13.07	45.53	17.93
	Axial shield	20.80	8.19	67.26	26.48
	Outside cask body	58.67	23.10	75.44	29.70

a. Axial distance from cask centerline.

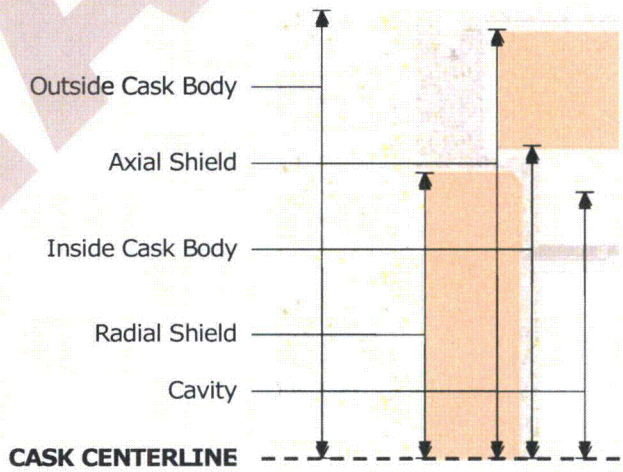

Figure 5-2. Cask Component Half-Height – All Models

MARKUP

Table 5-2. Cask Component Dimensions, Cavity and Axial Shield Height – All Models

Model	Component	Height	
		cm	in.
AOS-025A	Cavity	12.70	5.00
	Axial shield	2.78	1.09
AOS-050A	Cavity	25.40	10.00
	Axial shield	5.56	2.19
AOS-100A AOS-100B AOS-100A-S	Cavity	50.80	20.00
	Axial shield	11.12	4.38
AOS-165A	Cavity	83.82	33.00
	Axial shield	18.35	7.22
AOS-165B	Cavity	83.82	33.00
	Axial shield	18.35	7.22

MARKUP

Table 5-3 lists the demonstration isotopes for which dose-rate limited source inventories are calculated, for each model.

Table 5-3. Demonstration Isotopes Analyzed – All Models

Isotope	Model			
	AOS-025	AOS-050	AOS-100	AOS-165
Co-60	✔	✔	✔	✔
Cs-137	✔	✔	✔	✔
Hf-181		✔	✔	✔
Ir-192	✔	✔	✔	✔
Zr/Nb-95		✔	✔	✔
Ba-135	✔	✔		
C-14	✔	✔		
Fe-59	✔	✔		
Ho-166	✔	✔		
Na-24	✔	✔		
P-32	✔	✔		
P-33	✔	✔		
Sb-124	✔	✔		
Sc-46	✔	✔		
Se-75	✔	✔		
Sm-153	✔	✔		
Sr-89	✔	✔		
Y-90	✔	✔		
Yb-169	✔	✔		
Yb-175	✔	✔		

MARKUP

5.1.1.2 Materials

Table 5-4 lists the materials for each cask component that is important to shielding. Tungsten alloy is used as the shielding material in cask models whose names include the suffix *A*. Carbon steel is used as the shielding material in cask models whose names include the suffix *B*. Therefore, the only difference between the Model AOS-100A and AOS-100B transport packages is the shielding material.

Table 5-4. Cask Component Materials – All Models

Component	Material	Suffix	Model				Density (g/cm^3)
			AOS-025	AOS-050	AOS-100	AOS-165	
Cavity	Air		✔	✔	✔	✔	1.29E-03
Shields[a]	Tungsten Alloy	A	✔	✔	✔	✔	17.8
	Carbon Steel	B			✔	✔	7.8212
Cask	Stainless Steel		✔	✔	✔	✔	7.8

a. Shielding material is either tungsten alloy or carbon steel.

MARKUP

5.1.2 Maximum Radiation Level Summary

Table 5-5 and Table 5-6 list the maximum dose rates for the activation product sources considered in this report, for Normal and Hypothetical Accident conditions of transport, respectively.

Table 5-5. Activation Product Maximum Radiation Level Summary for Normal Conditions of Transport – All Models

Activation Product	Package Surface (mRem/hr)		1m from Package Surface (mRem/hr)	
Radiation	Axial	Radial	Axial	Radial
Gamma	180	180	9	9
Neutron	0	0	0	0
Total	180	180	9	9
10 CFR 71.47(a) Limit	200	200	10[a]	10[a]

a. Transport index cannot exceed 10.

Table 5-6. Activation Product Maximum Radiation Level Summary for Hypothetical Accident Conditions of Transport – All Models

Activation Product	1m from Package Surface (mRem/hr)	
Radiation	Axial	Radial
Gamma	19.31	22.87
Neutron	0	0
Total	19.31	22.87
10 CFR 71.51(a)(2) Limit	1,000	1,000

MARKUP

5.2 SOURCE SPECIFICATION

Shielding analyses were performed for the activation products identified in Subsection 5.1.2. Because of the penetration power of neutral radiation, such as gammas rays, these were the main concern for shielding calculations. Charged particles, such as beta and alpha particles, are not able to penetrate the cask's thick shield layers, and the assumption was made to ignore these particles for shielding evaluations.

To accurately model the activation products' sources, gamma particle energies and their corresponding relative probabilities of emission are needed.

5.2.1 Gamma Source

5.2.1.1 Spectrum

The source description for activation products is obtained from isotope decay schemes, detailing the gamma particle energies and their relative probabilities of emission per disintegration (decay). For sources that emit gamma particles of multiple energies, the emission probabilities are normalized.

Some isotopes have multiple decay modes:

- Beta decay
- Internal conversion
- Electron capture

The relative emission probability for the *i*-th gamma particle emitted from the *j*-th mode of decay was determined using Equation 2.

$$p_{ij} = \frac{br_j * I_i}{\sum_j \sum_i br_j I_i} \qquad (2)$$

where:

p_{ij} = Relative probability for the *i*-th gamma particle emitted from the *j*-th mode of decay

br_j = Branching ratio of the *j*-th decay mode

I_i = Relative intensity of the *i*-th gamma particle per disintegration

Particles with a relative probability of emission less than 0.001 are not included in the shielding model. Particles with low relative probabilities are eliminated and the emission probabilities of the remaining particles are normalized, so that these probabilities sum to unity.

Because charged particles do not have the same penetrating abilities as neutral particles, they are neglected in the shielding models. The Sr-89 and Y-90 sources emit only beta particles and one gamma particle, with a relative intensity of 9.56E-5 and 1.4E-06, respectively. Therefore, dose rates for the Sr-89 and Y-90 sources are not calculated, and there is no content limit based upon the shielding requirements for AOS transport packages. In addition, the C-14, P-32, and P-33 sources undergo Beta decay to a stable isotope; therefore, they also have no limits. The Ba-135 source is naturally stable, and therefore and does not have a limit.

MARKUP

Most of the isotopes emit more than one (1) gamma particle per disintegration. For example, Co-60 emits two (2) gamma particles each time it decays. The definition of the source term, using the relative emission probabilities in *Monte Carlo N-Particle (MCNP)*, is only part of correctly defining the radioactive materials. The MCNP results are normalized to the number of source particles. Each time MCNP simulates a particle history, it samples only one (1) gamma particle. That is, an adjustment must be made to the source strength, to correctly simulate the number of particles emitted per disintegration.

To determine the number of particles emitted per disintegration, it is necessary to manipulate the decay data. The relative decay energy intensities are normalized to 100 disintegrations. The sum of all relative intensities, divided by 100 and multiplied by the absolute intensity, yields the number of emitted gamma particles.

Table 5-7 and Table 5-8 list the source spectra used in the shielding models.

Table 5-7. Isotope Photon per Decay – All Models

Isotope	Photons/Decay	Model			
		AOS-025	AOS-050	AOS-100	AOS-165
Co-60	2	✔	✔	✔	✔
Cs-137	0.85	✔	✔	✔	✔
Hf-181	1.46		✔	✔	✔
Ir-192	2.16	✔	✔	✔	✔
Zr/Nb-95	1.41		✔	✔	✔
Ba-135	Stable Isotope	✔	✔		
C-14	Beta Decay to a Stable Isotope	✔	✔		
Fe-59	1.04	✔	✔		
Ho-166	0.08	✔	✔		
Na-24	2	✔	✔		
P-32	Beta Decay to a Stable Isotope	✔	✔		
P-33	Beta Decay to a Stable Isotope	✔	✔		
Sb-124	1.91	✔	✔		
Sc-46	2	✔	✔		
Se-75	3	✔	✔		
Sm-153	0.36	✔	✔		
Sr-89	9.56E-05	✔	✔		
Y-90	1.4E-6	✔	✔		
Yb-169	1.5	✔	✔		
Yb-175	0.118	✔	✔		

Table 5-8. Activation Product Gamma Spectra Used in Shielding Models – All Models

Isotope	Energy (KeV)	Relative Probability[a]	Model			
			AOS-025	AOS-050	AOS-100	AOS-165
Co-60	1,173	0.5	✔	✔	✔	✔
	1,332	0.5				
Cs-137	661	1	✔	✔	✔	✔
Hf-181	133.0	0.2955		✔	✔	✔
	136.3	0.0399				
	136.9	0.0059				
	345.9	0.1031				
	476.0	0.0048				
	482.2	0.5492				
	615.2	0.0016				
Ir-192	296.0	0.1381	✔	✔	✔	✔
	308.5	0.1427				
	316.5	0.3978				
	416.5	0.0032				
	468.1	0.2299				
	588.6	0.0217				
	604.4	0.0394				
	612,5	0.0257				
Zr/Nb-95	724.2	0.1372		✔	✔	✔
	756.7	0.1738				
	765.8	0.6891				
Ba-135	Stable Isotope		✔	✔		
C-14	Beta Decay to stable atom		✔	✔		
Fe-59	142.6	0.01	✔	✔		
	192	0.03				
	1,099	0.54				
	1,291	0.41				
Ho-166	80.5	0.83	✔	✔		
	1,379	0.12				
	1,581	0.02				
Na-24	1,368	0.500250125	✔	✔		
	2,754	0.499749875				
P-32	Beta Decay to stable atom		✔	✔		
P-33	Beta Decay to stable atom		✔	✔		

WORKUP

Table 5-8. Activation Product Gamma Spectra Used in Shielding Models – All Models (Continued)

Isotope	Energy (KeV)	Relative Probability[a]	Model			
			AOS-025	AOS-050	AOS-100	AOS-165
Sb-124	602	0.52	✔	✔		
	645	0.04				
	713	0.01				
	722	0.057				
	968	0.01				
	1,365	0.01				
	1,691	0.25				
	2,090	0.03				
Sc-46	889.2	0.5	✔	✔		
	1,120	0.5				
Se-75	96.7	0.02	✔	✔		
	121.1	0.1				
	136	0.33				
	264	0.33				
	279	0.14				
	400	0.05				
Sm-153	69.6	0.13	✔	✔		
	73	0.01				
	83	0.005				
	89	0.005				
	97	0.02				
	103	0.81				
	533	0.003				
Sr-89	Beta Decay, with very small (9.56E-05) probability of a gamma emission		✔	✔		
Y-90	Beta Decay, with very small (1.4E-6) probability of a gamma emission		✔	✔		

MARKUP

Table 5-8. Activation Product Gamma Spectra Used in Shielding Models – All Models (Continued)

Isotope	Energy (KeV)	Relative Probability[a]	Model			
			AOS-025	AOS-050	AOS-100	AOS-165
Yb-169	63	0.3	✔	✔		
	93	0.02				
	109	0.11				
	118	0.01				
	130	0.07				
	177	0.15				
	197	0.23				
	261	0.01				
	307	0.07	✔	✔		
Yb-175	113	0.16				
	144	0.03				
	282	0.25				
	396	0.54				

a. *Adapted from KAERI* **[5.2]**.

Nb-95 is a daughter of Zr-95. Due to the similar and relatively short half-lives of the parent and daughter isotopes, it is assumed that the Zr/Nb-95 source is in transient equilibrium. During transient equilibrium, the activity ratio of the parent and daughter are determined by Equation 3.

$$\frac{A_{Nb}}{A_{Zr}} = \frac{\lambda_{Nb}}{\lambda_{Nb} - \lambda_{Zr}} = 2.40 \qquad (3)$$

where:

A_{Nb} = Activity of Nb (daughter)

A_{Zr} = Activity of Zr (parent)

λ_{Nb} = Nb decay constant

λ_{Zr} = Zr decay constant

Therefore, the gammas emitted due to the decay of Nb-95 are approximately 2.4 times as frequent as the gammas emitted due to the decay of Zr-95. Equation 3 is confirmed, using basic Bateman equations. This is taken into account in the calculation of the relative emission probabilities of the more-probable gamma particles and also the number of gammas emitted per disintegration.

5.2.2 Geometry and Density

5.2.2.1 Source Geometry

All isotopes are modeled as point sources, located at the center of the cavity's top edge for axial cases (Z axis, in positive direction), and at the center of the cavity's radial edge for the radial cases (Y axis, in positive direction) for Normal and Hypothetical Accident conditions of transport. This is a more conservative approach than modeling a point source at the center of the cask, or explicitly modeling the internal source geometry and other internal structural components. Point sources do not account for the self-shielding effects provided by the actual source geometry and density, nor for the shielding provided by internal components, such as source racks. If the true source geometry is long enough that it might be better represented by a line source, the error associated with the use of a point source may be large, but it will always be in the conservative direction. These conservative approaches provide assurance that the dose rate obtained from the point source models is over-predicted. Because the dose rate obtained from point source models meets regulatory requirements, the transport packages meet regulatory requirements in their as-shipped configuration. Also, by placing the point sources directly against the cavity wall, the most likely source displacements are modeled. This source geometry and location represents the appropriately conservative approach.

5.2.3 Neutron Source

Note: *Not applicable. Neutron-emitting materials are not considered in this evaluation.*

MARKUP

5.3 SHIELDING MODEL

5.3.1 Source and Shielding Configuration

An explicit 3D model of the cask, representative of the dimensions tabulated in Table 5-1 and Table 5-2, was developed using the stochastic particle transport code *Monte Carlo N-Particle (MCNP)*. The use of these nominal values, to define the shield model, is consistent with standard engineering practices. The increase in possible dose rates, due to the very small tolerances on these dimensions, is bounded by the conservative 10% reduction in allowable dose limits described in Section 5.4.4.1. This code is described in more detail, in Subsection 5.4.1. The impact limiter, personnel barrier, and any internal or external components were modeled as air, for conservatism. A sketch of the cask components modeled is provided in Figure 5-1. Tests applied to the packaging and their contents, under Normal and Hypothetical Accident conditions of transport, demonstrated that the cask components modeled maintained their structural integrity for all considered events. This allowed a single geometric model to be developed for each cask size being considered.

The use of a stochastic method for the dose rate calculation requires the application of variance reduction techniques, to obtain precise solutions in a timely manner. Correct implementation of variance reduction techniques yields the same solution with a similar statistical variance as a basic stochastic simulation, but in a shorter amount of computer time.

Application of variance reduction techniques requires the user to define an objective. The transport package models are constructed according to this objective. Usually, in shielding calculations, the objective is to transport more particles to the detection point, to reduce the statistical variance of the result. To accomplish this objective, the natural behavior of the particles is altered, to "guide" the particles toward the detection point. To preserve the physics of the problem, the particle weights are adjusted according to the probability of each particle's mode of interaction and the outcome of such interaction among all possible interactions and/or outcomes.

5.3.1.1 Importance Splitting

One of the variance reduction techniques used in the shielding model is importance splitting. This technique divides the cask into regions, and assigns particle importance values to these regions. The structure of importance regions can be determined by examining the average Mean Free Path of source *S* (for example, the average distance that an average source particle travels before an interaction occurs) in material *M*, as stated in Equation 4.

$$MFP = \frac{1}{\rho_M \mu_{MS}} \tag{4}$$

where:

MFP = Mean Free Path

ρ_M = Mass density of material *M* [g/cm^3]

μ_{MS} = Total interaction cross-section (or attenuation coefficient) of the average particle in source *S* for material *M* [cm^2/g]

MIZ-PRELIM

Each importance region is generally 1.5 to 2 Mean Free Paths thick. Table 5-9 and Table 5-10 list the Mean Free Path for each isotope source, in each material.

Table 5-9. Mean Free Path of an Average Gamma Particle from Each Source, for Each Cask Material – All Models

Isotope	Mean Free Path in Cask Material (cm)[a]			Model			
	Tungsten Alloy	Carbon Steel	Stainless Steel	AOS-025	AOS-050	AOS-100	AOS-165
Co-60	1.0086	2.4033	2.3964	✔	✔	✔	✔
Cs-137	0.6087	1.7636	1.7683	✔	✔	✔	✔
Hf-181	0.2508	1.3127	1.3176		✔	✔	✔
Ir-192	0.2823	1.3544	1.3610	✔	✔	✔	✔
Zr/Nb-95	0.6962	1.8803	1.8854		✔	✔	✔

a. Based upon attenuation coefficients obtained from Reference **[5.3]**.

Table 5-10. Mean Free Path of an Average Gamma Particle from Each Source – Models AOS-025 and AOS-050

Isotope	Mean Free Path in Cask Material (cm)[a]	
	Tungsten Alloy	Stainless Steel
BA-135	–	–
C-14	–	–
Co-60	0.85	1.9
Cs-137	0.48	1.4
Fe-59	0.78	1.5
Ho-166	0.86	1.6
Na-24	0.95	1.8
P-32	–	–
P-33	–	–
Sb-124	0.80	1.7
Sc-46	0.70	1.4
Se-75	0.25	1.0
Sm-153	0.38	1.1
Sr-89	–	–
Y-90	–	–
Yb-169	0.15	1.0
Yb-175	0.24	1.0

a. Based upon attenuation coefficients obtained from Reference **[5.3]**.

Particle importance values are assigned to each importance region. Generally, the ratio of the importance values between adjacent regions should be between 2 and 4. The importance value aims to maintain a constant particle population in each region, between the source and detection points. One way to accomplish this is to take an initial guess at the particle importance, examine the number of particle tracks entering the importance region, and adjust the particle importance accordingly.

Because the dose rate is needed on both radial and axial cask surfaces, implementation of importance splitting requires the separation of each transport package model into two cases – axial and radial. Doing so simplifies structure of importance regions and assignment of importance values.

Due to symmetry, the dose rate at the top of the cask should be the same as the dose rate at the bottom. Therefore, only the dose rate at the top was obtained. The model for the axial case is constructed with the objective of reducing the statistical variance of dose rate at the top of the cask. Therefore, the importance values increase as the particle moves from the source location to the axial detection planes. If a particle travels in an undesirable direction (for example, away from the detection point), the probability that this particle survives through the shields and scatters up to the axial detection planes is quite low. For the axial case, an undesirable direction is included along the radial direction and toward the bottom of the cask. After approximately 8 or 9 Mean Free Paths of travel in an undesirable direction, an importance value of zero (0) can be assigned. This procedure terminates the history of a particle that would provide an insignificantly small contribution to the dose rate in the axial direction. Because a computer is used to do the calculations, this frees the computer from spending time tracking a particle that does not contribute to the simulation's objective.

Similarly, in the radial case, the importance values increase as the particle travels from the source location toward the cask's radial surface. The undesirable directions are toward the cask top and bottom. Due to symmetry, the importance values assigned to the cask's top regions are the same as the importance values assigned to the cask's bottom regions. Figure 5-3 illustrates a sample model that indicates the importance regions.

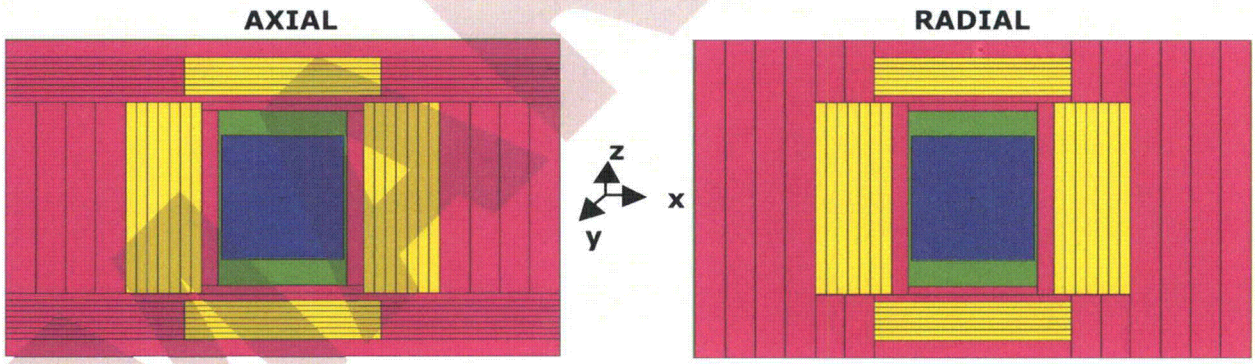

Figure 5-3. Axial and Radial Shielding Case Importance Regions

5.3.1.2 Source Biasing

Source biasing is another variance reduction technique used in the shielding models. This involves changing the source's emission angle. In radioactive decay, particles are emitted isotropically (that is, the probability of emission for all angles is the same). As in many variance reduction techniques, when the natural characteristics of the problem are altered, the particle weight is altered accordingly. For the axial cases, particles are four times (4x) more likely to be emitted toward the cask's top (within a cone angle of 45°). In most radial cases, particles are four times (4x) more likely to be emitted in the radial direction (within a cone angle of 90°).

5.3.1.3 Dose Rate Points

All dose rate points were modeled as point detectors located on the cask's positive Y-axis for radial cases, and the cask's positive Z-axis for axial cases. Simulations were run independently, to determine axial and radial dose rates. These dose rate points were selected to allow for the minimum amount of shielding material and distance to exist between the source point and point detector. The use of point geometries at these locations provides for conservative estimates of dose rates from the radioactive sources being transported. Due to this appropriate conservatism, no reduction in nominal shield thickness was made for voids, streaming paths, nor irregular geometries. This choice is further justified by noting that an actual radioactive load in the container would be distributed over significantly more volume than a point source, even in Hypothetical Accident conditions of transport and, therefore, only a small fraction of source radiation would directly penetrate through the shield depletions. Practically, any maximum dose rate from streaming or localized source concentrations will be detected during the mandatory radiation surveys on loaded containers, before shipment. The dose rates must comply with the appropriate transport limits.

Table 5-11 lists the distance from the center point of the cask to these dose rate location points. Figure 5-4 demonstrates that dose points at the personnel barrier and 1m from the cask surface are used for all analyses, and that dose points 1m from the personnel barrier are also used in Co-60 dose calculations only.

Table 5-11. Dose Rate Measurement Locations from Center of Cask – All Models

Model	Radial Case			Axial Case			Reference Assembly Drawing Number
	Shipping Surface to Personnel Barrier Surface (cm)	1m from Cask Surface (cm)	1m from Personnel Barrier Surface (cm)	Shipping Surface to Personnel Barrier Surface (cm)	1m from Cask Surface (cm)	1m from Personnel Barrier Surface (cm)	
AOS-025	18.4	108.89	118.4	24.0	111.43	124.0	166D8142
AOS-050	41.4	117.78	141.4	41.0	122.86	141.0	105E9718
AOS-100	84.0	135.57	184.0	90.0	145.52	190.0	105E9711
AOS-165	118.0	158.67	218.0	151.2	175.50	251.2	105E9707

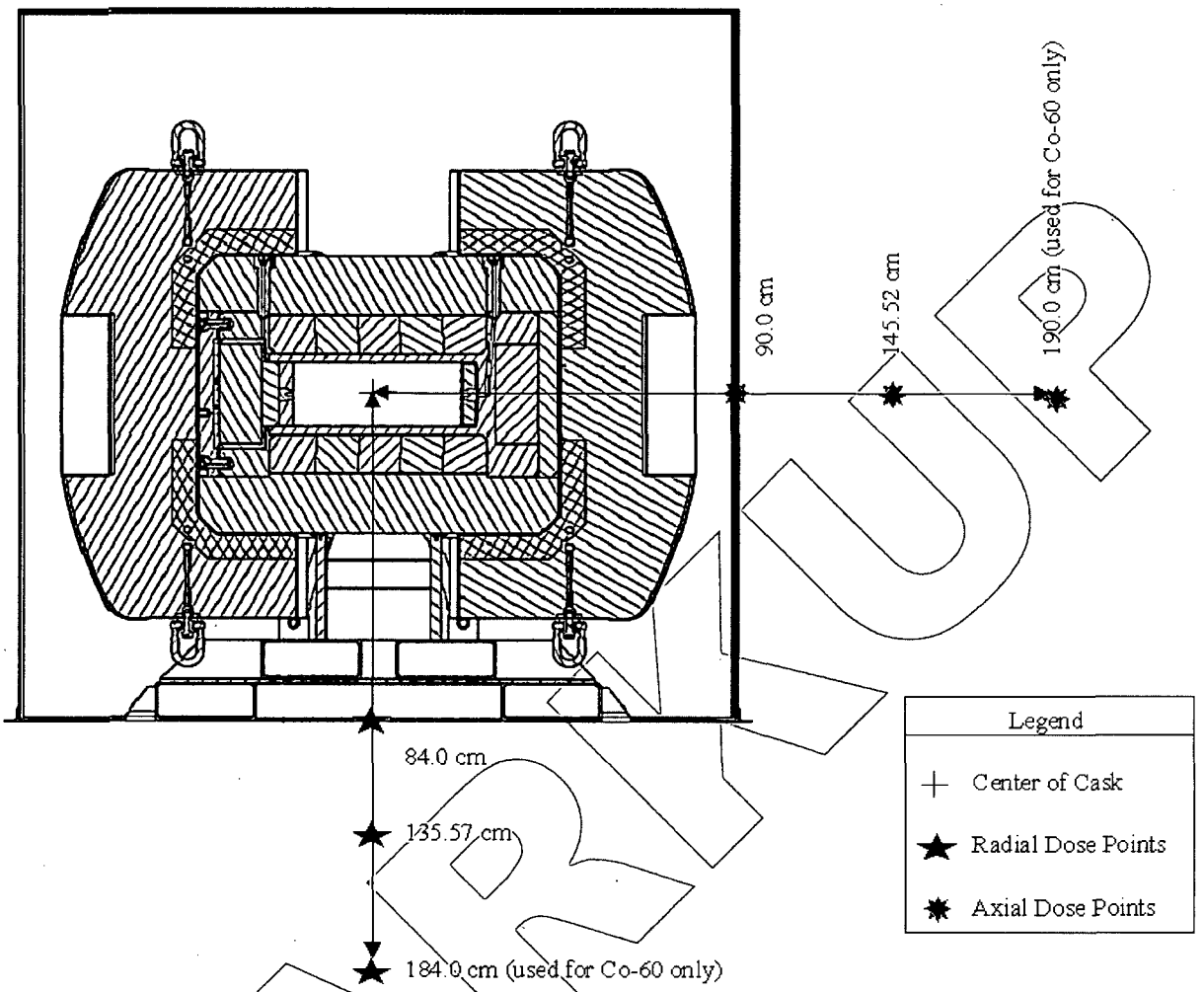

Figure 5-4. Sample Dose Rate Calculation Points – Model AOS-100

MARKUP

5.3.2 Material Properties

Standard material compositions and densities are used to construct the shielding models. For the A models, the shield is constructed of tungsten alloy. Pure tungsten is used in the models with a density lower than the theoretical density of natural tungsten. This density is a conservative estimate of the tungsten density in the shield. Table 5-12 tabulates the material compositions.

Table 5-12. Cask Component Material Specifications

Component	Material	Model Type		Material Composition		Density (g/cm^3)
		A	B	Element	Weight Fraction	
Cavity	Air			Nitrogen	0.7454	1.29E-03
				Oxygen	0.2284	
				Argon	0.0261	
Shield[a]	Tungsten Alloy	✔		Tungsten	1.0000	17.8[b]
	Carbon Steel		✔	Carbon	0.0100	7.8212
				Iron	0.9900	
Cask	Stainless Steel			Iron	0.7200	7.8
				Manganese	0.0200	
				Chromium	0.1800	
				Nickel	0.0800	

a. The shielding material is either tungsten alloy or carbon steel, depending upon the model type.

b. The density used for tungsten alloy is conservatively assumed to be lower than standard.

MARKUP

5.4 SHIELDING EVALUATION

5.4.1 Methods

5.4.1.1 General Description of Computational Tool

The dose rate is calculated using the stochastic particle transport code called *Monte Carlo N-Particle (MCNP)*, version 4A, with the *ENDF/B-V* photon library. MCNP is used because of its flexibility in modeling all geometrical configurations and the majority of particle types, and for its use of continuous energy libraries.

The Monte Carlo method involves tracking the interaction histories of individual particles. The behavior of the source particles within the system is inferred, by taking a statistical average of all particle histories. To achieve statistical significance, thousands or even millions of histories can be required, making this a time-consuming modeling method.

Interactions experienced by the particle are sampled from a probability density function, with the help of a pseudo-random number generator. This is similar to throwing dice to determine which type of interaction occurs next in the particle's "random walk." Compared to deterministic methods in which solutions to a governing equation are obtained, the Monte Carlo method is often viewed as a numerical experiment.

For detailed information regarding the simulation method and use of *Monte Carlo-N-Particle (MCNP)*, refer to Reference **[5.4]**.

5.4.1.2 Basic Input Parameters

The information required to use MCNP is the system description, which includes the cask's geometry and material description, source biasing, source definition details, importance splitting values, conversion factors, and point detector details. The point detectors are used to obtain the particle flux at the dose rate points. The point detector units are in particles per square centimeter. In this analysis, gamma rays are the particles of interest. The dose rate is determined by using flux-to-dose-rate conversion factors, which convert the final MCNP tally to Rems per hour (Rem/hr). This can then be used to calculate the limiting Curie content that maintains all dose rate values below the regulated values, at all surfaces.

Other input parameters are related to implementation of variance reduction techniques. The model importance structure must be provided, which includes dividing each cask component into subsections and assigning importance values to each subsection. These importance values are dependent upon system geometry and materials, as well as source characteristics, and most importantly the location of the dose rate points. Figure 5-3 illustrates the difference in importance structure between the axial and radial cases for the same transport package model. Due to symmetry and separation of the models into two (2) cases – axial and radial – the physical 3D system is converted into two quasi-one-dimensional models, which makes the importance structure simpler to construct.

To implement source biasing in MCNP, the desired emission probabilities must be supplied for each emission cone. The three inputs to be supplied are:

- Division of the emission cones
- Actual probability distribution function (pdf) of emission
- Biased (needed) pdf of emission

The division of the emission cones was supplied as the cosine value of these cones. The pdf for the actual emission angles is related to the angle cosines. In *Monte Carlo N-Particle*, the emission angle is determined by sampling a number between -1 and 1, to determine the cosine value. Therefore, the actual pdf of emission is the probability that the source particle is emitted in a certain cosine range. Particles from radioactive sources are emitted isotropically (that is, all angles have equal probability). When translating this information into a cosine range, the actual probabilities for each of the equally divided cone angles are not equal.

The biased probabilities are relative to one another. These values are not required to sum to unity. Instead, MCNP internally normalizes these values. In the models that implement source biasing, the desired emission angles (that is, toward the axial or radial detection surfaces) are four times (4x) more likely to be chosen. Figure 5-5 provides an example (from the Model AOS-165) of how to define the source in *Monte Carlo N-Particle*.

```
sdef  pos=0 0 0   erg=d4   vec0 0 1  dir=d5
c SOURCE SPECTRUM
si4  L 0.133021     0.13626      0.13686      0.34593      $ gamma energies
       0.47599      0.48218      0.61517
sp4    0.295469648  0.039926847  0.005876441  0.103139777  $ relative probabilities
       0.004794517  0.54920009   0.00159268
c SOURCE BIASING
si5  -1 -0.707   0        0.707   1                        $ cosine bins
sp5   0  0.1465  0.3535   0.3535  0.1465                   $ actual probabilities
sb5   0  1       4        4       1                        $ biased probabilities
```

Figure 5-5. Hf-181 Point Source Definition with Source Biasing into Radial Direction

MARKUP

5.4.2 Input and Output Data

The main differences between transport package models are the cask size, shielding material, importance structure, and source specification. Examples of inputs and outputs representative of the Model AOS-100A and AOS-100B, and sources analyzed, are provided in Appendix 5.5.

5.4.3 Flux-to-Dose-Rate Conversion

Conversion factors from *ANSI/ANS-6.1.1 1977 American Nuclear Society* are used to obtain the gamma dose rate. These are located in Reference **[5.6]**, Appendix H. The conversion is implemented in *Monte Carlo N-Particle*, using the dose rate energy and dose rate function cards. Use of the conversion factors provided in Reference **[5.4]** converts the *Monte Carlo N-Particle* point detector output of photon/cm^2 to dose rates in units of Rem per hour (Rem/hr). Both the point detector flux and converted dose rate calculated are normalized values per source particle emission, consistent with Monte Carlo methodology.

MARKUP

5.4.4 External Radiation Levels

5.4.4.1 Maximum Source Strength Calculation

The bounding limit for an isotope is found by determining the Curie level that, if any greater, would just exceed the regulatory limits at any one of the detection points. To add conservatism to this process, a margin was added to the final dose rate limits. The process was as follows – all final values were calculated for only 90% of the regulated dose rate limits:

- 200 mRem/hr limit at the shipping surface became a 180 mRem/hr limit
- 1m Normal conditions of transport limit became a 9 mRem/hr limit
- 1m Hypothetical Accident conditions of transport limit became a 900 mRem/hr limit

This conservative methodology provides additional margin, to ensure that the cask contents do not cause dose rate limits to be exceeded.

For several of the isotopes, MCNP models were not run; instead, energy comparisons were made to other cases that have been modeled in MCNP. These isotopes were then compared to another isotope with a bounding gamma emission, and a conclusion was made as to the source strength of that isotope in the specific transport package model. For example, isotope Yb-169 is bounded, energy-wise, by Yb-175. This means that all the gamma radiation emitted by Yb-169 is of lower energy, and thus has less penetrating power. Because this is the case, the same MCNP data is used to calculate a limiting dose rate for the bounded Yb-169 source. The only difference between the two isotopes is the photon/decay values (listed in Table 5-7), which can be applied to correctly determine the dose rate limited source strength.

This method of bounding a non-simulated isotope was done for Model AOS-025 isotopes Se-75 and Yb-169, and Model AOS-050 isotopes Fe-59, Ho-166, Sb-124, Sc-46, Se-75, Sm-153, and Yb-169. Table 5-13 lists the elements used to limit (bound) these isotopes.

Table 5-13. Bounding Sources – Models AOS-025 and AOS-050

Isotope	Bounding Isotope	Model	
		AOS-025	AOS-050
Fe-59	Co-60		✔
Ho-166	Na-24		✔
Sb-124	Na-24		✔
Sc-46	Co-60		✔
Se-75	Yb-175	✔	✔
Sm-153	Yb-175		✔
Yb-169	Yb-175	✔	✔

The maximum allowable Curie level for transport for each isotope modeled is calculated using Equations 5, 6, and 7. First, the MCNP output [$Tally_{out}$] for each isotope and dose rate location is converted to units of mRem/hr-Ci using Equation 5.

$$\frac{Dose[mREM]}{[hour-Ci]} = \frac{Tally_{out}[REM]}{[hour-photon]} * \frac{1000[mREM]}{[REM]} * \frac{[photons]}{[Bq]} * \frac{3.7E10[Bq]}{[Ci]} \tag{5}$$

Additional conservatism is applied by applying a 2σ adder to this term, as is done in Equation 6.

$$\frac{Dose_{+2sig}[mREM]}{[hour-Ci]} = \frac{Dose\ [mREM]}{[hour-Ci]} + \frac{Dose\ [mREM]}{[hour-Ci]} * 2\sigma \tag{6}$$

The maximum source strength that will meet the regulatory dose rate limit at the location being analyzed is then calculated using Equation 7.

$$Source_{Max}[Ci] = \frac{0.9 * Dose_{LIMIT}[mREM/hour]}{Dose_{+2sig}[mREM/hour-Ci]} \tag{7}$$

The maximum curie content of each isotope at each dose rate location is solved for using this approach. Results are then tabulated, and the minimum of the source values obtained is reported as the maximum source strength viable for shipment based on dose rate limits. The dose rates based upon these source values for locations of interest are reported in Table 5-14 through Table 5-19.

MARKUP

5.4.4.2 Radiation Analysis Results

A single model (identical geometry and source specifications) is used for both Normal and Hypothetical Accident conditions of transport simulations. The dose rates reported are applicable to both scenarios.

The following dose rate limits are met for all isotopes, except Cobalt, in compliance with *10 CFR 71.47(a)* and *10 CFR 71.51(a)(2)* (Normal and Hypothetical Accident conditions of transport, respectively):

- A surface limit of 200 mRem/hr (2 mSv/h) on the outside surface of the personnel barrier, to comply with Normal conditions of transport limits.
- A limit of 10 mRem/hr (0.1 mSv/h), at 1m from the cask surface. This is conservative with respect to the Normal conditions of transport limit, which is 10 mRem/hr, at 1m from the personnel barrier (farthest from source). It is also conservative with respect to the Hypothetical Accident conditions of transport 1,000 mRem/hr limit, at 1m from the cask surface.

For Cobalt, additional dose rate points were also considered to meet the *10 CFR 71.47(a)* and *10 CFR 71.51(a)(2)* (Normal and Hypothetical Accident conditions of transport, respectively) limits:

- A surface limit of 200 mRem/hr (2mSv/h) on the outside surface of the personnel barrier, to comply with Normal conditions of transport limits.
- A limit of 1,000 mRem/hr (10 mSv/h) at 1m from the cask surface, to comply with Hypothetical Accident conditions of transport limits.
- A limit of 10 mRem/hr at 1m from the personnel barrier, to comply with Normal conditions of transport limits.

Note: *For the activity limits of all isotopes (referenced in this report), refer to Table 7-5, "Activity Limits – All Models."*

Shipment Transportation Index (TI) can be calculated by using the highest dose (either radial or axial) at 1m from the cask, for each isotope and package combination, to define a conservative transport index. The packages containing cobalt should define the transport index based upon the maximum dose rate at 1m from the personnel barrier. These numbers are defined in Table 5-14 through Table 5-19. The dose rates reported result in a single package always having a TI less than 10, allowing for non-exclusive shipment of a single cask. If multiple casks will be shipped together, their respective TI values must be summed, to determine whether their shipment must be exclusive or non-exclusive.

MARKUP

Table 5-14. Maximum Radiation Levels – Model AOS-025A

Isotope	Source Strength (Ci)	Photon/ Bq	Location	Radial Dose Rate (mRem/hr)	Axial Dose Rate (mRem/hr)	Limit (mRem/hr)	Comments
Ba-135	No Limit	–	–	–	–	–	Stable Isotope
C-14	No Limit	–	–	–	–	–	Beta Decay to Stable Isotope
Co-60	2.36E-01	2	Barrier Surface	180.00	125.95	200	1m Dose Rate from Cask and 1m Dose Rate from Personnel Barrier Considered
			1m from Cask	4.42	4.20	1,000	
			1m from Barrier	3.73	3.36	10	Tungsten alloy liner thickness of 2.15 cm axially and 1.397 cm radially inside cavity
Cs-137	3.45E+01	0.85	Barrier Surface	180.00	109.79	200	Tungsten alloy liner thickness of 2.15 cm axially and 1.397 cm radially inside cavity
			1m from Cask	4.12	3.80	10	
Fe-59	5.85E-01	1.04	Barrier Surface	180.00	124.29	200	Tungsten alloy liner thickness of 2.15 cm axially and 1.397 cm radially inside cavity
			1m from Cask	4.39	4.16	10	
Ho-166	2.74E+01	0.08	Barrier Surface	180.00	126.35	200	Tungsten alloy liner thickness of 2.15 cm axially and 1.397 cm radially inside cavity
			1m from Cask	4.45	4.09	10	
Ir-192	1.48E+02	2.16	Barrier Surface	180.00	100.76	200	Tungsten alloy liner thickness of 2.15 cm axially and 1.397 cm radially inside cavity
			1m from Cask	4.09	3.40	10	
Na-24	6.97E-02	2	Barrier Surface	180.00	128.13	200	Tungsten alloy liner thickness of 2.15 cm axially and 1.397 cm radially inside cavity
			1m from Cask	4.59	4.30	10	
P-32	No Limit	Beta Decay	–	–	–	–	Beta Decay to Stable Isotope
P-33	No Limit	Beta Decay	–	–	–	–	Beta Decay to Stable Isotope
Sb-124	3.13E-01	1.91	Barrier Surface	180.00	129.05	200	Tungsten alloy liner thickness of 2.15 cm axially and 1.397 cm radially inside cavity
			1m from Cask	4.51	4.32	10	
Sc-46	5.55E-01	2	Barrier Surface	180.00	120.12	200	Tungsten alloy liner thickness of 2.15 cm axially and 1.397 cm radially inside cavity
			1m from Cask	4.37	4.02	10	
Se-75	1.47E+04	3	–	–	–	–	Gamma Energy Spectrum Bounded by Yb-175
Sm-153	1.36E+05	0.36	Barrier Surface	180.00	103.59	200	Tungsten alloy liner thickness of 2.15 cm axially and 1.397 cm radially inside cavity
			1m from Cask	4.06	3.63	10	
Sr-89	No Limit	9.56E-5 per Beta	–	–	–	–	Beta Decay with Very Low Gamma Emission Probability

Table 5-14. Maximum Radiation Levels – Model AOS-025A (Continued)

Isotope	Source Strength (Ci)	Photon/ Bq	Location	Radial Dose Rate (mRem/hr)	Axial Dose Rate (mRem/hr)	Limit (mRem/hr)	Comments
Y-90	No Limit	1.4E-6 per Beta	–	–	–	–	Beta Decay with Very Low Gamma Emission Probability
Yb-169	2.94E+04	1.5	–	–	–	–	Gamma Energy Spectrum Bounded by Yb-175
Yb-175	3.74E+05	0.118	Barrier Surface	180.00	173.18	200	Tungsten alloy liner thickness of 2.15 cm axially and 1.397 cm radially inside cavity
			1m from Cask	3.96	6.39	10	

MARKUP

Table 5-15. Maximum Radiation Levels – Model AOS-050A

Isotope	Source Strength (Ci)	Photon/ Bq	Location	Radial Dose Rate (mRem/hr)	Axial Dose Rate (mRem/hr)	Limit (mRem/hr)	Comments
Ba-135	No Limit	Stable	–	–	–	–	Stable Isotope
C-14	No Limit	Beta Decay	–	–	–	–	Beta Decay to Stable Isotope
Co-60	2.84E+00	2	Barrier Surface	44.19	180.00	200	1m Dose Rate from Cask and 1m Dose Rate from Personnel Barrier Considered
			1m from Cask	4.29	11.78	1000	
			1m from Barrier	2.91	8.66	10	
Cs-137	3.46E+02	0.85	Barrier Surface	7.84	101.46	200	
			1m from Cask	0.72	9.00	10	
Fe-59	5.46E+00	1.04	–	–	–	–	Gamma Energy Spectrum Bounded by Co-60
Hf-181	1.69E+03	1.46	Barrier Surface	0.79	90.31	200	
			1m from Cask	0.08	9.00	10	
Ho-166	1.05E+01	0.08	–	–	–	–	Gamma Energy Spectrum Bounded by Na-24
Ir-192	9.81E+02	2.16	Barrier Surface	5.98	98.75	200	
			1m from Cask	0.56	9.00	10	
Na-24	4.19E-01	2	Barrier Surface	41.07	138.43	200	
			1m from Cask	4.15	9.00	10	
P-32	No Limit	Beta Decay	–	–	–	–	Beta Decay to Stable Isotope
P-33	No Limit	Beta Decay	–	–	–	–	Beta Decay to Stable Isotope
Sb-124	4.38E-01	1.91	–	–	–	–	Gamma Energy Spectrum Bounded by Na-24
Sc-46	2.84E+00	2	–	–	–	–	Gamma Energy Spectrum Bounded by Co-60
Se-75	2.84E+03	3	–	–	–	–	Gamma Energy Spectrum Bounded by Yb-175
Sm-153	2.36E+04	0.36	–	–	–	–	Gamma Energy Spectrum Bounded by Yb-175
Sr-89	No Limit	9.56E-5 per Beta	–	–	–	–	Beta Decay with Very Low Gamma Emission Probability
Y-90	No Limit	1.4E-6 per Beta	–	–	–	–	Beta Decay with Very Low Gamma Emission Probability
Yb-169	5.67E+03	1.5	–	–	–	–	Gamma Energy Spectrum Bounded by Yb-175

DRAFT

Table 5-15. Maximum Radiation Levels – Model AOS-050A (Continued)

Isotope	Source Strength (Ci)	Photon/ Bq	Location	Radial Dose Rate (mRem/hr)	Axial Dose Rate (mRem/hr)	Limit (mRem/hr)	Comments
Yb-175	7.21E+04	0.118	Barrier Surface	0.10	89.76	200	
			1m from Cask	0.02	9.00	10	
Zr/Nb-95	5.66E+01	1.4	Barrier Surface	18.17	117.42	200	
			1m from Cask	1.68	9.00	10	

MARKUP

Table 5-16. Maximum Radiation Levels – Models AOS-100A and AOS-100A-S

Isotope	Source Strength (Ci)	Photon/ Bq	Location	Radial Dose Rate (mRem/hr)	Axial Dose Rate (mRem/hr)	Limit (mRem/hr)	Shipping Configuration
Co-60	2.02E+4	2	Barrier Surface	56.09	13.06	200	1m Dose Rate from Cask and 1m Dose Rate from Personnel Barrier Considered Axial tungsten alloy liner 3.56 cm thick (top and bottom)
			1m from Cask	17.88	3.82	1,000	
			1m from Barrier	9.00	2.03	10	
Cs-137	3.33E+06	0.85	Barrier Surface	0.05	25.51	200	
			1m from Cask	0.02	9.00	10	
Hf-181	3.90E+07	1.46	Barrier Surface	0.01	25.41	200	
			1m from Cask	0.01	9.00	10	
Ir-192	1.14E+07	2.16	Barrier Surface	0.44	26.23	200	
			1m from Cask	0.14	9.00	10	
Zr/Nb-95	3.49E+05	1.4	Barrier Surface	0.50	26.33	200	
			1m from Cask	0.16	9.00	10	

Table 5-17. Maximum Radiation Levels – Model AOS-100B

Isotope	Source Strength (Ci)	Photon/ Bq	Location	Radial Dose Rate (mRem/hr)	Axial Dose Rate (mRem/hr)	Limit (mRem/hr)	Shipping Configuration
Co-60	1.62E+02	2	Barrier Surface	54.48	32.72	200	1m Dose Rate from Cask and 1m Dose Rate from Personnel Barrier Considered Axial tungsten alloy liner 3.56 cm thick (top and bottom)
			1m from Cask	17.72	8.70	1,000	
			1m from Barrier	9.00	4.51	10	
Cs-137	4.97E+02	0.85	Barrier Surface	0.78	36.13	200	
			1m from Cask	0.24	9.00	10	
Hf-181	2.50E+03	1.46	Barrier Surface	0.48	36.49	200	
			1m from Cask	0.15	9.00	10	
Ir-192	1.56E+03	2.16	Barrier Surface	0.64	36.25	200	
			1m from Cask	0.20	9.00	10	
Zr/Nb-95	1.01E+02	1.4	Barrier Surface	1.07	35.70	200	
			1m from Cask	0.34	9.00	10	

Table 5-18. Maximum Radiation Levels – Model AOS-165A

Isotope	Source Strength (Ci)	Photon/Bq	Location	Radial Dose Rate (mRem/hr)	Axial Dose Rate (mRem/hr)	Limit (mRem/hr)	Shipping Configuration
Co-60	4.02E+07	Barrier Surface	2	1.93	34.77	200	1m Dose Rate from Cask and 1m Dose Rate from Personnel Barrier Considered
		1m from Cask		0.88	22.87	1,000	
		1m from Barrier		0.41	9.00	10	
Cs-137	4.75E+11	Barrier Surface	0.85	2.25E-03	12.34	200	
		1m from Cask		2.18E-03	9.00	10	
Hf-181	1.58E+13	Barrier Surface	1.46	0.01	12.22	200	
		1m from Cask		0.01	9.00	10	
Ir-192	9.21E+11	Barrier Surface	2.16	0.05	12.39	200	
		1m from Cask		0.02	9.00	10	
Zr/Nb-95	1.91E+10	Barrier Surface	1.4	9.34E-03	12.30	200	
		1m from Cask		4.87E-03	9.00	10	

Table 5-19. Maximum Radiation Levels – Model AOS-165B

Isotope	Source Strength (Ci)	Gamma/Bq	Location	Radial Dose Rate (mRem/hr)	Axial Dose Rate (mRem/hr)	Limit (mRem/hr)	Shipping Configuration
Co-60	3.70E+05	Barrier Surface	2	41.48	31.29	200	1m Dose Rate from Cask and 1m Dose Rate from Personnel Barrier Considered Tungsten alloy liners: 5.41 cm axial, 0.67 cm radial
		1m from Cask		19.31	19.90	1,000	
		1m from Barrier		9.00	7.49	10	
Cs-137	8.09E+05	Barrier Surface	0.85	0.04	14.50	200	
		1m from Cask		0.02	9.00	10	
Hf-181	1.02E+07	Barrier Surface	1.46	0.02	14.56	200	
		1m from Cask		0.01	9.00	10	
Ir-192	2.96E+06	Barrier Surface	2.16	0.05	14.48	200	
		1m from Cask		0.02	9.00	10	
Zr/Nb-95	8.38E+04	Barrier Surface	1.4	0.07	14.44	200	
		1m from Cask		0.03	9.00	10	

DRAFT

5.5 APPENDIX

This appendix presents the following information:

- AOS Cask Isotopic Heat Load for Numerous Isotopes Report
- Data CDs

5.5.1 AOS Cask Isotopic Heat Load for Numerous Isotopes Report

This appendix provides a copy of GE Hitachi Nuclear Energy's "AOS Cask Isotopic Heat Load for Numerous Isotopes" report.

MARKUP

0.0 Revision History

Revision 0 of this report determined the heat load for P-32, P-33, Sr-89, Ba-135, and Ho-166.

Revision 1 of this report determined the heat load for the following additional isotopes: C-14, Na-24, Sc-46, Se-75, Sm-153, Yb-169, and Yb-175. Section 3.0 was slightly modified to consider frequencies above 1% (Revision 0 only considered frequencies above 10%), and a sentence was added in this section to state that the gamma heat loads are conservative.

Revision 2 of this report incorporated an editorial change. The "GEH Proprietary Information" designation in the header was deleted in order to be able to include this report as an appendix to a cask safety analysis report (SAR).

Revision 3 of this report determined the heat load for the following additional isotopes: Fe-59, Co-60, Sr/Y-90, Zr/Nb-95, Sb-124, Cs-137, Hf-181, and Ir-192. In addition, the heat load values were determined using MicroShield instead of the formula used in Revision 2.

1.0 Purpose

The purpose of this evaluation is to determine the heat load (in units of W/Ci) for C-14, Na-24, P-32, P-33, Sc-46, Fe-59, Co-60, Se-75, Sr-89, Sr/Y-90, Zr/Nb-95, Sb-124, Ba-135, Cs-137, Sm-153, Ho-166, Yb-169, Yb-175, Hf-181, and Ir-192.

2.0 Analysis/Results

The following table below provides the heat load values generated from MicroShield Version 7.02. It should be noted that MicroShield utilizes two different libraries to calculate the heat load: the Grove and ICRP-38 libraries. The heat load is generated for each of the two libraries, then the higher value of the two is provided in the table below for conservatism.

MARKED

Isotope	Heat Load (W/Ci)
C-14	2.93E-04
Na-24	2.77E-02
P-32	4.12E-03
P-33	4.54E-04
Sc-46	1.26E-02
Fe-59	7.74E-03
Co-60	1.54E-02
Se-75	2.41E-03
Sr-89	3.46E-03
Sr-90	1.16E-03
Y-90	5.54E-03
Zr-95	5.06E-03
Nb-95	4.80E-03
Sb-124	1.33E-02
Ba-135	Stable isotope
Ba-137m	3.92E-03
Cs-137	1.11E-03
Sm-153	1.94E-03
Ho-166	4.29E-03
Yb-169	2.51E-03
Yb-175	1.00E-03
Hf-181	4.38E-03
Ir-192	6.13E-03

As can be seen in the table, Ba-135 is a stable isotope and does not decay.

In terms of Cs-137, it is assumed that this isotope is combined with Ba-137m (due to the short half-life of Ba-137m). As a result, the heat load for Cs-137 in Section 3.0 contains the heat load from Ba-137m as well.

The value for Sr/Y90 in Section 3.0 is determined by conservatively summing the heat loads for Sr-90 and Y-90.

MAKEUP

Nb-95 is a daughter of Zr-95. Due to the similar and relatively short half-lives of the parent and daughter isotopes, it is assumed that the Zr/Nb-95 source is in transient equilibrium. During transient equilibrium, the activity ratio of the parent and daughter are determined by the equation:

$$\frac{A_{Nb}}{A_{Zr}} = \frac{\lambda_{Nb}}{\lambda_{Nb} - \lambda_{Zr}} = 2.40$$

where:

A_{Nb} = Activity of Nb (daughter)

A_{Zr} = Activity of Zr (parent)

λ_{Nb} = Nb decay constant

λ_{Zr} = Zr decay constant

Thus, the gammas emitted due to the decay of Nb-95 are approximately 2.4 times as frequent as the gammas emitted due to the decay of Zr-95. The equation is confirmed using basic Bateman equations. This is taken into account in the calculation of the relative emission probabilities of the more-probable gamma-particles and also the number of gammas emitted per disintegration.

As a result, the Zr/Nb-95 heat load is calculated by taking the Zr-95 heat load value and adding it to 2.4 times the Nb-95 heat load. The resulting value is 1.66E-02 W/Ci for Zr/Nb-95.

MARKUP

3.0 Conclusions

The table below summarizes the results:

Isotope	Heat Load (W/Ci)
C-14	2.93E-04
Na-24	2.77E-02
P-32	4.12E-03
P-33	4.54E-04
Sc-46	1.26E-02
Fe-59	7.74E-03
Co-60	1.54E-02
Se-75	2.41E-03
Sr-89	3.46E-03
Sr/Y-90	6.70E-03
Zr/Nb-95	1 .66E-02
Sb-124	1 .33E-02
Ba-135	Stable isotope
Cs-137	5.03E-03
Sm-153	1.94E-03
Ho-166	4.29E-03
Yb-169	2.51E-03
Yb-175	1.00E-03
Hf-181	4.38E-03
Ir-192	6.13E-03

MARKUP

5.5.2 Data CDs

All thermal input/output files, as well as all Autodesk Inventor files, are attached on the Compact Discs (CDs), as listed below:

- **CDs 1, 2, and 3** – All analytical files, including the LIBRA FE program
- **CD 4** – Autodesk Inventor files

MARKUP

5.6 REFERENCES

[5.1] U.S. Nuclear Regulatory Commission (NRC), *Title 10 Code of Federal Regulations, Part 71 (10 CFR 71)*, "Packaging and Transportation of Radioactive Material," January 26, 2004.

[5.2] Korea Atomic Energy Research Institute, *Table of Nuclides*, accessed September, 2006 http://atom/kaeri.re.kr/.

[5.3] Berger, et. al., *XCOM: Photon Cross Sections Database*, National Institute of Standards and Technology-Physics Laboratory, August 2005, accessed September, 2006 http://physics.nist.gov/PhysRefData/Xcom/Text/XCOM.html.

[5.4] X-5 Monte Carlo Team, *MCNP-A General Monte Carlo N-Particle Transport Code*, April, 2003.

[5.5] Attix, F. H., *Introduction to Radiological Physics and Radiation Dosimetry*. New York: John Wiley & Sons, 1986.

[5.6] American Nuclear Society, *ANSI/ANS-6.1.1*, "Neutron and Gamma-Ray Fluence-to-Dose Factor," 1972.

MARKUP

THIS PAGE INTENTIONALLY LEFT BLANK.

MARKUP

6 CRITICALITY EVALUATION

Note: *No content, other than the image below, is provided in this chapter. A criticality evaluation is not applicable, because fissile material is not requested as content.*

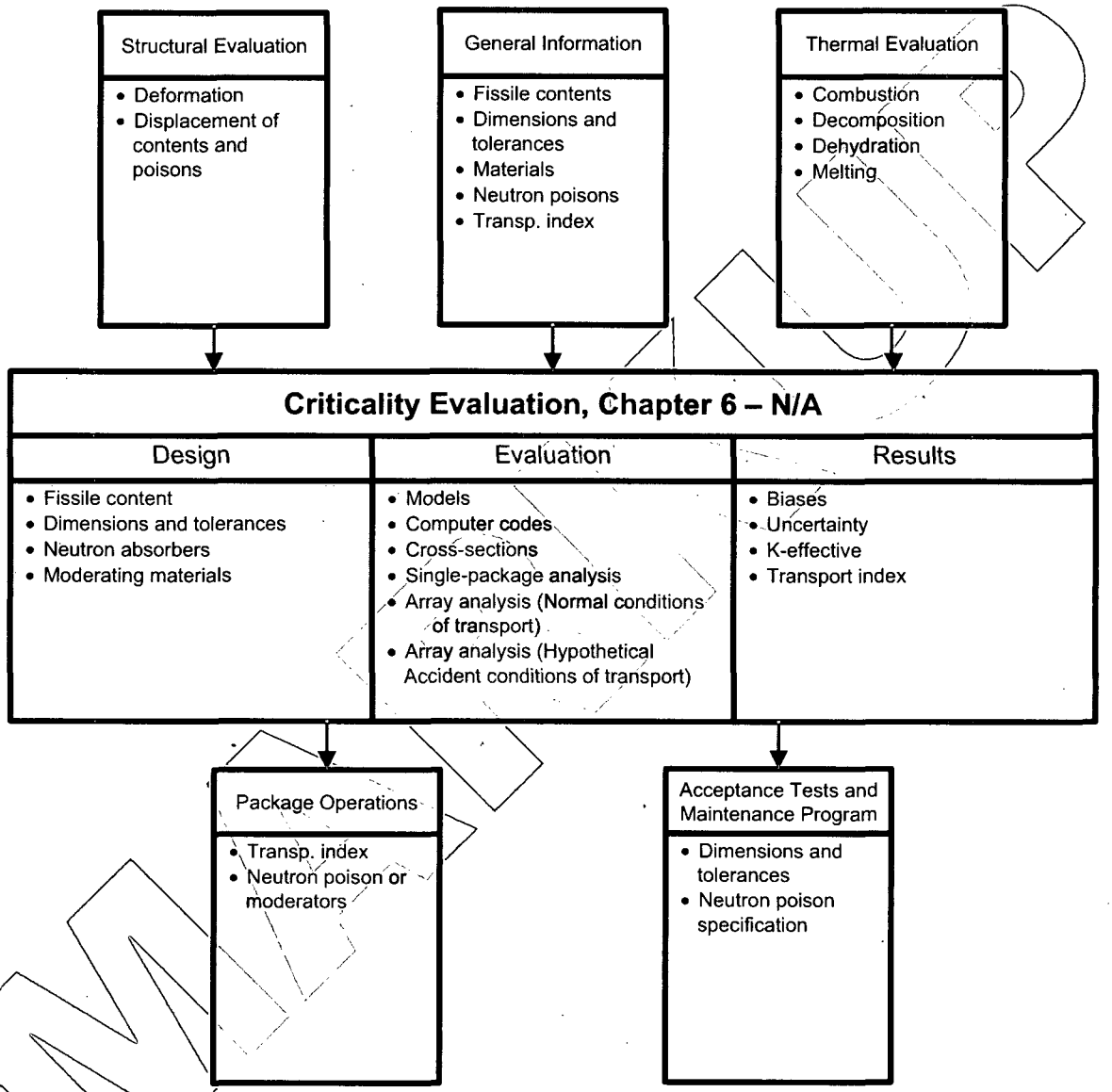

THIS PAGE INTENTIONALLY LEFT BLANK.

MARKUP

7 PACKAGE OPERATIONS

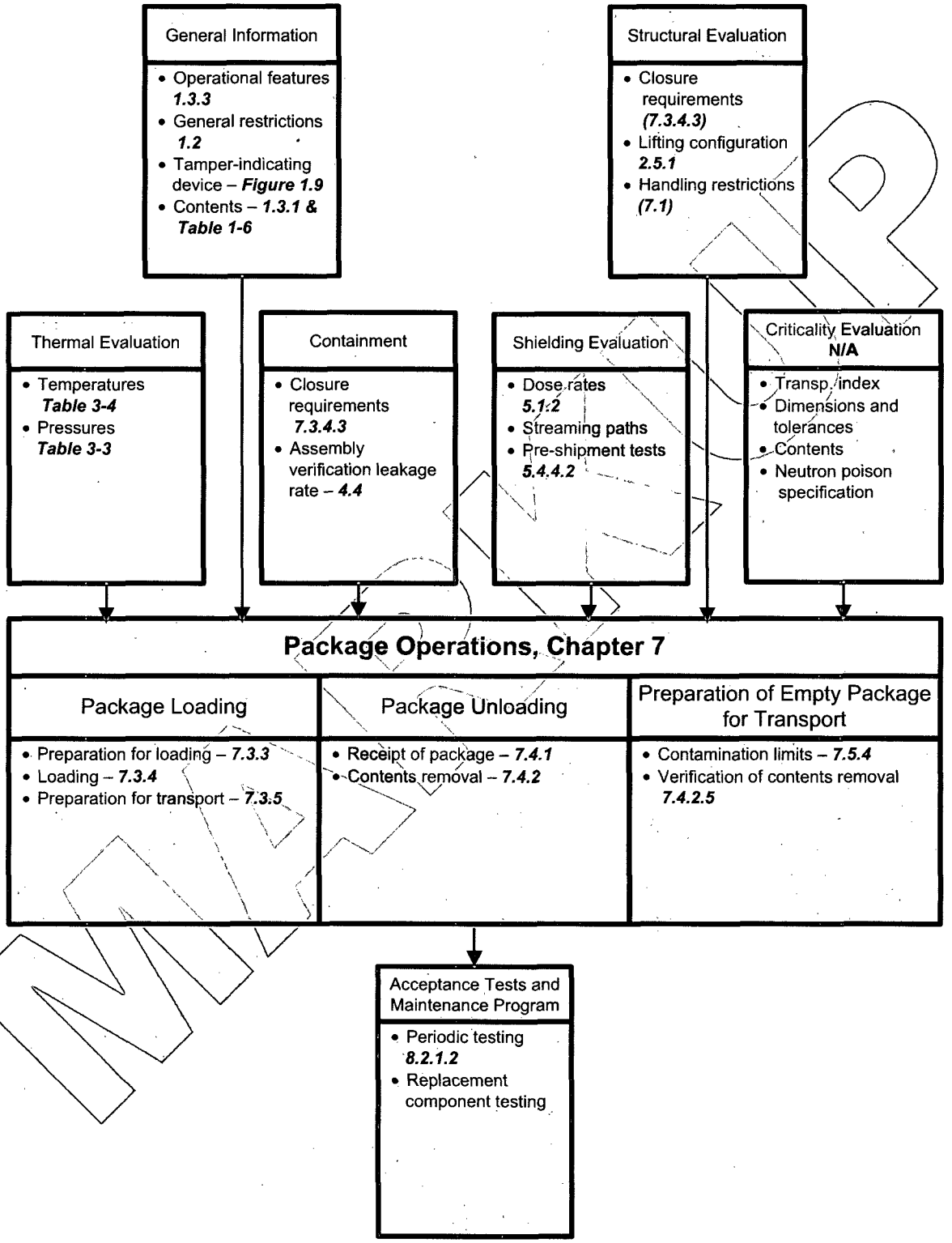

Note: *Unless indicated otherwise, all information related to the Model AOS-100A is also applicable to the Model AOS-100A-S.*

This chapter summarizes instructions for AOS Transport Packaging System use. A more detailed description of these instructions is included in the site-specific procedure developed by each authorized packaging user to comply with their site programs. However, these site-specific procedures must comply 100% with this chapter's requirements. During actual operation, these procedures can be supplemented with engineering personnel, training classes, and/or other site-specific procedures, as applicable.

Part of the operating procedure is a Pre-Shipment Engineering Evaluation, Paragraphs 502 **[7.1]**, 71.87 **[7.2]**, and 173.475 **[7.3]**. The evaluation is used to ensure that the packaging, with its proposed contents, satisfies the applicable requirements of the transport package's license or certificate. This evaluation includes, but is not limited to, review of the following:

- Proposed contents' isotopic composition, quantities, and decay heat
- Proposed contents' form, weight, and geometry
- Shielding requirements
- Structural requirements
- Thermal requirements
- Pressure requirements
- Shipping hardware (liners, racks, dividers, baskets, shoring devices, and so forth)

Figure 7-1 through Figure 7-4 provide isometric views of each model's packaging (Models AOS-025A, AOS-050A, AOS-100A/AOS-100A-S, and AOS-165A, respectively).

Models AOS-025 and AOS-050 are transported vertically, using a pallet design, as illustrated in Figure 7-1 and Figure 7-2, respectively. Models AOS-100 and AOS-165 are transported horizontally, using a cradle arrangement, as illustrated in Figure 7-3 and Figure 7-4, respectively. This distinction is due to the specific package's size and weight.

MARKUP

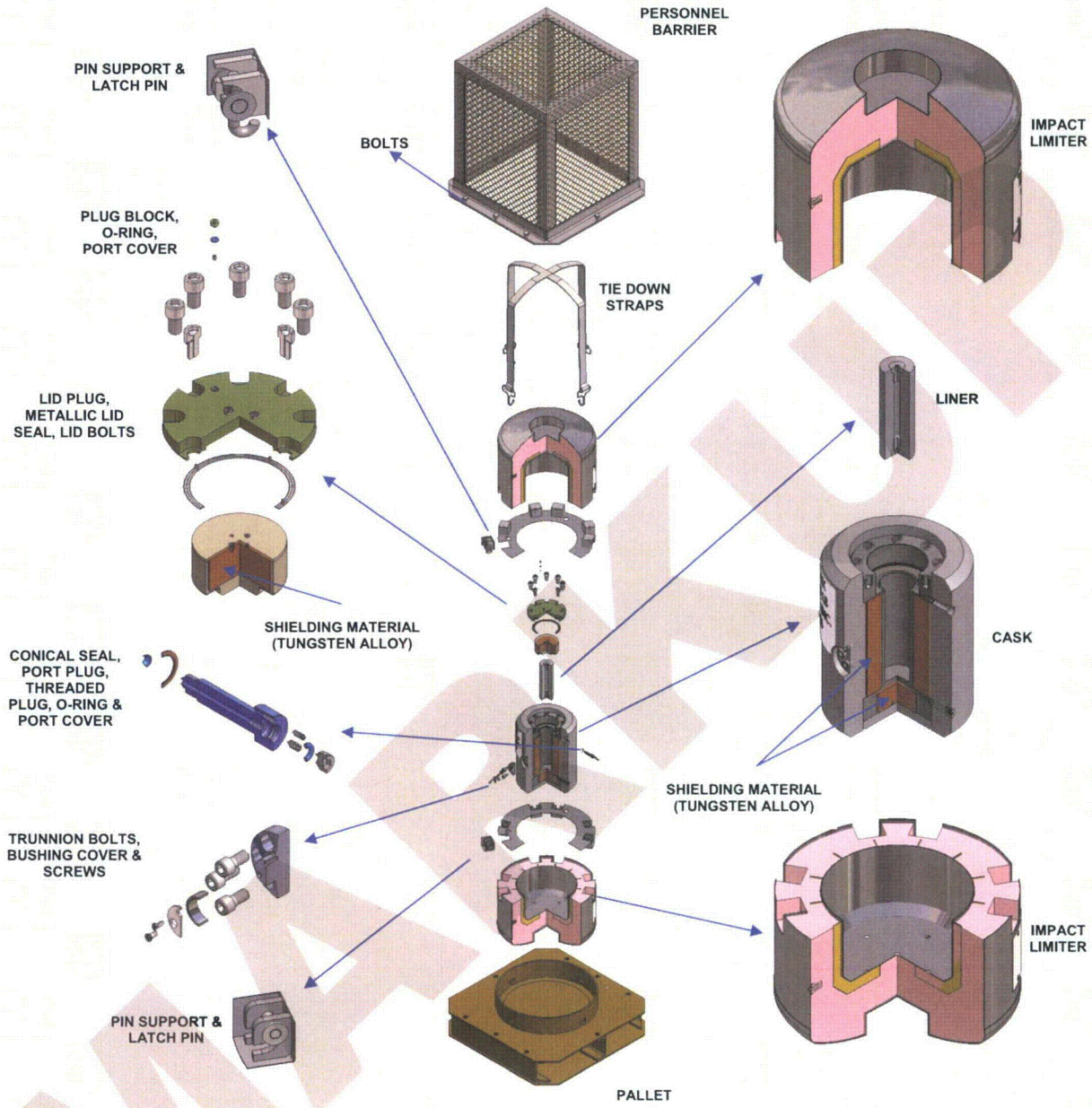

Figure 7-1. Transport Package, Isometric View – Model AOS-025A

MARKUP

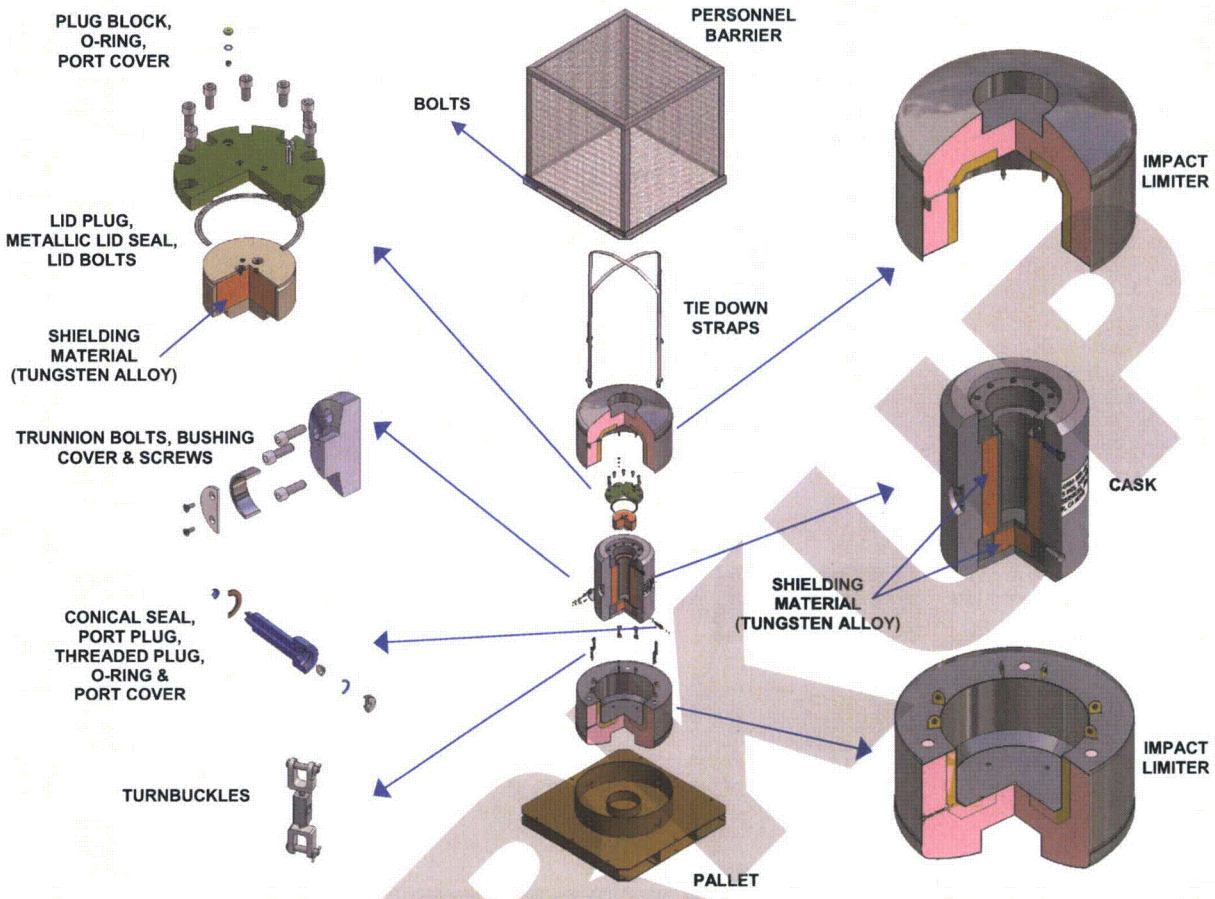

Figure 7-2. Transport Package, Isometric View – Model AOS-050A

MARKUP

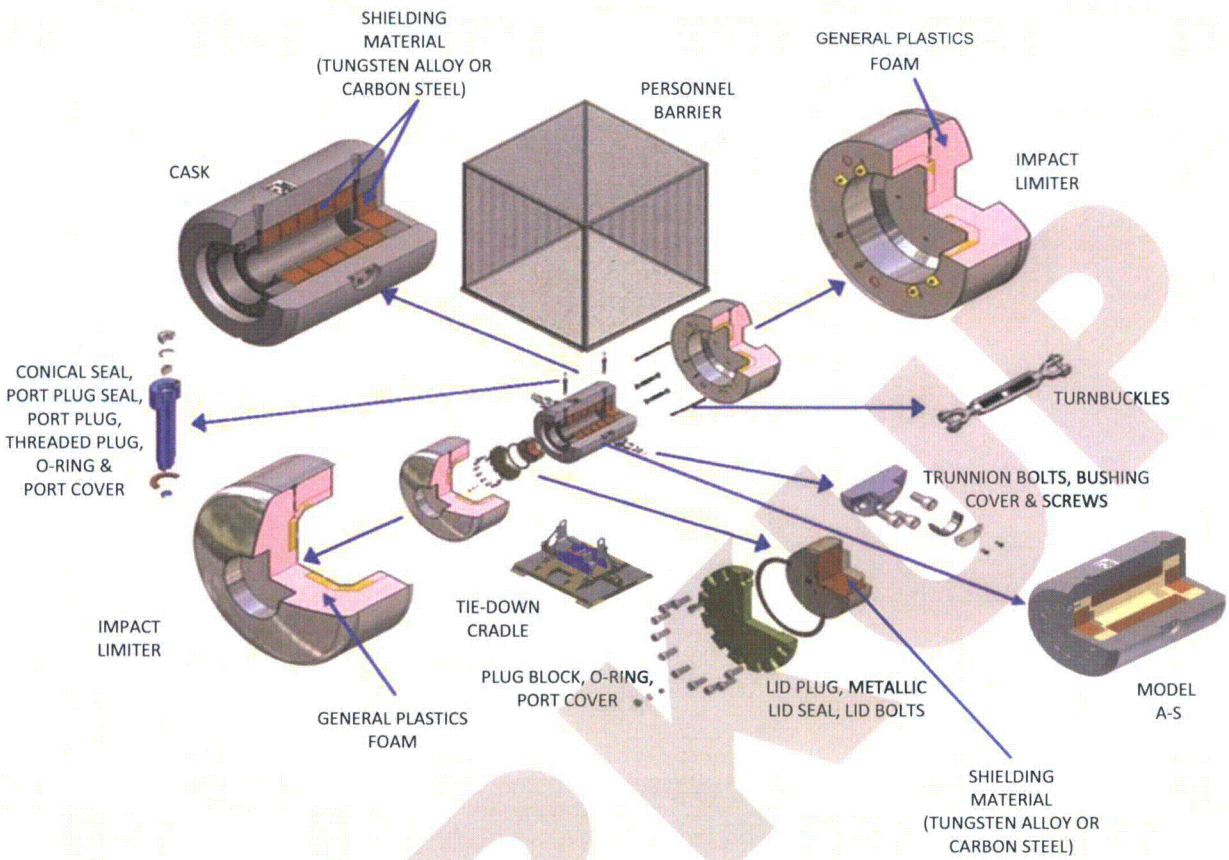

Figure 7-3. Transport Package, Isometric View – Models AOS-100A and AOS-100A-S

MARKUP

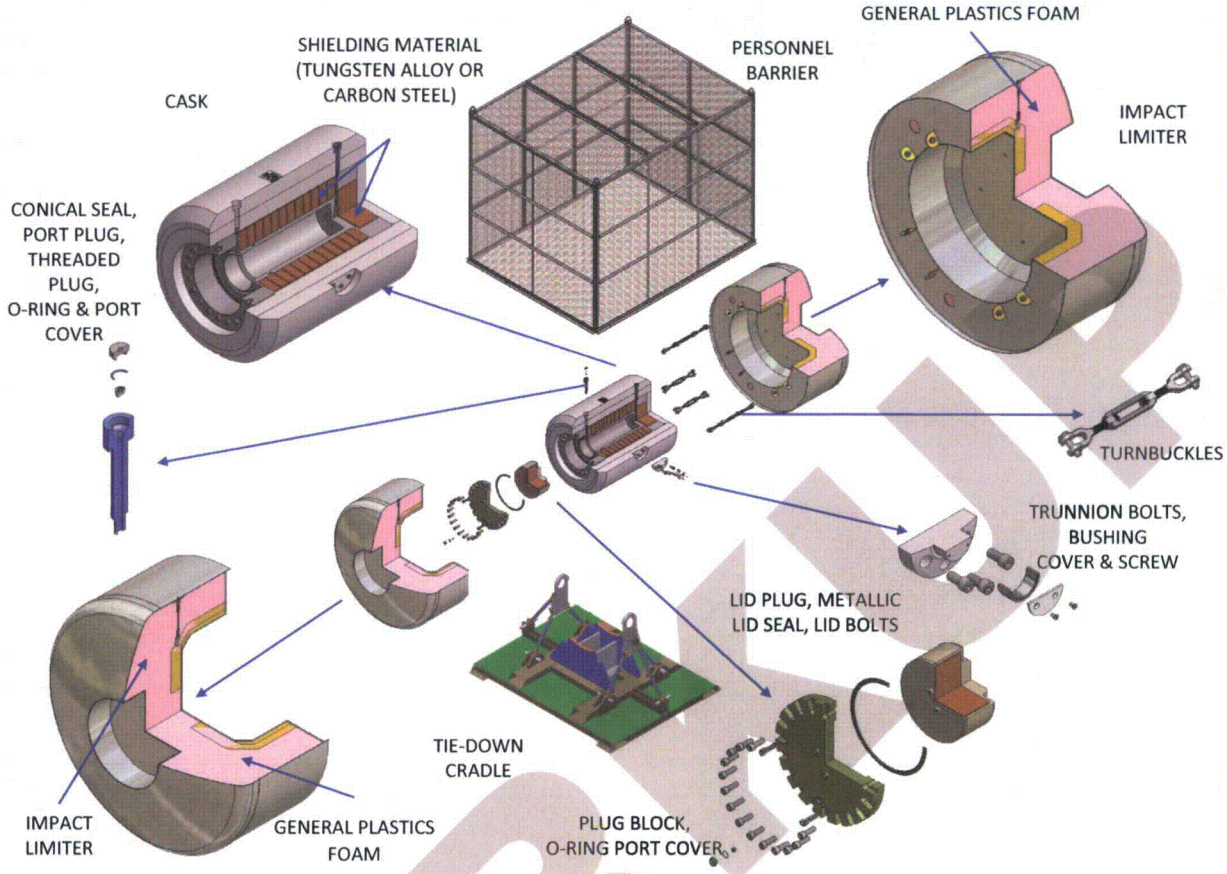

Figure 7-4. Transport Package, Isometric View – Model AOS-165A

MARKUP

7.1 SUMMARY OF OPERATING REQUIREMENTS AND RESTRICTIONS

The following summarizes the operating requirements and restrictions:

a. Review all requirements imposed by the package's licensing agency certificate.

b. Ensure that personnel involved in Transport Packaging System operation are familiar with all documents pertinent to the operation and maintenance of the packages, and that they have received HAZMAT training, per Paragraph172.704 **[7.9]**.

c. Review Table 7-1 (which lists the packages and their components weights), for the purpose of selecting the proper handling devices.

d. Review Table 7-2, Table 7-3, and Table 7-4, to be apprised of the packaging surface temperature and cavity pressures. These values represent maximum conditions.

e. Review the Activity Limits listed in Table 7-5. These values represent maximum conditions.

f. Review the AOS Transport Packaging System drawings listed in Table 7-6, in preparation for Receiving Inspection.

Table 7-1. AOS Transport Packaging System Dimension and Weight Summary – All Models

Model	Category	Dimensions (cm / in.)						Weight (kg / lbs.)			
		Packaging		Cask		Cavity					
		OD	Height	OD	Height	OD	Height	Packaging[a]	Cask	Limiters	Content
AOS-025A	III	28.96	39.62	17.78	22.86	4.14	12.70	71.4	53.6	11	6.8
		11.40	15.60	7.00	9.00	1.63	5.00	157	118	24	15
AOS-050A	III	57.96	79.25	35.56	45.72	8.26	25.40	511	431.2	52.6	27.2
		22.82	31.20	14.00	18.00	3.25	10.00	1,126	950	116	60
AOS-100A	II	115.93	158.50	71.12	91.44	16.51	50.80	3,950	3,451	272	227
		45.64	62.40	28.00	36.00	6.50	20.00	8,700	7,601	599	500
AOS-100B	III	115.93	158.50	71.12	91.44	16.51	50.80	3,232	2,823	272	227
		45.64	62.40	28.00	36.00	6.50	20.00	7,125	6,218	600	500
AOS-100A-S	II	115.93	158.50	71.12	91.44	16.51	50.80	3,901	3,402	272	227
		45.64	62.40	28.00	36.00	6.50	20.00	8,600	7,500	600	500
AOS-165A	I	191.26	264.16	117.35	150.88	27.23	83.82	18,234	14,968	2,268	998
		75.30	104.00	46.20	59.40	10.72	33.00	40,200	33,000	5,000	2,200
AOS-165B	I	191.26	264.16	117.35	150.88	27.23	83.82	15,535	12,270	2,268	998
		75.30	104.00	46.20	59.40	10.72	33.00	34,250	27,050	5,000	2,200

a. All AOS Transport Packaging System models have dimensions greater than 10 cm (4 in.).

Table 7-2. Normal Conditions of Transport Temperature Summary – All Models

Package Component	Maximum Temperatures											
	AOS-025A		AOS-050A		AOS-100A AOS-100A-S		AOS-100B		AOS-165A		AOS-165B	
	°C	°F	°C	°F	°C	°F	°C	°F	°C	°F	°C	°F
Cask Cavity	99	210	128	263	126	258	126	259	365	689	202	395
Shielding Material	98	209	125	257	121	250	122	251	329	623	187	369
Cask Seal Area	98	208	123	254	118	245	118	245	304	580	177	350
Cask Test Port	98	208	123	253	116	241	116	241	289	553	171	339
Cask Drain Port	98	208	124	254	116	242	116	242	290	555	171	340
Cask Vent Port	98	208	123	254	118	245	118	245	305	580	177	350
Cask Outside Surface	98	208	122	252	115	239	115	239	266	510	162	324
Impact Limiter Foam Material	98	208	124	255	119	246	119	246	311	592	180	355
Overpack Accessible Outside Surface[a]	87	189	95	202	79	174	79	174	80	176	80	176

a. Listed temperatures are on the overpack and cask surfaces, and not at the personnel barrier surface.

WKUP

Table 7-3. Maximum Cask Cavity Pressure Due to Normal Conditions of Transport – All Models

Model	Volume		Temperature[a]		Pressure[b]			Design Pressure[c]	
	l	in³	°C	°F	kPa	psia		kPa	psia
AOS-025	0.17	10	99	210	126	18	<	207	30
AOS-050	1.36	83	128	263	136	20	<	414	60
AOS-100A AOS-100A-S	11.21	684	126	258	135	20	<	1,931	280
AOS-100B	11.21	684	126	259	135	20	<	1,931	280
AOS-165A	49	2,978	365	689	209	30	<	1,517	220
AOS-165B	49	2,978	202	395	209	30	<	1,517	220

a. Temperatures listed are the maximum values obtained throughout Normal conditions of transport events.

b. Pressure calculation is based upon the ideal gas law, where:

$$\frac{P_1 V_1}{T_1} = \frac{P_2 V_2}{T_2} \Rightarrow \frac{P_1}{T_1} = \frac{P_2}{T_2}$$

Initial Condition

$P_1 = 14.7$ psia

$T_1 = 78°F$

Final Condition

$P_2 = ?$

$T_2 = 256°F$

$$P_2 = \frac{(256 + 460)}{(78 + 460)} * 14.7 = 19.56 \text{ psia}$$

*c. **Model AOS-100 and AOS-165 transport packages** – Pressure value is based upon design conditions.*

Table 7-4. Maximum Cask Cavity Pressure Due to Fire Conditions – All Models

Model	Volume		Temperature[a]		Pressure			Design Pressure[b]	
	l	in³	°C	°F	kPa	psia		kPa	psia
AOS-025	0.17	10	149	300	143	21	<	207	30
AOS-050	1.36	83	205	401	162	24	<	414	60
AOS-100A AOS-100A-S	11.21	684	174	346	155	23	<	1,931	280
AOS-100B	11.21	684	183	360	155	23	<	1,931	280
AOS-165A	49	2,978	375	707	220	32	<	1,517	220
AOS-165B	49	2,978	232	449	220	32	<	1,517	220

a. Temperature listed is the maximum value obtained throughout Hypothetical Accident conditions of transport events.

*b. **Model AOS-100 and AOS-165 transport packages** – Pressure value is based upon design conditions.*

Table 7-5. Activity Limits – All Models

Isotope[a]	Ci/Watt[b]	Model											
		AOS-025		AOS-050		AOS-100				AOS-165			
		A (10W)		A (100W)		A, A-S (400W)		B (400W)		A (7 kW)		B (2.5 kW)	
		TBq	Ci	TBq	Ci	TBq	Ci	TBq	Ci	TBq	Ci	TBq	Ci
Co-60	6.49E+01	8.73E-03	2.36E-01	1.05E-01	2.84E+00	7.47E+02	2.02E+04	5.99E+00	1.62E+02	1.68E+04	4.54E+05	6.01E+03	1.62E+05
Cs-137	1.99E+02	1.28E+00	3.45E+01	1.28E+01	3.46E+02	2.94E+03	7.95E+04	1.84E+01	4.97E+02	5.16E+04	1.39E+06	1.84E+04	4.98E+05
Hf-181	2.28E+02	–		6.25E+01	1.69E+03	3.38E+03	9.13E+04	9.25E+01	2.50E+03	5.91E+04	1.60E+06	2.11E+04	5.70E+05
Ir-192	1.63E+02	5.48E+00	1.48E+02	3.63E+01	9.81E+02	2.41E+03	6.53E+04	5.77E+01	1.56E+03	4.23E+04	1.14E+06	1.51E+04	4.08E+05
Zr/Nb-95	6.02E+01	–		2.09E+00	5.66E+01	8.92E+02	2.41E+04	3.74E+00	1.01E+02	1.56E+04	4.21E+05	5.57E+03	1.51E+05
C-14	3.41E+03	1.26E+03	3.41E+04	1.26E+04	3.41E+05	–		–		–		–	
Fe-59	1.29E+02	2.16E-02	5.85E-01	2.02E-01	5.46E+00	–		–		–		–	
Ho-166	2.33E+02	1.01E+00	2.74E+01	3.89E-01	1.05E+01	–		–		–		–	
Na-24	3.61E+01	2.58E-03	6.97E-02	1.55E-02	4.19E-01	–		–		–		–	
P-32	2.43E+02	8.98E+01	2.43E+03	8.98E+02	2.43E+04	–		–		–		–	
P-33	2.20E+03	8.15E+02	2.20E+04	8.15E+03	2.20E+05	–		–		–		–	
Sb-124	7.52E+01	1.16E-02	3.13E-01	1.62E-02	4.38E-01	–		–		–		–	
Sc-46	7.94E+01	2.05E-02	5.55E-01	1.05E-01	2.84E+00	–		–		–		–	
Se-75	4.15E+02	1.54E+02	4.15E+03	1.05E+02	2.84E+03	–		–		–		–	
Sm-153	5.15E+02	1.91E+02	5.15E+03	8.73E+02	2.36E+04	–		–		–		–	
Sr/Y-90	1.49E+02	5.52E+01	1.49E+03	5.52E+02	1.49E+04	–		–		–		–	
Sr-89	2.89E+02	1.07E+02	2.89E+03	1.07E+03	2.89E+04	–		–		–		–	
Yb-169	3.98E+02	1.47E+02	3.98E+03	2.10E+02	5.67E+03	–		–		–		–	
Yb-175	1.00E+03	3.70E+02	1.00E+04	2.67E+03	7.21E+04	–		–		–		–	
Shipping Configuration		Use of Liner 183C8485 is required		No additional shielding is required		Use of Axial Shielding Plates 183C8491 may be needed for large-quantity shipments of Co-60		Use of Axial Shielding Plates 183C8491 may be needed for large-quantity shipments of Co-60		No additional shielding is required		Use of Liner 183C8499 is required	

a. *Encapsulated solid material or solid metal that meets Normal or Special form criteria.*

b. *For detailed calculations of these values, refer to Chapter 5, Appendix 5.5.1, "AOS Cask Isotopic Heat Load for Numerous Isotopes Report."*

Table 7-6. AOS Transport Packaging System Certification Drawing List – All Models

Model	Assembly	Rev.	Impact Limiter	Rev.	Cask	Rev.	Liner/Plates	Rev.
AOS-025A	166D8142	A	105E9722	A, "Markup"	166D8143	A, "Markup"	183C8485	A
AOS-050A	105E9718	A	166D8138	A, "Markup"	166D8137	A, "Markup"	–	–
AOS-100A	105E9711	A	105E9713	A, "Markup"	105E9712G001	A, "Markup"	183C8491	A
AOS-100B	105E9711	A	105E9713	A, "Markup"	105E9712G002	A, "Markup"	–	–
AOS-100A-S	105E9711	A	105E9713	A, "Markup"	105E9719	A, "Markup"	183C8491	–
AOS-165A	105E9707	A	105E9709	A	105E9708G001	A	–	–
AOS-165B	105E9707	A	105E9709	A	105E9708G002	A	183C8499	A

MARKUP

7.2 GENERAL INFORMATION

The following lists general information about package operations:

a. Transport package users must develop a detailed operating plan. This plan must include handling and operating instructions based upon this section of the Safety Analysis Report (SAR). The plan should include appropriate quantitative and qualitative criteria for determining that important activities (those activities that demonstrate compliance) have been satisfactorily accomplished.

   It is recommended that the following outline be used in developing such plan:

   1.0 Purpose
   2.0 Tools and Equipment
   3.0 Precautions and Limitations
   4.0 Pre-shipment Evaluation
   5.0 Procedure
      5.1 Pre-lifting Checks
      5.2 Packaging Dismantling
      5.3 Preloading Checks
      5.4 Packing and Assembly Procedure
      5.5 Pre-shipment Checks
      5.6 Methods of Securing Packaging for Transportation
   6.0 Return to Normal
   7.0 Records and Reporting Requirements
   8.0 Reference

b. AOS can provide guidance in the development of such plan.

c. Review maintenance records, to ensure that maintenance and inspection of the packaging are current.

MARKUP

7.3 LOADING OF PACKAGING

Operations at the loading facility must include a span of activities, from receiving and inspecting the package, to preparing the loaded transport package for shipment. Each loading facility must provide fully trained personnel and detailed operating procedures to cover all these activities.

7.3.1 Receiving and Inspecting the Transport Package

To receive and inspect the transport package:

a. Position the transport vehicle in the Receiving Inspection area.
b. Visually inspect the transport package for damage.
c. Verify that the radiation and contamination levels are in compliance with regulatory requirements – Paragraphs 508 and 530 through 532 **[7.1]**, 71.47 and 71.87(i) **[7.2]**, 173.441 and 173.433 **[7.3]**, and 20.1906(b)(3) **[7.4]**.
d. Record any finding(s), and notify the Job Supervisor for proper disposition of the finding(s).

7.3.2 Removing the Transport Package from the Transport Vehicle

To remove the transport package from the transport vehicle:

a. Position the transport vehicle, in the job staging area, for transport package removal. This operation can be aided by use of an overhead crane or forklift truck.
b. Position the spreader bar or forks, then connect the appropriate slings and shackles to remove the personnel barrier.
c. Depending upon site-specific issues, do one or more of the following:
   - Remove the personnel barrier and tie down the hardware.
   - Remove the impact limiters from the cask, then place the impact limiters in temporary storage.
   - Lift and remove the entire package from the transport vehicle, then set down the package. Next, remove the impact limiters from the cask, then place the impact limiters in temporary storage.
d. Remove the cask, using the appropriate rigging equipment.
e. Transfer the cask to the loading area.

Note: *For the Model AOS-025A and AOS-050A transport packages, the upper impact limiter can be removed only to gain access to the cask.*

MARKUP

7.3.3 Preparing for Loading

Note: Repairs and/or replacements require prior AOS notification and approval.

To prepare the transport package for loading:

a. Perform a visual inspection. Note any damage or unusual conditions. If part functionality is impaired, repair or replace the part, as required, and document the repair or replacement, then reinspect the part.

b. Depending upon the particular transport package model, remove the cask trunnions and install a lifting device specific to the facility. If using a forklift to transport the cask, protect the cask surface and secure the cask to the forks by straps. If lifting by crane, with or without a spreader bar, the lifting slings must not make an angle of greater than 30°, measured from the vertical.

c. With proper radiological protection and monitoring, remove the closure lid for visual inspection of the cavity.

d. Record any finding(s), and notify the Job Supervisor for proper disposition of the finding(s).

e. Visually inspect the cask and lid sealing surfaces for damage or foreign material. Repair or replace damage noted, as required, then reinspect.

f. Visually inspect the cask seal for damage. Repair any gouges or cuts in the seal area, as required, then reinspect.

g. Remove the lid plug.

h. Replace the metallic lid seal, before loading.

i. Install the lid guide pins 90° apart. Use of the lid guide pins is mainly required for underwater operation.

MARKUP

7.3.4 Loading of Contents

7.3.4.1 Loading Irradiated Fuel into the Cask

Note: *Not applicable. Fuel is not an authorized content for the AOS Transport Packaging System.*

7.3.4.2 Loading Irradiated Hardware or Other Contents

To load irradiated hardware or other contents:

a. Place the hardware or radioactive material, including isotope sources, into a shoring device (such as a rack, basket, or other such device).

   The liner and shielding plates listed in Table 7-7 are used during the shipment of radioisotope capsules, either in normal or special form.

b. Shore the load within the cavity, if needed.

c. Install the lid plug into the cask.

Table 7-7. Additional Required Shielding

Model	Device	Drawing No.	Rev.	Comments
AOS-025A	Liner	183C8485	A	
AOS-100A AOS-100A-S	Plates	183C8491	A	May be needed for large-quantity shipments of Co-60.
AOS-165B	Liner	183C8499	A	

7.3.4.3 Installing the Cask Closure Lid

To install the cask closure lid, after verifying that the seal is properly installed, use proper rigging to slowly lower the lid onto the cask, over the lid guide pins. Carefully monitor this operation, to ensure that the lid is properly aligned.

MARKUP

7.3.5 Preparing for Transport

7.3.5.1 Removing the Cask from the Loading Area

To remove the cask from the loading area in preparation for transport:

a. Carefully measure the cask radiation levels while removing the cask from the storage basin or cell area.

b. Hand-tighten the lid bolts.

c. Decontaminate the cask to a level consistent with Paragraphs 508 **[7.1]**, 171.87(i) **[7.2]**, and 173.433 **[7.3]**.

7.3.5.2 Securing the Cask Lid

To secure the cask lid in preparation for transport:

a. Torque the lid bolts in a criss-cross pattern, with a final pass all the way around, to ensure even seal compression. (Refer to Table 7-8.)

b. If the cask was loaded under water, drain the cask by removing the drain and vent ports cover and threaded plug. To displace any remaining water within the cavity, flush the cavity with dry air or nitrogen. After the cask is drained and most water has been removed from the cask cavity, vacuum-dry the cavity until 1 torr pressure is obtained. The pressure within the cavity must be maintained at or below 1 torr, for at least 30 minutes. The discharged gas of the vacuum pump is filtered. Figure 7-5 presents a typical vacuum drying system setup and the equipment to be used for this process.

   If the vacuum pump used in this procedure is equipped with a "gas ballast" device, turn off the device during the cask vacuum drying operation. The gas ballast device is used to dry any moisture that may be trapped in the vacuum pump oil. If it is necessary to remove water vapor from the pump oil during the vacuum drying operation, isolate the system. Turn on the gas ballast device until the water vapor is removed from the oil, turn off the gas ballast, then place the system back online.

c. Install the drain port plugs, vent port plugs, and covers after the drying operation is complete, as applicable. Prior to installation, apply pipe thread sealant on the plug thread areas.

MAUP

Table 7-8. Bolt Size and Pre-Torque – All Models

Model	Function	Bolt Size / ASME Standard	Pre-Torque N-m	Pre-Torque lbf-ft
AOS-025	Lid Bolt	3/8-16 UNC-1A / ASME SB-637 UNS N07750 TYPE 3	47	35
	Trunnion Bolt	1/4-28 UNF-2A / ASME SA-193, Grade B6	47	35
	Trunnion Screw	4-40 UNC-2A / ANSI B.18.3	HAND TIGHT	
AOS-050	Lid Bolt	1/2-13 UNC-1A / ASME SB-637 UNS N07750 TYPE 3	85	63
	Trunnion Bolt	3/8-24 UNF-2A / ASME SA-193, Grade B6	108	80
	Trunnion Screw	5-40 UNC-2A / ANSI B.18.3	HAND TIGHT	
AOS-100	Lid Bolt	7/8-9 UNC-1A / ASME SB-637 UNS N07750 TYPE 3	678	500
	Trunnion Bolt	3/4-16 UNF-2A / ASME SA-193, Grade B6	407	300
	Trunnion Screw	1/4-20 UNC-2A / ANSI B.18.3	HAND TIGHT	
AOS-165	Lid Bolt	1 1/4-7 UNC-1A / ASME SB-637, UNS N07750 TYPE 3	1,356	1,000
	Trunnion Bolt	1-12 UNF-2A / ASME SA-193, Grade B6	746	550
	Trunnion Screw	3/16-16 UNC-2A / ANSI B.18.3	HAND TIGHT	

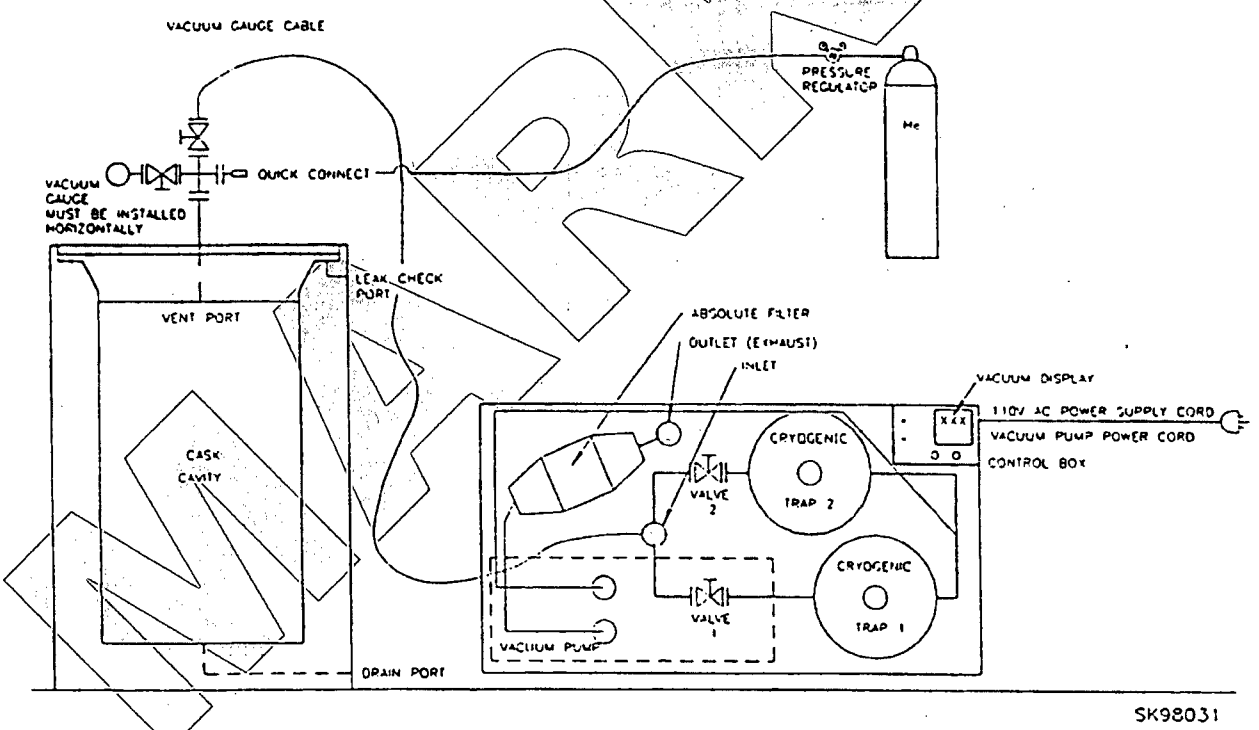

Figure 7-5. Typical Vacuum Drying System Setup and Equipment

7.3.5.3 Performing Assembly Verification Leak Testing ("Normal" Form Content Only)

Note: ***Repairs and/or replacements require prior AOS notification and approval.***

To perform Assembly Verification Leak Testing in preparation for transport:

a. Perform leak testing of the cask closure seal, drain and vent threaded pipe plugs, with a thermal conductivity sensing instrument or mass spectrometer device, sniffer method. These types of instruments are sensitive to detect and quantify the presence of helium in a gas stream. Pressurize the cask cavity with 104 kPa (15 psia) pressure (approximately the same background pressure in the cask cavity, with helium present). Helium can be introduced, using the "quick connect" fitting at the vent port. (Refer to Paragraph 7.3.5.2 for test setup.)

b. Set up the test instrument, in accordance with written procedures and the manufacturer's instructions.

c. With the instrument calibrated to a sensitivity of at least $1 * 10^{-5}$ cm^3/sec (helium), check the package containment by sniffing with the test instrument, through the test port, the volume between seal cross sections and around the threaded joint area of the drain and vent pipe plugs, for indications of leakage.

d. If leakage is detected in the checks performed in step c, repair or replace the malfunctioning component(s) and re-test for leakage (repeat step c).

7.3.5.4 Preparing the Cask for Transport of Irradiated Fuel

Note: *Not applicable. Fuel is not an authorized content for the AOS Transport Packaging System.*

MARKUP

7.3.5.5 Preparing the Cask for Transport of Radioactive Material

To prepare the cask for transporting radioactive material:

a. Transport the cask to the staging area.

b. Remove any site-specific lifting devices from the cask, then install the cask trunnions.

c. **Models AOS-025 and AOS-050** – If the impact limiter was left on the pallet, place the cask in the impact limiter/pallet assembly. If the complete package was removed, then place the bottom impact limiter on the pallet and the cask in the impact limiter. Then, install and secure the top impact limiter.

   Models AOS-100 and AOS-165 – Position the spreader bar or forklift over the cask, for the cask's placement into the shipping cradle, with the proper slings and shackles connected.

d. **Models AOS-100 and AOS-165** – After the cask is properly positioned and secured within the shipping cradle, install and secure the impact limiters.

Note: *Models AOS-025 and AOS-050 require that one impact limiter be installed first on the pallet, before inserting the cask into the pallet.*

e. Apply safety wires and security seals to the latch pins and turnbuckles, as illustrated in Figure 7-6 and Figure 7-7, respectively.

f. Install the personnel barrier, if required.

g. The transport package does not contain any parts nor devices that need to be rendered inoperable, pursuant to Paragraphs 608 **[7.1]**, 71.45(a) **[7.2]**, and 173.410(b) **[7.3]**.

h. Complete the radiological survey of the transport package and transport vehicle, consistent with Paragraphs 508 and 530 through 532 **[7.1]**, 71.47 and 71.87(i) **[7.2]**, 173.441 and 173.433 **[7.3]**, and 20.1906(b)(3) **[7.4]**.

i. Apply the security seal to the overpack, as illustrated in Figure 7-8.

MARKUP

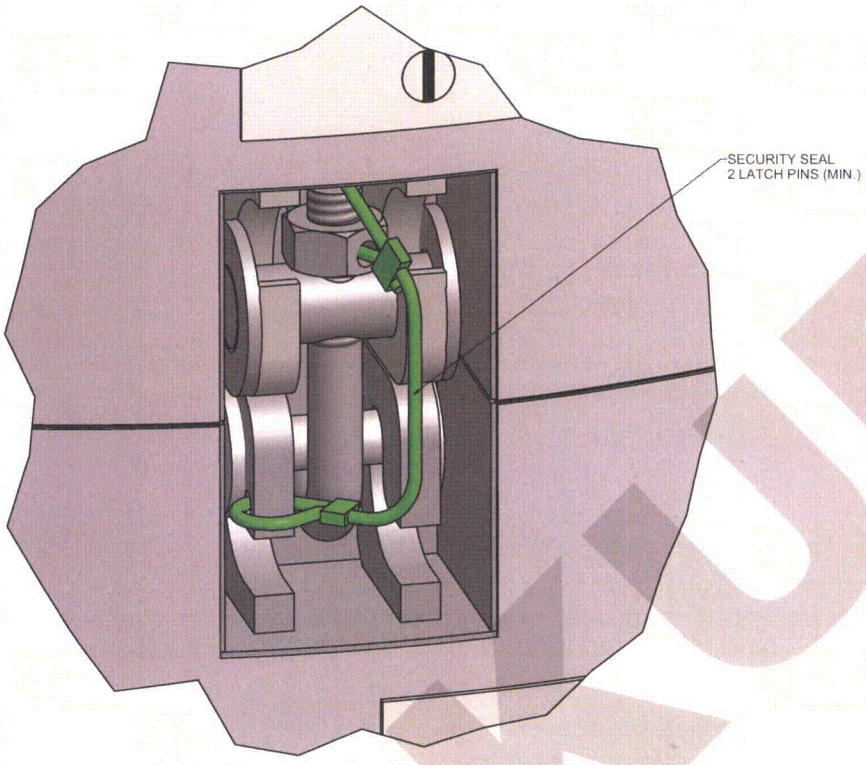

Figure 7-6. Latch Pin Safety Wire and Security Seal

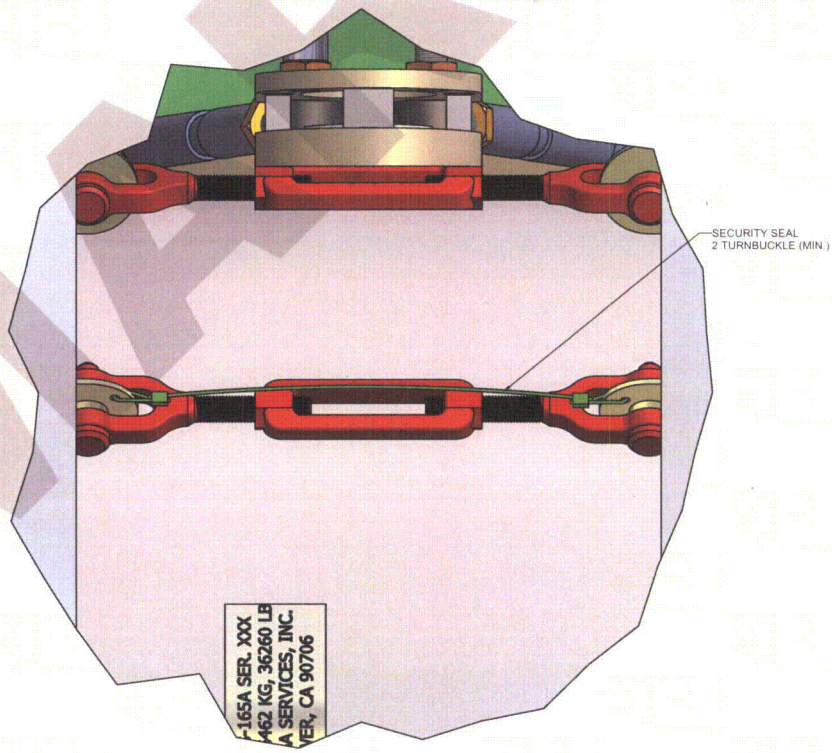

Figure 7-7. Turnbuckle Safety Wire and Security Seal

MARKUP

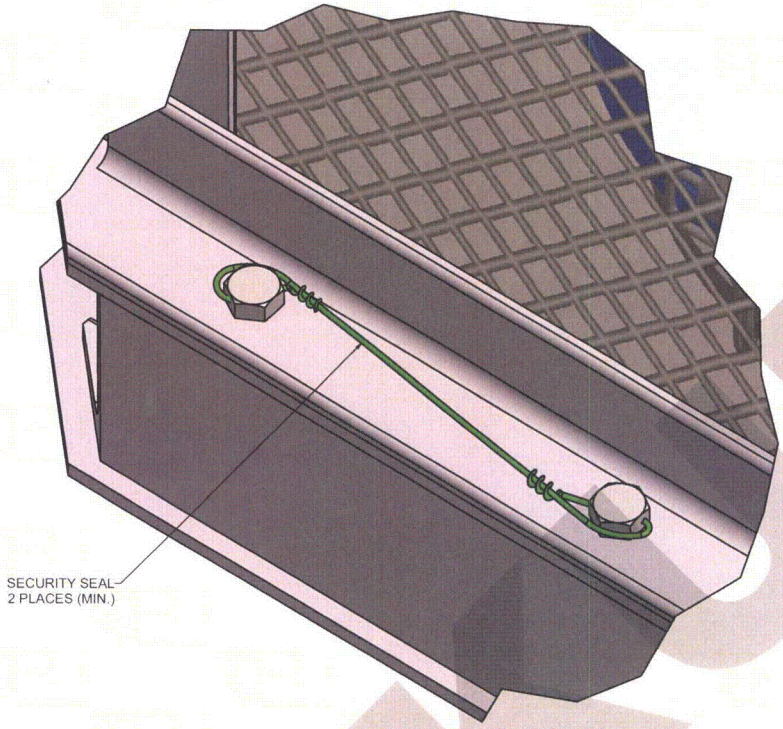

Figure 7-8. Overpack Safety Wire and Security Seal

MARKUP

7.4 UNLOADING THE TRANSPORT PACKAGE

Operations at the unloading facility are largely the reverse of loading operations. Each unloading facility must provide fully trained personnel, and will be supplied with detailed operating procedures to cover all activities, as required by *10 CFR 71.89* **[7.2]**.

7.4.1 Receiving the Transport Package from the Carrier

To receive the transport package from the carrier, repeat steps a through d in Subsection 7.3.1.

7.4.2 Removing the Contents

To remove the transport package contents, repeat steps a through e in Subsection 7.3.2.

7.4.2.1 Preparing to Unload Fissile Material

Note: *Not applicable. Fuel is not an authorized content for the AOS Transport Packaging System.*

7.4.2.2 Preparing to Unload Irradiated Hardware or Other Contents

Note: Repairs and/or replacements require prior AOS notification and approval.

To prepare to unload irradiated hardware or other contents:

a. Perform a visual inspection. Note any damage or unusual conditions. If part functionality is impaired, repair or replace the part, as required. Perform a radiological survey of the cask surfaces, in accordance with the user (site) procedure.

b. If the cask is to be unloaded in air at a waste disposal facility, prepare the cask for unloading, following a procedure developed by the waste disposal facility and reviewed by AOS.

7.4.2.3 Unloading Fissile Material from the Cask

Note: *Not applicable. Fuel is not an authorized content for the AOS Transport Packaging System.*

7.4.2.4 Unloading Irradiated Hardware or Other Contents

To unload irradiated hardware or other contents:

a. Follow a disposal site procedure when unloading irradiated hardware in air at a disposal site.

b. If the irradiated hardware is unloaded underwater or in a hot cell, perform the work as specified by the user (site) procedure.

7.4.2.5 Installing the Cask Closure Lid

To install the cask closure lid, use proper rigging to slowly lower the lid onto the cask, over the lid guide pins. Carefully monitor this operation, to ensure that the lid is properly aligned.

Note: *Verify that the cask contents have been removed and that the cask cavity is empty of any material before placing the lid onto the cask.*

MARKUP

7.4.2.6 Removing the Cask from the Staging Area

To remove the cask from the staging area:

a. Install and hand-tighten the lid bolts.
b. Remove the cask to the storage area.

7.4.2.7 Securing the Cask Lid

To secure the cask lid, repeat steps a through c in Paragraph 7.3.5.2.

7.5 PREPARING AN EMPTY PACKAGE FOR TRANSPORT

This section describes operations that are typically performed after transporting radioactive material.

7.5.1 Inspecting the Cask Cavity

To inspect the cask cavity:

a. Remove the lid and lid plug from the empty cask.
b. Perform a radiological survey of the cavity, to determine the extent of any contamination, in accordance with the user (site) procedure.
c. If the cask is shipped as an empty container, decontaminate the cavity to the limits defined in Paragraphs 520 **[7.1]**, 71.10(b)(1) **[7.2]**, and 173.428 **[7.3]**.
d. Visually inspect the cavity to ensure that all moisture is removed. If moisture is present, dry the cask cavity. (The drying instructions provided in Paragraph 7.3.5.2, or other methods, can be used.)

7.5.2 Installing and Securing the Cask Closure Lid

To install and secure the cask closure lid:

a. Using proper rigging, slowly lower the lid plug and lid onto the cask, over the lid guide pins. Carefully monitor this operation, to ensure that the lid is properly aligned.
b. Torque the lid bolts in a criss-cross pattern, with a final pass all the way around, to ensure even seal compression.
c. Inspect the cask to ensure that the drain port plugs, vent port plugs, and covers are properly installed.

7.5.3 Leak Testing to Verify the Assembly

Note: *Not applicable. Leak testing is not performed on empty containers.*

7.5.4 Preparing the Empty Cask for Transport

Decontaminate the external surfaces of the cask, to a level consistent with Paragraphs 508 **[7.1]**, 71.47 **[7.2]**, and 173.441 **[7.3]**.

WITHDRAWN

7.5.5 Records and Reporting Requirements

7.5.5.1 Records for Each Shipment

AOS Transport Packaging System users must maintain records of their shipments, per the requirement of *10 CFR 71.91* **[7.2]**, for at least two (2) years. In addition, shipment radiological surveys and monitoring must be recorded, per *10 CFR 20.401(b)* **[7.4]**. All records must be maintained, as per requirements documented in *10 CFR 21.51* **[7.5]**.

7.5.5.2 Records for Package History

AOS maintains all historical records of the AOS Transport Packaging System, at their headquarters QA office. These records fulfill the requirements of *10 CFR 71.85* **[7.2]**, and are available to the NRC for inspection, upon request.

7.5.5.3 Reports

All notifications shall be as required by the applicable portion of *10 CFR 21* **[7.5]** and *10 CFR 73* **[7.6]**.

Report all incidents that involve any significant reduction in package effectiveness during use, as well as any defect of safety significance, found after the first use of the package and thereof, any loss or theft of licensed material, radiation exposure to personnel or to the public above the limits specified in *10 CFR 20.403(b)* **[7.4]**, contamination or suspected contamination, and any fire, spillage or breakage, as required by *10 CFR 71* **[7.2]**, *10 CFR 20* **[7.4]**, *49 CFR 171* **[7.7]**, and *49 CFR 174* **[7.8]**.

7.5.6 Other Operations

No other operations are identified at this time.

MARKUP

7.6 APPENDIX

7.6.1 Typical Operating and Maintenance Procedures (for Illustrative Purposes Only)

MARKUP

IDAHO NATIONAL LABORATORY

MATERIALS AND FUELS COMPLEX

Hot Fuel Examination Facility
Operating Instructions

HFEF-OI-6210
GE-2000 Shipping Cask

Revision No.: 2
Effective Date: 1/9/07

Prepared by: C. Tessmer/E. M. Franklin

SAMPLE

Performer(s)	QAL	HAC	Use Type
MH/OPS	B	✓	2

(This page intentionally left blank.)

SAMPLE

REVISION HISTORY

Revision Log

Revision No.	Date Approved	Text Changes [Pages(s)][1]	Type
0	7/16/04	All	New issue
0a	8/13/04	1, 9-24, 26-35, 40-48, 52, 56, 59, 60, and 64	Change
0b	9/7/04	13, 15, 19, 21-28, 32, 34, and 45	Change
0c	12/20/04	1, 10, 12, 14, 17-22, 24, 25, 27-30, 33, 35, 43, 51, 53, 56, 57, 59, and 61	Change
0d	4/26/05	2-6, 9-11, 13-16, 23, 26-33, and 50-53	Change
1	6/26/06	5, 6, 9, 10, 12-23, 25, 26, 28, 30, 31, 33-41, 44-52, and 57	Revision[2]
2	12/20/06	9–10, 12, 14–19, 21–24, 27–31, 33–34, 39–40, and 46	Revision

Summary of Changes – Current Revision

Incorporated field change DAR 512131 and 512513.

REFERENCES – Developmental

1. DOE Standard 1090, *Hoisting and Rigging.*
2. LRD-15001, *Radiological Control Manual.*
3. ANL-W Transportation Safety Document.
4. GE Procedure No. 22A9380, *Operations and Maintenance of Model 2000 Transport Package Specifications Document.*

[1] Excluding front matter.

[2] Including periodic review.

SAMPLE

(This page intentionally left blank.)

SAMPLE

CONTENTS

Title Page ..... i, ii
Revision History ..... iii, iv
Contents ..... v-viii

1. PURPOSE/SCOPE 1
2. SYSTEM DESCRIPTION 2
   - 2.1 GE-2000 Cask 2
   - 2.2 Overpack 3
   - 2.3 Double-Drop Low-Boy Trailer 4
   - 2.4 Clean-Equipment Box 4
   - 2.5 7A Equipment Box 5
   - 2.6 Spreader Bar 5
   - 2.7 Cask-Cart Adapter 6
   - 2.8 Shutter-Shield Assembly 6
   - 2.9 Cask Shield Ring 7
   - 2.10 Transfer-Lid Assembly 8
   - 2.11 Shipping-Basket and Guide 8
   - 2.12 Cask Bag-Out and Lid Removal Sleeves 9
3. ES&H REQUIREMENTS 9
   - 3.1 Radiation/Contamination 9
   - 3.2 Electrical Safety 9
   - 3.3 Elevated Work 10
   - 3.4 Hoisting and Rigging 10
4. PRECAUTIONS/LIMITATIONS 11
5. PREREQUISITES 13
   - 5.1 Planning and Coordination 13
   - 5.2 Approvals and Notifications 14
   - 5.3 Special Tools and Equipment; Parts and Supplies 15
   - 5.4 Field Preparations 19
6. FACILITY CONDITIONS 20

SAMPLE

7. PERFORMANCE SECTION — CASK RECEIPT AND SHIPMENT 20

7.1 Cask Receipt 20

7.1.1 Preparatory Procedures 20
7.1.2 Unloading GE-2000 Cask from Trailer 21
7.1.3 Venting GE-2000 Cask and Replacing Cask Lid 23
7.1.4 Bagging Cask at Penetration 1M1 and Unloading Shipping Basket 27

7.2 Cask Shipment 29

7.2.1 Replacing Cask Lid 29
7.2.2 Pumping Argon from Cask 33
7.2.3 Final Cask-Lid Installation 34
7.2.4 Replacing Cask into Overpack 35
7.2.5 Final Shipping Preparations 37

8. PERFORMANCE SECTION — LOADING TYPE-7A EQUIPMENT BOX 38

9. EMERGENCY PROCEDURES 40

9.1 Fire Alarm 40

9.2 Radiation Alarm 40

9.3 Criticality Alarm 41

9.3.1 Criticality in HFEF 41
9.3.2 Criticality in Another Facility 41

9.4 Site Alert 41

9.5 Site Evacuation 41

SAMPLE

FIGURES

Fig. 1. Model-2000 Transport Package 43
Fig. 2. GE-2000 Cask 44
Fig. 3. Rigging Diagram for GE-2000 Cask-Cart Adapter 45
Fig. 4. Rigging Diagram for the GE-2000-Cask Overpack Cover 46
Fig. 5. Rigging Diagram for GE-2000 Cask 47
Fig. 6. Rigging Diagram for Shutter Shield 48
Fig. 7. Rigging Diagram for GE-2000 Cask Lid 49
Fig. 8. Rigging Diagram for Transfer-Lid Assembly 50
Fig. 9. Rigging Diagram for GE-2000 Shield Ring 51
Fig. 10. Rigging Diagram for GE-2000-Cask Liner 52
Fig. 11. Varian SD-201 Pump-Down Setup 53
Fig. 12. Cask-Lid Bolt Torquing Sequence 54
Fig. 13. Overpack-Cover Tie-Down Diagram 55

APPENDIX

APPENDIX A—List of Approved GE-2000 Cask Products 57

SAMPLE

(This page intentionally left blank.)

Frontmatter page numbers—do not delete this line.

SAMPLE

1. PURPOSE/SCOPE

To provide instructions for handling the GE-2000 transportation package (ref. Fig. 1, Model-2000 Transport Package) at HFEF in accordance with the General Electric-Vallecitos Nuclear Center (GE-VNC), Operations and Maintenance of Model 2000 Transport Package Specification Document. The GE-2000 cask is licensed by the Nuclear Regulatory Commission (NRC) under the licensing certificate USNRC USA/9228/B(U) F-85. The general sequence for handling the GE-2000 cask at HFEF is described in drawing Dwg. W7520-0600-ED, Operational Sequence GE2000 Cask Handling at HFEF. The general handling steps for receipt, unloading, and shipment of the GE-2000 cask are summarized as follows:

- Receive the trailer with the GE-2000 7A equipment box and stage related equipment.
- Receive and stage the cask shutter shield, shield ring, and cask-cart adapter in the truck lock.
- Install the cask-cart adapter on the cask cart and remove the high-bay hatches.
- Receive a dry (empty or loaded) GE-2000 cask, vertically tied down within its assembled overpack into the truck lock.
- Stage the trailer with cask and loosen the tie-down cables prior to disconnecting the transport tractor from the trailer and place 6 × 6-in. blocks under the front of the trailer.
- Remove the overpack tie-downs, unbolt the overpack, and lift the overpack cover off the overpack base.
- Install four auxiliary lifting ears on the cask and hoist the cask onto the cask cart.
- Vent the cask to the cell exhaust system and remove the cask-lid bolts.
- Install the shutter shield and remove the cask lid.
- Install the basket guide and the transfer-lid assembly on the cask.
- Remove the shutter shield and install the shield ring.
- Move the cask under the main cell and bag-in the cask to cell penetration 1M1.
- Lift the inner transfer lid and shipping basket into the main cell.
- Replace the inner transfer lid and bag out the cask.
- Remove the shield ring and place the shutter shield on the cask.
- Remove the transfer lids, shipping basket, and basket guide from the cask.
- Remove the shutter shield.
- Using the elephant trunk and Tygon tubing, evacuate the argon from the cask; then perform a contamination survey, decontaminate as necessary, and verify the internal contaminations limits are within specification.

SAMPLE

- Reinstall the cask lid, pump down the cask, and return the cask to the overpack base.
- Remove the auxiliary lifting ears and reinstall the overpack cover.
- Install the overpack bolts and tie-downs and remove the cask and trailer from the truck lock.
- Receive the GE-2000 7A equipment box trailer; reload related equipment and ship the GE-2000 7A equipment box.
- Replace deck plates and transfer the cart adapter, shutter shield, and shield ring to storage.

Since the cask will be shipped empty from the Materials and Fuels Complex (MFC), it is not necessary to leak test and vacuum dry the cask prior to shipment.

2. SYSTEM DESCRIPTION

2.1 GE-2000 Cask

The GE-2000 cask (ref. GE Dwg. 105E9520, Model 2000 Shipping Cask and Fig. 2, GE-2000 Cask) is an NRC approved, steel-encased, lead-shielded shipping cask owned by GE-VNC, who holds Certificate of Compliance (CoC) USA/9228/B(U)F-85. The cask is designed to transport multiple payloads including irradiated fuel rods, byproduct, source, or special nuclear materials (SNM): irradiated High-Flux-Isotope-Reactor (HFIR) fuel assemblies, irradiated Tower-Shielding-Reactor (TSR) fuel elements; irradiated Materials Test Reactor (MTR)-type fuel assemblies: and Training, Research, and Isotope General Atomics (TRIGA) fuel elements. The GE-2000 cask weighs 23,750 lb. Overall, the transport package (with overpack) is 131.5 in. long by 72-in. diameter (ref. Fig. 1). During shipment, the cask is enclosed within the overpack, which provides impact limiters on the top and bottom ends of the cask. The cask with its 10,200-lb overpack, has a gross package shipping weight of 33,950 lb with maximum payload. The maximum removable weight allowed within the cask cavity (including shoring, baskets, spacers, and radioactive materials) must be ≤5,450 lb.

SAMPLE

The cask body consists of two concentric, 1-in.-thick, 304-stainless-steel cylindrical shells (ASTM 240) joined at the bottom end to a 6-in.-thick 304-stainless-steel forging. The annulus between the two shells is filled with lead approximately 4-in. thick. The cask external dimensions (without overpack) are 71 in. long by 38.5-in. outside diameter (OD). The cask internal cavity dimensions are approximately 54 in. long by 26.5-in. diameter. The cask lid is 8.62 in. thick with a 34.75-in. OD and is made of 304 stainless steel and filled with lead; it has a stepped design and is fully recessed into the top flange. The lid weighs 2,000 lb and contains a preengineered 1-in.-diameter, U-shaped, lid handle welded to the top of the lid for lid removal. The lid is secured to the cask body by 15 1.25-in.-diameter socket-head screws. The cask is sealed by two elastomeric O-rings bonded to a thin aluminum disc-shaped ring. The cask is equipped with a seal test port (located on the side of the cask body), a vent port (located in the cask lid), and a drain port (located at the bottom of the cask on the side). Each port consists of an inner pipe plug and an outer plug cover with an O-ring used to seal the outer plug cover.

The cask is equipped with three types of preengineered cask lifting ears — standard, auxiliary, and optional (or trunnion). For lifts at HFEF, the cask uses the four auxiliary ears that are bolted to a permanent mounting plate welded to the top end of the cask. Each auxiliary ear (weight 40 lb) is attached to the cask using four bolts. The ears must be removed prior to placing the cask within the overpack. The lifting ears, GE-specific overhead handling equipment, leak test, vacuum drying equipment, miscellaneous tools, and supplies are shipped separately from the cask on a second trailer packed within a DOT-7A equipment box.

2.2 Overpack

The GE-2000-cask overpack (ref. GE Dwg. 105E9521, Model-2000 Cask Overpack) is a two-piece impact limiter that completely encloses the GE-2000 cask. A 304-stainless-steel toroidal shell impact limiter is attached to each end of the overpack. The overpack is constructed of 0.5-in.-thick, 304 stainless steel in concentric cylindrical shells and has an overall length of 131.5 in. The impact limiter has a maximum diameter of 72 in. Gussets on the upper and base sections of the overpack sections provide features for lifting and tie down. The overpack cover is bolted on just above the lower impact limiter (overpack base) to allow access to the cask. The overpack bolts are installed horizontally into the side of the overpack. The two sections of the overpack are joined together using 15 1-3/8-in.-diameter shouldered screws. The total weight of the overpack is 10,200 lb.

DRAFT

2.3 Double-Drop Low-Boy Trailer

The GE-2000 transportation package is shipped over the highway using a special double-drop lowboy trailer, which has 10-ft-long front and rear decks, and a 26-ft-long dropped center deck. Clearance between the trailer and roadway is approximately 6 to 8 in. Travel of the trailers carrying the GE-2000 cask and equipment within the MFC site will require escort personnel to ensure that the trailer does not come in contact with the pavement. Once the trailer has arrived at HFEF, it will be inspected to ensure it is undamaged.

The overpack uses eight tie-downs. Each tie-down consists of a turnbuckle and steel cable with a shackle on the outer ends of the tie-down. The bottom shackle is attached to the low-boy trailer D-ring and the top shackle attaches to the gusset eye on the overpack. Four of the eight tie-downs attach to the gussets on the base section of the overpack and the remaining four tie-downs attach to the gussets on the upper section of the overpack. A standard tractor can accommodate the low-boy trailer fifth wheel. However, due to the design of the trailer, tie-downs are torqued only after the tractor used for transport off site is attached to the low-boy to accommodate trailer flexing.

The low-boy trailer arrives at MFC with the GE-2000 cask within its overpack and tied down in the vertical mode. The trailer contains an overpack stand strapped down to the trailer, which is used during unloading to store the overpack cover. The overpack base rests on a 54-in.-square transport base plate that has a 13.5-in.-tall by 22.5-in.-diameter cylindrical ring welded at the center and serves to center the overpack base on the trailer bed. The baseplate is permanently bolted to the trailer bed. The outer edge of the trailer uses 1-1/4-in.-diameter curved bars welded to a 6-in.-square plate attached to the trailer=s outer I-beams.

2.4 Clean-Equipment Box

The clean-equipment box is included with the cask shipment and is located on the rear of the lowboy trailer. This box uses a thumbwheel security lock and contains equipment for installing or removing tie-downs and installation of the cask lifting ears. The clean-equipment box contains a preset-0-100 ft-lb torque wrench, 0-800 ft-lb torque wrench, 0-250 ft-lb dial torque wrench (spare), 1/2-in.-drive breaker bar with a socket and Allen wrench, two 1-1/2-in. open-end/box wrenches, turnbuckle ratchet wrench, 1-in.-drive breaker bar, pump oil, and NUPRO 5000 anti-seize compound.

CANCELLED

2.5 7A Equipment Box

The GE-2000 7A equipment box is shipped in a DOT-Type 7A box on a separate trailer from the GE-2000 cask. The equipment box contains seven individual item boxes that include a 375 lb auxiliary lifting ear box, 380-lb standard lifting ear box, 235-lb chain hoist box, 40-lb wrench box, 375-lb drying box, 10-lb spare bolt box, and a 30-lb leak detection box (ref. FRM-357, 7A Equipment Box Checklist, Fig. 1, 7A Equipment Box Storage Locations). The equipment box also includes a 40,000-lb-rated GE-2000-cask spreader bar weighing 1,370 lb, a rigging accessories drum weighing 268 lb, an optional spare cask seal, and a drum spreader weighing 28 lb.

Prior to use and shipping, an inventory is taken of the equipment box and the equipment certifications (calibration and load test) are reviewed and verified to be current. The DOT 7A equipment box is required to be tied down on the trailer prior to shipment in a condition identical to the as-received condition. The equipment box will normally be received in advance of the GE-2000 cask on a separate trailer. Prior to handling the GE-2000 cask, all equipment serial numbers, certification tags, and load test and calibration records related to equipment used at MFC must be reviewed and evaluated for acceptance and readiness for use by MFC personnel.

2.6 Spreader Bar

The GE 2000 spreader bar [minimum working load limit (WLL) 40,000 lb] (ref. GE Dwg. 105E9510, GE 2000 Spreader Bar) is a symmetrical X-shaped, four-point lifting bar specifically designed for lifting the GE-2000-overpack cover and the GE-2000 cask. The spreader bar has a 3-1/2-in. center lift pin that attaches to the overhead crane hook at the center of the lift bar. Each of the four lift points (located at the outer ends of the spreader bar) provide for shackle attachments. Shackles located at each of the four corners of the spreader bar are used for connecting the steel cables that are connected to the cask lifting ears or overpack gussets with matching shackles. The shackles, steel cables, and spreader bar have been designed specifically by GE-VNC for lifting the GE-2000 cask and overpack. Certifications and load-test records are included with the GE-2000 7A equipment box and are shipped with the cask. The spreader bar is shipped to MFC within the GE-2000 7A equipment box.

SAMPLE

2.7 Cask-Cart Adapter

The GE-2000 cask-cart adapter (ref. Dwg. W7520-0602-EE, GE-2000 Cask Operations) is used to support the cask on the cask cart. The adapter is 26.625-in.-long cylindrical-body container with a rectangular-cart mating plate at the top that weighs 6,400 lb and has a 46.25-in. OD and an inside diameter (ID) to accommodate the cask by resting the base of the cask on the inside bottom of the adapter. The bottom half of the adapter ID is tapered and reduces the ID to approximately 39.5 in. to accommodate the GE-2000 cask. The adapter lowers the bottom of the GE-2000 cask approximately 2 ft below the cask-cart personnel-floor level. The adapter has three permanently-installed polyethylene guides that are spaced 120° apart on the inside of the adapter, they act to guide the cask into the adapter. After the cask has been loaded into the adapter on the cask cart, technicians must manually place three large 10-in.-long polyurethane spacer blocks (as needed) between the cask and the inside diameter of the adapter to center the cask.

During handling operations, a stainless-steel plate is added to the inside bottom of the adapter for the cask to rest on. There are two 1-in.-8 UNC lifting points on the top of the adapter to allow installation of 1-in. swivel eyes to be threaded through the holes of the 1.5-in.-thick stock plate.

2.8 Shutter-Shield Assembly

The shutter shield (ref. Dwg. W7520-0609-EE, Shutter Shield Assembly) is an MFC-designed manually-operated 7,000-lb sliding shield that is placed over the top of the cask to shield personnel from additional radiation during lid change-out operations in the HFEF-truck-lock hatch. Because the cask cavity does not use an internal shield plug, the cask lid must be removed and replaced with an MFC-designed two-piece concentric lid. The shutter shield is designed for placement on top of the cask and has a manually-operated sliding shield and a bagging ring built into the top shutter shield. A 1/4-in.-thick neoprene gasket, 39.5-in. OD by 35.25-in. ID, is placed between the bottom of the shutter shield and the top of the cask to provide a seal. The shutter is equipped with a manual handwheel that moves the shutter door open and closed. A manual stop is included to prevent overdriving the door in either direction. A handle with a chain loop (for positioning the locking handle) is also provided. The shutter is lifted and handled using three, permanently-installed, 3/4-in.-10 UNC swivel eyes, each rated for a minimum WLL of 5,000 lb. A removable brace is included with the shutter shield to steady the shutter when the shield door is opened on the cart. The brace is bolted to the cart adapter using the 1-in.-8 UNC bolt hole on the east end of the cart. The brace extends up under the shutter crossbar and is locked into position using jam nuts (ref. Dwg. W7520-0676-ED, GE-2000 Shutter Shield Brace Assembly).

Following cask venting, the cask-lid bolts are removed and the shutter shield is placed on top of the cask. Rigging is then attached between the crane and the cask lid, and the lid removal bag is installed. The shutter-shield door is then slid open using three to four rotations of the hand wheel. The cask lid is raised just above the shutter door and the shutter door is immediately closed providing shielding for the cask. The cask lid is then lifted high enough to seal the bag from the cask and remove the lid from the area. A new bag is installed, the old bagging stub removed, and the operation is reversed to reinstall the inner- and outer-transfer lid. When the inner- and outer-transfer lid is in place, the shutter shield is removed and replaced with the shield ring. In this condition, the cask can then be mated and bagged to the HFEF main-cell penetration and the inner transfer lid pulled up into the main cell, allowing access to the shipping basket.

2.9 Cask Shield Ring

The cask shield ring (ref. Dwg. W7520-0624-EE, Shield Plug) mates the top of the cask to main-cell penetration 1M1, it has a 1/4-in.-thick, 50 to 70 durometer, neoprene gasket that is glued to the bottom of the shield ring to seal it to the cask. The shield ring provides personnel with radiation-shielding protection and payload containment. The top of the shield ring has a 23 in. ID bagging ring welded to the top of the shield; it is used to bag-in the cask to cell penetration 1M1. The shield ring weighs 4,750 lb and has three 3/4-in.-10 UNC, 1.5-in.-deep bolt holes for lifting and placing it on top of the cask. The shield ring has a 49-in. OD and is 15.625 in. high. The bottom of the shield ring is equipped with a two-piece circular, 1.5-in.-thick, polyethylene cask protector that is used to guide the shield ring onto the cask.

SAMPLE

2.10 Transfer-Lid Assembly

A transfer-lid assembly designed by MFC replaces the cask-supplied lid to provide additional shielding during cask handling and bag-in operations. A two-piece concentric lid assembly consisting of both an outer- and inner-lid plug make up the assembly. The inner transfer lid (ref. Dwg. W7520-0604-ED, Inner Transfer Lid Weldment) is a 17-in.-OD by 15.5-in.-ID, 7.5-in.-thick, 304-stainless-steel, flanged cylindrical plug. The inner transfer lid is lifted into the hot-cell allowing for the shipping basket to follow. The inner lid has a 1-in.- 8 UNC threaded hole in the top center of the lid for screwing in a standard HFEF-waste-can screw grapple. The inner transfer lid weighs 600 lb and rests on top of the outer transfer lid. A 1/4-in.-thick, 17.5-in.-OD by 16-in.-ID neoprene gasket is glued to the underside of the inner-lid flange. The outer replacement transfer lid (ref. Dwg. W7520-0603-ED, Lid Transfer) is a flanged 34.75-in.-OD plug with a 16.25-in.-ID opening to accommodate the inner-transfer plug. The outer transfer lid is made from 304 stainless steel and weighs 750 lb. The outer transfer lid rests on the casks existing double O-ring seal. The outer transfer lid has three 3/4-in.-10 UNC lifting eyes. During lid changeout (at the truck lock hatch), both the inner and outer lids are assembled and rigged for loading onto the cask as one unit.

2.11 Shipping-Basket and Guide

During shipment the cask cavity contains a payload shipping basket (Dwg. W7520-0607-ED, Shipping Basket Weldment) and a basket guide (Dwg. W7520-0608-ED, Guide Basket). The basket guide is used only to center and space the payload shipping basket within the cavity of the GE-2000 cask. The basket guide weighs 45 lb. The shipping basket weighs 35 lb empty.

The payload shipping basket has an overall assembled height of 53.463 in. and an OD of 15 in. The outer perimeter of the shipping basket contains 17 cylindrical slots for loading samples and tubes. The shipping basket is fitted with standard pole piece at the top center of the basket for grappling and lifting the basket between the cask and main cell. The basket guide has an overall length of 52.5 in. and a maximum OD of 26 in. The top of the basket guide is fitted with movable a 0.75-in.-diameter bail for lifting the basket. Both the bottom and top of the basket guide is open to allow the shipping basket to pass through. The bail on the basket guide is rotated to one side at the top of the basket during shipment and can be rotated up for lifting the basket guide.

SAMPLE

2.12 Cask Bag-Out and Lid Removal Sleeves

GE-2000 cask handling operations use three different bags — a clear 10-mil-thick polyurethane bag (ref. Dwg. W7520-0606-EE, 114-in. Long-Sleeve, Bag Out), a clear 10-mil-thick polyurethane half-size bag (ref. Dwg. W7520-0636-EE, Sleeve, Half-Size Bag Out), and an 8-mil-thick yellow PVC bag (ref. Dwg. W0147-0619-EE, Bag, Containment). The clear bags are used at the truck-lock hatch; they are placed on the sliding shield door for cask-lid change out and removal of the empty baskets from the cask cavity. These two clear-polyurethane bags each contain three sleeve arms and are open at the bottom and closed at the top. The yellow PVC bag uses hoops installed on the outer perimeter of the bag connected by dowels to maintain the bag inflated, it is used between the upper bagging ring on the cask shield ring and main-cell ceiling-penetration-1M1 bagging ring during bag-in operations at the main cell.

3. ES&H REQUIREMENTS

3.1 Radiation/Contamination

3.1.1 A Radiological Work Permit (RWP) is required to perform this procedure.

3.1.2 When venting the cask to the cell exhaust system, personnel must wear respiratory protection (as a minimum) until contamination levels have been determined, unless otherwise specified on the RWP.

3.1.3 Use of the shutter shield door on the GE-2000 cask when a payload exists in the cask requires continuous Health-Physics-Technician (HPT) coverage.

3.1.4 Prior to using the elephant trunk (vented to the cell exhaust system), it must be verified that the black flexible vent hose is securely clamped to the metal extension on the elephant trunk to prevent the hose from being disconnected and releasing contamination.

3.1.5 The cavity may be pressurized due to a change in altitude during shipment. Therefore, the cask must be vented to the cell exhaust system (using the elephant trunk) prior to lid removal to avoid personnel contamination.

3.2 Electrical Safety

The electrical-related activities covered by this procedure must only be performed by qualified electrical workers (or personnel that have received qualification-exemption approval) following the guidelines of, and using appropriate personal protective equipment (PPE) as specified in, the LRD-14113, *Electrical Safety*.

SAMPLE

3.3 Elevated Work

3.3.1 To prevent personnel injury, all personnel standing in the deck-plate area within 6 ft of a removed deck plate must be wearing a fall-restraint device (ref. LRD-14111, *Fall Protection)* attached to an eyebolt in an adjacent deck plate. The operators must be anchored in such a manner that the restraint device will prevent them from crossing the threshold of the removed deck plate.

3.3.2 When the cask-tunnel hatches are open, the safety railings and toe boards must be in place or approved fall protection used by personnel within 6 ft of the opening.

3.3.3 Personnel entering the opened deck-plate area of the high bay must don a fall-restraint device and attach it to an adjacent deck plate prior to entry.

3.4 Hoisting and Rigging

3.4.1 The crane and all rigging and tackle (ref. Subsection 2.5, 7A Equipment Box) used must have certifications meeting the requirements of LWP-6500, *Hoisting and Rigging at the INL.*

3.4.2 All rigging tackle must be examined before use. Rigging tackle that does not meet the rigging examination requirements must be rejected and not used. Rejected MFC equipment is returned to Materials Handling-Services.

3.4.3 The cask lifts performed in this procedure have been classified as critical lifts all other lifts are classified as preenginered-production lifts. A critical lift person-in-charge (CLPIC) must be designated in the procedure for each cask lift.

3.4.4 All personnel must stand clear when lifting the cask or overpack.

SAMPLE

4. PRECAUTIONS/LIMITATIONS

4.1 Summary of specifications, operating limits, and weights are as follows:

Parameter			Specification/Limit/Weight
Overpack (w/o cask)	Weight:	Gross	10,200 lb
	Dimensions:	Length	131.5 in.
		Diameter (max):	72.0 in.
GE-2000 cask	Weight:	Gross shipping:	23,750 lb
		Lid:	2,000 lb
	External dimensions:	Length:	71.0 in.
		Diameter:	38.5 in.
	Internal dimensions:	Length:	54.0 in.
		Diameter:	26.5 in.
Spreader-bar weight:			1,370 lb
Shutter-shield weight:			7,000 lb
Cask-cart-adapter weight:			6,400 lb
Cask-shield-ring weight:			4,750 lb
Outer-transfer-lid weight:			750 lb
Inner-transfer-lid weight:			600 lb
Basket-guide weight:			45 lb
Shipping-basket (empty) weight:			35 lb
Cask liner			4,500 lb
Maximum internal cavity weight (spacers, payload basket, payload, shielding, etc.)			≤5,450 lb
Overpack and cask (loose surface contamination limits, empty cask)*	DOT regulatory interior/exterior loose surface contamination limits (49CFR173.443 and Spec. 22A9380, Section 6.3.3(c)*		<2,200 dpm/100 cm^2 beta-gamma and < 220 dpm/100 cm^2 alpha (based on an average surface area of 300 cm^2)
GE-VNC shipping contamination limits (Ref. Spec. 22A9380, Section 6.3.3(c)	Additional GE-VNC, GE-2000 cask exterior limits		<100 cpm beta/gamma and <200 dpm/ft^2 alpha (These limits meet the GE-VNC definition of Aclean@ or Anon smearable.@)

* The listed DOT limits for contamination reflect regulatory limits that may be received with the GE-2000 cask and overpack. For shipments from MFC, the overpack surfaces and the exterior of the shipping cask should be free of loose surface radioactive contamination

Parameter		Specification/Limit/Weight
Overpack and cask DOT direct radiation limits	Exclusive-use-only shipment:	1,000 mR/hr beta-gamma on the surface of the overpack.
	Any shipment:	200 mR/hr beta-gamma and neutron at the external truck surface (vertical plane of the truck).
		10 mR/hr beta-gamma and neutron at 6 ft from the vertical plane of the truck.
		2 mR/hr beta-gamma and neutron at any normally occupied space.

4.2 Major sections of this procedure may be performed in different orders, with step-by-step use required within each major section.

4.3 The double-drop low-boy trailer clears the pavement by approximately 6 in. Therefore, the path of travel between the MFC gate to HFEF must be walked down at the time the shipment is received to ensure no obstructions exist that would result in the trailer not clearing the pavement during travel.

4.4 Prior to unhooking the tractor from the cask double-drop lowboy trailer, the overpack tie-downs must be loosened. This requirement applies for all cask receipts, including weekends and back-shift.

4.5 HPT coverage will be required during the 7A equipment-box inventory. The 7A Equipment Box Checklist (ref. FRM-357), must be completed upon receipt of the equipment box and also just before the return shipment to verify all components and contents are accounted for and equipment box internal and external surfaces meet the contamination limits of 49CFR173.443.

4.6 Forms FRM-358, GE-2000 Cask Receipt Checklist, and FRM-359, GE-2000 Cask Shipment Checklist, must be completed for receipt/shipment of the cask. Any unsatisfactory results should be described in the Comments Section of the applicable form. Completed forms (with applicable shipping documents) must be forwarded to the systems engineer for retention and copies sent to GE.

4.7 Only the approved products listed in Appendix A, List of Approved GE-2000 Cask Products, are allowed to be used in the operation of the GE-2000 cask. Products other than those listed require special written permission prior to use from GE-VNC.

SAMPLE

4.8 Personnel handling the cask must be trained and qualified in accordance with LWP-12003, *Individual Training Plans*. Initial training is also required by the GE Representative prior to the first use of the GE-2000 cask.

4.9 Before performing venting operations at the truck-lock hatch, it must be verified that the vacuum pump is vented to the cell exhaust system.

4.10 No labels are allowed to be placed directly on the base metal of the cask. To affix any labels, GE-VNC supplied 3M white scotch tape (No. 483) must be applied to the specific cask location first and then the label may be applied on top of the 3M white scotch tape.

4.11 When removing the penetration-1M1 outermost floor plug, if not already removed, the funnel must be removed from the plug at a safe distance from the penetration and as close to the cell floor (as possible) to prevent the funnel from falling into the open penetration.

4.12 The GE-2000 cask is a quality assurance (QA) level-B system. Therefore, replacement parts require written concurrence from GE-VNC and independent verification by the Work Supervisor or systems engineer to ensure that correct parts are installed (ref. AWP 2.12, *Identification and Control of Items*). This verification of replacement parts must be documented in FRM-358.

4.13 The 1-in. diameter lid handle welded to the top of the GE-2000 cask lid is designed by GE-VNC to lift the cask lid only.

4.14 As the cask is owned and maintained by GE-VNC, all scheduled cask maintenance will be performed by GE personnel. If a problem with the cask arises while the cask is at HFEF, the systems engineer must be notified immediately to obtain concurrence from GE-VNC personnel regarding problem resolution. Replacement of parts on the GE-2000 shipping package or cask require prior written authorization from GE-VNC.

5. PREREQUISITES

5.1 Planning and Coordination

[1] Work Supervisor — Perform the following:

[a] Loosen the tie-downs on the cask trailer prior to either hooking up or removing the tractor from the trailer.

[b] Obtain and initiate a copy of FRM-357.

SAMPLE

[c] Initiate a work request for Materials Handling- Services personnel to perform the following:

- Unloading and staging the GE-2000 7A equipment box upon arrival
- GE-2000 cask-cart adapter placement
- Transferring the shutter shield
- Shield ring lift
- GE-2000 spreader-bar lifts and moves
- GE-2000 overpack lift
- GE-2000 cask lifts
- Moving the overpack onto the rear of the trailer with tie-downs in place and hand tightened.

[d] Verify the appropriate RWP is in place.

[e] Conduct a prejob briefing with the systems engineer, Crew Supervisor, process operations crew, and HPT, including a review of the proper PPE equipment and RWP requirements for all cask handling operations.

[f] Inspect work areas in the truck lock and high-bay area to ensure readiness to receive the GE-2000 cask trailers and available room for equipment set down.

5.2 Approvals and Notifications

[1] Notify the Facility Area Supervisor (FAS) that the elephant trunk will be used to vent the cask and that cask-handling operations will be commencing.

WARNING

To prevent personnel injury, all personnel standing in the deck-plate area within 6 ft of a removed high-bay area deck plate must be wearing a fall-restraint device (ref. LRD-14111) attached to an eyebolt in an adjacent deck plate. The operators must be anchored in such a manner that the restraint device will prevent them from crossing the threshold of the removed deck plate.

[2] Notify the FAS that the high-bay deck plates will require removal prior to receiving the GE-2000 cask trailer in the HFEF truck lock.

[3] Notify the CWI Transportation Group that the tractor/trailer path from the MFC entry gate to HFEF must be examined and verified to have sufficient trailer clearance.

SAMPLE

[4] Notify the CWI Transportation Group, HFEF FAS, and Materials Handling Supervisor, that prior to removing or connecting a tractor from or to the cask double-drop lowboy trailer, the tie-downs must be loosened and 6 × 6-in. blocks placed under the front of the trailer to allow tractor installation/removal and prevent torsion on the trailer body.

[5] Notify the HPT that the special low-boy trailer will require a contamination survey prior to bringing the GE-2000 7A equipment box and trailer into the truck lock.

[6] **Materials Handling-Services, Systems Engineer, and Work Supervisor** — Obtain and review (for proper certification) the GE-2000 cask-equipment certifications and annual inspection records prior to using the GE-2000 7A equipment box handling equipment.

[7] **Work Supervisor** — Verify that technician training has been satisfactorily completed for all personnel using the GE-2000 cask and handling equipment.

[8] **Systems Engineer** — Review the shipping papers provided by the CWI Transportation Group.

5.3 Special Tools and Equipment; Parts and Supplies

NOTE	Step 5.3[1] must be independently verified by the Crew Supervisor or systems engineer. Independent verification will be documented in FRM-358.

[1] Obtain the following MFC items (with current calibration stickers, where applicable), and document mechanical and test equipment (MT&E) in FRM-358:

- GE-2000 cask-cart adapter with the stainless steel plate in bottom of adapter
- GE-2000 cask shield ring with neoprene gasket
- Shutter shield with neoprene gasket
- Impact wrench with 3/4- to 5/8-in. adapter
- Outer transfer lid (ref. Dwg. W7520-0603-ED) containing the inner transfer lid with neoprene gasket (ref. Dwg. W7520-0604-ED)
- Basket guide (ref. Dwg. W7520-0608-ED) (if required)
- Three-legged wire rope bridle (minimum WLL 7,000 lb at 45°) (for handling the shutter shield, shield ring and transfer lids) (for crane hook to spreader bar)
- One basket-hitch or vertical sling (minimum WLL 40,000 lb)
- Four 11-ft-long (minimum) nylon slings (minimum WLL 17,000 lb) (for lifting the cask)
- Four shackles (minimum WLL 17,000 lb) (for cask auxiliary-ear attachment to lift the cask)

SAMPLE

- Two 1-in.-8 UNC swivel eyes (minimum WLL 4,600 lb) (to lift the GE-2000 cask-cart adapter)
- Three, 3/4-in.-10 UNC swivel-eyes (minimum WLL 3,400 lb) (for lifting cask adapter, shield ring, and assembled inner and outer transfer lids onto the cask in the truck-lock hatch)
- Preengineered T-bar screw grapple and sling (minimum WLL 1,000 lb) (ref. Dwg. W0066-0383-ED) (for lifting the 600-lb inner transfer lid onto the outer transfer lid in the truck lock)
- Torque wrench (0 to 300 ft-lb) (for installing swivel eyes on cart adapter, shield ring and outer transfer lid)
- Chain fall (minimum WLL 2,200 lb) (for removing the cask lid and the assembled inner and outer transfer lids)
- Dynamometer or load cell [0 to 2,200 lb (minimum)] (for removing the cask lid)
- 8-ft step ladder (to access the top of the overpack and cask)
- Two nylon slings, 4-ft minimum length (minimum WLL 4,600 lb) (for lifting the cart adapter)
- Two shackles (minimum WLL 4,600 lb) (for lifting the cask cart adapter)
- 4 by 4-ft, 3/4-in.-plywood (to set the cask lid down in the HFEF truck lock)
- Chocks (for bracing trailer wheels in the HFEF truck lock)
- One 6 × 6-in. 5-ft-long or two 6 × 6-in. 1-ft-long wooden block(s) (to place under the front end of the double-drop low-boy trailer to maintain trailer height for tractor connection of the fifth wheel).

[2] Obtain the following MFC items:

- 9-in.-tall L-shaped lid removal gauge
- Bagging sleeve (ref. Dwg. W0147-0619-EE) with hoops and dowels (ref. Dwgs. W0213-0171-EC and -0172-EB) or the SLSF bag-in sleeve (ref. Dwg. W0093-0107-DE, SLSF Bagging Sleeve) (for cask bag-in to main-cell penetration 1M1)
- Bagging sleeve (ref. Dwg. W7520-0606-EE - Sleeve, Bag Out) (for removing the shipping basket and guide from the cask)
- Sleeve, bag-out half sleeve (ref. Dwg. W7520-0636-EE - Sleeve, Half Bag-Out) (for removing the shipping basket and guide)
- Varian vacuum pump (Model No. SD-201) (for removing argon from the cask cavity following bag-out operations, using a filter, vacuum gauge, and hoses)

SAMPLE

- KWIK-flange connections with flex hose (for adapting the GE-2000 three-way leak test/ evacuation tool to the Varian SD-201 vacuum pump)
- Three cask-cart polyurethane stabilizing blocks from the Transnuclear Fort St. Vrain (TN-FSV) storage box (ref. Dwg. W0147-0678-EC)
- HPT decontamination and smear materials from the list of approved materials in Appendix A
- Wire rope sling (minimum WLL 100 lb) (for lifting the 45-lb basket guide from the cask after bagging out from the main-cell penetration).

[3] Stage the following MFC equipment at main-cell penetration:

- Blotter or plastic paper (to place under 1M1 floor plugs)
- 83-in. waste-can screw grapple (ref. Dwg. W0147-0253-DD, Screw Grapple) (for removing the inner transfer lid)
- Standard 85-in.-long latch grapple (ref. Dwg. W0147-0064-DE - Grapple Assembly Waste Can Handling) (for in-cell crane lifts of the shipping basket)
- Square polyvinyl chloride (PVC) plastic or blotter paper (to set down the inner transfer lid at main-cell zone 1M)
- Outer floor-plug storage container (available in zone 1M).

[4] Identify the following GE-VNC-supplied cask handling items:

- 40,000-lb spreader bar (stored in its GE-2000 7A equipment box) with four 1-3/8-in. shackles attached at each corner
- Four auxiliary or standard ears and ear-attachment bolts
- Four 10-ft-long steel lifting cables with 1-3/8-in. shackles attached (for lifting the cask) (if required)
- Four 3/4-in. tie-down cables (for lifting the overpack cover to the overpack stand)
- Four 1-3/8-in. shackles attached to overpack cover gussets (for lifting the overpack cover to the overpack stand)
- Eight tie-down turnbuckles (for connecting tie-down cables)
- Eight 7/8-in. cables (for overpack tie-down to trailer)
- Cask-lid handler and shackle (for lid removal at the truck-lock hatch)
- Torque wrench, capable of 0 to 800 ft-lb, with 48-in. extension handle (for tightening cask auxiliary ear bolts)

SAMPLE

- Torque wrench (0 to 250 ft-lb) with a gear-head torque multiplier and reaction bar to obtain 690 ft-lb (for tightening the cask-lid bolts)
- Torque wrench, capable of 50 to 250 ft-lb [for tightening the overpack bolts (preset to 100 lb)]
- Gear-head torque multiplier (4×) (for removing and tightening cask lid and auxiliary-ear bolts)
- Reaction bar (for use with the torque multiplier)
- Breaker bar, 1/2-in. drive (for removing the overpack bolts)
- Turnbuckle ratchet wrench (for loosening or tightening the tie-down cables)
- Extension, 1-in.-square driver to clear the auxiliary ear
- 2-in. combination wrench (for tightening the turnbuckle nuts)
- 3/4-in. to 1-in. drive adapter (to connect the torque wrench and multiplier to the cask lid and auxiliary-ear bolts)
- 1-5/8-in. socket with 7-in. extension (for use on the auxiliary-ear bolts)
- 7/8-in. hex-head drive (for the cask-lid bolts)
- 5/8-in. hex-head drive (for the overpack bolts)
- 3/8-in. Allen wrench (for the cask vent-port-plug and port cover removal and installation)
- GE three-way leak test/evacuation adapter (Cross fitting) with red vent-port-plug connection and green and blue hand valves attached (for installation on the cask-lid vent port during pump down of the cask)
- Fel-Pro N-5000 Nickel Graphite (for lubricating cask lid and auxiliary-ear bolts)
- Vibra-Tite bolt compound (for overpack bolts)
- Teflon tape (for use on cask lid vent port)
- Tape, duct tape, Scotch brand (Nos. 226, 480, 483, 850 or 5413, 3M Corp. St. Paul, MN) (for taping down or closing bagging materials).

[5] Verify that all GE-VNC MT&E have unique identification numbers, unbroken seals on the torque wrenches, and proper documentation for certification and/or calibration and load testing.

[6] Verify that all MFC-supplied slings, shackles, swivel eyes, torque wrenches, load cells, and wire rope bridles intended for use on the GE-2000 cask have current certification.

[7] Record the torque-wrench and dynamometer serial numbers and calibration data in FRM-358.

SAMPLE

5.4 Field Preparations

[1] Prior to positioning the trailer with the GE-2000 cask and overpack in the truck lock, perform the following:

[a] Move the overpack storage stand to the rear of the cask trailer and strap it down to the trailer to secure it from movement.

[b] Clear the high-bay area and truck lock (as needed) to handle the trailer, cask, overpack, spreader bar, and equipment box.

[c] **Materials Handling-Services/OPS** — Obtain wheel chocks for use on the trailer wheels prior to unloading the cask from the trailer.

[d] **Materials Handling-Services/OPS** — As needed, stage the GE-2000 7A equipment box in the truck lock or on the trailer.

[e] Notify Operations personnel to remove the high-bay-area deck plates in preparation for lifting the GE-2000 overpack (ref. HFEF-OI-2131, *Truck Lock Operation*).

[f] If used, obtain the equipment box(es) key(s) and unlock the box(es). Give the equipment box key(s) or lock combination(s) to the FAS for storage in the facility key cabinet.

[g] **HPT** — Perform a contamination survey of the external surfaces of the 7A equipment box; verify results are acceptable and document completion in FRM-358 (ref. limits for overpack and cask loose surface contamination limits of precaution/limitation 4.1).

[h] **Materials Handling-Services/OPS** — Remove the GE-2000 cask rigging equipment from the equipment box and stage it in the north end of the truck lock.

[i] **HPT** — Perform contamination survey internal of 7A Equipment box, and record results in FRM-358.

[j] Prepare the cask cart to receive a standard length cask (ref. HFEF-OI-3130, *Cask Tunnel and Cart Operation*).

[k] **Materials Handling-Services/OPS** — Install the cask-cart adapter on the cask cart (ref. Fig. 3, Rigging Diagram for GE-2000 Cask-Cart Adapter, and HFEF-OI-3130, *Cask Tunnel and Cart Operation*).

[l] **Materials Handling-Services/OPS** — Install the GE-2000 40,000 lb spreader bar and rigging on the high-bay crane (ref. Fig. 4, Rigging Diagram for the GE-2000-Cask Overpack Cover).

[m] Verify the elephant trunk is functional and the metal extension is securely attached.

[n] Verify the main-cell storage location for the shipping basket is ready to receive the basket.

[o] Review the shipping papers to verify cask contents.

SAMPLE

6. FACILITY CONDITIONS

[1] **FAS** — Verify that the building-laboratory and cell-exhaust systems are operating properly.

7. PERFORMANCE SECTION — CASK RECEIPT AND SHIPMENT

7.1 Cask Receipt

7.1.1 Preparatory Procedures

[1] **HPT** — Perform detailed radiation and contamination surveys of the overpack and trailer for loose-surface contamination and direct-reading radiation levels (including neutron radiation for irradiated-fuel shipments), acceptable levels are identified in precaution/limitation 4.1. Document survey completion results in FRM-358 and complete the incoming truck survey map.

[2] Examine the following items and document results in FRM-358:

- Trailer and overpack stand for obvious damage
- Overpack for general condition and obvious damage
- Tie-downs for general condition and correct installation.

[3] Open the cask lowboy trailer clean-equipment box. Inventory and perform contamination surveys, as needed; stage the tools for removal of the cask from the trailer. Use FRM-357 to record the items stored in the clean-equipment box.

[4] **Materials Handling-Services/OPS** — Open the truck-lock south roll-up door and move the trailer containing the GE-2000 cask into the truck lock.

CAUTION

The tie-downs must be loosened prior to unhooking the tractor from the trailer to prevent torsion loads on the trailer.

[5] **Materials Handling-Services** — Lower the trailer jack stands and chock the trailer wheels.

[6] If the trailer will remain in the truck lock, with the tractor still connected to trailer, place the 6 × 6-in. timber blocks under the front end of the low-boy trailer between the bottom of the trailer and the truck-lock floor.

[7] **Materials Handling-Services/OPS** — If the trailer will remain in the truck lock, separate the tractor from the trailer and exit the truck lock (leaving the trailer in the truck lock).

[8] Close the truck-lock roll-up door.

SAMPLE

7.1.2 Unloading GE-2000 Cask from Trailer

[1] If the cask contains a payload, examine the tamper-indicating-device (TID) for tampering and record the identification number(s) in FRM-358.

[2] If not already completed, using the turnbuckle ratchet wrench, loosen and separate the top four turnbuckles from the overpack. Leave the turnbuckles attached to the trailer. (The cable ends will remain attached to the overpack cover.)

[3] Using the turnbuckle ratchet wrench, loosen the tension on the tie-downs attached between the overpack base and the trailer, leaving the tie-downs attached between the overpack base and the trailer.

[4] Prepare the overpack stand for receiving the top overpack section for storage and strap it down on the rear of the trailer.

WARNING

If radiation levels are excessive (ref. the RWP), following breaking of the torque, an impact wrench should be used to complete bolt removal to protect personnel from radiation exposure.

[5] Using the 5/8-in. hex-head drive (and as needed a 1/2-in.-drive breaker bar), break the torque and remove the 15 overpack bolts, carefully place the bolts in the clean-equipment box for later reinstallation.

NOTE To ensure the crane hook remains centered on the spreader-bar load pin, spacers or centering rings may be used as necessary.

[6] **Material Handling-Services/OPS** — Install the GE-2000 spreader bar on the high-bay crane, then install the rigging for the overpack cover (ref. Fig. 4).

WARNING

To prevent the overpack top section from shifting and/or binding, the ball detent must be verified to be aligned vertically and as close to the lift plate as possible, prior to lifting the overpack top section.

[7] **Material Handling-Services/OPS** — Lift the overpack cover and transfer it to the overpack storage stand on the trailer (ref. Fig. 4).

[8] Secure the overpack cover on the storage stand by attaching the long turnbuckles between the existing cables on the overpack cover and the swivel eyes on the stand. Do not torque the tie-downs.

SAMPLE

[9] Record the date the cask was received and the cask serial number in FRM-358.

[10] **HPT/OPS** — Perform a contamination survey of the 16 auxiliary-ear bolts and if installed, remove the white tape over the bolt holes and then survey the bolt holes on the cask.

[11] Inspect, clean, and lubricate the 16 auxiliary-ear bolts with Fel-Pro N-5000 Nickel Graphite and clean the bolt holes on the cask.

[12] Using the ratchet wrench, 1-5/8-in. socket with the 7-in. extension, and 1-in. to 3/4-in. drive adapter, install the four auxiliary ears on the cask (four bolts per ear).

[13] Torque each cask auxiliary-ear bolt (using a crisscross pattern) to 600 ft-lb in 200 ft-lb increments, record torque-wrench serial number and document torque completion in FRM-358.

[14] **Materials Handling-Services/OPS** — Install the rigging for lifting the GE-2000 cask (spreader bar on high-bay-crane hook with four 11-ft-long (minimum) slings attached using shackles to the cask) (ref. Fig. 5, Rigging Diagram for GE-2000 Cask). Adjust the spacers as needed on the spreader bar to center the crane hook.

[15] Verify the stainless-steel plate is installed in the bottom of cask-cart adapter.

[16] Clear all unnecessary personnel from the area of the truck-lock hatch.

[17] If not previously opened, open the truck-lock hatch per HFEF-OI-2131.

WARNING

To prevent possible injury to personnel, at no time shall a person place any part of their body under a suspended load. To obtain contamination swipes under a suspended load, a reach stick must be used. If decontamination is necessary, the load must be placed in a safe configuration where no hazard to personnel exists.

[18] **Materials Handling-Services/OPS** — Using the high-bay crane, lift the cask just above the overpack base and perform radiation and contamination surveys, as directed by the HPT. Document completion of the surveys in FRM-358.

[19] **Crew Supervisor** — Review FRM-358 to ensure that it is complete. Maintain the form with the other GE-2000 transport-package documents until the package is ready for shipment or as directed by the systems engineer.

[20] Transfer the cask over the cask cart.

[21] **Materials Handling-Services/OPS** — Slowly lower the cask down towards the cask-cart adapter, stop lowering the cask when it is just a few inches above the bottom of the cask-cart adapter plate.

[22] Rotate the cask, so that the auxiliary ears are properly oriented (ref. Fig. 5).

[23] If needed, place the three cask polyurethane stabilizing blocks at approximately 120E apart between the cask and the top edge of the cart adapter.

[24] Raise the cask cart up until the cask is resting in the cask-cart adapter; then remove and store the rigging from the cask and crane.

[25] **Materials Handling/OPS** — As determined by the HPT, either place a tarp over the open base (for outside storage) or return the top overpack section to the base. A minimum of six overpack bolts must be installed and hand tightened to secure the overpack top section to the base.

[26] If the overpack top section is returned to the base, a minimum of six bolts must be installed and hand tightened (while the overpack top section is still supported by the crane) to properly support the overpack top section.

[27] If needed, remove the trailer from the truck lock and place in a storage location.

7.1.3 Venting GE-2000 Cask and Replacing Cask Lid

[1] **HPT** — Temporarily cover the cask lid and top area with PVC sheeting leaving access to the cask-lid vent port.

[2] Notify the FAS of the intent to open the exhaust valve on the elephant trunk.

[3] Position the elephant trunk directly next to the cask-lid vent-port cover; then open the elephant-trunk exhaust valve to the middle position.

[4] Don PPE and respiratory protection, as directed by the HPT and specified on the RWP.

[5] Using a 3/8-in. hex-head drive, remove the cask-lid vent-port cover.

[6] Using a 3/8-in. hex-head drive, slowly loosen the cask-lid vent-port plug and allow the cask to vent to the elephant trunk.

[7] When the cask has completed venting, complete removal of the cask-lid vent-port plug.

[8] **HPT** — Survey the cask-lid vent-port plug and top of cask, decontaminate as necessary.

[9] If the HPT determines that the elephant trunk is no longer necessary, the elephant trunk may be removed.

[10] Place the vent-port plug, plug cover, and O-ring in a labeled bag for later reinstallation following bag out from the main cell.

[11] Carefully remove all of the contamination-control materials from the top of the cask lid; ensure no contamination-control materials remain on the cask.

[12] Using a ratchet wrench, 7/8-in. hex-head drive, and 1- to 3/4-in. adapter, remove all 15 cask-lid bolts, place the bolts in a labeled bag for later reinstallation.

[13] Verify the shutter shield door is properly secured in the closed position and the chain restraint is routed through the shutter-shield-door handwheel and attached to the chain restraint tab.

[14] Install the shutter-door bagging sleeve with the rod tabs located upward.

CANCELED

[15] Align the cutouts under the shutter with the auxiliary ears, then install the shutter shield on the cask (ref Fig. 6, Rigging Diagram for Shutter Shield), verify that the neoprene gasket is in place, prior to lowering the shutter onto the cask.

[16] Using a level on top of the shutter, install the brace on the east end of the cask-cart adapter under the shutter crossbar and then secure it using a 1-in.-8 UNC bolt.

[17] Remove the chain restraint from the shutter-shield-door hand wheel.

[18] Verify the shutter-shield door operates satisfactorily and then leave the door in the open position.

[19] Remove the GE-2000 cask lid as follows (ref. Fig. 7, Rigging Diagram for GE-2000 Cask Lid):

- [a] Mark the orientation of the cask-lid orientation pins on the shutter to allow for proper alignment of the transfer lid and reinstallation of the cask lid.
- [b] Install the GE-2000-cask lid handler and shackle on the cask lid.
- [c] Cut a hole in the top of a bagging sleeve and then thread the sling through the top of bagging sleeve and attach it to the chain-fall hook; attach the upper half of the chain-fall rigging to the crane.
- [d] Connect the sling to the shackle on the lid handler and take up the slack.
- [e] Place decontamination materials into a bagging sleeve.
- [f] Install the bag over the shutter-shield bagging ring, secure and seal the bag against the ring.
- [g] As directed by the HPT, tape the top end of the clear bagging sleeve around the rigging (as close as possible to the shackle).
- [h] Don PPE and respiratory protection, as directed by the HPT and specified on the Job Specific RWP.

NOTE	When 4-3/4-in. of the cask lid is visible above the top of the shutter bagging ring and the top of the lid is even with the top of the 9-in. tall L-shaped gauge, the shutter-shield door can be closed as the cask lid will have cleared the door.

- [i] As directed by the HPT and while using the chain fall, slowly and carefully raise the cask lid into the bagging sleeve until 4-3/4-in. of the cask lid is showing above the shutter-shield bagging ring and the lid is even with the 9-in. tall L-shaped gauge (maintains a minimal gap between the cask lid and shutter shielding). Maintain the cask-lid level as it is being raised through the shutter shield.
- [j] Close the shutter shield to the full-closed position; using the chain restraint, secure the shutter shield door.

SAMPLE

[k] Continue to raise the cask lid into the bagging sleeve. Raise it sufficiently high to allow heat sealing or taping the bagging sleeve below the lid.

[l] Heat seal or tape the bag between the shutter shield and cask lid.

NOTE	The cask lid (if uncovered) must be set down on plywood or other approved material as listed in Appendix A.

[m] Examine the bottom of the cask lid for condition and then transfer the bagged cask lid to the setdown area on the truck-lock floor.

[20] If the guide basket is to be installed in the cask, perform the following:

[a] Attach a wire rope sling (minimum WLL 100-lb) to the wire bail on the guide basket.

[b] Place the guide basket in a new 114-in. clear polyurethane bagging sleeve.

[c] Cut a hole in the top of the bagging sleeve and thread the wire rope through the top of the bag (to allow attachment of the wire rope to the crane), seal the bagging-sleeve opening with tape.

[d] Attach the new bagging sleeve and basket guide to the crane and position it over the shutter shield.

[e] Install and seal the bottom of the new bagging sleeve on the shutter-shield bagging ring (over the old bagging-sleeve stub).

[f] Remove the old bagging-sleeve stub from the shutter-shield bagging sleeve.

[g] Open the shutter shield door.

[h] Using the crane, lower the basket guide into the cask.

[i] Unhook the wire bail from the guide basket.

[j] Using the crane, raise the rigging away from the shutter shield.

[k] Close the shutter shield door.

[l] Remove the rigging from the crane and decontaminate, as directed by the HPT.

[21] Clean the underside of the transfer lid, then (if needed) assemble the inner and outer transfer lid. Using the preengineered waste-can shield plug T-bar grapple and sling (minimum WLL 1,000 lb) (ref. Dwg. W0066-0383-ED), place the inner transfer lid inside the outer transfer lid.

SAMPLE

[22] Install the transfer-lid assembly on the cask as follows (ref. Fig. 8, Rigging Diagram for Transfer-Lid Assembly)

[a] Install the rigging on the assembled inner- and outer-transfer-lid assembly and crane hook.

[b] As directed by the HPT, place a new bagging sleeve over the transfer-lid assembly; seal the bagging sleeve opening around the rigging with tape.

[c] Place decontamination materials into a bagging-sleeve arm.

[d] Using the crane, raise the transfer-lid assembly and position it over the shutter-shield bagging ring.

[e] Using the level, level the transfer-lid assembly (the transfer lid must be level prior to lowering it onto the cask).

[f] Loosen the banding on the shutter-shield bagging ring sufficiently to allow rolling the rubber band up to provide room to install the new bag and banding.

[g] Install the new bagging sleeve below the old bagging sleeve; then secure the banding over the rubber band, ensuring the banding is secure and will not pull away from the bagging ring.

[h] Remove the old bag stub.

[i] Using the crane, lower the transfer-lid assembly as close as possible to the top of the shutter shield door without touching the shield door.

[j] Remove the chain restraint from the shutter-shield-door handwheel.

[k] With the brace in place under the shutter and as directed by the HPT, slowly open the shutter shield door to allow the HPT obtain a radiation survey.

[l] When directed by the HPT, fully open the shutter shield door (approximately 3 to 4 turns to fully open).

[m] Using the crane and chain fall, lower the transfer-lid assembly onto the cask.

NOTE	The swivel eyes will remain on the transfer-lid assembly until after the shutter shield is removed from the cask.

[n] As directed by the HPT, remove the rigging from the transfer-lid assembly; ensure that the swivel eyes are not sticking up (could prevent the shutter door from closing).

[23] As directed by the HPT, decontaminate and remove bagging sleeve from the shutter-shield bagging ring.

[24] Close the shutter shield door and secure the handwheel with the chain restraint.

[25] Using the crane, remove the shutter shield from the cask (ref. Fig. 6).

SAMPLE

[26] As directed by the HPT, perform a contamination survey and decontaminate the shutter shield.

[27] Using the crane, move the shutter shield to the setdown area on the truck-lock floor; place three wood blocks under the shutter-shield cutouts and rear crossbar to support the shutter shield on the floor (ref. Fig. 6).

[28] Remove the swivel eyes from the transfer-lid assembly.

[29] Using the crane, align the cutouts under the shield ring with the auxiliary ears and then install the cask shield ring on the cask (ref. Fig. 9, Rigging Diagram for GE-2000 Shield Ring).

[30] Remove the rigging from the crane.

[31] Close the truck-lock hatch.

7.1.4 Bagging Cask at Penetration 1M1 and Unloading Shipping Basket

[1] Move the cask-cart with the cask under main-cell penetration 1M1 (ref. HFEF-OI-3130).

[2] Position the cask to allow bagging operations with cell-penetration 1M1 (ref. HFEF-OI-3410, *Cask-Tunnel Transfer Penetrations*).

[3] Prior to starting the bagging operation, raise the cask to the penetration and verify a proper fit up.

CAUTION

Care must be taken to ensure all bagging-sleeve edges are laying flat and well sealed against the penetration-1M1 bagging ring and the cask-shield-ring bagging ring. If the bagging sleeve is not tight, the sleeve may leak air into the main cell or contamination into the cask tunnel.

NOTE When installing the bagging sleeve, the bagging-sleeve may be folded down, as necessary, to aid in a proper fit on the 19-in. cask bagging ring and penetration bagging ring.

[4] Install the bagging sleeve with associated dowels and hoops (ref. Dwg. W0147-0619-EE) over the cask-shield bagging ring and to the penetration-1M1 bagging ring (ref. HFEF-OI-3410).

[5] Remove the bagging-sleeve stub(s) from the cask-shield bagging ring and seal into one of the bagging-sleeve arms.

[6] Raise the cask cart up to penetration 1M1, while simultaneously removing pressure from the bagging sleeve (ref. HFEF-OI-3410).

[7] Purge the bagging sleeve three times (ref. HFEF-OI-3410).

SAMPLE

[8] If required by the systems engineer, wrap the interface between the cask and shield ring with PVC and Scotch 3M tape (ref. Appendix A). Seal the bagging-sleeve (as necessary) to prevent air in-leakage to the main cell.

[9] Verify that the cask is properly sealed to main-cell penetration 1M1.

NOTE All accountable material transfers are to be performed in accordance with HFEF-OI-1302, "Mass Tracking System."

[10] Verify that both floor-plug storage containers are available in zone 1M.

[11] Verify that the screw grapple (needed for removal of the inner transfer lid) and the latch grapple (needed for removal of the shipping basket) are available in zone 1M.

CAUTION

If the funnel is installed in the 1M1 penetration (outermost floor plug), it can be removed as it is attached using magnets and is not permanently attached. When moving the floor plug and if the funnel is installed it must be supported to keep it in the floor plug. The funnel can be removed once the floor plug is transferred away from the open penetration. Care must be taken to avoid dropping the funnel or other items down through the floor penetration.

[12] Remove all penetration-1M1 floor plugs (ref. HFEF-OI-3410) and place them on blotter paper. If the funnel is installed in the outermost plug, then after moving it away from the penetration opening, remove the funnel using a master/slave (M/S) manipulator. Set the floor plug down out of the way.

[13] Using a mirror and light, view the open floor penetration to ensure that a clear path is available for removing the inner transfer lid.

[14] Install a standard 83-in. waste-can screw grapple (ref. Dwg. W0147-0253-DD) on the electromechanical manipulator (EM).

[15] Using the EM, perform the following:

[a] Lower the screw grapple into the penetration and attach it to the inner transfer lid.

[b] Remove the inner transfer lid from the cask.

[c] Lift the inner shield plug into the cell and place it on the prepared square of plastic or blotter paper.

[16] Remove the screw grapple from the EM and store it.

[17] Install either a latch grapple (ref. Dwg. W0147-0064-EE) or a screw grapple on the in-cell crane or EM.

SAMPLE

[18] Using the in-cell crane or EM, lower the grapple into the penetration and attach to the shipping basket.

[19] Using the in-cell crane or EM, lift the shipping basket into the main cell and transfer it to the unloading station.

[20] Reattach the screw grapple onto the EM and inner transfer lid.

[21] Using the EM, lower the transfer lid back into the penetration and replace the lid in the outer transfer lid on the cask.

[22] Raise the EM back into the cell.

[23] Remove the screw grapple from the EM and store it.

[24] Replace all penetration-1M1 floor plugs in the penetration (ref. HFEF OI-3410).

[25] Bag-out the cask from penetration 1M1 (ref. HFEF-OI-3410).

[26] Return the cask to the truck-lock hatch per HFEF-OI-3130.

7.2 Cask Shipment

7.2.1 Replacing Cask Lid

[1] As directed by the HPT, perform a contamination survey and decontaminate the cask lid (as needed), to enable removing the bagging sleeve from the cask lid in preparation for reinstallation.

[2] Clear all unnecessary personnel from the area of the truck-lock hatch.

[3] Open the truck-lock hatch per HFEF-OI-2131.

[4] Notify the FAS of the intent to open the elephant-trunk exhaust valve.

[5] Position the elephant trunk opening directly next to the top of cask; open the elephant-trunk exhaust valve to the middle position.

[6] Install a new bagging sleeve, decontaminate the shield ring, and remove stub as directed by the HPT.

[7] As directed by the HPT, complete decontaminating the shield ring and top of cask and apply tape over the inner-transfer-lid screw hole. Shut down and store the elephant trunk.

[8] Using the crane, remove the shield ring and place it in the storage location in the truck lock.

[9] IF shutter shield is not required,
THEN go to Step 7.2.1[15].

[10] Install a contamination bag (with rod tabs) over the door end of the shutter shield (if necessary).

[11] Verify the shutter shield door is properly secured in the closed position and the chain restraint is routed through the shutter-shield-door handwheel and attached to the chain restraint tab.

SAMPLE

[12] If removed, reinstall the three 3/4-in.-10 UNC swivel eyes on the outer transfer lid (ref. Fig. 8) and torque to the value specified on the tag.

[13] Reinstall the rigging on the shutter shield and crane.

[14] Using the crane, reinstall the shutter shield on the cask (ref. Fig. 6). Verify that the neoprene gasket on the bottom of the shutter shield is in place prior to lowering the shutter onto the cask.

[15] Remove the chain restraint from the shutter-shield-door handwheel, verify proper shutter shield door operation, and then leave the door in the open position.

[16] Install a bagging sleeve between the shutter-shield or top of the cask (as applicable) and the crane hook by performing the following:

- [a] Place decontamination materials into a bagging sleeve.
- [b] Secure the bagging sleeve to the shutter-shield or cask (as applicable) and ensure the bagging sleeve is properly secured.
- [c] Cut a hole in the top of the bagging sleeve to allow the rigging to pass through.
- [d] Install the rigging, through the hole in the bagging sleeve top, between the crane and the transfer-lid assembly (ref. Fig. 8).
- [e] Position the bagging sleeve near the shutter-shield or cask (as applicable) and tape the bagging sleeve to the rigging.

NOTE	Following removal of the transfer-lid assembly, the lid seal on the cask should be verified to be intact.

[17] Using the crane, slowly raise the transfer-lid assembly into the clear polyurethane bag sufficiently to allow heat sealing of the bagging sleeve. Verify that the lid seal on the cask is intact.

[18] If applicable, close the shutter-shield door, secure the hand wheel with the chain restraint.

[19] Heat seal or tape the bagging sleeve between the shutter shield or cask and transfer-lid assembly.

[20] Using the crane, place the bagged transfer-lid assembly on the setdown area on the truck-lock floor.

NOTE	To properly decontaminate the transfer-lid assembly the inner- and outer lids will need to be separated.

[21] As directed by the HPT, perform contamination surveys and decontaminate the transfer-lid assembly (as needed) to remove bagging sleeve; then remove the bagging sleeve.

SAMPLE

[22] Install a new bagging sleeve on the shutter-shield or cask as follows:

- [a] Obtain a bagging sleeve.
- [b] Insert a sling (minimum WLL 100 lb) through a hole cut in the top of the bagging sleeve to allow rigging installation on the crane.
- [c] Tape the bagging-sleeve to the sling.
- [d] Install the new bagging sleeve over the old bagging stub.
- [e] Remove the old bagging-sleeve stub.
- [f] Attach the sling to the basket guide and the crane.

[23] Notify the FAS of the intent to open the elephant trunk exhaust valve.

[24] Position the elephant trunk opening directly next to the cask lid; open the elephant-trunk exhaust valve to the middle position.

[25] Using the crane, carefully raise the basket guide from the cask into the bagging sleeve and then heat seal or tape the bagging sleeve.

[26] Using the crane, place the bagged basket guide on the setdown area on the truck-lock floor.

[27] If required by the HPT, install a new half-length or 114-in.-long bagging sleeve over the shutter shield or cask (as applicable).

[28] **HPT** — Perform an initial contamination survey of reachable portions of the cask cavity.

[29] As directed by the HPT, decontaminate reachable portions of the cask cavity and/or shutter shield. (Acceptance criteria: <2,200 dpm/cm^2 beta-gamma and <220 dpm/cm^2 alpha.)

[30] When contamination levels of reachable portions of the cask cavity and/or shutter shield have been verified to be <2,200 dpm/cm^2 beta-gamma and <220 dpm/cm^2 alpha, then continue with Step 7.2.1[31].

[31] Attach a Tygon tube to the elephant trunk, place the other end of the Tygon tube near the bottom of the cask cavity to remove any gases and particulate from the cask cavity.

[32] With the Tygon hose in place exhausting the cask cavity, carefully remove the bagging sleeve and then decontaminate reachable portions of the shutter shield to <2,200 dpm/cm^2 beta-gamma and <220 dpm/cm^2 alpha.

[33] Remove the Tygon tube from the cask cavity and elephant trunk.

[34] Remove the elephant trunk.

[35] If used, close the shutter shield and secure the handwheel with the chain restraint.

[36] If used, lift and remove the shutter shield from the cask.

[37] Replace the elephant trunk on the top of the cask.

SAMPLE

[38] IF the GE-2000-cask liner is to be removed and/or decontaminated, THEN perform the following:

[a] **HPT** — Perform a contamination survey of the top of the liner and liner cavity. (Acceptance criteria: <2,200 dpm/cm^2 beta-gamma, <220 dpm/cm^2 alpha.)

[b] If decontamination of the top of the liner and/or liner cavity is necessary, decontaminate the top of the liner and/or liner cavity, as directed by the HPT.

WARNING

To prevent injury to fingers or hand, do not place fingers or hands under the suspended liner. A reach stick must be used to decontaminate or take swipes on the bottom of the liner.

[c] Using the crane, slowly raise the cask liner from the cask, wiping down the sides and bottom of the liner to <2,200 dpm/cm^2 beta-gamma and <220 dpm/cm^2 alpha (ref. Fig. 10, Rigging Diagram for GE-2000-Cask Liner).

[d] When the cask liner is clear of the cask, place the liner on plywood or plastic that has been positioned on the truck-lock floor.

[39] **HPT** — Perform contamination surveys of the cask cavity and top of the cask. If necessary, decontaminate the cask cavity and top of the cask. (Acceptance criteria: <2,200 dpm/cm^2 beta-gamma and <220 dpm/cm^2 alpha.) Document contamination survey results in FRM-359 and provide the systems engineer with a copy of the survey map.

[40] **HPT** — If the cask interior was opened to the hot-cell, then obtain cask-lid and -cavity contamination swipes for radionuclide and tritium analysis and immediately transfer the smears to the Analytical Laboratory (AL) for radionuclide and tritium analysis. Document completion in FRM-359.

[41] Shut the elephant-trunk exhaust valve and remove the elephant trunk.

[42] Inform the FAS that the elephant trunk is no longer being used.

[43] Examine the cask-lid seal and guide pins for cleanliness and satisfactory condition and clean if necessary. Verify that there is no debris remaining on the seal. Document completion in FRM-359.

[44] Verify that no bagging materials or other debris remains in the cask cavity. Document completion in FRM-359.

CANCELLED

NOTE	To determine if the GE-2000 cask interior has been decontaminated sufficiently for over-the-road shipment. The sample results of the radionuclide swipe analysis must be compared with the requirements of with Code of Federal Regulations Title 49, Section 173, Subpart 428, Empty Class 7 Radioactive Materials Packaging requirements.

[45] **Systems Engineer** — Verify that the radionuclide swipes taken in Step 7.2.1[40] meet the requirements for empty cask over-the-road transport. Document completion in FRM-359.

[46] If removed, return the cask liner to the cask cavity (ref. Fig. 10).

[47] Using the crane, replace the previously decontaminated cask lid on the cask being careful to properly align the cask lid.

NOTE	Subsection 7.2.2 is only performed if required.

7.2.2 Pumping Argon from Cask

[1] Apply Teflon tape to the threaded pipe flange that screws into the cask-lid vent port; hand tighten the pipe flange into the vent port.

[2] Install the GE three-way leak test/evacuation adapter (Cross fitting) red end towards the pipe flange, by securely clamping the butterfly nut on the KF flange (ref. Fig. 11, Varian SD-201 Pump-Down Setup).

[3] Connect the Varian SD-201 vacuum pump and hose with matching KF flange to the top (green end) of the Cross-fitting flange.

[4] Connect the Varian-pump outlet hose to the cell-exhaust-system elephant truck.

[5] Connect the inlet and outlet hose connections to the Varian pump.

[6] Inform the FAS that the elephant trunk will be used.

[7] Place the elephant-trunk exhaust valve in the mid position.

WARNING

The Varian pump exhaust hose must be verified to be connected to the elephant trunk prior to operating the Varian-pump power switch to prevent contaminating the cask cart and personnel in the area.

[8] Verify the Varian-pump power-supply switch is turned off.

[9] Plug the Varian-pump power cord into a standard 110-V receptacle.

[10] Verify the outlet to the vacuum pump is exhausting to the elephant trunk.

[11] Verify that all hand-operated valves (both green and blue) on the Cross fittings are shut.

[12] Place the power switch on the Varian pump in the ON position.

SAMPLE

[13] Open the green/purple valve (attached to the cask) and then observe the vacuum-gauge reading.

[14] When the gauge indicates <5 torr, allow the Varian pump to run for 1 min longer.

[15] Place the Varian-pump power-supply switch in the OFF position.

[16] Shut the green valve on the Cross fitting (attached to the cask).

[17] With an HPT present, loosen and remove the top (green) butterfly clamp.

[18] Open the green/purple valve on the Cross fitting and allow the cask to return from a negative pressure to atmospheric pressure, by allowing air to enter the cask.

[19] With an HPT present, remove the Cross fitting and pipe flange.

[20] As directed by the HPT, perform a contamination survey and decontaminate the Cross fitting and pipe flange, bag the items if necessary.

[21] Remove the inlet and exhaust hoses from the Varian pump.

[22] Shut the elephant-trunk exhaust valve.

[23] Remove the exhaust hose from the elephant trunk.

[24] As directed by the HPT, perform a contamination survey and decontaminate the inlet and exhaust hoses, bag them if necessary.

7.2.3 Final Cask-Lid Installation

[1] Apply Teflon tape to the cask-lid vent-port plug.

[2] Using a ratchet wrench and a 3/8-in. hex-drive Allen wrench, install the cask-lid vent-port plug and tighten until snug.

[3] Examine the cask-lid vent-port cover for damage and remove, examine, clean, and reinstall the cover O-ring. Document completion in FRM-359.

[4] Using a ratchet wrench and 3/8-in. hex-drive Allen wrench, reinstall the cask-lid vent-port cover with O-ring; tighten until snug. Document completion in FRM-359.

[5] Using a ratchet wrench and 3/8-in. hex-drive Allen wrench, remove the leak-test-port cover (located on the top side of the cask) and verify that the O-ring is present and in good condition. Document completion in FRM-359.

[6] Using a ratchet wrench and 3/8-in. hex-drive Allen wrench, reinstall the leak-test port cover. Document completion in FRM-359.

[7] Using Fel-Pro-N-5000 graphite or equivalent bolt compound, lubricate the 15 cask-lid bolts and then reinstall the bolts.

SAMPLE

NOTE	Using the torque multiplier requires dividing the 690 ft-lb torque value by the multiplier value (mv) or 690/mv = final torque. Each 230 ft-lb increment is determined by dividing the final torque value by the following: first torque by 3, second torque by 2, and the last torque by 1.

[8] Using a 0 to 250 ft-lb torque wrench with the gear-head torque multiplier and reaction bar, torque the cask-lid bolts using a crisscross pattern in 230 ft-lb increments to a final torque value of 690 ft-lb (ref. Fig. 12, Cask-Lid Bolt Torquing Sequence). Record the torque-wrench serial number and torque completion in FRM-359.

[9] As directed by the HPT, decontaminate (as necessary) the cask exterior to <200 dpm alpha/ft^2 and <100 cpm beta-gamma.

[10] **HPT** — When the cask exterior has been decontaminated to <200 dpm/ft^2 alpha and <100 cpm beta-gamma, document decontamination completion in FRM-359 and provide the systems engineer with a copy of the survey maps and contamination results.

[11] Apply 3M white scotch tape (No. 483) over the port covers (vent and seal test).

7.2.4 Replacing Cask into Overpack

[1] **Materials Handling Services/OPS** — Using the high-bay-area crane, perform the following:

[a] If necessary, move the cask trailer into the truck lock.

[b] Transfer the cask to the overpack base on the trailer.

[c] Slowly lower the cask just inside the overpack base positioning the auxiliary ears in line with the trailer length.

[2] Remove the drain-port cover and verify that an O-ring is installed and examine for satisfactory condition, replace the drain-port cover and apply 3M white scotch tape (No. 483) over the cover. Document completion in FRM-359.

[3] Remove the four auxiliary ears; properly store the ears in the auxiliary-ear storage box and apply 3M white scotch tape (No. 483) over the bolt holes.

[4] Remove the slings from the spreader bar.

[5] Separate the top overpack-cover turnbuckles from the slings.

SAMPLE

[6] **Materials Handling-Services/OPS** — Using the high-bay-area crane, perform the following:

[a] Position the spreader bar over the overpack cover, and attach the slings and shackles to the overpack (ref. Fig. 4).

[b] Slowly lower the overpack cover over the cask, using care to ensure the locating pins are properly aligned.

[7] Obtain a torque wrench capable of 100 ft-lb for torquing the overpack bolts.

[8] Clean and apply Vibra-Tite compound to the 15 overpack bolts.

[9] With the crane supporting and steadying the overpack cover, install the 15 overpack bolts by hand (no lubrication). Do not force the bolts.

[10] Using a torque wrench, torque the overpack bolts in a circular pattern to 100 ft-lb. Record the torque-wrench serial number and document torque completion in FRM-359.

[11] Remove the crane and spreader bar from the overpack.

[12] Install the eight tie-down wire ropes, turnbuckles, and shackles on the overpack as follows (ref. Fig. 13, Overpack-Cover Tie-Down Diagram):

[a] Attach one end of an 18-in. ratchet turnbuckle to the overpack cover.

[b] Attach the opposite end of the ratchet turnbuckle to the 60-in.-long wire-rope sling.

[c] Using a shackle, attach the 60-in.-long wire-rope sling to the outside trailer tie-down bracket.

[d] Repeat Steps 7.2.4[12][a] through 7.2.4[12][c] until the remaining three overpack-cover tie-downs have been installed.

NOTE	The final tie-down torque must not be applied to the tie-downs until the trailer has been attached to the transport tractor.

[13] Tighten the overpack base and cover ratchet turnbuckles with the turnbuckle ratchet wrench until all slack has been removed from the wire ropes.

[14] **Materials Handling-Services/OPS** — Perform the following:

[a] Using the crane, as needed, remove the overpack storage stand from the cask trailer and transfer to the 7A equipment box trailer, and then strap it down to trailer.

[b] Connect the tractor to the trailer, raise the trailer jack stands, and remove the chocks.

[c] Remove the 6 × 6-in. timber from under the front end of the trailer.

SAMPLE

NOTE	Hand-held bars should be placed through the ends of the turnbuckles to keep the wire-rope slings from twisting from the torque being applied to the turnbuckles.

[d] Tighten the overpack-base-cover ratchet turnbuckles with the turnbuckle ratchet wrench until all slack has been removed from the wire rope.

[e] Using the turnbuckle ratchet wrench, socket adapter, and a torque wrench (capable of 165 ft-lb), tighten the overpack-cover turnbuckles using a crisscross pattern in 40 ± 5 ft-lb increments to a final torque value of 160 to 165 ft-lb. Record the torque-wrench serial number and document torque completion in FRM-359.

[15] Tighten the locknuts on the overpack-base and -cover ratchet turnbuckles and secure the shackle pins with wire or tie wraps.

[16] Move the truck approximately 10 ft and using the torque wrench identified in Step 7.2.4[14][e], recheck that the torque on the overpack cover turnbuckle tie-downs has not changed (160 to 165 ft-lb). If necessary, loosen the lock nuts and retorque the turnbuckle tie-downs to obtain the proper torque value.

[17] Document completion of overpack tiedown installation in FRM-359.

[18] Install a TID through the hole in the flange between the top and bottom impact limiter. Record completion in FRM-359.

[19] Strap down miscellaneous items (such as ladders, clean box, blocks, etc.) on the trailer.

[20] Set (spin) the combination lock to lock the white clean box prior to shipment.

7.2.5 Final Shipping Preparations

[1] **HPT** — Perform a final radiation survey of the cask and trailer; record survey results in FRM-359 and complete an outgoing truck and trailer survey map provide the systems engineer with a copy of the survey maps.

[2] **HPT** — Survey the cask (ref. precaution/limitation 4.1). Obtain the transport index (TI) reading at 1 meter (3.3 ft) from the surface of the pay load (if loaded), and record the location and maximum TI reading; document completion in FRM-359.

[3] **CWI Transportation Group** — Perform the following:

[a] Record the criticality safety index (CSI) (fissile shipments only) and TI reading in FRM-359 and affix the label(s) on the cask, as appropriate.

SAMPLE

NOTE	Labels, tape or markings must not be placed directly on the cask body or overpack surfaces. Labels must only be applied to the Aapproved tape-on area@ over 3M white scotch tape (No. 483). Appendix A must be referred to for an approved list of materials, tape, etc. for use on the GE-2000 cask package.

[b] Remove all old shipping labels and install new shipping labels on the GE-2000 cask package.

[c] Complete a manifest using the radiation survey information recorded in Step 7.2.5[1].

[d] Notify the TriState driver that the trailer must be blocked using 6 × 6-in. blocks and the tie-downs loosened when hooking up or unhooking from the cask double lowboy trailer.

[4] **Crew Supervisor** — Verify all steps of forms FRM-358 and FRM-359 have been completed and signed off. Document completion in FRM-359.

[5] **Materials Handling-Services/OPS** — Open the roll-up doors and remove the tractor and trailer from the truck lock.

8. PERFORMANCE SECTION — LOADING TYPE-7A EQUIPMENT BOX

[1] **Materials Handling-Services/OPS** — Move the trailer for the 7A equipment box into the truck lock.

[2] Inventory the GE-VNC equipment box items in preparation for repackaging into the individual equipment boxes.

[3] **HPT** — Perform a contamination survey of the GE-VNC equipment and decontaminate them, if necessary in preparation for repackaging the equipment. Verify that the contamination survey results are within acceptable limits (precaution/limitation 4.1); document completion in FRM-357.

SAMPLE

NOTE	All boxes and components are to be strapped down inside the 7A equipment box as originally packaged to prevent any shifting of the load (ref. FRM-357, Fig. 1). Uni-strut racks are fastened to the inside of the equipment box; they are intended to serve as tie-down strap attachment points.

[4] **Materials Handling-Services/OPS** — Perform the shipment check verification while reloading the GE-VNC equipment and document completion in FRM-357. Initial in FRM-357 as each item is returned to its correct storage-box location (ref. FRM-357, Fig. 1, 7A Equipment Box Storage Locations):

[a] Verify that the spare cask seal security seal on the 7A equipment box is still intact. (The spare cask seal, if provided, normally remains in the 7A equipment box unless it has been required for use.)

[b] Using the crane, move the spreader bar (with shackles attached and turned upward) into the 7A equipment box onto its wooden cradle. Secure the spreader bar with its tie-down straps.

[c] Using the crane, carefully move the standard ear box into the 7A equipment box corner designated for it. Work the standard-ear box into the corner as far as possible; then secure it with tie-down straps.

[d] If present, using the crane, carefully move the drying box (orient the drying-box lid handle to the inside before lowering it into the 7A equipment box). Position the drying box across from the spreader bar against the wall of the 7A equipment box. Secure the drying box with tie-down straps.

[e] Carefully place the rigging accessories drum on its side and then move it into the 7A equipment box between the spreader-bar lifting points and the side of the 7A equipment box. Strap down the rigging accessories drum.

[f] If removed from the 7A equipment box, replace the drum spreader into the 7A equipment box between the spreader bar and the drying box. Secure the drum spreader with tie down straps.

[g] Carefully move the auxiliary-ear box into the corner of the 7A equipment box. Work the auxiliary-ear box into the corner as far as possible. Secure the auxiliary-ear box with tie-down straps.

[h] Place the wrench box into the 7A equipment box between the spreader bar and the drying box. Secure the wrench box with tie-down straps.

[i] Carefully move the leak-detection-equipment box into the 7A equipment box between the spreader box and 7A equipment box wall. Secure the leak detection equipment box with tie-down straps.

SAMPLE

[j] Carefully move the chain-hoist box (latches to the inside) into the 7A equipment box between the spreader bar and the 7A equipment box wall. Secure the chain-hoist box with tie-down straps.

[k] Place the bolt box on top of the chain hoist box. Secure the bolt box with tie-down straps.

[l] Strap down and prepare the equipment box for transport in its storage location on the trailer. Document completion in FRM-357.

[5] **Crew Supervisor** — All items have been accounted for and properly stored in the equipment boxes. Document completion in FRM-357.

9. EMERGENCY PROCEDURES

9.1 Fire Alarm

[1] IF there is a fire in the immediate vicinity,
THEN immediately evacuate the area and go to the assembly area.

[2] IF there is not a fire in the area and time permits,
THEN place the cask/payload in a safe condition and go to the assembly area.

[3] Notify the HFEF Building Emergency Director (BED) of cask/payload status.

9.2 Radiation Alarm

[1] IF an HPT is not present,
THEN evacuate the area and go to the assembly area outside of HFEF.

[2] IF an HPT is present and monitoring
AND there is a radiation problem,
THEN perform the following:

[a] Evacuate the area and go to the assembly area outside of HFEF.

[b] Assemble as directed by the HPT.

[3] IF an HPT is present and monitoring
AND there is not a radiation problem,
THEN perform the following:

[a] Place the cask/payload in a safe condition.

[b] Evacuate the area and go to the assembly area outside of HFEF.

[4] Notify the HFEF BED of cask/payload status.

SAMPLE

9.3 Criticality Alarm

9.3.1 Criticality in HFEF

[1] Stop all operations and evacuate HFEF, bypassing the personnel radiation monitors, and relocate to the Bldg.-713 Conference Room (primary) or Bldg.-710 Conference Room (secondary).

[2] Notify an HPT that personnel monitoring was bypassed while exiting HFEF.

[3] **Potentially-Contaminated Personnel** — Go to the EBR-II Health Physics (HP) Field Office.

[4] Notify the HFEF BED of cask/payload status.

9.3.2 Criticality in Another Facility

[1] Place the cask/payload in a safe condition and go to the in-building assembly area.

9.4 Site Alert

[1] Place the cask/payload in a safe condition and go to the in-building assembly area.

9.5 Site Evacuation

[1] Immediately proceed to the evacuation buses without passing through the personnel contamination monitors.

[2] **Potentially-Contaminated Personnel** — Go to the west side of the gate at the Security Building and notify an HPT to perform a whole-body survey before boarding the bus.

[3] Notify the HFEF BED of cask/payload status.

SAMPLE

(This page intentionally left blank.)

SAMPLE

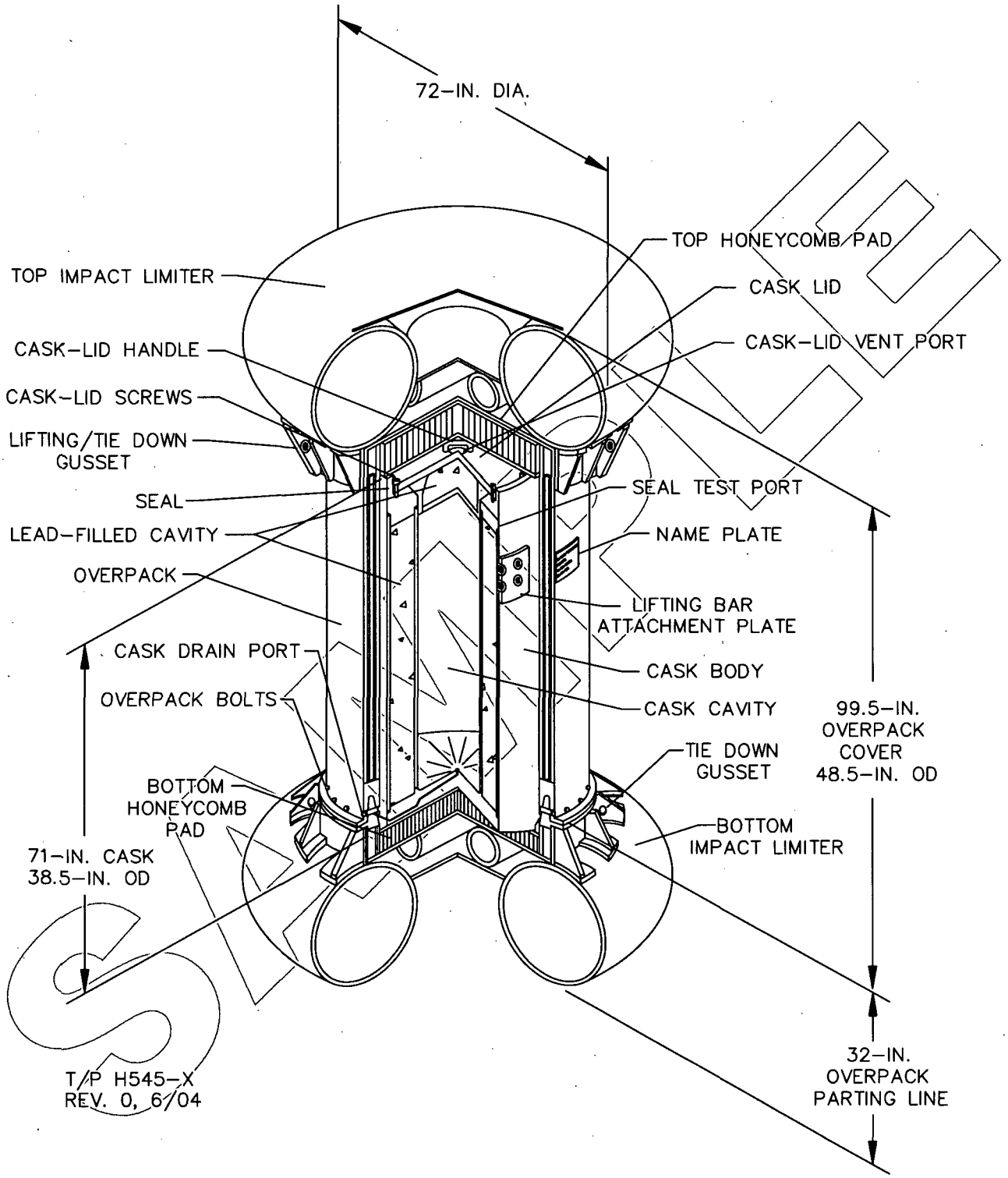

Fig. 1. Model-2000 Transport Package

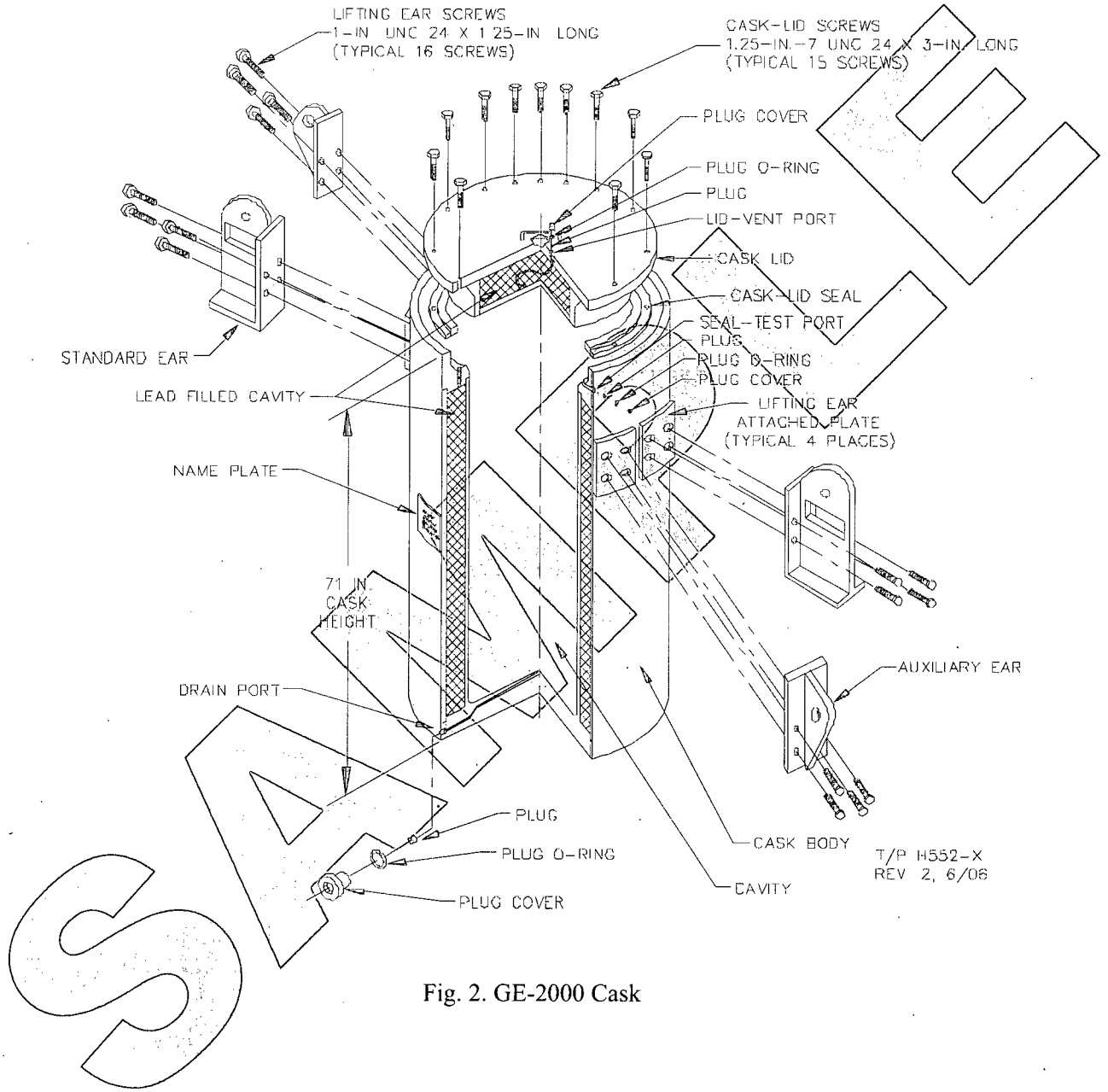

Fig. 2. GE-2000 Cask

SAMPLE

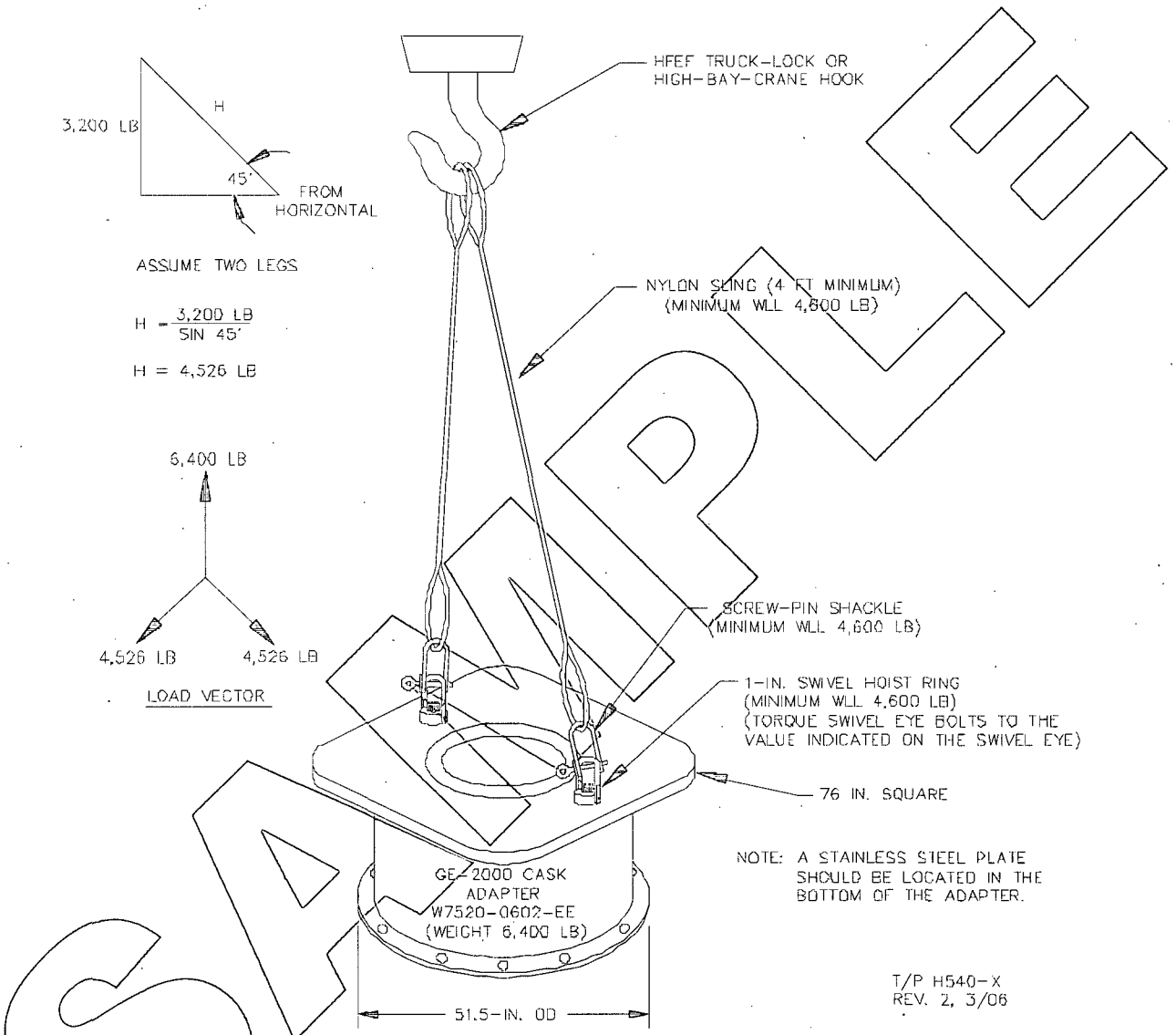

Fig. 3. Rigging Diagram for GE-2000 Cask-Cart Adapter

SAMPLE

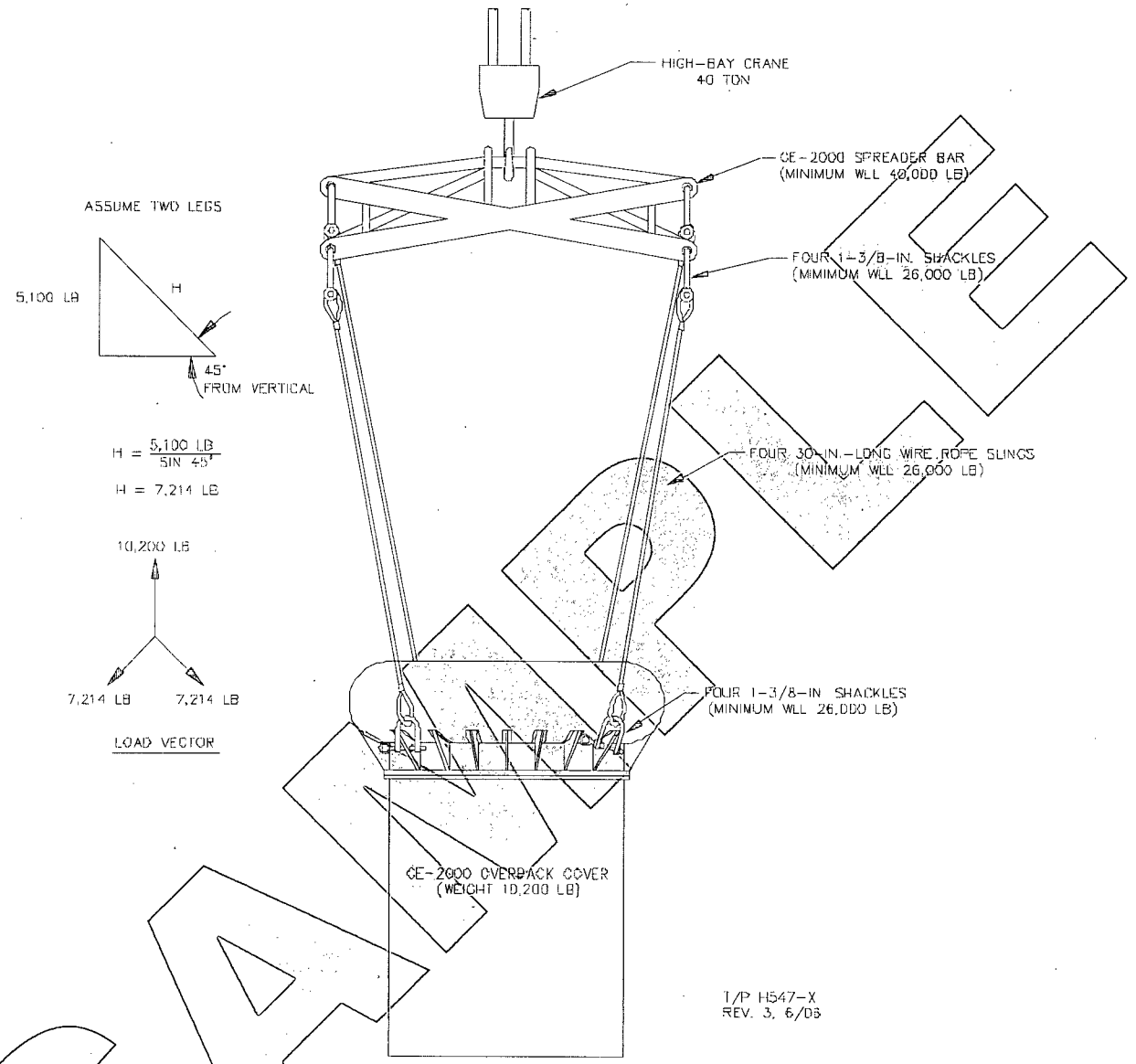

Fig. 4. Rigging Diagram for the GE-2000-Cask Overpack Cover

SAMPLE

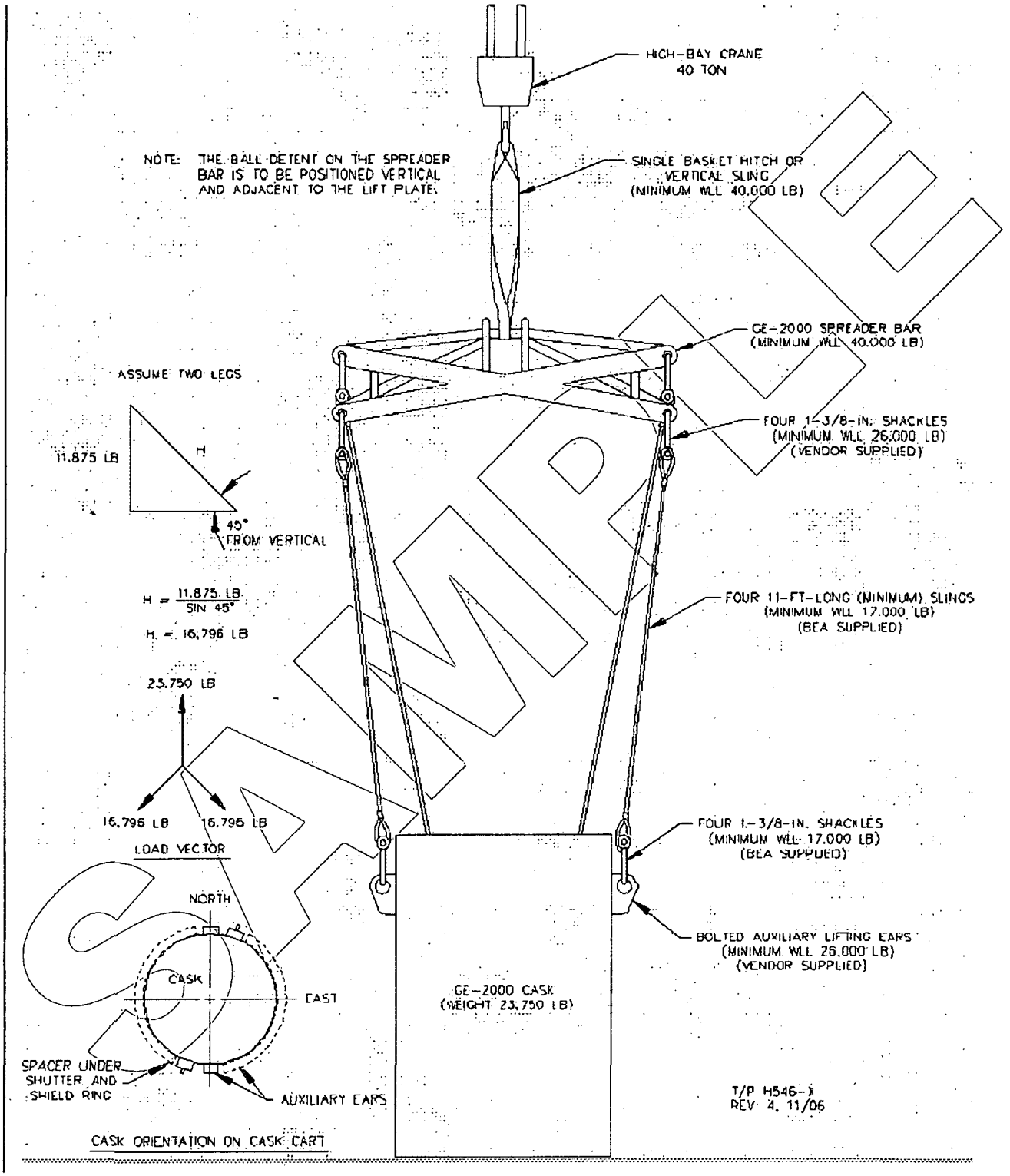

Fig. 5. Rigging Diagram for GE-2000 Cask

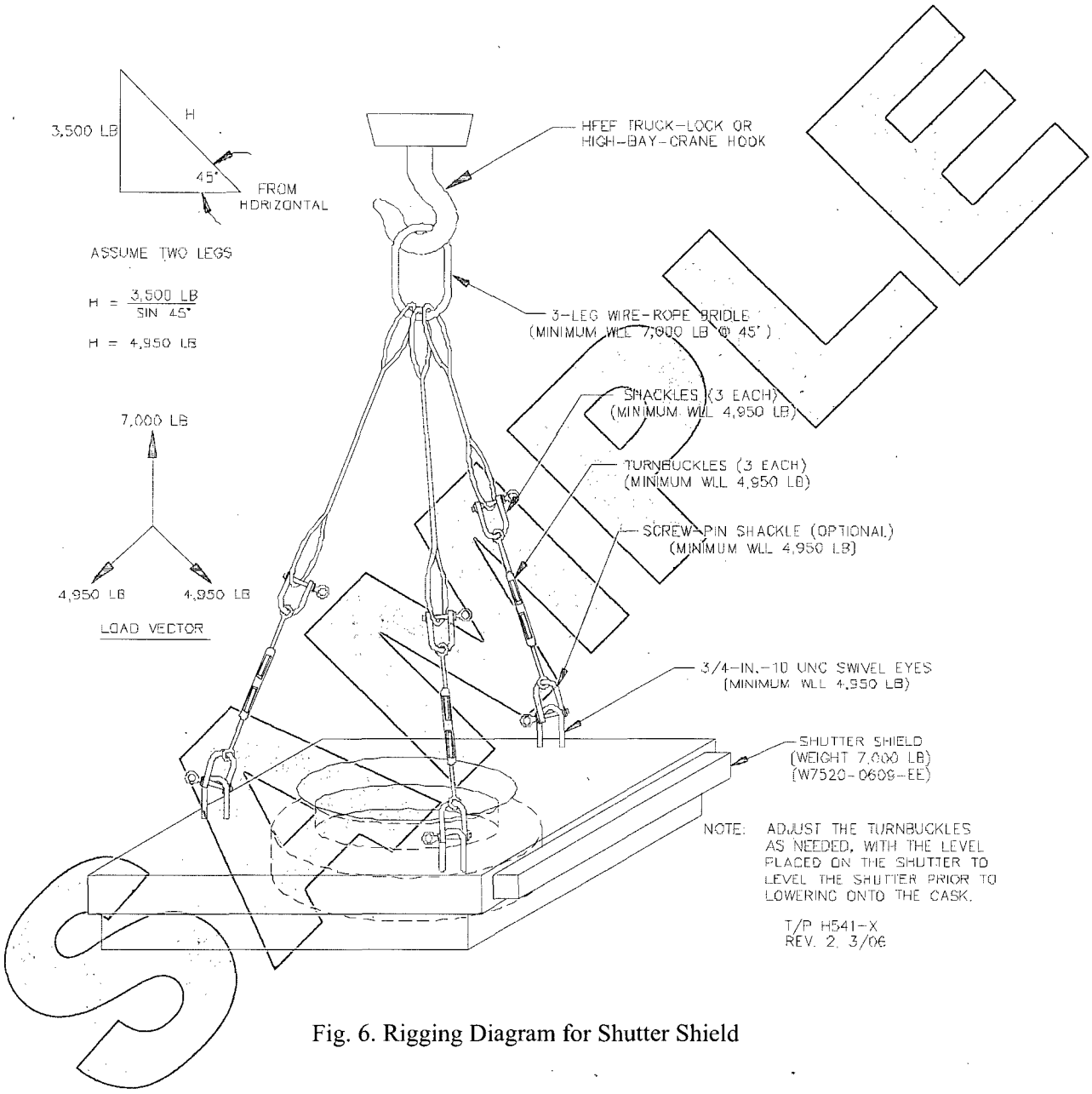

Fig. 6. Rigging Diagram for Shutter Shield

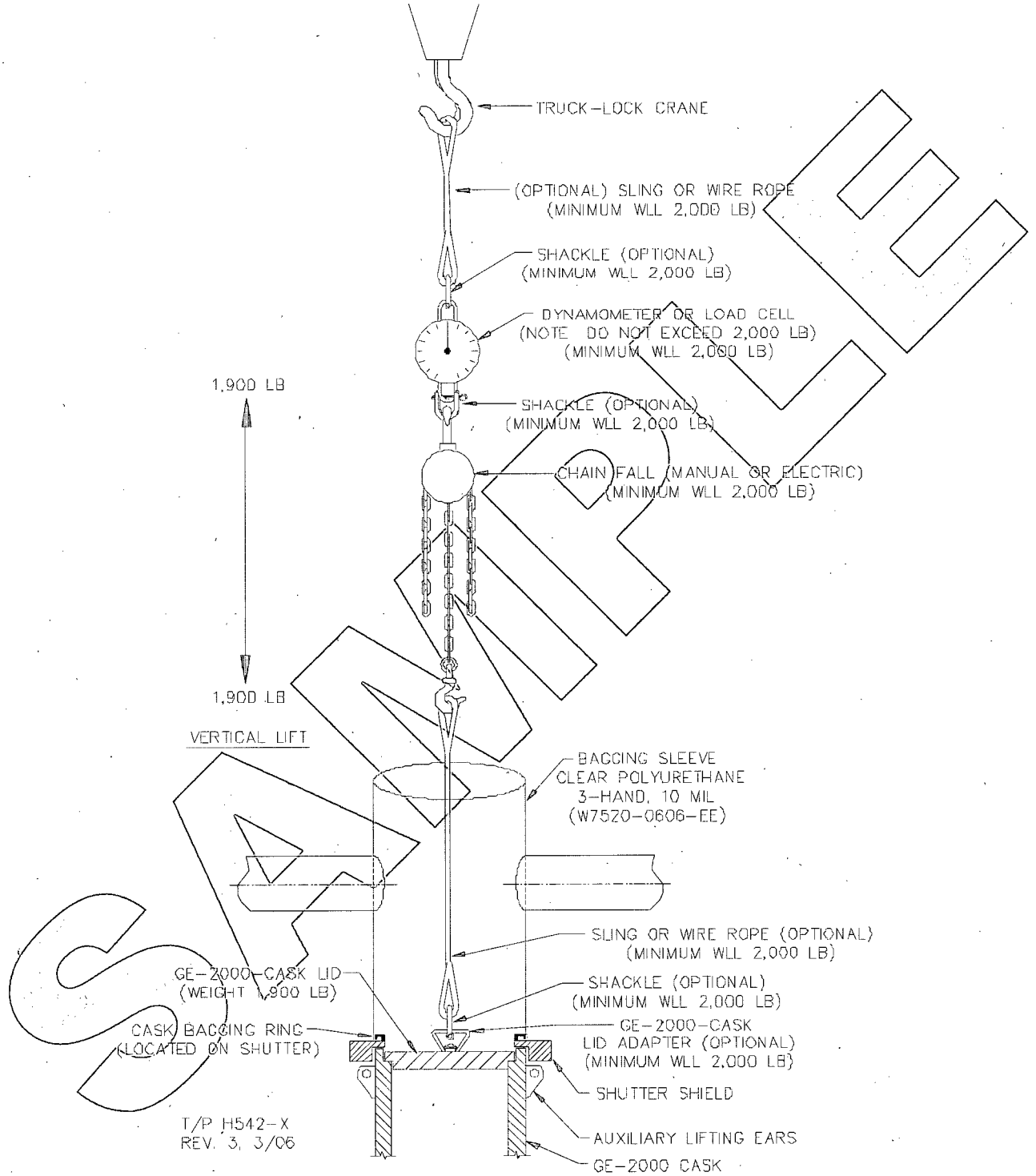

Fig. 7. Rigging Diagram for GE-2000 Cask Lid

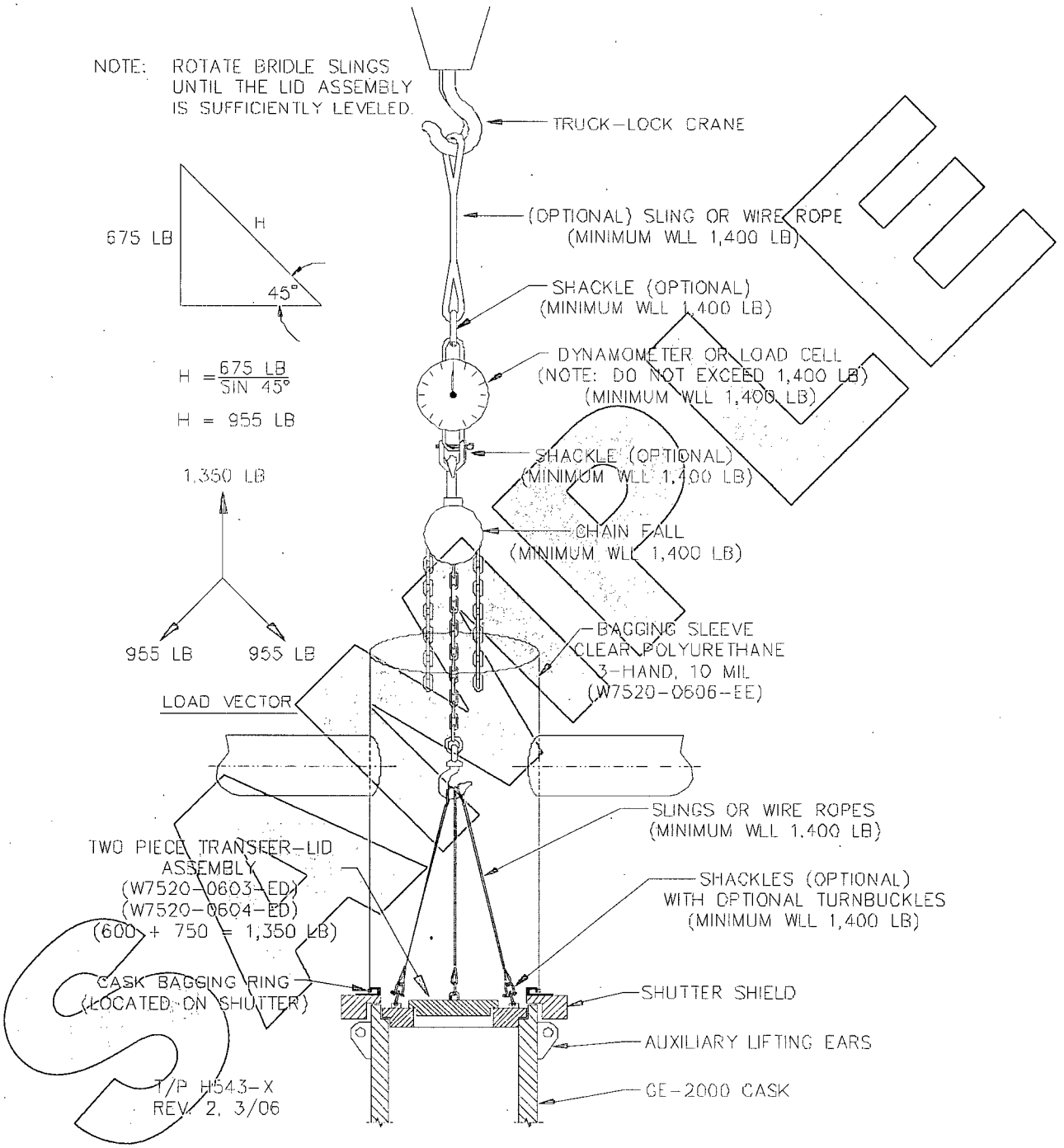

Fig. 8. Rigging Diagram for Transfer-Lid Assembly

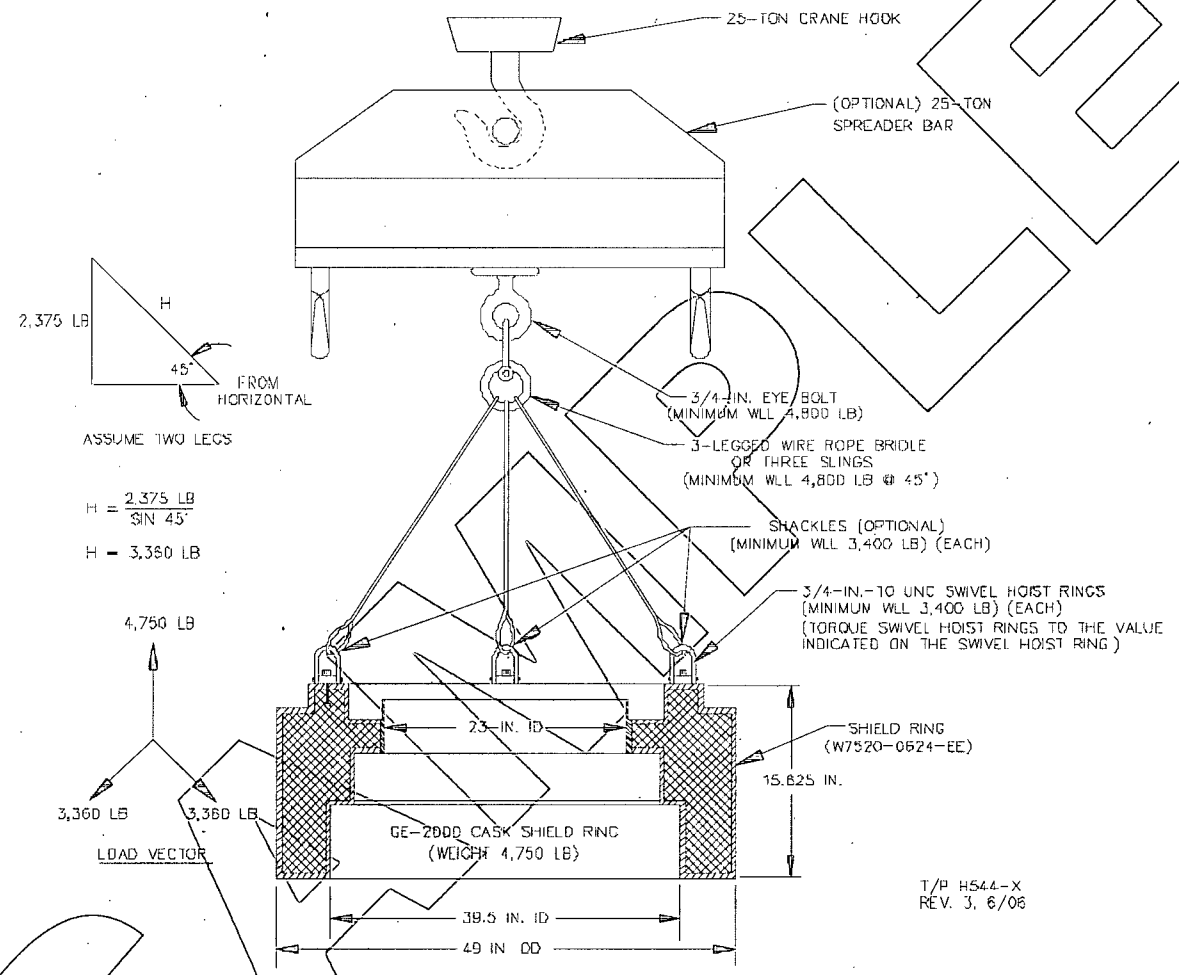

Fig. 9. Rigging Diagram for GE-2000 Shield Ring

SAMPLE

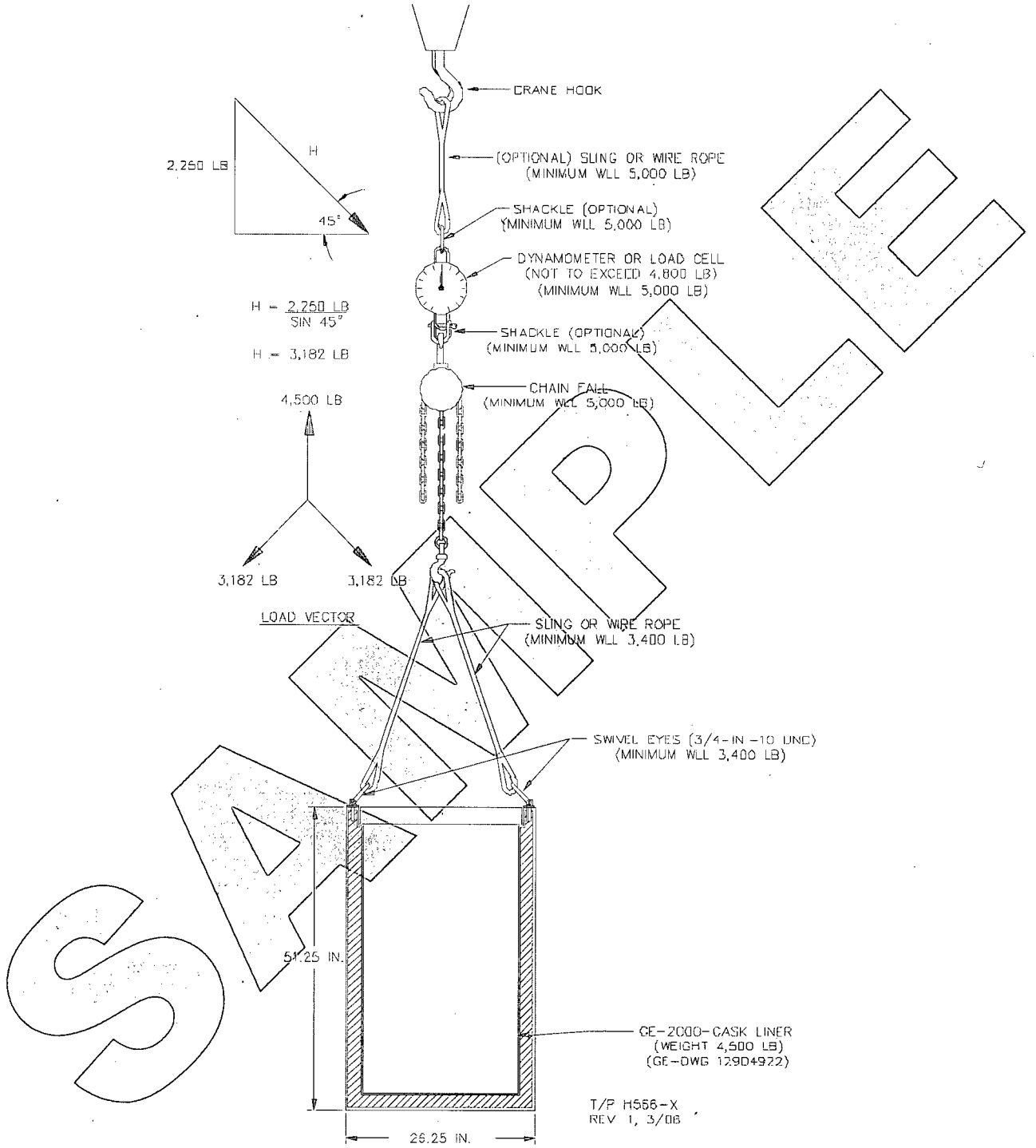

Fig. 10. Rigging Diagram for GE-2000-Cask Liner

SAMPLE

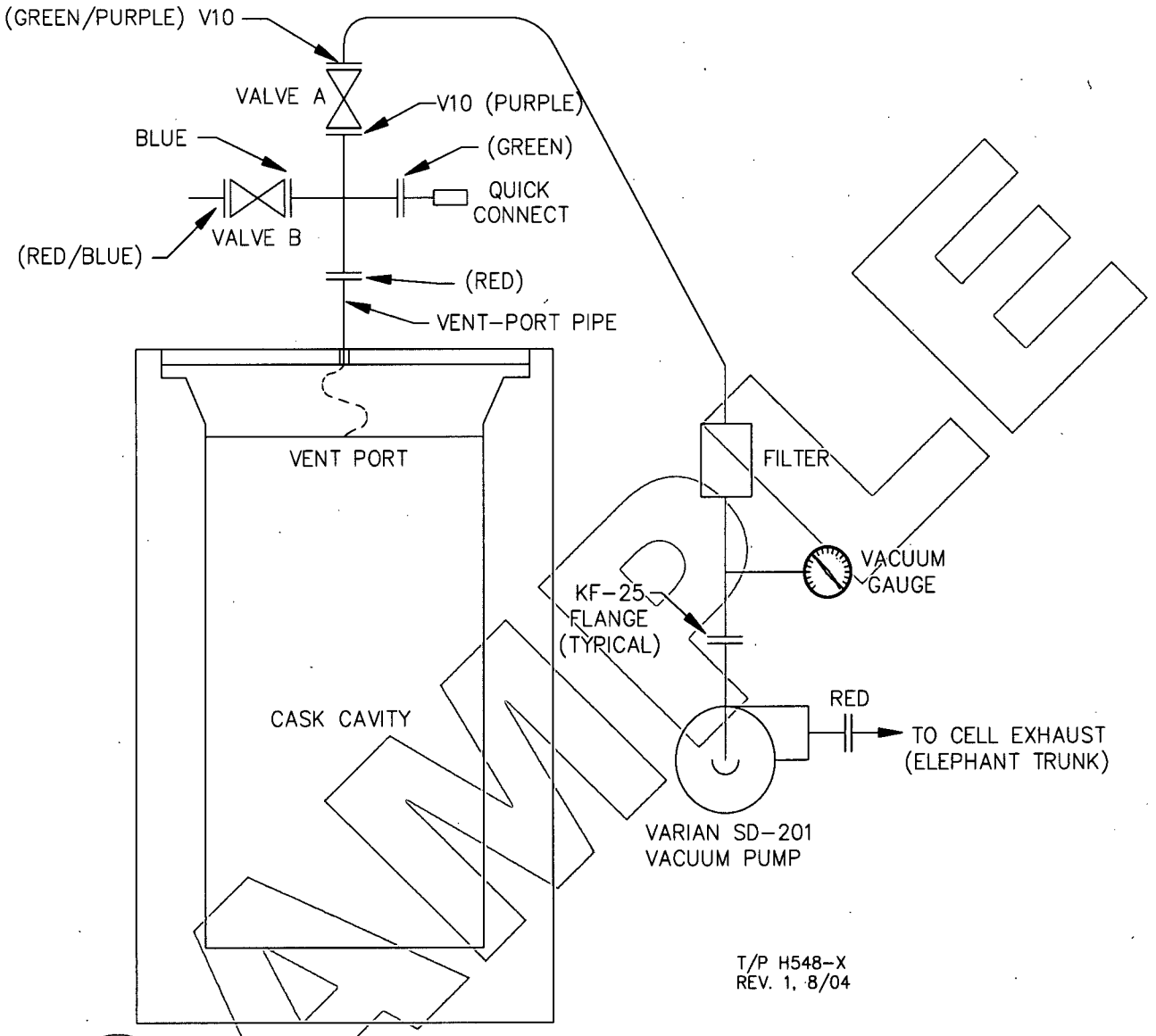

Fig. 11. Varian SD-201 Pump-Down Setup

SAMPLE

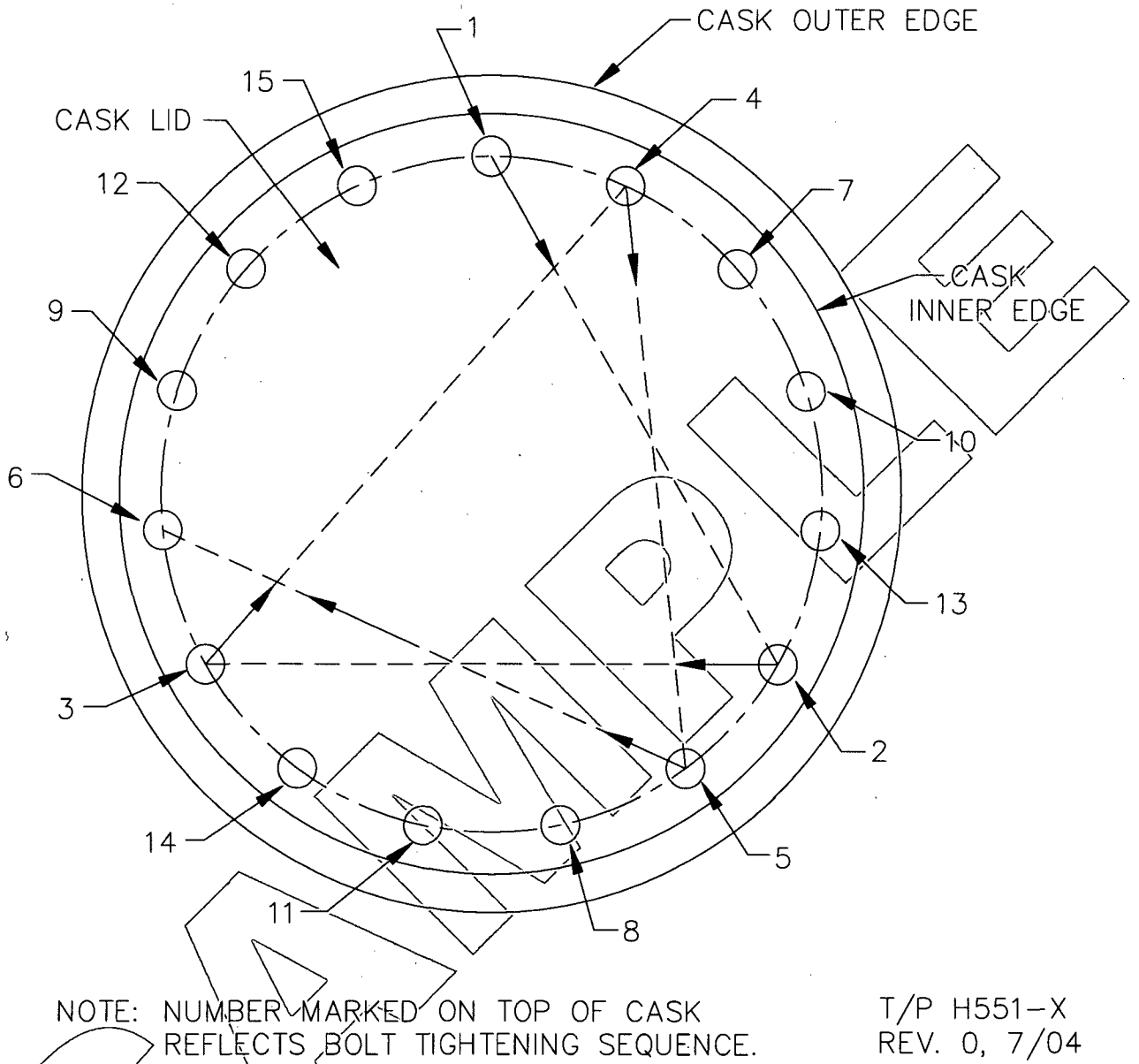

NOTE: NUMBER MARKED ON TOP OF CASK REFLECTS BOLT TIGHTENING SEQUENCE.

T/P H551-X
REV. 0, 7/04

Fig. 12. Cask-Lid Bolt Torquing Sequence

QUANITY	ITEM NO.	NAME	IDENTIFICATION
1	24	TORQUE WRENCH	SNAP-ON TOOLS P/N TQP250 OR EQUIV.
1	25	HEX-HEAD DRIVER	SNAP-ON TOOLS P/N SA20A OR EQUIV.
1	26	BREAKER BAR	1/2-IN. DRIVE
1	27	RATCHET	1/2-IN. DRIVE
1	28	EXTENSION	1/2-IN. DRIVE, 4-IN. LONG
1	29	SOCKET	1/2-IN. DRIVE, 3/4-IN. 6 POINT
1	30	WRENCH	12-IN. CRESENT
1	31	WRENCH	7/16-IN. OPEN/BOX END
1	32	ALLEN WRENCH	3/16-3/8-IN. SET
3	33	EXTENSION CORD	25-FT LONG, GROUNDED
1	34	THREAD LOCK	NO INDUSTRIES P/N VC-3 "VERA-TITE"
1	35	TAPE	NUCLEAR GRADE TAPE
1	36	LUBRICANT	NUCLEAR GRADE LUBRICANT
4	37	SLING	1-IN. BY 3-FT NYLON
4	38	SLING	2-IN. BY 8-FT NYLON
1	39	MARKER	NUCLEAR GRADE MARKER, BLACK ONLY
1	40	SLING	4-LEG, 1000 LB CAPACITY

QUANITY	ITEM NO.	NAME	IDENTIFICATION
1	1	TRAILER	TRUCKING INC. MODEL NO. TK60MC-482
1	2	OVERPACK STND ARRANGEMENT	SEE G.E. DRAWING 101E8756, GROUP 1
1	3	TRANSPORT STAND	SEE G.E. DRAWING 101E8761, GROUP 1
2	4	TIE-DOWN BRACKET	SEE G.E. DRAWING 183C8136, GROUP 1
2	5	TIE-DOWN BRACKET	SEE G.E. DRAWING 183C8336, GROUP 2
12	6	SHACKLE	1-3/8-IN. SCREW-PIN SHACKLE
4	7	WIRE ROPE	SEE G.E. DRAWING 218B6106, PT NO. 1
8	8	WIRE ROPE	SEE G.E. DRAWING 218B6106, PT NO. 2
4	9	RATCHET TURNBUCKLE	DURBIN PT NO. DD-CJ 18.00 BARREL LENGTH X 1.25-IN. DIA. THREAD OR EQUIV.
4	10	RATCHET TURNBUCKLE	DURBIN PT NO. DD-CJ 12.00 BARREL LENGTH X 1.25-IN. DIA. THREAD OR EQUIV.
1	11	OVERPACK COVER	SEE G.E. DRAWING 101E8749, GROUP 1 OR G.E. DRAWING 955E219, GROUP 1
1	12	OVERPACK BASE	SEE G.E. DRAWING 101E8749, GROUP 2 OR G.E. DRAWING 955E219, GROUP 2
1	13	7A CONTAINER	SEE G.E. DRAWING 105E9547, GROUP 1
6	14	4-IN. STRAP	SUPPLIED BY CARRIER
4	15	WIRE ROPE	SEE G.E. DRAWING 218B6106 PT NO. 3
	16		
2	17	TIE-DOWN BRACKET	SEE G.E. DRAWING 183C8336, GROUP 3
2	18	TIE-DOWN BRACKET	SEE G.E. DRAWING 183C8336, GROUP 4
8	19	JAM NUT	1.25-IN.-4 ACME THREADS, RIGHT HAND
8	20	JAM NUT	1.25-IN.-4 ACME THREADS, LEFT HAND
1	21	TOOL CHEST	McMASTER P/N 6758A13 OR EQUIV.
2	22	WRENCH	2-IN. OPEN END
1	23	TURNBUCKLE RATCHET	SEE G.E. DRAWING 166D8051, GROUP 1

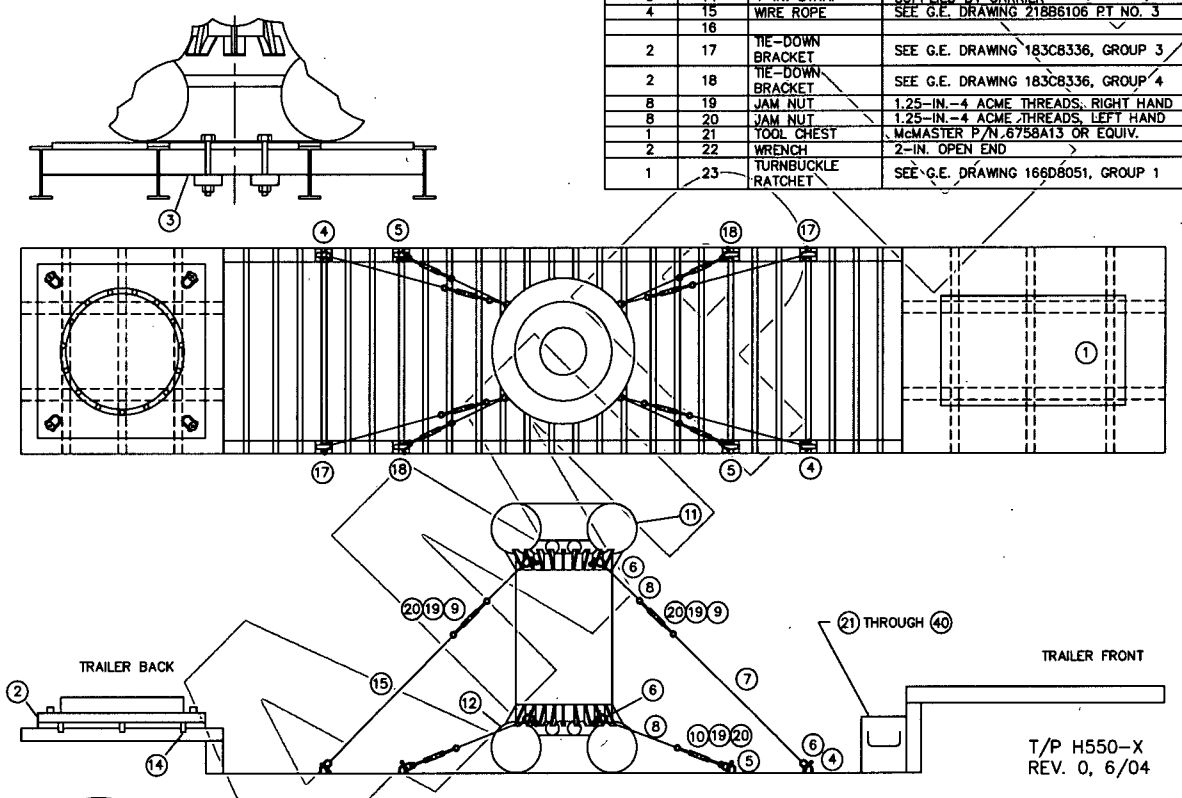

Fig. 13. Overpack-Cover Tie-Down Diagram

SAMPLE

(This page intentionally left blank.)

SAMPLE

Appendix A

List of Approved GE-2000 Cask Products

LIST OF APPROVED GE-2000 CASK PRODUCTS

This appendix provides a list of approved products that can be used during GE-2000 cask package activities. Use of these materials on the packaging will not adversely affect the packaging and/or equipment and systems in contact with the packaging. Only these materials that have been tested can be used. The use of other materials may be allowed, provided written permission is obtained from GE-VNC.

ANTI-SEIZE COMPOUNDS
Never-Seez Nickle Special (Bostik Div., Black & Decker Corporation)
Fel-Pro N5000 (Fel-Pro Inc., Skokie, Il.)
THREAD SEALANT COMPOUNDS
Vibra-Tite (Oakland Corporation/ND Industries)
CLEANING SOLUTIONS
12467, IC2417 (International Chemical Co., Philadelphia, Pa.
Van Straaten VLN Van Straaten Div., Castrol Metal Working Group, Chicago, Il.)
Turco 4521, Turco 4324, Truce 4324np (Turco Products Inc., West minster, Ca.
Radclean RC-8, RC-9, RC-10 (Epicor Inc., Linden, NJ)
Tergitol NOT
Crystal Green
MARKERS
Marks-A-Lot (black only) (Carter=s Ink Co., Waltham, Md)
Sharpie TEL Marker (black) (Sandford Corporation, Bellwood, Il)
ADHESIVE TAPES
Scotch No. 226 (black), Scotch No. 480 (clear)
Scotch No. 483 (black, white, or blue)
Scotch No. 850 (red, white, or black)
Scotch No. 5413 (3M Co., St. Paul, MN)
SMEAR AND WIPE MATERIAL
Whatman Filter Paper Cat. No. 1001-042 (Whatman International Ltd., Maidstone, England
WYPALL X60 Teri Reinforced Wipers (Kimberly-Clark)

SAMPLE

List of Approved GE-2000 Cask Products (cont.)

ANTI-C CLOTHING

TYVEC labcoat coveralls, Style 01101 (Lakeland Industries Inc.
Yellow rubber gloves, (Marigold Industrial, LRC Surety Products)

BAGGING MATERIAL

Polyurethane, 8-10 mil clear bagging sleeves (FabOhio, Inc.)
PVC, 8-mil bagging translucent and clear bagging sleeves (FabOhio, Inc.)

SHIELD RING AND CASK SUPPORT

Plywood for cask and lid set down
Polyethylene Strip Lennite CN-P UHMW static control, guide for cask adapter (Boe-decker Plastics Inc.)
Stainless-steel A240 and 304 (ASTM A240 and 304), concentric replacement lid and cask adapter support
Neoprene gasket material to support cask shield ring on top of cask lip
Cask/cask cart polyurethane stabilizing blocks

SHIPPING CONTAINERS

6061-T6 aluminum basket guide
6961-T6 aluminum basket

VENT, DRAIN AND SEAL PORTS/VENT PIPE FITTINGS

Teflon tape

SAMPLE

7.7 REFERENCES

[7.1] *International Atomic Energy Agency (IAEA) Safety Standards Series No. TS-R-1* (*IAEA TS-R-1*), "Regulations for the Safe Transport of Radioactive Material," 1996 Edition (as amended 2003).

[7.2] U.S. Nuclear Regulatory Commission (NRC), *Title 10, Code of Federal Regulations, Part 71 (10 CFR 71)*, "Packaging and Transportation of Radioactive Material," January 26, 2004.

[7.3] U.S. Department of Transportation (DOT), *Title 49, Code of Federal Regulations, Part 173 (49 CFR 173)*, "Shippers – General Requirements for Shipments and Packagings," Latest.

[7.4] U.S. Nuclear Regulatory Commission (NRC), *Title 10, Code of Federal Regulations, Part 20 (10 CFR 20)*, "Standards for Protection Against Radiation," 2005.

[7.5] U.S. Nuclear Regulatory Commission (NRC), *Title 10, Code of Federal Regulations, Part 21 (10 CFR 21)*, "Reporting of Defects and Noncompliance," January 1, 2003.

[7.6] U.S. Nuclear Regulatory Commission (NRC), *Title 10, Code of Federal Regulations, Part 73 (10 CFR 73)*, "Physical Protection of Plants and Materials," January 1, 2002.

[7.7] U.S. Department of Transportation (DOT), *Title 49, Code of Federal Regulations, Part 171 (49 CFR 171)*, "General Information, Regulations, and Definitions," Latest.

[7.8] U.S. Department of Transportation (DOT), *Title 49, Code of Federal Regulations, Part 174 (49 CFR 174)*, "Carriage by Rail," Latest.

[7.9] U.S. Department of Transportation (DOT), *Title 49, Code of Federal Regulations, Part 172 (49 CFR 172)*, "Hazardous Materials Table, Special Provisions, Hazardous Materials Communications, Emergency Response Information, and Training Requirements," Latest.

MARKUP

8 ACCEPTANCE TESTS AND MAINTENANCE PROGRAM

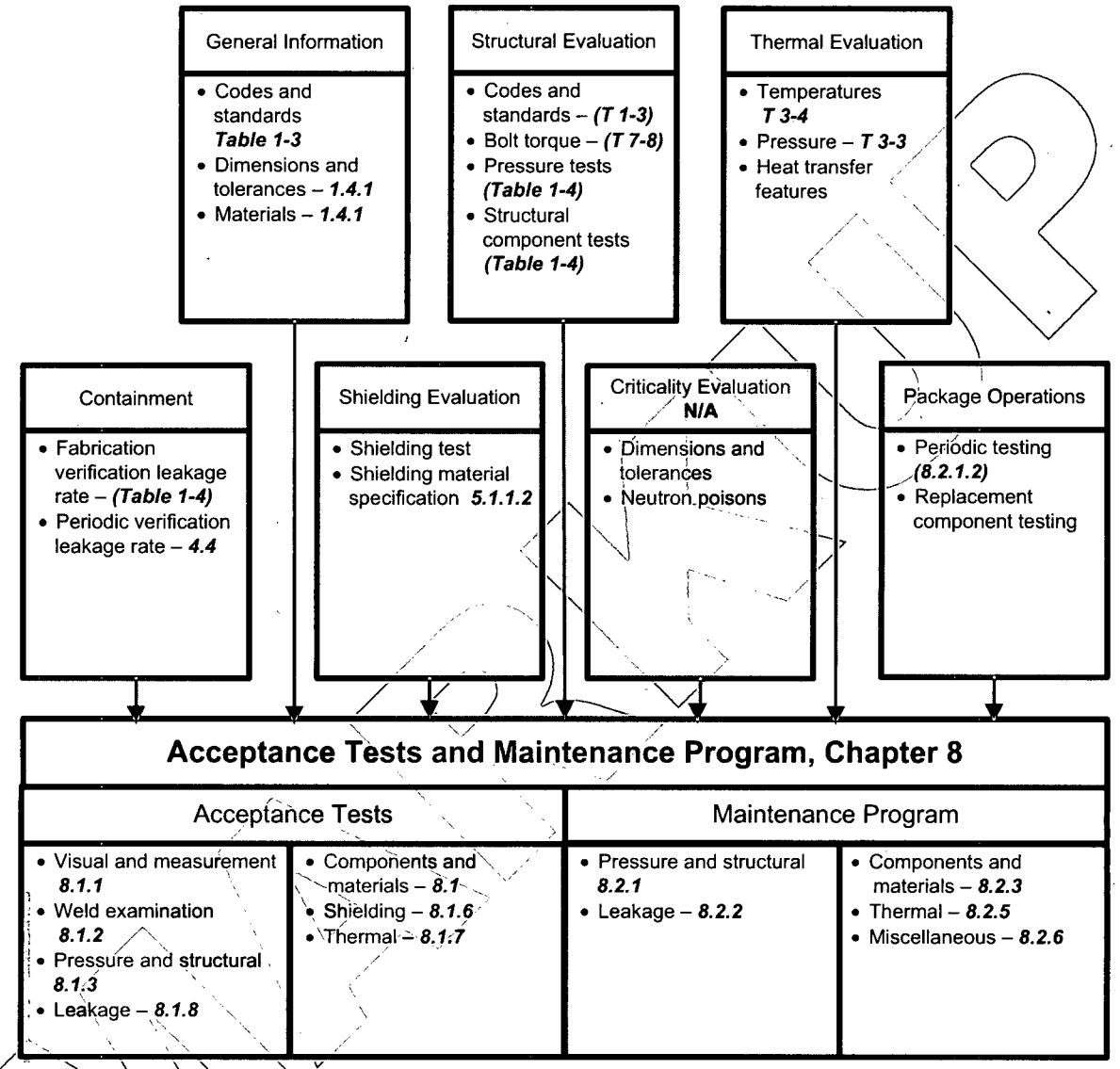

Note: *Unless indicated otherwise, all information related to the Model AOS-100A is also applicable to the Model AOS-100A-S.*

The test program required by *10 CFR 71*, Subpart G **[8.1]**, is prescribed to verify construction materials, fabrication processes, and package design adequacy in meeting the regulations. This chapter discusses the acceptance tests and maintenance program for the overall AOS Radioactive Material Transport Packaging System (AOS Transport Packaging System), with emphasis on the Model AOS-165 transport package, because it was the model that was fabricated, and thermal and drop tested.

Table 8-1 through Table 8-3 provide general information of the AOS Transport Packaging System related to their dimensions; the Codes and Standards applied to their design, fabrication and testing; and their components' materials of construction, respectively.

Table 8-1. AOS Transport Packaging System Dimensions and Cg Location – All Models

Model	Category	Dimensions (cm / in.)						Packaging Weight[a] (kg / lbs.)	Cg Location[b]		
		Packaging		Cask		Cavity					
		OD	Height	OD	Height	OD	Height		X	Y	Z
AOS-025A	III	28.96	39.62	17.78	22.86	4.14	12.70	71.4	19.05	19.05	26.34
		11.40	15.60	7.00	9.00	1.63	5.00	157	7.50	7.51	10.37
AOS-050A	III	57.96	79.25	35.56	45.72	8.26	25.40	511	41.91	41.91	46.28
		22.82	31.20	14.00	18.00	3.25	10.00	1,126	16.50	16.50	18.22
AOS-100A	II	115.93	158.50	71.12	91.44	16.51	50.80	3,950	91.44	89.15	80.03
		45.64	62.40	28.00	36.00	6.50	20.00	8,700	36.00	35.10	31.51
AOS-100B	III	115.93	158.50	71.12	91.44	16.51	50.80	3,232	91.44	89.15	80.03
		45.64	62.40	28.00	36.00	6.50	20.00	7,125	36.00	35.10	31.51
AOS-100A-S	II	115.93	158.50	71.12	91.44	16.51	50.80	3,901	91.44	89.15	80.03
		45.64	62.40	28.00	36.00	6.50	20.00	8,600	36.00	35.10	31.51
AOS-165A	I	191.26	264.16	117.35	150.88	27.23	83.82	18,234	152.40	121.41	121.92
		75.30	104.00	46.20	59.40	10.72	33.00	40,200	60.00	47.80	48.00
AOS-165B	I	191.26	264.16	117.35	150.88	27.23	83.82	15,535	152.40	121.41	121.92
		75.30	104.00	46.20	59.40	10.72	33.00	34,250	60.00	47.80	48.00

a. All AOS Transport Packaging System models have dimensions greater than 10 cm (4 in.).

b. Refer to Figure 2-13, "Center of Gravity – Model AOS-100."

NIP

Table 8-2. Codes and Standards for Design, Fabrication, and Testing

Package Components or Features	Component Safety Group										
	Containment		Criticality	Other Safety							
	Primary Vessel, Bolts, Piping, Fittings and Closure Bolts	Primary Seal	Support Structure/ Neutron Absorber	Gamma Shielding	Structural Shell, Bolts, and Closure	Secondary Seal	Neutron Shielding, Piping and Fittings	Lifting Lugs	Heat Transfer Devices	Tie-Down Devices	Impact Limiters
Safety Classification	A	A	A	B	B	B	B	B	A	B	A
B&PV Code Section	Sec. III, Division 3		Sec. III, Division 1, Subsection NG	Sec. III, Division 1, Subsections NG and NF							Sec VIII, Division 1
Material Requirements	WB-2000		NG-2000	SAE-AMS-T-21014, Class 3	NF-2000		NF-2000	NF-2000	NG-2000	NF-2000	UG
Forming, Fitting and Aligning	WB-4200		NG-4200		NF-4200		NF-4200	NF-4200	NG-4200	NF-4200	UG
Welding	WB-4400		NG-4400		NF-4400		NF-4400	NF-4400	NG-4400	NF-4400	UW
Qualification of Weld Procedure and Personnel	WB-4300		NG-4300		NF-4300		NF-4300	NF-4300	NG-4300	NF-4300	UW
Weld Heat Treatment	WB-4600		NG-4600		NF-4600		NF-4600	NF-4600	NG-4600	NF-4600	UW
Examination	WB-5000		NG-5000		NF-5000		NF-5000	NF-5000	NG-5000	NF-5000	UW/UG
Acceptance Testing	WB-6000	ANSI N14.5	Gamma Scan Test	Guidelines ASTM B311-2002	Per Applicable Code Standards	ANSI N14.5	–	ANSI N14.6	Per Paragraph 8.1.7	ANSI N14.6	Per Table 8.4

Table 8-3. Material Selection of Major Transport Packaging System Components (Typical)

Component	Material Selection	1st Alternate Material	2nd Alternate Material	Reference Drawing[a]	Item No.
Cask					
Outer Shell	ASME SA-451/ASTM A451, GRADE CPF 8	ASME SA-351/ASTM A351, GRADE CF 8	ASME SA-182/ASTM A182 GRADE F304 OR F316	105E9712G001	1
Cavity Shell	ASME SA-182/ASTM A182 GRADE F304 OR F316	ASME SA-351/ASTM A351, GRADE CF 8	ASME SA-451/ASTM A451, GRADE CPF 8		3
Lid	ASME SA-240/ASTM A240 TYPE 304 OR 316	ASME SA-182/ASTM A182 GRADE F304 OR F316	–		2
Shielding Material	TUNGSTEN MIL/AMS-T-21014 CLASS 3	CARBON STEEL FORGING PER ASME SA-105	–		4, 8, 12
Lid Plug	ASME SA-240/ASTM A240 TYPE 304 OR 316	ASME SA-182/ASTM A182 GRADE F304 OR F316	–		6
Cover Plate	ASME SA-240/ASTM A240 TYPE 304 OR 316	ASME SA-182/ASTM A182 GRADE F304 OR F316	–		7
Trunnion	ASME SA-479/ASTM A479 TYPE 316	–	–		5
Bottom Plate	ASME SA-240/ASTM A240 TYPE 304 OR 316	ASME SA-182/ASTM A182 GRADE F304 OR F316	–		13
Lid Attachment Bolts	ASME SB-637 UNS N07750 TYPE 3	–	–		15
Port Plug	ASME SA-182/ASTM A182 GRADE F304 OR F316	ASME SA-479/ASTM A479 TYPE 316	–		16
Impact Limiter					
Shell and Ribs	ASME SA-240/ASTM A240 TYPE 304 OR 316	–	–	105E9713	1 – 11
Foam	POLYURETHANE FOAM GP 3700 SERIES	–	–		12

a. The Model AOS-100A drawings are used for this tabulation.

8.1 ACCEPTANCE TESTS

The inspection and acceptance tests are specified in the engineering specifications and drawings for the AOS Transport Packaging System and governed by the Quality Assurance Program covering all design, fabrication, and operation activities. Non-Destructive Examination (NDE) procedures and acceptance standards are based upon the ASME Code, Section III, Division 1 **[8.2]** or Division 3 **[8.3]**.

Table 8-4 presents a summary of the overall AOS Transport Packaging System acceptance test program. Table 8-5 through Table 8-11 define the acceptance test programs for materials, fabrication processes, and design verification.

Table 8-4. Acceptance Test Matrix

Test Type	Model						
	AOS-025A	AOS-050A	AOS-100A	AOS-100B	AOS-100A-S	AOS-165A	AOS-165B
Acceptance							
Materials							
Metals	✔	✔	✔	✔	✔	✔	✔
Foam[a]	–	–	–	–	–	✔	–
Seal[b]	✔	✔	✔	✔	✔	✔	✔
Weld	✔	✔	✔	✔	✔	✔	✔
Verification							
Materials							
Foam[c]	✔	✔	✔	✔	✔	✔	✔
Weld	✔	✔	✔	✔	✔	✔	✔
Seal[d]	✔	✔	✔	✔	✔	✔	✔
Containment[e]	✔	✔	✔	✔	✔	✔	✔
Thermal	–	–	–	–	–	✔	–
Mechanical	–	–	–	–	–	✔	–
Containment[f]	✔	✔	✔	✔	✔	✔	✔
Gamma[g]	✔	✔	✔	✔	✔	✔	✔

a. Formulation tests are performed upon initial order or formulation change.

b. Vendor performs independent material verification.

c. Batch tests are performed upon each batch required to fulfill an order. Increment or Pour tests are performed upon each pour of every batch.

d. Vendor to perform Environmental test upon initial order or material change.

e. Pressure testing at 150% design pressure 10 CFR 71.85(b) **[8.1]**.

f. MSLD He Test at least 2.00E-08 Std atm-cc/sec sensitivity.

g. Performed prior to first shipment or sooner.

Table 8-5. Type 304 and 316 Material Requirements

Definition	Requirements	Test Frequency	Remarks
Base Specification			
Suffix W	ASME SA-479/ASTM A 479 Type 304	–	Bar and Shapes
Suffix W1	ASME SA-479/ASTM A 479 Type 316	–	Bar and Shapes
Suffix X	ASME SA-312/ASTM A 312, Grade TP 304	–	Pipe
Suffix X1	ASME SA-312/ASTM A 312, Grade TP 316	–	Pipe
Suffix Y	ASME SA-182/ASTM A 182, Grade F 304	–	Forgings
Suffix Y1	ASME SA-182/ASTM A 182, Grade F 316	–	Forgings
Suffix Z	ASME SA-240/ASTM A 240, Type 304	–	Plate, Sheet, and Strip
Suffix Z1	ASME SA-240/ASTM A 240, Type 316	–	Plate, Sheet, and Strip
Chemistry Modification	C ≤ 0.050 (all suffixes) N	One Chemical Analysis Required per Heat	–
Heat Treatment	**Inventory Material** – 1,040°C (1,900°F), minimum, in accordance with the Base Specification. **New Wrought Material** – 1,040 to 1,149°C (1,900 to 2,100°F) for 15 min/25 mm (15 min/1 in.) of thickness, but not less than 15 minutes. **All Materials – Alternate quenching methods require prior AOS approval.**	One per Heat and Heat Treat Lot	Certification Statement
Descaling (Oxide Removal)	Pickling performed in accordance with Treatment Code A of ASTM A380. **Other descaling methods are permitted with prior AOS approval.**	–	After final solution heat treatment
Mechanical Tests	Properties at Room Temperature, as required by the Base Specification.	One per Heat and Heat Treat Lot	After final solution heat treatment
Hardness Test	Not to exceed Rockwell B90, per ASTM A370.	One per Heat and Heat Treat Lot	After final solution heat treatment
Sensitization Test	ASTM A262 Practice A - Modified – Material having ditching greater than 5% is unacceptable. Can be waived by AOS for material not exposed to reactor water environments at elevated temperatures for extended periods of time. Referee testing, using electrolytic nitric solution, is permitted.[a]	**Inventory Material** – 10% of Supplied Pieces **New Material** – One per Heat and Heat Treat Lot	After final solution heat treatment

Table 8-5. Type 304 and 316 Material Requirements (Continued)

Definition	Requirements	Test Frequency	Remarks
Intergranular Attack	Surface sample after pickling or if pickling is not used after final heat treatment – IGA or pitting in excess of 0.025 mm (0.001 in.) deep is unacceptable.	**Inventory Material** – 10% of Supplied Pieces **New Material** – One per Heat and Heat Treat Lot	After final solution heat treatment and oxide removal (if applicable)
Non-Destructive Examination	As required by the Base Specification and/or applicable ASME Section III requirements, **[8.2]** and **[8.3]**.	100%	–

a. *The Referee test for sensitization is used as a second check if the A262 results are borderline or inconclusive. The 5% ditching acceptance criteria is imposed by GE, and is tighter than A262 itself; where practice A is used only for screening, and practice E for acceptance. Nevertheless, the Referee testing was not needed, nor used, on the AOS Cask, Model AOS-165A, Serial No. 001.*

MARKUP

Table 8-6. Bolting Material Requirements

Definition	Requirements	Test Frequency	Remarks
Base Specification			
Suffix W	SA-193 Grade B6	–	Bolting materials
Suffix X	SA-193 Grade B8RA	–	Bolting materials
Suffix Y	SA-564 Type 630 H1100	–	Bar (for bolting)
Suffix Z	SB-637 UNS N07750 Type 3	–	Bolting materials
Chemistry Modification (Weight %)	No modification Chemistry, as required by the Base Specification.	One Chemical Analysis Required, per Heat	–
Heat Treatment	As required by the Base Specification.	One per Heat and Heat Treat Lot	Certification Statement
Mechanical Tests	As required by the Base Specification.	One per Heat and Heat Treat Lot	After heat treatment, per ASME SA370
Hardness Test	As required by the Base Specification.	One per Heat and Heat Treat Lot	After final heat treatment
Sensitization Test	Test not required.	–	–
Intergranular Attack (IGA)	Appendix A30.	After Pickling	AOS to approve sampling plan
Weld Repair	Weld repair is not permitted on bolting materials.	–	–
Non-Destructive Examination	As required by Code and Appendix A50.	100%	–

MARKUP

Table 8-7. CPF-8, CF-8 Material Requirements

Definition	Requirements	Test Frequency	Remarks
Base Specification			
Suffix T	ASME SA-451/ASTM A 451 Grade CPF8	–	Cast Pipe
Suffix U	ASME SA-351/ASTM A 351 Grade CF8	–	Casting
Chemistry Modification	As required by the Base Specification.	One Chemical Analysis Required per Heat	–
Ferrite Content	Controlled within the allowable limits of the Base Specification, to produce a minimum ferrite content of 5%, as determined magnetically by Practice ASTM A800, S1.	One Analysis Required per Heat and Heat Treat Lot	Ferrite to be measured on an actual casting, after final solution heat treatment
Heat Treatment	Solution Heat Treat at 1,040°C (1,900°F), minimum, in accordance with the Base Specification.	One per Heat and Heat Treat Lot	Certification Statement
Mechanical Tests	Properties at Room Temperature, as required by the Base Specification.	One per Heat and Heat Treat Lot	After final solution heat treatment
Hardness Test	As required by the Base Specification.	One per Heat and Heat Treat Lot	After final solution heat treatment
Sensitization Test	Not required.	–	–
Intergranular Attack (IGA)	Surface sample after pickling or if pickling is not used after final heat treatment. IGA or pitting in excess of 0.025 mm (0.001 in.) deep is unacceptable.	**Inventory Material** – 10% of Supplied Pieces **New Material** – One per Heat and Heat Treat Lot	After final solution heat treatment and oxide removal (if applicable)
Non-Destructive Examination	As required by the Base Specification, Radiography per NB-2575, and additional applicable requirements of ASME Section III, **[8.2]** and **[8.3]**.	100%	–
Weld Repair	**Procedures require AOS approval prior to performance of the repair work.** **Repairs to castings subsequent to solution annealing must be documented and submitted to AOS.**	–	Buyer approval required for repair procedure

PRELIMINARY

Table 8-7. CPF-8, CF-8 Material Requirements (Continued)

Definition	Requirements	Test Frequency	Remarks
Cleaning/Surface Preparation	Surfaces shall be visibly free of miscellaneous processing materials and essentially free of contaminants of concern, including chlorides, fluorides, sulfur, bromides, lead, mercury, and other low-melting-point metals. Water used for cleaning must meet the following requirements: **Attribute** — **Potable Water** — **Demineralized** pH at 25°C (7°F) — 5.5 to 8.0 — 5.5 to 8.0 Chlorine, ppm — < 35 — < 1 Fluorine, ppm — < 10 — < 1 Sulfide, ppm — < 1 — < 1 Silica — – — < 0.05 ppm Conductivity µS/cm — – — < 3 Final cleaning must be performed with demineralized water and can be performed by the Fabricator.	All Materials	–

MARKUP

Table 8-8. Packaging Polyurethane Foam Testing and Sampling Plan – Model AOS-165

Test Type[a]	Test Description	Number of Samples	Nominal Value	Tolerance[b] (of Nominal)	Sample Size L x W x H (in.)
Formulation	Density, pcf (kg/m^3)	3	20 (320)	Each ±15% Increment ±10%	2 x 2 x 1
	Static Crush Strength, psi (kPa)	3[c]	Report Value	Report Value	1 x 1 x 1 and 2 x 2 x 2
	Flame Retardancy	3	Burn length * 6 in.	–	0.5 x 3 x 6+
	Intumescence	2	50%	Minimum	2 x 2 x 2
	Leachable Chlorides	1	1 ppm	< 1 ppm	2 x 2 x 2
	Thermal Conductivity, Btu * in. / (ft^2 * °F * h) (W / (m * °K))	1	0.349 (0.050)	Each ±15%	8.0 dia. x 1.0 L
	Specific Heat, Btu/hr-°F	1	0.351	Each ±20%	As Required
	Water Absorption	3	0.05 lbs of water per ft^2 in 96 hours	Not to Exceed Nominal	6 x 6 x 3
	Chemical Composition	1 sample per formulation	Report Value	Report Value	As Required
Batch	Density, pcf (kg/m^3)	3	20 (320)	Each ±15% Increment ±10%	2 x 2 x 1
	Static Crush Strength, psi (kPa)	3[d]	Refer to Table 8-9	Each ±15% Increment ±10%	2 x 2 x 1
	Flame Retardancy	3	Burn length * 6 in.	–	0.5 x 3 x 6+
	Intumescence	3	50%	Minimum	2 x 2 x 2
	Leachable Chlorides	2	1 ppm	< 1 ppm	2 x 2 x 2

MARK

Table 8-8. Packaging Polyurethane Foam Testing and Sampling Plan – Model AOS-165 (Continued)

Test Type[a]	Test Description	Number of Samples	Nominal Value	Tolerance[b] (of Nominal)	Sample Size L x W x H (in.)
Pour	Static Crush Strength, psi (kPa)	3[d]	Refer to Table 8-9	Each ±15% Increment ±10%	2 x 2 x 1
	Density, pcf (kg/m^3)	3	20 (320)	Each ±15% Increment ±10%	2 x 2 x 1

a. *Formulation tests are performed upon initial order or formulation change. Batch tests are performed upon each batch required to fulfill an order. Increment or Pour tests are performed upon each pour of every batch.*

b. *Each sample must meet the indicated test tolerance. In cases where multiple samples were taken, the indicated tolerance applies to the numerical average result of the samples. For example, each static crush test result must be ±20% of the nominal value, and the average of the samples must be ±15% of the nominal value.*

c. *Three (3) samples are tested at each of the following temperatures – -40°C, 24°C, and 121°C (-40°F, 75°F, and 250°F, respectively) – at strains of 10%, 40%, and 60%, in each direction; Parallel to Direction of Rise and Perpendicular to Direction of Rise.*

d. *Three (3) samples are tested at 24°C (75°F), at strains of 10%, 40%, and 60%, in each direction; Parallel to Direction of Rise and Perpendicular to Direction of Rise.*

MARKUP

Table 8-9. LAST-A-FOAM FR-3700 Series Static Crush Strength Nominal Values

FR-3700	Parallel (psi)[a]			Perpendicular (psi)[a]		
	ε = 10%	ε = 40%	ε = 60%	ε = 10%	ε = 40%	ε = 60%
-20%	745	964	1,927	769	1,021	2,000
-15%	791	1,024	2,048	817	1,085	2,125
Nominal	931	1,205	2,409	961	1,276	2,500
15%	1,071	1,386	2,770	1,105	1,467	2,875
20%	1,117	1,446	2,886	1,153	1,531	3,000

a. Data provided by supplier, and represents "in-situ" conditions.

Table 8-10. Fabrication Inspection

Process	Inspection Type				
	Visual Test (VT)	Penetrant Test (PT)	Ultrasonic Test (UT)	Leak Test (LT)	Hydrostatic
Assembly	✔			✔[a]	
Component Surface	✔	✔			
Subassembly				✔	✔
Weld	✔	✔	✔[b]		

a. Containment boundary only.

b. Hydrostatic test is performed.

Table 8-11. Design Verification Test Matrix

Test Category	Test Type	References	Test Description
1. Containment	Leak	ANSI N14.5 - 1997 **[8.5]**	MSLD – Evacuated envelope with back pressurization.
2. Thermal	Thermal transmission properties	Engineering Specification	7-kW heat source in cask cavity with axial, radial, and ambient temperature monitoring to steady state and cool down.
3. Containment	Leak	ASME WB-6200	Hydrostatic Test at 150% design pressure.
4. Impact	9-m (30-ft.) Free-Drop test – three (3) orientations	Engineering Specification	Free drops on head-on, side, and Cg/Corner orientations.
5. Containment	Leak	ANSI N14.5 - 1997 **[8.5]**	MSLD – Evacuated envelope with back pressurization.
6. Shielding	Dose rate mapping	Engineering Specification	Dose rate mapping of cask external surfaces, due to an internal gamma source.

WORKING DRAFT

8.1.1 Visual Inspections and Measurements

Visual examinations of all component surfaces, including welds and dimension inspections, are conducted during packaging fabrication. These inspections, as well any other NDE inspections, are conducted according to approved written procedures. Their objectives are to identify harmful discontinuities (such as overlaps, seams, cracks, porosity, crevices, excessive oxidation, and so forth), and to verify that the component or item critical dimensions are met, as specified in the certification drawings. (Refer to Table 7-6, "AOS Transport Packaging System Certification Drawing List – All Models," for a complete list.)

Results are documented in the Visual Inspection and Dimensional Inspection reports, located in the Fabrication Record file. Any indication found, as described above, shall be repaired or disposed of, in accordance with a written procedure issued by the Fabricator.

8.1.2 Weld Examinations

All welds within the cask component and impact limiters are visually and liquid-penetrant tested (root and final passes). Also, the weld within the containment boundary must be ultrasonically and liquid-penetrant tested. These inspections are performed to ensure that no cracks, incomplete fusion, nor lack of penetration exist. Parts that do not meet the established criteria are repaired or replaced, in accordance with written procedures issued by the Fabricator and approved by AOS.

The Model AOS-165 transport package has the option of two (2) weld configuration types:

- Circumferential, ASME Code type A weld
- Corner, ASME Code type C weld

The Model AOS-025, AOS-050, and AOS-100 transport packages use only the corner type C weld.

When the type A weld is used for the Model AOS-165 transport package, the required X-ray examination of the weld is replaced by an Ultrasonic Test (UT), per ASME Code Case N-659 **[8.4]**. Weld configuration types are discussed in Chapter 4, Subsection 4.1.1, "Containment Boundary."

8.1.3 Structural and Pressure Tests

In addition to the test described in Subsection 8.1.2, the cask cavity is hydrostatically tested, to ensure that the containment boundary can support the Design Pressure, per the requirements of NB6200, Subsection NB, Section III of the ASME Code **[8.2]** and **[8.3]**. The Test Pressure is 1.5 times the size of the Design Pressure.

8.1.4 Leak Tests

The assembled cask is leak-tested, by pressurizing the cavity to 1 atmosphere above the background cask cavity with helium when the cavity has been evacuated. Leak testing of the vent port plugs, drain port plugs, and lid seal is performed, using an MSLD with a sensitivity of $<1 * 10^{-9}$ atm cc/sec. The lid seal is tested by connecting the test probe to a test port between the two seal rings of the seal, and determining the leak rate. A leak-tightness criterion of 10^{-7} atm cm^3/sec or less, based upon dry air at 25°C (32°F) and for a pressure differential of 1 atm, is used. If the leak-tightness criterion is not met, a new seal must be installed and tested.

DRAFT

8.1.5 Component and Material Tests

8.1.5.1 Valves, Rupture Discs, and Fluid Transport Devices

Component tests of valves, rupture discs, and/or fluid transport devices are not applicable, because these parts do not exist in any of the AOS Transport Packaging System models.

8.1.5.2 Materials

Table 8-5 through Table 8-7 present the test requirements prescribed by each material specification and may contain additional tests, in some cases, included by the designer.

8.1.5.3 Seal Testing

The seal-testing procedure is based upon *ANSI N14.5-1977* **[8.5]**. The seal material is tested under the temperature environments listed in Table 8-12.

The seal material is mounted in a test flange, and leak-tested with an MSLD. Seal material exceeding the allowable leak rate is rejected. The test flange/seal assembly matches the force per inch on the seal, and the flange stiffness to that of the actual joint in the cask. Initial seal qualification test results are presented in Chapter 4, Appendix 4.5.1, "Helium Leak Qualification Test of Garlock Helicoflex H309352 and 309353-5." The test reported in Appendix 4.5.1 was performed to demonstrate that the selected seal materials are able to perform at their temperature limits. It was not used to qualify the seal joint. The seal joint qualification test is performed with the actual joint using the cask, seal, lid, and bolting installed, as prescribed, in the Acceptance Test and Annual Test procedures.

Table 8-12. Metallic Lid Seal Testing Temperature Environments – All Models

Minimum		Typical		Maximum	
°C	°F	°C	°F	°C	°F
-40	-40	21	70	427	800

8.1.6 Shielding Tests

The AOS Transport Packaging System uses either tungsten alloy or carbon steel as its shielding material. Confirming the density of each piece or component provides the necessary inspection process for the shielding attribute of these materials. In addition, prior to the first use of the transport package, a Co-60 source is placed inside the cask cavity and its outside surface is surveyed with a gamma detection instrument. Equally spaced meridian and circumferential lines, along the vertical axis, divide the outside cask surface in approximate 10 x 10 cm (4 x 4 in.) squares. Dose rate readings are taken over each corner and center of the square area created by these lines. The criterion used to evaluate the effect of material defects (such as voids, cracks, and so forth) is that the dose rate cannot exceed 1.5 times the mean dose rate.

DRAFT

8.1.7 Thermal Tests

A thermal test is performed to evaluate the analytical model used, to demonstrate compliance with the thermal regulatory environments. The test results are compared with the results of the analytical model subjected to the same environment as the test. The test results are provided in Appendix 8.3.1, "Heat Test Report."

8.1.7.1 Test Setup Discussion

Test setup consists of concentrically placing an electrical heat source within the cask cavity. Temperature-sensing devices are strategically placed at various locations within the cask cavity, on exterior surfaces of the cask, and in the environment surrounding the cask. The heat source is turned on to a value equal to or greater than the decay heat value of the radioactive source proposed for the cask. Temperature data is recorded at a minimum interval of one (1) minute during the transient event, until the cask reaches a steady state and remains significantly unchanged for approximately one (1) hour. This completes the "heating cycle." Thereafter, the heat source is turned off, to allow the cask to cool down. The "cool down cycle" is also recorded, as in the previous cycle.

MARKUP

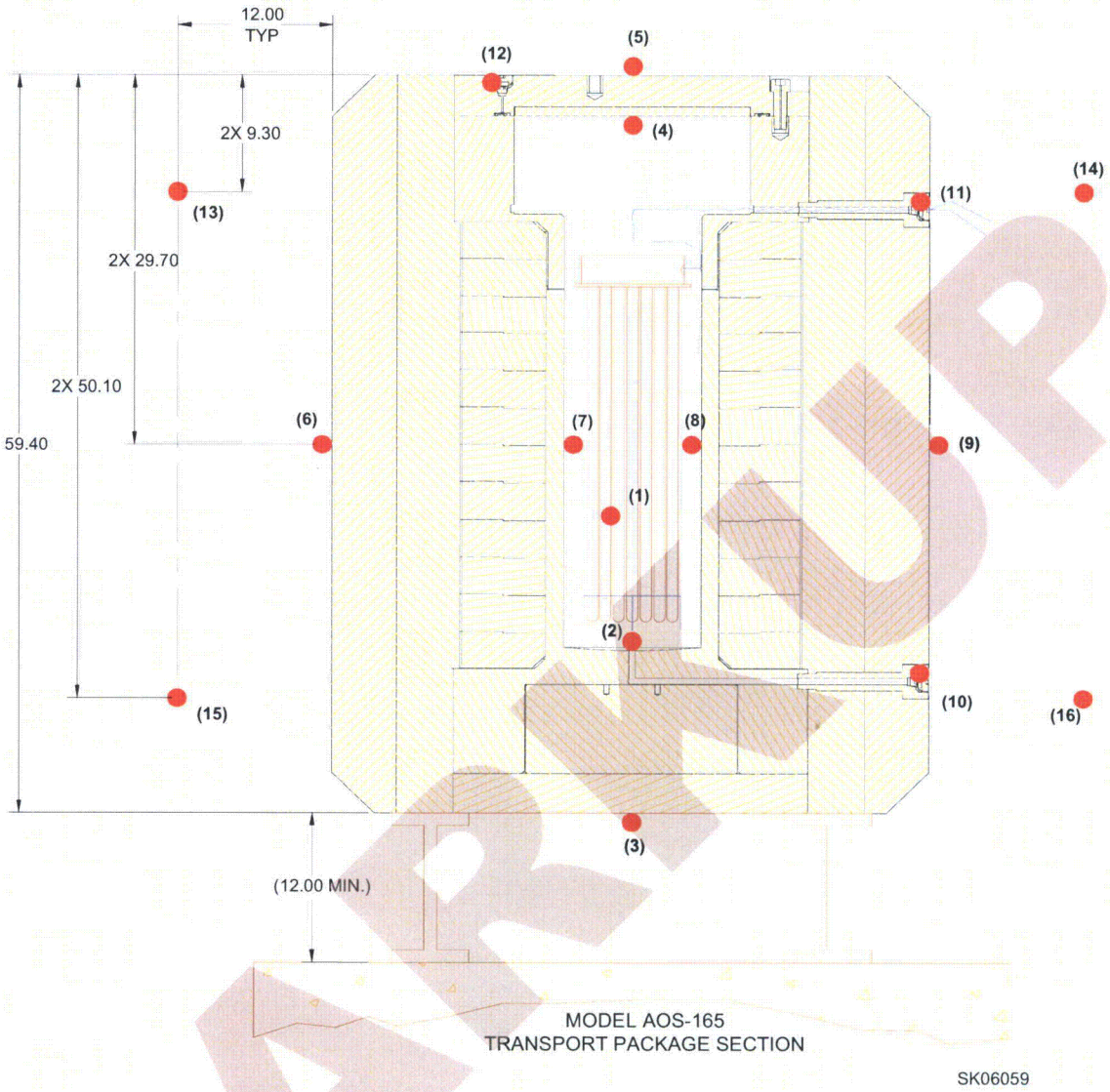

Figure 8-1. Thermal Test Setup – Model AOS-165

Notes: *The numbered red dots in Figure 8-1 represent thermocouple locations.*

The dimensions provided in Figure 8-1 are those of the Model AOS-165 transport package.

All dimensions are in inches.

MARKUP

8.1.7.2 Test Procedure

A 7-kW heat source is placed in the cask cavity, and the resulting temperatures are recorded until the system reaches steady state. The test is conducted inside a 3m L x 3m W x 3m D (10 ft. L x 10 ft. W x 10 ft. D) pit, to maintain the ambient temperature as constant as possible during the entire test. The instrumented cask sits upon a fiber steel wool insulation pad, on top of a 46-cm (18-in.) high carbon steel pedestal located inside the pit. Figure 8-2 illustrates the instrumented cask inside the pit. Temperature data is recorded once per minute with a data acquisition system permitting easy analysis and plotting of the results, until the temperature remains significantly unchanged. The heat source is then turned off and data is recorded once per minute, until the system temperature returns close to the initial ambient condition.

Figure 8-2. Instrument Cask Inside Pit

MAGNOX

8.1.7.3 Acceptance Criteria

Thermal test results are provided in Figure 8-3 through Figure 8-6. Figure 8-3 and Figure 8-4 illustrate the heat cycle test results. Figure 8-5 and Figure 8-6 illustrate the cooling cycle test results.

A verification analysis was performed. An axisymmetric (2D) model of the test article is analyzed with a 7,000W heat source, illustrated in Figure 8-7. Figure 8-8 illustrates its heat cycle boundary conditions, and Figure 8-9 illustrates its cooling cycle boundary conditions.

The eight (8) thermocouples located on the test cask – TC 3, 4, 5, 6, 7, 10, 11, and 12 – are used for comparing test results with analysis. (Refer to Figure 8-1.) Thermocouple temperature comparison results are provided in Figure 8-10 through Figure 8-17.

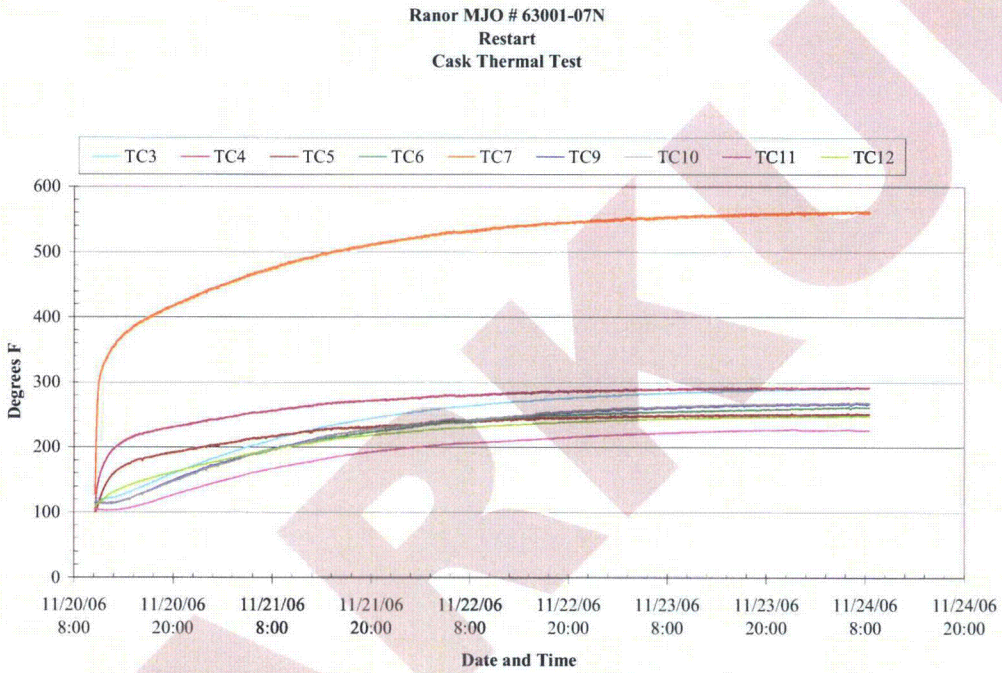

Figure 8-3. Temperature versus Time – Heat Cycle for Thermocouples 3 through 12

MARKUP

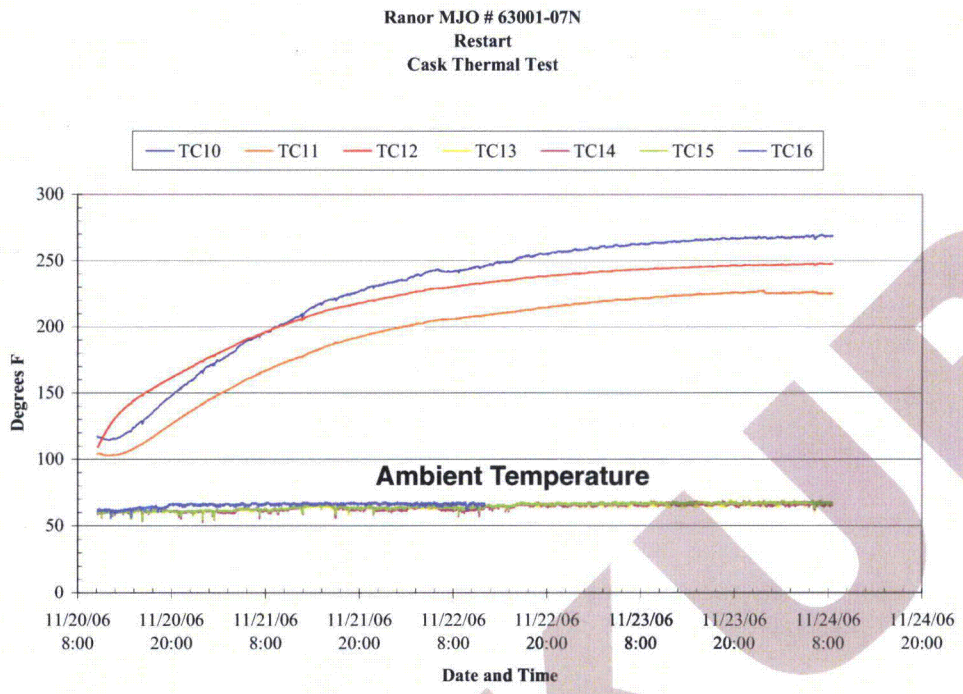

Figure 8-4. Temperature versus Time – Heat Cycle for Thermocouples 10 through 16

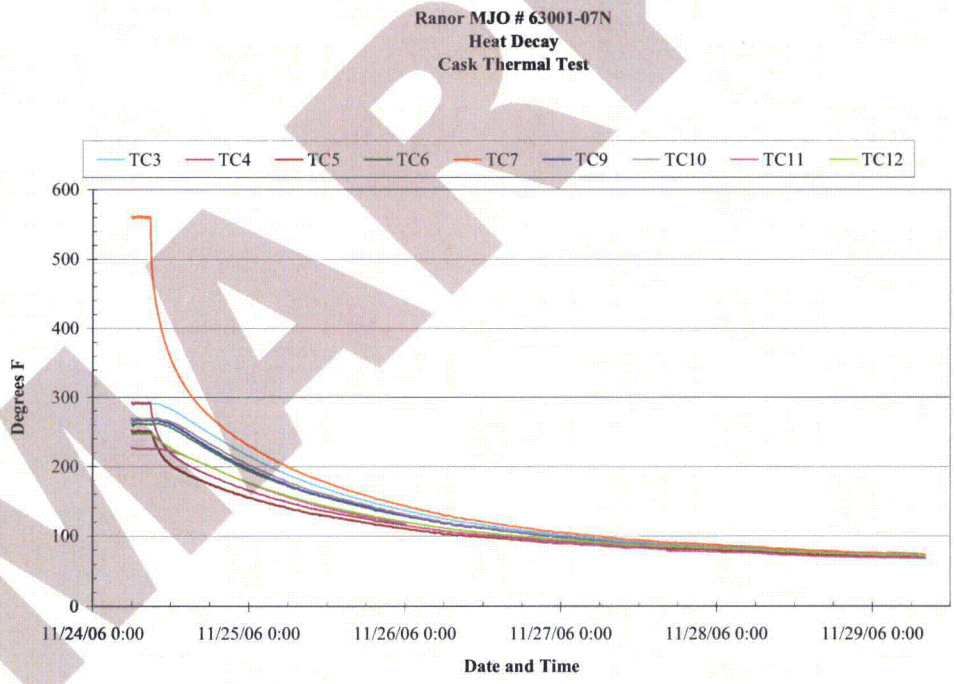

Figure 8-5. Temperature versus Time – Cooling Cycle for Thermocouples 3 through 12

MARKUP

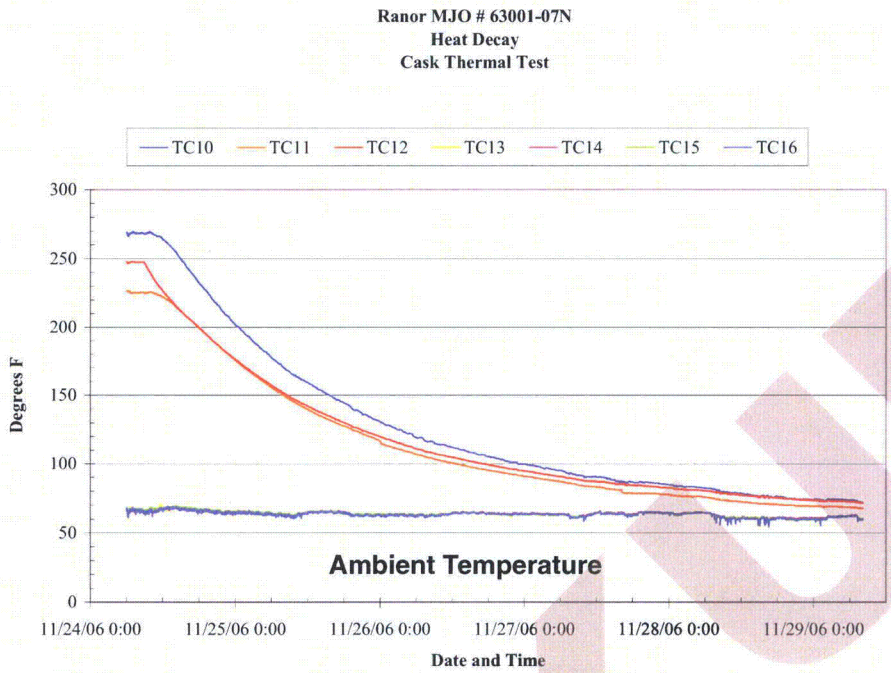

Figure 8-6. Temperature versus Time – Cooling Cycle for Thermocouples 10 through 16

MARKUP

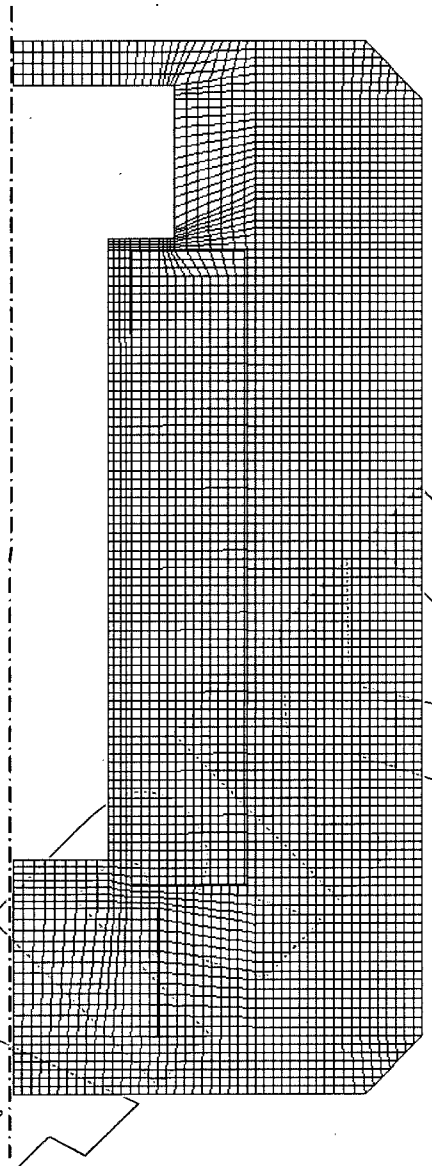

Figure 8-7. Verification Analysis – Axisymmetric (2D) Model of Test Cask

MAKEUP

Boundary Conditions during Test Heat Up

A constant heat load of 7,000W (23,891 BTU/hr) is applied during the heat up phase. The applied heat flux for each surface is:

Surface	Heat flux (BTU/hr-in^2)
1	9.0
2	4.5
3	37.8
4	1.3
5	11.0
6	7.5

The outer convective surface has properties that are assumed to be constant during the heat up portion of the test:

Surface	Convective Property (BTU/hr-in^2-F)
1	0.0025
2	0.0060
3	0.0100
4	0.0135
5	0.0130
6	0.0130
7	0.0345

Ambient temperature is 17.78°C (64°F).
Initial cask temperatures are set to 45.56°C (114°F).

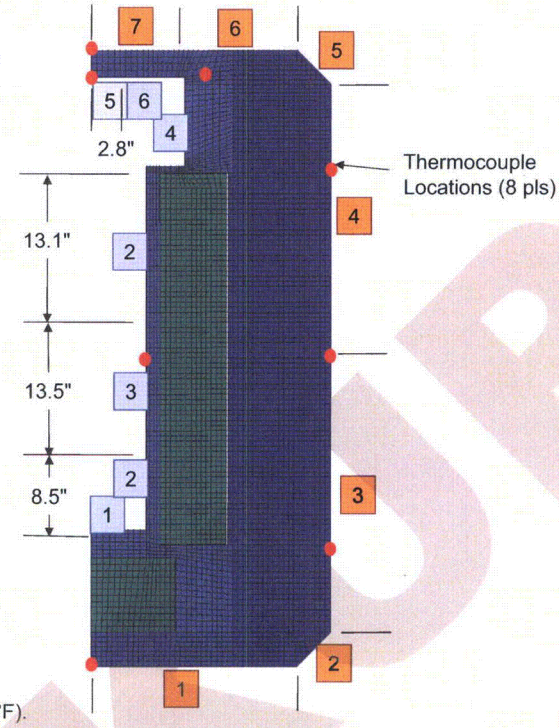

Figure 8-8. Verification Analysis – Heat Cycle Boundary Conditions

Boundary Conditions during Test Cool Down

The heat load of 7,000W (23,891 BTU/hr) is removed during the cool down phase.

The outer convective surface has properties that are assumed to be constant during the cool down portion of the test:

Surface	Convective Property (BTU/hr-in^2-F)
1	0.0025
2	0.0060
3	0.0100
4	0.0100
5	0.0100
6	0.0100
7	0.0200

Ambient temperature is 17.78°C (64°F).

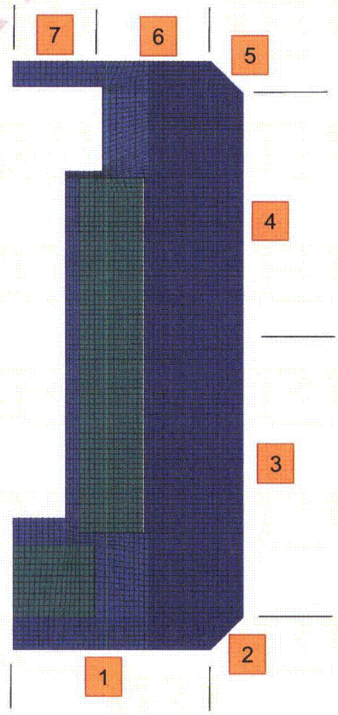

Figure 8-9. Verification Analysis – Cooling Cycle Boundary Conditions

MARKUP

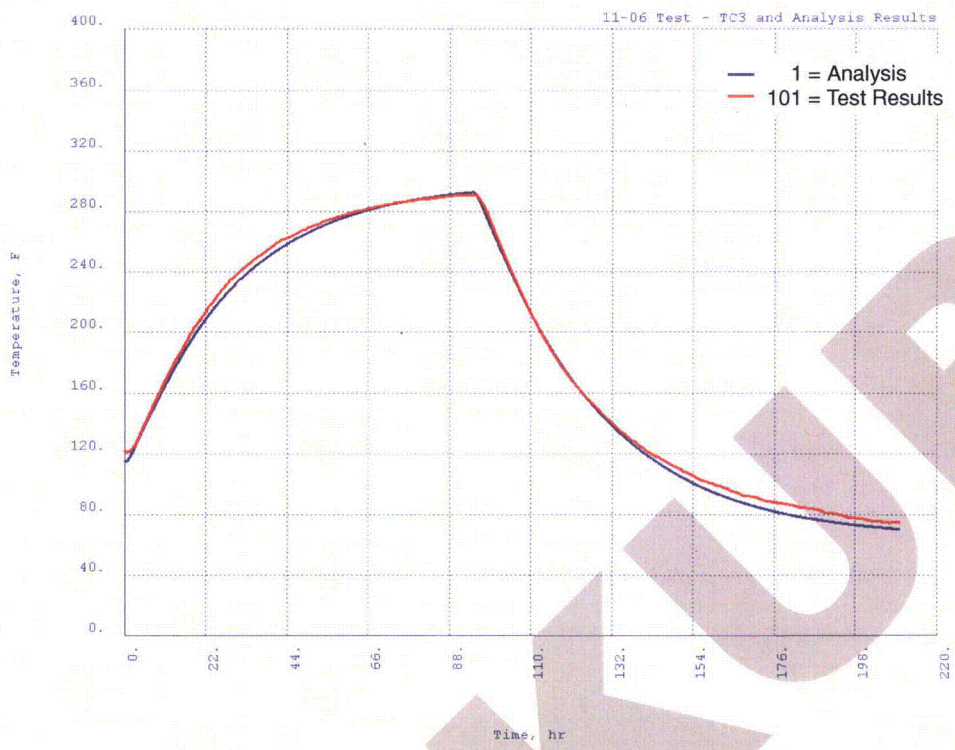

Figure 8-10. Comparison Test Data versus Analytical Results – Center, Cask Bottom

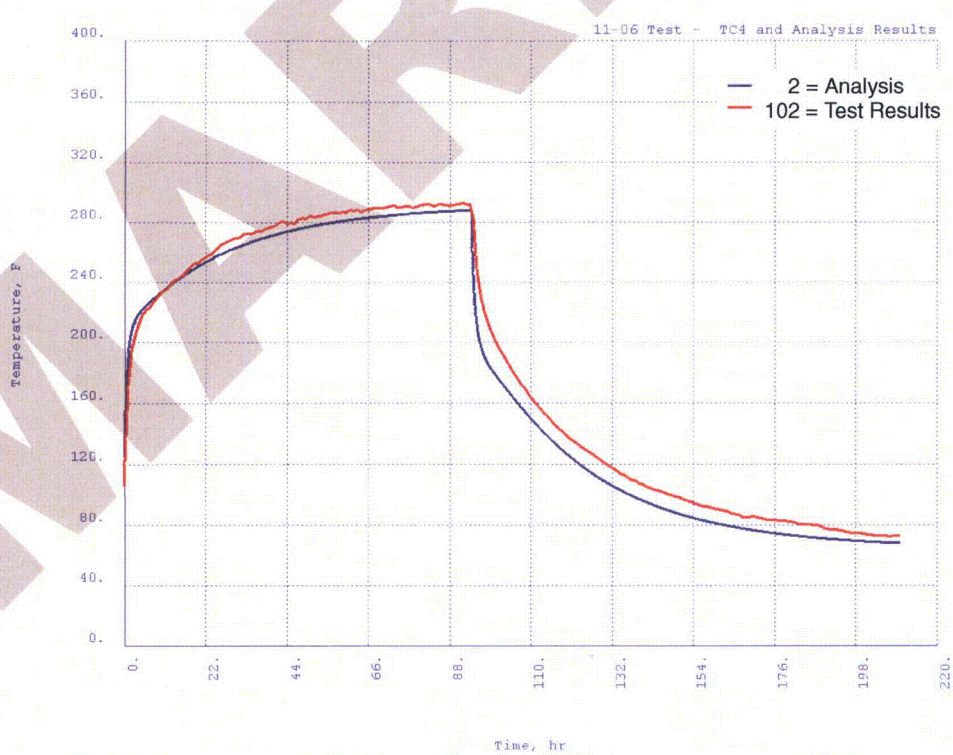

Figure 8-11. Comparison Test Data versus Analytical Results – Center, Inside Lid Surface

MARKUP

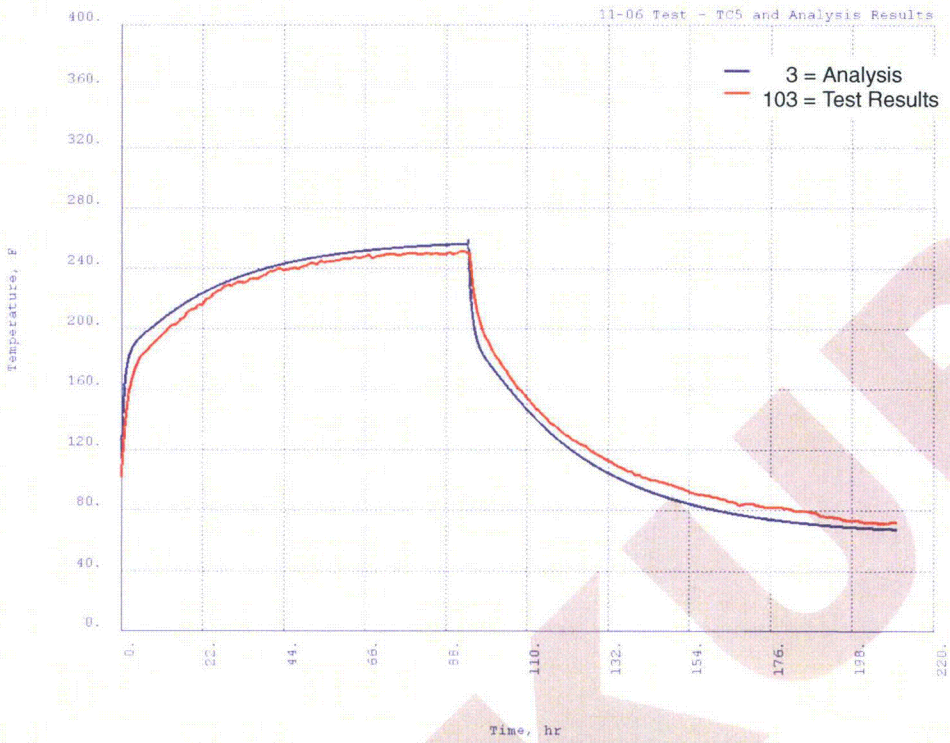

Figure 8-12. Comparison Test Data versus Analytical Results – Center, Outside Lid Surface

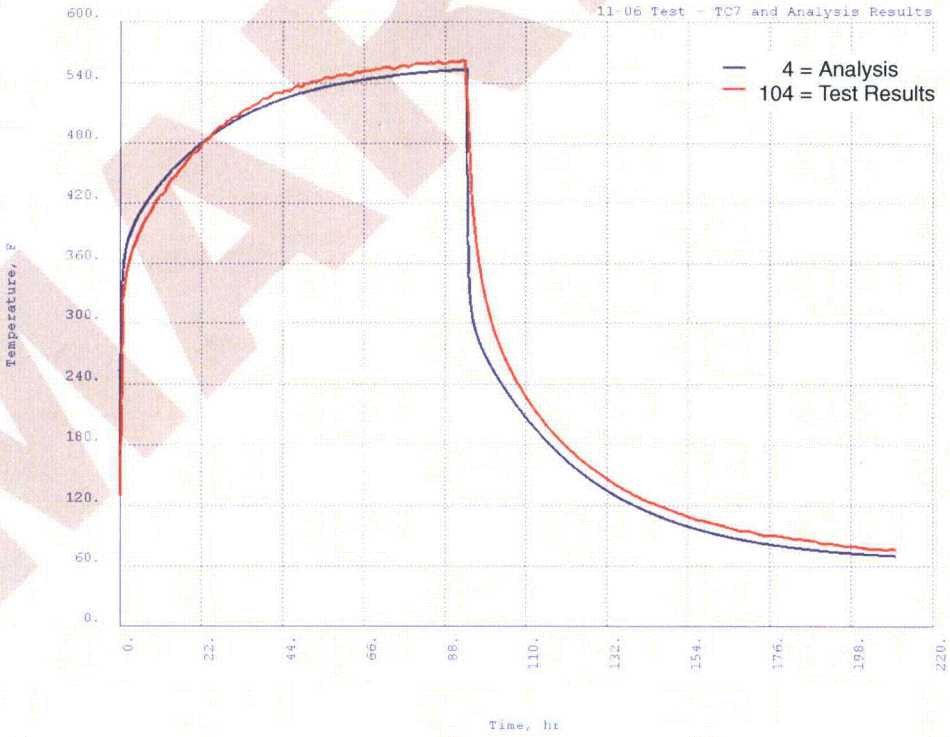

Figure 8-13. Comparison Test Data versus Analytical Results – Middle, Cavity Wall

MARKUP

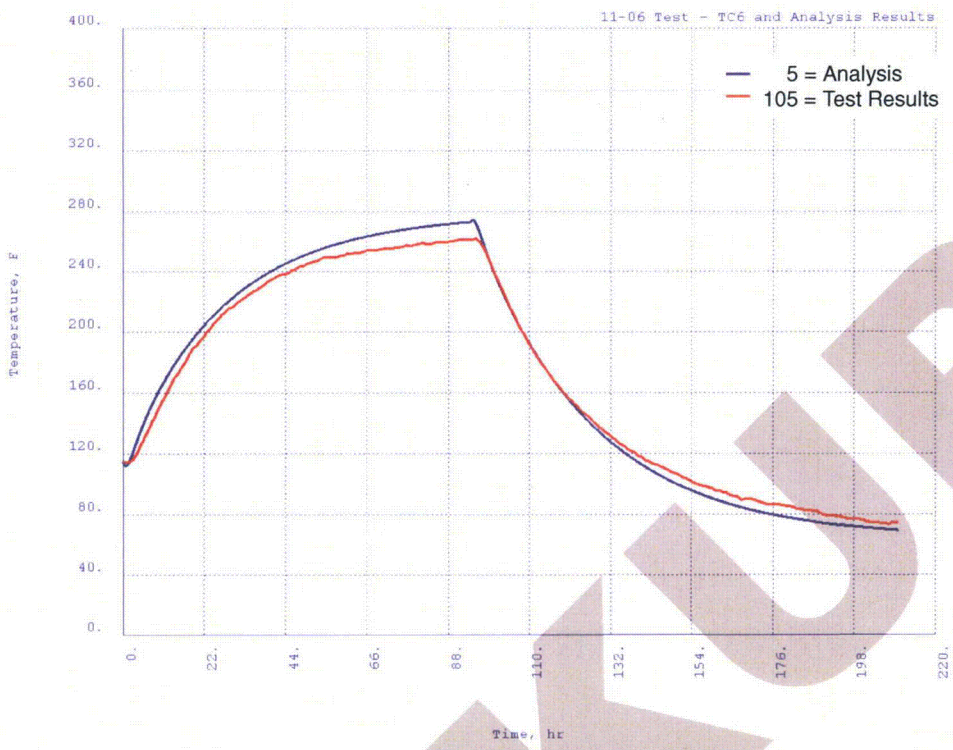

Figure 8-14. Comparison Test Data versus Analytical Results – Middle, Outside Wall

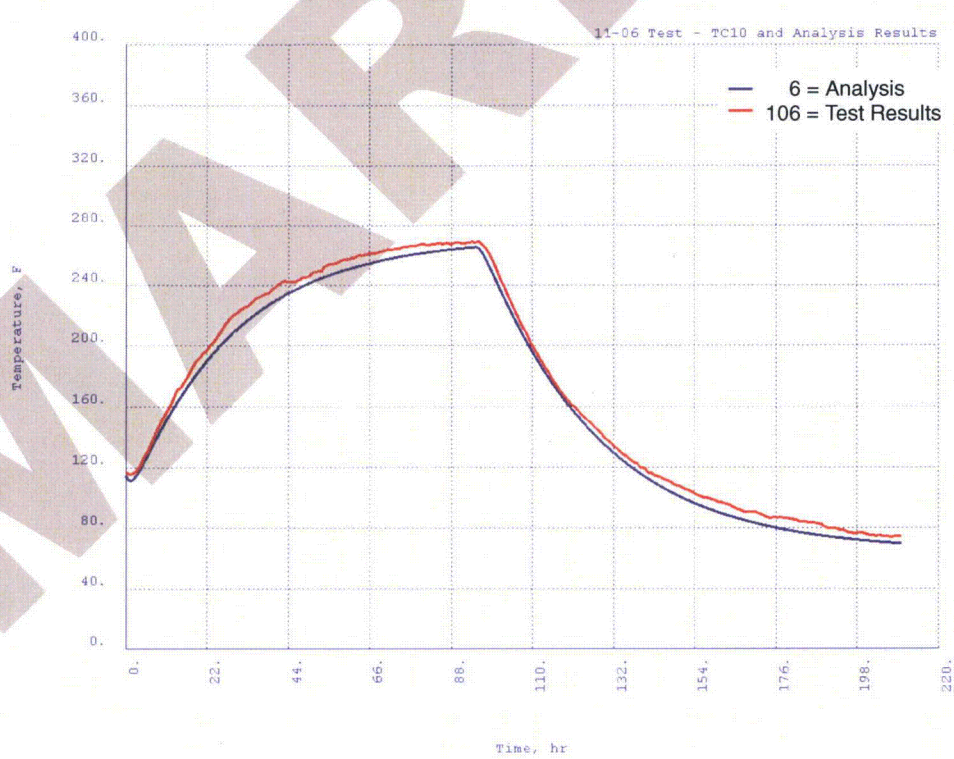

Figure 8-15. Comparison Test Data versus Analytical Results – Drain Port Area

MARKUP

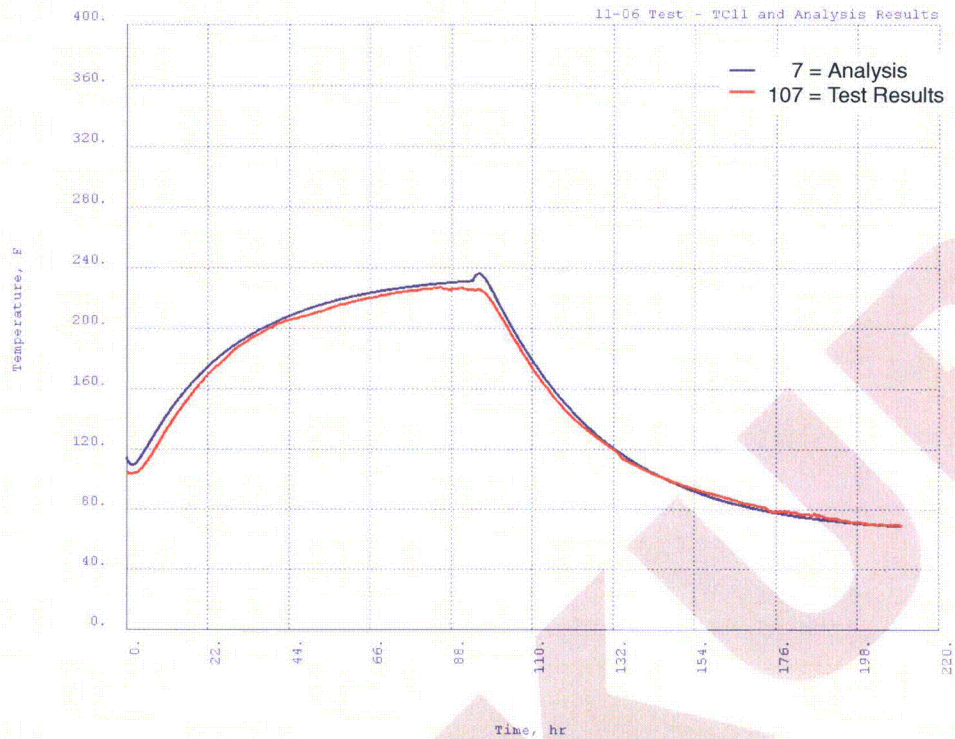

Figure 8-16. Comparison Test Data versus Analytical Results – Vent Port Area

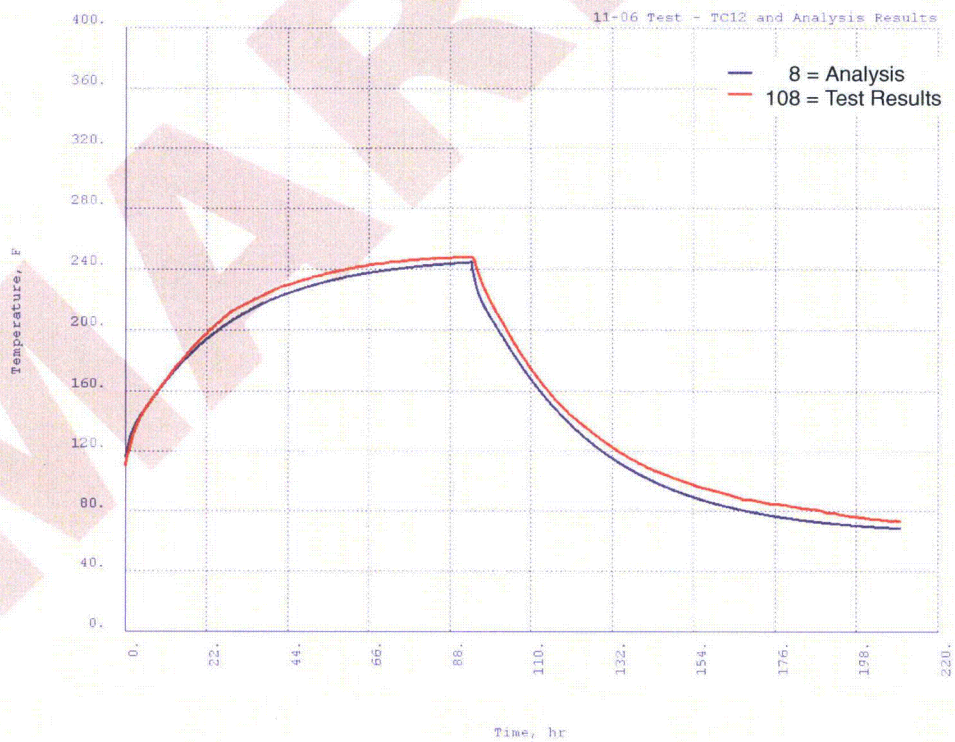

Figure 8-17. Comparison Test Data versus Analytical Results – Seal Test Port Area

MARKUP

8.1.8 Impact (Free-Drop) Tests

The Impact (Free-Drop) test is performed to obtain data to demonstrate the adequacy of analytical methods used for qualifying the transport packages, both at the size tested and scaled-down versions. The Model AOS-165A transport package was selected for this test because it is the largest package, in terms of size and weight. These analytical methods are used to show that the impact limiters are capable of limiting impact loads on the payload to an acceptable level.

Appendix 8.3.2, "Impact (Free-Drop) Test Report," presents the Free-Drop Test report. Appendix 8.3.3, "Dimensional Inspection Report – Model AOS-165A," presents the Dimensional Inspection report of the impact limiter and cask components, taken throughout the Free-Drop test.

8.1.8.1 Test Setup Discussion

A 9-m (30-ft.) Drop Test is conducted on a full-scale model of the Model AOS-165 transport package. The test article weighs approximately 18,144 kg (40,000 lbs.). Three (3) free drops, each with the package at a different orientation, are conducted as part of the test:

- **End (Head-On orientation)** – Package axis is vertically oriented
- **Side (Side orientation)** – Package axis is horizontally oriented
- **Cg/Corner** – Package axis is oriented at a pre-determined angle with the impact plane

Figure 8-18 illustrates the three (3) free drop orientations and test setup. The test sequence listed above can be changed during the performance of the tests. High-speed cameras from two (2) orthogonal directions were used to document the orientation prior to each drop.

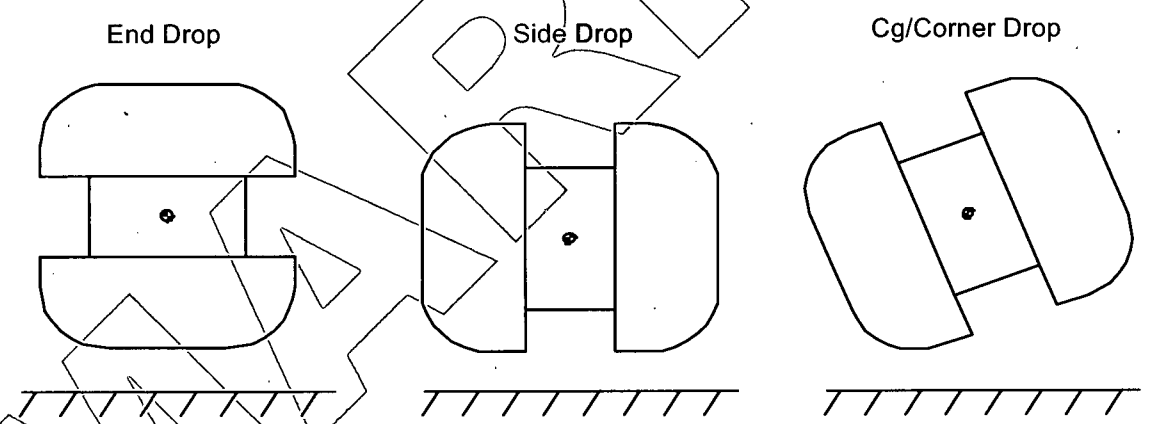

Figure 8-18. End, Side, and Cg/Corner Free-Drop Orientations – All Models

MARKUP

Acceleration time history data is recorded during the test, using accelerometers located inside the cask and on the impact limiter. A total of 10 sensors are used. One triaxial accelerometer is mounted on the impact limiter, at a location determined by CSA Engineering, Inc. (the company contracted to conduct the test). Two triaxial accelerometers are mounted inside the payload cavity, one on each end of the dummy mass. Each triaxial accelerometer senses in the radial, tangential, and axial directions. The tenth sensor is a uniaxial accelerometer sensing in the vertical direction for the Cg/corner drop.

The impact force distribution on the cask surface is estimated using a pressure-sensing film applied prior to each drop and removed immediately afterward. The film is used on the top and curved surfaces of the cask, enclosed by the impact limiters.

In addition, a series of dimensional inspections of the cask and impact limiter are performed before and after each drop, to establish the drop's resulting deformation pattern.

A portable 90-ton hydraulic crane is used to position the package at the proper height of 9m (30 ft.) or greater, above the impact surface. To prevent crane boom backlash after the load is released, the crane hook must be connected to two (2) dead weights by wire rope slings. This maintains the load on the crane after the package is released. (Refer to Figure 8-19.)

A quick-release (air-actuated, pneumatic) mechanism is used to release the package and allow it to fall freely. The mechanism is attached to the crane hook and package holding gear [3.7-m (12-ft.) wire rope sling]. The only connections to the package during the drop are the light instrumentation cables. The cables are arranged so that they do not interfere with the free-fall path of the package. Attached to the slings is a 3-gallon air accumulator tank and fast-acting, electrically triggered diaphragm valve mounted close to the quick-release mechanism.

Drop height is determined by means of a light, graduated chain or measuring tape, hanging from the lowest point of the package to the ground. After the drop height is verified, the graduated chain or measuring tape is removed prior to the drop.

MARKUP

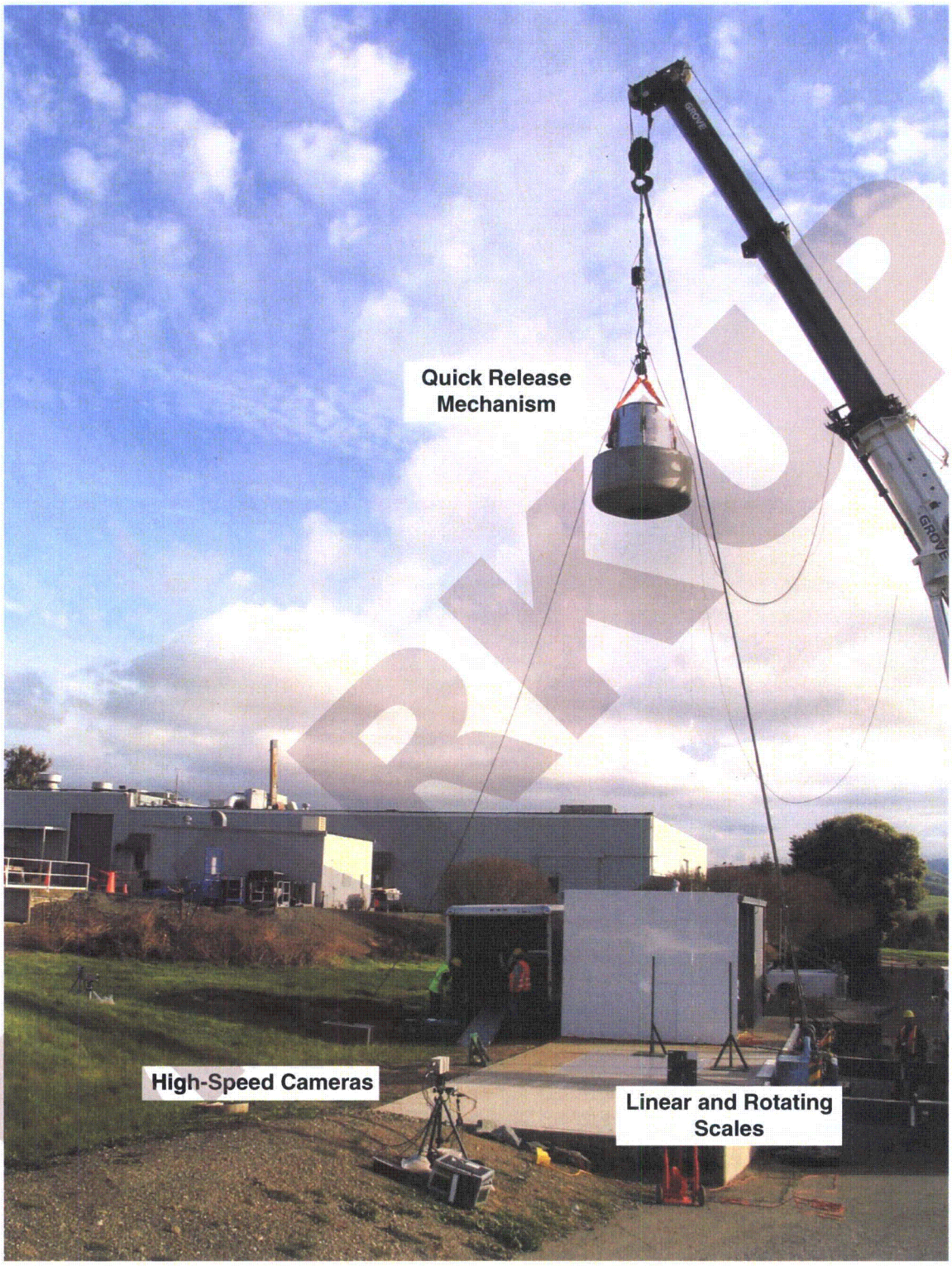

Figure 8-19. Test Setup (Head-On Orientation Shown) – Model AOS-165

8.1.8.2 Test Procedure

Appendix 8.3.2, "Impact (Free-Drop) Test Report," presents a detailed description of the test procedure.

8.1.8.3 Acceptance Criteria

The primary pass-fail criterion for the test is based upon a leak rate test, performed upon the transport package's cask component before and after the drop tests. Subsection 8.1.4 details the leak test methodology. An acceptable leak rate is less than 2.96 * 10E-7 standard cubic centimeters of helium per second, at a differential pressure of 1 atmosphere.

Note: *For the transport package to be judged acceptable, the measured leak rate must be less than this amount, both before and after the drop tests.*

The secondary criterion relates to external transport package dimensions. These must not have changed by any amount that would prevent or endanger the transport package's performance of its primary functions – containment and shielding. Appendix 8.3.3, "Dimensional Inspection Report – Model AOS-165A," presents a Dimensional Inspection report.

A discussion of the analytical procedure, as it relates to the test results, is provided in Subsection 2.7.1, "Free Drop."

MARKUP

8.2 MAINTENANCE PROGRAM

The cask maintenance program is described in detail in an Engineering Specification provided to all AOS Transport Packaging System users. This Specification is developed to implement the requirements established in this chapter. Packaging System operators can develop procedures of their own, to include site-specific requirements, if they stay within the Engineering Specification requirements.

Routine inspections are performed prior to each shipment. These inspections include visual checks of the packaging and any support structure(s) or device(s) required to properly assemble the transport package. They also include pressurization of the cask cavity, which is part of the leak check. Additionally, more-detailed inspections are performed once a year, or prior to being used after a storage period of more than one (1) year, as detailed in Paragraph 8.2.1.2.

8.2.1 Structural and Pressure Tests

8.2.1.1 Routine Inspection

Prior to each shipment, the packaging – especially the bolt holes, vent ports, and sealing surfaces – is inspected for physical damage. The lid bolts, port plugs, O-Rings, and lid gasket are visually inspected for proper dimensions and identification. As part of the leak check, the cask cavity is pressurized to 1 atmosphere above the background pressure of the cavity.

Any support structure(s) or device(s) (liner, fuel divider, rack, and so forth) used with the packaging are also visually inspected for signs of damage, wear, cracked welds, deformation, and other defects.

MARKUP

8.2.1.2 Routine and Periodic Inspections

The following transport package inspections must be performed once a year, or prior to the transport package being used after a storage period of more than one (1) year. Any maintenance work required is identified on a maintenance checksheet. (Appendix 8.3.4, "Maintenance Checksheet Sample," provides a sample copy of the checksheet.)

a. Impact limiter

The impact limiter is inspected for:

1. Signs of excessive temperature.
2. Punctures, holes, or other surface defects.
3. Crushed sides or ends, indicating a drop or severe impact.
4. Defects resulting from normal or abnormal wear.
5. Compression or damage to the foam material.
6. Cracks or other damage to welds.
7. Proper identification and damage to the turnbuckles.

b. Cask

The cask is inspected for:

1. Wear, corrosion, or damage to the drain, vent, and test port plugs, caps, and O-Rings.
2. Damage to sealing surfaces on the cask and lid.
3. Damage or cracks to load-bearing welds.
4. Proper identification or damage to the lid and trunnion bolts.
5. Signs of excessive temperature.

MARKUP

8.2.2 Leak Tests

Prior to leak testing, the seal, sealing surfaces, lid bolts, and seal attachment screws must be inspected for damage such as scratches, dents, dirt, and oil residue. Also, the female thread holes for the lid bolt and seal attachment screws must be checked. After completing the inspection, and repairing or replacing any damaged components, the seal is installed on the lid groove by the four seal attachment screws, as illustrated in Figure 8-20.

Note: *A callout for the hole used for testing is included in Figure 8-20, to differentiate it from the screws in the photograph.*

Figure 8-20. Lid Seal – Attachment by way of Four Screws, and Testing Hole

Note: Repairs and/or replacements require prior AOS notification and approval.

a. Routine Leak Testing

Leak testing of the cask closure seal and vent and drain threaded pipe plugs is performed with a helium detection instrument when transporting "normal" form materials. Pressurize the cask cavity to 15 psig with helium, "sniff" the seal joints with the instrument to determine the presence of helium, then perform the test. The instrument must be calibrated to a sensitivity of $1 * 10^{-5}$ atm cm^3/sec (helium) or greater. If leakage greater than $1 * 10^{-3}$ atm cm^3/sec is detected, repair or replace the suspect component(s), then retest for leakage.

b. Periodic Leak Testing

Once a year, or prior to the transport package being used after a storage period of more than one (1) year, the cask closure seal and vent and drain threaded pipe plugs must be leak-checked with a helium Mass Spectrometer Leak Detector (MSLD). This instrument has a sensitivity of $< 1 * 10^{-9}$ atm cm^3/sec (helium). Perform this test by pressurizing the cask cavity to 15 psig, then use the MSLD to test the seal joints for leaks. If leakage greater than $1 * 10^{-7}$ atm cm^3/sec is detected, repair or replace the suspect component(s), then retest for leakage.

MARKUP

8.2.3 Component and Material Tests

8.2.3.1 Subsystems Maintenance

There are no auxiliary cooling systems nor other subsystems that require maintenance.

8.2.3.2 Valves, Rupture Disks, and Gaskets on Containment Boundary

The design of the AOS Transportation Packaging System does not include any valves nor rupture disks, only the seals on the containment boundary or cask. The metallic closure seal is replaced at every usage. The elastomeric O-Rings on the three (3) port caps must be replaced when visual or leak test inspections identify them as defective, or during the periodic inspection, whichever comes first.

8.2.4 Shielding Tests

The shielding material is tungsten alloy or carbon steel. The initial tests for shielding material integrity during fabrication, and the required radiological surveys following each loading, ensure continued integrity.

If the survey results exceed regulatory requirements, the contents are reduced and/or a shielding liner is installed.

8.2.5 Thermal Tests

Thermal testing is performed only to benchmark the analytical model, using the first prototype. It is performed in this manner because the cask is constructed of tungsten alloy and 300 series stainless steel, and no thermal degradation can occur during Normal conditions of transport.

8.2.6 Miscellaneous Tests

No additional tests are performed on the AOS Transport Packaging System models other than those described herein.

MARKUP

8.3 APPENDIX

This appendix presents the following:

- Heat Test Report
- Impact (Free-Drop) Test Report
- Dimensional Inspection Report – Model AOS-165A
- Maintenance Checksheet Sample

MARKUP

THIS PAGE INTENTIONALLY LEFT BLANK.

MARKUP

8.3.1 Heat Test Report

MARKUP

Report No. TR63001-07N
Revision 0

Total number of pages =418

Testing performed by:
National Technical Systems
533 Main Street
Acton, MA 01720

Testing performed for:
RANOR, Inc.
1 Bella Drive
Westminster, MA 01473

WORKUP

TEST REPORT
for
THERMAL CONDUCTIVITY TESTING
on
AOS-165 CASK ASSEMBLY

Purchase Order No. 108533

Prepared by: Charles R. Pilotte **Date:** 12DEC06
Charles R. Pilotte, Program Manager
NTS Products Group

Reviewed and Approved by: Keith D. Whittles **Date:** 12 December 2006
Independent Reviewer
NTS Products Group

Reviewed and Approved by: Sean R. E. Sery **Date:** 12/12/06
Quality Management Representative
NTS Products Group

G:\Mjo Information\63001 RANOR, INC\Publications\Reports\TR63001-07N_Ranor.doc

TABLE OF CONTENTS

SECTION		PAGE NOS
	ABSTRACT	ii
1.0	INTRODUCTION AND SCOPE	1-1
2.0	APPLICABLE REFERENCE DOCUMENTS	2-1
3.0	ITEM DESCRIPTION	3-1
4.0	TEST SET-UP AND SEQUENCE	4-1 to 4-9
5.0	TEST EQUIPMENT	5-1 to 5-3
APPENDIX A: HEAT RISE 1ST RUN TABULATED DATA		A-1 to A-111
APPENDIX B: HEAT RISE RERUN TABULATED DATA		B-1 to B-99
APPENDIX C: HEAT DECAYRUN TABULATED DATA		C-1 to C-128
APPENDIX D: HEAT RISE 1ST RUN DATA CHARTS		D-1 to D-20
APPENDIX E: HEAT RISE RERUN DATA CHART		E-1 to E-20
APPENDIX F: HEAT DECAY DATA CHARTS		F-1 to F-20
APPENDIX G: NOTICE OF DEVIATION 001		G-1 to G-2

MARKUP

ABSTRACT

The report contained herein provides details on the testing that was performed on the AOS-165 cask assembly. The intent of the program was to gather test data on the behavior of the cask pertaining to heat load loss versus time. The internal surfaces and external surfaces of the cask had type J thermocouples spot welded at designated locations and interfaced with a data acquisition system. In addition, a heater externally controlled by a DC power supply was inserted within the cask to provide for a constant 7,000 watt load ± 70. Voltage and current going to the heater was recorded at the same interval as the thermocouple data. The interval of recording was set to once every minute. The heater wattage was calculated by the data logger multiplying the applied volts DC by the current being drawn.

Starting at room temperature conditions a constant 7,000 watt heat load was applied and the cask allowed sufficient time to stabilize in regards to the temperature gradient. Once stabilization was achieved, the heat load was removed and the temperatures of the cask allowed to decay back to ambient temperatures. Heat stabilization runs had to be performed twice as a result of the data logger not running during the first heat decay run attempt.

All data acquired is presented within this report, both in tabular format and charts of temperature versus time

MARKUP

ABSTRACT

The report contained herein provides details on the testing that was performed on the AOS-165 cask assembly. The intent of the program was to gather test data on the behavior of the cask pertaining to heat load loss versus time. The internal surfaces and external surfaces of the cask had type J thermocouples spot welded at designated locations and interfaced with a data acquisition system. In addition, a heater externally controlled by a DC power supply was inserted within the cask to provide for a constant 7,000 watt load ± 70. Voltage and current going to the heater was recorded at the same interval as the thermocouple data. The interval of recording was set to once every minute. The heater wattage was calculated by the data logger multiplying the applied volts DC by the current being drawn.

Starting at room temperature conditions a constant 7,000 watt heat load was applied and the cask allowed sufficient time to stabilize in regards to the temperature gradient. Once stabilization was achieved, the heat load was removed and the temperatures of the cask allowed to decay back to ambient temperatures. Heat stabilization runs had to be performed twice as a result of the data logger not running during the first heat decay run attempt.

All data acquired is presented within this report, both in tabular format and charts of temperature versus time

MASTER FILE

1.0 INTRODUCTION AND SCOPE

The purpose of this test report is to present the methodology that was utilized in performance of heat transfer testing of the AOS-165 Cask Assembly as described in Section 3.0 of this report. The objective of the testing was to obtain transient and steady state temperature data with a known heat input for verifying conformance to thermal requirements and modeling of the cask.

The cask body detailed within Section 3.0 was made available at the fabricator's facility for the purpose of performing the thermal testing.

The fabricator RANOR Inc. provided the floor space and crane facilities to support the testing effort. National Technical System (NTS) personnel were allowed access to the fabricator's facility to survey the site and for performance of the thermal testing. The facility made available 480VAC, 3 phase power for interfacing with NTS power controls. Section 4.0 of this report describes in detail the procedure that was used during the test. NTS was responsible for providing the following activities.

- 16 type J thermocouples including mounting.
- Variable regulated power source for operation of heater.
- Data acquisition system for recording thermocouples and power characteristics to the heater.

All work conducted was accordance with NTS Corporate Quality Policy Manual Revision 4 dated 21 March, 2006. This program fulfills the requirements of 10CFR50, Appendix B, and 10CFR, Part 21.

MARKUP

2.0 APPLICABLE REFERENCE DOCUMENTS

2.1 NTS Corporate Quality Policy Manual Revision 4, dated 21 March, 2006.

2.2 NTS Quotation No. A-0606-1991-1 dated 29 June, 2006.

2.3 RANOR Inc. purchase order 108533 dated 23 August, 2006.

2.4 GE Nuclear Specification Number 2249423 Rev 0, "AOS Cask Thermal Acceptance Test"

2.5 NTS Test Procedure TP63001-07N Revision 0 reviewed and approved by RANOR on 3 November, 2006.

2.6 NTS Standard Operating Procedure SOP NOR-CAL 19, Revision 0, "Calibration Verification Procedure for Thermocouples using Dry Well Temperature Calibrators"

MARKUP

3.0 ITEM DESCRIPTION

The test item is an"AOS-165 Cask Assembly". The cask tested under this program was manufactured by RANOR, Inc located in Westminster, MA. The original set-up was intended to be as shown in Figure 1. The actual configuration used is shown in Figure 2.

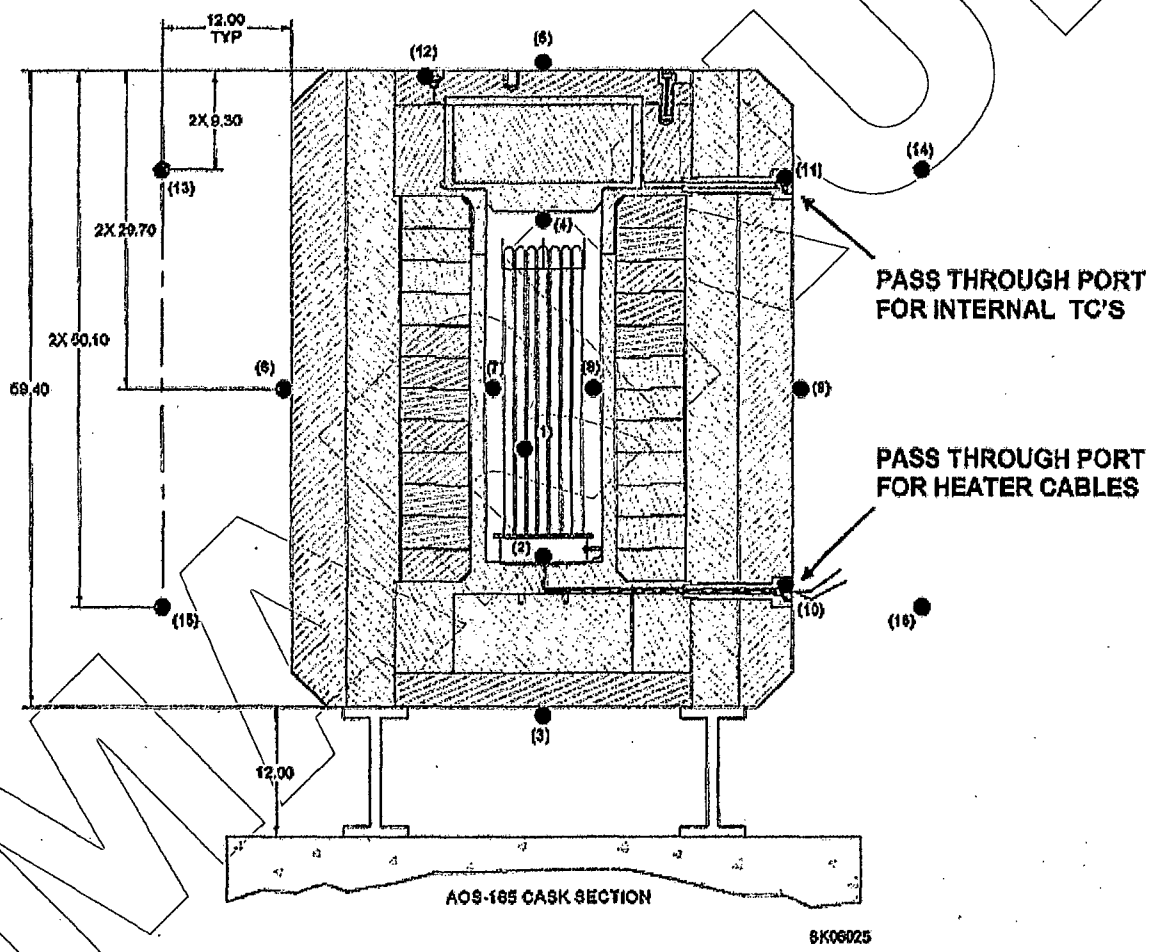

Figure 1

MS UP

3.0 ITEM DESCRIPTION (continued)

In performing the set-up the hole at the bottom of the cask was too small to allow for routing of power cables to the heater. As a result per request by GE Nuclear personnel on site the installation of the heater was in its normal orientation and the power cables brought out through the upper side wall hole. Also, the clearance between the top plug insert and the cask was insufficient to allow for cables so per decision by GE Nuclear personnel the plug insert was not used.

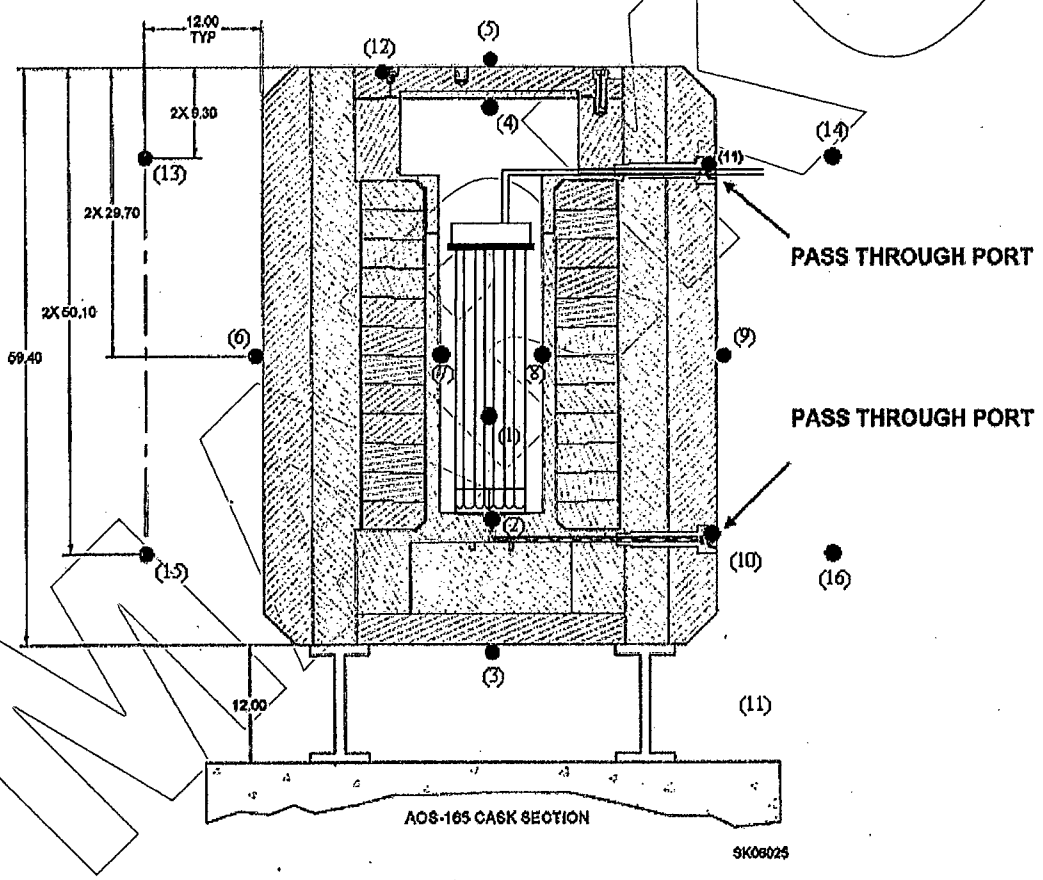

Figure 2

4.0 TEST SET-UP AND SEQUENCE

4.1 Photographs

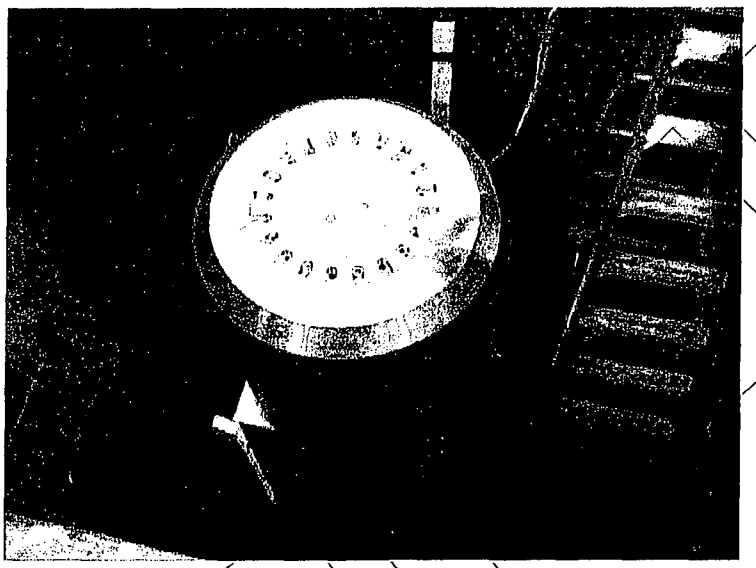

Cask located down onto pit area

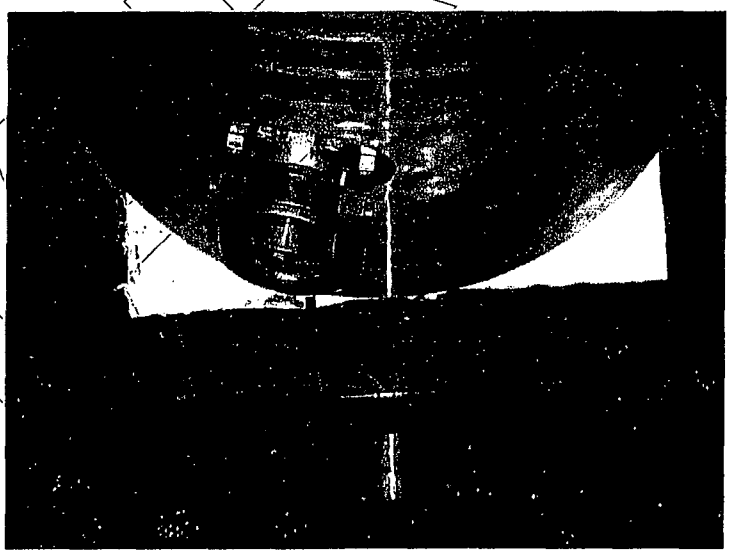

Cask sitting on fiber wool insulation

4.0 TEST SET-UP AND SEQUENCE (continued)

4.1 Photographs

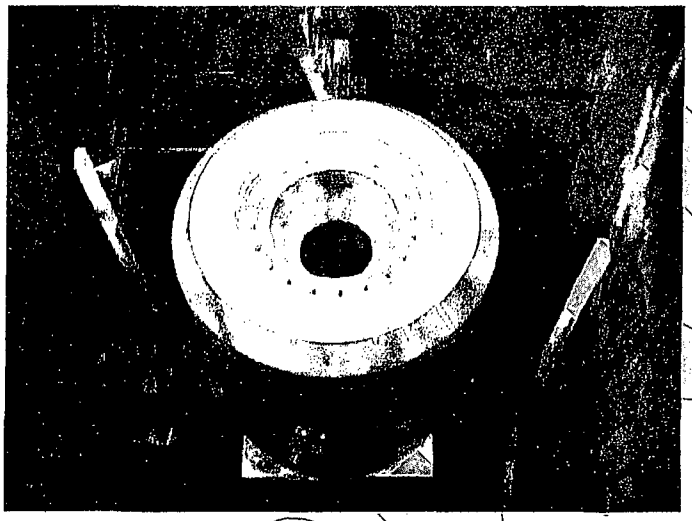

Wooden stands placed on either side of cask for locating ambient thermocouples 13, 14, 15 & 16

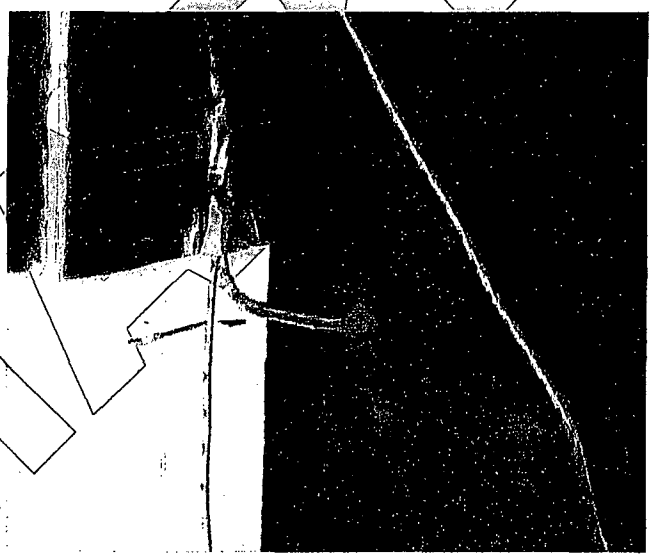

Close-up mounting of ambient thermocouples. Tip placed 12 inches from cask wall.

4.0 TEST SET-UP AND SEQUENCE (continued)

4.1 Photographs

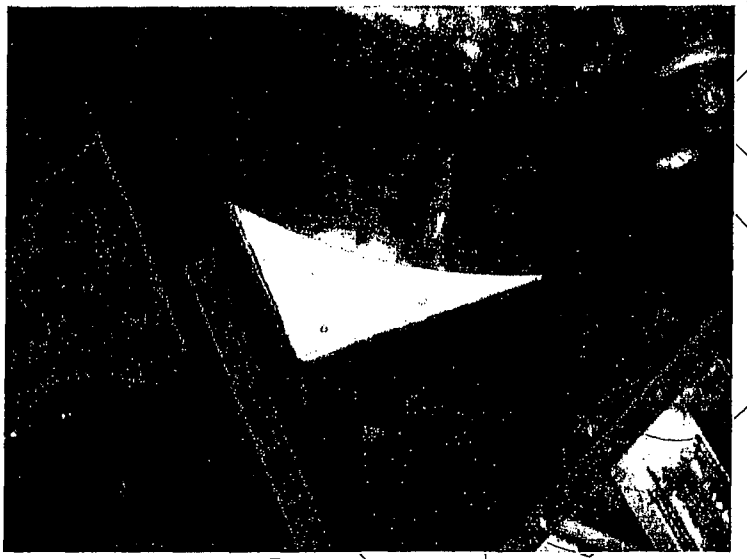

Insulation pads between bottom of cask and I Beam support stands

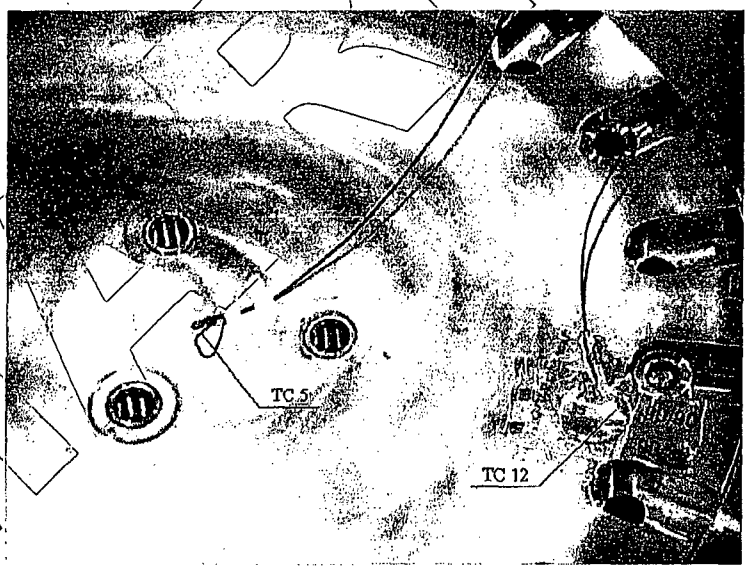

Thermocouples TC 5 and TC 12 on top of cask cover. TC 4 located on underside of cover and centered.

MASTER COPY

4.0 TEST SET-UP AND SEQUENCE (continued)

4.1 Photographs

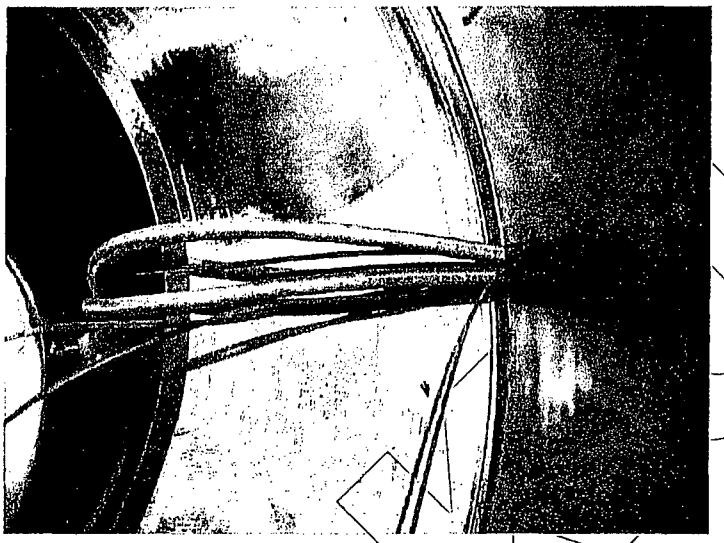

Wire feed through at top end of cask

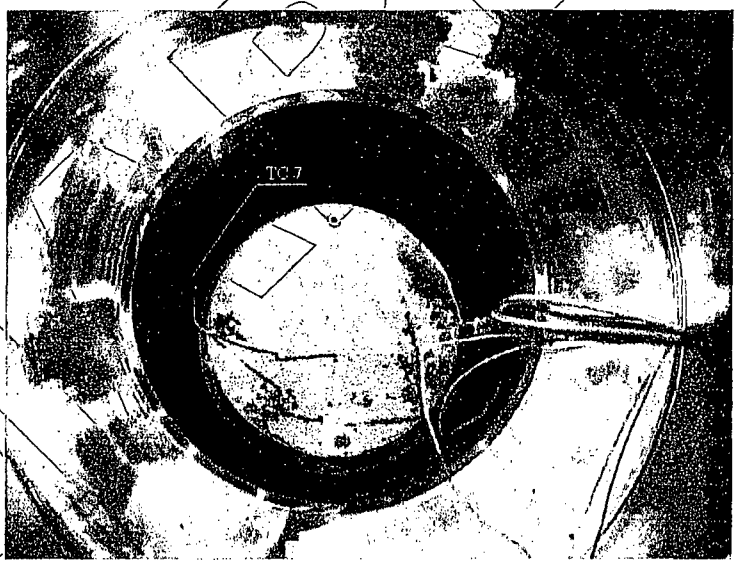

Heater placed down inside of cask well. TC# 7 located 29.75 inches down from top of cask. TC#8 located 180 degrees around cask.

MEDIUM UP

4.0 TEST SET-UP AND SEQUENCE (continued)

4.1 Photographs

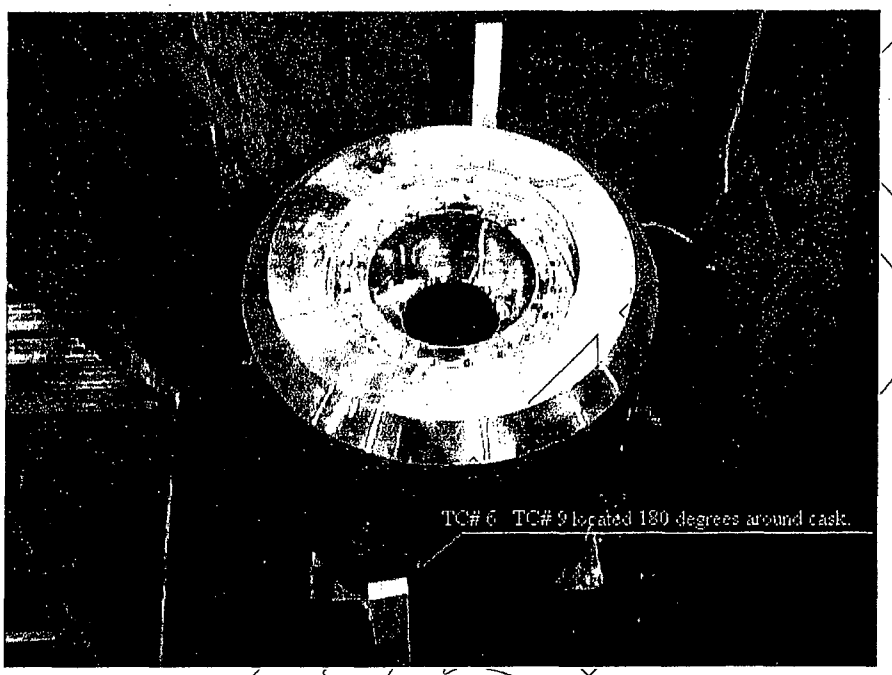

TC# 7 location 29.75 inches down from top of cask.

4.2 Thermocouples

A total of 16 type J thermocouples were used made from "Special Limits of Error" type J thermocouple wire. The wire has double insulation glass fiber coating and is 24 solid AWG. Each thermocouple had a lead length of approximately 30 feet. One end of each wire was beaded (welded) and each TC wire was calibrated at NTS prior to installation. Placement of the thermocouples was per Figure 2.

MAINTOP

4.0 TEST SET-UP AND SEQUENCE (continued)

4.3 Cask Placement and Thermocouple Installation

The cask was set in a pit at the RANOR Inc. facility. The pit provided for some protection against direct ambient air drafts.

All thermocouples measuring the cask were welded onto the cask. The location for thermocouples # 11 and 12 located at the entry of the top and bottom pass through ports had the ports stuffed with steel wool. This was done to provide a better medium for heat transfer within the through hole.

All thermocouple wires were terminated to a data acquisition system that acquired the data at 1 minute intervals throughout the duration of testing.

4.4 Heat Load

A heater capable of outputting a heat load of 7,000 watts was supplied by GE Nuclear, and located at the fabrication facility; and was placed internal to the cask. The heater was placed within the cask cavity to allow for the power lines to be fed out of the top through hole. The bottom through hole had a 90 degree bend which preventing the power cables from being snaked through. NTS provided a regulated DC voltage source such that the wattage being dissipated from the load remained at ± 70 watts from the desired value. The desired value was given as 7,000 watts.

MARKUP

4.0 TEST SET-UP AND SEQUENCE (continued)

4.4 Heat Load

The voltage supplied and current drawn by the heater was recorded at the same time and intervals as the thermocouple data. Watts was calculated as the product of volts times current via a math function within the data logger.

4.5 Load Testing

4.5.1 1st Heat Rise Test

Testing began at 20:08 on 13 November, 2006. A constant heat load of 7,000 ± 70 watts was applied to the cask until thermal stability was reached. Thermal stability was considered reached on 18 November, 2006 at 08:07 at which time the heat load was shut off to start the heat decay measurement.

On 20 November, 2006 when downloading data it was discovered that the data logger had been stopped on 18 November, 2006 at 08:07 and not restarted. This caused the heat decay test data to be lost. Notice of Deviation 001 was issued. A copy is provided within Appendix G of this report. As a result the heat load had to be reapplied to allow for the unit to restabilize.

The tabulated data gathered for this run is contained within **Appendix A pages A-2 through A-111.** Charts produced are contained within **Appendix D pages D-2 through D-20.** Thermocouple TC# 8 was showing erratic behavior and was verified to have a fractured junction when inspected upon completion of the test.

MARKUP

4.0 TEST SET-UP AND SEQUENCE (continued)

4.5 Load Testing

4.5.2 2nd Heat Rise Test

Retesting for heat rise began at 10:33 on 20 November, 2006. A constant heat load of 7,000 ± 70 watts was applied to the cask until thermal stability was reached. Thermal stability was considered reached on 24 November, 2006 at 08:32 at which time the heat load was shut off to start the heat decay measurement.

The tabulated data gathered for this run is contained within **Appendix B pages B-2 through B-99.** Charts produced are contained within **Appendix E pages E-2 through E-20.**

The following table depicts the final values achieved for each data channel for the two heat rise stabilization runs.

	TC1	TC2	TC3	TC4	TC5	TC6	TC7	TC8
1st Heat Run	1203.7 F	914.2 F	284.6 F	295.9 F	253.7 F	261.6 F	559.0 F	Lost data
2nd Heat Run	1199.1 F	902.1 F	290.6 F	291.7 F	250.7 F	260.9 F	559.7 F	Lost data

	TC9	TC10	TC11	TC12	TC13	TC14	TC15	TC16
1st Heat Run	264.6 F	261.4 F	232.2 F	252.2 F	61.8 F	59.2 F	62.8 F	59.1 F
2nd Heat Run	267.2 F	268.6 F	225.5 F	247.5 F	65.4 F	65.7 F	67.3 F	65.7 F

	Amps	Volts	Watts					
1st Heat Run	30.24	230.00	6955.20					
2nd Heat Run	30.23	230.20	6961.97					

MARKUP

4.0 TEST SET-UP AND SEQUENCE (continued)

4.6 Heat Decay Test

Heat Decay testing began at the moment the heaters were shut off which was on 24 November, 2006 at 08:32. Measurements continued until 08:10 on 29 November, 2006 at which time NTS was instructed by GE personnel to end the testing.

The tabulated data gathered for this run is contained within **Appendix C pages C-2 through C-128.** Charts produced are contained within **Appendix F pages F-2 through F-20.**

The following table depicts the final values achieved for each data channel for the two heat rise stabilization runs.

	TC1	TC2	TC3	TC4	TC5	TC6	TC7	TC8
Start 08:32 11/24/06	1199.1 F	902.1 F	290.6 F	291.7 F	250.7 F	260.9 F	559.7 F	Lost data
End 08:10 11/29/06	74.9 F	74.3 F	72.9 F	70.8 F	70.0 F	72.1 F	73.8 F	Lost data

	TC9	TC10	TC11	TC12	TC13	TC14	TC15	TC16
Start 08:32 11/24/06	267.2 F	268.6 F	225.5 F	247.5 F	65.4 F	65.7 F	67.3 F	65.7 F
End 08:10 11/29/06	72.0 F	71.9 F	68.0 F	71.7 F	60.6 F	60.4 F	60.2 F	59.8 F

	Amps	Volts	Watts					
Start 08:32 11/24/06	30.23	230.20	6961.97					
End 08:10 11/29/06	0.00	0.00	0.00					

MARKUP

5.0 TEST EQUIPMENT

All test equipment used for this program was checked prior to testing to assure that it was in calibration and that the parameters being measured were appropriate for the range on the measuring instrument.

Calibration is performed and checked on a routine basis in accordance with standards traceable to the National Institute of Standards and Technology (NIST). Calibration of equipment is performed in accordance with the NTS quality program.

A list of test equipment used and verification of the suitability of the measuring instrument is included on the following pages.

MARKUP

12/06/06

National Technical Systems - Equipment List
RANOR, INC

NTS Job No: 63001

Shortcut#	Old Invent #	Description/Manufacturer	Model #/Serial #	Range/Accuracy	Frq/Due Dt	Calibration Status
AC0083	ML559	CURRENT SHUNT GENERAL ELECTRIC	50-140-034 100A/100M		000012 11/10/07	CAL
AC0093	ML574	DIGITAL MULTIMETER FLUKE	8840A 4382012	0 TO 1000 VDC SEE MFGR ftS SPEC	000006 2/28/07	CAL
AC0490	ZR320	DECADE RESISTOR IET	HARS-X-7-0.01 B2-892808212	.01 TO 10 KOHM +/-1%	000000 NCR	NCR
AC0495	ZR321	DECADE RESISTOR IET	HARS-X-7-0.01 B3-892808112	.01 TO 10 KOHMS,7 DECADES +/-(.01%+2mOHMS)	000000 NCR	NCR
AC1901	AC1901	30 CHANNEL RECORDER YOKOGAWA	DX230-2 954513	0-20V,RTD:PT100 0.1%RDG+2	000012 1/20/07	CAL
AC2029	AC2029	TYPE J THERMOCOUPLE WIRE 30 ft NTS	TYPE J	0 TO 1300 F +/- 2 F	000000	CAL
AC2030	AC2030	TYPE J THERMOCOUPLE WIRE 30 ft NTS	TYPE J	0 TO 1300 F +/- 2 F	11/10/07	CAL
AC2031	AC2031	TYPE J THERMOCOUPLE WIRE 30 ft NTS	TYPE J	0 TO 1300 F +/- 2 F	11/10/07	CAL
AC2032	AC2032	TYPE J THERMOCOUPLE WIRE 30 ft NTS	TYPE J	0 TO 1300 F +/- 2 F	11/10/07	CAL
AC2034	AC2034	TYPE J THERMOCOUPLE WIRE 30 ft NTS	TYPE J	0 TO 1300 F +/- 2 F	11/10/07	CAL
AC2035	AC2035	TYPE J THERMOCOUPLE WIRE 30 ft NTS	TYPE J	0 TO 1300 F +/- 2 F	11/10/07	CAL
AC2036	AC2036	TYPE J THERMOCOUPLE WIRE 30 ft NTS	TYPE J	0 TO 1300 F +/- 2 F	11/10/07	CAL
AC2037	AC2036	TYPE J THERMOCOUPLE WIRE 30 ft NTS	TYPE J	0 TO 1300 F +/- 2 F	11/10/07	CAL
AC2038	AC2038	TYPE J THERMOCOUPLE WIRE 30 ft NTS	TYPE J	0 TO 1300 F +/- 2 F	11/10/07	CAL
AC2039	AC2039	TYPE J THERMOCOUPLE WIRE 30 ft NTS	TYPE J	0 TO 1300 F +/- 2 F	11/10/07	CAL
AC2040	AC2040	TYPE J THERMOCOUPLE WIRE 30 ft NTS	TYPE J	0 TO 1300 F +/- 2 F	11/10/07	CAL

Calibration Abbreviations
UWCE - use with calibrated equipment
CBU - calibrate before use
NQM - not used for quantitative measurement
CAL - calibrated
NCR - no calibration required

PRELIMINARY DRAFT UP

12/06/06

National Technical Systems - Equipment List
RANOR, INC

NTS Job No: 63001

Shortcut#	Old Invent #	Description/Manufacturer	Model #/Serial #	Range/Accuracy	Frq/Due Dt	Calibration Status
AC2041	AC2041	TYPE J THERMOCOUPLE WIRE 30 ft NTS	TYPE J	0 TO 1300 F +/- 2 F	11/10/07	CAL
AC2042	AC2042	TYPE J THERMOCOUPLE WIRE 30 ft NTS	TYPE J	0 TO 1300 F +/- 2 F	11/10/07	CAL
AC2044	AC2044	TYPE J THERMOCOUPLE WIRE 30 ft NTS	TYPE J	0 TO 1300 F +/- 2 F	11/10/07	CAL
AC2045	AC2045	TYPE J THERMOCOUPLE WIRE 30 ft NTS	TYPE J	0 TO 1300 F +/- 2 F	11/10/07	CAL
AC2047	AC2047	TYPE J THERMOCOUPLE WIRE 30 ft NTS	TYPE J	0 TO 1300 F +/- 2 F	11/10/07	CAL

Calibration Abbreviations
UWCE - use with calibrated equipment
CBU - calibrate before use
NQM - not used for quantitative measurement
CAL - calibrated
NCR - no calibration required

MARKUP

APPENDIX A

Heat Rise 1st Run
Tabulated Data

MARKUP

Heat Rise Test
1st Run

Date	Time	TC1	TC2	TC3	TC4	TC5	TC6	TC7	TC8	TC9	TC10	TC11	TC12	TC13	TC14	TC15	TC16	VDC	Amps	Watts
2006/11/13	20:08:58	66.0	65.6	64.8	63.2	62.8	65.3	65.3	65.7	63.1	64.8	64.6	64.8	59.0	60.1	59.4	60.2	-0.30	-0.04	0.01
2006/11/13	20:09:58	66.0	65.6	64.8	63.2	62.8	65.3	65.4	65.6	63.0	64.8	64.6	64.8	59.0	60.4	59.3	60.4	71.80	9.69	695.74
2006/11/13	20:10:58	70.3	78.2	64.8	63.9	62.8	65.2	69.8	71.1	63.0	64.8	64.6	64.8	59.0	60.4	59.3	60.2	218.90	29.30	6413.77
2006/11/13	20:11:58	103.4	126.5	64.6	66.8	62.8	65.2	79.4	87.3	63.0	64.6	64.6	64.8	59.1	60.2	59.1	60.2	229.10	30.44	6973.80
2006/11/13	20:12:58	172.5	194.5	64.8	69.7	63.0	65.3	92.2	106.5	63.2	64.8	64.6	65.0	59.3	60.4	59.1	60.2	229.90	30.35	6977.47
2006/11/13	20:13:58	267.3	272.8	64.6	72.1	62.8	65.2	106.2	134.1	63.2	64.6	64.6	65.0	59.2	60.1	58.9	60.1	229.80	30.21	6942.26
2006/11/13	20:14:58	377.4	352.1	64.8	75.3	63.1	65.2	115.4	156.5	63.4	64.6	64.8	65.1	59.3	60.0	58.6	60.0	230.90	30.22	6977.80
2006/11/13	20:15:58	485.7	424.5	64.6	77.3	63.3	65.2	124.6	171.5	63.6	64.6	64.8	65.2	59.3	60.1	58.6	59.9	231.60	30.20	6994.32
2006/11/13	20:16:58	587.8	490.0	64.6	79.4	63.5	65.1	135.3	199.0	63.8	64.4	64.6	65.5	59.5	60.1	58.6	60.0	231.60	30.19	6992.00
2006/11/13	20:17:58	670.4	532.6	64.4	81.1	63.7	65.0	147.1	210.6	63.8	64.2	64.6	65.6	59.6	60.0	58.4	59.9	227.40	29.75	6765.15
2006/11/13	20:18:58	739.1	584.6	64.6	84.4	64.0	65.0	153.5	227.2	63.9	64.2	64.8	65.7	59.7	60.0	58.6	60.0	230.60	30.26	6977.96
2006/11/13	20:19:58	795.1	619.0	64.6	87.4	64.6	65.0	163.2	240.8	64.1	64.3	64.8	66.0	59.8	59.9	58.4	59.8	230.60	30.32	6991.79
2006/11/13	20:21:32	862.0	662.4	64.6	91.0	65.4	65.1	172.8	260.5	64.2	64.4	65.0	66.6	59.9	60.1	58.6	59.9	230.70	30.38	7008.67
2006/11/13	20:21:34	862.0	660.9	64.6	90.7	65.4	65.1	172.8	260.5	64.2	64.3	65.0	66.6	59.8	60.0	58.6	59.9	230.60	30.37	7003.32
2006/11/13	20:21:36	863.2	660.1	64.6	90.5	65.4	65.1	173.5	263.2	64.2	64.3	65.0	66.6	59.8	60.1	58.6	59.9	230.60	30.37	7003.32
2006/11/13	20:21:38	864.4	660.1	64.6	90.8	65.5	65.1	172.3	263.2	64.2	64.3	65.0	66.6	59.8	60.1	58.6	59.9	230.60	30.37	7003.32
2006/11/13	20:21:40	865.4	660.1	64.6	90.3	65.5	65.1	172.3	262.4	64.2	64.3	65.0	66.6	59.8	60.1	58.6	59.9	230.60	30.38	7005.63
2006/11/13	20:21:42	866.7	660.1	64.6	90.3	65.5	65.1	173.3	261.6	64.2	64.3	65.0	66.6	59.8	60.1	58.6	59.8	230.60	30.38	7005.63
2006/11/13	20:21:44	867.8	660.8	64.6	90.5	65.5	65.1	175.5	262.4	64.2	64.4	64.8	66.6	59.8	60.0	58.6	59.8	230.60	30.37	7003.32
2006/11/13	20:21:46	868.9	662.9	64.6	91.7	65.5	65.1	175.5	262.2	64.2	64.4	64.8	66.6	59.8	60.0	58.6	59.8	230.60	30.37	7003.32
2006/11/13	20:21:48	869.9	666.1	64.6	91.6	65.6	65.1	176.0	262.4	64.2	64.4	65.0	66.6	59.9	60.0	58.6	59.9	230.60	30.38	7005.63
2006/11/13	20:21:50	871.0	667.6	64.6	92.1	65.5	65.1	175.8	262.9	64.2	64.4	65.0	66.6	59.9	60.0	58.6	59.9	230.60	30.38	7005.63
2006/11/13	20:22:34	892.2	677.7	64.6	92.8	66.1	65.1	180.0	272.6	64.3	64.4	65.1	66.8	60.0	59.9	58.8	59.9	230.60	30.39	7007.93
2006/11/13	20:23:34	914.8	693.5	64.6	95.8	66.6	65.1	184.7	277.6	64.3	64.4	65.1	67.1	60.1	60.0	59.2	59.9	230.40	30.37	6997.25
2006/11/13	20:24:34	934.7	700.2	64.6	97.3	67.3	65.0	188.4	283.9	64.2	64.4	65.1	67.3	60.1	60.2	59.2	60.1	230.40	30.37	6997.25
2006/11/13	20:25:34	951.8	706.5	64.6	98.2	68.0	65.0	192.0	294.3	64.2	64.4	65.1	67.7	60.1	60.4	59.2	59.9	230.30	30.38	6996.51
2006/11/13	20:26:34	964.6	717.8	64.8	100.4	69.0	65.1	198.0	294.9	64.4	64.6	65.1	67.9	60.0	60.0	59.4	59.8	230.30	30.38	6996.51
2006/11/13	20:27:34	974.1	715.5	64.8	102.3	69.7	65.1	203.3	307.0	64.4	64.6	65.2	68.2	60.0	60.0	59.4	59.9	230.30	30.39	6998.82
2006/11/13	20:28:34	984.4	723.2	64.8	103.4	70.8	65.3	204.5	306.2	64.6	64.8	65.0	68.4	60.0	60.0	59.5	60.0	230.30	30.39	6998.82
2006/11/13	20:29:34	990.8	729.7	65.0	106.1	71.5	65.4	206.5	317.8	64.6	64.8	65.1	68.6	60.1	60.2	59.7	60.0	230.30	30.39	6998.82
2006/11/13	20:30:34	996.5	730.3	64.8	105.3	72.2	65.2	209.2	318.6	64.6	64.6	65.2	69.0	60.1	60.2	59.7	59.9	230.30	30.40	7001.12
2006/11/13	20:31:34	1002.0	725.0	65.0	107.1	73.3	65.4	213.7	323.2	64.8	65.0	65.2	69.3	60.0	60.1	59.7	59.8	230.30	30.39	6998.82
2006/11/13	20:32:34	1008.5	729.1	64.8	108.1	74.0	65.3	214.0	335.1	64.6	64.8	65.2	69.6	60.0	59.9	59.7	59.9	230.30	30.39	6998.82
2006/11/13	20:33:34	1012.3	731.3	65.0	110.5	74.9	65.4	216.5	321.6	64.8	65.0	65.2	69.9	60.1	60.2	59.7	60.0	230.30	30.39	6998.82
2006/11/13	20:34:34	1015.1	730.5	65.0	110.0	75.8	65.4	216.5	328.1	64.8	65.0	65.3	70.1	60.2	60.0	59.8	60.1	230.40	30.40	7004.16
2006/11/13	20:35:34	1017.8	732.0	65.0	111.7	76.5	65.4	217.8	332.1	64.8	65.0	65.2	70.3	60.1	59.9	59.6	60.0	230.40	30.40	7004.16
2006/11/13	20:36:34	1021.5	740.3	64.8	112.1	77.2	65.4	221.0	339.1	64.8	65.0	65.2	70.6	60.1	59.8	59.7	59.9	230.30	30.40	7001.12
2006/11/13	20:37:34	1023.9	731.2	65.0	113.6	78.2	65.4	221.7	341.4	64.8	65.0	65.2	70.8	60.0	59.6	59.6	59.9	230.30	30.40	7003.42
2006/11/13	20:38:34	1025.8	745.0	65.0	114.0	79.1	65.5	221.2	332.5	64.8	65.0	65.2	71.1	60.1	60.0	59.8	60.0	230.30	30.40	7001.12
2006/11/13	20:39:34	1026.8	739.1	65.1	115.6	79.8	65.5	223.6	339.5	64.8	65.1	65.3	71.3	60.1	59.9	59.8	60.0	230.30	30.40	7001.12
2006/11/13	20:40:34	1029.7	745.3	65.0	117.3	80.6	65.5	223.6	339.2	64.8	65.0	65.3	71.6	60.0	59.9	59.8	60.1	230.40	30.40	7004.16
2006/11/13	20:41:34	1029.9	740.7	65.0	117.2	81.3	65.3	228.7	330.6	64.8	65.0	65.2	71.9	60.1	59.9	59.8	60.1	230.30	30.40	7001.12
2006/11/13	20:42:34	1032.3	736.9	65.0	117.6	82.1	65.4	227.0	341.0	64.8	65.0	65.2	72.1	60.4	60.1	59.8	60.1	230.30	30.40	7001.12
2006/11/13	20:43:34	1033.0	737.6	64.8	118.8	82.8	65.3	225.7	334.9	64.8	64.8	65.3	72.3	60.1	60.1	59.7	60.0	230.20	30.40	6998.08
2006/11/13	20:44:34	1035.8	743.4	64.8	119.0	83.6	65.4	229.6	334.1	64.8	64.8	65.2	72.6	60.0	59.7	59.7	60.1	230.30	30.39	6998.82
2006/11/13	20:45:34	1036.8	741.5	65.1	121.8	84.6	65.6	232.9	337.2	65.0	65.0	65.2	72.8	60.1	60.0	59.7	60.2	230.20	30.40	6998.08
2006/11/13	20:46:34	1037.0	743.1	64.8	121.0	85.1	65.4	231.3	329.4	64.8	64.8	65.4	73.1	60.2	60.0	59.7	60.2	230.40	30.41	7006.46
2006/11/13	20:47:34	1038.5	743.7	65.0	122.0	86.1	65.4	230.9	335.6	64.8	64.8	65.4	73.5	60.6	60.2	59.9	60.4	230.30	30.40	7001.12
2006/11/13	20:48:34	1039.1	744.5	65.0	123.1	86.8	65.4	230.3	330.4	64.8	65.0	65.4	73.6	60.2	60.4	59.7	60.2	230.40	30.41	7006.46
2006/11/13	20:49:34	1039.9	739.6	65.0	124.1	87.6	65.4	233.7	334.9	64.8	65.0	65.3	73.9	60.4	60.4	59.7	60.4	230.20	30.40	6998.08
2006/11/13	20:50:34	1040.5	743.5	65.0	123.7	88.3	65.4	232.0	337.9	64.8	65.0	65.2	74.0	60.4	60.4	59.8	60.4	230.30	30.40	7001.12
2006/11/13	20:51:34	1042.4	740.7	65.0	124.8	88.8	65.4	233.9	333.2	64.8	65.0	65.2	74.1	60.4	60.2	59.8	60.4	230.30	30.39	7001.86
2006/11/13	20:52:34	1042.5	744.2	65.0	125.4	89.4	65.4	234.4	345.6	64.8	65.0	65.1	74.4	60.4	60.0	59.8	60.4	230.30	30.39	6998.82
2006/11/13	20:53:34	1043.7	742.5	65.1	126.0	90.3	65.5	236.5	338.9	65.0	65.0	65.2	74.7	60.4	60.0	60.0	60.6	230.20	30.40	7001.12
2006/11/13	20:54:34	1044.7	743.4	65.2	127.0	91.1	65.6	235.7	343.8	65.1	65.1	65.2	74.9	60.4	60.2	59.9	60.6	230.20	30.41	7000.38
2006/11/13	20:55:34	1045.3	744.7	65.3	127.9	91.9	65.7	237.7	331.2	65.2	65.2	65.3	75.3	60.4	60.8	60.0	60.6	230.20	30.40	6998.08

Heat Rise Test
1st Run

Date	Time	TC1	TC2	TC3	TC4	TC5	TC6	TC7	TC8	TC9	TC10	TC11	TC12	TC13	TC14	TC15	TC16	VDC	Amps	Watts
2006/11/13	20:56:34	1046.3	745.8	65.3	128.6	92.6	65.7	238.1	335.7	65.1	65.2	65.3	75.4	60.6	60.6	60.1	60.6	230.30	30.40	7001.12
2006/11/13	20:57:34	1047.0	746.0	65.2	129.9	93.1	65.6	238.4	343.2	65.1	65.1	65.2	75.6	60.6	60.6	60.2	60.8	230.30	30.41	7003.42
2006/11/13	20:58:34	1047.6	744.7	65.2	129.8	93.7	65.5	241.4	342.4	65.0	65.0	65.1	75.6	60.4	60.4	60.0	60.4	230.30	30.40	7001.12
2006/11/13	20:59:34	1048.5	747.0	65.2	130.3	94.4	65.5	240.9	339.1	65.1	65.1	65.1	75.8	60.6	60.4	60.1	60.6	230.30	30.40	7001.12
2006/11/13	21:00:34	1048.0	744.7	65.2	131.5	95.1	65.6	240.9	340.4	65.0	65.1	65.1	76.1	60.4	60.4	60.0	60.8	230.20	30.38	6995.78
2006/11/13	21:01:34	1047.4	748.8	65.2	130.8	95.3	65.5	243.4	340.2	65.1	65.1	65.0	76.3	60.6	60.4	60.2	60.8	230.00	30.37	6985.10
2006/11/13	21:02:34	1049.0	746.5	65.2	132.2	96.3	65.6	243.8	343.4	65.1	65.1	65.1	76.6	60.4	60.4	60.2	60.6	230.00	30.36	6982.80
2006/11/13	21:03:34	1050.0	748.9	65.3	133.3	96.7	65.6	242.2	340.7	65.2	65.1	65.2	76.9	60.8	60.4	60.4	60.8	229.90	30.35	6977.47
2006/11/13	21:04:34	1049.7	742.3	65.3	133.5	97.3	65.6	245.2	347.9	65.2	65.1	65.1	76.9	60.6	60.6	60.1	60.8	230.00	30.36	6985.10
2006/11/13	21:05:34	1049.0	742.3	65.3	134.6	97.8	65.6	243.7	342.9	65.2	65.1	65.1	77.1	60.6	60.4	60.1	60.6	230.00	30.37	6985.10
2006/11/13	21:06:34	1050.8	741.5	65.4	135.3	98.6	65.6	245.5	341.6	65.3	65.1	65.0	77.3	60.6	60.4	60.2	60.8	230.00	30.35	6980.50
2006/11/13	21:07:34	1052.0	747.3	65.4	134.7	99.1	65.6	246.3	291.7	65.3	65.2	65.2	77.8	60.8	60.8	60.4	60.9	230.00	30.36	6982.80
2006/11/13	21:08:34	1051.5	747.8	65.4	135.6	99.6	65.6	247.8	297.3	65.3	65.2	65.1	77.8	60.6	60.9	60.1	60.4	229.90	30.36	6979.76
2006/11/13	21:09:34	1050.6	745.3	65.4	137.1	100.3	65.6	246.0	302.7	65.3	65.2	65.1	78.0	60.6	60.4	60.2	60.4	229.90	30.35	6977.47
2006/11/13	21:10:34	1051.9	746.5	65.4	137.4	101.1	65.6	245.5	301.1	65.3	65.1	65.1	78.2	60.6	60.6	60.1	60.6	230.00	30.36	6982.80
2006/11/13	21:11:34	1052.4	746.3	65.4	137.8	101.3	65.6	249.1	304.9	65.3	65.1	65.0	78.3	60.6	60.6	60.1	60.6	230.00	30.36	6982.80
2006/11/13	21:12:34	1053.3	749.1	65.3	139.5	101.6	65.5	247.9	303.4	65.2	65.0	65.0	78.3	60.6	60.4	60.0	60.4	230.00	30.36	6982.80
2006/11/13	21:13:34	1054.0	748.1	65.3	138.8	102.3	65.4	248.1	311.5	65.1	64.8	65.0	78.6	60.6	60.4	60.0	60.2	230.00	30.36	6982.80
2006/11/13	21:14:34	1053.9	747.0	65.3	138.8	102.9	65.5	251.8	309.9	65.2	65.0	65.1	78.9	60.6	60.6	60.2	60.6	230.00	30.36	6982.80
2006/11/13	21:15:34	1054.2	744.7	65.4	140.5	103.4	65.4	249.9	312.9	65.2	64.8	65.1	79.1	60.6	60.8	60.0	60.4	229.90	30.35	6977.47
2006/11/13	21:16:34	1055.2	742.6	65.4	139.7	103.9	65.5	253.0	316.4	65.3	65.0	65.0	79.2	60.8	60.8	60.0	60.4	230.00	30.36	6982.80
2006/11/13	21:17:34	1055.8	750.8	65.4	141.0	104.3	65.5	251.5	310.1	65.3	65.0	65.1	79.6	60.6	60.8	60.1	60.6	230.00	30.36	6982.80
2006/11/13	21:18:34	1055.7	750.2	65.4	141.0	104.8	65.5	253.3	311.7	65.3	65.0	65.2	79.8	60.9	61.1	60.4	60.6	230.10	30.37	6988.14
2006/11/13	21:19:34	1056.7	752.1	65.4	141.4	105.3	65.5	250.4	312.6	65.3	65.0	65.1	79.8	60.6	61.2	60.4	60.6	230.30	30.40	7001.12
2006/11/13	21:20:34	1056.9	743.5	65.5	141.6	105.6	65.6	252.6	310.9	65.4	65.0	65.1	80.1	60.9	61.1	60.4	60.6	230.20	30.39	6998.08
2006/11/13	21:21:34	1057.7	750.8	65.5	142.8	106.1	65.5	253.6	316.6	65.4	65.0	65.1	80.3	60.9	61.2	60.4	60.6	230.20	30.39	6998.08
2006/11/13	21:22:34	1059.0	750.5	65.5	143.3	106.8	65.6	256.9	311.3	65.5	65.1	65.3	80.6	61.0	60.9	60.4	60.6	230.20	30.40	6998.08
2006/11/13	21:23:34	1060.0	748.4	65.6	143.4	107.3	65.7	254.0	316.9	65.6	65.2	65.2	80.8	61.0	61.2	60.4	60.6	230.20	30.40	6998.08
2006/11/13	21:24:34	1060.0	749.4	65.7	144.1	108.1	65.8	258.8	320.7	65.7	65.3	65.2	81.1	61.1	61.2	60.4	60.6	230.20	30.40	7000.38
2006/11/13	21:25:34	1060.2	753.8	65.7	144.6	108.3	65.7	255.1	317.6	65.7	65.3	65.2	81.2	60.9	61.2	60.4	60.6	230.30	30.37	6994.21
2006/11/13	21:26:34	1061.4	757.0	65.8	144.5	109.0	65.8	255.4	317.9	65.8	65.4	65.3	81.5	61.0	60.8	60.4	60.8	230.20	30.39	6995.78
2006/11/13	21:27:34	1062.5	754.0	65.8	145.8	109.3	65.8	257.2	318.7	65.8	65.4	65.2	81.6	61.1	61.3	60.6	60.8	230.30	30.39	6998.82
2006/11/13	21:28:34	1062.5	751.5	65.7	144.6	109.9	65.7	259.6	325.8	65.7	65.3	65.2	81.7	61.0	61.2	60.6	60.6	230.30	30.40	7003.42
2006/11/13	21:29:34	1062.0	754.1	65.8	146.5	110.2	65.8	257.4	319.4	65.8	65.4	65.3	81.9	61.0	61.3	60.4	60.6	230.20	30.40	6998.08
2006/11/13	21:30:34	1062.2	754.8	65.8	146.5	110.6	65.8	259.4	319.4	65.8	65.4	65.3	82.1	61.1	61.3	60.6	60.8	230.30	30.40	7001.12
2006/11/13	21:31:34	1062.5	748.3	65.9	146.5	110.8	65.8	260.1	323.7	65.8	65.4	65.2	82.3	61.0	61.2	60.4	60.6	230.20	30.40	6998.08
2006/11/13	21:32:34	1064.3	754.8	65.8	147.7	111.2	65.7	258.2	323.4	65.7	65.3	65.2	82.4	61.1	61.2	60.6	60.6	230.20	30.40	6998.08
2006/11/13	21:33:34	1064.2	751.0	65.9	148.3	111.6	65.8	260.7	321.1	65.8	65.4	65.2	82.6	61.1	61.2	60.4	60.6	230.30	30.40	7001.12
2006/11/13	21:34:34	1064.9	752.9	65.9	148.5	111.9	65.8	262.2	324.3	65.8	65.4	65.3	83.0	61.1	61.3	60.4	60.6	230.10	30.40	6995.04
2006/11/13	21:35:34	1065.9	749.5	65.9	149.7	112.5	65.8	263.7	325.3	65.8	65.4	65.3	83.1	60.9	61.1	60.4	60.6	230.20	30.39	6998.82
2006/11/13	21:36:34	1065.2	752.7	66.1	151.3	113.3	66.0	259.8	322.0	66.0	65.5	65.4	83.3	61.1	61.2	60.6	60.8	230.20	30.39	6995.78
2006/11/13	21:37:34	1065.5	749.7	66.2	150.4	113.6	66.1	263.7	323.7	66.2	65.6	65.4	83.5	61.0	61.3	60.6	60.8	230.20	30.39	6998.82
2006/11/13	21:38:34	1066.0	759.8	66.2	150.1	114.2	66.1	263.2	327.2	66.2	65.7	65.5	83.8	61.1	61.4	60.6	61.0	230.10	30.40	6995.04
2006/11/13	21:39:34	1066.2	751.8	66.3	151.5	114.3	66.2	262.4	324.2	66.3	65.8	65.5	83.9	61.1	61.3	60.6	60.9	230.10	30.41	6997.34
2006/11/13	21:40:34	1066.2	751.8	66.4	150.8	114.8	66.4	265.0	326.6	66.4	65.9	65.5	84.2	61.2	61.3	60.8	61.0	230.20	30.40	6998.08
2006/11/13	21:41:34	1067.4	755.0	66.6	152.3	115.2	66.3	264.3	324.3	66.6	66.0	65.5	84.3	61.2	61.4	60.8	61.0	230.20	30.39	6995.78
2006/11/13	21:42:34	1068.4	757.0	66.6	152.6	115.8	66.3	266.8	331.4	66.6	66.0	65.5	84.6	61.1	61.3	60.6	60.9	230.20	30.41	7000.38
2006/11/13	21:43:34	1067.9	757.8	66.6	151.9	116.1	66.4	266.5	329.0	66.8	66.1	65.6	84.8	60.9	61.3	60.8	61.1	230.20	30.41	7000.38
2006/11/13	21:44:34	1068.0	755.2	66.6	152.0	116.8	66.6	267.8	328.2	66.8	66.2	65.5	84.9	61.2	61.2	60.8	61.0	230.00	30.38	6987.40
2006/11/13	21:45:34	1069.5	757.2	66.8	152.9	117.0	66.6	267.1	329.1	66.8	66.2	65.6	85.1	61.0	61.4	60.8	61.0	230.20	30.39	6995.78
2006/11/13	21:46:34	1068.9	756.8	66.6	153.1	117.3	66.4	268.7	328.5	66.6	66.1	65.6	85.3	61.0	61.3	60.8	60.9	229.90	30.38	6984.36
2006/11/13	21:47:34	1068.7	755.6	66.6	153.4	117.5	66.6	268.9	334.6	66.8	66.1	65.6	85.3	61.0	61.3	60.6	60.8	230.30	30.36	6994.94
2006/11/13	21:48:34	1069.5	754.5	66.8	155.3	117.7	66.6	267.8	330.4	66.8	66.1	65.6	85.6	60.8	61.1	60.6	60.6	230.30	30.40	7001.12
2006/11/13	21:49:34	1068.2	757.7	66.6	157.0	118.2	66.4	268.9	332.5	66.6	66.0	65.5	85.8	60.8	61.0	60.6	60.6	230.10	30.39	6992.74
2006/11/13	21:50:34	1069.5	758.8	66.8	156.5	118.6	66.6	269.5	331.6	66.8	66.2	65.5	85.9	60.9	61.2	60.6	60.6	230.20	30.40	6998.08
2006/11/13	21:51:34	1069.8	759.0	66.8	155.3	118.9	66.6	268.2	332.5	66.8	66.2	65.6	86.1	60.8	61.0	60.6	60.9	230.20	30.40	6998.08

Heat Rise Test
1st Run

Date	Time	TC1	TC2	TC3	TC4	TC5	TC6	TC7	TC8	TC9	TC10	TC11	TC12	TC13	TC14	TC15	TC16	VDC	Amps	Watts
2006/11/13	21:52:34	1071.4	762.6	66.8	155.1	119.1	66.6	271.4	332.5	66.8	66.1	65.6	86.3	60.8	61.2	60.6	60.6	230.20	30.40	6998.08
2006/11/13	21:53:34	1071.6	758.7	66.8	155.8	119.6	66.6	272.1	334.1	66.8	66.1	65.6	86.4	60.9	61.0	60.6	60.6	230.20	30.40	6998.08
2006/11/13	21:54:34	1071.4	759.2	67.0	155.4	119.9	66.6	272.2	338.9	66.8	66.2	65.7	86.6	60.9	61.1	60.6	60.6	230.20	30.41	7000.38
2006/11/13	21:55:34	1072.8	759.5	67.1	156.6	120.4	66.8	274.6	336.5	67.1	66.3	65.6	86.8	60.9	61.2	60.6	60.8	230.10	30.39	6992.74
2006/11/13	21:56:34	1072.9	757.9	67.1	156.8	120.5	66.8	271.7	337.1	67.1	66.3	65.6	86.8	60.8	61.3	60.6	60.6	230.20	30.41	7000.38
2006/11/13	21:57:34	1072.5	760.5	67.1	157.5	120.8	66.8	275.0	333.1	67.0	66.3	65.7	87.1	60.9	61.1	60.6	60.8	230.20	30.40	7000.38
2006/11/13	21:58:34	1072.9	756.8	67.3	158.8	121.0	67.0	271.7	334.8	67.2	66.6	65.8	87.4	61.1	61.0	60.8	60.8	230.20	30.39	6995.78
2006/11/13	21:59:34	1073.1	757.7	67.3	158.8	121.5	66.8	275.2	332.2	67.2	66.3	65.7	87.6	60.8	61.3	60.6	60.8	230.20	30.40	6998.08
2006/11/13	22:00:34	1073.2	763.1	67.3	158.5	121.8	67.0	274.4	337.6	67.2	66.4	65.9	87.8	61.0	61.1	60.8	60.8	230.20	30.40	6998.08
2006/11/13	22:01:34	1074.5	759.3	67.2	159.9	122.2	67.0	276.0	342.6	67.2	66.3	65.7	87.8	61.0	61.2	60.6	60.6	230.30	30.41	7003.42
2006/11/13	22:02:34	1074.7	761.3	67.2	158.2	122.5	66.8	273.6	335.5	67.1	66.2	65.8	88.0	60.9	61.3	60.6	60.6	230.20	30.40	6998.08
2006/11/13	22:03:34	1074.4	762.2	67.3	158.8	122.8	66.8	274.4	340.9	67.1	66.2	65.8	88.2	60.9	61.2	60.6	60.6	230.20	30.40	6998.08
2006/11/13	22:04:34	1074.3	760.3	67.3	159.5	123.1	67.0	275.8	331.4	67.1	66.3	65.8	88.2	60.8	61.0	60.4	60.6	230.20	30.40	7000.38
2006/11/13	22:05:34	1074.2	761.7	67.3	160.0	123.3	67.0	278.0	336.2	67.2	66.3	65.9	88.6	60.9	61.2	60.6	60.6	230.20	30.40	6998.08
2006/11/13	22:06:34	1074.9	767.1	67.5	160.9	123.8	67.1	276.3	340.2	67.3	66.6	65.9	88.7	60.8	61.2	60.6	60.6	230.20	30.42	7002.68
2006/11/13	22:07:34	1076.1	768.5	67.6	160.5	124.2	67.3	276.7	343.4	67.3	66.6	65.9	88.8	60.9	61.0	60.6	60.6	230.20	30.41	7000.38
2006/11/13	22:08:34	1076.9	764.3	67.8	161.3	124.5	67.3	276.6	342.6	67.6	66.8	66.0	89.1	61.0	60.8	60.6	60.1	230.30	30.41	7003.42
2006/11/13	22:09:34	1077.6	762.5	67.8	161.8	124.6	67.3	278.4	343.1	67.6	66.8	66.1	89.2	60.6	60.6	59.9	59.7	229.90	30.34	6975.17
2006/11/13	22:10:34	1076.8	761.9	67.8	161.5	125.0	67.3	279.2	345.9	67.6	66.8	66.0	89.3	60.4	60.6	59.8	60.0	230.20	30.41	7000.38
2006/11/13	22:11:34	1077.4	762.2	67.7	162.9	125.0	67.3	279.6	343.1	67.6	66.8	66.0	89.6	60.4	60.6	60.0	60.2	230.20	30.40	6998.08
2006/11/13	22:12:34	1077.2	761.6	67.8	161.6	125.5	67.3	279.7	342.3	67.7	66.8	66.0	89.6	60.4	60.8	60.2	60.4	230.20	30.40	6998.08
2006/11/13	22:13:34	1078.3	761.1	67.9	161.7	125.8	67.5	279.7	341.6	67.8	67.0	66.1	89.9	60.9	60.8	60.6	60.6	230.20	30.40	6998.08
2006/11/13	22:14:34	1079.0	765.0	67.9	162.1	126.0	67.5	281.2	342.0	67.7	66.8	66.0	89.8	60.6	60.6	60.4	60.4	230.20	30.40	7000.38
2006/11/13	22:15:34	1079.0	768.0	68.0	163.0	126.5	67.5	280.1	341.6	67.8	66.8	66.0	90.1	60.8	60.9	60.4	60.6	230.30	30.41	7003.42
2006/11/13	22:16:34	1079.2	761.7	68.0	163.3	126.3	67.5	280.4	339.7	67.8	66.8	66.1	90.3	60.9	61.0	60.6	60.6	230.20	30.41	7000.38
2006/11/13	22:17:34	1079.7	761.6	68.0	163.5	127.2	67.5	281.7	356.3	67.8	67.0	66.0	90.3	60.8	61.0	60.4	60.6	230.20	30.40	6998.08
2006/11/13	22:18:34	1080.1	764.0	68.0	163.7	127.0	67.5	282.7	365.1	67.7	66.8	66.0	90.5	60.9	60.9	60.4	60.4	230.30	30.40	7001.12
2006/11/13	22:19:34	1079.2	762.9	68.1	164.2	127.5	67.6	283.4	355.6	67.8	66.8	66.1	90.6	60.6	60.9	60.2	60.4	230.20	30.41	7000.38
2006/11/13	22:20:34	1080.0	771.7	68.2	163.1	127.9	67.6	282.0	354.2	67.9	66.8	66.0	90.8	60.6	60.6	60.2	60.2	230.10	30.31	6974.33
2006/11/13	22:21:34	1080.5	762.9	68.2	164.9	128.1	67.7	284.4	351.3	68.0	67.0	66.1	91.0	60.6	60.6	60.1	60.1	230.10	30.38	6990.44
2006/11/13	22:22:34	1079.9	765.3	68.2	163.0	128.2	67.7	287.0	360.6	68.0	67.0	66.2	91.2	60.6	60.8	60.4	60.4	230.30	30.40	7001.12
2006/11/13	22:23:34	1080.2	774.5	68.2	164.4	128.5	67.8	284.6	357.3	68.0	67.0	66.2	91.3	60.6	60.8	60.2	60.2	230.20	30.40	6998.08
2006/11/13	22:24:34	1081.0	769.3	68.3	165.3	128.4	67.8	283.4	361.3	68.1	67.1	66.2	91.5	60.6	61.0	60.2	60.4	230.30	30.41	7003.42
2006/11/13	22:25:34	1081.6	768.1	68.3	165.8	129.0	67.9	284.4	364.0	68.1	67.1	66.2	91.6	60.8	60.9	60.2	60.4	230.20	30.41	7000.38
2006/11/13	22:26:34	1082.0	766.6	68.4	165.0	129.4	67.9	288.4	364.5	68.2	67.2	66.3	91.7	60.6	60.9	60.2	60.4	230.20	30.41	7000.38
2006/11/13	22:27:34	1082.7	769.3	68.6	163.9	129.2	68.1	284.7	361.1	68.2	67.2	66.2	91.8	60.6	60.2	60.1	60.4	230.20	30.38	6993.48
2006/11/13	22:28:34	1082.3	768.4	68.6	165.0	129.7	68.1	285.9	370.4	68.3	67.3	66.3	92.0	60.6	60.8	60.1	60.6	230.20	30.40	6998.08
2006/11/13	22:29:34	1081.9	765.5	68.8	166.4	130.0	68.2	285.7	360.8	68.4	67.3	66.4	92.2	60.6	60.8	60.4	60.6	230.20	30.41	7000.38
2006/11/13	22:30:34	1082.9	768.0	68.8	166.6	129.9	68.1	286.5	366.7	68.4	67.3	66.4	92.3	60.6	60.8	60.2	60.4	230.20	30.40	7000.38
2006/11/13	22:31:34	1084.3	771.0	68.8	166.0	130.4	68.2	287.4	365.1	68.4	67.3	66.4	92.6	60.6	60.6	60.0	60.4	230.20	30.40	6998.08
2006/11/13	22:32:34	1083.5	767.6	68.8	167.7	130.5	68.2	287.2	365.4	68.6	67.3	66.4	92.8	60.6	60.6	60.2	60.4	230.20	30.41	7000.38
2006/11/13	22:33:34	1083.0	773.0	69.0	166.8	130.8	68.2	289.2	361.0	68.6	67.5	66.4	92.6	60.4	60.6	60.0	60.2	230.30	30.40	7001.12
2006/11/13	22:34:34	1083.2	761.0	69.0	166.4	130.8	68.3	290.2	363.7	68.6	67.5	66.6	92.8	60.4	60.6	60.1	60.4	230.10	30.39	6992.74
2006/11/13	22:35:34	1083.6	770.8	69.0	167.8	131.0	68.3	289.4	370.7	68.8	67.5	66.6	93.1	60.6	60.8	60.2	60.2	230.30	30.41	7003.42
2006/11/13	22:36:34	1083.6	770.4	69.1	167.7	131.5	68.4	289.4	359.6	68.8	67.6	66.6	93.1	60.4	60.8	60.0	60.0	230.30	30.40	7001.12
2006/11/13	22:37:34	1084.4	768.7	69.1	167.6	131.6	68.4	289.9	376.3	68.8	67.6	66.6	93.3	60.6	60.8	60.1	60.1	230.10	30.40	6995.04
2006/11/13	22:38:34	1084.8	772.0	69.1	167.9	131.8	68.4	291.5	369.6	68.8	67.6	66.6	93.5	60.4	60.6	59.9	60.1	230.20	30.40	7000.38
2006/11/13	22:39:34	1084.5	775.1	69.3	170.4	131.8	68.6	292.0	370.5	69.0	67.7	66.6	93.6	60.6	60.9	60.0	60.2	230.30	30.40	7001.12
2006/11/13	22:40:34	1085.6	768.5	69.3	169.3	132.7	68.8	290.4	359.8	69.1	67.9	66.6	93.8	60.6	61.1	60.4	60.4	230.20	30.41	7000.38
2006/11/13	22:41:34	1085.7	772.5	69.3	168.2	132.3	68.8	290.7	368.6	69.1	67.9	66.8	93.9	60.8	61.0	60.4	60.4	230.20	30.40	6998.08
2006/11/13	22:42:34	1085.5	770.9	69.3	168.8	132.8	68.8	289.6	368.3	69.3	67.9	66.8	94.1	60.8	61.0	60.2	60.4	230.20	30.40	7000.38
2006/11/13	22:43:34	1086.3	767.1	69.5	169.1	133.2	69.0	293.2	364.9	69.3	68.0	67.0	94.2	60.9	60.9	60.2	60.4	230.20	30.40	6998.08
2006/11/13	22:44:34	1086.9	773.2	69.3	169.3	133.0	69.0	291.4	370.3	69.3	68.0	67.0	94.3	60.6	60.9	60.2	60.4	230.20	30.40	6998.08
2006/11/13	22:45:34	1086.9	770.1	69.6	169.8	133.7	69.1	291.7	368.5	69.5	68.1	67.0	94.5	60.8	61.0	60.4	60.4	230.00	30.39	6989.70
2006/11/13	22:46:34	1086.8	773.7	69.6	171.5	133.5	69.1	294.0	364.6	69.5	68.2	67.1	94.6	60.6	61.1	60.4	60.4	230.20	30.40	6998.08
2006/11/13	22:47:34	1087.2	769.5	69.7	169.9	133.8	69.1	294.2	370.7	69.6	68.2	67.1	94.8	60.9	61.1	60.4	60.6	230.20	30.40	6998.08

Heat Rise Test
1st Run

Date	Time	TC1	TC2	TC3	TC4	TC5	TC6	TC7	TC8	TC9	TC10	TC11	TC12	TC13	TC14	TC15	TC16	VDC	Amps	Watts
2006/11/13	22:48:34	1087.9	769.5	69.8	170.3	134.5	69.3	293.2	377.0	69.8	68.4	67.1	95.1	60.9	61.1	60.6	60.4	230.20	30.41	7000.38
2006/11/13	22:49:34	1088.1	772.7	69.8	169.3	134.3	69.3	296.6	376.6	69.8	68.6	67.2	95.1	60.9	61.0	60.4	60.4	230.20	30.41	7000.38
2006/11/13	22:50:34	1088.4	774.0	70.1	171.1	134.8	69.7	292.8	368.9	70.1	68.8	67.3	95.3	61.0	61.5	60.4	60.6	230.20	30.40	6998.08
2006/11/13	22:51:34	1087.5	771.1	70.2	171.1	134.9	69.8	297.2	372.3	70.3	69.0	67.3	95.6	61.1	61.4	60.6	60.9	230.20	30.40	6998.08
2006/11/13	22:52:34	1089.1	772.5	70.3	171.0	135.1	70.0	296.1	377.6	70.4	69.1	67.5	95.8	61.2	61.6	60.6	60.8	230.20	30.41	7000.38
2006/11/13	22:53:34	1088.2	777.5	70.3	171.8	135.6	70.1	295.7	375.0	70.6	69.3	67.6	96.1	61.2	61.6	60.6	60.9	230.20	30.40	6998.08
2006/11/13	22:54:34	1089.0	771.9	70.6	172.0	136.1	70.2	297.1	373.1	70.8	69.5	67.6	96.1	61.1	61.3	60.6	60.9	230.20	30.41	7000.38
2006/11/13	22:55:34	1087.6	774.7	70.6	171.6	135.7	70.2	296.8	374.3	70.8	69.5	67.7	96.3	61.1	61.4	60.8	60.8	230.20	30.40	6998.08
2006/11/13	22:56:34	1089.5	776.8	70.6	172.3	136.2	70.3	298.1	372.1	70.9	69.7	67.6	96.3	61.1	61.3	60.8	60.6	230.20	30.40	6998.08
2006/11/13	22:57:34	1089.7	774.8	70.6	171.8	136.4	70.2	298.1	379.3	70.8	69.5	67.6	96.3	61.2	61.4	60.8	60.9	230.20	30.40	6998.08
2006/11/13	22:58:34	1090.2	774.0	70.6	173.8	136.3	70.2	298.9	377.2	70.9	69.5	67.7	96.6	61.2	61.4	61.0	61.0	230.30	30.40	7001.12
2006/11/13	22:59:34	1090.3	773.2	70.8	172.5	136.9	70.3	298.1	377.3	70.9	69.6	67.7	96.7	61.2	61.4	60.8	61.0	230.20	30.40	6998.08
2006/11/13	23:00:34	1089.5	775.6	70.9	174.0	136.7	70.6	296.4	378.3	71.3	69.9	67.7	96.9	61.4	61.4	61.0	61.1	230.20	30.40	6998.08
2006/11/13	23:01:34	1091.0	779.1	71.1	173.5	137.0	70.6	298.6	373.2	71.3	69.9	67.8	97.0	61.5	61.7	61.0	61.0	230.20	30.41	7000.38
2006/11/13	23:02:34	1090.4	776.6	70.8	174.5	137.3	70.6	300.7	378.5	71.1	69.6	67.8	97.2	61.4	61.5	60.9	61.0	230.20	30.40	6998.08
2006/11/13	23:03:34	1091.2	772.7	71.1	173.8	137.8	70.8	299.9	376.6	71.3	69.8	67.8	97.3	61.3	61.4	60.9	61.0	230.20	30.41	7000.38
2006/11/13	23:04:34	1091.9	778.0	71.1	174.8	137.8	70.8	300.7	382.5	71.5	69.9	67.8	97.4	61.3	61.5	60.8	61.0	230.20	30.40	7000.38
2006/11/13	23:05:34	1091.0	774.5	71.3	175.3	137.9	71.1	300.2	376.8	71.7	70.2	68.0	97.6	61.3	61.6	60.9	61.1	230.20	30.41	7000.38
2006/11/13	23:06:34	1092.5	771.1	71.3	174.5	138.3	71.1	300.6	377.8	71.7	70.2	68.0	97.7	61.2	61.4	61.0	60.9	230.20	30.41	7000.38
2006/11/13	23:07:34	1092.0	776.8	71.6	175.0	138.5	71.3	303.6	381.0	71.9	70.3	68.0	97.8	61.1	61.5	60.9	60.9	230.20	30.40	6998.08
2006/11/13	23:08:34	1092.7	780.8	71.6	175.5	138.5	71.3	302.8	377.6	71.9	70.4	68.1	97.9	61.2	61.5	60.9	61.0	230.20	30.40	6998.08
2006/11/13	23:09:34	1092.4	774.2	71.8	175.3	138.6	71.5	301.6	381.5	72.1	70.6	68.2	98.1	61.2	61.6	60.9	61.0	230.20	30.40	6998.08
2006/11/13	23:10:34	1092.5	775.8	71.9	175.2	139.2	71.6	301.8	377.9	72.2	70.6	68.3	98.3	61.3	61.5	61.1	61.1	230.20	30.41	7000.38
2006/11/13	23:11:34	1093.4	778.0	72.0	176.5	139.2	71.7	300.1	388.6	72.4	70.8	68.3	98.4	61.3	61.5	61.2	61.2	230.20	30.40	6998.08
2006/11/13	23:12:34	1094.0	780.1	72.1	175.2	139.5	71.9	304.1	379.1	72.5	70.9	68.3	98.6	61.2	61.6	61.1	61.1	230.20	30.41	7000.38
2006/11/13	23:13:34	1093.0	782.5	72.1	175.8	139.5	71.9	305.4	386.5	72.5	70.9	68.6	98.8	61.5	61.7	61.4	61.3	230.30	30.40	7001.12
2006/11/13	23:14:34	1094.0	775.5	72.2	176.8	140.3	72.0	303.6	384.6	72.8	71.1	68.6	98.8	61.5	61.9	61.3	61.2	230.20	30.40	6998.08
2006/11/13	23:15:34	1094.5	779.5	72.3	176.0	140.0	72.2	301.7	381.2	72.9	71.3	68.6	99.1	61.5	61.7	61.3	61.3	230.20	30.40	6998.08
2006/11/13	23:16:34	1094.7	773.7	72.4	176.5	140.3	72.2	304.1	386.3	73.1	71.5	68.6	99.1	61.3	61.6	61.2	61.2	230.20	30.40	6998.08
2006/11/13	23:17:34	1094.3	778.7	72.4	176.2	140.5	72.2	302.9	383.8	73.1	71.5	68.6	99.3	61.4	61.5	61.2	61.1	230.20	30.41	7000.38
2006/11/13	23:18:34	1094.9	777.1	72.5	177.5	140.9	72.4	304.1	384.9	73.3	71.6	68.8	99.5	61.5	61.7	61.3	61.2	230.20	30.41	7000.38
2006/11/13	23:19:34	1095.2	779.2	72.6	177.8	140.5	72.5	304.3	383.4	73.3	71.7	68.8	99.6	61.4	61.8	61.2	61.3	230.20	30.40	6998.08
2006/11/13	23:20:34	1095.5	779.7	72.7	178.3	140.8	72.6	308.5	387.1	73.5	71.8	68.8	99.7	61.6	61.8	61.3	61.5	230.20	30.40	6998.08
2006/11/13	23:21:34	1096.1	780.4	72.7	176.7	141.0	72.6	307.7	387.1	73.6	71.9	69.0	99.8	61.5	61.8	61.2	61.5	230.20	30.40	6998.08
2006/11/13	23:22:34	1097.1	773.8	72.9	178.7	141.5	72.8	306.8	388.7	73.7	72.0	69.0	99.9	61.4	61.6	61.2	61.3	230.20	30.40	6998.08
2006/11/13	23:23:34	1097.2	775.7	72.9	176.8	141.7	72.9	308.0	386.1	73.7	72.0	69.1	100.0	61.3	61.6	61.2	61.2	230.20	30.41	7000.38
2006/11/13	23:24:34	1097.2	781.2	72.9	177.7	141.8	72.9	305.1	388.9	73.7	72.0	69.1	100.2	61.4	61.5	61.2	61.2	230.20	30.40	6998.08
2006/11/13	23:25:34	1098.1	780.6	73.1	176.8	141.6	72.8	308.9	387.3	73.8	72.1	69.1	100.3	61.2	61.6	61.2	61.2	230.20	30.40	6998.08
2006/11/13	23:26:34	1098.4	784.4	73.1	178.7	142.2	73.1	307.9	388.6	73.9	72.2	69.3	100.4	61.3	61.6	61.2	61.2	230.20	30.41	7000.38
2006/11/13	23:27:34	1098.0	779.1	73.1	178.2	141.7	72.9	309.6	357.3	73.8	72.1	69.3	100.6	61.4	61.7	61.2	61.2	230.20	30.40	6998.08
2006/11/13	23:28:34	1097.8	780.9	73.1	178.5	142.1	73.1	308.3	377.6	73.9	72.1	69.3	100.7	61.3	61.5	61.2	61.2	230.20	30.39	6995.78
2006/11/13	23:29:34	1097.8	780.8	73.3	177.7	142.5	72.9	308.8	386.3	73.9	72.1	69.3	100.7	61.2	61.5	61.1	61.1	230.20	30.40	6998.08
2006/11/13	23:30:34	1097.7	780.6	73.3	178.5	142.5	73.1	309.1	385.8	74.0	72.1	69.3	100.9	61.4	61.6	61.2	61.2	230.20	30.40	6998.08
2006/11/13	23:31:34	1099.0	778.8	73.3	180.2	142.7	73.1	308.9	388.6	74.0	72.1	69.3	100.8	61.3	61.4	61.1	61.0	230.20	30.40	6998.08
2006/11/13	23:32:34	1097.7	780.5	73.3	178.5	142.6	73.1	309.1	360.6	74.1	72.2	69.3	100.9	61.3	61.3	60.9	61.0	230.20	30.40	6998.08
2006/11/13	23:33:34	1097.2	780.1	73.3	179.5	142.7	73.1	309.1	370.3	74.1	72.2	69.5	101.1	61.2	61.5	60.9	61.0	230.20	30.40	6998.08
2006/11/13	23:34:34	1097.1	779.4	73.3	179.5	142.6	73.3	308.6	353.1	74.1	72.2	69.5	101.2	61.1	61.5	60.9	61.0	230.10	30.39	6992.74
2006/11/13	23:35:34	1097.4	781.7	73.3	180.2	143.2	73.3	308.9	357.3	74.0	72.1	69.5	101.2	61.2	61.3	60.9	60.9	230.20	30.40	6998.08
2006/11/13	23:36:34	1097.2	782.5	73.6	180.2	142.9	73.3	310.6	355.2	74.3	72.3	69.6	101.4	61.3	61.5	61.0	61.1	230.20	30.40	6998.08
2006/11/13	23:37:34	1097.2	777.5	73.7	180.0	143.6	73.5	309.6	373.4	74.4	72.5	69.7	101.6	61.5	61.6	61.1	61.3	230.10	30.39	6992.74
2006/11/13	23:38:34	1098.3	784.0	73.9	180.2	143.5	73.7	311.1	379.9	74.5	72.6	69.8	101.8	61.2	61.7	61.1	61.2	230.10	30.38	6990.44
2006/11/13	23:39:34	1098.2	778.2	73.9	179.7	143.6	73.7	310.9	378.2	74.6	72.7	69.8	101.8	61.2	61.6	61.0	61.0	230.10	30.40	6997.34
2006/11/13	23:40:34	1098.7	783.7	74.0	180.2	143.8	73.9	313.1	380.1	74.7	72.7	69.9	102.1	61.2	61.7	61.0	61.0	230.20	30.39	6995.78
2006/11/13	23:41:34	1100.1	781.7	74.1	181.5	143.6	73.9	310.1	381.5	74.8	72.8	70.0	102.3	61.4	61.6	61.1	61.1	230.20	30.40	6998.08
2006/11/13	23:42:34	1099.2	777.2	74.2	181.5	144.2	74.0	312.9	380.3	74.8	72.9	70.0	102.1	61.3	61.4	61.0	61.1	230.20	30.41	7000.38
2006/11/13	23:43:34	1099.2	782.1	74.3	180.0	144.1	74.1	311.8	378.7	74.8	72.9	70.0	102.3	61.2	61.6	60.9	61.1	230.20	30.40	6998.08

Heat Rise Test
1st Run

Date	Time	TC1	TC2	TC3	TC4	TC5	TC6	TC7	TC8	TC9	TC10	TC11	TC12	TC13	TC14	TC15	TC16	VDC	Amps	Watts
2006/11/13	23:44:34	1100.2	778.0	74.3	180.9	144.1	74.2	313.6	356.8	74.9	73.1	70.2	102.3	61.1	61.6	60.9	61.0	230.20	30.39	6995.78
2006/11/13	23:45:34	1099.0	780.7	74.4	182.2	144.3	74.2	313.6	379.8	75.1	73.1	70.2	102.6	61.0	61.4	60.9	60.9	230.20	30.40	6998.08
2006/11/13	23:46:34	1099.2	783.2	74.6	181.4	144.5	74.4	315.0	380.4	75.4	73.3	70.3	102.8	61.3	61.4	61.0	61.1	230.20	30.40	7000.38
2006/11/13	23:47:34	1100.0	779.4	74.6	182.0	144.5	74.4	315.5	355.8	75.3	73.3	70.3	102.9	61.1	61.5	60.9	61.0	230.20	30.40	6998.08
2006/11/13	23:48:34	1099.9	780.5	74.7	180.7	144.9	74.5	315.7	360.6	75.3	73.3	70.4	103.0	61.1	61.4	60.9	61.0	230.20	30.40	6998.08
2006/11/13	23:49:34	1099.6	783.3	74.7	181.7	145.0	74.6	315.5	359.8	75.4	73.3	70.6	103.1	61.2	61.4	61.0	61.0	230.30	30.40	7001.12
2006/11/13	23:50:34	1100.1	782.4	74.7	182.0	145.0	74.7	316.1	360.8	75.6	73.6	70.6	103.2	61.0	61.6	60.9	61.1	230.20	30.40	6998.08
2006/11/13	23:51:34	1100.1	778.2	74.8	182.2	145.0	74.7	313.4	362.3	75.6	73.6	70.6	103.3	61.3	61.3	61.0	61.1	230.20	30.41	7000.38
2006/11/13	23:52:34	1100.0	781.2	74.9	182.2	145.3	74.7	314.1	357.9	75.8	73.7	70.6	103.3	60.9	61.6	60.9	61.0	230.10	30.39	6992.74
2006/11/13	23:53:34	1099.7	779.8	74.9	180.7	145.3	74.8	313.6	357.8	76.0	73.7	70.6	103.4	61.1	61.1	60.8	60.9	230.20	30.40	7000.38
2006/11/13	23:54:34	1100.1	783.2	75.1	182.5	145.6	74.9	315.8	356.8	76.0	73.8	70.6	103.4	60.9	60.9	60.6	60.8	230.20	30.40	6998.08
2006/11/13	23:55:34	1100.6	781.3	75.1	183.4	145.8	74.9	314.1	353.1	75.8	73.8	70.6	103.6	61.1	61.1	60.6	61.0	230.20	30.40	6998.08
2006/11/13	23:56:34	1100.6	783.0	75.1	182.7	145.9	75.1	316.9	352.5	76.0	73.9	70.6	103.6	61.0	60.6	60.6	60.6	230.20	30.40	6998.08
2006/11/13	23:57:34	1101.5	779.7	75.3	181.2	146.3	75.1	315.6	360.3	76.0	73.9	70.6	103.7	60.8	60.9	60.6	60.6	230.20	30.38	6993.48
2006/11/13	23:58:34	1102.7	785.5	75.3	182.5	146.1	75.1	316.1	359.4	76.0	73.9	70.8	103.9	60.9	61.2	60.6	60.6	230.20	30.40	6998.08
2006/11/13	23:59:34	1102.4	782.4	75.3	183.0	146.5	75.1	315.8	356.8	76.1	73.9	70.6	103.9	60.8	61.0	60.4	60.6	230.20	30.41	7000.38
2006/11/14	00:00:34	1101.7	784.9	75.3	184.5	145.8	75.4	318.6	357.3	76.2	74.0	70.8	104.0	60.6	60.9	60.6	60.6	230.10	30.40	6997.34
2006/11/14	00:01:34	1102.0	785.9	75.4	184.5	146.1	75.3	316.2	364.8	76.2	74.0	71.1	104.2	60.8	61.0	60.6	60.8	230.10	30.39	6992.74
2006/11/14	00:02:34	1103.0	782.4	75.6	181.7	146.8	75.6	315.9	363.5	76.5	74.1	70.8	104.2	60.9	60.9	60.6	60.6	230.20	30.40	6998.08
2006/11/14	00:03:34	1102.9	784.9	75.6	183.9	146.5	75.6	317.6	363.4	76.4	74.2	70.9	104.3	61.0	60.8	60.6	60.4	230.00	30.38	6987.40
2006/11/14	00:04:34	1102.3	787.2	75.6	183.0	146.3	75.6	317.3	360.5	76.6	74.2	71.1	104.3	60.4	61.2	60.2	60.4	230.20	30.39	6995.78
2006/11/14	00:05:34	1103.3	787.2	75.8	182.4	146.6	75.8	316.9	369.1	76.7	74.3	71.1	104.4	60.6	60.6	60.2	60.4	230.10	30.38	6990.44
2006/11/14	00:06:34	1102.9	784.8	76.0	183.5	146.8	75.8	318.4	366.6	76.8	74.4	71.1	104.6	60.6	60.9	60.2	60.4	229.80	30.34	6972.13
2006/11/14	00:07:34	1103.4	787.0	76.0	184.0	147.0	75.8	321.6	365.1	76.7	74.3	71.3	104.8	60.4	60.8	60.4	60.4	230.20	30.39	6995.78
2006/11/14	00:08:34	1103.1	783.5	76.1	183.5	147.1	76.0	320.4	366.0	76.8	74.5	71.3	104.8	60.6	61.0	60.4	60.6	230.10	30.39	6992.74
2006/11/14	00:09:34	1103.7	779.7	76.1	183.0	147.3	76.0	322.1	363.8	76.9	74.5	71.5	105.1	60.6	61.1	60.4	60.4	230.30	30.41	7003.42
2006/11/14	00:10:34	1102.6	785.9	76.2	183.9	146.8	76.1	320.9	364.6	76.9	74.6	71.5	105.1	60.4	60.9	60.4	60.2	230.20	30.39	6995.78
2006/11/14	00:11:34	1103.4	786.5	76.3	183.5	147.5	76.3	319.9	369.2	77.0	74.6	71.3	105.1	60.4	60.6	60.2	60.1	230.00	30.38	6990.44
2006/11/14	00:12:34	1103.6	784.0	76.4	184.2	147.3	76.3	319.1	354.1	77.2	74.7	71.5	105.3	60.4	60.4	60.1	60.1	230.20	30.40	6998.08
2006/11/14	00:13:34	1104.2	785.5	76.6	186.4	147.0	76.5	321.3	354.3	77.4	75.1	71.7	105.5	60.6	60.9	60.4	60.4	230.20	30.40	7000.38
2006/11/14	00:14:34	1104.3	784.6	76.7	185.0	147.8	76.7	320.6	357.8	77.6	75.3	71.7	105.6	60.9	60.6	60.4	60.6	230.20	30.39	6995.78
2006/11/14	00:15:34	1104.5	787.5	76.8	185.7	148.3	76.8	322.6	360.6	77.8	75.3	71.8	105.6	60.8	60.6	60.4	60.8	230.20	30.40	6998.08
2006/11/14	00:16:34	1104.8	783.3	76.8	184.5	148.2	76.9	321.9	356.0	78.0	75.3	72.0	105.8	61.1	61.3	60.6	60.8	230.20	30.37	6991.18
2006/11/14	00:17:34	1104.9	787.8	77.0	184.0	148.0	76.9	320.1	361.6	78.1	75.6	71.9	105.8	60.6	61.1	60.2	60.6	230.20	30.40	6998.08
2006/11/14	00:18:34	1104.2	786.7	77.0	185.4	148.5	76.9	321.3	361.7	78.0	75.4	71.9	105.8	60.8	60.8	60.2	60.4	230.20	30.40	6998.08
2006/11/14	00:19:34	1105.5	793.0	77.0	185.7	148.2	76.9	320.1	364.3	78.0	75.4	72.1	106.1	60.6	60.6	60.2	60.4	230.10	30.40	6997.34
2006/11/14	00:20:34	1104.5	786.0	77.2	185.7	148.8	77.1	322.9	370.2	78.1	75.6	72.0	106.0	60.6	60.6	60.1	59.7	230.20	30.40	6998.08
2006/11/14	00:21:34	1105.0	789.6	77.3	185.9	148.5	77.3	322.6	370.7	78.3	75.8	72.2	106.2	60.6	60.6	60.4	60.0	230.20	30.40	6998.08
2006/11/14	00:22:34	1104.8	787.3	77.4	186.2	149.2	77.6	324.4	374.2	78.5	75.8	72.1	106.3	60.6	60.6	60.2	60.0	230.10	30.37	6991.18
2006/11/14	00:23:34	1105.2	785.4	77.6	187.0	149.5	77.8	322.7	365.7	78.7	76.2	72.3	106.6	60.6	60.9	60.4	60.4	230.00	30.39	6989.70
2006/11/14	00:24:34	1105.0	792.7	77.8	186.4	149.4	77.8	322.1	342.7	78.9	76.3	72.5	106.8	60.6	61.3	60.6	60.6	230.20	30.41	7000.38
2006/11/14	00:25:34	1105.7	785.3	78.0	187.5	149.4	78.2	324.4	342.6	79.3	76.7	72.6	106.9	61.0	61.4	60.8	60.8	230.20	30.40	6998.08
2006/11/14	00:26:34	1106.1	786.1	78.1	187.2	149.5	78.3	324.5	349.3	79.1	76.8	72.7	107.0	61.0	61.0	60.8	60.6	230.20	30.40	6998.08
2006/11/14	00:27:34	1106.1	786.2	78.2	187.2	150.3	78.5	325.5	349.9	79.6	76.9	72.8	107.2	61.1	61.5	60.9	60.9	230.20	30.38	6993.48
2006/11/14	00:28:34	1105.7	784.1	78.2	185.7	149.8	78.3	326.9	358.1	79.6	76.9	72.9	107.2	61.2	61.1	60.9	60.9	230.20	30.40	6998.08
2006/11/14	00:29:34	1105.3	786.5	78.3	186.0	150.3	78.5	324.7	353.6	79.6	77.0	73.1	107.3	61.0	61.4	60.8	60.6	230.20	30.40	6998.08
2006/11/14	00:30:34	1107.1	790.0	78.3	186.9	150.2	78.7	326.7	359.0	79.8	77.2	73.1	107.4	61.1	61.3	60.6	60.8	230.20	30.40	6998.08
2006/11/14	00:31:34	1106.7	787.7	78.6	187.0	150.6	78.9	324.0	356.3	80.1	77.4	73.1	107.5	61.1	61.6	60.8	60.9	229.60	30.37	6972.95
2006/11/14	00:32:34	1106.5	784.8	78.6	188.0	150.4	79.0	325.6	362.2	80.3	77.6	73.3	107.6	61.1	61.3	60.9	60.9	229.80	30.36	6976.73
2006/11/14	00:33:34	1107.6	794.7	78.9	188.2	150.7	79.2	324.0	363.0	80.5	77.8	73.3	107.8	61.1	61.7	61.0	60.6	230.20	30.39	6995.78
2006/11/14	00:34:34	1108.0	789.1	79.0	187.9	151.3	79.6	327.9	365.6	80.7	78.0	73.3	107.9	61.0	61.6	60.9	61.1	229.90	30.36	6979.76
2006/11/14	00:35:34	1107.0	788.9	79.0	188.7	151.5	79.6	327.1	366.2	80.6	78.1	73.5	108.1	61.1	61.7	61.1	61.2	230.20	30.39	6995.78
2006/11/14	00:36:34	1108.0	793.1	79.2	188.2	151.6	79.8	328.0	368.1	81.0	78.3	73.5	108.1	61.2	61.6	61.1	61.1	230.20	30.39	6995.78
2006/11/14	00:37:34	1108.4	787.5	79.2	188.7	150.8	79.6	326.4	370.6	81.0	78.2	73.5	108.3	60.9	61.3	60.9	61.1	230.10	30.39	6992.74
2006/11/14	00:38:34	1108.3	789.7	79.3	187.5	151.0	79.6	328.1	373.7	81.0	78.3	73.6	108.3	60.8	61.5	60.9	60.8	230.10	30.41	6997.34
2006/11/14	00:39:34	1107.5	790.7	79.3	189.2	151.2	79.8	328.1	368.9	81.1	78.3	73.6	108.3	61.0	61.3	60.9	60.6	230.10	30.39	6995.04

Heat Rise Test
1st Run

Date	Time	TC1	TC2	TC3	TC4	TC5	TC6	TC7	TC8	TC9	TC10	TC11	TC12	TC13	TC14	TC15	TC16	VDC	Amps	Watts
2006/11/14	00:40:34	1108.5	790.9	79.4	187.5	150.9	79.9	329.9	374.4	81.2	78.5	73.7	108.4	60.9	61.3	60.9	60.9	230.20	30.40	6998.08
2006/11/14	00:41:34	1108.7	793.0	79.6	187.7	151.5	80.1	328.8	379.3	81.4	78.7	73.8	108.6	61.1	61.5	60.9	60.8	230.20	30.39	6998.82
2006/11/14	00:42:34	1108.7	791.2	79.6	188.5	151.7	80.1	327.4	372.6	81.5	78.7	73.9	108.6	61.2	61.4	60.9	60.9	230.20	30.40	6998.08
2006/11/14	00:43:34	1108.0	794.3	79.6	188.5	152.1	80.1	328.9	375.2	81.5	78.7	74.0	108.8	61.1	61.7	61.0	60.8	230.20	30.39	6995.78
2006/11/14	00:44:34	1108.2	788.7	79.8	188.7	152.5	80.3	328.4	372.3	81.6	78.7	74.1	109.0	61.2	61.6	61.1	61.3	230.20	30.38	6993.48
2006/11/14	00:45:34	1108.2	794.7	79.9	188.5	152.0	80.3	328.7	372.1	81.8	78.9	74.0	109.0	61.2	61.5	61.1	61.1	230.20	30.38	6993.48
2006/11/14	00:46:34	1108.5	787.2	79.9	190.5	152.2	80.5	331.1	374.2	81.8	79.0	74.2	109.1	61.2	61.7	61.0	61.1	230.10	30.40	6995.04
2006/11/14	00:47:34	1109.0	796.2	80.1	189.2	152.6	80.6	329.1	380.1	81.9	79.0	74.2	109.1	61.1	61.5	60.9	60.9	230.10	30.40	6995.04
2006/11/14	00:48:34	1108.3	795.2	80.1	189.0	151.7	80.7	329.8	380.1	81.8	79.1	74.4	109.3	61.4	61.7	61.0	61.1	230.20	30.40	6998.08
2006/11/14	00:49:34	1109.2	787.5	80.3	189.9	152.2	80.9	330.3	379.4	82.1	79.3	74.5	109.3	61.3	61.5	61.0	61.3	230.20	30.39	6998.08
2006/11/14	00:50:34	1109.3	794.7	80.3	189.0	152.7	81.1	331.1	374.5	82.3	79.6	74.5	109.5	61.4	61.6	61.1	61.3	230.20	30.39	6995.78
2006/11/14	00:51:34	1109.3	790.9	80.5	189.5	152.4	81.2	330.4	376.8	82.6	79.8	74.6	109.6	61.2	61.7	61.1	61.4	230.20	30.39	6995.78
2006/11/14	00:52:34	1109.7	793.1	80.6	190.7	153.0	81.2	331.6	373.2	82.4	79.8	74.6	109.7	61.5	61.6	61.2	61.2	230.00	30.39	6992.00
2006/11/14	00:53:34	1109.6	792.8	80.8	189.7	153.1	81.4	332.2	315.8	82.8	79.8	74.8	109.9	61.1	61.6	61.2	61.2	230.20	30.40	6998.08
2006/11/14	00:54:34	1110.3	792.2	80.8	190.2	153.0	81.4	331.5	314.1	83.0	80.1	74.9	110.0	61.3	61.5	61.1	61.1	230.20	30.40	6998.08
2006/11/14	00:55:34	1109.7	788.3	80.9	190.5	153.1	81.5	332.5	317.3	83.0	80.1	74.9	110.0	61.1	61.6	61.0	61.1	229.80	30.37	6979.03
2006/11/14	00:56:34	1110.7	791.4	81.1	189.9	153.6	81.7	330.4	320.1	83.2	80.1	75.1	110.2	61.4	61.4	61.2	61.0	230.20	30.40	6998.08
2006/11/14	00:57:34	1111.5	792.2	81.1	189.0	153.8	81.8	331.9	320.5	83.2	80.3	75.1	110.3	61.3	61.5	61.2	61.2	230.20	30.40	6998.08
2006/11/14	00:58:34	1111.1	789.4	81.3	191.0	153.8	81.8	333.4	322.7	83.3	80.3	75.3	110.4	61.5	61.7	61.2	61.2	230.10	30.40	6995.04
2006/11/14	00:59:34	1111.0	794.1	81.4	191.0	154.0	81.9	333.9	327.7	83.4	80.3	75.1	110.4	61.3	61.5	61.1	61.2	230.00	30.38	6987.40
2006/11/14	01:00:34	1111.4	793.3	81.4	189.0	153.4	82.1	334.4	324.8	83.4	80.3	75.3	110.6	61.3	61.6	61.2	61.3	230.10	30.39	6992.74
2006/11/14	01:01:34	1111.0	794.5	81.5	188.7	153.3	82.1	332.4	329.5	83.6	80.5	75.3	110.6	61.3	61.6	61.2	61.2	230.20	30.38	6993.48
2006/11/14	01:02:34	1111.8	796.5	81.6	189.7	153.5	82.1	332.9	327.2	83.7	80.7	75.3	110.6	61.4	61.5	61.1	61.2	230.20	30.38	6993.48
2006/11/14	01:03:34	1110.7	793.3	81.8	189.2	154.1	82.4	333.8	333.7	83.8	80.8	75.6	110.9	61.7	61.9	61.3	61.5	230.20	30.41	7000.38
2006/11/14	01:04:34	1110.9	794.4	81.8	190.9	154.0	82.4	335.7	333.0	83.8	80.9	75.6	110.8	61.0	61.1	60.8	60.4	230.20	30.39	6995.78
2006/11/14	01:05:34	1110.9	792.0	81.9	190.4	154.4	82.8	332.4	333.5	84.1	81.1	75.6	111.0	60.9	61.1	60.6	60.6	230.20	30.40	6998.08
2006/11/14	01:06:34	1112.1	794.5	81.9	191.5	153.9	82.8	334.6	336.1	84.2	81.1	75.6	111.0	60.6	61.1	60.4	60.6	230.20	30.39	6995.78
2006/11/14	01:07:34	1112.0	793.1	81.9	190.5	153.9	82.8	331.9	338.3	84.2	81.2	75.8	111.0	61.3	61.3	60.6	60.6	230.20	30.39	6995.78
2006/11/14	01:08:34	1112.5	797.2	82.1	190.2	154.0	82.8	334.0	341.3	84.4	81.3	75.8	111.2	61.2	61.6	61.0	61.0	230.20	30.39	6995.78
2006/11/14	01:09:34	1111.7	793.1	82.3	191.5	154.2	83.0	335.2	340.2	84.6	81.5	76.1	111.4	61.2	61.6	61.1	61.0	230.10	30.40	6995.04
2006/11/14	01:10:34	1113.1	790.4	82.4	191.4	154.9	83.1	335.2	337.4	84.8	81.6	76.1	111.6	61.2	61.6	61.0	61.2	230.20	30.39	6998.08
2006/11/14	01:11:34	1112.7	795.5	82.6	192.0	154.9	83.3	334.8	338.8	84.9	81.7	76.1	111.6	61.1	61.4	61.1	61.1	230.20	30.36	6991.91
2006/11/14	01:12:34	1112.5	791.7	82.8	192.5	155.1	83.5	334.9	339.6	85.1	81.9	76.3	111.7	61.8	61.5	61.3	61.4	230.20	30.39	6998.08
2006/11/14	01:13:34	1112.7	799.4	82.8	191.5	155.4	83.7	335.7	341.5	85.1	82.1	76.3	111.8	61.4	61.5	61.3	61.3	230.20	30.40	6998.08
2006/11/14	01:14:34	1113.3	797.3	83.0	192.5	155.0	83.8	336.4	340.2	85.3	82.1	76.6	111.9	61.4	61.9	61.2	61.4	230.20	30.40	6998.08
2006/11/14	01:15:34	1113.2	790.9	83.1	192.0	155.0	83.9	337.5	339.1	85.6	82.1	76.4	111.8	61.1	61.3	61.1	61.1	230.20	30.39	6995.78
2006/11/14	01:16:34	1113.0	797.0	83.1	192.7	155.3	83.9	336.9	338.3	85.6	82.3	76.6	112.1	61.8	61.8	61.3	61.3	230.20	30.39	6995.78
2006/11/14	01:17:34	1113.7	800.7	83.2	192.5	155.4	84.2	337.2	337.5	85.7	82.3	76.7	112.3	61.8	62.1	61.6	61.4	230.20	30.40	6998.08
2006/11/14	01:18:34	1113.4	796.7	83.3	192.5	155.3	84.4	335.5	343.7	85.9	82.6	76.8	112.3	61.7	62.0	61.5	61.6	230.20	30.39	6998.08
2006/11/14	01:19:34	1113.6	796.7	83.4	192.0	155.3	84.4	339.1	339.9	86.0	82.8	76.9	112.5	61.3	61.9	61.4	61.6	230.20	30.39	6995.78
2006/11/14	01:20:34	1114.4	798.1	83.5	192.9	155.8	84.4	335.5	344.8	86.1	82.8	76.8	112.5	61.3	61.8	61.4	61.5	230.10	30.39	6992.74
2006/11/14	01:21:34	1113.6	788.6	83.6	191.9	156.3	84.6	336.1	344.2	86.2	82.8	76.8	112.6	61.2	61.5	61.2	61.2	230.10	30.38	6990.44
2006/11/14	06:59:12	1145.2	833.4	117.5	216.0	178.2	120.8	388.3	426.3	123.1	117.0	106.5	140.4	62.4	62.6	61.9	62.2	230.20	30.39	6995.78
2006/11/14	07:00:12	1146.2	826.6	117.6	217.0	178.0	121.0	387.6	427.5	123.1	117.1	106.6	140.5	62.6	62.4	62.4	61.8	230.20	30.38	6993.48
2006/11/14	07:01:12	1145.6	829.4	117.7	215.9	177.8	121.3	388.7	426.1	123.2	117.0	106.6	140.7	62.2	62.3	62.0	61.7	230.10	30.38	6990.44
2006/11/14	07:02:12	1145.6	830.2	117.9	216.0	178.0	121.5	387.6	426.7	123.2	117.3	106.7	140.7	62.8	61.9	61.9	61.9	230.20	30.39	6995.78
2006/11/14	07:03:12	1145.3	830.7	118.0	215.5	177.8	121.1	387.8	423.2	123.5	117.3	106.8	140.8	62.4	62.2	62.2	61.8	230.20	30.38	6993.48
2006/11/14	07:04:12	1145.9	834.0	118.1	216.9	178.0	121.5	388.9	426.4	123.5	117.5	106.9	140.9	62.2	61.9	62.0	61.9	230.20	30.38	6993.48
2006/11/14	07:05:12	1145.4	834.2	118.1	215.5	178.0	121.7	389.0	428.5	123.8	117.5	107.0	140.9	62.6	61.8	62.2	62.2	230.20	30.38	6993.48
2006/11/14	07:06:12	1145.2	830.6	118.2	216.7	178.2	121.7	386.3	425.8	123.7	117.5	107.0	141.0	62.8	62.4	62.1	62.1	230.20	30.38	6993.48
2006/11/14	07:07:12	1146.4	832.4	118.4	214.6	178.5	121.7	388.8	428.5	124.0	117.7	107.0	141.0	62.6	61.9	62.1	61.8	230.20	30.38	6993.48
2006/11/14	07:08:12	1146.3	828.9	118.4	217.8	178.0	121.7	388.8	429.0	123.7	117.7	107.0	141.0	62.8	61.5	62.3	61.8	230.10	30.38	6990.44
2006/11/14	07:09:12	1146.6	834.5	118.5	215.4	178.2	121.8	390.3	429.3	124.3	117.9	107.3	141.2	62.0	62.6	62.1	62.0	230.20	30.38	6993.48
2006/11/14	07:10:12	1146.3	828.6	118.7	217.5	178.7	121.8	390.1	447.1	124.6	117.8	107.2	141.2	62.6	62.3	61.8	61.9	230.10	30.37	6988.14
2006/11/14	07:11:12	1147.6	835.0	118.8	216.2	179.4	122.0	388.2	445.2	124.7	118.3	107.5	141.4	62.8	62.8	62.2	62.2	230.20	30.38	6993.48
2006/11/14	07:12:12	1147.2	834.5	118.9	216.0	179.0	122.2	389.5	441.4	124.9	118.3	107.5	141.5	62.8	63.1	62.4	62.4	230.20	30.38	6993.48

Heat Rise Test
1st Run

Date	Time	TC1	TC2	TC3	TC4	TC5	TC6	TC7	TC8	TC9	TC10	TC11	TC12	TC13	TC14	TC15	TC16	VDC	Amps	Watts
2006/11/14	07:13:12	1146.5	832.9	119.0	218.3	178.5	122.2	390.6	448.0	124.6	118.4	107.5	141.5	62.2	61.7	62.2	62.1	230.20	30.38	6993.48
2006/11/14	07:14:12	1147.4	828.4	119.0	216.9	179.0	122.3	389.0	444.8	124.7	118.4	107.7	141.6	62.1	61.7	62.0	61.9	230.20	30.39	6995.78
2006/11/14	07:15:12	1147.7	826.0	119.2	216.5	178.8	122.3	389.0	445.4	124.7	118.4	107.6	141.7	62.3	61.5	62.0	62.2	230.20	30.38	6993.48
2006/11/14	07:16:12	1146.9	836.0	119.2	218.2	179.2	122.3	392.5	441.5	124.7	118.4	107.8	141.7	62.2	61.7	62.0	62.2	230.20	30.38	6993.48
2006/11/14	07:17:12	1147.4	836.8	119.3	217.2	178.7	122.5	390.0	446.3	124.6	118.7	107.9	141.7	62.3	61.8	62.1	61.9	229.90	30.36	6979.76
2006/11/14	07:18:12	1147.2	835.7	119.6	217.3	179.4	122.9	393.0	448.3	125.1	118.7	107.9	141.7	62.0	61.8	61.8	61.8	230.00	30.35	6980.50
2006/11/14	07:19:12	1147.7	828.9	119.6	216.7	178.8	122.9	389.7	449.2	125.0	118.7	108.1	141.9	62.3	61.6	62.1	62.0	230.20	30.38	6993.48
2006/11/14	07:20:12	1146.9	831.5	119.8	217.0	179.0	123.2	390.4	451.0	125.3	118.9	108.1	142.0	62.3	61.8	62.3	62.2	230.20	30.39	6995.78
2006/11/14	07:21:12	1147.2	832.4	119.8	219.2	179.5	122.9	391.1	452.5	125.1	119.0	108.3	142.0	62.2	61.7	62.1	62.0	230.20	30.38	6993.48
2006/11/14	07:22:12	1147.1	834.7	120.1	217.5	179.2	123.3	391.5	445.1	125.6	119.1	108.3	142.1	62.0	61.9	61.9	61.8	230.20	30.39	6995.78
2006/11/14	07:22:34	1146.5	832.9	120.0	218.0	178.7	123.4	391.4	449.7	125.4	118.8	108.3	142.2	62.1	63.2	62.1	61.8	230.10	30.38	6990.44
2006/11/14	07:23:34	1146.9	828.4	120.1	217.7	179.2	123.6	390.0	450.0	125.6	119.3	108.6	142.3	62.8	61.8	62.2	62.0	230.20	30.38	6993.48
2006/11/14	07:24:34	1148.6	832.1	120.1	216.7	179.2	123.4	392.5	448.5	125.6	119.4	108.6	142.4	62.4	61.6	62.2	61.8	230.20	30.38	6993.48
2006/11/14	07:25:34	1147.6	832.1	120.3	218.3	179.7	123.5	391.6	449.8	125.8	119.6	108.6	142.4	61.9	61.4	61.9	61.9	230.20	30.39	6995.78
2006/11/14	07:26:34	1146.8	834.8	120.3	217.8	179.0	123.4	390.1	448.4	125.8	119.4	108.6	142.4	62.3	61.4	62.1	62.0	230.20	30.39	6995.78
2006/11/14	07:27:34	1147.8	832.0	120.5	218.2	179.5	123.7	392.5	451.0	126.1	119.6	108.8	142.5	62.0	61.5	61.9	62.1	230.10	30.38	6990.44
2006/11/14	07:28:34	1147.4	836.6	120.5	220.5	179.4	123.9	391.1	450.0	126.0	119.6	108.8	142.6	62.3	61.7	62.0	62.2	230.10	30.38	6990.44
2006/11/14	07:29:34	1147.6	835.8	120.6	217.0	179.7	123.8	391.7	453.3	125.8	119.6	109.0	142.7	62.3	62.4	62.2	61.9	230.20	30.39	6995.78
2006/11/14	07:30:34	1147.8	831.8	120.8	217.7	180.0	124.1	389.6	452.9	126.1	119.8	109.0	142.7	62.2	61.7	62.0	61.7	230.20	30.38	6993.48
2006/11/14	07:31:34	1148.1	835.1	120.8	217.8	179.0	123.8	392.7	448.9	126.3	119.9	109.1	142.8	62.1	61.5	61.9	61.5	229.60	30.37	6972.95
2006/11/14	07:32:34	1148.9	831.3	121.0	218.0	179.5	123.9	392.2	449.7	126.5	119.9	109.1	142.9	62.0	61.6	61.9	61.8	230.20	30.38	6993.48
2006/11/14	07:33:34	1147.5	829.7	121.1	218.8	179.4	124.1	391.1	450.1	126.5	119.8	109.1	142.9	63.2	61.5	62.2	61.8	230.20	30.38	6993.48
2006/11/14	07:34:34	1147.9	832.3	121.3	218.7	179.5	124.1	391.9	454.1	126.8	120.0	109.3	143.1	62.2	61.5	62.2	62.1	230.20	30.38	6993.48
2006/11/14	07:35:34	1149.4	831.5	121.3	217.5	180.2	124.2	393.8	450.3	126.8	120.3	109.3	143.1	62.2	61.5	62.1	62.1	230.20	30.38	6993.48
2006/11/14	07:36:34	1147.4	834.2	121.3	219.8	180.0	124.5	393.6	449.5	126.8	120.3	109.6	143.2	62.3	61.5	62.2	61.7	229.90	30.37	6982.06
2006/11/14	07:37:34	1147.8	832.7	121.5	217.7	180.0	124.5	390.6	454.1	126.8	120.3	109.7	143.3	62.3	62.1	62.1	61.8	230.20	30.38	6993.48
2006/11/14	07:38:34	1147.4	834.9	121.8	219.1	180.5	124.9	392.7	456.8	127.2	120.6	109.7	143.4	62.2	62.1	62.2	61.9	230.10	30.38	6992.74
2006/11/14	07:39:34	1148.8	832.9	121.8	219.0	180.2	125.3	393.2	454.1	127.0	120.8	109.9	143.5	62.2	61.6	61.9	61.7	230.10	30.37	6988.14
2006/11/14	07:40:34	1148.2	835.6	121.8	217.8	180.4	125.1	391.4	453.8	127.4	120.8	109.9	143.6	62.6	62.2	62.3	61.8	230.10	30.38	6990.44
2006/11/14	07:41:34	1149.2	835.4	122.0	218.3	180.7	125.1	395.2	449.5	127.4	121.0	110.0	143.7	62.2	61.5	62.1	61.8	230.20	30.38	6995.78
2006/11/14	07:42:34	1148.2	837.2	122.0	218.2	180.2	125.3	393.5	447.1	127.8	121.1	110.1	143.7	62.4	61.6	62.1	62.0	230.20	30.37	6991.18
2006/11/14	07:43:34	1148.6	831.5	122.3	218.2	180.5	125.4	392.7	451.2	127.9	121.3	110.1	143.8	62.4	61.5	62.2	62.1	230.20	30.38	6993.48
2006/11/14	07:44:34	1149.2	833.1	122.3	218.3	180.7	125.5	394.0	451.3	128.0	121.3	110.3	143.9	62.4	62.4	62.1	61.6	230.20	30.38	6993.48
2006/11/14	07:45:34	1148.9	836.1	122.5	218.7	180.9	125.4	394.0	452.5	127.9	121.3	110.3	143.9	62.2	62.3	62.2	62.0	230.10	30.38	6990.44
2006/11/14	07:46:34	1148.4	837.9	122.5	219.5	180.5	126.0	395.2	448.4	128.4	121.5	110.4	144.1	62.6	62.2	62.6	62.1	230.20	30.38	6993.48
2006/11/14	07:47:34	1148.8	836.7	122.7	219.0	181.5	126.1	394.1	450.0	128.7	122.0	110.6	144.2	62.4	62.6	62.6	62.4	230.10	30.37	6988.14
2006/11/14	07:48:34	1149.2	834.5	122.8	220.6	181.5	126.0	393.2	453.2	128.7	122.0	110.6	144.3	63.0	62.6	62.6	62.4	230.20	30.38	6993.48
2006/11/14	07:49:34	1149.9	833.4	122.9	220.0	181.4	126.5	396.3	452.4	128.7	122.3	110.7	144.3	62.6	62.6	62.6	62.8	230.20	30.38	6993.48
2006/11/14	07:50:34	1150.4	838.4	122.9	220.0	180.7	126.3	394.9	452.0	128.4	122.0	110.9	144.5	61.9	61.1	62.0	61.3	230.20	30.38	6993.48
2006/11/14	07:51:34	1149.7	836.5	123.0	220.7	181.2	126.1	394.9	446.6	128.4	122.0	110.8	144.3	60.6	61.3	60.9	61.3	230.20	30.38	6993.48
2006/11/14	07:52:34	1150.2	834.2	123.0	219.1	180.7	125.8	394.6	448.3	128.4	121.8	110.9	144.4	60.1	58.9	60.8	59.6	230.20	30.37	6991.18
2006/11/14	07:53:34	1149.4	836.7	122.9	219.0	180.2	125.8	395.4	451.8	128.3	121.5	110.8	144.2	60.4	59.6	60.1	59.7	230.20	30.37	6991.18
2006/11/14	07:54:34	1149.4	836.5	122.9	218.0	180.5	126.0	395.2	447.9	128.4	121.7	110.8	144.3	60.6	59.6	60.4	60.2	230.20	30.37	6993.48
2006/11/14	07:55:34	1150.2	837.9	123.2	221.4	181.4	126.3	394.6	443.1	128.5	122.2	111.1	144.4	61.1	61.0	61.1	60.4	230.10	30.37	6988.14
2006/11/14	07:56:34	1150.1	838.8	123.2	220.8	181.2	126.3	395.2	454.5	128.7	122.0	111.2	144.5	61.0	60.0	60.9	60.4	230.10	30.37	6988.14
2006/11/14	07:57:34	1149.9	837.4	123.5	220.3	181.2	126.3	395.3	443.7	128.9	122.3	111.3	144.7	61.0	59.8	60.9	60.4	230.20	30.39	6995.78
2006/11/14	07:58:34	1150.0	842.0	123.8	220.8	181.5	126.7	396.8	446.5	129.1	122.4	111.6	144.8	60.6	60.1	61.0	60.0	229.40	30.30	6950.82
2006/11/14	07:59:34	1150.4	836.7	124.2	220.5	181.7	126.8	396.8	449.5	129.1	122.7	111.6	144.9	60.6	59.8	60.6	59.4	230.20	30.33	6985.00
2006/11/14	08:00:34	1150.2	833.4	124.6	220.9	182.2	127.0	393.8	447.9	129.2	122.5	111.7	145.0	61.0	60.0	61.0	60.1	230.20	30.38	6993.48
2006/11/14	08:01:34	1150.4	843.0	125.1	219.8	182.0	127.2	397.8	446.3	129.9	123.0	111.8	145.1	61.1	60.4	60.9	60.6	230.10	30.37	6988.14
2006/11/14	08:02:34	1150.4	839.4	125.4	220.0	182.0	127.4	397.9	447.7	129.3	123.3	111.9	145.3	61.5	60.1	60.6	60.0	230.10	30.38	6990.44
2006/11/14	08:03:34	1151.4	841.1	125.8	220.0	181.2	127.3	399.9	442.6	129.7	123.2	111.9	145.3	60.4	60.4	60.2	60.2	229.60	30.36	6970.66
2006/11/14	08:04:34	1150.9	835.5	126.1	220.5	181.7	127.0	397.6	451.2	129.7	123.3	112.1	145.4	60.4	59.7	60.4	59.6	230.20	30.38	6993.48
2006/11/14	08:05:34	1150.6	842.7	126.8	220.6	181.9	127.9	397.3	449.0	130.2	123.6	112.3	145.5	60.2	59.9	60.2	60.0	230.20	30.38	6993.48
2006/11/14	08:06:34	1150.8	841.2	127.0	220.5	182.4	127.5	397.6	449.0	130.0	123.4	112.3	145.8	60.6	59.9	60.6	59.7	230.10	30.34	6981.23
2006/11/14	08:07:34	1152.5	838.2	127.5	219.2	181.9	127.8	397.3	451.4	130.2	123.8	112.5	145.8	60.0	60.2	60.4	60.1	230.20	30.37	6991.18

Heat Rise Test
1st Run

Date	Time	TC1	TC2	TC3	TC4	TC5	TC6	TC7	TC8	TC9	TC10	TC11	TC12	TC13	TC14	TC15	TC16	VDC	Amps	Watts
2006/11/14	08:08:34	1152.1	839.4	127.8	221.0	182.2	127.9	398.2	442.8	130.6	124.0	112.3	145.6	61.3	60.8	60.6	61.0	230.20	30.38	6993.48
2006/11/14	08:09:34	1151.4	839.8	128.3	221.6	182.2	128.3	396.0	446.8	130.2	124.1	112.5	145.8	61.5	61.9	61.3	61.4	230.10	30.37	6988.14
2006/11/14	08:10:34	1151.4	840.7	128.6	221.4	182.7	128.3	396.3	448.8	130.9	124.2	112.6	145.8	62.2	62.3	61.8	61.5	230.20	30.36	6988.87
2006/11/14	08:11:34	1151.4	846.5	129.0	221.8	183.0	128.3	396.8	447.4	131.3	124.5	112.8	146.0	61.7	62.3	61.9	61.8	230.20	30.36	6988.87
2006/11/14	08:12:34	1153.2	836.6	129.5	219.0	182.7	128.5	396.4	447.5	131.5	124.5	112.8	146.0	62.4	62.6	61.9	61.8	230.20	30.37	6993.48
2006/11/14	08:13:34	1152.2	842.9	129.9	220.2	183.2	128.6	397.3	444.6	131.5	124.8	112.8	146.1	62.6	62.6	62.0	62.2	230.00	30.33	6975.90
2006/11/14	08:14:34	1153.2	838.8	130.2	220.5	182.9	128.7	398.3	448.1	131.5	124.9	113.0	146.3	63.2	62.8	62.2	62.3	230.10	30.38	6990.44
2006/11/14	08:15:34	1152.5	839.9	130.6	222.7	183.4	129.0	398.6	443.4	131.6	124.9	113.1	146.3	63.2	62.8	62.6	62.6	230.20	30.38	6993.48
2006/11/14	08:16:34	1153.8	842.2	131.1	220.6	183.0	129.0	397.6	447.3	131.8	125.3	113.2	146.5	63.2	62.8	62.2	62.6	230.10	30.37	6988.14
2006/11/14	08:17:34	1153.4	838.8	131.3	221.2	181.7	129.0	399.2	448.9	131.5	124.9	113.3	146.5	62.8	62.3	62.6	62.2	230.20	30.37	6991.18
2006/11/14	08:18:34	1152.4	844.0	131.5	221.2	182.7	128.9	396.4	452.5	131.5	124.9	113.3	146.5	62.8	61.9	62.0	61.9	230.20	30.38	6993.48
2006/11/14	08:19:34	1153.1	844.2	131.8	220.5	183.0	128.8	399.2	445.8	131.5	125.0	113.2	146.3	62.2	61.8	61.8	61.6	230.10	30.38	6990.44
2006/11/14	08:20:34	1153.2	844.4	132.3	220.2	183.2	129.2	399.6	449.0	131.8	125.1	113.3	146.5	62.8	62.2	61.9	61.9	230.10	30.39	6995.04
2006/11/14	08:21:34	1153.9	845.6	132.7	221.1	183.2	129.4	400.5	453.3	132.0	125.3	113.3	146.5	63.0	62.6	62.2	62.6	230.20	30.37	6991.18
2006/11/14	08:22:34	1152.4	841.4	133.0	221.9	183.5	129.5	399.2	451.6	132.3	125.5	113.6	146.6	62.8	62.8	62.4	62.4	230.10	30.38	6990.44
2006/11/14	08:23:34	1152.7	841.7	133.4	222.8	183.5	129.8	399.8	451.6	132.5	125.8	113.6	146.8	62.4	62.8	62.4	62.6	230.10	30.38	6990.44
2006/11/14	08:24:34	1153.2	840.5	133.8	222.6	183.7	129.9	397.8	455.1	132.5	126.0	113.7	147.0	63.2	63.1	62.8	62.8	230.20	30.37	6993.48
2006/11/14	08:25:34	1153.2	846.2	134.1	220.1	183.7	129.8	398.7	452.0	132.5	126.0	113.9	147.0	63.5	63.3	63.0	63.0	230.10	30.38	6990.44
2006/11/14	08:26:34	1152.7	840.9	134.3	221.2	183.5	129.8	401.4	452.5	132.3	125.8	114.1	147.0	62.8	62.1	61.9	61.6	230.10	30.37	6988.14
2006/11/14	08:27:34	1153.2	842.8	134.4	221.5	183.7	129.8	402.1	449.3	132.7	125.8	114.0	147.0	61.9	61.7	61.9	61.7	230.20	30.38	6996.51
2006/11/14	08:28:34	1153.4	838.2	134.7	222.0	183.9	129.8	401.1	453.3	132.7	125.8	114.0	147.0	62.0	62.3	62.3	61.7	230.10	30.37	6988.14
2006/11/14	08:29:34	1153.4	839.4	135.0	221.9	183.7	129.9	399.6	449.5	133.0	126.0	114.1	147.1	62.6	62.6	62.2	62.0	230.20	30.37	6991.18
2006/11/14	08:30:34	1153.7	840.6	135.3	222.9	183.0	130.1	398.9	452.3	132.9	126.3	114.2	147.3	62.3	62.3	62.4	62.1	230.10	30.38	6990.44
2006/11/14	08:31:34	1153.4	841.4	135.6	222.6	183.7	130.4	401.1	453.3	133.0	126.1	114.4	147.3	62.6	62.8	62.6	62.3	229.90	30.36	6979.76
2006/11/14	08:32:34	1154.1	839.4	135.8	221.8	183.7	130.6	399.7	451.2	133.4	126.5	114.5	147.5	62.4	63.3	62.8	62.4	230.10	30.37	6988.14
2006/11/14	08:33:34	1153.4	843.5	136.2	220.8	184.0	130.4	401.1	451.1	133.4	126.7	114.4	147.5	62.0	63.2	62.6	62.6	230.20	30.36	6988.87
2006/11/14	08:34:34	1154.1	848.3	136.4	222.9	183.9	130.8	399.0	450.6	133.9	127.0	114.7	147.7	62.8	63.3	62.8	62.8	230.20	30.38	6993.48
2006/11/14	08:35:34	1154.2	840.4	136.6	221.6	184.2	130.8	400.3	453.8	133.5	126.8	114.6	147.7	62.6	63.2	62.6	62.6	230.10	30.38	6992.74
2006/11/14	08:36:34	1154.4	844.4	136.8	223.2	184.0	130.9	401.6	449.8	133.7	126.8	114.9	147.8	63.2	63.4	63.2	63.0	230.20	30.37	6991.18
2006/11/14	08:37:34	1154.4	844.9	136.9	221.6	183.5	130.8	402.7	452.7	133.0	126.8	114.9	147.8	62.6	62.8	62.6	62.0	230.10	30.35	6983.54
2006/11/14	08:38:34	1154.2	844.7	137.3	223.6	183.5	130.1	400.3	448.4	133.2	126.5	115.0	148.0	61.4	60.2	61.3	60.8	230.00	30.36	6982.80
2006/11/14	08:39:34	1154.7	845.1	137.3	222.6	183.7	130.8	402.3	452.5	133.4	126.5	114.9	147.8	61.9	62.3	61.5	60.8	230.10	30.38	6990.44
2006/11/14	08:40:34	1154.7	847.3	137.3	222.9	183.7	130.8	399.9	448.6	133.5	127.0	114.9	147.8	62.0	62.2	61.8	61.5	230.20	30.31	6983.42
2006/11/14	08:41:34	1154.2	845.9	137.5	221.9	183.4	130.6	401.1	451.6	133.5	127.0	115.0	147.8	61.9	62.0	61.8	61.7	230.20	30.37	6991.18
2006/11/14	08:42:34	1154.4	843.7	137.8	222.0	182.9	130.9	398.9	450.4	133.8	126.8	114.9	147.8	61.5	62.0	61.9	61.7	229.90	30.35	6977.47
2006/11/14	08:43:34	1154.9	844.5	137.8	222.5	183.0	130.8	400.6	454.9	133.5	126.8	115.1	147.8	60.6	61.5	60.9	61.0	230.20	30.37	6991.18
2006/11/14	08:44:34	1153.7	838.9	138.0	221.0	184.2	131.0	399.7	454.0	133.5	127.2	115.0	147.8	61.4	61.8	61.7	61.1	230.10	30.37	6990.44
2006/11/14	08:45:34	1153.4	842.5	138.3	222.8	184.0	131.1	401.4	450.9	134.1	127.4	115.1	148.0	61.7	61.9	61.9	61.7	230.10	30.39	6992.74
2006/11/14	08:46:34	1155.2	848.4	138.5	222.4	184.2	131.3	399.5	452.5	134.0	127.2	115.4	148.2	61.6	61.4	61.8	61.1	230.10	30.37	6988.14
2006/11/14	08:47:34	1154.1	841.7	138.6	223.1	183.7	131.5	402.5	453.3	134.3	127.3	115.6	148.3	61.5	60.6	61.3	60.8	230.10	30.38	6995.04
2006/11/14	08:48:34	1154.8	845.2	138.8	221.8	184.0	131.6	400.8	452.8	134.3	127.5	115.8	148.5	61.9	61.1	61.2	61.2	230.20	30.38	6998.08
2006/11/14	08:49:34	1155.1	847.3	139.0	222.4	184.7	131.8	405.1	455.0	134.4	127.7	115.8	148.5	61.8	61.7	61.7	61.9	230.10	30.37	6988.14
2006/11/14	08:50:34	1155.2	845.2	139.2	223.5	184.5	132.0	401.6	455.8	134.3	128.0	115.8	148.7	62.0	61.2	62.1	61.5	229.90	30.35	6977.47
2006/11/14	08:51:34	1155.0	842.4	139.3	222.8	184.5	131.8	401.7	454.3	134.5	127.9	116.1	148.9	62.2	61.6	62.2	61.4	230.20	30.38	6993.48
2006/11/14	08:52:34	1154.7	846.7	139.5	221.5	184.4	131.8	401.7	452.3	134.5	128.0	116.1	148.9	62.3	62.2	62.0	61.7	230.30	30.35	6989.61
2006/11/14	08:53:34	1155.4	849.7	139.5	221.7	184.2	132.0	402.1	456.2	134.5	128.0	116.1	149.0	62.2	61.6	62.3	61.3	230.20	30.38	6993.48
2006/11/14	08:54:34	1155.8	840.4	139.7	222.9	184.0	132.0	401.0	450.8	134.3	127.9	116.1	148.9	62.0	61.6	61.9	60.8	229.90	30.32	6970.57
2006/11/14	08:55:34	1155.7	850.0	139.7	224.0	184.7	132.5	400.8	456.2	134.9	128.0	116.1	149.0	62.2	61.7	61.9	61.2	230.20	30.37	6993.48
2006/11/14	08:56:34	1155.4	844.9	140.0	223.4	185.2	132.5	404.9	458.7	135.1	128.4	116.3	149.0	62.4	61.5	62.3	61.8	230.00	30.26	6959.80
2006/11/14	08:57:34	1156.4	847.5	140.2	222.8	184.9	132.7	403.5	453.5	135.2	128.7	116.5	149.2	62.3	62.3	62.6	62.0	230.20	30.38	6993.48
2006/11/14	08:58:34	1157.4	845.9	140.3	223.7	184.5	132.9	403.5	457.1	135.3	128.7	116.6	149.4	62.4	62.6	62.4	62.2	229.80	30.35	6974.43
2006/11/14	08:59:34	1156.4	846.2	140.4	224.4	185.2	133.0	402.2	457.3	135.5	129.0	116.6	149.3	62.6	62.6	62.3	62.2	230.20	30.37	6991.18
2006/11/14	09:00:34	1157.5	845.9	140.5	223.8	185.5	133.0	404.3	457.9	135.8	129.0	116.6	149.4	62.3	62.6	62.3	62.3	230.20	30.38	6993.48
2006/11/14	09:01:34	1157.1	847.0	140.7	222.5	186.0	133.5	403.1	457.5	135.9	129.1	116.8	149.5	62.8	62.4	62.8	62.3	230.20	30.37	6991.18
2006/11/14	09:02:34	1156.2	846.8	140.7	224.6	185.5	133.3	404.1	454.8	136.1	129.2	116.8	149.5	62.4	62.4	62.6	62.2	230.10	30.38	6990.44
2006/11/14	09:03:34	1156.7	846.3	140.9	223.1	185.9	133.4	404.3	456.7	135.9	129.3	117.1	149.7	62.8	62.8	62.8	62.4	230.00	30.37	6985.10

Heat Rise Test
1st Run

Date	Time	TC1	TC2	TC3	TC4	TC5	TC6	TC7	TC8	TC9	TC10	TC11	TC12	TC13	TC14	TC15	TC16	VDC	Amps	Watts
2006/11/14	09:04:34	1156.9	844.1	140.9	223.1	185.7	133.8	404.5	459.8	136.1	129.3	117.1	149.8	62.8	63.1	62.6	62.6	230.10	30.37	6988.14
2006/11/14	09:05:34	1156.9	842.2	141.0	223.2	185.7	133.8	403.1	456.0	136.6	129.6	117.2	149.9	62.6	62.6	62.8	62.4	230.20	30.37	6991.18
2006/11/14	09:06:34	1157.1	846.7	141.3	222.9	186.0	133.9	404.5	461.0	136.5	129.7	117.3	150.0	63.1	62.6	63.0	62.6	230.10	30.37	6988.14
2006/11/14	09:07:34	1158.5	842.7	141.3	223.4	185.5	133.8	403.4	456.7	136.2	129.8	117.3	150.1	63.1	63.1	62.8	62.0	230.20	30.38	6993.48
2006/11/14	09:08:34	1157.7	847.9	141.5	224.4	186.2	134.1	404.2	453.0	136.7	130.0	117.5	150.1	62.8	62.6	62.8	62.2	230.00	30.35	6980.50
2006/11/14	09:09:34	1158.1	848.9	141.6	225.2	186.2	134.2	406.2	458.9	136.8	130.1	117.5	150.2	62.6	62.3	62.8	62.6	230.10	30.37	6988.14
2006/11/14	09:10:34	1158.3	849.9	141.7	225.5	185.7	134.4	406.6	457.5	137.0	130.4	117.6	150.2	62.6	62.8	62.8	62.4	230.20	30.38	6993.48
2006/11/14	09:11:34	1157.8	850.2	141.8	225.0	184.7	134.2	404.8	460.3	137.0	130.6	117.9	150.4	62.8	62.8	62.4	61.9	230.10	30.38	6990.44
2006/11/14	09:12:34	1159.7	850.2	141.8	223.2	185.2	134.2	403.8	454.0	136.8	130.3	117.8	150.5	62.6	62.3	62.4	62.1	230.10	30.37	6988.14
2006/11/14	09:13:34	1159.0	848.9	141.9	224.5	185.4	134.3	405.6	456.8	137.3	130.3	118.0	150.6	62.4	62.4	62.6	62.2	230.30	30.38	6996.51
2006/11/14	09:14:34	1157.5	851.1	142.0	224.3	186.0	134.6	405.9	453.3	137.6	130.8	118.0	150.6	62.0	62.4	62.4	62.1	230.20	30.36	6988.87
2006/11/14	09:15:34	1158.8	846.7	142.0	225.4	186.0	134.5	404.9	453.3	137.5	130.8	118.0	150.6	62.6	62.6	62.6	62.4	230.10	30.38	6990.44
2006/11/14	09:16:34	1157.8	847.4	142.1	224.9	186.2	134.9	405.6	456.5	137.4	130.9	118.2	150.7	62.4	62.2	62.6	62.6	230.10	30.38	6990.44
2006/11/14	09:17:34	1158.0	847.9	142.2	224.5	186.4	134.5	406.8	450.0	137.1	130.8	118.3	150.7	63.0	62.6	62.4	62.3	230.00	30.35	6980.50
2006/11/14	09:18:34	1158.1	847.3	142.1	223.8	186.4	134.7	404.6	449.7	137.4	130.6	118.3	150.8	62.8	62.4	62.8	62.6	230.20	30.38	6993.48
2006/11/14	09:19:34	1157.7	850.7	142.1	222.9	185.9	134.6	407.3	452.2	137.1	130.8	118.2	150.8	62.6	62.2	62.6	62.3	230.10	30.39	6995.78
2006/11/14	09:20:34	1157.7	850.4	142.1	224.7	186.4	134.8	405.9	452.0	137.3	130.6	118.3	150.9	62.4	62.6	62.6	62.0	230.20	30.37	6991.18
2006/11/14	09:21:34	1158.3	848.9	142.1	225.2	186.5	134.9	404.6	453.5	137.4	130.9	118.4	150.9	62.3	62.3	62.4	62.2	230.20	30.37	6991.18
2006/11/14	09:22:34	1158.1	848.0	142.2	224.5	186.4	134.7	406.2	455.0	137.5	130.8	118.5	151.0	62.8	62.1	62.3	61.9	230.20	30.40	6998.08
2006/11/14	09:23:34	1157.7	847.9	142.3	223.6	185.5	134.7	405.8	454.6	137.3	130.6	118.5	151.0	61.8	61.6	62.1	61.4	230.00	30.36	6982.80
2006/11/14	09:24:34	1158.5	850.0	142.3	222.7	186.0	134.9	407.5	454.4	137.3	130.8	118.5	151.0	61.8	61.5	61.7	61.2	230.10	30.37	6988.14
2006/11/14	09:25:34	1157.8	851.0	142.4	223.0	186.7	135.2	406.3	450.6	137.8	130.8	118.6	151.2	61.9	61.7	61.9	61.3	230.20	30.38	6993.48
2006/11/14	09:26:34	1159.0	851.0	142.6	222.7	186.7	135.1	407.5	454.6	137.8	131.0	118.8	151.3	62.6	62.0	62.2	62.1	230.10	30.38	6990.44
2006/11/14	09:27:34	1158.5	843.6	142.8	224.8	186.4	135.5	405.4	452.9	137.9	131.3	118.8	151.3	62.6	62.2	62.3	62.1	230.10	30.36	6985.84
2006/11/14	09:28:34	1158.7	848.9	142.7	223.9	186.5	135.3	406.0	454.8	138.3	131.5	119.0	151.4	62.6	62.6	62.3	61.9	230.30	30.39	6998.82
2006/11/14	09:29:34	1158.3	847.9	142.7	225.5	187.0	135.4	406.1	451.4	138.1	131.3	119.2	151.5	62.2	62.6	62.4	62.2	230.20	30.38	6993.48
2006/11/14	09:30:34	1158.7	849.6	142.9	225.0	186.9	135.5	406.2	452.9	138.0	131.5	119.2	151.5	62.2	62.8	62.4	61.4	230.20	30.39	6995.78
2006/11/14	09:31:34	1158.2	850.3	142.9	223.2	186.7	135.5	406.8	456.5	138.3	131.3	119.1	151.5	62.4	62.4	62.3	61.7	230.00	30.37	6985.10
2006/11/14	09:32:34	1158.7	846.7	143.1	227.2	186.4	135.8	406.3	458.6	138.8	132.0	119.2	151.6	62.6	62.3	62.1	62.2	230.20	30.28	6970.46
2006/11/14	09:33:34	1158.4	846.7	143.2	224.3	186.4	135.7	406.9	458.5	138.6	132.0	119.4	151.8	62.8	62.6	62.6	62.4	230.20	30.38	6993.48
2006/11/14	09:34:34	1158.3	848.9	143.2	224.8	186.9	135.8	407.3	456.5	138.8	132.0	119.4	151.8	62.6	62.8	62.0	62.6	230.10	30.37	6988.14
2006/11/14	09:35:34	1158.4	849.2	143.2	226.4	186.5	136.1	407.0	457.3	138.6	132.3	119.6	152.0	62.8	63.1	62.6	62.4	230.10	30.36	6988.14
2006/11/14	09:36:34	1159.5	850.4	143.3	225.0	185.7	135.8	406.2	454.3	139.2	132.2	119.6	152.1	61.9	62.4	62.1	62.2	230.10	30.37	6990.44
2006/11/14	09:37:34	1159.9	848.9	143.3	225.7	186.5	136.2	408.4	456.2	138.8	132.3	119.7	152.1	62.8	62.6	62.3	61.8	229.20	30.28	6940.18
2006/11/14	09:38:34	1160.0	848.8	143.5	225.7	186.0	136.1	407.5	453.0	139.0	132.5	119.8	152.2	61.9	62.0	62.1	61.7	230.10	30.37	6988.14
2006/11/14	09:39:34	1158.8	851.9	143.5	225.9	187.0	136.2	407.5	453.0	139.2	132.3	119.9	152.2	62.3	62.8	62.2	62.2	230.10	30.29	6969.73
2006/11/14	09:40:34	1160.5	849.4	143.4	223.7	186.5	136.3	407.8	455.2	139.3	132.5	119.9	152.3	62.3	62.6	62.4	62.4	230.00	30.36	6982.80
2006/11/14	09:41:34	1159.7	853.4	143.4	224.6	187.0	136.4	409.5	454.9	139.5	132.5	120.0	152.3	61.9	62.8	62.2	61.9	230.20	30.38	6993.48
2006/11/14	09:42:34	1160.0	851.1	143.5	225.4	187.0	136.5	409.3	453.5	139.5	132.7	120.0	152.4	61.8	62.6	62.2	62.1	230.10	30.37	6988.14
2006/11/14	09:43:34	1159.9	850.3	143.6	223.4	186.9	136.3	407.7	456.5	139.5	132.7	120.3	152.5	61.9	62.3	62.3	61.9	230.20	30.31	6983.42
2006/11/14	09:44:34	1160.1	848.7	143.6	223.0	186.2	136.5	408.1	453.8	139.5	132.8	120.3	152.5	62.4	62.4	62.3	62.0	230.20	30.37	6991.18
2006/11/14	09:45:34	1161.0	850.2	143.8	226.0	186.5	136.6	407.2	459.4	139.5	133.0	120.4	152.7	62.4	62.4	62.1	62.0	230.30	30.37	6994.21
2006/11/14	09:46:34	1160.8	843.6	143.9	224.7	186.7	136.8	406.6	459.0	139.7	133.4	120.4	152.7	62.3	62.8	62.3	62.2	230.20	30.37	6991.18
2006/11/14	09:47:34	1161.4	843.7	143.9	225.7	186.7	136.8	408.4	456.5	140.0	133.3	120.5	152.9	62.3	62.8	62.4	62.2	229.90	30.35	6977.47
2006/11/14	09:48:34	1161.4	852.7	144.0	226.1	186.9	136.9	408.6	455.6	140.3	133.5	120.6	152.9	61.9	62.6	62.3	62.0	230.00	30.35	6980.50
2006/11/14	09:49:34	1160.1	848.9	144.1	225.2	187.5	137.1	409.1	455.0	140.4	133.7	120.8	153.0	62.6	63.0	62.3	62.2	230.20	30.37	6991.18
2006/11/14	09:50:34	1160.3	850.9	144.1	225.4	187.7	137.3	408.1	455.3	140.7	134.0	121.0	153.0	62.3	62.6	62.3	62.2	230.00	30.37	6985.10
2006/11/14	09:51:34	1160.9	847.4	144.2	226.2	187.5	137.8	408.1	458.7	140.5	134.0	121.0	153.1	62.3	62.4	62.2	62.1	230.00	30.38	6987.40
2006/11/14	09:52:34	1161.8	852.9	144.4	225.9	188.0	137.5	409.4	455.1	141.0	134.1	121.1	153.2	62.4	63.0	62.6	62.2	230.10	30.37	6988.14
2006/11/14	09:53:34	1161.4	850.2	144.5	224.6	188.0	137.8	409.9	459.5	140.8	134.2	121.1	153.2	62.6	63.1	62.8	62.2	230.20	30.36	6988.87
2006/11/14	09:54:34	1160.7	854.4	144.5	226.2	187.9	137.8	409.9	454.3	140.7	134.0	121.1	153.2	62.6	62.2	62.8	61.7	230.30	30.39	6998.82
2006/11/14	09:55:34	1160.7	854.5	144.5	226.0	188.0	137.6	410.4	456.7	140.7	133.9	121.1	153.3	62.6	62.8	61.9	62.0	230.20	30.37	6991.18
2006/11/14	09:56:34	1161.2	849.9	144.4	225.2	188.2	137.5	409.7	457.1	140.5	134.1	121.3	153.4	62.3	62.8	62.6	61.9	230.20	30.37	6991.18
2006/11/14	09:57:34	1161.0	851.6	144.6	225.7	187.0	137.6	410.4	454.8	140.7	134.0	121.3	153.4	61.9	62.4	62.1	61.4	230.20	30.38	6993.48
2006/11/14	09:58:34	1160.7	850.2	144.7	227.4	187.7	137.9	411.1	456.0	141.4	134.3	121.3	153.5	61.9	62.4	62.4	62.2	230.20	30.37	6991.18
2006/11/14	09:59:34	1161.9	851.0	144.7	226.0	187.7	137.9	406.2	456.5	141.0	134.2	121.5	153.7	62.4	63.1	62.1	61.8	230.10	30.37	6988.14

Heat Rise Test
1st Run

Date	Time	TC1	TC2	TC3	TC4	TC5	TC6	TC7	TC8	TC9	TC10	TC11	TC12	TC13	TC14	TC15	TC16	VDC	Amps	Watts
2006/11/14	10:00:34	1161.1	851.7	144.7	228.8	186.9	137.8	411.0	456.3	141.0	134.3	121.5	153.6	62.0	62.8	62.1	61.7	230.10	30.37	6988.14
2006/11/14	10:01:34	1161.7	850.7	144.7	225.7	187.5	138.0	409.9	451.7	141.0	134.4	121.8	153.8	62.2	62.0	62.6	62.1	230.20	30.38	6993.48
2006/11/14	10:02:34	1161.1	846.9	144.7	225.9	188.0	138.1	410.1	455.0	141.0	134.3	121.8	153.7	61.9	62.1	62.2	62.1	230.10	30.37	6988.14
2006/11/14	10:03:34	1161.7	852.6	144.9	225.9	187.7	138.6	408.8	451.7	141.3	134.2	121.8	153.9	62.2	63.0	62.4	61.7	230.20	30.37	6991.18
2006/11/14	10:04:34	1160.7	852.1	144.9	226.0	187.2	138.3	409.6	452.8	141.3	134.7	122.0	153.9	62.0	62.4	62.2	62.0	230.20	30.37	6991.18
2006/11/14	10:05:34	1160.7	853.7	144.9	226.4	188.0	138.3	412.4	449.7	141.2	134.5	122.4	154.2	62.1	61.0	62.3	60.9	230.20	30.36	6988.87
2006/11/14	10:06:34	1161.7	852.9	145.3	226.7	188.4	138.8	413.3	450.8	141.6	135.0	122.3	154.2	61.3	61.6	61.8	60.9	230.20	30.37	6991.18
2006/11/14	10:07:34	1162.4	852.7	145.3	227.2	187.7	138.5	411.5	448.2	142.0	135.1	122.2	154.2	62.2	62.2	61.6	61.4	230.00	30.35	6980.50
2006/11/14	10:08:34	1161.9	850.7	145.3	226.5	188.2	138.8	408.8	451.0	141.9	135.1	122.3	154.2	61.9	62.2	61.7	61.5	230.20	30.38	6993.48
2006/11/14	10:09:34	1160.8	853.2	145.4	227.2	188.5	139.0	414.5	451.5	142.0	135.1	122.3	154.2	61.4	62.2	61.7	61.5	230.10	30.37	6988.14
2006/11/14	10:10:34	1162.2	853.2	145.4	227.0	188.2	139.3	413.1	454.5	142.0	135.2	122.5	154.4	61.7	62.6	62.2	61.5	230.30	30.38	6996.51
2006/11/14	10:11:34	1162.5	850.7	145.5	225.2	188.5	138.6	411.9	450.5	142.0	135.4	122.5	154.5	62.2	62.4	62.0	61.5	230.20	30.38	6993.48
2006/11/14	10:12:34	1161.0	852.9	145.5	227.2	187.7	139.0	413.1	449.7	142.1	135.4	122.7	154.5	61.4	62.4	62.1	61.4	230.10	30.37	6988.14
2006/11/14	10:13:34	1162.2	851.6	145.6	227.2	188.5	139.3	412.1	453.8	142.8	135.6	122.7	154.5	62.1	62.4	61.8	61.9	229.80	30.37	6985.92
2006/11/14	10:14:34	1162.7	852.8	145.8	226.2	188.2	139.3	410.8	452.2	142.4	135.7	122.7	154.6	61.9	62.4	62.1	61.5	230.30	30.37	6994.21
2006/11/14	10:15:34	1162.4	853.4	145.8	228.5	187.9	139.3	414.2	450.3	142.7	135.8	122.9	154.8	62.3	62.6	61.8	61.8	229.80	30.32	6967.54
2006/11/14	10:16:34	1162.5	856.6	145.8	226.2	187.9	139.2	411.2	448.8	142.8	135.9	123.0	154.8	62.4	62.3	61.9	61.4	230.10	30.36	6985.84
2006/11/14	10:17:34	1162.8	851.4	145.8	228.0	188.2	139.5	410.5	452.7	142.1	135.8	123.2	154.9	61.8	62.6	61.9	61.5	230.20	30.38	6993.48
2006/11/14	10:18:34	1162.7	858.2	145.8	227.2	188.7	139.8	413.1	453.5	142.8	135.7	123.1	154.9	62.0	61.9	61.7	61.4	230.30	30.38	6996.51
2006/11/14	10:19:34	1163.2	852.7	145.8	227.7	188.0	139.5	414.0	449.5	142.6	135.8	123.2	155.0	61.5	61.7	62.1	61.8	230.20	30.38	6993.48
2006/11/14	10:20:34	1162.5	847.5	145.8	226.9	188.5	139.5	410.2	450.5	142.4	136.0	123.2	154.9	61.8	62.4	61.7	61.9	230.10	30.38	6990.44
2006/11/14	10:21:34	1162.4	853.7	145.9	226.5	188.4	139.5	413.4	454.3	142.9	136.1	123.3	155.0	61.4	62.0	61.8	61.6	230.20	30.38	6993.48
2006/11/14	10:22:34	1162.7	848.7	145.9	228.5	189.0	140.0	412.9	450.4	142.6	136.0	123.3	155.1	61.5	61.8	62.2	61.7	230.00	30.35	6980.50
2006/11/14	10:23:34	1162.5	858.8	146.1	228.5	188.5	140.0	411.3	449.8	142.7	136.1	123.4	155.1	62.3	61.7	62.2	61.7	230.20	30.38	6993.48
2006/11/14	10:24:34	1163.4	854.4	146.1	226.5	188.7	140.0	414.2	452.9	142.8	136.0	123.5	155.1	62.3	62.6	62.0	61.3	230.10	30.38	6990.44
2006/11/14	10:25:34	1163.0	850.7	146.1	226.2	188.5	140.0	413.7	454.3	143.0	136.3	123.6	155.3	62.4	62.3	61.9	61.7	229.70	30.34	6971.40
2006/11/14	10:26:34	1163.7	852.6	146.3	226.7	188.7	140.0	413.1	456.5	143.0	136.5	123.6	155.3	62.2	62.4	62.4	62.0	230.20	30.38	6993.48
2006/11/14	10:27:34	1164.1	855.2	146.3	226.0	189.5	140.3	412.4	454.4	143.3	136.4	123.7	155.4	62.3	62.1	62.2	62.1	230.20	30.38	6995.78
2006/11/14	10:28:34	1163.4	853.1	146.5	227.2	189.4	140.5	412.6	454.4	143.3	136.6	123.8	155.4	62.4	62.6	62.4	62.0	230.20	30.37	6991.18
2006/11/14	10:29:34	1163.4	852.3	146.8	227.5	189.5	140.9	415.5	449.3	143.4	136.8	123.9	155.6	62.3	62.3	62.3	61.9	230.10	30.37	6992.74
2006/11/14	10:30:34	1162.5	850.0	146.8	228.7	189.2	141.0	415.0	453.6	143.5	137.0	124.0	155.8	62.6	62.3	62.3	62.0	230.10	30.38	6990.44
2006/11/14	10:31:34	1163.8	854.7	147.0	228.3	189.7	141.3	414.5	452.8	143.7	137.3	124.3	155.8	62.6	62.6	62.8	62.0	230.20	30.37	6991.18
2006/11/14	10:32:34	1163.7	858.6	147.0	226.7	190.2	141.2	414.0	452.9	144.3	137.3	124.2	155.9	62.4	62.6	62.6	62.1	230.30	30.38	6996.51
2006/11/14	10:33:34	1164.1	851.0	147.1	228.0	189.9	141.5	415.0	456.8	144.4	137.8	124.4	156.0	62.6	62.8	62.2	62.2	230.20	30.38	6993.48
2006/11/14	10:34:34	1163.8	852.2	147.1	228.0	190.2	141.6	415.3	453.3	144.4	137.8	124.4	156.0	62.6	63.1	62.8	62.6	230.20	30.38	6993.48
2006/11/14	10:35:34	1163.4	855.6	147.5	227.7	190.0	141.7	416.0	447.7	144.6	137.8	124.7	156.3	63.1	63.3	63.0	62.8	230.20	30.37	6991.18
2006/11/14	10:36:34	1163.5	853.2	147.3	228.3	190.0	141.5	414.5	452.5	144.5	137.8	124.7	156.3	62.4	63.1	63.1	62.8	230.20	30.37	6991.18
2006/11/14	10:37:34	1164.2	855.3	147.3	227.0	190.0	141.7	416.6	456.8	144.7	137.6	124.7	156.5	62.8	62.6	62.8	62.4	230.20	30.37	6991.18
2006/11/14	10:38:34	1163.8	859.0	147.3	228.2	190.0	141.4	415.3	450.0	144.5	137.9	124.8	156.5	63.0	63.1	62.8	62.4	230.10	30.38	6990.44
2006/11/14	10:39:34	1164.2	855.6	147.5	227.7	190.0	142.1	415.6	451.5	144.8	138.1	125.0	156.5	62.6	63.1	62.6	62.2	230.20	30.38	6993.48
2006/11/14	10:40:34	1164.0	855.3	147.5	227.2	190.4	142.2	413.8	455.8	144.7	138.3	124.9	156.5	62.2	63.1	62.6	62.2	230.20	30.37	6991.18
2006/11/14	10:41:34	1163.5	852.9	147.8	227.0	189.7	142.0	414.0	454.7	145.0	138.5	125.1	156.8	62.6	62.8	63.0	62.6	230.20	30.38	6993.48
2006/11/14	10:42:34	1163.8	856.0	147.8	228.2	190.2	142.2	413.4	452.3	145.1	138.5	125.3	156.8	62.8	63.0	62.3	62.6	230.20	30.38	6993.48
2006/11/14	10:43:34	1163.4	852.9	148.0	228.0	190.4	142.4	413.5	453.5	145.0	138.5	125.1	156.8	62.8	63.2	62.8	62.6	230.20	30.38	6993.48
2006/11/14	10:44:34	1164.7	855.3	148.0	227.9	190.7	142.5	415.9	457.3	145.5	138.6	125.3	156.8	62.8	62.8	62.8	62.8	230.20	30.38	6993.48
2006/11/14	10:45:34	1165.0	859.9	148.3	228.8	191.0	142.9	416.5	457.3	145.9	139.0	125.3	157.0	62.8	63.2	62.8	62.8	230.20	30.38	6993.48
2006/11/14	10:46:34	1164.5	855.5	148.3	228.5	191.2	142.9	417.9	457.3	145.6	138.8	125.4	157.0	63.3	63.2	62.8	62.4	230.20	30.38	6993.48
2006/11/14	10:47:34	1164.4	861.2	148.3	230.6	190.9	143.0	419.1	457.3	146.0	139.0	125.5	157.0	62.8	63.2	63.0	62.6	230.20	30.38	6993.48
2006/11/14	10:48:34	1165.0	859.1	148.5	228.5	191.0	143.1	417.4	457.8	146.0	139.3	125.6	157.3	62.8	62.8	62.8	62.6	230.20	30.38	6993.48
2006/11/14	10:49:34	1165.2	855.4	148.5	230.2	190.4	143.2	417.0	461.5	146.3	139.3	125.8	157.3	62.6	62.6	62.2	62.3	230.10	30.37	6988.14
2006/11/14	10:50:34	1165.4	857.5	148.5	230.1	190.7	143.2	416.8	460.5	145.9	139.5	125.8	157.3	62.8	63.1	63.0	62.2	230.10	30.36	6985.84
2006/11/14	10:51:34	1166.4	858.8	148.5	228.2	190.5	143.2	416.9	460.8	145.9	139.3	125.8	157.5	62.3	62.1	62.6	61.9	230.20	30.38	6993.48
2006/11/14	10:52:34	1164.5	855.3	148.3	229.5	190.4	142.3	415.9	462.9	145.3	138.8	126.0	157.3	61.1	59.7	61.3	60.2	230.20	30.38	6995.78
2006/11/14	10:53:34	1165.0	856.2	148.5	228.5	190.2	142.2	417.4	456.8	145.5	138.6	126.0	157.5	60.2	59.5	60.4	59.6	230.20	30.38	6993.48
2006/11/14	10:54:34	1165.4	856.6	148.3	228.2	190.2	142.6	417.4	460.3	145.1	138.3	126.0	157.3	60.2	59.1	60.1	59.5	230.00	30.36	6982.80
2006/11/14	10:55:34	1165.1	858.2	148.3	229.5	189.2	142.6	416.8	460.5	145.6	138.8	125.8	157.3	61.1	61.1	60.8	59.6	230.10	30.38	6990.44

Heat Rise Test
1st Run

Date	Time	TC1	TC2	TC3	TC4	TC5	TC6	TC7	TC8	TC9	TC10	TC11	TC12	TC13	TC14	TC15	TC16	VDC	Amps	Watts
2006/11/14	10:56:34	1165.2	858.9	148.3	228.8	190.2	143.0	415.4	460.6	145.8	138.8	126.0	157.5	61.4	61.1	61.5	60.8	230.10	30.37	6988.14
2006/11/14	10:57:34	1166.0	853.7	148.5	228.7	190.4	142.7	418.0	463.5	145.6	139.0	126.0	157.5	61.2	60.6	61.2	60.4	230.10	30.37	6991.18
2006/11/14	10:58:34	1166.2	851.8	148.8	229.5	189.0	143.1	416.4	463.2	145.9	139.5	126.0	157.5	61.8	61.7	61.5	61.2	230.20	30.36	6988.87
2006/11/14	10:59:34	1166.4	854.5	148.8	229.0	190.7	143.2	415.0	462.7	146.1	139.3	126.3	157.6	62.1	61.8	61.2	61.5	230.20	30.37	6991.18
2006/11/14	11:00:34	1165.9	859.3	148.9	229.5	190.0	143.3	418.0	462.2	145.9	139.5	126.3	157.8	61.5	60.8	61.5	61.2	230.20	30.37	6991.18
2006/11/14	11:01:34	1166.4	856.0	149.0	229.0	190.0	143.1	417.8	458.2	145.9	139.3	126.5	157.8	60.8	59.0	61.1	60.0	230.10	30.37	6988.14
2006/11/14	11:02:34	1165.5	855.3	148.9	229.8	190.0	143.2	417.7	464.6	145.9	139.2	126.5	157.8	60.4	59.8	60.4	59.7	230.30	30.38	6996.51
2006/11/14	11:03:34	1166.2	853.7	148.9	229.8	190.9	143.4	417.8	457.5	146.3	139.5	126.5	158.0	61.3	61.3	61.6	60.8	230.20	30.37	6993.48
2006/11/14	11:04:34	1165.0	859.2	149.0	229.5	190.7	143.4	416.6	459.9	146.6	139.5	126.5	158.0	61.6	60.8	61.6	61.2	230.10	30.38	6990.44
2006/11/14	11:05:34	1165.2	857.2	149.2	229.5	191.4	143.9	418.3	458.0	146.8	139.7	126.7	158.2	62.1	61.2	62.0	61.7	230.20	30.37	6991.18
2006/11/14	11:06:34	1166.6	855.1	149.3	229.0	191.0	143.7	419.1	459.1	146.8	139.8	126.5	158.2	62.0	61.9	62.1	61.5	230.20	30.37	6991.18
2006/11/14	11:07:34	1166.2	854.8	149.3	229.8	191.0	144.1	417.7	465.8	147.0	140.0	126.8	158.3	62.4	62.6	62.4	61.9	228.90	30.24	6921.94
2006/11/14	11:08:34	1166.5	857.4	149.4	228.8	191.0	144.1	417.8	458.6	147.3	140.3	127.0	158.5	62.2	62.6	62.8	62.3	230.40	30.38	6999.55
2006/11/14	11:09:34	1166.4	852.3	149.5	231.0	190.7	144.2	418.8	465.6	147.3	140.3	127.0	158.7	62.6	62.8	62.8	62.6	230.00	30.36	6982.80
2006/11/14	11:10:34	1167.2	858.0	149.7	229.6	192.0	144.4	417.7	462.7	147.5	140.8	127.2	158.7	62.8	63.0	63.0	62.8	230.00	30.32	6973.60
2006/11/14	11:11:34	1166.7	859.6	149.8	229.6	191.2	144.7	419.8	455.8	147.8	140.9	127.4	158.7	63.0	63.0	62.6	62.3	230.20	30.37	6991.18
2006/11/14	11:12:34	1166.2	859.5	149.8	229.0	191.7	144.5	419.4	461.3	148.2	141.0	127.4	158.8	62.6	63.3	63.2	62.8	230.30	30.37	6994.21
2006/11/14	11:13:34	1166.2	856.0	150.1	229.5	191.4	145.0	419.3	457.9	148.3	141.4	127.5	159.0	62.8	63.5	63.1	62.6	229.20	30.23	6928.72
2006/11/14	11:14:34	1167.9	856.2	150.2	230.8	191.9	145.0	418.3	465.6	148.2	141.4	127.5	159.0	63.0	63.5	62.6	62.6	230.20	30.36	6991.91
2006/11/14	11:15:34	1167.0	860.2	150.3	230.4	192.5	145.3	418.5	464.3	148.7	141.7	127.7	159.0	63.2	63.6	63.3	63.1	230.20	30.38	6993.48
2006/11/14	11:16:34	1167.4	861.2	150.4	230.3	191.9	145.4	419.3	464.8	148.5	141.9	127.9	159.3	63.2	63.5	63.3	62.6	230.20	30.37	6991.18
2006/11/14	11:17:34	1167.2	860.4	150.5	229.5	191.7	145.5	419.6	465.3	148.5	141.5	127.9	159.3	62.6	63.4	63.2	62.8	230.20	30.39	6995.78
2006/11/14	11:18:34	1167.2	858.7	150.6	228.7	192.5	145.4	422.0	464.5	149.2	142.0	128.0	159.3	63.0	63.7	63.2	63.4	230.10	30.36	6985.84
2006/11/14	11:19:34	1168.4	853.4	150.7	229.6	193.0	145.9	419.8	469.5	149.0	142.2	128.0	159.5	62.8	63.9	63.3	63.4	230.10	30.36	6985.84
2006/11/14	11:20:34	1167.4	861.7	150.7	230.0	193.0	145.8	420.3	461.9	149.0	142.2	128.2	159.5	63.2	63.9	63.4	63.3	230.10	30.35	6983.54
2006/11/14	11:21:34	1167.2	860.0	150.7	232.3	192.5	145.8	420.1	464.2	149.0	142.1	128.2	159.5	63.0	63.7	63.5	63.3	230.20	30.38	6993.48
2006/11/14	11:22:34	1167.1	857.7	150.6	231.3	191.9	145.3	420.4	466.6	147.8	141.7	128.3	159.5	62.4	60.6	62.6	61.2	230.10	30.38	6990.44
2006/11/14	11:23:34	1168.2	859.8	150.5	229.0	191.5	145.3	419.5	464.3	148.0	141.4	128.3	159.3	61.6	61.5	61.5	60.8	230.10	30.38	6990.44
2006/11/14	11:24:34	1167.7	860.7	150.5	231.3	191.2	145.1	420.8	462.6	148.2	141.4	128.3	159.3	60.6	60.6	60.4	60.1	230.20	30.38	6993.48
2006/11/14	11:25:34	1167.5	856.9	150.2	230.2	190.7	144.7	420.9	469.5	147.5	140.8	128.2	159.3	60.2	58.6	59.3	58.8	230.30	30.37	6997.25
2006/11/14	11:26:34	1167.0	860.4	150.3	231.2	191.2	144.8	418.8	465.5	147.3	140.5	128.2	159.3	60.0	58.6	59.6	58.6	230.10	30.37	6990.44
2006/11/14	11:27:34	1168.2	861.4	150.4	229.5	190.7	144.7	420.4	470.4	147.8	141.0	128.1	159.3	59.9	58.9	59.6	58.8	230.10	30.38	6990.44
2006/11/14	11:28:34	1168.4	860.4	150.5	230.6	190.9	145.1	420.5	474.5	148.2	141.3	128.4	159.5	60.6	60.1	60.6	59.7	230.10	30.35	6983.54
2006/11/14	11:29:34	1169.2	858.4	150.5	228.0	190.7	144.9	419.9	468.0	147.3	141.0	128.4	159.5	60.9	60.0	60.6	58.8	230.20	30.37	6991.18
2006/11/14	11:30:34	1168.6	858.7	150.7	229.8	190.5	145.5	420.9	468.3	148.2	141.3	128.5	159.5	60.9	59.8	59.8	59.5	229.80	30.32	6967.54
2006/11/14	11:31:34	1167.2	857.4	150.7	230.6	190.7	145.4	422.3	468.1	148.0	141.4	128.5	159.5	60.4	59.5	59.8	59.1	230.20	30.37	6991.18
2006/11/14	11:32:34	1167.4	857.9	150.9	232.5	191.2	145.4	421.3	470.4	148.3	141.7	128.7	159.7	61.1	59.5	59.9	59.4	230.20	30.37	6991.18
2006/11/14	11:33:34	1167.4	856.1	151.0	231.1	191.5	145.5	421.0	473.7	148.5	141.5	128.7	159.8	59.9	59.2	60.2	58.8	230.00	30.35	6980.50
2006/11/14	11:34:34	1167.5	857.7	150.6	230.9	191.7	145.3	419.4	472.0	147.8	141.2	128.7	159.8	60.4	58.6	60.0	58.2	230.20	30.37	6991.18
2006/11/14	11:35:34	1168.6	857.9	150.8	230.0	191.2	145.1	420.1	472.4	148.0	141.3	128.9	159.9	59.9	57.3	60.0	57.3	230.10	30.38	6990.44
2006/11/14	11:36:34	1168.8	858.4	150.8	230.1	191.2	145.3	422.1	469.0	148.0	141.3	128.9	159.9	59.7	57.6	59.5	57.5	230.00	30.25	6957.50
2006/11/14	11:37:34	1168.9	858.9	151.1	230.6	191.2	145.4	420.3	472.1	148.5	141.4	129.0	159.9	59.6	57.5	59.5	58.4	230.10	30.38	6990.44
2006/11/14	11:38:34	1168.1	856.8	151.1	230.4	191.2	145.3	420.6	475.9	148.0	141.3	129.0	160.0	59.6	58.0	59.6	57.9	230.00	30.35	6982.80
2006/11/14	11:39:34	1168.2	858.6	151.1	231.5	191.2	145.8	422.0	469.1	148.5	141.3	129.1	160.0	59.0	57.1	59.4	57.3	230.20	30.38	6993.48
2006/11/14	11:40:34	1167.8	861.8	151.2	230.1	191.5	146.0	422.9	476.0	148.2	141.5	129.3	160.2	59.4	57.8	59.4	57.5	229.90	30.36	6986.66
2006/11/14	11:41:34	1168.5	860.2	151.1	229.5	191.2	145.5	421.5	473.3	148.3	141.2	129.0	160.0	59.2	57.0	59.0	57.0	230.20	30.38	6993.48
2006/11/14	11:42:34	1168.1	859.5	151.2	231.1	191.4	145.6	421.2	473.5	148.5	141.4	129.1	160.2	59.2	56.4	59.2	57.5	230.10	30.37	6988.14
2006/11/14	11:43:34	1170.2	856.0	151.2	231.5	191.0	145.9	422.9	472.3	148.5	141.4	129.0	160.2	59.2	59.0	59.5	58.4	230.10	30.37	6988.14
2006/11/14	11:44:34	1169.7	855.1	151.4	231.1	191.2	146.0	422.9	473.1	148.0	141.4	129.1	160.0	59.3	58.0	59.3	57.6	230.20	30.37	6991.18
2006/11/14	11:45:34	1169.1	861.7	151.5	229.6	191.9	145.8	423.4	474.1	148.5	141.6	129.4	160.2	59.4	57.6	59.2	57.3	230.20	30.25	6963.55
2006/11/14	11:46:34	1168.9	859.2	151.5	230.4	191.2	146.0	422.4	471.7	148.7	141.7	129.4	160.3	59.4	57.9	59.3	58.1	230.10	30.38	6992.74
2006/11/14	11:47:34	1168.9	859.0	151.5	230.2	191.2	146.1	420.4	476.8	148.5	141.7	129.5	160.4	59.5	56.4	59.2	57.4	230.10	30.37	6988.14
2006/11/14	11:48:34	1170.1	861.4	151.8	230.4	191.0	146.3	421.8	473.1	148.3	141.8	129.6	160.5	59.0	57.0	59.3	57.1	230.20	30.37	6991.18
2006/11/14	11:49:34	1169.8	860.2	151.8	232.0	190.7	145.9	421.0	476.5	148.3	141.7	129.6	160.5	59.1	58.6	59.0	56.9	230.20	30.36	6988.87
2006/11/14	11:50:34	1169.9	859.7	151.9	230.8	191.5	146.1	422.8	474.5	148.5	142.0	129.6	160.5	58.8	58.4	58.8	56.6	230.10	30.37	6988.14
2006/11/14	11:51:34	1171.2	860.0	152.0	230.0	191.5	146.8	421.5	479.2	149.0	142.4	129.7	160.7	59.7	58.9	59.7	58.9	229.40	30.26	6941.64

Heat Rise Test
1st Run

Date	Time	TC1	TC2	TC3	TC4	TC5	TC6	TC7	TC8	TC9	TC10	TC11	TC12	TC13	TC14	TC15	TC16	VDC	Amps	Watts
2006/11/14	11:52:34	1169.5	859.5	152.0	230.7	191.9	146.5	421.3	475.6	149.0	142.3	129.8	160.8	60.1	58.6	59.7	58.4	230.20	30.37	6993.48
2006/11/14	11:53:34	1169.4	857.4	152.2	231.1	192.2	146.8	423.2	474.8	149.8	142.7	129.9	161.0	60.6	59.9	60.0	59.3	230.00	30.38	6987.40
2006/11/14	11:57:32	1168.9	858.2	152.9	232.9	192.0	148.0	424.8	474.1	151.2	143.6	130.3	161.5	61.3	61.1	60.4	60.6	230.20	30.36	6988.87
2006/11/14	11:58:32	1169.2	860.3	152.8	232.7	193.2	147.7	424.4	475.0	151.1	143.8	130.5	161.6	61.0	61.9	61.0	61.2	230.10	30.36	6985.84
2006/11/14	11:59:32	1169.6	856.8	152.9	232.9	193.9	148.2	423.7	483.6	150.9	144.1	130.6	161.6	62.0	61.4	61.6	61.6	230.20	30.37	6991.18
2006/11/14	12:00:32	1170.3	862.4	153.0	230.9	192.9	148.3	423.3	479.1	151.2	144.5	130.8	161.8	62.1	61.8	61.9	61.6	230.10	30.36	6988.14
2006/11/14	12:01:32	1169.7	857.2	153.4	234.2	193.5	148.5	423.8	471.6	151.5	144.4	131.0	162.0	61.9	61.2	61.9	61.1	230.10	30.38	6990.44
2006/11/14	12:02:32	1169.8	862.3	153.5	233.8	194.0	148.5	424.4	478.5	151.2	144.6	131.0	162.1	62.1	61.4	61.8	61.2	230.20	30.37	6991.18
2006/11/14	12:03:32	1170.1	862.9	153.5	231.3	193.7	148.7	425.3	479.6	151.5	144.7	131.3	162.2	61.8	60.6	61.7	60.2	230.20	30.37	6991.18
2006/11/14	12:04:32	1171.1	860.4	153.7	231.7	193.5	149.2	425.2	476.7	151.8	144.9	131.1	162.2	61.2	60.4	61.5	60.6	229.80	30.32	6967.54
2006/11/14	12:05:32	1171.1	858.2	153.8	234.5	193.5	149.0	425.8	479.0	152.0	144.8	131.1	162.2	61.7	61.1	61.8	60.4	230.20	30.36	6988.87
2006/11/14	12:06:32	1170.4	859.0	153.8	232.5	194.7	149.3	425.0	476.5	152.1	144.8	131.3	162.3	61.7	60.6	61.6	60.6	230.10	30.36	6985.84
2006/11/14	12:07:32	1171.3	859.6	154.0	230.7	194.2	149.3	424.8	477.2	152.1	145.1	131.3	162.4	61.9	61.3	61.8	61.2	230.10	30.35	6983.54
2006/11/14	12:08:32	1170.3	863.1	154.1	233.2	193.7	149.5	425.6	479.4	152.2	145.4	131.6	162.6	61.4	60.8	62.1	60.9	230.20	30.38	6993.48
2006/11/14	12:09:32	1172.2	855.2	154.1	232.6	194.5	149.5	424.8	481.4	152.2	144.9	131.5	162.6	61.4	61.1	61.8	60.8	230.10	30.38	6990.44
2006/11/14	12:10:32	1170.2	861.2	154.1	231.7	192.9	149.5	426.0	481.7	152.4	145.3	131.6	162.6	61.6	61.2	61.8	61.1	230.10	30.37	6988.14
2006/11/14	12:11:32	1170.2	863.2	154.2	231.7	194.4	149.8	425.5	484.3	152.1	145.4	131.8	162.7	61.5	61.3	61.9	60.9	230.20	30.37	6993.48
2006/11/14	12:12:32	1170.3	864.4	154.3	232.1	194.0	149.5	427.2	484.7	152.3	145.4	131.8	162.7	61.4	60.4	61.6	60.8	230.10	30.37	6988.14
2006/11/14	12:13:32	1172.5	860.7	154.3	232.5	194.0	149.9	427.4	483.6	152.2	145.4	131.8	162.8	61.1	60.9	61.6	60.0	230.20	30.35	6986.57
2006/11/14	12:14:32	1170.9	865.7	154.5	232.4	194.2	149.7	426.5	479.0	152.4	145.5	131.8	162.9	61.7	61.8	61.8	61.1	230.00	30.36	6985.10
2006/11/14	12:15:32	1170.7	865.2	154.6	234.5	193.7	150.2	426.5	478.0	152.8	145.5	132.0	163.0	62.1	61.4	62.0	61.5	229.90	30.40	6988.96
2006/11/14	12:16:32	1172.3	860.7	154.8	233.7	194.0	150.1	428.2	486.0	152.9	145.9	132.2	163.0	62.1	61.6	62.2	60.6	230.10	30.36	6985.84
2006/11/14	12:17:32	1171.1	860.7	154.8	233.4	194.5	150.4	425.3	489.4	153.3	146.3	132.0	163.1	61.4	62.4	61.9	62.1	229.90	30.33	6972.87
2006/11/14	12:18:32	1171.3	861.9	154.9	232.4	194.5	150.6	426.4	480.1	153.7	146.5	132.2	163.1	62.2	62.6	62.4	62.1	230.20	30.37	6991.18
2006/11/14	12:19:32	1171.3	857.4	154.9	233.0	194.0	149.9	426.1	486.2	153.4	146.8	132.3	163.2	61.8	62.2	62.6	62.0	230.10	30.37	6988.14
2006/11/14	12:20:32	1170.9	862.3	155.0	234.1	195.0	150.7	425.3	480.8	153.9	147.0	132.3	163.3	61.9	62.8	62.6	62.4	230.20	30.36	6988.87
2006/11/14	12:21:32	1171.3	864.9	155.1	233.7	195.2	150.4	424.8	483.8	153.9	146.8	132.3	163.4	61.9	63.0	62.8	62.6	230.20	30.36	6988.87
2006/11/14	12:22:32	1170.9	864.6	155.3	234.4	194.7	150.5	426.9	486.5	153.8	147.0	132.5	163.4	61.9	62.8	63.0	62.8	230.20	30.37	6991.18
2006/11/14	12:23:32	1171.4	865.7	155.3	234.2	195.2	150.9	428.3	484.4	154.1	147.1	132.7	163.5	63.1	63.0	63.3	62.8	230.10	30.37	6988.14
2006/11/14	12:24:32	1171.4	864.9	155.4	234.2	195.5	151.0	429.0	485.8	154.1	147.0	132.7	163.6	62.8	63.9	63.1	63.0	230.10	30.36	6990.44
2006/11/14	12:25:32	1171.6	860.6	155.4	234.7	195.2	150.9	429.3	488.6	154.3	147.3	132.8	163.6	62.8	63.4	63.1	63.1	230.00	30.35	6980.50
2006/11/14	12:26:32	1171.9	861.7	155.5	234.2	195.5	151.2	426.3	487.8	154.6	147.3	132.9	163.7	62.8	63.0	63.1	63.2	230.20	30.38	6993.48
2006/11/14	12:27:32	1172.9	864.4	155.6	232.9	195.7	151.1	425.0	488.7	154.4	147.3	132.9	163.8	62.8	63.4	63.1	63.3	230.10	30.37	6988.14
2006/11/14	12:28:32	1171.7	864.9	155.8	233.3	195.7	151.0	428.7	483.8	154.6	147.3	133.0	163.9	62.8	63.3	63.0	63.1	230.00	30.37	6985.10
2006/11/14	12:29:32	1172.2	864.9	155.6	233.7	195.0	151.1	428.3	485.0	154.2	147.5	133.0	163.9	62.6	63.4	62.8	62.8	230.00	30.36	6982.80
2006/11/14	12:30:32	1172.3	863.1	155.5	233.4	194.5	151.1	425.0	482.8	154.3	147.5	133.0	163.8	61.0	63.2	62.1	62.6	230.20	30.37	6991.18
2006/11/14	12:31:32	1173.1	868.4	155.6	233.2	194.9	150.5	426.1	484.3	154.5	147.3	133.0	163.7	61.7	62.8	61.7	61.8	230.00	30.36	6982.80
2006/11/14	12:32:32	1172.6	860.1	155.5	233.7	194.9	150.7	425.2	490.5	154.3	147.3	133.0	163.7	61.7	62.4	62.1	61.9	230.20	30.37	6991.18
2006/11/14	12:33:32	1172.6	863.0	155.5	233.6	193.4	150.2	426.9	491.6	154.2	147.1	133.0	163.7	61.0	62.4	61.8	62.0	230.10	30.37	6988.14
2006/11/14	12:34:32	1172.5	864.9	155.5	233.7	194.0	150.6	426.8	490.1	154.3	147.1	133.0	163.7	61.6	61.8	61.5	61.4	230.20	30.37	6991.18
2006/11/14	12:35:32	1173.1	863.9	155.6	232.7	195.0	150.8	426.5	490.9	154.0	147.5	133.0	163.7	61.8	62.0	62.0	61.4	230.10	30.37	6988.14
2006/11/14	12:36:32	1172.8	864.9	155.6	233.9	194.0	150.4	427.2	487.7	153.4	147.1	133.2	163.8	61.6	62.1	61.4	60.9	229.90	30.36	6979.76
2006/11/14	12:37:32	1171.8	865.5	155.8	233.3	194.4	150.9	427.4	485.2	153.5	147.0	133.4	163.9	61.7	62.3	61.6	60.4	230.00	30.35	6980.50
2006/11/14	12:38:32	1172.2	866.4	155.8	232.8	193.9	150.7	428.2	489.0	153.8	146.8	133.3	163.9	61.3	61.0	61.6	60.8	230.10	30.37	6988.14
2006/11/14	12:39:32	1172.1	862.8	155.9	233.4	195.4	151.3	427.8	490.6	154.3	147.5	133.5	164.1	61.4	61.9	62.1	61.5	230.10	30.36	6985.84
2006/11/14	12:40:32	1172.4	863.0	156.3	234.9	195.7	151.3	429.8	486.8	154.9	147.8	133.7	164.3	61.8	62.8	62.0	62.0	230.10	30.36	6985.84
2006/11/14	12:41:32	1172.9	860.2	156.5	235.0	196.0	151.7	426.4	489.7	155.1	148.0	133.8	164.5	62.8	63.0	62.3	62.6	229.10	30.34	6966.93
2006/11/14	12:42:32	1174.3	863.4	156.5	234.9	196.2	151.8	425.9	492.9	155.5	148.3	133.9	164.5	62.3	63.1	62.6	62.6	230.10	30.35	6983.54
2006/11/14	12:43:32	1172.9	867.7	156.6	233.8	195.4	151.8	429.1	489.5	155.6	148.5	134.0	164.6	62.6	63.0	62.8	62.6	229.60	30.31	6959.18
2006/11/14	12:44:32	1172.3	869.2	156.8	234.4	195.5	151.9	430.8	489.4	155.5	148.3	134.2	164.7	63.3	63.2	62.8	62.8	230.00	30.35	6980.50
2006/11/14	12:45:32	1172.8	862.3	156.8	235.2	195.7	152.4	427.0	494.6	155.8	148.5	134.2	164.9	63.1	63.2	63.7	63.4	230.20	30.37	6991.18
2006/11/14	12:46:32	1174.4	863.7	156.8	232.9	196.2	152.4	426.8	491.6	155.6	148.9	134.3	164.9	63.3	63.5	63.5	63.6	230.10	30.37	6988.14
2006/11/14	12:47:32	1173.6	866.7	157.0	234.9	195.5	152.5	429.3	491.0	155.8	148.8	134.4	164.9	62.6	63.3	63.4	63.1	229.50	30.29	6951.56
2006/11/14	12:48:32	1173.6	867.1	157.1	233.7	195.9	152.3	431.3	491.5	156.0	148.9	134.4	165.1	63.0	63.7	63.2	63.4	230.20	30.37	6991.18
2006/11/14	12:49:32	1173.1	865.5	157.3	235.0	196.4	152.9	431.2	491.3	155.8	149.3	134.6	165.1	63.1	63.8	63.6	63.3	230.00	30.37	6987.40
2006/11/14	12:50:32	1173.8	867.7	157.5	234.7	196.7	152.8	430.6	498.5	156.3	149.0	134.6	165.2	63.5	63.6	63.5	63.4	228.10	30.13	6872.65

Heat Rise Test
1st Run

Date	Time	TC1	TC2	TC3	TC4	TC5	TC6	TC7	TC8	TC9	TC10	TC11	TC12	TC13	TC14	TC15	TC16	VDC	Amps	Watts
2006/11/14	12:51:32	1172.7	865.2	157.5	236.7	197.2	152.8	429.0	488.7	156.3	149.4	134.9	165.3	63.3	63.6	63.6	63.3	230.30	30.37	6994.21
2006/11/14	12:52:32	1173.3	865.2	157.5	235.5	196.5	153.0	429.6	490.0	156.3	149.5	134.8	165.4	63.2	63.5	63.6	63.6	230.30	30.36	6991.91
2006/11/14	12:53:32	1173.5	868.4	157.6	234.7	197.0	152.9	430.9	496.0	156.5	149.5	134.8	165.4	63.2	63.9	63.6	63.6	230.20	30.35	6992.64
2006/11/14	12:54:32	1173.5	866.6	157.6	234.7	196.5	152.9	431.5	495.2	156.3	149.5	135.0	165.5	63.2	64.6	63.5	63.1	230.30	30.35	6989.61
2006/11/14	12:55:32	1175.5	863.9	157.8	233.9	197.0	153.3	431.3	499.9	156.8	149.9	135.0	165.6	63.1	63.9	63.7	63.6	230.20	30.38	6993.48
2006/11/14	12:56:32	1174.6	866.7	157.8	234.2	196.9	153.2	431.5	496.9	156.6	149.8	135.2	165.7	63.3	63.7	63.7	63.3	230.10	30.37	6988.14
2006/11/14	12:57:32	1173.9	860.2	157.8	235.5	196.4	153.3	430.2	498.3	156.6	150.0	135.3	165.7	63.5	63.7	63.7	63.2	230.00	30.35	6980.50
2006/11/14	12:58:32	1173.3	865.0	158.0	235.7	197.4	153.1	428.7	493.2	156.8	150.0	135.2	165.8	63.1	63.5	63.6	63.6	230.20	30.37	6991.18
2006/11/14	12:59:32	1173.9	866.0	158.2	235.1	197.0	153.5	430.3	493.0	157.3	150.1	135.3	165.9	63.0	64.1	64.0	63.6	230.10	30.37	6988.14
2006/11/14	13:00:32	1173.8	866.0	158.2	235.9	197.4	153.7	430.6	492.5	157.3	150.2	135.3	165.9	63.2	64.1	63.6	63.5	230.20	30.38	6993.48
2006/11/14	13:01:32	1173.6	864.1	158.3	234.4	197.4	154.1	430.8	495.0	157.8	150.4	135.5	166.1	63.4	64.0	63.9	63.6	230.20	30.37	6991.18
2006/11/14	13:02:32	1174.6	864.9	158.3	237.0	197.5	153.8	430.3	495.2	157.5	150.4	135.5	166.1	63.5	64.1	63.9	63.7	230.20	30.38	6993.48
2006/11/14	13:03:32	1174.6	867.9	158.5	235.5	197.7	154.2	432.0	492.6	158.0	151.0	135.6	166.1	63.6	64.1	63.9	63.6	230.20	30.37	6993.48
2006/11/14	13:04:32	1175.1	862.4	158.5	234.9	197.2	154.0	430.9	490.6	157.8	150.7	135.6	166.2	63.6	64.2	63.7	63.5	230.20	30.38	6993.48
2006/11/14	13:05:32	1174.6	865.0	158.7	236.8	197.4	153.4	430.9	494.6	157.3	150.6	135.8	166.3	62.6	63.8	63.3	63.4	230.20	30.38	6993.48
2006/11/14	13:06:32	1175.7	870.5	158.8	235.5	196.2	154.3	431.8	500.0	158.0	150.8	135.8	166.3	63.2	63.8	63.2	63.5	230.20	30.37	6991.18
2006/11/14	13:07:32	1175.9	868.2	159.0	236.5	197.7	154.2	431.8	498.4	158.0	150.8	136.0	166.4	62.6	64.0	63.3	63.4	230.20	30.38	6993.48
2006/11/14	13:08:32	1175.0	866.8	159.0	235.7	197.9	154.2	432.3	499.6	158.2	151.2	136.2	166.6	63.5	63.9	63.3	63.6	230.20	30.38	6993.48
2006/11/14	13:09:32	1174.6	867.1	159.3	235.7	198.0	154.5	432.3	494.6	158.2	151.3	136.3	166.6	63.4	64.1	63.5	63.7	230.20	30.37	6991.18
2006/11/14	13:10:32	1176.2	862.7	159.3	236.0	197.7	154.5	429.8	500.4	158.5	151.3	136.3	166.6	63.0	64.2	63.5	63.6	230.20	30.38	6993.48
2006/11/14	13:11:32	1174.9	865.5	159.3	235.7	197.7	154.4	432.8	495.7	158.5	151.5	136.3	166.7	63.1	64.3	63.7	63.7	230.20	30.38	6993.48
2006/11/14	13:12:32	1174.6	866.3	159.3	236.9	198.0	154.9	432.0	495.9	158.7	151.3	136.4	166.7	63.1	64.4	63.6	63.6	230.20	30.37	6991.18
2006/11/14	13:13:32	1175.1	867.9	159.5	237.3	198.4	154.8	432.2	494.9	159.0	151.7	136.3	166.8	63.1	64.0	64.0	63.7	230.20	30.38	6993.48
2006/11/14	13:14:32	1174.5	868.7	159.5	236.0	198.0	154.9	432.8	497.7	158.8	151.7	136.5	166.8	63.1	64.0	63.8	63.7	230.20	30.37	6991.18
2006/11/14	13:15:32	1175.9	865.4	159.7	236.8	197.9	154.9	432.5	504.0	159.3	151.9	136.6	167.0	63.2	63.8	64.0	63.8	230.20	30.38	6993.48
2006/11/14	13:16:32	1176.0	868.7	159.8	235.2	197.7	154.8	432.0	498.2	158.8	152.0	136.6	166.9	63.1	64.0	63.6	63.5	230.20	30.38	6993.48
2006/11/14	13:17:32	1175.6	869.6	159.8	235.5	198.5	155.3	436.0	504.8	159.0	151.8	136.7	167.1	63.9	63.9	64.2	63.8	230.20	30.38	6993.48
2006/11/14	13:18:32	1177.6	871.3	159.8	237.0	198.0	155.1	433.9	506.4	159.5	152.1	136.8	167.1	63.1	64.0	64.0	63.9	230.20	30.37	6991.18
2006/11/14	13:19:32	1177.3	868.5	159.9	236.2	198.0	155.3	434.7	498.5	159.3	152.2	136.9	167.1	63.2	63.7	63.8	63.9	230.20	30.38	6993.48
2006/11/14	13:20:32	1176.1	870.2	160.0	236.5	198.5	155.3	432.5	499.7	159.0	152.4	136.9	167.2	63.0	64.0	63.8	63.7	230.20	30.38	6993.48
2006/11/14	13:21:32	1176.6	863.0	160.0	236.3	198.2	155.6	434.0	500.2	159.0	152.3	137.0	167.3	63.1	63.8	63.8	63.6	230.20	30.38	6993.48
2006/11/14	13:22:32	1175.6	865.7	160.0	236.2	198.5	155.4	432.5	496.4	159.0	152.4	137.3	167.5	63.3	64.0	64.0	63.5	230.20	30.38	6993.48
2006/11/14	13:23:32	1176.1	862.9	160.2	236.2	198.7	155.8	431.7	497.9	159.5	152.5	137.1	167.5	63.8	63.6	64.0	63.6	230.20	30.37	6991.18
2006/11/14	13:24:32	1175.7	867.3	160.3	236.7	198.2	155.8	433.4	498.4	159.3	152.6	137.3	167.7	63.5	63.9	64.0	63.5	230.20	30.38	6993.48
2006/11/14	13:25:32	1177.9	864.9	160.4	235.9	198.0	156.0	431.8	498.0	159.7	152.4	137.4	167.7	63.7	64.2	64.3	63.7	230.20	30.37	6991.18
2006/11/14	13:26:32	1176.7	870.1	160.5	236.5	197.7	155.8	433.9	500.0	159.9	152.9	137.6	167.8	62.8	64.2	63.8	63.9	230.20	30.38	6993.48
2006/11/14	13:27:32	1176.1	867.9	160.5	237.9	198.2	155.5	434.5	496.7	160.0	153.1	137.6	167.9	64.6	64.3	63.8	63.8	230.20	30.38	6993.48
2006/11/14	13:28:32	1176.2	869.9	160.8	236.8	198.7	156.0	433.7	499.5	159.8	153.2	137.8	167.9	63.9	64.6	64.0	64.1	230.20	30.37	6993.48
2006/11/14	13:29:32	1177.3	870.3	160.7	235.7	198.5	156.1	433.7	500.4	159.9	153.4	137.8	168.0	63.6	63.8	63.8	63.9	230.20	30.37	6991.18
2006/11/14	13:30:32	1177.3	870.6	160.7	237.0	198.7	156.0	434.5	509.0	160.2	152.8	137.8	168.0	63.3	64.0	63.8	63.8	230.20	30.37	6991.18
2006/11/14	13:31:32	1176.5	871.4	160.9	237.2	198.7	156.1	436.0	499.5	160.2	153.2	137.8	168.1	62.8	63.9	63.8	63.6	230.20	30.38	6993.48
2006/11/14	13:32:32	1176.2	868.4	160.9	236.9	198.2	156.3	435.0	507.2	160.3	153.2	137.9	168.2	63.3	63.7	63.8	63.8	230.20	30.38	6993.48
2006/11/14	13:33:32	1177.6	867.6	161.0	236.7	198.5	156.5	434.2	511.8	160.3	153.4	137.9	168.2	62.8	64.6	63.5	63.9	230.10	30.35	6983.54
2006/11/14	13:34:32	1178.2	866.4	161.0	237.2	198.5	156.3	433.8	498.2	160.3	153.3	137.9	168.2	63.4	63.9	63.7	63.7	230.20	30.37	6991.18
2006/11/14	13:35:32	1178.2	869.3	161.2	237.3	199.2	156.3	434.2	504.0	160.4	153.6	138.1	168.3	62.8	64.2	63.7	63.6	230.20	30.37	6991.18
2006/11/14	13:36:32	1177.5	871.1	161.3	237.2	198.8	156.5	434.2	507.2	160.4	153.5	138.1	168.3	63.0	64.3	63.9	63.8	230.20	30.37	6991.18
2006/11/14	13:37:32	1176.9	868.9	161.3	236.9	198.8	156.8	434.1	500.8	160.4	153.9	138.3	168.4	63.3	64.0	63.9	63.8	230.20	30.37	6991.18
2006/11/14	13:38:32	1176.9	871.4	161.4	238.4	198.4	156.6	435.0	506.1	160.5	153.8	138.3	168.5	63.1	64.1	63.7	63.5	230.30	30.38	6996.51
2006/11/14	13:39:32	1176.9	867.9	161.5	238.4	198.7	157.0	435.5	503.5	160.4	153.9	138.3	168.5	62.6	64.0	63.6	63.7	230.20	30.37	6991.18
2006/11/14	13:40:32	1177.6	866.5	161.5	239.2	198.8	157.0	436.0	507.0	160.7	153.9	138.3	168.5	63.0	63.8	63.7	63.7	230.30	30.38	6996.51
2006/11/14	13:41:32	1177.4	869.0	161.7	238.4	198.8	157.0	435.5	500.5	161.2	153.8	138.5	168.8	63.3	64.4	63.8	63.9	230.20	30.37	6991.18
2006/11/14	13:42:32	1176.9	869.0	161.7	236.7	198.7	156.6	433.9	503.5	160.9	154.1	138.5	168.6	63.1	64.4	63.6	63.6	230.10	30.38	6990.44
2006/11/14	13:43:32	1177.6	869.3	161.8	237.3	199.7	157.3	434.2	507.2	161.2	154.2	138.5	168.8	63.2	64.6	63.4	63.7	230.10	30.35	6983.54
2006/11/14	13:44:32	1177.5	872.2	161.9	239.1	199.0	157.0	435.3	501.6	161.0	154.1	138.6	168.8	63.4	64.2	63.8	63.7	230.00	30.36	6982.80
2006/11/14	13:45:32	1176.7	868.7	161.9	238.0	198.7	156.8	433.8	512.8	161.3	154.3	138.8	168.9	62.8	64.4	63.7	63.8	229.30	30.30	6947.79
2006/11/14	13:46:32	1176.9	867.4	162.0	238.1	199.3	157.1	436.4	502.7	160.9	154.4	138.8	168.9	63.6	63.9	63.9	63.8	230.30	30.36	6991.91

Heat Rise Test
1st Run

Date	Time	TC1	TC2	TC3	TC4	TC5	TC6	TC7	TC8	TC9	TC10	TC11	TC12	TC13	TC14	TC15	TC16	VDC	Amps	Watts
2006/11/14	13:47:32	1177.3	867.0	162.0	238.5	199.0	157.1	434.2	506.7	161.0	154.3	139.0	169.0	64.2	64.1	64.0	63.6	230.20	30.38	6996.51
2006/11/14	13:48:32	1177.6	867.8	162.1	237.9	199.5	157.3	435.5	505.5	161.5	154.6	139.0	169.0	63.6	64.1	63.6	63.6	230.00	30.34	6978.20
2006/11/14	13:49:32	1178.0	872.4	162.2	238.2	199.5	157.3	436.5	508.7	161.2	154.2	139.0	169.1	63.6	63.7	63.6	63.6	230.10	30.36	6988.87
2006/11/14	*13:50:32*	*1177.5*	*865.8*	*162.2*	*238.4*	*199.8*	*157.3*	*435.8*	*515.5*	*160.9*	*154.4*	*139.0*	*169.3*	*63.5*	*64.2*	*63.7*	*63.6*	*230.30*	*30.37*	*6997.25*
2006/11/14	13:51:32	1178.1	866.8	162.2	238.5	199.7	157.1	433.7	505.0	161.3	154.5	139.2	169.3	63.9	63.9	63.6	63.7	230.10	30.37	6988.14
2006/11/14	13:52:32	1178.2	869.8	162.3	238.4	198.5	157.6	437.0	511.1	161.5	154.2	139.3	169.3	63.3	64.0	63.6	63.6	230.00	30.38	6987.40
2006/11/14	13:53:32	1177.9	869.0	162.4	236.9	199.2	157.5	435.8	510.9	161.6	154.6	139.3	169.3	63.5	63.7	63.7	63.7	230.20	30.37	6991.18
2006/11/14	13:54:32	1178.1	869.5	162.4	236.8	199.3	157.6	436.8	508.0	161.5	154.8	139.3	169.3	63.4	63.9	63.9	63.6	230.10	30.36	6988.87
2006/11/14	13:55:32	1178.8	870.8	162.5	237.0	199.5	157.6	436.8	509.7	161.0	154.9	139.5	169.4	63.5	63.6	64.0	63.8	230.10	30.37	6990.44
2006/11/14	13:56:32	1178.7	867.0	162.7	239.2	199.2	157.6	435.5	517.9	161.6	154.5	139.5	169.5	62.8	63.6	63.5	63.1	230.10	30.37	6988.14
2006/11/14	13:57:32	1179.9	868.4	162.8	237.3	199.2	158.0	436.0	512.8	161.8	154.8	139.7	169.6	63.0	64.0	63.4	63.7	229.50	30.23	6937.79
2006/11/14	13:58:32	1178.9	866.4	162.9	239.2	198.8	157.8	436.0	511.5	162.2	155.3	139.7	169.8	64.4	63.7	63.7	63.7	230.20	30.37	6991.18
2006/11/14	13:59:32	1179.2	868.9	163.0	237.9	200.3	158.0	436.9	508.0	162.0	155.3	139.8	169.9	64.3	64.2	64.2	63.6	230.20	30.38	6993.48
2006/11/14	14:00:32	1178.3	869.8	163.0	238.5	199.7	158.0	435.8	507.2	162.1	155.3	140.0	170.0	63.9	64.6	64.2	63.8	230.20	30.37	6991.18
2006/11/14	14:01:32	1178.3	872.4	163.1	238.1	199.5	158.3	438.5	509.0	162.0	155.3	139.8	169.9	63.3	64.2	63.9	63.6	230.20	30.36	6991.91
2006/11/14	14:02:32	1178.8	866.6	163.1	239.6	200.3	158.0	437.9	507.1	162.2	155.3	140.0	170.0	63.8	64.1	63.8	63.7	230.20	30.38	6993.48
2006/11/14	14:03:32	1180.4	871.1	163.4	238.5	200.0	158.3	437.1	510.7	162.7	155.5	140.0	170.1	63.5	63.9	63.9	63.8	230.10	30.37	6988.14
2006/11/14	14:04:32	1179.6	870.3	163.2	237.2	199.0	158.0	436.8	508.0	162.3	155.3	140.0	170.0	63.7	63.6	63.4	63.7	230.20	30.36	6991.18
2006/11/14	14:05:32	1179.7	867.3	163.2	238.8	199.0	157.3	436.1	510.6	161.9	155.0	140.3	170.1	62.6	61.7	62.0	61.6	230.20	30.37	6991.18
2006/11/14	14:06:32	1179.8	871.7	163.1	238.1	199.7	158.0	438.0	508.5	161.9	154.6	140.2	169.9	61.7	61.6	62.1	61.4	230.10	30.35	6983.54
2006/11/14	14:07:32	1179.4	871.0	163.1	238.1	199.2	158.0	436.5	514.7	161.5	154.9	139.8	169.8	61.0	60.9	61.6	61.0	230.10	30.36	6985.84
2006/11/14	14:08:32	1179.0	872.5	163.0	239.7	198.2	157.8	437.0	505.5	161.4	154.3	140.0	169.8	61.2	59.6	61.8	59.6	230.00	30.35	6980.50
2006/11/14	14:09:32	1178.1	870.1	162.9	238.8	198.5	157.6	435.0	506.4	161.8	154.6	139.8	169.6	61.2	60.4	61.3	60.6	230.20	30.36	6988.87
2006/11/14	14:10:32	1179.1	871.6	163.1	237.3	199.2	157.8	435.3	505.0	162.0	154.8	140.0	169.8	62.0	60.9	61.7	60.8	230.00	30.37	6985.10
2006/11/14	14:11:32	1179.4	867.4	163.4	238.5	199.7	158.5	435.0	506.8	162.1	155.3	140.3	170.0	62.4	61.7	61.7	61.6	230.20	30.37	6991.18
2006/11/14	14:12:32	1179.0	868.2	163.5	241.1	200.2	158.8	439.9	509.1	162.3	155.1	140.4	170.1	62.3	62.2	62.1	62.1	230.10	30.36	6988.87
2006/11/14	14:13:32	1178.7	872.9	163.5	237.4	199.5	158.0	438.4	515.5	162.2	155.3	140.5	170.3	62.3	61.9	62.6	62.3	230.10	30.36	6985.84
2006/11/14	14:14:32	1180.3	869.3	163.8	238.5	199.3	158.5	437.7	512.2	161.9	155.3	140.7	170.3	62.8	62.3	62.6	62.6	230.20	30.36	6991.91
2006/11/14	14:15:32	1179.4	870.7	163.9	239.5	200.0	159.0	438.3	515.4	162.5	155.1	140.7	170.5	63.1	63.0	63.2	63.0	230.20	30.37	6991.18
2006/11/14	14:16:32	1179.4	868.9	163.9	237.5	199.5	158.8	437.9	518.7	162.8	155.5	140.8	170.5	63.3	63.3	63.3	62.3	230.20	30.37	6991.18
2006/11/14	14:17:32	1181.4	873.8	164.1	239.5	200.3	158.8	434.0	521.7	162.9	156.0	140.9	170.6	62.8	63.8	63.6	63.0	230.20	30.37	6993.48
2006/11/14	14:18:32	1179.4	869.9	164.1	239.4	199.2	159.0	437.9	512.2	163.1	156.0	140.9	170.8	63.5	64.1	63.5	63.2	230.00	30.33	6975.90
2006/11/14	14:19:32	1181.0	872.5	164.4	238.6	200.2	159.2	437.8	510.1	163.0	156.5	141.0	170.8	63.4	63.7	63.8	63.2	229.50	30.34	6963.03
2006/11/14	14:20:32	1180.3	869.3	164.5	239.7	200.0	159.3	439.9	511.5	163.3	156.5	141.0	170.9	63.5	63.8	63.5	63.3	230.20	30.35	6989.61
2006/11/14	14:21:32	1180.3	872.1	164.5	237.3	200.7	159.5	438.3	509.1	163.7	156.3	141.2	171.0	63.3	64.0	64.0	63.4	230.30	30.37	6994.21
2006/11/14	14:22:32	1179.8	873.0	164.7	240.2	200.8	159.5	439.5	506.6	163.8	156.8	141.4	171.1	64.1	64.0	63.9	63.7	230.20	30.37	6991.18
2006/11/14	14:23:32	1179.6	872.7	164.8	240.4	200.8	159.5	437.9	508.0	163.9	156.8	141.3	171.0	63.8	63.5	63.5	63.3	230.10	30.35	6989.61
2006/11/14	14:24:32	1179.6	869.2	164.9	239.3	201.0	160.0	438.3	511.0	163.6	157.0	141.6	171.3	64.3	63.9	63.7	63.4	230.20	30.37	6993.48
2006/11/14	14:25:32	1179.8	869.7	164.9	239.2	199.2	160.0	439.6	508.8	164.0	156.8	141.6	171.3	64.1	63.8	63.4	63.2	230.20	30.37	6991.18
2006/11/14	14:26:32	1180.4	870.7	165.0	239.9	201.2	160.2	437.6	510.4	163.8	157.0	141.7	171.5	63.9	64.1	63.8	63.7	230.20	30.37	6991.18
2006/11/14	14:27:32	1180.4	872.9	165.1	240.4	200.0	160.2	439.0	506.7	164.6	157.5	141.9	171.5	63.2	64.2	63.7	63.8	230.20	30.35	6986.57
2006/11/14	14:28:32	1180.9	872.4	165.1	239.2	201.0	160.3	438.5	517.2	164.4	157.3	141.9	171.5	64.0	64.0	64.1	63.5	230.20	30.37	6991.18
2006/11/14	14:29:32	1180.7	870.2	165.2	239.2	201.0	160.0	439.0	510.1	164.2	157.1	141.9	171.6	63.8	63.5	63.8	63.3	230.30	30.35	6989.61
2006/11/14	14:30:32	1180.6	867.6	165.4	240.2	199.3	160.4	437.2	515.0	164.4	157.5	141.9	171.5	65.8	63.9	63.6	63.7	230.20	30.37	6991.18
2006/11/14	14:31:32	1180.4	875.4	165.4	239.1	201.3	160.2	438.2	516.0	164.3	157.3	141.9	171.6	64.1	63.9	64.1	64.0	230.20	30.38	6993.48
2006/11/14	14:32:32	1180.9	869.3	165.5	240.1	201.3	160.4	439.3	515.2	164.7	157.5	142.1	171.8	63.6	63.9	63.8	63.5	230.10	30.37	6988.14
2006/11/14	14:33:32	1181.0	872.5	165.6	238.9	200.2	160.5	439.9	507.9	164.7	157.8	142.0	171.8	63.5	63.8	63.2	63.6	230.00	30.35	6980.50
2006/11/14	14:34:32	1180.9	872.4	165.6	241.2	201.2	160.5	442.0	515.7	164.4	157.8	142.0	171.8	63.2	63.8	63.6	63.7	230.10	30.35	6983.54
2006/11/14	14:35:32	1181.8	870.9	165.7	241.4	201.5	160.8	439.8	511.5	164.4	158.0	142.3	172.0	63.8	63.7	63.6	63.4	228.70	30.35	6950.19
2006/11/14	14:36:32	1181.9	874.9	165.7	238.6	200.5	161.0	441.0	516.8	164.0	157.8	142.4	172.0	63.4	63.2	63.8	62.6	230.20	30.37	6991.18
2006/11/14	14:37:32	1181.4	873.2	165.8	240.9	200.5	161.0	439.9	513.4	164.2	157.8	142.6	172.0	63.2	62.8	63.4	62.8	230.00	30.36	6982.80
2006/11/14	14:38:32	1181.1	872.7	165.9	239.2	201.0	160.4	439.2	508.8	164.4	157.6	142.6	172.1	63.4	62.8	63.4	63.2	230.10	30.37	6988.14
2006/11/14	14:39:32	1181.7	873.7	165.8	237.9	200.3	160.4	438.5	516.2	164.1	157.3	142.6	172.1	63.3	63.4	63.4	62.6	230.20	30.34	6984.27
2006/11/14	14:40:32	1181.4	876.6	166.2	240.2	200.5	160.5	440.7	521.8	164.5	157.5	142.6	172.1	62.6	61.5	62.4	61.4	230.10	30.35	6983.54
2006/11/14	14:41:32	1182.4	872.4	165.7	241.4	200.8	160.5	440.3	519.7	164.6	157.3	142.7	172.3	60.8	60.9	60.6	60.6	230.10	30.36	6985.84
2006/11/14	14:42:32	1181.5	873.9	166.1	240.3	201.5	160.3	441.1	515.2	164.6	157.3	142.6	172.3	60.8	60.6	60.4	60.6	230.10	30.38	6990.44

Heat Rise Test
1st Run

Date	Time	TC1	TC2	TC3	TC4	TC5	TC6	TC7	TC8	TC9	TC10	TC11	TC12	TC13	TC14	TC15	TC16	VDC	Amps	Watts
2006/11/14	14:43:32	1181.7	873.1	166.1	240.6	201.5	160.5	440.6	515.0	164.1	157.3	142.6	172.1	61.2	60.2	61.1	60.6	229.40	30.33	6957.70
2006/11/14	14:44:32	1181.8	871.9	166.1	241.6	201.2	160.4	442.5	519.8	163.9	157.0	142.5	172.0	61.1	60.6	61.3	60.0	230.10	30.37	6990.44
2006/11/14	14:45:32	1182.8	866.9	166.0	239.9	200.5	160.5	438.1	521.7	163.9	156.8	142.6	172.1	61.4	60.0	61.3	60.1	230.20	30.38	6993.48
2006/11/14	14:46:32	1182.7	875.4	165.9	239.3	200.2	160.3	440.8	507.2	164.0	157.0	142.5	172.0	60.9	59.2	61.0	59.6	230.10	30.37	6990.44
2006/11/14	14:47:32	1181.7	875.6	166.0	241.3	200.2	160.2	439.6	522.9	163.7	156.8	142.6	172.1	61.0	60.0	61.4	59.4	230.00	30.34	6978.20
2006/11/14	14:48:32	1181.8	875.1	166.2	240.3	200.3	160.5	441.4	512.2	164.0	157.1	142.7	172.1	60.1	59.4	60.4	59.8	230.10	30.36	6985.84
2006/11/14	14:49:32	1182.0	875.1	166.2	240.8	200.0	160.7	441.9	517.2	164.5	157.3	142.7	172.3	60.6	59.8	60.6	60.1	230.20	30.37	6991.18
2006/11/14	14:50:32	1182.7	873.4	166.2	241.2	200.0	160.7	442.5	518.2	164.2	157.3	142.6	172.3	61.0	60.6	60.1	59.9	230.20	30.38	6995.78
2006/11/14	14:51:32	1182.4	872.9	166.4	240.4	200.5	160.7	441.7	518.6	164.5	157.5	143.0	172.3	60.1	59.6	60.1	59.4	230.20	30.37	6991.18
2006/11/14	14:52:32	1182.7	875.1	166.7	239.3	200.2	161.0	442.3	518.0	164.2	157.5	143.2	172.8	60.6	59.2	61.4	59.6	230.20	30.35	6986.57
2006/11/14	14:53:32	1182.0	872.4	166.7	239.6	200.0	160.4	441.8	516.0	164.1	157.3	143.2	172.6	60.6	58.2	60.0	58.6	230.10	30.36	6988.14
2006/11/14	14:54:32	1182.4	875.2	166.8	241.2	201.2	161.2	443.1	520.7	164.9	157.5	143.2	172.8	59.8	59.1	59.6	58.9	230.00	30.35	6980.50
2006/11/14	14:55:32	1182.1	876.7	166.8	240.4	200.2	161.0	441.5	516.9	164.9	157.5	143.4	172.8	59.6	59.1	59.5	59.3	230.30	30.37	6994.21
2006/11/14	14:56:32	1181.5	870.0	166.9	240.4	200.2	161.5	440.9	517.8	164.6	158.0	143.6	172.8	60.6	59.3	60.0	59.0	230.10	30.37	6990.44
2006/11/14	14:57:32	1182.2	871.3	167.0	239.3	200.7	161.6	440.1	518.5	165.3	158.3	143.4	173.0	60.1	59.3	60.9	59.9	230.10	30.37	6988.14
2006/11/14	14:58:32	1181.1	876.5	167.1	240.9	201.0	161.6	440.8	517.2	165.5	158.0	143.6	173.0	61.6	59.7	60.6	60.0	229.90	30.35	6977.47
2006/11/14	14:59:32	1182.4	873.5	167.2	240.6	200.7	161.8	444.3	515.7	165.5	158.5	143.7	173.3	60.6	59.3	60.4	59.8	230.00	30.34	6981.23
2006/11/14	15:00:32	1182.4	874.3	167.1	241.9	200.5	161.6	444.0	520.2	165.3	158.2	143.7	173.3	59.9	58.9	59.5	59.2	230.20	30.36	6988.87
2006/11/14	15:01:32	1183.0	873.2	167.4	240.9	200.8	161.9	440.6	528.0	165.4	158.5	143.8	173.5	61.0	59.3	60.4	59.7	230.00	30.36	6982.80
2006/11/14	15:02:32	1182.7	876.3	167.6	240.8	201.5	162.3	443.5	522.2	165.9	158.5	144.0	173.5	60.6	60.4	60.6	59.9	230.10	30.36	6988.14
2006/11/14	15:03:32	1183.4	870.9	167.7	241.4	201.7	162.4	443.1	518.9	165.8	158.5	144.0	173.5	60.9	58.6	60.9	59.1	230.20	30.36	6988.87
2006/11/14	15:04:32	1183.5	873.7	167.8	240.1	201.3	162.4	443.0	522.1	165.8	158.8	144.0	173.6	59.5	59.7	60.0	59.0	230.10	30.38	6990.44
2006/11/14	15:05:32	1183.1	869.9	167.9	241.2	201.5	162.3	442.5	522.7	166.0	158.8	143.9	173.5	60.4	60.8	60.4	60.1	229.50	30.29	6951.56
2006/11/14	15:06:32	1182.4	876.2	167.8	239.4	201.5	162.5	446.5	524.4	165.8	158.7	144.0	173.5	60.8	60.8	61.1	59.0	230.10	30.36	6985.84
2006/11/14	15:07:32	1182.9	872.2	167.9	240.4	202.0	162.3	442.5	519.8	165.5	158.8	144.3	173.6	60.4	57.8	60.2	58.2	230.00	30.35	6980.50
2006/11/14	15:08:32	1182.9	875.4	168.0	241.1	202.0	162.3	444.2	518.9	165.7	158.8	144.3	173.8	61.1	59.8	60.8	59.7	230.20	30.38	6993.48
2006/11/14	15:09:32	1183.9	873.7	168.1	239.8	202.0	162.5	442.8	523.3	165.8	158.8	144.3	173.8	60.6	59.8	60.4	59.9	230.00	30.37	6985.10
2006/11/14	15:10:32	1184.7	872.9	168.1	241.6	201.2	162.1	444.1	519.5	165.6	158.5	144.3	173.8	60.0	58.6	60.2	58.6	230.10	30.36	6985.84
2006/11/14	15:11:32	1183.7	874.5	168.3	241.7	201.8	162.7	443.3	522.5	165.9	158.8	144.4	173.8	60.8	59.2	59.8	59.3	230.10	30.35	6983.54
2006/11/14	15:12:32	1183.4	877.2	168.2	241.3	201.8	162.3	442.0	526.2	165.9	158.7	144.5	174.0	60.4	59.5	60.4	59.4	229.50	30.37	6972.21
2006/11/14	15:13:32	1183.4	874.1	168.3	241.4	202.0	163.3	443.6	515.2	166.0	159.3	144.4	174.0	59.9	60.1	60.2	59.9	229.80	30.32	6967.54
2006/11/14	15:14:32	1183.4	874.5	168.4	241.9	201.5	162.7	443.0	520.2	166.5	159.3	144.4	174.0	59.5	59.6	60.4	59.8	229.90	30.32	6970.57
2006/11/14	15:15:32	1183.8	874.3	168.5	242.7	201.7	163.0	441.8	516.6	166.3	159.3	144.5	174.0	60.6	59.1	59.4	59.6	229.40	30.30	6950.82
2006/11/14	15:16:32	1183.2	873.3	168.6	242.1	201.8	162.9	443.0	520.0	166.3	159.0	144.6	174.1	60.1	57.8	59.5	58.8	230.10	30.35	6983.54
2006/11/14	15:17:32	1184.9	873.2	168.8	241.9	202.0	162.4	441.7	523.0	166.5	159.0	144.6	174.1	60.6	58.8	59.7	59.2	230.10	30.36	6985.84
2006/11/14	15:18:32	1183.5	875.6	168.8	241.4	201.7	163.3	445.5	521.3	166.5	159.3	144.9	174.3	60.4	59.2	60.0	59.2	230.10	30.34	6981.23
2006/11/14	15:19:32	1184.4	871.1	168.9	242.7	201.7	163.6	444.6	520.5	166.7	159.0	144.8	174.3	61.3	59.8	59.7	59.1	229.90	30.34	6975.17
2006/11/14	15:20:32	1183.6	873.7	168.9	241.6	201.0	163.4	442.6	520.1	166.5	159.5	144.9	174.3	59.9	59.2	59.7	59.2	230.20	30.31	6977.36
2006/11/14	15:21:32	1184.4	876.2	169.0	241.1	201.5	163.3	445.3	527.0	166.8	160.0	144.8	174.3	61.2	59.1	60.4	60.4	229.90	30.27	6959.07
2006/11/14	15:22:32	1183.8	876.6	169.3	242.4	202.0	164.0	445.0	525.9	166.9	159.8	145.1	174.5	60.4	59.2	59.4	59.5	229.70	30.32	6964.50
2006/11/14	15:23:32	1184.6	874.9	169.3	241.3	201.7	164.0	445.5	527.7	167.0	159.5	145.1	174.5	60.8	58.6	61.2	59.1	230.00	30.35	6982.80
2006/11/14	15:24:32	1182.9	876.7	169.3	240.8	201.7	163.6	445.8	524.5	166.9	160.0	145.3	174.5	60.6	58.8	60.6	59.2	230.30	30.38	6998.82
2006/11/14	15:25:32	1183.7	878.1	169.3	240.8	202.5	163.8	444.5	520.3	166.7	159.8	145.1	174.6	60.6	60.6	60.6	59.5	230.00	30.35	6980.50
2006/11/14	15:26:32	1183.9	873.8	169.4	239.8	202.5	164.0	444.1	522.2	167.1	160.2	145.3	174.6	61.0	60.6	61.1	60.4	229.90	30.34	6975.17
2006/11/14	15:27:32	1184.4	875.7	169.4	242.1	203.0	164.3	444.4	525.7	167.1	160.3	145.3	174.6	60.6	60.6	61.6	60.4	229.70	30.31	6962.21
2006/11/14	15:28:32	1183.9	873.7	169.5	241.4	202.0	164.4	445.5	525.9	167.1	160.0	145.3	174.6	60.8	59.6	61.1	60.2	230.10	30.35	6983.54
2006/11/14	15:29:32	1185.6	874.2	169.5	241.6	202.2	163.9	446.5	521.4	166.9	160.3	145.3	174.8	61.0	59.0	61.1	59.1	230.00	30.33	6975.90
2006/11/14	15:30:32	1184.8	877.5	169.6	240.8	202.7	164.3	447.5	529.6	167.5	160.0	145.4	174.8	61.0	59.8	61.4	59.9	230.00	30.32	6973.60
2006/11/14	15:31:32	1186.6	874.3	169.8	241.7	202.3	164.2	445.4	533.2	167.9	160.2	145.5	175.0	60.6	59.3	60.4	59.2	230.20	30.36	6988.87
2006/11/14	15:32:32	1184.4	874.8	169.9	242.4	202.2	164.1	445.8	528.7	166.9	160.0	145.6	175.0	60.8	59.6	59.7	59.0	230.30	30.38	6996.51
2006/11/14	15:33:32	1184.8	876.3	170.0	242.2	202.5	164.6	446.5	530.2	167.5	160.2	145.6	175.0	60.6	59.7	60.6	59.6	230.20	30.37	6991.18
2006/11/14	15:34:32	1185.8	876.9	169.8	241.4	201.8	164.2	446.5	527.0	167.2	160.0	145.8	175.0	60.8	59.9	61.1	59.4	230.10	30.34	6987.30
2006/11/14	15:35:32	1184.9	876.3	170.1	242.9	201.7	164.5	445.7	527.5	168.1	160.8	145.5	175.0	60.8	61.1	60.4	60.6	230.00	30.35	6980.50
2006/11/14	15:36:32	1185.3	875.2	170.1	242.9	202.3	164.4	446.6	525.0	168.2	160.5	145.8	175.3	61.8	61.2	60.9	60.9	230.10	30.37	6991.18
2006/11/14	15:37:32	1185.5	877.3	170.3	242.7	202.0	164.4	446.0	528.4	168.3	160.5	145.8	175.3	61.7	61.5	61.4	60.8	230.10	30.37	6988.14
2006/11/14	15:38:32	1185.2	876.6	170.3	242.5	202.7	164.8	445.3	530.2	168.1	161.0	146.0	175.5	61.7	61.8	61.3	60.9	230.20	30.35	6986.57

Heat Rise Test
1st Run

Date	Time	TC1	TC2	TC3	TC4	TC5	TC6	TC7	TC8	TC9	TC10	TC11	TC12	TC13	TC14	TC15	TC16	VDC	Amps	Watts
2006/11/14	15:39:32	1185.4	874.4	170.4	241.2	202.5	165.0	447.7	529.1	168.3	161.0	146.1	175.5	61.7	60.8	61.8	60.4	230.10	30.35	6991.18
2006/11/14	15:40:32	1185.5	875.9	170.6	243.2	202.8	165.5	447.3	527.2	168.5	161.4	146.3	175.5	62.0	60.6	61.8	60.8	230.20	30.36	6988.87
2006/11/14	15:41:32	1186.2	875.2	170.8	243.7	203.5	165.5	447.6	531.3	168.8	161.7	146.3	175.7	62.3	61.2	61.2	61.3	229.80	30.32	6967.54
2006/11/14	15:42:32	1185.1	877.6	170.8	242.9	203.8	165.6	447.3	534.4	168.8	161.5	146.3	175.7	61.5	60.9	62.3	61.3	230.00	30.33	6975.90
2006/11/14	15:43:32	1184.9	875.9	171.0	241.4	203.3	165.6	447.3	523.2	168.3	161.7	146.5	175.8	61.7	61.6	62.2	60.6	230.10	30.35	6983.54
2006/11/14	15:44:32	1184.8	876.8	171.0	244.5	203.6	165.6	446.8	532.1	168.8	162.0	146.5	175.8	62.2	61.4	61.9	61.1	230.10	30.35	6986.57
2006/11/14	15:45:32	1185.6	879.2	171.1	243.2	203.1	165.5	446.3	531.7	169.3	162.1	146.6	176.0	61.1	62.0	62.4	61.5	230.10	30.36	6985.84
2006/11/14	15:46:32	1185.1	878.7	171.3	242.5	203.6	166.1	446.3	529.1	169.5	161.9	146.8	176.0	61.8	61.7	61.7	60.6	230.20	30.36	6988.87
2006/11/14	15:47:32	1185.1	874.8	171.3	243.2	203.0	165.7	448.0	528.4	169.3	162.0	146.6	176.0	61.6	61.0	62.3	61.2	230.10	30.35	6983.54
2006/11/14	15:48:32	1186.1	875.2	171.3	243.4	204.1	166.0	447.3	532.3	169.4	162.1	146.8	176.3	63.2	61.6	61.0	61.1	230.20	30.37	6991.18
2006/11/14	15:49:32	1184.9	880.3	171.5	241.9	203.2	166.3	448.9	528.0	169.4	162.2	147.0	176.3	61.5	60.6	61.7	60.9	230.20	30.37	6991.18
2006/11/14	15:50:32	1185.1	874.9	171.5	244.2	204.2	166.5	448.1	535.8	169.6	162.7	147.0	176.3	61.8	61.2	62.3	61.1	230.20	30.36	6988.87
2006/11/14	15:51:32	1186.4	871.7	171.5	242.4	203.5	166.3	448.2	535.2	169.8	162.0	147.0	176.3	62.1	61.4	62.2	61.0	230.20	30.36	6988.87
2006/11/14	15:52:32	1186.0	874.6	171.8	242.7	202.7	166.4	447.9	532.9	170.3	162.7	147.0	176.3	60.8	61.1	60.9	61.4	230.10	30.37	6988.14
2006/11/14	15:53:32	1185.9	880.7	172.0	242.7	203.2	166.2	449.3	529.2	169.8	163.0	147.1	176.5	61.1	61.9	61.5	61.5	230.00	30.35	6980.50
2006/11/14	15:54:32	1186.8	878.2	171.8	242.4	203.7	166.2	447.7	527.7	169.8	162.9	147.3	176.5	61.9	61.8	61.4	61.5	230.20	30.34	6984.27
2006/11/14	15:55:32	1187.0	873.3	172.0	244.2	204.0	166.3	448.4	532.3	169.8	162.9	147.1	176.5	61.7	61.5	61.7	61.5	230.00	30.35	6985.10
2006/11/14	15:56:32	1187.6	879.7	172.1	242.9	203.5	166.5	448.2	530.2	170.3	163.3	147.3	176.5	60.4	61.8	61.4	61.5	230.10	30.36	6988.87
2006/11/14	15:57:32	1185.9	878.4	172.3	242.4	203.5	166.3	449.0	530.7	170.3	163.1	147.3	176.5	60.4	62.0	61.1	61.3	230.10	30.37	6988.14
2006/11/14	15:58:32	1186.4	876.6	172.3	245.6	203.6	167.0	449.0	529.3	170.6	163.5	147.5	176.7	61.9	62.0	61.4	61.3	229.90	30.37	6982.06
2006/11/14	15:59:32	1185.6	876.2	172.5	243.8	204.6	166.7	450.4	535.2	170.4	163.1	147.3	176.8	61.2	61.8	62.0	61.5	230.10	30.36	6988.14
2006/11/14	16:00:32	1186.4	877.6	172.5	243.7	204.1	166.7	451.7	534.5	170.4	163.3	147.5	176.8	60.2	62.1	61.7	61.8	230.10	30.37	6988.14
2006/11/14	16:01:32	1187.2	875.7	172.3	244.2	204.0	167.0	449.5	534.4	170.3	163.3	147.8	176.8	62.1	61.5	61.0	60.6	230.20	30.35	6986.57
2006/11/14	16:02:32	1186.6	877.3	172.5	245.1	204.0	166.7	450.0	532.4	170.8	163.5	147.8	176.8	61.9	61.6	62.3	62.1	230.10	30.37	6988.14
2006/11/14	16:03:32	1186.1	879.8	172.5	243.4	203.8	167.1	448.6	533.9	170.9	163.4	147.7	176.8	61.7	61.7	62.2	62.1	230.00	30.34	6978.20
2006/11/14	16:04:32	1186.2	880.0	172.8	243.8	204.5	166.8	449.2	534.7	171.3	163.6	147.8	177.0	60.9	61.9	61.4	61.6	230.30	30.36	6991.91
2006/11/14	16:05:32	1186.4	880.0	172.6	243.2	203.7	167.0	446.0	531.8	171.0	163.8	147.8	177.0	61.3	62.6	61.7	61.5	229.90	30.32	6970.57
2006/11/14	16:06:32	1186.4	879.5	172.8	243.7	203.6	166.5	449.8	535.2	171.1	163.8	148.0	177.0	60.6	62.4	61.6	62.0	230.20	30.37	6991.18
2006/11/14	16:07:32	1185.6	883.8	172.8	243.2	203.8	167.1	448.9	530.2	170.9	163.7	148.0	177.0	61.6	62.2	61.7	61.4	230.20	30.37	6991.18
2006/11/14	16:08:32	1186.3	880.3	173.0	241.9	204.6	167.2	448.5	530.9	171.0	163.8	148.2	177.0	61.2	60.6	62.0	60.6	230.20	30.37	6993.48
2006/11/14	16:09:32	1186.2	878.9	173.0	243.4	203.7	167.3	449.5	533.4	171.3	164.0	148.0	177.2	61.6	61.9	61.5	61.3	230.20	30.36	6988.87
2006/11/14	16:10:32	1186.1	881.0	173.0	244.9	204.5	167.2	450.4	534.1	171.1	164.0	148.3	177.3	62.0	62.2	62.3	61.7	230.20	30.37	6991.18
2006/11/14	16:11:32	1187.5	879.7	173.1	244.0	205.0	167.6	449.3	536.7	170.9	163.8	148.3	177.3	61.7	61.8	61.7	60.8	230.20	30.36	6988.87
2006/11/14	16:12:32	1187.2	880.8	173.3	244.6	204.5	167.8	451.1	533.9	171.0	164.0	148.3	177.3	62.2	61.7	61.3	61.0	230.00	30.36	6982.80
2006/11/14	16:13:32	1186.6	880.5	173.5	242.7	204.5	167.5	450.3	535.2	171.1	164.2	148.3	177.3	61.8	61.7	61.6	61.2	230.10	30.37	6990.44
2006/11/14	16:14:32	1187.0	880.2	173.5	244.6	205.1	167.9	449.0	533.4	171.0	164.2	148.5	177.5	62.2	61.7	61.6	60.9	230.30	30.34	6990.34
2006/11/14	16:15:32	1187.0	882.9	173.5	246.0	204.3	167.9	450.0	534.7	172.0	164.8	148.5	177.5	61.4	61.4	61.8	62.1	230.20	30.36	6988.87
2006/11/14	16:16:32	1188.0	877.8	173.8	245.0	204.0	167.7	449.0	537.0	171.8	164.7	148.5	177.5	61.1	61.1	61.5	61.8	230.10	30.35	6983.54
2006/11/14	16:17:32	1186.8	878.2	173.8	244.7	205.0	168.1	451.2	532.8	172.1	164.8	148.7	177.7	61.4	61.3	61.4	61.5	230.10	30.33	6978.93
2006/11/14	16:18:32	1186.6	875.7	173.8	244.0	205.0	167.9	451.1	536.1	171.8	164.7	148.7	177.8	60.8	61.0	61.8	61.3	230.20	30.37	6991.18
2006/11/14	16:19:32	1186.8	883.4	174.0	243.9	204.0	168.0	450.3	533.4	172.0	164.5	148.7	177.8	61.2	61.4	60.9	61.3	230.10	30.37	6988.14
2006/11/14	16:20:32	1187.6	877.6	174.0	245.1	204.6	168.1	450.6	534.4	172.3	164.9	148.8	177.8	61.2	61.3	61.3	61.5	230.30	30.35	6992.64
2006/11/14	16:21:32	1187.4	882.6	174.0	244.2	204.0	167.8	450.9	533.6	172.0	164.8	149.0	177.8	61.1	61.5	60.8	61.5	230.30	30.36	6991.91
2006/11/14	16:22:32	1188.0	876.4	174.0	244.9	205.5	168.0	451.3	536.4	171.8	165.2	149.0	178.0	60.4	61.1	61.1	61.4	230.10	30.35	6983.54
2006/11/14	16:23:32	1188.2	881.5	174.0	243.4	204.7	168.3	453.6	535.3	172.5	165.2	149.0	178.0	60.6	62.0	61.5	61.3	230.10	30.36	6990.44
2006/11/14	16:24:32	1187.6	877.2	174.1	244.4	204.8	168.0	449.0	536.1	172.5	165.1	149.0	178.2	62.0	62.3	61.4	61.7	229.90	30.33	6972.87
2006/11/14	16:25:32	1187.4	877.9	174.3	244.9	205.2	168.4	451.9	533.4	172.3	165.2	149.0	178.0	61.1	62.0	61.0	61.8	230.10	30.35	6983.54
2006/11/14	16:26:32	1189.3	882.1	174.3	243.2	205.5	168.4	448.0	534.2	172.0	165.2	149.3	178.2	60.4	60.4	61.6	60.4	229.90	30.34	6975.17
2006/11/14	16:27:32	1188.1	880.6	174.5	244.8	205.2	168.4	453.3	531.9	172.5	165.2	149.4	178.3	60.9	61.0	61.1	60.8	229.80	30.34	6972.13
2006/11/14	16:28:32	1187.6	879.7	174.5	244.2	205.5	167.9	450.0	531.2	172.8	165.5	149.4	178.3	60.8	61.8	61.3	61.7	230.10	30.37	6988.14
2006/11/14	16:29:32	1186.9	879.8	174.5	244.7	205.3	168.4	451.4	538.4	171.8	165.0	149.5	178.3	61.9	61.6	61.6	61.2	230.10	30.34	6981.23
2006/11/14	16:30:32	1188.0	880.3	174.6	244.0	205.3	168.8	450.6	535.8	172.6	165.8	149.5	178.3	61.6	61.7	61.8	61.6	230.10	30.36	6988.87
2006/11/14	16:31:32	1188.2	877.2	174.8	244.6	204.6	168.8	452.4	538.9	172.5	165.8	149.5	178.5	61.6	61.8	62.4	62.0	230.20	30.34	6994.21
2006/11/14	16:32:32	1189.1	881.1	174.8	244.2	205.3	168.9	452.3	539.3	173.0	165.6	149.5	178.5	61.4	61.6	61.5	61.6	230.50	30.36	6997.98
2006/11/14	16:33:32	1188.6	877.1	175.0	245.5	205.0	168.8	451.5	536.4	173.3	166.0	149.8	178.5	62.1	62.4	62.8	62.3	230.00	30.35	6980.50
2006/11/14	16:34:32	1188.4	881.1	174.8	245.2	204.7	169.3	450.9	533.6	172.6	166.1	149.9	178.7	62.3	62.3	62.2	62.0	230.10	30.36	6985.84

Heat Rise Test
1st Run

Date	Time	TC1	TC2	TC3	TC4	TC5	TC6	TC7	TC8	TC9	TC10	TC11	TC12	TC13	TC14	TC15	TC16	VDC	Amps	Watts
2006/11/14	16:35:32	1188.6	879.0	175.0	245.0	205.1	168.9	452.5	535.7	172.8	166.0	149.9	178.7	62.6	62.6	62.6	62.0	230.10	30.36	6990.44
2006/11/14	16:36:32	1187.7	879.9	175.3	243.8	206.2	169.3	450.8	539.7	173.0	166.0	150.0	178.7	62.6	61.7	62.6	62.4	230.20	30.34	6984.27
2006/11/14	16:37:32	1188.9	884.0	175.3	244.7	206.5	169.0	453.0	538.8	173.1	166.0	149.9	178.7	62.6	62.2	62.6	62.6	230.10	30.35	6986.57
2006/11/14	16:38:32	1189.7	881.1	175.3	244.9	205.3	169.5	450.5	537.9	173.8	166.3	150.1	178.8	62.0	62.6	62.4	62.8	230.20	30.36	6988.87
2006/11/14	16:39:32	1189.6	875.4	175.5	243.5	206.0	169.5	451.8	544.0	173.5	166.1	150.2	178.8	62.8	62.0	62.1	62.3	230.10	30.36	6985.84
2006/11/14	16:40:32	1189.6	879.2	175.5	244.5	206.4	169.4	451.4	538.2	173.3	166.4	150.3	179.0	62.6	62.3	62.2	62.6	230.20	30.36	6988.87
2006/11/14	16:41:32	1188.6	879.8	175.5	243.7	205.7	169.8	454.3	533.1	173.0	166.3	150.3	179.0	62.2	61.6	62.3	62.6	230.00	30.33	6975.90
2006/11/14	16:42:32	1189.1	879.8	175.5	244.9	205.3	169.3	453.8	542.0	173.1	165.8	150.5	179.0	62.6	60.4	61.3	60.6	230.00	30.29	6966.70
2006/11/14	16:43:32	1188.3	881.1	175.7	245.8	205.8	169.0	453.8	538.2	172.6	165.7	150.5	179.0	61.4	59.7	60.6	60.0	230.10	30.35	6983.54
2006/11/14	16:44:32	1188.4	880.0	175.7	244.7	205.7	169.3	452.8	536.8	173.0	165.7	150.5	179.2	61.1	60.0	60.6	60.1	230.00	30.35	6980.50
2006/11/14	16:45:32	1188.2	883.4	175.5	245.9	205.1	169.3	453.3	535.6	172.5	165.7	150.5	179.0	61.2	59.8	61.2	60.4	230.00	30.37	6992.00
2006/11/14	16:46:32	1188.4	881.4	175.7	244.6	203.7	169.3	452.9	534.7	172.5	165.9	150.4	179.0	61.8	61.8	61.0	60.1	230.20	30.37	6991.18
2006/11/14	16:47:32	1189.8	876.4	175.5	244.5	205.5	169.3	450.5	540.7	173.1	166.0	150.4	179.0	60.9	61.8	61.3	61.2	230.10	30.35	6986.57
2006/11/14	16:48:32	1188.7	884.9	175.8	246.7	205.0	169.9	452.1	533.0	173.5	166.2	150.4	179.2	61.1	61.7	62.0	61.8	230.30	30.38	6996.51
2006/11/14	16:49:32	1189.4	880.0	175.8	244.8	205.0	169.9	451.8	542.2	173.5	166.4	150.5	179.2	61.8	62.2	60.9	61.6	230.10	30.35	6983.54
2006/11/14	16:50:32	1190.7	883.2	176.0	244.8	205.2	170.0	455.6	540.9	173.6	166.4	150.6	179.2	61.1	61.5	61.2	61.5	229.70	30.32	6964.50
2006/11/14	16:51:32	1188.9	881.1	176.2	244.9	206.0	169.5	453.3	540.2	173.5	166.7	150.8	179.4	61.9	61.6	61.2	61.3	230.10	30.36	6985.84
2006/11/14	16:52:32	1189.9	881.9	176.3	245.9	205.6	169.9	451.9	536.1	173.8	166.9	150.9	179.5	61.3	62.3	61.8	61.5	230.20	30.37	6991.18
2006/11/14	16:53:32	1189.9	878.9	176.5	246.0	206.1	169.9	455.3	535.3	174.3	166.9	151.1	179.7	61.3	62.1	61.9	61.9	230.10	30.35	6983.54
2006/11/14	16:54:32	1189.2	882.6	176.5	246.1	205.5	169.8	450.6	539.3	174.3	167.2	151.1	179.7	62.8	61.0	61.6	61.6	230.10	30.36	6985.84
2006/11/14	16:55:32	1189.8	886.7	176.5	245.8	205.1	170.3	454.6	536.1	174.1	167.1	151.2	179.7	62.6	61.5	62.2	61.3	230.20	30.37	6991.18
2006/11/14	16:56:32	1189.7	878.9	176.8	246.8	205.6	170.6	456.4	537.4	174.3	167.1	151.1	179.9	62.3	62.1	62.6	61.9	230.20	30.36	6988.87
2006/11/14	16:57:32	1189.3	880.7	176.8	244.2	206.2	170.4	454.0	543.3	174.8	167.3	151.2	179.9	63.1	62.8	62.2	62.3	230.20	30.36	6991.91
2006/11/14	16:58:32	1190.1	879.8	176.8	246.2	206.0	170.6	451.3	539.5	175.3	167.8	151.3	179.9	62.6	63.2	62.4	62.6	230.30	30.35	6989.61
2006/11/14	16:59:32	1189.6	883.5	177.0	246.7	205.5	170.6	454.4	539.2	174.8	167.8	151.3	179.9	62.2	62.6	62.1	62.6	230.20	30.36	6988.87
2006/11/14	17:00:32	1189.2	884.0	177.0	245.8	206.2	170.8	454.3	535.0	174.3	167.9	151.4	180.0	61.7	62.8	62.4	62.4	230.00	30.34	6978.20
2006/11/14	17:01:32	1190.1	882.2	177.2	245.8	205.1	170.5	454.1	538.4	175.0	167.9	151.5	180.0	62.8	63.1	63.0	62.6	230.10	30.35	6983.54
2006/11/14	17:02:32	1189.6	884.3	177.2	247.2	206.4	170.9	452.9	539.4	174.3	167.8	151.6	180.0	61.9	63.0	62.6	62.4	229.70	30.33	6966.80
2006/11/14	17:03:32	1189.6	881.6	177.3	247.5	205.7	171.0	455.6	538.2	175.5	167.9	151.7	180.2	62.6	62.6	62.6	62.6	230.20	30.37	6991.18
2006/11/14	17:04:32	1190.4	879.0	177.3	246.4	206.0	171.3	452.3	538.9	175.2	168.2	151.8	180.2	63.2	62.6	63.3	62.6	230.20	30.35	6986.57
2006/11/14	17:05:32	1191.1	878.3	177.3	245.5	206.0	171.3	454.1	537.4	175.0	168.3	151.8	180.2	64.6	63.3	62.8	61.9	230.30	30.38	6996.51
2006/11/14	17:06:32	1190.4	879.8	177.5	246.7	206.8	171.3	454.8	537.2	175.3	168.3	151.8	180.2	61.7	64.0	63.1	62.8	230.20	30.37	6991.18
2006/11/14	17:07:32	1190.1	880.2	177.7	247.0	206.8	170.9	453.0	540.6	175.5	168.8	152.0	180.5	61.8	63.2	62.8	62.8	230.00	30.35	6980.50
2006/11/14	17:08:32	1190.1	878.6	177.8	245.8	206.7	171.5	452.8	545.7	175.5	168.5	152.0	180.5	62.1	63.0	63.1	62.8	230.20	30.36	6988.87
2006/11/14	17:09:32	1189.9	881.9	177.8	246.7	206.9	171.5	455.4	538.2	175.2	168.8	152.1	180.7	61.8	63.0	62.8	62.8	230.30	30.36	6991.91
2006/11/14	17:10:32	1191.6	881.6	177.8	245.9	207.3	171.3	452.5	540.7	175.8	168.8	152.2	180.7	62.6	63.2	63.5	62.8	230.10	30.36	6985.84
2006/11/14	17:11:32	1190.7	882.7	178.0	245.8	206.9	171.5	456.7	540.6	175.8	169.0	152.2	180.7	62.2	63.3	63.2	63.1	230.20	30.37	6991.18
2006/11/14	17:12:32	1191.4	878.9	178.2	246.2	207.1	171.8	454.3	540.9	175.8	169.0	152.4	180.7	62.2	63.2	63.3	62.8	230.10	30.37	6988.14
2006/11/14	17:13:32	1190.9	883.3	178.2	246.0	207.5	172.0	454.3	540.4	175.5	169.1	152.4	180.9	62.1	63.0	62.6	63.3	230.20	30.37	6991.18
2006/11/14	17:14:32	1191.0	882.9	178.3	246.4	207.3	171.5	455.8	545.7	175.7	169.5	152.6	181.0	63.3	62.6	63.2	62.8	230.10	30.37	6988.14
2006/11/14	17:15:32	1191.8	882.9	178.3	245.5	207.7	171.8	455.8	539.3	176.5	169.3	152.5	181.0	62.6	63.0	62.8	63.0	230.10	30.36	6985.84
2006/11/14	17:16:32	1191.6	882.6	178.5	246.3	206.8	172.0	454.5	535.2	176.2	169.3	152.6	181.2	61.7	62.8	63.0	63.0	230.10	30.36	6988.14
2006/11/14	17:17:32	1190.4	885.6	178.5	246.9	206.7	172.0	456.0	534.4	176.8	169.6	152.7	181.2	62.8	63.4	63.3	63.0	229.90	30.33	6972.87
2006/11/14	17:18:32	1191.4	881.1	178.5	247.9	207.2	172.0	456.5	540.8	176.5	169.3	152.7	181.2	63.0	63.9	63.5	63.0	230.10	30.35	6983.54
2006/11/14	17:19:32	1190.9	881.8	178.7	247.0	207.6	172.0	455.3	543.9	176.7	169.8	152.8	181.2	61.9	63.6	63.1	62.6	230.30	30.37	6994.21
2006/11/14	17:20:32	1191.0	886.2	178.7	246.8	207.7	171.8	454.0	538.4	176.5	169.5	152.9	181.4	63.0	63.4	62.8	63.1	230.20	30.37	6993.48
2006/11/14	17:21:32	1191.1	883.5	178.7	246.6	208.3	172.8	454.6	541.6	177.0	169.8	152.9	181.4	62.1	63.7	63.0	63.0	230.20	30.36	6991.18
2006/11/14	17:22:32	1191.8	885.9	178.7	245.9	207.1	172.3	456.7	534.9	176.8	169.8	152.9	181.5	61.9	63.4	63.0	62.6	230.10	30.35	6983.54
2006/11/14	17:23:32	1191.3	886.6	179.0	246.5	207.9	172.3	457.8	538.4	177.0	169.9	152.9	181.5	62.6	62.6	63.4	62.4	230.20	30.37	6991.18
2006/11/14	17:24:32	1191.1	884.0	179.0	247.7	207.5	172.5	457.0	535.4	177.2	169.8	153.0	181.5	62.4	63.0	63.1	63.0	230.20	30.37	6991.18
2006/11/14	17:25:32	1190.7	881.4	179.0	246.4	207.1	172.5	456.0	541.9	176.8	170.3	153.2	181.7	62.0	63.2	63.1	63.4	230.40	30.38	6999.55
2006/11/14	17:26:32	1191.5	883.4	179.0	247.4	208.0	172.5	456.8	541.9	177.5	170.1	153.2	181.7	63.0	63.2	63.3	63.1	230.20	30.35	6986.57
2006/11/14	17:27:32	1190.4	882.5	179.2	248.4	207.7	172.6	457.5	538.5	177.0	169.9	153.3	181.7	62.1	63.2	63.4	63.6	230.20	30.35	6986.57
2006/11/14	17:28:32	1190.9	882.9	179.2	247.2	208.0	172.5	457.0	543.4	177.0	170.1	153.2	181.7	62.0	63.4	62.8	63.2	230.10	30.37	6988.14
2006/11/14	17:29:32	1191.1	885.6	179.4	247.9	207.3	172.5	456.5	546.2	177.5	170.3	153.3	181.7	61.8	64.4	62.6	63.2	230.00	30.36	6985.10
2006/11/14	17:30:32	1191.1	884.2	179.4	246.3	207.5	172.5	455.2	544.3	177.2	170.3	153.5	181.7	62.8	63.2	63.5	63.2	230.00	30.34	6978.20

Heat Rise Test
1st Run

Date	Time	TC1	TC2	TC3	TC4	TC5	TC6	TC7	TC8	TC9	TC10	TC11	TC12	TC13	TC14	TC15	TC16	VDC	Amps	Watts
2006/11/14	17:31:32	1191.4	882.1	179.5	248.9	208.0	172.5	458.2	543.5	177.5	170.5	153.5	181.7	62.3	62.8	63.1	63.2	230.20	30.37	6991.18
2006/11/14	17:32:32	1192.5	876.8	179.5	246.9	207.9	173.0	455.8	542.2	177.3	170.0	153.5	181.9	62.6	63.0	63.4	63.0	230.10	30.34	6981.23
2006/11/14	17:33:32	1192.2	885.3	179.5	246.2	207.2	172.8	456.3	540.8	177.3	170.6	153.6	181.9	63.0	63.2	62.2	63.2	230.10	30.35	6983.54
2006/11/14	17:34:32	1191.1	881.4	179.5	246.7	207.6	172.8	457.3	537.0	176.7	170.3	153.9	182.0	61.8	62.8	62.2	61.8	229.60	30.30	6956.88
2006/11/14	17:35:32	1191.4	884.5	179.7	246.0	206.6	172.6	456.2	540.5	177.8	170.4	153.8	182.0	62.6	62.4	62.6	62.8	230.30	30.37	6996.51
2006/11/14	17:36:32	1191.3	882.7	179.7	246.7	207.4	172.8	457.1	538.7	177.3	170.3	153.8	182.0	63.2	62.6	63.0	62.6	230.20	30.33	6985.00
2006/11/14	17:37:32	1192.1	883.6	179.7	246.1	207.8	173.1	457.3	544.3	177.0	170.6	153.9	182.0	62.3	63.5	63.4	62.4	229.50	30.37	6972.21
2006/11/14	17:38:32	1192.1	883.1	179.9	246.9	207.0	172.8	457.0	542.0	177.7	170.5	154.0	182.2	62.2	62.4	63.0	62.8	230.10	30.36	6988.87
2006/11/14	17:39:32	1191.8	887.3	180.0	247.9	207.6	173.3	458.8	775.5	177.0	170.3	154.0	182.2	63.2	62.8	63.0	62.8	230.20	30.37	6991.18
2006/11/14	17:40:32	1192.2	882.9	180.0	247.7	208.3	173.0	456.5	750.0	177.8	170.8	154.1	182.2	62.4	63.0	62.4	62.8	230.10	30.36	6985.84
2006/11/14	17:41:32	1191.6	885.4	180.0	247.0	207.6	173.3	458.2	757.8	177.8	170.4	154.1	182.2	62.1	62.8	62.6	62.6	229.80	30.29	6960.64
2006/11/14	17:42:32	1192.2	884.4	180.2	246.7	207.5	173.3	458.0	708.7	178.0	170.9	154.2	182.4	62.1	62.8	62.6	62.4	230.20	30.35	6986.57
2006/11/14	17:43:32	1192.5	887.7	180.4	248.4	207.7	173.5	458.1	675.3	178.0	171.1	154.2	182.5	62.2	62.8	63.0	63.2	230.10	30.35	6983.54
2006/11/14	17:44:32	1192.1	886.1	180.5	247.9	208.5	173.8	460.0	648.1	178.3	171.3	154.3	182.5	62.6	62.4	63.0	62.8	230.10	30.36	6985.84
2006/11/14	17:45:32	1193.1	882.7	180.5	248.9	208.2	173.8	458.8	671.6	177.8	171.3	154.3	182.5	63.5	62.6	62.8	61.9	230.30	30.37	6994.21
2006/11/14	17:46:32	1192.9	886.0	180.5	247.7	207.9	173.6	457.8	671.9	178.2	171.3	154.5	182.5	62.4	61.9	63.3	62.6	230.00	30.35	6980.50
2006/11/14	17:47:32	1192.9	883.6	180.7	247.9	208.8	173.5	459.3	693.1	178.0	171.0	154.5	182.7	62.1	62.0	62.8	62.2	230.10	30.36	6988.14
2006/11/14	17:48:32	1193.3	885.4	180.7	249.2	208.3	174.0	460.5	655.3	178.5	171.5	154.5	182.7	62.3	62.6	63.2	62.6	229.80	30.33	6969.83
2006/11/14	17:49:32	1192.7	880.5	180.7	249.4	208.7	174.1	458.2	684.3	177.8	171.5	154.4	182.7	62.6	62.4	63.0	62.6	230.20	30.36	6991.18
2006/11/14	17:50:32	1192.9	882.2	180.9	247.9	208.4	174.3	458.3	668.2	178.2	171.5	154.8	182.9	62.6	62.8	63.3	62.4	230.10	30.36	6985.84
2006/11/14	17:51:32	1192.1	890.5	181.0	247.9	208.4	174.1	459.5	662.2	178.5	171.8	154.9	182.9	62.6	62.8	62.6	62.8	230.20	30.36	6988.87
2006/11/14	17:52:32	1192.9	886.0	181.2	247.8	208.8	174.3	459.5	682.7	178.8	171.8	154.9	183.0	62.6	63.0	63.2	62.8	230.10	30.36	6988.14
2006/11/14	17:53:32	1193.2	884.1	181.2	248.9	207.7	174.3	459.8	665.1	178.7	171.6	155.0	183.0	61.9	62.2	62.8	62.3	230.20	30.36	6988.87
2006/11/14	17:54:32	1192.2	886.0	181.2	247.8	208.4	174.5	457.0	660.0	178.5	171.8	155.1	183.0	62.6	62.4	62.1	61.5	230.20	30.36	6988.87
2006/11/14	17:55:32	1193.6	889.1	181.4	247.9	208.5	174.6	457.5	657.7	178.5	171.6	155.3	183.0	62.3	62.2	63.0	62.1	230.00	30.36	6982.80
2006/11/14	17:56:32	1191.9	886.7	181.4	247.2	209.3	174.6	459.4	674.3	178.7	171.8	155.3	183.0	62.0	62.4	63.0	62.2	230.20	30.38	6993.48
2006/11/14	17:57:32	1193.4	883.9	181.5	247.2	208.5	174.5	459.5	663.1	178.7	172.1	155.3	183.0	62.6	61.6	63.2	62.3	230.10	30.34	6981.23
2006/11/14	17:58:32	1194.6	883.3	181.5	247.1	209.1	175.0	457.9	707.3	179.2	172.1	155.3	183.2	62.8	62.3	62.4	62.6	230.20	30.38	6993.48
2006/11/14	17:59:32	1194.6	882.5	181.7	247.9	209.2	174.6	458.5	751.5	179.0	172.5	155.4	183.2	62.3	61.9	62.8	62.8	230.10	30.32	6976.63
2006/11/14	18:00:32	1193.6	885.3	181.9	249.2	207.8	174.6	459.9	744.5	179.0	172.0	155.4	183.2	62.0	62.8	62.2	62.6	230.30	30.37	6994.21
2006/11/14	18:01:32	1194.3	884.4	181.9	248.6	208.6	174.8	459.5	725.8	178.7	172.0	155.5	183.2	62.6	62.4	62.8	62.3	230.10	30.37	6988.14
2006/11/14	18:02:32	1194.8	883.8	182.0	247.0	209.3	174.8	457.8	721.5	179.0	172.3	155.5	183.4	61.8	62.4	63.0	62.3	230.00	30.34	6978.20
2006/11/14	18:03:32	1193.8	882.4	181.9	248.4	208.2	175.0	459.9	693.8	178.8	172.1	155.6	183.5	62.8	61.9	62.4	62.3	230.10	30.35	6983.54
2006/11/14	18:04:32	1193.6	885.4	182.0	248.4	208.8	174.8	460.2	698.9	179.0	172.5	155.8	183.5	61.5	61.3	62.6	61.8	230.00	30.35	6980.50
2006/11/14	18:05:32	1194.1	883.6	182.2	248.6	209.2	175.3	459.5	710.3	179.0	172.0	155.8	183.7	62.4	61.8	62.8	61.8	230.10	30.36	6985.84
2006/11/14	18:06:32	1193.7	885.4	182.2	248.9	209.1	175.5	461.0	703.8	179.2	172.5	155.8	183.5	63.3	62.0	62.4	62.2	230.10	30.36	6985.84
2006/11/14	18:07:32	1193.4	886.2	182.2	248.3	208.9	175.5	458.9	674.9	179.2	172.3	155.8	183.5	62.6	61.8	63.3	62.4	230.20	30.36	6988.87
2006/11/14	18:08:32	1193.1	885.6	182.4	247.5	208.6	174.8	457.6	704.7	179.0	171.8	155.8	183.7	62.1	61.7	62.8	61.7	230.20	30.36	6988.87
2006/11/14	18:09:32	1194.2	884.6	182.5	248.4	209.2	175.8	459.8	697.0	179.5	172.8	155.8	183.7	62.6	62.0	62.8	62.8	230.20	30.36	6988.87
2006/11/14	18:10:32	1192.8	886.2	182.7	248.1	208.9	175.5	459.2	699.6	179.2	172.6	155.9	183.7	62.3	61.9	61.9	61.6	229.90	30.34	6975.17
2006/11/14	18:11:32	1192.9	888.9	182.5	248.6	208.9	175.5	461.0	715.3	179.5	172.5	155.9	183.9	62.6	62.4	62.6	62.6	230.20	30.36	6988.87
2006/11/14	18:12:32	1194.9	883.7	182.7	250.8	209.1	175.3	460.3	697.2	178.8	172.5	156.1	184.0	61.6	61.8	63.2	61.6	230.10	30.35	6983.54
2006/11/14	18:13:32	1194.4	889.1	182.7	248.4	209.3	175.8	458.7	688.9	180.2	173.0	156.1	184.0	62.2	63.3	63.3	62.6	230.20	30.35	6986.57
2006/11/14	18:14:32	1193.7	887.6	183.0	249.2	209.3	175.7	460.5	699.8	180.0	173.3	156.1	184.0	62.0	62.4	62.3	62.8	230.20	30.35	6986.57
2006/11/14	18:15:32	1194.3	887.5	183.0	248.1	209.7	175.8	459.8	701.7	180.2	173.3	156.1	184.2	62.8	63.1	62.8	63.1	230.20	30.36	6988.87
2006/11/14	18:16:32	1193.8	886.4	183.0	249.4	209.6	175.8	458.9	696.1	179.7	173.3	156.3	184.2	63.0	62.6	63.1	62.3	230.20	30.37	6991.18
2006/11/14	18:17:32	1194.2	889.6	183.2	248.7	209.0	175.8	460.6	694.6	179.5	173.1	156.5	184.2	63.1	62.2	63.1	62.4	230.20	30.36	6988.87
2006/11/14	18:18:32	1194.1	885.6	183.2	247.9	209.7	175.8	459.5	711.5	180.2	173.3	156.3	184.2	62.8	62.8	62.8	62.4	230.20	30.36	6988.87
2006/11/14	18:19:32	1193.9	886.2	183.4	250.0	209.5	175.5	459.5	717.8	180.0	173.3	156.5	184.2	63.3	63.2	62.8	62.8	230.10	30.35	6983.54
2006/11/14	18:20:32	1193.9	884.8	183.4	248.9	209.3	175.7	461.1	693.8	180.2	173.6	156.5	184.4	62.6	63.1	62.4	62.4	230.00	30.35	6980.50
2006/11/14	18:21:32	1195.9	887.7	183.2	247.8	208.2	176.0	461.1	682.8	180.4	173.6	156.5	184.2	62.6	63.3	62.8	62.8	230.10	30.35	6983.54
2006/11/14	18:22:32	1194.9	887.9	183.2	248.4	208.8	175.7	461.6	708.3	180.2	173.5	156.5	184.2	62.8	62.1	62.6	62.8	230.10	30.35	6983.54
2006/11/14	18:23:32	1194.1	887.0	183.4	250.4	208.9	175.5	460.3	694.3	179.7	173.0	156.5	184.2	62.4	61.9	63.1	61.4	230.20	30.37	6991.18
2006/11/14	18:24:32	1193.9	880.7	183.5	249.1	209.5	176.0	459.5	718.0	179.9	173.3	156.6	184.2	62.8	62.4	62.6	62.2	229.40	30.13	6911.82
2006/11/14	18:25:32	1195.6	883.7	183.4	248.3	210.0	176.0	459.4	711.3	180.2	173.0	156.5	184.2	62.6	62.2	63.1	62.3	230.00	30.34	6980.50
2006/11/14	18:26:32	1193.1	887.2	183.7	248.7	210.0	176.0	462.6	723.6	180.7	173.3	156.5	184.2	62.0	62.8	63.0	62.8	230.20	30.36	6988.87

Heat Rise Test
1st Run

Date	Time	TC1	TC2	TC3	TC4	TC5	TC6	TC7	TC8	TC9	TC10	TC11	TC12	TC13	TC14	TC15	TC16	VDC	Amps	Watts
2006/11/14	18:27:32	1194.5	889.8	183.5	249.6	209.2	176.0	462.2	694.2	180.2	173.3	156.6	184.2	62.2	62.0	62.6	62.4	230.20	30.36	6991.18
2006/11/14	18:28:32	1194.5	894.1	183.5	248.3	209.4	175.8	462.4	698.0	180.0	173.5	156.8	184.2	62.6	62.3	63.0	62.6	230.20	30.36	6988.87
2006/11/14	18:29:32	1194.2	888.4	183.5	248.9	208.7	175.8	457.9	699.7	180.0	173.5	156.8	184.5	61.9	62.3	62.6	61.8	230.00	30.36	6985.10
2006/11/14	18:30:32	1195.3	889.2	183.7	249.4	209.6	176.2	461.3	733.5	180.0	173.5	156.8	184.5	63.2	63.0	62.8	61.5	230.30	30.36	6991.91
2006/11/14	18:31:32	1195.1	888.6	183.9	248.4	210.1	175.8	459.8	727.1	180.5	173.8	156.8	184.5	62.3	62.8	63.0	62.6	230.00	30.34	6978.20
2006/11/14	18:32:32	1194.9	883.9	183.7	247.9	210.1	176.3	463.1	708.0	180.0	173.6	156.8	184.5	62.6	63.3	62.8	61.9	230.20	30.36	6988.87
2006/11/14	18:33:32	1195.4	888.9	183.7	248.4	210.0	176.3	459.5	732.0	180.4	173.5	156.8	184.5	62.6	62.2	62.8	62.2	230.10	30.37	6988.14
2006/11/14	18:34:32	1194.9	888.3	183.9	250.0	208.0	176.5	461.7	721.0	179.9	173.5	157.0	184.5	62.2	61.8	62.6	61.3	230.00	30.32	6973.60
2006/11/14	18:35:32	1194.5	888.6	184.0	248.7	209.2	176.3	461.5	703.3	180.0	173.5	157.0	184.5	62.1	60.9	62.4	60.6	230.20	30.35	6986.57
2006/11/14	18:36:32	1194.8	886.2	184.0	248.4	208.8	176.3	462.5	737.6	179.5	173.5	157.0	184.7	63.1	61.2	62.2	60.6	230.30	30.37	6994.21
2006/11/14	18:37:32	1195.0	889.7	184.0	249.7	208.7	176.0	461.9	731.8	179.7	173.3	157.0	184.7	62.0	60.9	62.2	60.8	230.40	30.36	6994.94
2006/11/14	18:38:32	1194.6	886.5	184.0	248.1	208.5	176.3	462.2	715.8	180.0	173.5	157.1	184.7	62.6	60.4	62.6	61.4	230.20	30.36	6988.87
2006/11/14	18:39:32	1196.1	886.8	184.2	250.7	208.9	176.0	462.1	763.6	180.5	173.3	157.1	184.9	62.1	60.2	63.1	61.5	230.20	30.37	6991.18
2006/11/14	18:40:32	1195.7	888.0	184.2	249.6	208.9	176.3	459.9	710.3	180.5	173.5	157.3	184.9	62.8	60.6	62.8	61.7	230.20	30.34	6984.27
2006/11/14	18:41:32	1194.8	885.9	184.2	249.6	209.0	176.7	460.5	733.5	180.4	173.3	157.0	184.9	62.2	60.9	62.1	61.3	230.10	30.37	6988.14
2006/11/14	18:42:32	1195.9	888.9	184.2	248.6	210.1	176.3	460.3	742.4	180.2	173.3	157.3	184.9	62.6	60.0	62.3	61.2	230.10	30.35	6983.54
2006/11/14	18:43:32	1195.1	888.9	184.4	248.4	210.0	176.2	461.6	716.5	180.4	173.3	157.3	185.0	62.2	60.8	62.2	61.5	230.20	30.36	6988.87
2006/11/14	18:44:32	1194.8	885.1	184.5	248.4	209.1	176.5	458.8	773.8	180.5	173.6	157.3	185.0	62.2	61.3	62.6	61.0	230.30	30.33	6985.00
2006/11/14	18:45:32	1195.5	889.9	184.7	247.9	209.7	176.5	463.2	760.6	180.2	173.5	157.5	185.0	62.1	60.4	62.2	61.0	230.20	30.36	6991.18
2006/11/14	18:46:32	1195.7	893.0	184.5	248.7	208.8	177.3	462.6	733.6	180.7	173.8	157.5	185.2	62.0	61.3	62.6	61.5	230.10	30.36	6985.84
2006/11/14	18:47:32	1195.9	888.3	184.7	249.9	209.3	177.0	460.2	764.5	179.9	173.5	157.5	185.2	62.3	61.1	62.6	60.9	230.20	30.36	6988.87
2006/11/14	18:48:32	1195.4	888.4	185.0	250.9	209.3	176.8	463.2	736.8	180.0	173.6	157.5	185.2	63.4	61.5	62.2	60.4	230.20	30.33	6981.97
2006/11/14	18:49:32	1194.6	885.9	184.5	249.1	209.2	177.3	463.7	751.3	180.5	173.8	157.5	185.2	62.6	60.6	61.9	61.1	230.20	30.36	6988.87
2006/11/14	18:50:32	1194.9	888.9	184.9	249.7	210.5	177.5	462.4	807.4	181.2	174.1	157.8	185.4	62.0	63.1	63.0	61.7	230.20	30.37	6991.18
2006/11/14	18:51:32	1194.9	890.6	185.0	251.0	209.8	177.3	461.0	764.8	181.2	174.5	157.8	185.2	62.2	62.8	62.4	61.7	230.20	30.37	6991.18
2006/11/14	18:52:32	1196.0	889.9	184.9	249.7	211.0	177.5	461.7	758.1	181.2	174.1	157.8	185.2	63.1	61.7	62.6	62.4	230.10	30.36	6985.84
2006/11/14	18:53:32	1197.4	884.6	185.2	248.6	210.3	177.7	461.3	801.6	181.5	174.3	157.6	185.4	63.1	62.6	63.3	62.4	230.20	30.36	6988.87
2006/11/14	18:54:32	1196.1	888.9	185.2	248.4	210.6	177.5	461.8	773.7	180.9	174.3	158.0	185.5	62.8	61.6	63.1	61.2	229.90	30.31	6968.27
2006/11/14	18:55:32	1195.5	884.5	185.5	248.7	209.1	177.3	463.2	768.7	180.5	174.5	158.0	185.5	62.3	61.6	62.4	61.0	230.20	30.36	6988.87
2006/11/14	18:56:32	1197.6	887.8	185.4	248.1	209.7	177.5	463.0	797.8	181.0	174.3	157.8	185.5	62.1	61.3	62.6	61.4	230.00	30.31	6971.30
2006/11/14	18:59:00	1195.6	883.0	185.5	249.2	209.3	177.3	461.1	783.0	180.7	174.1	158.0	185.7	62.3	60.6	62.1	61.2	230.00	30.34	6980.50
2006/11/14	19:00:00	1195.1	886.8	185.2	248.7	209.7	177.3	461.0	796.5	180.5	174.3	158.0	185.7	62.3	60.6	62.2	60.9	229.40	30.27	6943.94
2006/11/14	19:01:00	1195.2	885.6	185.5	249.4	209.5	177.5	459.9	785.9	181.2	174.5	158.2	185.7	62.3	62.1	62.6	61.8	229.90	30.31	6971.30
2006/11/14	19:02:00	1195.6	886.0	185.7	249.2	209.6	177.5	460.6	775.9	181.4	174.8	158.2	185.7	61.8	62.6	62.0	61.8	229.40	30.29	6948.53
2006/11/14	19:03:00	1196.0	884.2	185.7	247.9	210.0	177.5	459.2	785.0	181.5	174.8	158.3	185.9	62.1	62.0	62.6	62.1	229.90	30.32	6972.87
2006/11/14	19:04:00	1196.7	885.1	185.7	248.2	210.2	177.8	461.3	783.0	181.5	175.0	158.3	185.9	62.4	61.9	63.0	62.3	230.00	30.32	6975.90
2006/11/14	19:05:00	1195.7	888.9	185.7	247.4	210.3	177.8	459.9	772.6	181.7	175.0	158.3	185.9	62.4	62.1	62.6	62.6	229.90	30.30	6965.97
2006/11/14	19:06:00	1196.2	887.2	185.9	247.7	210.3	178.2	458.8	765.7	182.0	175.2	158.5	186.0	61.4	62.8	62.6	62.6	229.60	30.32	6963.77
2006/11/14	19:07:00	1195.6	887.4	186.0	248.9	209.9	178.0	461.0	774.3	182.2	175.3	158.5	186.0	61.8	62.8	62.2	62.6	230.00	30.32	6973.60
2006/11/14	19:08:00	1196.7	888.0	186.0	248.1	210.3	178.0	462.0	799.6	182.2	175.5	158.7	186.2	63.3	61.2	62.3	62.1	229.70	30.29	6957.61
2006/11/14	19:09:00	1196.1	887.9	186.0	248.4	210.1	178.0	461.8	778.7	181.7	175.3	158.8	186.2	62.6	60.6	62.8	61.4	229.70	30.31	6970.57
2006/11/14	19:10:00	1195.6	886.8	186.0	249.1	209.8	178.2	461.5	765.5	181.2	175.2	158.8	186.2	62.3	60.9	62.8	60.8	229.70	30.29	6960.64
2006/11/14	19:11:00	1196.2	888.6	186.0	247.7	210.0	177.7	461.6	765.9	181.5	175.2	158.8	186.2	62.1	60.0	62.1	60.9	229.50	30.27	6958.44
2006/11/14	19:12:00	1196.2	886.6	186.0	248.9	209.9	178.0	462.1	765.0	182.0	175.0	158.8	186.2	62.1	60.2	62.2	61.5	229.80	30.29	6965.97
2006/11/14	19:13:00	1195.9	885.4	186.2	248.2	209.7	177.8	461.6	777.9	182.0	175.3	158.8	186.2	62.1	60.1	62.6	61.4	229.30	30.29	6954.67
2006/11/14	19:14:00	1196.4	887.4	186.4	249.2	210.2	178.3	461.4	770.2	181.7	175.3	158.8	186.4	62.0	60.4	62.6	61.0	229.50	30.29	6951.56
2006/11/14	19:15:00	1196.1	890.9	186.5	250.2	209.8	178.5	461.5	781.7	182.0	175.3	159.0	186.4	62.0	60.6	62.6	60.9	229.90	30.27	6968.15
2006/11/14	19:16:00	1196.3	887.0	186.4	249.1	209.9	178.3	461.5	794.7	182.2	175.3	158.8	186.4	62.1	60.4	62.4	61.1	229.10	30.24	6927.98
2006/11/14	19:17:00	1196.3	886.9	186.5	248.9	210.1	178.7	462.5	768.7	182.0	175.3	159.0	186.5	62.3	60.4	62.6	61.1	229.90	30.30	6965.97
2006/11/14	19:18:00	1196.6	886.9	186.7	249.9	210.1	178.7	461.7	775.3	182.0	175.3	159.0	186.5	62.4	61.2	62.6	61.0	229.60	30.32	6968.36
2006/11/14	19:19:00	1196.6	889.6	186.7	249.7	209.8	178.7	462.5	787.2	182.0	175.7	159.2	186.5	62.3	61.2	62.6	60.8	228.80	30.20	6909.76
2006/11/14	19:20:00	1196.9	889.9	186.7	249.7	210.0	178.8	462.7	772.3	182.4	175.8	159.3	186.7	62.0	61.1	62.1	60.9	229.90	30.33	6972.87
2006/11/14	19:21:00	1195.9	889.4	186.7	249.2	209.6	178.7	460.8	813.5	182.4	175.7	159.3	186.7	61.6	60.9	61.0	61.2	229.00	30.35	6961.60
2006/11/14	19:22:00	1195.9	887.8	186.7	250.2	211.1	179.2	461.5	803.6	183.0	176.0	159.3	186.7	62.6	61.8	61.8	62.0	230.00	30.34	6980.50
2006/11/14	19:23:00	1195.9	886.9	186.9	249.1	211.2	179.2	462.7	795.5	183.0	176.0	159.3	186.7	62.8	62.0	62.2	62.0	229.90	30.32	6975.17
2006/11/14	19:24:00	1196.2	885.9	186.7	249.6	210.2	179.2	462.3	798.4	182.9	176.0	159.5	186.7	62.8	61.8	62.4	61.9	229.90	30.31	6970.57

Heat Rise Test
1st Run

Date	Time	TC1	TC2	TC3	TC4	TC5	TC6	TC7	TC8	TC9	TC10	TC11	TC12	TC13	TC14	TC15	TC16	VDC	Amps	Watts
2006/11/14	19:25:00	1196.2	887.8	187.0	249.6	211.0	179.2	461.1	804.7	183.0	176.0	159.5	186.9	63.2	62.2	62.3	62.0	229.90	30.34	6975.17
2006/11/14	19:26:00	1196.3	889.5	187.0	249.9	210.3	179.0	461.9	840.9	183.2	176.3	159.5	186.9	62.0	62.4	62.6	62.0	229.90	30.33	6972.87
2006/11/14	19:27:00	1196.6	887.9	187.0	249.6	210.9	179.2	463.0	797.0	183.2	176.3	159.5	186.9	61.7	62.0	62.8	62.0	229.80	30.32	6970.57
2006/11/14	19:28:00	1197.0	888.1	187.2	250.2	211.4	179.2	462.1	782.8	183.5	176.5	159.7	187.0	61.7	62.0	62.1	62.2	229.90	30.34	6979.76
2006/11/14	19:29:00	1196.3	887.4	187.2	249.9	210.6	179.2	463.1	775.3	183.5	176.5	159.8	187.0	62.3	62.1	62.0	62.2	229.90	30.34	6977.47
2006/11/14	19:30:00	1196.3	886.8	187.4	250.5	211.8	179.2	463.7	789.3	183.5	176.5	159.9	187.0	61.9	62.3	62.6	62.4	229.50	30.16	6921.72
2006/11/14	19:31:00	1196.9	886.8	187.4	249.6	210.2	179.5	461.7	783.0	183.2	177.0	159.9	187.2	62.2	61.7	62.0	61.5	229.50	30.31	6958.44
2006/11/14	19:32:00	1196.4	888.9	187.4	250.9	211.0	179.5	463.5	756.0	183.2	176.8	160.0	187.2	62.0	61.7	62.6	61.3	229.00	30.24	6924.96
2006/11/14	19:33:00	1196.6	887.3	187.5	249.9	211.2	179.5	463.0	820.4	183.5	177.0	160.0	187.2	62.4	62.1	62.1	62.3	227.70	30.26	6890.20
2006/11/14	19:34:00	1196.6	888.6	187.4	249.9	210.6	179.7	463.7	819.8	182.9	176.8	160.0	187.2	61.2	62.1	62.8	61.7	229.90	30.30	6965.97
2006/11/14	19:35:00	1197.4	888.6	187.5	250.5	210.0	179.7	463.3	807.0	183.5	177.0	160.0	187.4	61.8	60.9	62.1	62.1	229.70	30.21	6945.28
2006/11/14	19:36:00	1197.2	889.1	187.5	249.7	210.6	179.5	463.8	797.8	183.5	177.0	160.2	187.4	62.6	61.2	61.9	62.0	229.80	30.30	6969.83
2006/11/14	19:37:00	1196.9	888.9	187.7	249.4	211.5	179.9	463.3	831.2	183.7	177.2	160.4	187.4	62.3	62.0	62.1	61.9	229.90	30.32	6972.87
2006/11/14	19:38:00	1197.7	888.9	187.7	249.7	210.9	179.7	463.0	809.5	183.7	177.0	160.4	187.5	62.6	62.2	62.2	61.8	230.00	30.32	6973.60
2006/11/14	19:39:00	1197.6	886.8	187.7	250.0	211.4	180.0	462.0	822.9	184.2	177.0	160.4	187.5	62.8	62.2	62.6	62.4	230.20	30.35	6986.57
2006/11/14	19:40:00	1197.4	889.9	187.9	250.2	211.8	180.0	463.5	832.8	184.0	177.5	160.5	187.5	62.6	62.2	62.6	61.6	230.10	30.35	6983.54
2006/11/14	19:41:00	1196.7	888.6	187.9	250.5	211.7	180.2	463.7	811.7	184.2	177.3	160.5	187.5	62.6	62.6	62.2	61.7	229.90	30.34	6975.17
2006/11/14	19:42:00	1197.3	885.9	187.9	250.4	211.0	180.0	464.3	819.8	184.2	177.5	160.5	187.7	62.8	62.4	62.2	61.7	230.10	30.35	6983.54
2006/11/14	19:43:00	1197.0	888.7	188.0	250.7	211.3	180.2	463.8	820.9	183.9	177.5	160.7	187.7	62.4	62.0	62.4	61.4	230.10	30.31	6974.33
2006/11/14	19:44:00	1197.1	887.6	188.0	249.7	211.2	180.5	464.5	828.0	183.7	177.3	160.5	187.7	63.0	61.5	62.3	61.2	230.10	30.35	6983.54
2006/11/14	19:45:00	1197.4	890.7	188.0	249.7	211.0	180.4	464.0	827.5	184.4	177.5	160.7	187.7	62.2	62.3	62.6	62.6	230.10	30.35	6983.54
2006/11/14	19:46:00	1197.4	889.5	188.2	250.5	211.2	180.4	463.7	837.6	184.0	177.5	160.9	187.9	62.2	61.8	62.6	61.8	230.10	30.34	6981.23
2006/11/14	19:47:00	1197.7	890.9	188.2	250.4	211.4	180.7	464.3	831.0	184.0	177.7	161.0	187.9	61.4	61.1	62.6	61.1	230.00	30.35	6980.50
2006/11/14	19:48:00	1197.7	888.9	188.5	250.8	210.5	180.5	464.3	826.2	184.5	177.8	160.9	188.0	61.5	61.5	62.3	60.9	229.90	30.32	6973.60
2006/11/14	19:49:00	1197.0	886.6	188.5	250.7	211.8	180.5	463.4	859.3	184.5	178.0	161.0	188.0	61.3	62.2	62.6	62.0	229.90	30.32	6973.60
2006/11/14	19:50:00	1197.3	888.6	188.5	250.7	211.5	180.5	464.5	850.2	184.9	178.0	161.0	188.0	61.8	62.4	62.2	61.8	229.90	30.32	6972.87
2006/11/14	19:51:00	1197.7	890.1	188.5	249.7	211.0	180.7	465.3	870.7	184.7	178.0	161.0	188.0	62.6	61.2	62.2	61.9	227.80	30.20	6879.56
2006/11/14	19:52:00	1197.1	889.8	188.5	251.6	210.9	180.5	465.6	844.5	183.7	177.8	161.2	188.0	62.6	60.8	62.3	60.6	229.00	30.20	6932.57
2006/11/14	19:53:00	1197.4	886.6	188.5	249.9	210.1	180.0	464.3	865.8	184.0	177.8	161.0	188.2	61.3	60.8	61.8	60.6	230.00	30.32	6973.60
2006/11/14	19:54:00	1197.6	891.0	188.7	251.0	210.5	180.2	464.3	870.4	184.0	178.0	161.3	188.2	61.3	60.4	61.7	60.6	230.00	30.32	6975.90
2006/11/14	19:55:00	1198.4	891.1	188.7	251.2	211.2	180.5	466.1	893.8	183.7	177.8	161.2	188.2	62.1	60.6	62.2	60.4	229.20	30.21	6924.13
2006/11/14	19:56:00	1197.8	889.5	188.5	250.7	211.5	180.7	465.6	862.8	183.9	177.7	161.2	188.2	62.3	62.1	61.8	60.2	229.90	30.31	6968.27
2006/11/14	19:57:00	1197.6	890.6	188.7	250.7	210.5	181.0	465.5	854.4	184.4	177.8	161.2	188.2	62.8	61.2	62.1	60.6	229.80	30.32	6967.54
2006/11/14	19:58:00	1199.4	887.2	188.7	248.9	211.1	180.7	465.0	879.7	184.0	177.8	161.2	188.2	62.0	60.8	62.0	60.6	230.00	30.32	6978.20
2006/11/14	19:59:00	1197.6	892.4	188.7	251.2	211.7	181.0	465.8	861.7	184.2	177.8	161.4	188.2	62.8	61.0	61.8	60.9	229.90	30.32	6973.60
2006/11/14	20:00:00	1197.8	889.4	188.9	250.8	211.8	181.0	465.8	880.0	185.0	177.8	161.3	188.4	62.1	61.8	62.6	61.2	229.90	30.33	6975.90
2006/11/14	20:01:00	1198.4	890.1	189.0	249.9	212.7	180.9	464.5	890.0	185.2	178.3	161.5	188.5	62.0	61.9	62.6	61.8	230.00	30.33	6981.97
2006/11/14	20:02:00	1198.6	889.1	189.0	250.2	212.2	181.2	465.3	888.6	185.4	178.7	161.5	188.5	62.0	61.9	62.8	62.0	230.10	30.34	6981.23
2006/11/14	20:03:00	1198.7	889.7	189.0	250.9	212.3	181.0	464.6	877.7	185.2	178.5	161.5	188.5	62.2	61.9	62.2	62.0	230.10	30.35	6983.54
2006/11/14	20:04:00	1198.7	890.2	189.0	251.4	211.5	181.2	465.8	886.8	185.2	178.5	161.7	188.5	62.4	61.8	62.3	61.8	230.10	30.35	6983.54
2006/11/14	20:05:00	1197.8	889.1	189.2	250.9	211.8	181.2	465.9	902.4	184.7	178.5	161.7	188.7	62.6	60.6	62.6	61.1	230.20	30.35	6986.57
2006/11/14	20:06:00	1197.9	890.5	189.2	251.5	211.6	181.5	464.5	887.3	185.2	178.5	161.8	188.7	62.4	61.5	62.4	61.4	230.10	30.35	6983.54
2006/11/14	20:07:00	1198.4	890.9	189.4	251.2	211.9	180.9	465.5	928.1	184.7	178.3	161.9	188.7	62.4	61.2	62.3	60.8	230.10	30.35	6983.54
2006/11/14	20:08:00	1198.1	892.1	189.4	249.9	210.9	181.4	465.0	886.2	185.0	178.3	161.8	188.9	62.3	61.6	61.7	60.8	230.10	30.35	6985.84
2006/11/14	20:09:00	1197.9	891.6	189.5	251.0	212.4	181.9	465.6	908.2	185.0	178.5	162.0	188.9	62.6	61.6	62.6	60.9	230.10	30.35	6983.54
2006/11/14	20:10:00	1198.1	888.7	189.5	250.7	211.8	181.0	465.3	895.6	184.5	178.2	162.1	189.0	62.6	61.4	62.3	60.2	230.10	30.34	6981.23
2006/11/14	20:11:00	1198.1	884.9	189.5	251.6	211.2	181.0	465.4	920.0	184.9	178.0	161.9	189.0	62.0	60.9	62.2	60.1	230.10	30.35	6983.54
2006/11/14	20:12:00	1198.4	888.4	189.7	250.2	211.9	181.5	464.9	918.7	185.0	178.7	162.1	189.0	62.3	61.8	62.1	60.4	230.10	30.34	6981.23
2006/11/14	20:13:00	1198.0	891.1	189.7	251.3	211.4	181.7	466.4	895.9	185.0	178.8	162.2	189.0	62.3	60.6	62.2	60.8	230.10	30.35	6983.54
2006/11/14	20:14:00	1197.4	891.6	189.7	250.9	210.8	182.0	465.5	908.2	185.2	178.7	162.2	189.0	62.0	60.8	62.3	60.6	230.10	30.35	6983.54
2006/11/14	20:15:00	1198.5	892.9	189.7	251.2	211.4	181.9	467.4	916.4	184.7	178.7	162.4	189.0	61.8	60.4	62.3	60.6	230.10	30.35	6983.54
2006/11/14	20:16:00	1198.7	891.9	190.0	251.2	211.6	181.7	466.6	927.8	185.2	178.7	162.3	189.2	61.9	60.4	62.1	60.4	230.10	30.35	6983.54
2006/11/14	20:17:00	1198.3	887.6	190.0	251.4	211.9	181.9	467.2	908.4	185.0	178.7	162.4	189.2	62.1	60.0	62.1	60.4	230.10	30.35	6983.54
2006/11/14	20:18:00	1198.4	885.9	190.0	251.5	212.3	181.7	466.9	923.8	185.4	179.0	162.3	189.2	62.1	60.1	62.4	60.9	230.10	30.35	6983.54
2006/11/14	20:19:00	1198.1	887.8	190.2	251.4	212.3	182.0	466.5	923.8	185.7	179.0	162.5	189.4	62.1	59.9	62.6	60.8	230.10	30.35	6985.84
2006/11/14	20:20:00	1199.6	889.9	190.2	251.2	212.4	181.9	467.7	920.9	185.7	178.8	162.5	189.4	62.2	59.9	62.2	60.8	230.10	30.35	6983.54

Heat Rise Test
1st Run

Date	Time	TC1	TC2	TC3	TC4	TC5	TC6	TC7	TC8	TC9	TC10	TC11	TC12	TC13	TC14	TC15	TC16	VDC	Amps	Watts
2006/11/14	20:21:00	1199.1	890.8	190.2	252.3	212.2	182.2	467.7	923.6	185.5	179.0	162.5	189.4	62.1	59.8	62.4	60.6	230.20	30.35	6986.57
2006/11/14	20:22:00	1198.4	891.9	190.2	251.6	211.8	182.2	467.3	930.0	185.5	179.0	162.6	189.4	62.0	59.8	62.6	60.6	230.10	30.35	6985.84
2006/11/14	20:23:00	1199.1	890.8	190.5	251.2	212.4	182.0	468.0	930.9	185.7	179.0	162.6	189.4	61.9	60.1	62.3	60.8	230.10	30.35	6983.54
2006/11/14	20:24:00	1199.1	892.2	190.5	251.6	212.3	182.2	467.8	943.7	185.9	179.0	162.7	189.5	62.1	59.7	62.3	60.9	230.10	30.35	6983.54
2006/11/14	20:25:00	1199.9	889.1	190.5	251.3	212.7	182.0	467.8	955.7	185.7	179.2	162.7	189.5	62.2	60.0	62.3	61.1	230.10	30.35	6983.54
2006/11/14	20:26:00	1199.9	887.4	190.4	250.4	212.2	182.0	467.0	958.3	185.7	179.2	162.7	189.5	62.2	60.1	62.4	60.6	230.10	30.35	6983.54
2006/11/14	20:27:00	1198.6	888.0	190.7	250.4	212.8	182.5	467.4	942.7	185.7	179.2	163.0	189.7	61.9	60.4	62.1	60.4	230.10	30.35	6985.84
2006/11/14	20:28:00	1198.6	889.6	190.7	252.3	213.1	182.7	465.0	919.9	186.0	179.2	163.0	189.7	61.9	60.8	62.1	60.2	230.10	30.35	6983.54
2006/11/14	20:29:00	1199.5	892.6	190.7	251.2	213.1	183.0	465.9	958.3	186.5	179.7	163.0	189.7	62.1	61.4	61.8	61.0	230.10	30.35	6983.54
2006/11/14	20:30:00	1199.4	891.6	190.9	251.4	212.9	183.2	468.5	961.9	186.7	179.7	163.0	189.9	62.2	61.5	62.3	61.3	230.10	30.35	6985.84
2006/11/14	20:31:00	1199.9	891.0	191.0	252.0	212.8	183.0	468.3	930.8	186.5	179.7	163.0	189.9	62.6	61.5	62.0	61.0	230.10	30.35	6983.54
2006/11/14	20:32:00	1199.6	891.4	191.0	251.2	213.5	183.2	466.4	933.7	187.0	180.0	163.1	189.9	62.4	61.8	62.3	61.4	230.10	30.35	6985.84
2006/11/14	20:33:00	1199.8	892.6	191.0	251.7	213.2	183.2	468.1	928.6	187.0	180.2	163.2	190.0	63.2	61.6	62.6	61.9	230.10	30.35	6985.84
2006/11/14	20:34:00	1199.0	894.8	191.0	252.5	213.2	183.2	466.4	916.9	186.9	180.2	163.3	190.0	62.6	61.8	62.0	61.8	230.10	30.35	6983.54
2006/11/14	20:35:00	1199.4	890.9	191.0	251.6	213.0	183.2	468.0	938.6	187.0	180.2	163.3	190.0	62.6	61.5	62.1	61.5	230.10	30.35	6983.54
2006/11/14	20:36:00	1199.2	892.4	191.2	252.5	213.7	183.5	466.6	927.6	187.2	180.2	163.3	190.0	62.8	61.6	62.8	61.5	230.10	30.35	6985.84
2006/11/14	20:37:00	1198.7	890.6	191.2	251.8	213.4	183.2	467.2	920.1	186.4	180.2	163.5	190.0	62.1	60.6	62.8	61.1	230.10	30.34	6981.23
2006/11/14	20:38:00	1199.4	890.6	191.2	251.9	212.5	183.2	467.7	951.6	186.2	179.9	163.6	190.0	61.9	60.4	62.2	60.4	230.00	30.34	6978.20
2006/11/14	20:39:00	1199.9	889.7	191.4	252.6	213.2	183.5	468.3	940.7	187.0	180.0	163.6	190.2	62.1	60.6	62.3	60.4	230.10	30.35	6983.54
2006/11/14	20:40:00	1199.6	893.3	191.4	251.9	213.2	183.2	467.7	953.4	186.0	180.0	163.6	190.2	61.9	60.6	62.0	60.1	230.00	30.35	6980.50
2006/11/14	20:41:00	1200.4	891.6	191.2	252.0	212.9	183.0	469.4	957.6	186.4	180.0	163.6	190.2	61.8	60.4	61.8	59.9	230.10	30.34	6981.23
2006/11/14	20:42:00	1200.4	892.9	191.5	252.2	212.7	183.0	468.3	967.1	186.7	180.2	163.6	190.2	61.6	61.1	61.8	60.4	230.10	30.35	6983.54
2006/11/14	20:43:00	1200.7	893.4	191.5	252.0	213.4	183.5	468.9	960.4	187.0	180.2	163.6	190.2	61.9	61.0	61.8	60.8	230.10	30.33	6981.97
2006/11/14	20:44:00	1200.1	890.9	191.7	252.3	213.2	183.7	469.3	966.0	187.0	180.7	163.8	190.2	62.2	60.0	62.6	61.0	230.10	30.32	6976.63
2006/11/14	20:45:00	1199.9	889.1	191.7	252.3	211.8	183.7	469.1	998.0	187.0	180.5	163.8	190.4	61.1	60.4	61.2	60.8	230.10	30.34	6981.23
2006/11/14	20:46:00	1200.9	892.4	191.7	251.8	212.1	183.5	469.2	991.8	187.0	180.5	163.8	190.4	61.8	61.4	61.3	60.9	230.10	30.35	6983.54
2006/11/14	20:47:00	1200.9	893.5	191.7	252.7	213.2	184.0	468.8	983.3	187.7	180.7	163.8	190.5	63.3	62.1	61.7	61.1	229.80	30.30	6965.97
2006/11/14	20:48:00	1200.1	894.5	191.9	251.9	212.8	184.0	469.6	999.6	187.5	180.9	164.0	190.5	63.2	61.8	62.4	61.9	230.00	30.33	6975.90
2006/11/14	20:49:00	1200.7	894.6	192.0	251.4	212.9	184.2	469.8	990.6	187.4	180.7	164.1	190.5	62.6	61.0	62.3	61.2	229.80	30.30	6962.94
2006/11/14	20:50:00	1200.8	893.7	192.0	251.6	213.2	183.5	469.3	1000.5	187.0	180.7	164.1	190.5	62.6	60.9	62.4	60.6	229.70	30.30	6959.91
2006/11/14	20:51:00	1200.8	893.5	192.0	252.6	213.1	184.2	468.8	1002.6	187.0	180.5	164.1	190.7	62.1	61.0	61.5	60.4	229.90	30.34	6975.17
2006/11/14	20:52:00	1199.8	891.1	192.0	251.9	213.0	184.0	469.2	995.8	187.2	180.7	164.1	190.7	61.7	60.8	61.6	60.6	229.50	30.28	6949.26
2006/11/14	20:53:00	1199.7	890.2	192.2	252.4	214.0	184.2	469.9	983.6	188.0	181.2	164.1	190.7	62.4	61.7	62.3	61.7	229.10	30.20	6918.82
2006/11/14	20:54:00	1199.7	895.4	192.2	252.1	213.7	184.4	470.1	969.6	187.9	180.9	164.3	190.7	62.2	61.5	62.4	61.7	229.70	30.29	6964.50
2006/11/14	20:55:00	1199.6	890.7	192.2	251.9	213.9	184.0	469.3	982.3	188.0	181.0	164.3	190.7	62.3	61.3	62.3	61.1	230.00	30.34	6978.20
2006/11/14	20:56:00	1200.2	890.1	192.2	252.2	213.2	184.2	470.0	968.8	188.4	181.4	164.3	190.9	61.7	62.0	62.2	61.3	229.60	30.30	6956.88
2006/11/14	20:57:00	1200.6	889.7	192.4	253.4	212.7	183.4	469.2	977.9	187.2	181.0	164.4	190.9	61.1	60.2	62.4	60.4	229.20	30.14	6911.10
2006/11/14	20:58:00	1200.4	890.0	192.4	252.3	213.2	183.5	470.2	966.3	187.4	181.0	164.4	191.0	61.1	59.8	62.0	60.4	228.90	30.22	6917.36
2006/11/14	20:59:00	1200.9	893.7	192.4	252.2	212.9	184.2	469.4	990.0	187.0	181.0	164.5	191.0	61.9	60.4	62.3	60.6	230.00	30.29	6978.82
2006/11/14	21:00:00	1201.5	894.8	192.5	252.8	213.2	184.2	470.4	986.1	187.7	181.0	164.6	191.0	61.8	60.8	62.3	60.6	229.70	30.17	6945.13
2006/11/14	21:01:00	1200.8	893.0	192.5	252.5	213.0	184.5	470.5	976.2	188.7	181.5	164.6	191.0	62.0	62.1	62.2	61.7	230.00	30.34	6978.20
2006/11/14	21:02:00	1200.1	893.1	192.5	253.6	213.9	184.5	469.1	977.0	188.5	181.7	164.6	191.0	62.2	61.4	61.7	61.9	229.90	30.31	6974.33
2006/11/14	21:03:00	1201.1	893.7	192.7	252.0	214.2	184.5	470.5	1014.8	188.5	181.7	164.7	191.2	61.9	61.7	61.8	61.8	230.00	30.29	6969.73
2006/11/14	21:04:00	1200.4	889.8	192.7	253.4	214.0	185.0	468.9	989.2	188.0	181.7	164.8	191.2	61.7	61.1	61.8	61.5	229.90	30.31	6974.33
2006/11/14	21:05:00	1200.2	891.8	192.9	253.4	213.2	184.9	470.7	1020.2	188.0	181.7	164.8	191.2	62.6	61.2	62.4	61.2	229.70	30.29	6957.61
2006/11/14	21:06:00	1200.4	892.9	192.7	253.7	214.5	185.0	468.0	1021.3	188.5	181.9	164.9	191.4	62.2	61.7	62.6	61.3	229.60	30.31	6966.06
2006/11/14	21:07:00	1200.5	892.2	193.0	252.6	214.5	185.0	470.0	1007.7	189.4	182.4	164.8	191.5	62.1	62.4	62.8	62.3	229.80	30.33	6972.13
2006/11/14	21:08:00	1201.4	891.9	193.2	252.5	214.7	185.2	469.0	1014.7	188.7	182.5	164.9	191.5	62.0	62.2	62.6	62.0	229.90	30.30	6970.57
2006/11/14	21:09:00	1201.5	893.9	193.2	254.1	213.9	185.0	471.0	1000.3	189.0	182.2	165.2	191.5	62.3	61.8	62.8	61.7	229.90	30.29	6963.67
2006/11/14	21:10:00	1201.1	893.9	193.2	253.0	214.2	184.9	471.3	987.5	188.9	182.4	165.3	191.7	62.3	61.5	61.9	61.8	229.90	30.32	6972.87
2006/11/14	21:11:00	1201.6	893.9	193.0	253.6	214.1	185.2	469.3	991.6	189.5	182.5	165.2	191.7	61.9	60.9	61.9	61.8	229.10	30.16	6909.66
2006/11/14	21:12:00	1201.6	891.9	193.2	252.8	214.0	185.2	469.7	1011.0	189.0	182.5	165.2	191.7	61.9	61.1	62.6	61.6	229.90	30.28	6961.37
2006/11/14	21:13:00	1200.9	894.3	193.4	253.9	214.7	185.2	471.5	990.8	189.9	182.9	165.3	191.7	62.2	61.9	63.0	62.2	228.90	30.20	6912.78
2006/11/14	21:14:00	1201.1	893.4	193.5	253.4	214.4	185.4	471.2	986.3	189.4	182.7	165.4	191.7	62.4	61.7	62.4	62.0	230.00	30.33	6978.20
2006/11/14	21:15:00	1202.5	894.5	193.5	253.6	214.1	185.4	470.5	1014.1	189.7	182.7	165.6	191.9	62.8	62.1	62.0	62.4	229.80	30.30	6962.94
2006/11/14	21:16:00	1201.8	890.9	193.7	253.4	215.2	185.5	469.8	1016.7	189.5	182.7	165.6	191.9	62.0	62.1	62.6	62.0	229.50	30.27	6946.97

Heat Rise Test
1st Run

Date	Time	TC1	TC2	TC3	TC4	TC5	TC6	TC7	TC8	TC9	TC10	TC11	TC12	TC13	TC14	TC15	TC16	VDC	Amps	Watts
2006/11/14	21:17:00	1201.1	895.4	193.7	253.8	214.9	185.7	469.5	999.1	189.4	182.7	165.7	191.9	62.3	61.5	62.8	61.3	229.60	30.29	6954.58
2006/11/14	21:18:00	1200.9	892.5	193.7	253.2	214.6	185.5	469.6	1010.1	189.4	182.7	165.8	191.9	62.6	61.6	63.0	61.1	229.60	30.25	6945.40
2006/11/14	21:19:00	1201.3	894.6	193.7	253.0	214.7	185.7	471.5	990.0	189.4	182.7	165.9	192.0	61.9	62.1	62.8	61.2	229.90	30.29	6969.73
2006/11/14	21:20:00	1201.9	893.8	193.9	253.0	214.6	185.2	469.6	954.1	189.5	182.7	165.8	192.0	61.8	62.1	62.3	61.7	229.60	30.27	6952.29
2006/11/14	21:21:00	1201.2	896.7	194.0	253.6	214.7	186.2	473.2	927.3	189.9	183.0	165.8	192.0	62.6	62.1	62.8	61.7	229.90	30.32	6973.60
2006/11/14	21:22:00	1200.6	894.9	194.0	253.8	214.7	186.0	472.0	916.0	189.2	182.7	165.9	192.0	62.4	60.6	62.3	60.6	229.70	30.27	6957.61
2006/11/14	21:23:00	1201.1	893.4	194.0	253.5	214.4	185.5	470.8	915.7	189.2	182.7	165.9	192.2	61.9	59.7	62.2	60.4	229.50	30.27	6946.97
2006/11/14	21:24:00	1201.3	893.4	194.0	253.4	214.0	185.5	471.3	887.2	189.0	182.5	166.0	192.2	62.1	60.0	62.4	60.4	229.80	30.26	6953.75
2006/11/14	21:25:00	1202.2	892.6	194.2	252.8	214.5	185.7	472.0	887.2	189.2	182.7	166.0	192.2	62.0	60.0	62.4	60.6	229.90	30.33	6975.17
2006/11/14	21:26:00	1201.9	893.9	194.0	253.3	214.2	185.7	470.8	900.1	188.9	182.5	166.0	192.2	62.3	60.4	62.6	60.4	229.50	30.26	6947.70
2006/11/14	21:27:00	1202.7	893.1	194.2	253.1	213.6	185.9	472.6	901.1	189.0	182.7	166.1	192.4	61.8	60.6	62.2	60.1	229.90	30.31	6977.36
2006/11/14	21:28:00	1202.6	894.1	194.2	253.2	214.0	186.0	471.8	900.2	189.5	182.7	166.1	192.4	61.7	60.6	62.3	60.6	229.70	30.32	6964.50
2006/11/14	21:29:00	1202.4	892.7	194.2	254.3	214.5	185.7	471.6	891.1	189.5	182.7	166.0	192.4	62.1	59.8	62.4	60.9	229.30	30.28	6943.20
2006/11/14	21:30:00	1201.9	892.4	194.2	253.9	214.7	185.7	471.0	887.3	189.2	182.7	166.1	192.5	62.4	59.7	62.3	60.6	229.20	29.97	6869.12
2006/11/14	21:31:00	1202.0	891.9	194.5	253.6	213.9	185.7	472.2	887.3	189.0	182.7	166.1	192.5	62.2	60.2	62.2	60.6	230.00	30.34	6978.20
2006/11/14	21:32:00	1202.3	890.9	194.5	253.8	214.2	185.7	471.5	900.0	189.2	182.5	166.1	192.5	62.0	60.0	61.8	60.6	229.90	30.31	6968.27
2006/11/14	21:33:00	1201.8	893.0	194.5	254.1	214.2	186.0	471.8	889.6	189.5	182.5	166.1	192.5	62.3	59.9	62.2	60.6	228.70	30.21	6921.11
2006/11/14	21:34:00	1201.8	894.4	194.5	254.0	214.4	186.2	471.8	883.6	189.7	182.9	166.1	192.5	62.4	60.1	62.3	60.6	229.90	30.33	6972.87
2006/11/14	21:35:00	1202.0	893.9	194.7	253.3	214.2	186.2	473.1	879.7	189.7	182.9	166.2	192.5	61.9	60.4	62.3	60.4	229.90	30.32	6970.57
2006/11/14	21:36:00	1202.5	894.2	194.7	254.1	214.4	186.0	472.4	914.4	189.5	182.9	166.2	192.5	62.1	60.4	62.6	60.8	230.20	30.35	6986.57
2006/11/14	21:37:00	1202.3	894.4	194.7	254.3	214.0	186.0	472.0	914.4	190.0	182.7	166.2	192.7	61.9	60.4	62.3	60.9	230.00	30.34	6980.50
2006/11/14	21:38:00	1201.9	892.7	195.0	253.2	214.0	186.2	472.4	912.0	189.7	183.0	166.4	192.7	62.3	60.6	62.3	60.6	229.20	30.20	6935.59
2006/11/14	21:39:00	1202.0	895.9	195.0	254.1	215.0	186.4	472.5	904.0	190.0	183.2	166.5	192.7	62.3	60.4	62.6	61.2	230.00	30.34	6978.20
2006/11/14	21:40:00	1201.9	896.8	195.0	254.5	214.7	186.5	472.4	915.7	189.9	183.0	166.6	192.9	62.6	59.6	62.3	60.9	230.10	30.34	6984.27
2006/11/14	21:41:00	1201.8	893.7	195.0	255.2	214.5	186.2	473.6	910.6	190.2	183.2	166.6	192.9	62.3	60.1	62.3	60.8	230.10	30.35	6985.84
2006/11/14	21:42:00	1201.6	894.1	195.0	254.0	214.7	186.4	472.7	925.1	190.0	183.2	166.7	193.0	62.6	60.4	62.6	60.9	230.00	30.35	6980.50
2006/11/14	21:43:00	1202.6	893.6	194.9	253.7	214.7	186.5	472.2	930.3	190.0	183.2	166.7	193.0	62.6	59.9	62.4	61.0	229.30	30.23	6931.74
2006/11/14	21:44:00	1202.7	894.9	195.2	253.7	215.1	186.5	474.1	909.8	189.9	183.4	166.8	193.0	62.3	59.9	62.0	60.6	229.70	30.27	6953.02
2006/11/14	21:45:00	1202.5	896.0	195.2	254.0	214.9	186.7	473.1	924.4	189.9	183.2	166.8	193.0	62.0	59.9	62.4	60.8	230.10	30.33	6981.23
2006/11/14	21:46:00	1202.4	896.1	195.0	254.9	214.7	187.0	472.4	915.2	190.0	183.2	166.8	193.0	61.8	60.2	62.0	60.4	230.00	30.34	6978.20
2006/11/14	21:47:00	1202.2	898.1	195.4	254.8	214.9	186.7	472.2	917.4	190.2	183.4	166.9	193.0	61.9	59.8	62.2	60.4	230.10	30.35	6983.54
2006/11/14	21:48:00	1202.4	893.6	195.4	254.7	215.0	186.7	472.0	911.5	190.0	183.5	166.9	193.2	62.2	59.9	62.1	60.2	230.10	30.32	6981.23
2006/11/14	21:49:00	1202.1	896.9	195.5	254.7	215.0	186.4	473.6	939.1	190.0	183.4	166.9	193.2	62.0	59.8	62.1	60.2	230.10	30.32	6976.63
2006/11/14	21:50:00	1202.3	896.6	195.5	255.1	215.2	187.0	472.2	929.5	190.5	183.5	166.9	193.2	62.3	60.2	62.6	60.9	230.10	30.33	6981.97
2006/11/14	21:51:00	1202.0	896.3	195.5	254.8	215.0	187.0	472.4	921.9	190.2	183.7	167.0	193.2	62.3	60.6	62.3	60.6	230.00	30.34	6980.50
2006/11/14	21:52:00	1202.5	894.3	195.5	254.8	214.7	187.4	474.5	946.1	190.5	183.5	167.0	193.4	62.0	60.0	62.3	60.4	230.10	30.34	6981.23
2006/11/14	21:53:00	1202.0	895.1	195.5	255.6	215.1	187.2	474.5	919.0	190.2	183.5	167.2	193.4	62.1	60.1	62.4	60.4	230.10	30.35	6983.54
2006/11/14	21:54:00	1202.9	895.2	195.9	255.7	215.2	187.2	474.7	950.3	190.5	183.7	167.2	193.5	61.9	60.4	62.3	60.4	230.10	30.35	6983.54
2006/11/14	21:55:00	1202.9	894.9	196.0	254.8	215.5	187.4	473.5	960.1	190.7	183.9	167.4	193.5	62.2	59.9	62.2	60.6	230.10	30.35	6985.84
2006/11/14	21:56:00	1203.0	893.1	196.0	254.5	215.5	187.5	475.2	939.8	190.5	183.9	167.4	193.5	61.9	59.9	62.3	60.6	230.00	30.35	6980.50
2006/11/14	21:57:00	1202.3	893.4	196.0	255.2	215.5	187.2	475.5	953.7	190.7	183.9	167.4	193.7	61.9	59.5	62.3	60.4	229.50	30.13	6914.84
2006/11/14	21:58:00	1203.1	895.6	196.2	255.6	215.4	187.9	473.7	953.8	190.9	183.9	167.4	193.7	62.3	60.1	62.6	60.8	230.00	30.33	6975.90
2006/11/14	21:59:00	1202.7	896.2	196.0	255.1	215.7	187.7	474.1	955.4	191.0	184.0	167.4	193.7	62.4	59.5	62.6	60.9	230.10	30.35	6983.54
2006/11/14	22:00:00	1203.2	895.7	196.2	254.4	215.9	187.5	471.7	968.9	190.7	184.0	167.5	193.7	61.9	60.0	62.2	60.4	230.10	30.35	6983.54
2006/11/14	22:01:00	1203.3	897.2	196.2	253.9	215.5	187.2	474.1	955.7	191.0	184.0	167.5	193.7	62.0	60.0	62.2	60.6	229.90	30.33	6975.90
2006/11/14	22:02:00	1203.0	899.4	196.2	255.3	215.9	188.0	472.4	954.3	191.2	184.4	167.6	193.7	62.0	60.6	62.3	60.9	229.60	30.23	6940.81
2006/11/14	22:03:00	1202.7	897.1	196.4	255.4	216.5	188.2	474.7	948.8	191.0	184.2	167.6	193.7	62.1	61.8	62.6	60.6	228.20	30.15	6880.23
2006/11/14	22:04:00	1203.3	896.2	196.4	255.7	216.5	188.2	472.8	944.1	191.4	184.5	167.7	193.9	62.6	61.9	62.8	61.5	230.10	30.34	6983.54
2006/11/14	22:05:00	1203.3	894.3	196.5	253.7	216.4	188.0	475.0	961.9	191.5	184.0	167.7	193.9	62.6	61.8	62.8	60.9	229.90	30.32	6970.57
2006/11/14	22:06:00	1204.3	893.5	196.5	254.7	215.7	188.4	474.7	965.8	190.7	184.2	167.7	193.9	62.8	61.9	62.8	60.1	229.50	30.27	6946.97
2006/11/14	22:07:00	1204.0	894.5	196.4	254.2	214.6	187.9	472.5	963.8	190.9	184.2	167.9	194.0	62.4	60.6	61.1	60.1	229.70	30.29	6957.61
2006/11/14	22:08:00	1203.6	899.0	196.5	254.3	214.9	188.5	475.0	969.1	191.5	184.5	167.9	194.0	62.2	61.2	61.1	60.4	230.10	30.34	6981.23
2006/11/14	22:09:00	1203.6	896.4	196.7	254.7	215.7	188.2	473.6	986.6	191.5	184.4	167.9	194.0	62.1	59.5	62.6	60.4	230.10	30.35	6983.54
2006/11/14	22:10:00	1203.3	895.6	196.5	254.7	215.7	188.2	473.4	973.1	191.2	184.2	167.9	194.0	62.1	59.5	62.4	60.4	229.50	30.25	6942.38
2006/11/14	22:11:00	1203.2	898.9	196.7	255.4	216.0	188.4	475.6	989.1	191.2	184.2	168.0	194.0	62.0	61.3	62.2	60.4	228.40	30.16	6888.54
2006/11/14	22:12:00	1203.4	894.8	196.7	255.6	215.7	188.0	476.5	997.9	191.5	184.5	168.1	194.2	62.1	59.6	62.2	60.8	229.90	30.32	6970.57

Heat Rise Test
1st Run

Date	Time	TC1	TC2	TC3	TC4	TC5	TC6	TC7	TC8	TC9	TC10	TC11	TC12	TC13	TC14	TC15	TC16	VDC	Amps	Watts
2006/11/14	22:13:00	1203.8	894.4	196.7	255.1	215.5	188.0	475.5	994.5	190.9	184.2	168.1	194.2	62.2	59.8	62.1	60.8	229.50	30.30	6953.85
2006/11/14	22:14:00	1203.0	898.1	196.9	254.8	216.2	188.5	475.2	976.7	191.2	184.4	168.1	194.2	62.4	61.0	62.4	60.6	230.10	30.34	6981.23
2006/11/14	22:15:00	1203.3	895.4	197.0	255.4	215.4	188.5	474.5	1001.1	191.2	184.5	168.1	194.2	62.0	60.2	62.0	60.4	229.80	30.29	6960.64
2006/11/14	22:16:00	1204.0	895.9	197.0	255.6	215.4	188.9	475.8	972.6	191.7	184.7	168.1	194.2	62.0	60.4	62.1	60.9	230.10	30.34	6981.23
2006/11/14	22:17:00	1203.9	894.6	197.0	255.4	215.9	188.0	475.3	996.6	191.4	184.5	168.1	194.4	62.3	60.4	62.4	60.8	229.40	30.29	6948.53
2006/11/14	22:18:00	1203.4	897.3	197.0	255.3	216.0	188.7	476.3	992.6	191.4	184.5	168.3	194.4	62.3	60.2	62.4	60.6	229.30	30.30	6947.79
2006/11/14	22:19:00	1203.6	897.6	197.2	254.9	215.7	188.9	475.2	994.5	191.7	184.7	168.2	194.4	62.0	60.1	62.3	60.4	228.70	30.19	6904.45
2006/11/14	22:20:00	1203.2	900.0	197.4	255.4	215.5	188.5	476.8	976.1	191.4	184.9	168.4	194.5	61.8	61.4	62.0	60.2	230.10	30.31	6977.36
2006/11/14	22:21:00	1203.2	894.5	197.2	255.4	215.7	188.7	476.0	999.6	191.4	185.0	168.4	194.5	61.9	60.2	62.3	60.2	229.60	30.28	6959.18
2006/11/14	22:22:00	1203.6	896.9	197.5	255.4	216.2	188.7	475.2	967.7	191.2	185.0	168.4	194.5	62.3	59.8	62.4	61.0	229.80	30.21	6954.34
2006/11/14	22:23:00	1203.4	896.7	197.2	255.4	215.9	188.4	476.8	1010.1	191.5	184.7	168.4	194.5	62.1	60.1	62.3	60.9	229.70	30.17	6936.08
2006/11/14	22:24:00	1204.1	897.9	197.5	254.6	216.2	188.9	475.8	1005.6	191.7	184.7	168.5	194.5	61.7	60.0	62.0	60.2	229.80	30.29	6960.64
2006/11/14	22:25:00	1204.0	895.6	197.5	255.9	216.4	189.0	475.6	1002.5	192.0	185.0	168.5	194.7	61.8	60.8	62.1	60.6	229.40	30.27	6943.94
2006/11/14	22:26:00	1203.9	894.3	197.7	256.9	216.5	189.2	475.6	991.1	192.0	185.0	168.6	194.7	62.1	60.1	62.4	60.6	230.00	30.33	6978.20
2006/11/14	22:27:00	1204.5	894.8	197.7	255.7	216.2	189.4	476.7	984.8	191.9	185.2	168.8	194.7	62.6	59.9	62.3	60.4	229.00	30.07	6908.93
2006/11/14	22:28:00	1203.8	899.3	197.7	256.1	216.5	189.7	476.0	994.8	192.5	185.5	168.8	194.9	62.4	60.1	62.6	60.9	229.70	30.30	6959.91
2006/11/14	22:29:00	1203.8	898.1	197.9	256.4	216.7	189.7	477.0	968.8	192.5	185.5	168.8	195.0	62.8	61.3	63.1	60.8	229.70	30.31	6965.24
2006/11/14	22:30:00	1204.4	898.3	197.9	256.9	216.0	189.7	476.8	990.6	193.2	185.7	168.8	195.0	62.4	62.1	62.8	61.6	229.90	30.20	6952.04
2006/11/14	22:31:00	1204.4	893.5	197.7	254.9	216.2	189.7	473.5	1016.0	193.2	185.9	168.9	195.0	62.1	61.4	61.9	61.7	229.80	30.29	6967.54
2006/11/14	22:32:00	1204.0	895.6	198.0	256.4	216.9	189.7	476.4	994.5	193.0	185.9	169.1	195.0	62.4	61.5	62.6	61.2	229.50	30.28	6949.26
2006/11/14	22:33:00	1203.9	898.1	198.0	256.4	216.7	189.9	477.9	1001.1	193.2	186.0	169.1	195.2	62.3	62.0	62.8	62.0	229.90	30.32	6970.57
2006/11/14	22:34:00	1203.4	893.4	198.0	255.4	216.5	189.9	476.8	993.7	192.2	186.0	169.0	195.2	62.0	61.9	62.0	60.8	229.90	30.29	6963.67
2006/11/14	22:35:00	1203.9	896.5	198.0	255.9	216.5	190.0	475.7	983.5	193.5	185.9	169.0	195.2	63.2	62.3	62.6	61.5	229.90	30.33	6972.87
2006/11/14	22:36:00	1204.1	895.6	198.0	255.6	217.2	189.7	476.0	869.7	193.4	186.2	169.1	195.2	63.2	62.6	61.9	61.8	229.80	30.31	6965.24
2006/11/14	22:37:00	1204.4	897.1	198.2	255.9	216.9	189.9	475.9	856.9	193.9	186.5	169.3	195.2	62.8	62.1	63.0	62.3	229.70	30.28	6955.32
2006/11/14	22:38:00	1204.4	898.1	198.2	256.9	216.9	190.2	476.5	845.7	193.7	186.5	169.4	195.4	62.6	61.9	63.1	61.7	229.80	30.28	6963.67
2006/11/14	22:39:00	1204.4	898.1	198.2	256.7	217.0	190.2	475.9	823.0	193.7	186.5	169.4	195.4	62.3	62.0	63.1	61.9	229.80	30.31	6965.24
2006/11/14	22:40:00	1204.4	900.6	198.5	255.9	216.9	190.2	475.0	823.1	193.7	186.2	169.5	195.4	62.8	61.3	63.1	61.5	229.60	30.27	6959.18
2006/11/14	22:41:00	1205.1	900.1	198.5	256.4	217.5	190.2	475.3	834.3	193.5	186.5	169.6	195.5	62.6	61.8	62.8	61.5	229.90	30.32	6972.87
2006/11/14	22:42:00	1204.7	900.2	198.5	256.5	217.0	190.2	477.1	811.0	193.5	186.7	169.8	195.5	62.3	62.8	62.8	61.4	229.50	30.25	6942.38
2006/11/14	22:43:00	1203.8	899.2	198.5	255.9	217.5	190.2	475.6	814.5	193.9	186.5	169.6	195.5	62.3	62.3	62.2	61.6	229.90	30.28	6967.43
2006/11/14	22:44:00	1204.1	900.1	198.5	257.0	217.8	190.4	475.6	827.4	193.9	186.7	169.8	195.5	62.2	62.6	62.8	61.5	229.30	30.26	6938.62
2006/11/14	22:45:00	1205.1	898.7	198.7	256.5	217.7	190.4	476.6	827.3	193.7	186.7	169.8	195.7	62.2	61.7	63.0	60.9	229.80	30.29	6963.67
2006/11/14	22:46:00	1205.0	895.1	198.7	256.2	216.7	190.2	475.3	822.6	193.4	186.7	169.8	195.7	62.4	60.2	62.3	60.6	228.60	30.19	6901.43
2006/11/14	22:47:00	1205.1	898.6	198.8	256.5	217.0	190.2	477.6	822.3	193.4	186.7	169.8	195.7	62.6	60.2	62.4	60.9	229.80	30.32	6967.54
2006/11/14	22:48:00	1204.7	896.7	199.0	256.5	216.2	190.4	477.2	827.0	193.9	187.0	169.9	195.7	61.4	60.2	62.1	60.6	229.70	30.29	6957.61
2006/11/14	22:49:00	1205.8	898.6	199.2	256.4	217.2	190.5	477.6	829.9	193.5	186.7	170.1	195.9	60.4	60.0	61.4	60.2	230.00	30.33	6975.90
2006/11/14	22:50:00	1204.4	898.4	199.0	256.9	217.2	190.5	478.3	835.0	194.2	187.0	170.0	195.9	60.8	61.0	61.7	60.8	229.50	30.24	6940.08
2006/11/14	22:51:00	1203.9	898.3	199.0	256.7	217.5	190.7	478.0	865.0	194.2	187.2	170.0	195.9	61.5	61.3	62.0	61.5	230.00	30.32	6973.60
2006/11/14	22:52:00	1204.8	896.6	199.0	255.9	216.2	190.2	478.7	832.3	194.2	187.2	170.1	196.0	62.0	61.5	62.0	61.3	229.90	30.26	6956.77
2006/11/14	22:53:00	1204.7	900.1	199.0	256.7	216.5	190.9	477.1	835.9	194.0	187.2	170.3	196.0	62.2	60.8	62.6	61.0	230.10	30.33	6981.23
2006/11/14	22:54:00	1204.7	897.9	199.2	257.2	217.8	190.7	479.0	845.4	194.0	187.2	170.3	196.0	62.4	61.6	62.4	61.3	230.00	30.34	6980.50
2006/11/14	22:55:00	1205.4	895.4	199.2	255.9	217.8	191.0	477.1	863.5	194.5	187.0	170.3	196.0	62.8	62.3	62.8	61.3	229.90	30.30	6965.97
2006/11/14	22:56:00	1205.4	898.9	199.2	256.2	217.0	191.2	478.3	850.7	193.9	187.0	170.3	196.0	62.6	62.3	63.0	61.2	229.90	30.33	6972.87
2006/11/14	22:57:00	1205.4	897.6	199.5	256.9	217.0	191.0	477.6	854.2	194.0	187.0	170.4	196.2	62.6	62.4	62.6	61.2	227.70	30.08	6849.22
2006/11/14	22:58:00	1205.4	897.0	199.3	256.4	218.0	191.0	477.1	857.4	194.7	187.5	170.4	196.2	62.4	62.4	62.2	61.8	230.00	30.34	6978.20
2006/11/14	22:59:00	1204.9	901.3	199.5	256.7	217.7	191.4	477.7	852.7	195.0	187.5	170.4	196.2	62.1	62.4	63.2	61.7	229.20	30.19	6919.55
2006/11/14	23:00:00	1205.1	899.0	199.7	256.7	218.0	191.0	477.7	859.5	195.0	187.7	170.4	196.2	62.1	63.0	62.8	62.2	229.20	30.21	6924.13
2006/11/14	23:01:00	1205.9	899.8	199.7	257.2	218.2	191.0	476.7	880.3	194.7	187.7	170.5	196.2	62.8	62.0	62.2	61.5	230.10	30.34	6983.54
2006/11/14	23:02:00	1205.2	897.8	199.7	257.4	218.0	191.2	478.8	861.4	195.2	187.9	170.6	196.4	62.4	62.6	62.6	61.9	229.60	30.33	6966.06
2006/11/14	23:03:00	1205.1	897.5	199.8	256.5	218.0	191.4	478.0	870.2	195.2	188.0	170.6	196.5	62.8	62.6	63.2	62.2	230.10	30.34	6981.23
2006/11/14	23:04:00	1205.4	899.0	200.0	256.9	217.3	191.0	476.8	882.4	194.2	187.9	170.8	196.5	62.4	60.8	63.0	61.3	227.30	29.89	6794.00
2006/11/14	23:05:00	1205.6	900.6	200.0	257.2	217.3	191.4	479.1	879.4	194.5	187.7	170.8	196.5	62.6	61.2	62.8	61.5	229.80	30.30	6962.94
2006/11/14	23:06:00	1205.4	898.6	200.0	257.4	217.2	191.5	477.7	858.0	194.2	187.9	170.9	196.5	62.6	61.0	63.4	61.1	230.10	30.35	6983.54
2006/11/14	23:07:00	1205.0	901.7	199.8	257.2	217.5	191.5	479.2	864.3	194.4	187.5	170.8	196.7	62.8	61.5	62.8	61.5	230.10	30.35	6983.54
2006/11/14	23:08:00	1206.1	896.9	200.0	257.4	217.2	190.7	478.7	883.9	194.2	187.5	170.8	196.7	62.1	60.9	62.3	60.8	230.10	30.35	6985.84

Heat Rise Test
1st Run

Date	Time	TC1	TC2	TC3	TC4	TC5	TC6	TC7	TC8	TC9	TC10	TC11	TC12	TC13	TC14	TC15	TC16	VDC	Amps	Watts
2006/11/14	23:09:00	1205.9	899.4	200.2	257.2	217.0	191.0	479.0	874.9	194.5	187.7	170.9	196.7	61.6	60.4	62.0	60.4	230.20	30.35	6986.57
2006/11/14	23:10:00	1205.8	899.4	200.2	256.2	217.7	191.4	478.2	882.2	194.7	187.9	171.0	196.7	62.1	60.2	62.0	61.2	230.20	30.35	6986.57
2006/11/14	23:11:00	1204.5	898.4	200.3	256.7	217.2	191.5	479.9	871.9	194.4	187.9	170.9	196.7	61.7	60.6	62.3	60.6	230.10	30.35	6983.54
2006/11/14	23:12:00	1205.6	902.0	200.2	256.9	217.2	191.2	479.1	875.4	194.2	187.7	171.0	196.9	62.1	60.1	62.0	60.4	230.10	30.33	6981.97
2006/11/14	23:13:00	1205.0	902.1	200.5	256.7	217.2	191.5	479.1	883.6	194.7	187.9	171.0	196.9	62.1	59.9	62.3	61.1	230.10	30.35	6983.54
2006/11/14	23:14:00	1206.3	895.6	200.2	256.2	217.5	191.0	478.5	886.2	194.5	187.7	171.0	197.0	62.4	60.4	62.2	60.9	230.20	30.35	6986.57
2006/11/14	23:15:00	1205.4	898.1	200.5	257.4	217.3	191.0	478.0	869.7	195.0	188.0	171.0	197.0	62.1	60.4	62.3	61.1	230.10	30.34	6983.54
2006/11/14	23:16:00	1205.4	896.3	200.5	256.7	217.5	191.9	478.7	893.1	194.7	188.0	171.0	197.0	62.3	60.8	62.0	61.3	230.10	30.35	6983.54
2006/11/14	23:17:00	1205.4	898.1	200.5	256.2	218.5	192.0	479.2	875.6	194.9	188.2	171.3	197.0	62.6	61.2	62.8	60.6	230.10	30.34	6983.54
2006/11/14	23:18:00	1205.1	897.2	200.5	256.7	218.2	192.0	478.0	865.7	194.7	188.2	171.3	197.0	62.8	61.1	62.6	60.4	230.10	30.35	6983.54
2006/11/14	23:19:00	1205.2	902.1	200.7	257.4	216.9	191.9	480.1	897.9	194.5	188.2	171.3	197.0	62.2	60.6	62.3	60.1	229.90	30.33	6972.87
2006/11/14	23:20:00	1204.9	900.2	200.7	257.4	217.7	191.7	479.3	888.9	194.5	187.9	171.3	197.0	61.8	59.9	62.0	60.2	230.20	30.35	6986.57
2006/11/14	23:21:00	1204.7	901.4	201.0	258.2	217.0	192.0	479.9	874.3	194.9	188.2	171.3	197.0	61.9	60.1	62.0	60.4	229.90	30.32	6970.57
2006/11/14	23:22:00	1204.5	900.8	201.0	258.9	217.2	192.0	479.4	915.9	194.9	188.4	171.3	197.2	62.3	61.2	62.3	60.8	230.20	30.35	6986.57
2006/11/14	23:23:00	1206.2	899.5	200.8	257.9	218.7	192.0	479.8	903.5	195.0	188.5	171.5	197.2	62.6	61.1	62.2	60.4	230.10	30.35	6983.54
2006/11/14	23:24:00	1206.1	900.2	200.8	257.7	219.0	192.0	479.1	896.2	195.4	188.4	171.5	197.2	62.8	61.2	62.6	60.4	230.10	30.35	6983.54
2006/11/14	23:25:00	1205.7	899.2	200.8	257.9	218.7	192.0	481.0	909.2	195.0	188.4	171.6	197.2	62.6	60.6	62.2	60.4	230.20	30.35	6986.57
2006/11/14	23:26:00	1205.4	897.1	201.2	257.5	218.3	192.4	481.5	883.4	195.2	188.5	171.6	197.2	62.2	60.4	62.2	60.4	230.10	30.34	6981.23
2006/11/14	23:27:00	1205.9	899.9	201.2	257.9	218.3	192.2	479.5	910.4	195.2	188.5	171.6	197.4	62.6	60.6	62.6	60.4	230.20	30.35	6986.57
2006/11/14	23:28:00	1206.3	901.9	201.2	258.2	219.1	192.5	480.4	899.6	195.5	188.4	171.8	197.5	62.8	61.2	63.0	60.8	230.10	30.34	6983.54
2006/11/14	23:29:00	1205.8	899.3	201.2	257.2	218.3	192.2	479.8	888.4	195.5	188.5	171.8	197.5	62.4	60.1	62.6	60.4	230.20	30.35	6986.57
2006/11/14	23:30:00	1206.6	901.0	201.2	257.9	218.2	192.2	481.2	924.9	195.2	188.4	171.8	197.5	62.3	59.6	62.4	60.4	230.10	30.34	6983.54
2006/11/14	23:31:00	1205.9	899.7	201.2	258.8	218.0	192.5	480.4	910.1	195.7	188.7	171.8	197.5	62.2	60.0	62.4	60.6	230.10	30.34	6983.54
2006/11/14	23:32:00	1205.5	898.1	201.2	257.9	218.3	192.5	480.8	927.4	195.7	188.5	171.8	197.5	62.0	60.1	62.3	60.9	229.90	30.33	6972.87
2006/11/14	23:33:00	1206.6	900.6	201.5	257.9	218.0	192.9	481.0	903.5	195.2	188.7	172.0	197.7	62.4	61.1	63.0	60.8	229.90	30.33	6972.87
2006/11/14	23:34:00	1206.5	899.0	201.7	257.2	218.8	192.7	480.5	931.9	195.5	188.5	172.0	197.7	62.6	61.5	62.8	60.4	230.10	30.35	6983.54
2006/11/14	23:35:00	1206.6	898.9	201.5	258.7	216.7	193.0	480.0	933.3	195.4	188.7	172.0	197.7	61.7	60.8	61.4	60.4	230.00	30.34	6978.20
2006/11/14	23:36:00	1206.8	898.3	201.5	257.7	218.0	192.9	478.2	943.8	195.7	188.9	172.0	197.7	62.1	61.1	62.0	60.4	230.10	30.33	6983.54
2006/11/14	23:37:00	1206.9	898.9	201.7	257.5	218.5	193.0	480.8	942.3	196.4	189.2	172.0	197.7	61.8	61.8	62.0	61.3	227.90	30.12	6864.35
2006/11/14	23:38:00	1206.4	902.5	201.7	257.9	218.7	193.2	481.1	940.1	196.5	189.4	172.0	197.7	62.3	61.9	62.6	61.4	230.00	30.32	6973.60
2006/11/14	23:39:00	1206.8	898.1	201.7	257.8	218.8	192.9	480.8	934.1	196.9	189.5	172.1	197.9	62.2	62.0	62.3	61.8	229.40	30.21	6936.22
2006/11/14	23:40:00	1206.6	902.2	201.7	258.0	218.5	192.5	480.3	906.6	196.4	189.5	172.3	197.9	61.9	61.5	62.1	61.0	230.10	30.34	6981.23
2006/11/14	23:41:00	1206.4	901.3	202.0	258.3	218.2	193.5	480.8	929.1	197.2	189.5	172.1	197.9	62.8	62.0	62.0	61.9	229.00	30.21	6918.09
2006/11/14	23:42:00	1207.1	900.6	202.0	258.2	219.3	193.4	480.2	944.6	196.5	189.7	172.3	197.9	62.4	61.8	63.4	62.1	230.10	30.34	6981.23
2006/11/14	23:43:00	1206.1	898.9	202.0	258.9	217.8	193.2	481.7	942.2	196.7	189.5	172.3	198.0	62.3	61.4	62.8	61.6	230.10	30.34	6983.54
2006/11/14	23:44:00	1206.2	899.5	202.2	258.7	218.5	193.2	481.0	945.2	195.7	189.5	172.5	198.0	62.1	61.8	62.8	60.4	230.00	30.33	6978.20
2006/11/14	23:45:00	1206.6	900.8	202.0	258.2	218.5	193.0	481.2	925.4	196.0	189.4	172.5	198.0	62.2	60.6	62.3	60.4	229.20	30.25	6933.30
2006/11/14	23:46:00	1206.8	899.2	202.2	258.0	218.2	192.9	480.6	927.5	196.0	189.2	172.5	198.0	62.1	60.0	62.3	60.4	229.20	30.25	6933.30
2006/11/14	23:47:00	1206.2	901.6	202.3	258.6	217.7	193.0	481.4	942.2	196.0	189.2	172.5	198.2	61.5	60.1	61.9	60.1	230.10	30.34	6983.54
2006/11/14	23:48:00	1206.6	900.0	202.2	258.5	218.0	193.0	482.2	942.2	196.2	189.5	172.6	198.2	61.7	60.0	62.4	60.2	230.10	30.25	6963.55
2006/11/14	23:49:00	1206.1	900.4	202.5	258.6	217.7	193.5	481.2	932.4	196.2	189.7	172.8	198.2	61.7	61.0	62.3	60.4	230.00	30.34	6978.20
2006/11/14	23:50:00	1206.1	900.4	202.5	257.9	219.0	193.5	482.2	918.9	196.7	189.5	172.8	198.2	62.3	61.3	62.4	61.1	230.10	30.34	6983.54
2006/11/14	23:51:00	1206.9	898.9	202.5	258.9	219.5	194.0	480.6	941.6	197.2	189.7	172.8	198.2	62.4	61.9	62.8	61.4	229.50	30.27	6946.97
2006/11/14	23:52:00	1206.4	901.1	202.5	259.7	219.0	193.5	482.2	925.9	197.4	190.2	172.8	198.4	62.4	62.3	62.8	61.7	229.80	30.30	6962.94
2006/11/14	23:53:00	1206.9	899.6	202.7	258.2	219.8	193.7	481.9	941.1	197.7	190.2	172.8	198.5	62.8	62.4	62.6	62.0	229.90	30.31	6968.27
2006/11/14	23:54:00	1206.9	901.9	202.7	258.5	219.5	194.0	480.6	953.8	197.5	190.2	173.0	198.5	62.6	61.6	62.8	61.7	229.90	30.31	6972.87
2006/11/14	23:55:00	1206.8	902.4	202.8	258.7	219.0	193.7	481.7	926.6	196.5	189.9	173.1	198.5	62.6	60.9	62.3	60.4	229.90	30.32	6970.57
2006/11/14	23:56:00	1207.4	903.2	202.8	258.3	218.7	193.9	483.0	951.1	196.7	190.0	173.0	198.5	61.7	61.0	62.1	60.4	230.10	30.34	6981.23
2006/11/14	23:57:00	1207.5	900.5	202.8	258.2	219.5	194.2	481.5	968.6	197.2	190.0	173.3	198.5	61.6	60.8	62.0	60.6	230.10	30.34	6983.54
2006/11/14	23:58:00	1207.2	902.9	203.0	258.8	219.3	194.0	480.6	960.6	197.0	190.0	173.3	198.7	62.2	60.2	62.8	60.8	229.80	30.26	6953.75
2006/11/14	23:59:00	1207.6	903.1	203.0	258.9	219.2	193.7	480.5	955.4	197.0	190.0	173.3	198.7	62.4	60.1	62.6	60.6	229.70	30.32	6964.50
2006/11/15	00:00:00	1207.7	902.2	203.0	258.6	219.1	193.7	482.6	975.3	197.0	190.2	173.3	198.7	62.4	60.2	62.4	61.3	229.30	30.24	6934.03
2006/11/15	00:01:00	1207.6	903.7	202.7	259.2	218.8	193.7	482.0	965.6	196.5	190.2	173.3	198.7	62.1	60.8	62.4	60.2	229.90	30.32	6970.57
2006/11/15	00:02:00	1206.3	903.6	203.1	258.4	219.3	194.0	481.7	957.4	196.7	190.2	173.3	198.8	62.0	61.6	62.3	60.0	230.10	30.33	6978.93
2006/11/15	00:03:00	1206.6	900.6	203.2	258.6	219.8	194.5	480.4	981.8	197.7	190.5	173.3	199.0	62.6	62.0	62.6	61.7	230.00	30.33	6975.90
2006/11/15	00:04:00	1206.9	899.2	203.2	259.0	219.7	194.5	482.6	949.3	197.9	190.7	173.5	199.0	62.6	61.8	63.1	61.6	229.80	30.34	6976.73

Heat Rise Test
1st Run

Date	Time	TC1	TC2	TC3	TC4	TC5	TC6	TC7	TC8	TC9	TC10	TC11	TC12	TC13	TC14	TC15	TC16	VDC	Amps	Watts
2006/11/15	00:05:00	1206.6	897.9	203.3	259.4	219.8	194.5	482.5	963.2	197.7	190.5	173.5	199.0	63.0	61.5	62.8	61.6	230.00	30.33	6978.93
2006/11/15	00:06:00	1206.9	901.9	203.3	259.3	219.5	194.9	482.0	971.4	197.7	190.7	173.5	199.0	63.0	61.8	62.8	61.7	229.40	30.23	6939.35
2006/11/15	00:07:00	1206.8	902.1	203.3	258.5	219.5	194.7	482.0	952.6	197.7	190.9	173.6	199.0	63.1	61.6	62.8	61.1	230.00	30.29	6972.76
2006/11/15	00:08:00	1207.9	901.1	203.5	258.5	220.0	194.7	482.0	968.6	197.7	190.7	173.6	199.0	63.1	61.8	63.0	61.2	229.90	30.29	6972.76
2006/11/15	00:09:00	1208.4	899.3	203.5	259.5	220.1	194.9	482.8	956.2	198.0	190.7	173.6	199.2	63.3	61.8	62.1	61.7	230.10	30.33	6981.23
2006/11/15	00:10:00	1207.3	902.9	203.5	259.1	219.2	194.7	483.4	943.2	198.0	191.0	173.6	199.2	62.2	61.4	62.0	61.3	230.10	30.34	6981.23
2006/11/15	00:11:00	1207.3	903.9	203.6	258.4	219.6	194.7	483.6	956.2	198.5	191.0	173.8	199.2	62.6	61.7	62.3	61.4	230.00	30.34	6978.20
2006/11/15	00:12:00	1207.6	902.8	203.7	259.3	220.0	194.7	482.2	969.5	198.4	191.2	173.8	199.2	62.4	61.7	63.1	61.7	229.90	30.22	6959.67
2006/11/15	00:13:00	1207.6	901.3	203.7	258.8	219.5	195.2	482.5	978.4	198.2	191.2	174.0	199.2	62.1	61.9	62.2	61.4	229.30	30.26	6938.62
2006/11/15	00:14:00	1207.7	900.6	204.0	258.7	220.0	195.0	482.2	954.1	198.5	191.5	173.8	199.3	62.0	62.6	63.3	62.4	230.00	30.31	6971.30
2006/11/15	00:15:00	1207.6	901.6	203.6	258.5	219.6	195.2	481.9	981.5	198.7	191.4	174.0	199.5	63.3	62.6	62.6	62.0	229.90	30.33	6972.87
2006/11/15	00:16:00	1207.3	901.9	204.0	258.5	219.5	194.9	483.0	988.2	197.9	191.5	174.0	199.5	62.4	62.0	63.3	61.1	229.30	30.26	6938.62
2006/11/15	00:17:00	1206.9	901.6	203.7	258.8	220.0	194.9	483.4	982.1	198.4	191.4	174.0	199.5	62.1	62.8	63.0	61.2	229.90	30.30	6965.97
2006/11/15	00:18:00	1206.9	901.7	204.0	259.2	219.1	194.7	483.0	953.5	198.7	192.0	174.0	199.7	61.8	62.4	62.0	61.9	230.10	30.33	6978.93
2006/11/15	00:19:00	1206.9	902.0	204.1	259.3	219.7	195.0	484.7	986.6	198.2	191.4	174.1	199.7	62.3	61.8	62.2	61.8	230.00	30.33	6981.23
2006/11/15	00:20:00	1206.8	901.4	204.0	259.4	219.6	195.2	482.7	982.1	198.5	191.5	174.3	199.7	62.3	61.9	62.2	61.4	229.80	30.31	6965.24
2006/11/15	00:21:00	1206.9	900.3	204.1	259.0	220.0	195.2	483.4	982.1	198.8	191.7	174.0	199.7	62.2	61.3	62.6	61.8	229.00	30.22	6920.38
2006/11/15	00:22:00	1207.1	902.2	204.2	259.4	219.7	195.2	483.1	979.3	197.7	191.5	174.3	199.7	62.1	60.4	62.1	60.4	229.60	30.29	6954.58
2006/11/15	00:23:00	1207.2	904.7	204.2	259.4	220.0	195.0	483.2	976.6	198.0	191.5	174.3	199.7	62.3	61.9	62.0	60.6	230.10	30.33	6978.93
2006/11/15	00:24:00	1207.2	901.6	204.2	259.2	220.0	195.2	484.3	981.8	198.4	191.7	174.3	199.7	62.2	62.0	62.4	60.9	229.30	30.20	6924.86
2006/11/15	00:25:00	1207.3	900.1	204.3	258.8	220.0	195.5	481.5	985.7	198.8	191.7	174.3	199.7	63.1	61.9	62.1	61.7	230.00	30.32	6973.60
2006/11/15	00:26:00	1207.7	899.3	204.3	259.3	220.3	195.2	484.4	972.7	198.4	191.9	174.5	199.8	62.6	60.9	62.4	61.0	228.60	30.18	6899.15
2006/11/15	00:27:00	1207.7	898.1	204.5	259.1	219.8	195.4	484.0	993.5	198.2	191.5	174.5	199.8	62.6	61.5	62.6	61.0	230.10	30.33	6981.23
2006/11/15	00:28:00	1208.4	900.8	204.5	258.7	220.3	195.4	482.6	981.1	198.5	191.9	174.6	200.0	62.4	61.7	63.0	61.2	229.90	30.30	6965.97
2006/11/15	00:29:00	1207.9	903.7	204.5	259.2	220.5	195.5	484.2	983.5	199.2	192.2	174.5	200.0	62.1	62.0	62.2	61.7	228.70	30.20	6906.74
2006/11/15	00:30:00	1207.5	899.9	204.6	259.0	219.5	195.9	483.7	999.4	199.3	192.2	174.5	200.0	62.8	62.1	62.4	61.9	230.00	30.33	6975.90
2006/11/15	00:31:00	1207.4	902.4	204.6	259.8	221.0	195.7	484.6	982.7	199.2	192.2	174.6	200.0	62.0	62.1	62.4	61.4	229.90	30.32	6970.57
2006/11/15	00:32:00	1207.6	901.9	204.6	259.9	220.9	195.9	484.3	985.5	199.0	192.2	174.8	200.2	62.1	61.7	62.3	61.2	230.00	30.33	6978.93
2006/11/15	00:33:00	1207.9	901.0	204.8	260.5	220.9	195.7	484.5	977.8	199.2	192.4	174.8	200.2	62.3	61.9	62.6	61.5	229.60	30.28	6952.29
2006/11/15	00:34:00	1207.6	901.1	204.8	260.5	221.2	195.9	484.4	990.3	199.5	192.4	174.6	200.2	62.6	62.2	63.1	62.0	229.10	30.22	6923.40
2006/11/15	00:35:00	1207.6	900.1	205.0	260.0	221.0	196.2	485.1	987.5	199.2	192.4	174.8	200.2	62.2	61.8	63.1	61.3	229.50	30.25	6942.38
2006/11/15	00:36:00	1207.5	903.0	205.0	259.5	221.0	196.2	483.7	937.8	199.2	192.4	174.8	200.2	62.8	62.6	62.8	61.4	230.00	30.32	6973.60
2006/11/15	00:37:00	1207.9	903.2	205.0	260.4	220.7	196.0	484.9	920.8	199.7	192.4	175.0	200.3	61.9	62.6	62.3	61.6	230.00	30.31	6971.30
2006/11/15	00:38:00	1208.0	901.7	205.0	259.7	219.7	196.0	484.7	920.8	199.2	192.5	175.0	200.3	62.6	61.7	62.6	61.5	230.00	30.33	6978.20
2006/11/15	00:39:00	1208.6	902.4	205.1	259.5	220.5	196.0	484.1	934.6	199.5	192.5	175.0	200.3	63.1	61.9	63.2	61.0	230.10	30.33	6978.93
2006/11/15	00:40:00	1208.4	901.9	205.0	259.1	220.9	196.0	483.7	921.2	199.5	192.5	175.2	200.5	62.8	62.2	62.2	61.1	229.80	30.31	6965.24
2006/11/15	00:41:00	1208.4	903.6	205.2	260.3	220.9	196.2	483.5	905.9	200.2	192.7	175.2	200.5	62.4	62.0	63.2	62.6	229.40	30.25	6939.35
2006/11/15	00:42:00	1208.4	903.8	205.2	260.3	220.1	196.0	484.7	904.4	199.3	192.7	175.2	200.5	63.0	62.0	62.2	62.4	230.00	30.32	6973.60
2006/11/15	00:43:00	1208.9	904.0	205.5	259.5	220.5	196.5	483.8	919.9	199.2	192.5	175.2	200.5	62.3	62.0	62.8	61.8	229.50	30.27	6946.97
2006/11/15	00:44:00	1208.6	899.7	205.5	259.4	220.9	196.4	484.6	928.6	200.2	193.0	175.3	200.5	62.1	62.2	62.8	61.9	229.50	30.27	6946.97
2006/11/15	00:45:00	1208.9	901.0	205.5	260.0	221.0	196.7	484.2	934.4	199.8	193.2	175.3	200.7	62.2	62.2	63.3	61.7	229.60	30.19	6931.62
2006/11/15	00:46:00	1208.3	902.5	205.6	260.0	220.8	196.7	485.4	898.9	200.0	193.2	175.3	200.7	62.3	62.8	62.8	61.8	230.00	30.32	6973.60
2006/11/15	00:47:00	1207.9	900.1	205.6	259.8	221.4	196.4	483.7	912.3	200.2	193.4	175.3	200.7	62.6	62.6	63.0	61.7	229.80	30.28	6958.34
2006/11/15	00:48:00	1208.9	902.7	205.7	260.9	221.4	196.5	484.9	921.9	199.7	193.2	175.5	200.7	62.8	62.6	62.8	61.4	229.90	30.32	6970.57
2006/11/15	00:49:00	1209.0	902.0	205.7	259.8	221.4	196.7	484.4	951.3	200.2	193.2	175.5	200.8	62.2	62.8	63.4	61.2	230.10	30.33	6978.93
2006/11/15	00:50:00	1208.4	900.6	205.7	260.4	221.1	196.5	484.3	920.8	200.2	193.2	175.5	200.8	62.2	62.4	62.8	61.4	229.90	30.30	6965.97
2006/11/15	00:51:00	1209.0	899.4	205.6	259.8	220.7	196.9	484.5	913.4	200.2	193.0	175.5	201.0	62.8	62.4	62.3	61.9	230.00	30.33	6978.93
2006/11/15	00:52:00	1208.9	901.0	205.7	260.1	221.4	196.7	485.7	926.3	200.2	193.2	175.7	201.0	62.4	61.9	62.6	61.6	230.10	30.32	6978.93
2006/11/15	00:53:00	1208.9	906.3	206.0	260.1	221.4	196.7	484.6	946.0	200.0	193.2	175.5	201.0	62.2	61.8	62.6	61.6	228.90	30.23	6919.65
2006/11/15	00:54:00	1209.0	904.9	206.0	259.9	220.7	196.7	485.1	949.3	200.2	193.2	175.8	201.0	62.3	62.0	62.8	61.3	229.80	30.28	6958.34
2006/11/15	00:55:00	1208.6	905.8	205.3	259.7	220.2	196.9	484.7	928.6	200.0	193.2	175.8	201.0	62.4	62.0	62.1	61.0	230.00	30.34	6978.20
2006/11/15	00:56:00	1208.6	903.8	206.0	260.6	220.8	197.0	483.7	922.7	200.5	193.5	175.5	201.0	62.4	62.8	63.2	61.7	229.80	30.30	6962.94
2006/11/15	00:57:00	1208.3	902.9	206.1	260.6	220.7	196.9	484.2	959.9	200.5	193.5	175.8	201.0	62.8	61.5	62.3	61.6	229.90	30.32	6970.57
2006/11/15	00:58:00	1208.2	901.9	206.1	261.2	220.5	197.0	485.0	962.1	200.0	193.4	176.0	201.2	62.6	61.6	62.8	60.6	230.10	30.32	6976.63
2006/11/15	00:59:00	1208.7	903.0	206.2	260.8	220.9	197.2	484.0	964.6	200.7	193.7	176.0	201.2	62.8	62.4	62.0	61.4	228.40	30.22	6902.25
2006/11/15	01:00:00	1208.9	904.3	206.1	261.6	221.1	196.7	486.2	960.8	200.5	193.7	176.0	201.2	62.4	62.6	62.6	61.9	229.60	30.27	6949.99

Heat Rise Test
1st Run

Date	Time	TC1	TC2	TC3	TC4	TC5	TC6	TC7	TC8	TC9	TC10	TC11	TC12	TC13	TC14	TC15	TC16	VDC	Amps	Watts
2006/11/15	01:01:00	1208.7	904.6	206.2	260.8	221.5	197.4	485.7	953.6	200.5	193.5	176.0	201.2	62.8	62.1	62.2	61.3	229.50	30.29	6951.56
2006/11/15	01:02:00	1208.3	903.8	206.4	260.7	221.9	197.2	484.9	946.8	200.3	193.7	176.2	201.2	62.6	62.4	63.4	61.3	230.00	30.33	6978.93
2006/11/15	01:03:00	1208.3	905.4	206.4	260.9	221.6	197.2	485.8	947.7	200.5	193.9	176.3	201.3	62.4	61.7	63.2	61.3	229.30	30.26	6938.62
2006/11/15	01:04:00	1208.4	903.7	206.5	259.9	221.6	197.2	485.4	962.2	200.2	193.7	176.3	201.3	62.6	61.2	63.0	61.2	229.70	30.14	6938.23
2006/11/15	01:05:00	1208.7	904.0	206.6	260.9	221.7	196.9	487.0	968.9	200.2	193.4	176.2	201.3	62.6	61.0	62.3	60.4	229.90	30.33	6972.87
2006/11/15	01:06:00	1209.1	903.8	206.5	261.1	221.2	197.5	486.0	984.3	200.2	193.9	176.3	201.5	62.2	61.4	61.8	60.8	229.70	30.29	6957.61
2006/11/15	01:07:00	1208.6	903.5	206.5	260.7	222.2	197.7	486.3	961.0	201.0	193.9	176.3	201.5	62.4	62.4	62.8	61.5	229.10	30.24	6927.98
2006/11/15	01:08:00	1208.4	902.8	206.7	260.4	221.0	197.2	484.9	985.6	200.0	193.7	176.5	201.5	62.6	60.8	62.6	60.4	229.90	30.32	6972.87
2006/11/15	01:09:00	1208.4	901.9	206.7	260.8	221.3	197.5	485.4	965.2	200.0	193.7	176.3	201.5	62.4	61.1	62.6	60.8	230.00	30.33	6975.90
2006/11/15	01:10:00	1207.9	902.1	206.8	261.1	222.0	197.5	486.7	967.1	201.0	193.9	176.3	201.5	62.3	62.1	63.2	61.9	230.00	30.32	6975.90
2006/11/15	01:11:00	1208.4	903.8	206.7	260.3	221.8	197.2	485.7	977.6	200.7	193.9	176.3	201.7	62.2	62.2	62.6	61.4	230.00	30.32	6973.60
2006/11/15	01:12:00	1208.7	904.3	206.9	261.2	222.1	197.2	485.2	980.9	201.2	194.0	176.5	201.7	62.1	63.0	62.4	61.6	229.40	30.27	6943.94
2006/11/15	01:13:00	1208.6	902.5	206.9	261.2	221.9	197.5	487.2	950.6	200.7	194.0	176.5	201.7	62.4	61.7	62.4	61.0	229.90	30.30	6975.06
2006/11/15	01:14:00	1208.4	904.4	206.9	261.8	222.0	197.9	487.0	979.7	200.7	194.2	176.5	201.7	62.4	61.7	62.8	61.0	229.60	30.29	6957.61
2006/11/15	01:15:00	1208.6	903.8	207.0	261.2	222.1	197.7	487.6	984.8	201.0	194.2	176.5	201.8	62.1	61.8	62.8	61.1	230.10	30.32	6979.66
2006/11/15	01:16:00	1209.1	901.9	207.1	260.9	221.0	197.9	485.0	982.6	201.0	194.5	176.5	201.8	62.4	62.6	63.0	61.1	229.60	30.29	6954.58
2006/11/15	01:17:00	1208.6	904.1	207.2	261.2	221.2	197.9	486.2	980.7	201.0	194.5	176.8	202.0	62.3	62.6	63.3	61.1	230.00	30.32	6973.60
2006/11/15	01:18:00	1208.3	905.1	207.2	260.6	222.1	197.9	486.7	929.8	201.7	194.5	176.8	202.0	62.0	62.4	62.4	61.7	229.90	30.31	6973.60
2006/11/15	01:19:00	1208.3	905.6	207.3	260.1	221.5	198.0	486.9	992.8	201.5	194.7	176.8	202.0	62.1	62.6	63.1	62.0	229.90	30.32	6975.17
2006/11/15	01:20:00	1208.4	902.1	207.4	261.3	221.3	197.9	486.5	964.3	202.0	194.7	176.7	202.0	61.8	62.8	62.6	62.0	230.00	30.31	6973.60
2006/11/15	01:21:00	1209.1	901.9	207.4	261.3	221.4	198.0	487.4	980.1	201.3	194.9	176.8	202.2	62.2	61.7	62.8	61.4	229.90	30.32	6972.87
2006/11/15	01:22:00	1209.0	903.4	207.5	261.4	221.9	198.4	486.9	989.4	202.0	195.0	177.0	202.2	63.0	61.4	63.2	61.7	229.90	30.31	6971.30
2006/11/15	01:23:00	1208.6	906.2	207.5	261.6	221.7	198.0	485.8	954.3	201.5	194.5	177.0	202.2	62.8	61.7	62.1	61.8	229.90	30.30	6965.97
2006/11/15	01:24:00	1209.1	903.5	207.7	260.6	221.4	198.4	487.4	999.7	202.0	195.0	177.2	202.3	62.2	62.0	63.3	62.4	229.90	30.33	6975.90
2006/11/15	01:25:00	1209.8	904.3	207.8	260.8	221.3	198.0	487.1	975.8	201.2	194.9	177.0	202.3	62.4	60.4	63.0	60.6	229.50	30.27	6946.97
2006/11/15	01:26:00	1208.7	905.6	207.7	261.4	220.6	197.4	487.4	974.1	200.7	194.9	177.3	202.3	62.1	60.4	62.0	60.4	229.50	30.26	6944.67
2006/11/15	01:27:00	1208.6	905.0	207.8	261.7	220.9	198.4	487.5	1006.3	201.0	194.7	177.0	202.3	62.1	60.4	62.6	60.9	230.10	30.32	6976.63
2006/11/15	01:28:00	1208.7	904.4	207.9	261.7	220.6	197.5	488.1	995.1	200.8	194.7	177.2	202.5	62.6	60.6	62.6	59.8	229.80	30.32	6967.54
2006/11/15	01:29:00	1209.1	904.4	208.0	261.6	221.0	197.9	486.9	1005.2	200.8	194.7	177.2	202.5	62.2	60.2	61.9	60.1	229.90	30.29	6963.67
2006/11/15	01:30:00	1209.0	904.4	208.0	261.2	220.8	198.0	486.9	1025.3	201.3	194.9	177.2	202.5	62.4	61.2	62.6	60.4	229.40	30.29	6950.82
2006/11/15	01:31:00	1209.6	905.0	208.0	260.8	220.8	198.4	487.8	1007.0	200.7	194.7	177.2	202.5	62.6	60.4	62.3	60.4	229.90	30.29	6972.76
2006/11/15	01:32:00	1208.9	903.8	208.1	261.9	220.8	198.7	486.8	1006.0	201.5	195.0	177.3	202.5	61.8	61.0	62.6	60.6	229.90	30.12	6930.61
2006/11/15	01:33:00	1208.6	902.4	208.1	261.4	222.2	198.8	487.4	1001.6	201.7	195.2	177.2	202.5	62.2	61.6	63.2	61.8	229.90	30.26	6965.85
2006/11/15	01:34:00	1209.4	904.1	208.3	261.4	222.7	199.0	487.6	1033.2	202.0	195.0	177.3	202.5	62.6	61.3	63.3	61.7	229.70	30.26	6950.72
2006/11/15	01:35:00	1208.9	904.1	208.3	262.1	222.0	199.0	487.5	973.3	201.8	195.2	177.5	202.7	63.1	60.6	63.3	61.2	229.60	30.32	6961.47
2006/11/15	01:36:00	1208.7	905.9	208.2	261.3	222.0	198.8	488.7	1031.3	201.8	195.0	177.5	202.7	62.1	60.6	63.0	60.6	229.70	30.28	6955.32
2006/11/15	01:37:00	1209.3	906.7	208.4	261.8	222.1	199.0	488.3	1013.2	202.3	195.4	177.5	202.7	61.8	62.2	62.8	61.7	229.80	30.32	6967.54
2006/11/15	01:38:00	1209.1	904.7	208.5	260.9	221.6	198.7	488.0	1025.3	202.2	195.2	177.5	202.7	62.1	62.3	62.1	61.4	229.50	30.32	6958.44
2006/11/15	01:39:00	1209.8	904.4	208.4	261.4	221.7	199.2	488.1	1030.5	202.3	195.5	177.7	202.7	62.6	62.0	63.0	61.8	229.20	30.18	6926.31
2006/11/15	01:40:00	1210.1	904.9	208.5	261.4	222.8	199.3	487.4	1023.8	202.2	195.7	177.5	202.8	62.6	62.0	63.0	61.6	229.10	30.22	6923.40
2006/11/15	01:41:00	1209.4	906.2	208.6	261.8	222.8	199.3	489.0	1000.3	202.7	196.0	177.8	203.0	62.8	62.2	63.6	61.8	229.20	30.15	6924.13
2006/11/15	01:42:00	1209.4	906.1	208.6	261.9	222.7	199.0	488.9	1025.3	203.0	196.0	177.8	203.0	63.1	61.9	62.8	62.0	230.10	30.19	6949.02
2006/11/15	01:43:00	1209.3	905.5	208.7	261.6	222.4	199.2	488.2	997.4	203.0	196.2	177.7	203.0	62.2	62.8	62.4	62.2	229.00	30.23	6922.67
2006/11/15	01:44:00	1209.4	905.6	208.7	262.6	222.3	199.3	489.8	1008.8	202.5	196.0	177.8	203.0	63.1	62.2	62.6	61.8	230.00	30.31	6973.60
2006/11/15	01:45:00	1209.3	908.4	208.8	261.7	222.7	199.5	487.5	1048.0	202.7	196.0	178.0	203.1	62.6	63.1	62.1	61.9	229.90	30.17	6936.08
2006/11/15	01:46:00	1209.7	902.7	208.8	261.1	222.3	199.5	488.0	1023.8	202.5	196.2	178.0	203.1	62.8	62.4	63.3	61.3	229.90	30.32	6970.57
2006/11/15	01:47:00	1209.7	905.1	208.7	261.2	222.5	199.5	489.4	1065.7	202.7	196.2	178.0	203.1	62.8	62.8	62.8	61.2	228.90	30.18	6908.20
2006/11/15	01:48:00	1211.0	903.2	208.9	261.2	222.6	199.3	487.3	1051.0	202.7	196.4	178.2	203.2	62.8	62.1	63.2	61.4	230.10	30.33	6981.23
2006/11/15	01:49:00	1210.1	905.2	208.8	261.9	222.4	199.3	487.1	1056.7	202.5	196.0	178.2	203.2	62.6	62.2	63.1	61.0	229.90	30.32	6970.57
2006/11/15	01:50:00	1209.8	906.2	208.4	262.2	222.1	199.5	489.5	1040.5	202.5	196.0	178.2	203.2	62.4	62.2	62.2	61.0	229.90	30.32	6970.57
2006/11/15	01:51:00	1210.4	904.9	208.9	261.3	221.9	199.3	489.5	1057.5	203.3	196.5	178.2	203.2	62.4	62.8	62.6	62.3	227.90	30.05	6848.40
2006/11/15	01:52:00	1209.9	906.7	209.0	262.6	221.2	199.0	489.5	1033.2	202.2	196.0	178.3	203.3	62.6	61.2	63.0	61.3	230.00	30.33	6975.90
2006/11/15	01:53:00	1209.9	905.8	209.2	262.1	222.1	199.2	487.8	1039.5	202.7	196.0	178.2	203.3	62.0	61.0	62.6	61.1	229.80	30.30	6962.94
2006/11/15	01:54:00	1210.6	905.7	209.1	261.9	221.6	199.5	489.7	1037.0	202.7	196.2	178.2	203.3	62.3	61.0	62.1	61.1	229.90	30.29	6963.67
2006/11/15	01:55:00	1210.1	904.4	209.1	262.4	222.6	199.7	488.9	1043.4	202.2	196.0	178.3	203.5	62.6	61.4	63.2	61.0	230.10	30.34	6981.23
2006/11/15	01:56:00	1210.1	904.6	209.2	262.4	222.2	199.7	489.2	1037.1	202.5	196.2	178.2	203.5	62.6	61.5	62.6	61.0	230.10	30.31	6974.33

Heat Rise Test
1st Run

Date	Time	TC1	TC2	TC3	TC4	TC5	TC6	TC7	TC8	TC9	TC10	TC11	TC12	TC13	TC14	TC15	TC16	VDC	Amps	Watts
2006/11/15	01:57:00	1209.8	902.8	209.4	262.2	223.7	199.7	488.9	1067.5	203.3	196.5	178.3	203.5	62.8	62.8	63.3	61.9	230.10	30.31	6974.33
2006/11/15	01:58:00	1209.9	905.2	209.4	261.7	222.7	199.8	489.4	1056.3	203.0	196.2	178.3	203.5	62.6	61.7	63.0	61.0	230.00	30.32	6973.60
2006/11/15	01:59:00	1209.4	907.1	209.2	262.4	222.5	199.7	487.9	1054.7	202.7	196.2	178.3	203.5	62.8	61.6	63.0	60.9	230.00	30.33	6975.90
2006/11/15	02:00:00	1210.1	902.4	209.3	262.2	222.5	199.7	490.0	1067.9	202.7	196.2	178.3	203.6	63.3	61.8	63.3	61.1	229.90	30.19	6940.68
2006/11/15	02:01:00	1210.0	907.0	209.5	262.2	222.8	200.2	489.0	1047.4	203.5	196.7	178.5	203.6	62.0	62.2	63.3	61.6	229.10	30.25	6930.28
2006/11/15	02:02:00	1209.9	906.5	209.7	262.9	223.3	200.0	488.9	1047.1	203.2	196.7	178.7	203.6	62.0	61.8	62.6	61.2	230.10	30.33	6978.93
2006/11/15	02:03:00	1210.1	904.4	209.8	262.7	223.7	200.2	490.0	1056.0	203.3	196.5	178.7	203.7	62.6	61.8	62.8	60.8	230.10	30.33	6981.23
2006/11/15	02:04:00	1210.2	906.4	209.7	262.4	222.7	200.2	488.9	1061.1	203.5	196.5	178.7	203.7	62.3	61.9	63.3	61.2	230.10	30.34	6981.23
2006/11/15	02:05:00	1210.2	906.6	210.0	262.2	222.5	200.2	489.4	1062.7	203.5	196.5	178.7	203.8	63.2	62.1	63.5	61.3	230.10	30.34	6981.23
2006/11/15	02:06:00	1210.0	904.6	209.8	263.4	223.1	200.2	489.7	1074.4	203.7	196.7	178.7	203.8	62.8	62.8	63.1	61.2	230.10	30.33	6981.23
2006/11/15	02:07:00	1209.4	905.1	209.8	262.2	223.5	200.0	488.2	1074.4	203.6	196.7	178.8	203.8	62.8	62.6	62.6	61.7	230.10	30.33	6981.23
2006/11/15	02:08:00	1209.9	903.8	209.9	262.6	223.3	200.2	489.5	1059.3	203.8	196.9	178.8	204.0	62.8	62.3	63.2	62.0	230.20	30.34	6984.27
2006/11/15	02:09:00	1209.9	905.0	210.1	262.2	223.6	200.3	488.6	1062.5	204.0	196.9	178.8	204.0	62.6	62.6	63.5	61.8	229.80	30.30	6962.94
2006/11/15	02:10:00	1209.1	905.4	210.1	262.7	223.6	200.3	490.1	1060.5	203.8	197.2	179.0	204.0	63.0	62.4	62.8	61.9	230.10	30.34	6983.54
2006/11/15	02:11:00	1209.3	905.6	210.1	262.9	223.5	200.5	490.2	1048.5	204.0	197.2	179.0	204.0	62.6	62.6	62.6	61.8	230.10	30.34	6981.23
2006/11/15	02:12:00	1209.8	905.0	210.0	262.9	223.5	200.5	489.0	1048.8	203.8	197.0	179.0	204.1	62.8	62.3	62.6	61.9	230.20	30.34	6984.27
2006/11/15	02:13:00	1209.7	905.6	210.2	262.7	223.7	200.5	489.0	1049.8	204.5	197.2	179.2	204.1	62.6	61.8	62.8	62.1	230.20	30.34	6984.27
2006/11/15	02:14:00	1210.1	901.9	210.4	262.4	223.7	200.7	489.0	1078.9	204.1	197.0	179.2	204.1	63.1	61.3	63.4	61.6	230.10	30.34	6983.54
2006/11/15	02:15:00	1211.1	902.9	210.4	262.7	223.6	200.5	490.1	1078.2	204.3	197.2	179.4	204.2	63.3	61.3	63.4	61.6	230.10	30.34	6981.23
2006/11/15	02:16:00	1209.0	908.2	210.4	262.4	223.4	200.8	490.0	1056.5	203.8	197.4	179.4	204.2	63.4	61.6	62.6	61.5	230.20	30.34	6984.27
2006/11/15	02:17:00	1209.0	908.7	210.4	263.4	223.7	200.8	488.4	1087.4	204.1	197.4	179.2	204.2	63.1	62.3	63.3	61.8	230.00	30.33	6975.90
2006/11/15	02:18:00	1210.4	906.2	210.6	263.5	223.4	200.8	490.5	1080.8	204.6	197.7	179.2	204.3	63.1	63.2	62.8	62.8	230.00	30.33	6975.90
2006/11/15	02:19:00	1210.0	906.2	210.4	263.4	223.0	200.7	490.7	1058.9	203.6	197.5	179.2	204.3	63.4	60.9	62.8	61.3	230.00	30.34	6978.20
2006/11/15	02:20:00	1210.6	905.9	210.5	262.2	222.5	200.3	489.0	1092.4	203.5	197.4	179.5	204.5	62.8	60.8	63.0	61.3	230.10	30.33	6978.93
2006/11/15	02:21:00	1210.4	902.8	210.7	262.7	223.2	200.2	489.5	1100.8	203.7	197.4	179.5	204.5	63.1	60.6	63.0	61.2	230.00	30.33	6975.90
2006/11/15	02:22:00	1210.0	905.8	210.7	262.4	222.7	200.7	490.1	1082.4	203.6	197.5	179.5	204.5	62.6	61.5	62.8	61.1	230.10	30.34	6981.23
2006/11/15	02:23:00	1210.2	905.9	210.7	262.9	223.0	200.5	490.3	1082.7	203.6	197.4	179.5	204.5	63.0	61.2	63.3	61.3	230.10	30.34	6981.23
2006/11/15	02:24:00	1210.4	904.9	211.0	263.0	223.5	200.2	491.2	1087.9	204.0	197.4	179.5	204.6	62.8	61.0	63.0	61.6	230.10	30.34	6981.23
2006/11/15	02:25:00	1210.2	907.0	211.0	263.0	222.9	200.7	490.1	1082.4	204.0	197.2	179.5	204.7	63.0	61.2	63.0	61.1	230.10	30.34	6981.23
2006/11/15	02:26:00	1210.7	905.1	211.2	263.5	223.1	201.0	489.7	1086.5	204.5	197.5	179.7	204.7	62.6	61.0	63.1	61.2	230.10	30.33	6978.93
2006/11/15	02:27:00	1211.0	906.5	211.2	263.0	223.3	200.7	488.4	1088.8	204.1	197.5	179.7	204.7	63.2	60.6	63.2	61.6	230.20	30.34	6984.27
2006/11/15	02:28:00	1211.2	907.1	210.9	261.8	223.5	201.0	491.1	1108.5	204.2	197.5	179.7	204.7	63.0	60.8	63.2	61.4	230.20	30.34	6984.27
2006/11/15	02:29:00	1210.5	907.1	211.1	262.9	223.3	201.0	491.6	1074.7	204.1	197.5	179.7	204.7	62.8	60.8	63.3	61.4	230.10	30.34	6981.23
2006/11/15	02:30:00	1210.5	904.4	211.3	263.0	223.1	200.8	490.5	1089.3	204.0	197.5	179.7	204.8	62.6	62.0	63.1	61.2	230.00	30.32	6973.60
2006/11/15	02:31:00	1210.8	908.9	211.4	263.4	223.3	201.2	490.8	1091.4	204.3	197.5	179.7	204.8	62.3	62.3	63.1	61.2	230.10	30.34	6981.23
2006/11/15	02:32:00	1210.5	905.9	211.5	263.4	223.3	201.0	490.9	1082.2	204.1	197.7	179.7	204.8	62.6	61.1	63.2	61.1	230.20	30.34	6984.27
2006/11/15	02:33:00	1211.1	904.6	211.6	262.9	222.6	201.0	489.7	1101.7	204.5	198.0	179.9	205.0	63.0	61.3	63.2	61.7	230.00	30.33	6975.90
2006/11/15	02:34:00	1210.4	904.7	211.3	263.4	223.0	201.5	490.8	1092.7	204.3	198.0	179.9	205.0	63.0	62.3	63.2	61.5	230.20	30.34	6984.27
2006/11/15	02:35:00	1210.5	903.8	211.6	262.7	223.8	201.3	491.0	1088.7	204.2	197.7	179.9	205.0	63.0	61.4	63.4	61.5	230.10	30.34	6983.54
2006/11/15	02:36:00	1210.4	907.7	211.7	262.9	223.6	201.5	491.1	1107.6	204.2	197.9	180.0	205.0	62.8	61.6	63.2	61.4	230.20	30.35	6986.57
2006/11/15	02:37:00	1210.6	903.7	211.8	262.7	223.8	201.7	489.5	1094.7	204.8	197.7	179.9	205.0	63.1	61.2	63.3	61.6	230.20	30.34	6984.27
2006/11/15	02:38:00	1210.4	905.8	211.6	263.8	223.6	201.2	491.8	1103.2	204.2	197.9	180.0	205.0	62.8	61.4	63.5	61.4	230.20	30.34	6984.27
2006/11/15	02:39:00	1210.2	905.1	211.5	263.8	223.7	201.2	492.2	1105.5	204.0	197.7	180.0	205.1	62.6	61.8	63.1	61.3	230.20	30.34	6984.27
2006/11/15	02:40:00	1210.5	907.4	211.8	263.2	223.3	201.5	490.7	1106.1	204.5	197.9	180.0	205.1	62.6	61.6	63.2	61.5	230.20	30.34	6984.27
2006/11/15	02:41:00	1210.5	908.2	211.9	263.7	223.7	201.5	492.6	1087.9	204.1	197.9	180.0	205.1	62.8	61.4	63.3	61.2	230.10	30.34	6983.54
2006/11/15	02:42:00	1211.5	900.1	211.9	263.8	223.1	202.0	490.9	1102.7	204.3	197.5	180.0	205.2	63.0	61.1	63.2	61.3	230.20	30.34	6984.27
2006/11/15	02:43:00	1211.0	906.5	211.9	263.2	223.8	201.7	491.7	1101.2	204.7	198.2	180.2	205.2	62.6	61.0	62.8	61.2	230.10	30.34	6983.54
2006/11/15	02:44:00	1210.4	909.3	212.1	263.9	224.0	202.2	492.7	1104.0	205.0	198.5	180.2	205.3	62.8	61.2	63.2	61.9	230.20	30.34	6984.27
2006/11/15	02:45:00	1210.2	906.4	212.1	263.7	223.4	202.0	492.6	1103.2	204.8	198.4	180.2	205.5	63.0	61.2	63.3	61.4	230.20	30.34	6984.27
2006/11/15	02:46:00	1211.0	908.9	211.9	263.7	223.9	202.0	491.8	1092.7	204.5	198.2	180.2	205.5	63.1	61.1	63.3	61.3	230.10	30.34	6981.23
2006/11/15	02:47:00	1210.9	906.6	212.1	263.4	224.0	201.7	491.6	1086.7	204.5	198.2	180.4	205.5	62.6	60.9	63.1	61.3	230.20	30.35	6986.57
2006/11/15	02:48:00	1211.3	904.6	212.3	263.9	223.6	202.2	492.5	1102.9	204.5	198.2	180.2	205.5	63.2	61.5	63.5	61.7	230.20	30.34	6984.27
2006/11/15	02:49:00	1211.1	908.1	212.4	263.4	223.9	202.0	492.0	1102.1	205.0	198.5	180.4	205.5	62.8	62.1	63.4	61.7	230.10	30.34	6981.23
2006/11/15	02:50:00	1211.1	908.4	212.4	263.0	223.6	202.0	492.4	1104.0	205.0	198.5	180.5	205.6	62.8	62.8	63.4	61.6	230.10	30.34	6981.23
2006/11/15	02:51:00	1211.1	906.6	212.5	263.7	223.3	202.5	491.0	1112.5	205.0	198.5	180.5	205.7	63.2	63.1	63.6	62.0	230.10	30.31	6974.33
2006/11/15	02:52:00	1211.1	907.9	212.4	263.7	224.2	202.2	492.5	1115.6	204.8	198.5	180.7	205.7	63.2	61.5	63.5	61.7	230.20	30.35	6986.57

Heat Rise Test
1st Run

Date	Time	TC1	TC2	TC3	TC4	TC5	TC6	TC7	TC8	TC9	TC10	TC11	TC12	TC13	TC14	TC15	TC16	VDC	Amps	Watts
2006/11/15	02:53:00	1211.4	905.4	212.6	262.9	224.2	202.2	491.8	1122.8	205.2	198.5	180.7	205.7	63.3	61.3	63.4	61.8	230.20	30.34	6984.27
2006/11/15	02:54:00	1211.3	908.4	212.4	263.7	224.4	202.2	491.0	1114.0	205.0	198.7	180.7	205.7	63.0	60.8	63.7	61.4	230.20	30.35	6986.57
2006/11/15	02:55:00	1210.6	905.6	212.7	263.9	223.9	202.0	491.3	1104.9	205.2	198.5	180.7	205.8	63.3	61.1	63.6	61.5	230.20	30.35	6986.57
2006/11/15	02:56:00	1210.6	910.1	212.7	263.7	224.5	202.5	491.5	1127.1	205.2	198.5	180.7	205.8	63.0	61.4	63.5	61.6	230.10	30.34	6981.23
2006/11/15	02:57:00	1210.7	909.3	212.7	264.2	224.1	202.7	492.4	1107.1	205.0	198.7	180.7	205.7	63.4	61.1	63.6	61.8	230.20	30.34	6984.27
2006/11/15	02:58:00	1211.4	908.1	212.8	263.5	224.1	202.3	491.9	1131.3	204.8	198.7	180.7	205.8	62.8	61.2	63.2	61.4	230.20	30.34	6984.27
2006/11/15	02:59:00	1211.7	907.6	212.8	264.0	223.6	202.7	491.5	1125.5	205.1	198.7	180.7	205.8	62.8	61.1	63.3	61.3	230.10	30.34	6981.23
2006/11/15	03:00:00	1211.4	908.5	212.9	264.0	223.9	202.5	490.9	1114.9	205.5	198.7	180.9	205.8	63.1	62.2	63.2	61.5	230.10	30.34	6981.23
2006/11/15	03:01:00	1211.7	907.0	212.8	263.7	224.4	202.7	491.9	1134.4	205.5	198.7	180.7	206.0	63.1	61.0	63.2	61.4	230.20	30.34	6984.27
2006/11/15	03:02:00	1211.5	905.9	213.0	264.3	224.3	202.5	492.7	1146.6	205.2	198.7	180.9	206.0	63.2	61.9	63.5	61.4	230.00	30.33	6975.90
2006/11/15	03:03:00	1211.0	908.6	213.0	265.0	224.2	202.7	491.7	1120.1	205.5	199.0	181.0	206.0	63.4	61.8	63.6	61.8	230.20	30.34	6984.27
2006/11/15	03:04:00	1210.4	906.9	212.9	263.8	224.7	202.7	492.9	1128.9	205.3	198.7	181.0	206.0	63.2	61.3	63.4	61.6	230.10	30.34	6983.54
2006/11/15	03:05:00	1210.1	905.7	213.1	263.9	224.4	202.7	492.9	1134.2	205.5	198.7	181.0	206.0	63.4	61.8	63.3	61.7	230.20	30.34	6984.27
2006/11/15	03:06:00	1211.1	908.1	213.1	264.2	224.1	202.8	493.7	1138.1	205.3	198.7	181.0	206.0	63.0	61.5	63.3	61.7	230.10	30.34	6981.23
2006/11/15	03:07:00	1209.9	908.1	213.1	264.7	224.1	202.8	493.2	1110.2	205.3	198.7	181.2	206.1	62.6	62.4	63.6	61.7	230.20	30.34	6984.27
2006/11/15	03:08:00	1210.7	907.9	213.2	264.3	223.7	202.5	491.7	1138.4	205.2	198.5	181.2	206.0	63.3	61.2	63.3	61.9	230.10	30.34	6981.23
2006/11/15	03:09:00	1210.5	907.1	213.2	263.9	224.3	202.8	492.9	1138.4	205.6	198.7	181.2	206.0	63.6	61.1	63.6	61.7	230.20	30.34	6984.27
2006/11/15	03:10:00	1211.7	909.8	213.2	264.2	224.4	203.1	493.2	1131.5	205.5	199.0	181.4	206.1	63.1	61.3	63.2	61.5	230.10	30.33	6978.93
2006/11/15	03:11:00	1210.9	906.6	213.5	264.0	224.3	203.5	493.2	1143.7	205.7	199.0	181.2	206.2	63.1	61.9	63.5	61.7	230.10	30.33	6978.93
2006/11/15	03:12:00	1211.0	904.6	213.5	264.9	224.4	203.2	492.4	1156.9	205.5	199.0	181.2	206.3	63.2	63.4	63.3	61.5	230.20	30.34	6984.27
2006/11/15	03:13:00	1211.4	907.4	213.7	264.5	224.7	203.3	492.6	1138.0	205.5	199.2	181.5	206.4	62.8	61.9	63.5	61.5	230.20	30.34	6984.27
2006/11/15	03:14:00	1212.0	908.4	213.6	264.2	225.0	203.1	492.6	1149.1	205.7	199.2	181.5	206.3	63.2	62.2	63.4	61.4	230.20	30.34	6984.27
2006/11/15	03:15:00	1211.6	907.1	213.6	264.5	224.3	202.8	493.0	1141.6	205.6	199.2	181.5	206.4	63.0	61.3	63.3	61.5	230.20	30.34	6984.27
2006/11/15	03:16:00	1211.7	906.0	213.6	264.6	225.0	203.3	493.0	1118.1	205.8	199.2	181.5	206.4	63.5	61.2	63.4	61.6	230.10	30.34	6983.54
2006/11/15	03:17:00	1211.4	907.7	213.6	265.0	224.9	203.3	492.7	1145.1	205.6	199.0	181.5	206.5	63.1	61.9	63.6	61.6	230.10	30.33	6978.93
2006/11/15	03:18:00	1211.2	907.4	213.7	264.2	224.4	203.6	494.4	1126.9	206.0	199.5	181.5	206.5	63.2	62.6	63.5	61.8	230.10	30.34	6981.23
2006/11/15	03:19:00	1211.2	907.4	213.7	264.7	224.4	204.0	492.7	1137.4	206.0	199.5	181.5	206.5	63.2	61.6	63.3	61.7	230.20	30.34	6984.27
2006/11/15	03:20:00	1211.6	905.7	213.9	263.7	224.8	203.7	493.2	1141.4	206.0	199.5	181.5	206.5	63.0	61.0	63.1	61.8	230.20	30.33	6981.97
2006/11/15	03:21:00	1212.2	906.4	213.7	263.5	224.5	203.5	494.0	1158.8	205.5	199.5	181.7	206.6	63.4	61.0	63.4	61.6	230.20	30.34	6984.27
2006/11/15	03:22:00	1211.1	908.6	213.9	264.7	225.0	203.6	493.8	1119.3	206.0	199.5	181.7	206.6	63.6	61.2	63.8	62.0	230.10	30.34	6981.23
2006/11/15	03:23:00	1211.3	903.4	214.1	264.7	224.6	204.0	494.1	1114.7	206.1	199.5	181.7	206.7	63.0	61.5	63.7	61.4	230.20	30.34	6984.27
2006/11/15	03:24:00	1211.6	910.4	214.2	265.9	224.9	203.6	493.0	1117.4	206.0	199.7	181.9	206.7	62.6	63.5	63.3	61.4	230.10	30.34	6983.54
2006/11/15	03:25:00	1211.5	911.5	214.2	265.9	224.7	204.0	493.8	1156.0	206.0	199.8	181.9	206.8	63.4	63.0	63.5	61.5	230.20	30.34	6984.27
2006/11/15	03:26:00	1211.2	910.4	214.4	265.5	224.8	204.2	494.2	1136.5	206.4	199.8	181.9	206.8	62.8	62.0	63.6	61.7	230.20	30.34	6984.27
2006/11/15	03:27:00	1210.6	908.6	214.4	265.0	224.9	204.3	494.3	1121.5	206.7	200.2	181.9	206.8	63.1	61.7	63.6	61.9	230.20	30.34	6984.27
2006/11/15	03:28:00	1211.0	908.2	214.5	265.2	225.7	204.3	495.1	1150.4	206.8	199.8	181.7	206.8	63.5	61.4	63.9	62.1	230.00	30.32	6973.60
2006/11/15	03:29:00	1210.9	909.3	214.2	265.3	225.5	204.0	493.8	1146.2	206.4	199.7	181.9	206.9	63.5	61.2	63.6	61.8	230.20	30.34	6984.27
2006/11/15	03:30:00	1211.4	907.9	214.4	265.7	225.2	204.0	493.3	1146.2	206.2	200.0	182.0	206.9	63.5	61.5	64.0	61.7	230.20	30.35	6986.57
2006/11/15	03:31:00	1211.4	907.7	214.4	265.2	225.2	204.3	494.6	1131.4	206.2	200.0	182.0	206.8	63.2	61.4	63.6	61.8	230.10	30.34	6981.23
2006/11/15	03:32:00	1211.9	910.4	214.5	265.1	225.7	203.7	491.2	1138.1	206.5	199.8	182.0	206.9	63.2	61.0	63.5	62.0	230.00	30.34	6978.20
2006/11/15	03:33:00	1211.5	905.7	214.5	265.2	225.5	204.0	494.3	1134.8	206.5	199.7	181.9	206.9	63.4	61.5	63.8	61.8	230.20	30.34	6984.27
2006/11/15	03:34:00	1211.5	907.6	214.6	264.5	224.8	204.3	494.4	1159.0	206.4	200.0	182.0	207.0	63.1	62.1	63.7	61.6	230.20	30.34	6984.27
2006/11/15	03:35:00	1212.1	910.9	214.6	265.5	225.0	204.3	494.6	1124.4	206.7	200.2	182.2	207.0	63.0	61.1	63.6	61.6	230.20	30.34	6984.27
2006/11/15	03:36:00	1211.7	907.6	214.7	265.5	225.9	204.1	496.1	1148.2	206.5	200.0	182.2	207.1	63.3	61.6	63.6	61.6	230.20	30.34	6984.27
2006/11/15	03:37:00	1212.1	907.9	214.9	265.3	225.2	204.5	495.5	1164.7	206.7	200.2	182.2	207.1	63.3	61.0	63.8	61.7	230.20	30.34	6984.27
2006/11/15	03:38:00	1212.1	905.2	214.9	266.7	224.8	203.8	494.8	1133.8	206.7	200.0	182.4	207.2	63.2	61.7	63.5	61.7	230.20	30.34	6984.27
2006/11/15	03:39:00	1211.4	908.7	214.7	266.5	225.7	204.2	494.3	1149.2	206.8	200.2	182.4	207.2	63.1	61.7	63.7	61.4	230.10	30.34	6981.23
2006/11/15	03:40:00	1211.4	911.2	215.0	265.7	225.7	204.5	496.1	1160.1	207.1	200.2	182.4	207.2	63.6	61.0	63.8	61.7	230.20	30.34	6984.27
2006/11/15	03:41:00	1211.5	908.8	214.7	265.6	225.1	204.6	495.3	1138.6	206.6	200.0	182.5	207.2	63.5	60.9	63.8	61.8	230.10	30.33	6978.93
2006/11/15	03:42:00	1211.7	909.2	215.0	265.5	225.2	204.5	494.0	1163.8	206.8	200.2	182.5	207.3	64.0	61.0	63.5	61.9	230.00	30.33	6975.90
2006/11/15	03:43:00	1211.7	908.1	215.0	264.5	225.5	204.6	494.8	1159.8	206.8	200.2	182.5	207.3	62.8	61.4	63.6	61.6	230.20	30.34	6984.27
2006/11/15	03:44:00	1211.4	909.7	214.9	266.2	225.2	204.8	494.3	1065.8	206.8	200.2	182.5	207.3	63.1	61.3	64.0	61.5	230.10	30.33	6978.93
2006/11/15	03:45:00	1211.8	909.0	215.1	264.6	225.5	205.0	495.0	1032.8	206.7	200.3	182.5	207.4	63.4	61.2	63.9	61.6	230.10	30.33	6978.93
2006/11/15	03:46:00	1212.0	908.1	215.1	265.8	225.7	204.8	495.0	1009.6	207.1	200.2	182.5	207.4	63.3	61.0	63.6	62.1	230.10	30.33	6978.93
2006/11/15	03:47:00	1212.1	907.1	215.2	265.7	225.7	205.0	494.5	1008.9	207.1	200.5	182.5	207.4	63.3	61.2	63.4	61.7	230.20	30.34	6984.27
2006/11/15	03:48:00	1213.3	908.4	215.2	265.4	224.6	205.0	492.5	1006.2	207.0	200.2	182.5	207.5	63.1	61.1	63.7	61.7	230.20	30.34	6984.27

Heat Rise Test
1st Run

Date	Time	TC1	TC2	TC3	TC4	TC5	TC6	TC7	TC8	TC9	TC10	TC11	TC12	TC13	TC14	TC15	TC16	VDC	Amps	Watts
2006/11/15	03:49:00	1212.6	909.6	215.1	265.7	225.4	204.7	494.6	1021.0	207.3	200.2	182.5	207.5	63.4	61.1	63.7	61.9	230.20	30.34	6984.27
2006/11/15	03:50:00	1212.6	906.3	215.2	264.9	225.7	205.1	495.3	994.8	206.9	200.2	182.5	207.5	63.1	61.3	63.6	61.6	230.20	30.34	6984.27
2006/11/15	03:51:00	1212.6	907.4	215.1	265.4	225.5	204.6	494.0	1003.6	207.1	200.2	182.5	207.5	63.2	61.3	63.5	61.6	230.00	30.32	6973.60
2006/11/15	03:52:00	1213.0	908.5	215.4	265.3	225.9	205.0	495.2	990.5	206.9	200.3	182.7	207.5	63.2	61.1	63.4	61.6	230.10	30.34	6981.23
2006/11/15	03:53:00	1212.9	909.5	215.5	265.1	225.4	205.0	495.4	1001.6	207.0	200.3	182.7	207.6	63.4	60.9	64.0	61.5	230.10	30.33	6978.93
2006/11/15	03:54:00	1211.9	909.7	215.5	266.0	225.4	205.1	496.4	1001.8	207.3	200.5	182.9	207.7	62.8	62.3	63.7	61.6	230.20	30.34	6984.27
2006/11/15	03:55:00	1211.9	908.9	215.7	265.9	225.7	205.1	495.8	994.8	207.5	200.7	182.9	207.7	63.5	61.9	63.8	61.7	230.20	30.34	6984.27
2006/11/15	03:56:00	1212.3	909.3	215.5	266.7	225.2	205.1	496.2	1004.8	207.0	200.7	183.0	207.7	63.3	62.0	63.2	61.4	230.20	30.33	6981.97
2006/11/15	03:57:00	1212.1	909.3	215.7	265.8	225.7	205.1	496.5	1012.0	207.6	200.7	182.9	207.7	63.3	61.6	63.1	61.6	230.20	30.34	6984.27
2006/11/15	03:58:00	1212.6	908.1	215.7	265.6	226.4	205.1	494.4	1029.5	207.1	200.8	182.9	207.8	63.4	61.7	63.7	61.7	230.20	30.34	6984.27
2006/11/15	03:59:00	1212.9	906.9	215.7	266.0	226.4	205.6	497.7	1026.1	207.3	200.8	183.0	207.8	63.4	63.4	63.7	61.7	230.10	30.34	6981.23
2006/11/15	04:00:00	1212.6	908.7	216.0	265.3	225.7	205.2	495.4	1012.9	207.8	201.0	183.0	207.8	63.1	61.9	63.5	61.8	230.20	30.34	6984.27
2006/11/15	04:01:00	1212.6	910.0	215.9	265.3	225.2	205.6	495.2	1016.0	207.4	200.8	183.0	207.8	63.5	61.3	63.9	61.7	230.20	30.34	6984.27
2006/11/15	04:02:00	1212.9	911.1	215.9	265.8	225.5	205.7	495.0	1009.7	207.5	200.8	183.2	207.9	63.4	61.3	64.0	61.7	230.20	30.34	6984.27
2006/11/15	04:03:00	1213.3	908.7	216.0	265.4	226.1	205.3	494.0	1025.1	207.8	201.0	183.0	207.8	63.4	61.1	63.8	62.2	230.20	30.34	6984.27
2006/11/15	04:04:00	1213.3	910.4	215.7	265.8	226.2	205.6	496.5	1044.4	207.3	201.0	183.2	207.8	63.2	61.0	63.8	61.7	230.10	30.33	6978.93
2006/11/15	04:05:00	1212.6	911.2	216.0	265.5	226.0	205.5	496.5	1029.8	207.3	201.0	183.2	207.9	63.2	61.2	63.5	61.8	230.20	30.34	6984.27
2006/11/15	04:06:00	1212.4	910.9	216.0	265.4	226.0	205.8	496.2	1040.2	207.9	200.7	183.2	207.9	63.2	61.2	63.7	61.8	230.10	30.34	6981.23
2006/11/15	04:07:00	1212.1	910.9	216.0	266.5	226.1	205.6	496.2	1042.1	207.6	200.8	183.2	208.0	63.1	61.1	63.6	61.7	230.20	30.34	6984.27
2006/11/15	04:08:00	1212.1	907.4	216.2	265.8	225.7	205.5	496.5	1030.3	207.7	201.0	183.2	208.0	63.4	61.2	63.7	61.8	230.20	30.34	6984.27
2006/11/15	04:09:00	1212.4	908.1	216.2	266.1	225.6	205.5	496.9	1033.8	208.2	201.0	183.2	208.1	63.7	61.1	63.6	62.0	230.20	30.34	6984.27
2006/11/15	04:10:00	1212.6	908.4	216.4	266.2	226.4	206.0	496.5	1032.7	207.6	201.3	183.4	208.2	63.4	61.6	63.7	62.2	230.20	30.34	6984.27
2006/11/15	04:11:00	1212.6	909.4	216.2	266.0	225.9	206.0	497.0	1036.8	208.1	201.3	183.5	208.2	63.5	61.8	63.7	61.9	230.10	30.34	6981.23
2006/11/15	04:12:00	1211.6	908.9	216.5	266.0	226.1	206.0	496.5	1027.5	208.0	201.3	183.5	208.2	63.3	61.5	63.6	61.8	230.20	30.34	6984.27
2006/11/15	04:13:00	1211.9	910.4	216.4	264.7	226.2	206.0	495.9	1050.7	207.5	201.0	183.5	208.3	63.3	61.6	63.5	61.7	230.10	30.34	6981.23
2006/11/15	04:14:00	1213.4	907.1	216.5	266.1	226.1	205.8	496.1	1055.9	207.3	201.2	183.5	208.3	63.1	62.2	63.3	61.7	230.10	30.33	6978.93
2006/11/15	04:15:00	1213.2	906.6	216.5	265.8	226.0	205.5	496.2	1058.6	208.0	201.5	183.5	208.4	63.1	61.7	63.7	61.8	230.10	30.33	6978.93
2006/11/15	04:16:00	1213.0	909.0	216.5	266.4	226.7	206.0	496.5	1070.2	207.9	201.3	183.5	208.4	63.4	61.5	63.6	61.9	230.20	30.34	6984.27
2006/11/15	04:17:00	1212.5	910.1	216.5	265.8	226.0	206.2	496.1	1060.8	208.1	201.5	183.7	208.5	63.7	63.2	63.6	61.7	230.10	30.33	6978.93
2006/11/15	04:18:00	1212.8	909.5	216.7	265.8	226.4	206.3	497.3	1066.1	208.4	201.7	183.5	208.4	63.4	62.3	63.7	62.2	230.10	30.33	6978.93
2006/11/15	04:19:00	1213.1	909.6	216.7	266.1	226.5	206.2	497.0	1083.1	208.4	201.7	183.7	208.4	63.6	61.9	63.3	62.2	230.00	30.33	6975.90
2006/11/15	04:20:00	1213.4	909.0	216.7	265.2	226.7	206.4	496.9	1061.0	208.4	201.7	183.9	208.5	63.5	62.8	64.0	62.0	230.20	30.34	6984.27
2006/11/15	04:21:00	1213.4	910.7	216.9	266.2	226.0	206.4	496.2	1061.2	208.4	201.7	184.0	208.6	63.6	62.2	63.9	62.0	230.20	30.34	6984.27
2006/11/15	04:22:00	1213.0	909.0	216.7	266.6	226.7	206.3	498.2	1071.8	208.6	201.8	184.0	208.6	63.2	62.1	63.6	61.9	230.20	30.34	6984.27
2006/11/15	04:23:00	1212.6	909.5	216.7	266.4	226.7	206.2	495.4	1060.5	208.4	201.7	183.9	208.6	63.3	61.6	63.9	61.9	230.20	30.33	6981.97
2006/11/15	04:24:00	1212.8	907.6	217.0	266.5	226.7	206.2	496.4	1077.1	208.4	201.7	184.0	208.6	63.3	61.5	63.7	61.7	230.20	30.34	6984.27
2006/11/15	04:25:00	1212.4	907.1	217.0	266.8	226.5	206.4	497.9	1054.7	208.6	201.8	184.0	208.7	63.5	61.1	63.8	62.3	230.20	30.34	6984.27
2006/11/15	04:26:00	1212.6	907.1	217.0	266.0	226.4	206.4	496.9	1089.7	208.5	201.7	184.0	208.8	63.4	61.1	63.7	62.1	230.20	30.34	6984.27
2006/11/15	04:27:00	1212.4	907.1	217.2	266.3	226.5	206.6	496.9	1075.0	208.8	201.8	184.0	208.7	63.5	61.6	63.7	62.0	230.20	30.34	6984.27
2006/11/15	04:28:00	1213.0	908.7	217.2	265.9	226.0	206.6	496.7	1090.2	208.4	202.0	184.0	208.8	63.1	61.9	63.5	61.8	230.20	30.34	6984.27
2006/11/15	04:29:00	1213.0	910.0	217.2	264.9	226.2	206.5	496.9	1077.6	207.6	201.8	184.0	208.8	63.4	62.1	63.8	61.9	230.20	30.34	6984.27
2006/11/15	04:30:00	1213.7	912.3	217.0	265.6	226.4	207.0	496.7	1086.4	208.5	201.7	184.0	208.8	63.6	65.0	63.7	62.0	230.10	30.34	6981.23
2006/11/15	04:31:00	1213.2	909.4	217.3	266.7	226.1	206.7	497.5	1092.4	208.4	202.2	184.2	208.9	63.8	64.2	63.7	62.2	230.20	30.34	6984.27
2006/11/15	04:32:00	1213.6	910.1	217.3	266.6	226.2	206.6	496.7	1116.3	208.5	202.0	184.2	208.9	63.5	63.0	63.7	62.2	230.20	30.34	6984.27
2006/11/15	04:33:00	1213.3	909.7	217.3	267.0	226.7	206.7	497.5	1103.0	208.4	202.2	184.4	208.9	63.5	63.0	63.5	61.8	230.20	30.34	6984.27
2006/11/15	04:34:00	1212.8	910.6	217.2	266.8	226.4	206.9	498.3	1086.2	208.7	202.0	184.4	209.0	63.2	62.3	63.5	61.6	230.10	30.34	6981.23
2006/11/15	04:35:00	1213.2	909.5	217.5	266.5	226.7	206.9	497.0	1081.2	208.9	202.0	184.2	209.0	63.3	63.1	63.7	61.9	230.20	30.34	6984.27
2006/11/15	04:36:00	1213.5	910.3	217.7	265.6	226.7	207.1	497.9	1113.0	209.0	202.5	184.5	209.0	62.6	62.2	63.7	62.0	230.20	30.34	6984.27
2006/11/15	04:37:00	1213.2	908.7	217.7	266.8	226.7	207.0	496.5	1104.2	208.6	202.3	184.5	209.1	63.4	62.8	64.0	62.0	230.20	30.34	6984.27
2006/11/15	04:38:00	1214.1	910.3	217.8	266.8	226.1	207.2	498.0	1105.2	209.3	202.5	184.5	209.2	63.2	62.4	63.7	62.1	230.10	30.34	6981.23
2006/11/15	04:39:00	1213.0	910.4	217.8	266.6	227.2	206.9	496.9	1109.0	209.2	202.5	184.7	209.2	63.6	62.1	63.8	62.0	230.20	30.34	6984.27
2006/11/15	04:40:00	1213.3	910.6	218.0	265.6	227.2	207.3	497.2	1114.2	209.1	202.7	184.7	209.3	63.4	61.8	64.1	62.1	230.20	30.34	6984.27
2006/11/15	04:41:00	1212.6	909.8	217.7	266.8	226.7	206.9	496.7	1071.9	208.8	202.7	184.7	209.3	63.4	61.3	63.5	62.1	230.20	30.34	6984.27
2006/11/15	04:42:00	1212.6	909.6	217.8	266.9	227.0	207.4	499.0	1107.4	208.9	202.7	184.7	209.3	63.3	61.7	63.9	62.1	230.10	30.33	6978.93
2006/11/15	04:43:00	1212.9	909.9	218.0	266.9	226.9	207.3	498.2	1097.3	209.4	202.7	184.7	209.3	64.1	61.4	64.2	62.6	229.90	30.29	6963.67
2006/11/15	04:44:00	1213.1	909.1	218.0	266.1	227.2	207.0	497.8	1109.0	209.5	202.5	184.5	209.3	64.0	61.5	64.2	62.6	230.20	30.34	6984.27

Heat Rise Test
1st Run

Date	Time	TC1	TC2	TC3	TC4	TC5	TC6	TC7	TC8	TC9	TC10	TC11	TC12	TC13	TC14	TC15	TC16	VDC	Amps	Watts
2006/11/15	04:45:00	1213.3	912.2	217.8	267.3	226.1	206.7	499.6	1102.4	208.7	202.5	184.7	209.3	63.3	61.5	63.6	61.8	230.20	30.34	6984.27
2006/11/15	04:46:00	1213.4	910.9	218.0	266.5	226.5	207.2	498.1	1136.9	208.8	202.5	184.7	209.3	63.4	62.0	63.6	61.7	230.20	30.34	6984.27
2006/11/15	04:47:00	1213.2	910.1	218.0	267.4	226.9	206.9	496.7	1129.0	208.8	202.7	184.7	209.3	63.3	62.3	63.5	61.8	230.20	30.34	6984.27
2006/11/15	04:48:00	1213.1	909.9	218.2	266.8	227.4	207.2	498.2	1131.2	209.0	202.5	184.7	209.3	63.3	61.6	63.4	61.8	230.20	30.34	6984.27
2006/11/15	04:49:00	1212.8	908.6	218.2	267.8	227.0	207.3	498.6	1098.4	209.3	202.7	184.7	209.5	63.4	61.5	63.4	62.0	230.20	30.34	6984.27
2006/11/15	04:50:00	1213.7	907.6	218.2	266.6	226.9	207.4	498.3	1127.6	209.1	202.7	184.9	209.5	63.3	61.5	63.6	62.0	230.20	30.34	6984.27
2006/11/15	04:51:00	1213.3	910.4	218.2	266.7	227.5	207.1	498.1	1102.7	209.7	203.0	184.9	209.5	63.3	61.7	63.6	62.0	230.20	30.34	6984.27
2006/11/15	04:52:00	1213.5	911.2	218.2	267.3	227.5	207.2	497.5	1124.2	209.4	202.8	184.9	209.6	63.5	61.7	63.7	62.0	230.20	30.35	6986.57
2006/11/15	04:53:00	1213.3	910.1	218.2	267.3	227.5	207.6	495.8	1112.1	209.3	202.5	184.9	209.6	63.4	61.7	63.8	62.2	230.20	30.34	6984.27
2006/11/15	04:54:00	1213.3	912.1	218.3	267.6	226.4	207.3	498.7	1115.7	209.7	202.7	184.9	209.6	63.4	61.5	63.9	62.2	230.20	30.34	6984.27
2006/11/15	04:55:00	1213.3	909.2	218.2	267.6	227.5	207.4	499.1	1115.0	209.6	202.7	185.0	209.6	63.6	61.3	63.8	62.2	230.20	30.34	6984.27
2006/11/15	04:56:00	1213.7	911.8	218.3	266.8	227.2	207.4	499.5	1120.4	209.6	202.7	185.0	209.7	63.5	61.6	63.6	62.0	230.10	30.33	6978.93
2006/11/15	04:57:00	1213.1	908.6	218.3	268.1	227.5	207.3	499.2	1102.4	209.4	202.7	185.0	209.8	63.4	61.5	63.7	62.0	230.20	30.33	6981.97
2006/11/15	04:58:00	1213.4	910.4	218.2	267.4	227.5	207.6	499.3	1131.8	209.5	203.0	185.0	209.8	63.4	61.4	63.8	62.2	230.20	30.34	6984.27
2006/11/15	04:59:00	1213.6	909.2	218.5	267.4	227.4	207.7	498.8	1134.8	209.3	202.7	185.0	209.7	63.4	61.4	63.8	61.9	230.10	30.34	6981.23
2006/11/15	05:00:00	1213.5	907.6	218.5	267.3	227.5	207.5	498.6	1140.5	209.4	203.0	185.0	209.9	63.5	62.6	63.6	62.0	230.20	30.34	6984.27
2006/11/15	05:01:00	1214.0	908.5	218.7	267.3	227.7	207.9	498.1	1149.2	209.9	203.0	185.2	209.9	63.4	61.7	63.8	62.1	230.20	30.34	6984.27
2006/11/15	05:02:00	1213.5	913.4	218.7	267.4	227.4	208.2	499.5	1127.3	209.6	203.1	185.2	209.9	63.5	62.0	63.9	62.0	230.10	30.33	6978.93
2006/11/15	05:03:00	1212.2	908.8	218.7	267.8	227.7	207.7	498.8	1129.9	209.6	203.1	185.4	209.9	63.4	62.0	63.6	62.0	230.20	30.34	6984.27
2006/11/15	05:04:00	1213.0	908.8	218.7	267.6	227.2	207.7	498.7	1154.2	209.8	203.2	185.2	210.0	63.3	62.0	63.6	62.1	230.20	30.34	6984.27
2006/11/15	05:05:00	1214.0	908.8	218.7	267.9	227.5	207.7	499.9	1144.2	209.4	203.3	185.4	210.0	63.5	62.1	63.6	62.0	230.20	30.34	6984.27
2006/11/15	05:06:00	1214.1	908.5	219.0	266.5	227.5	208.2	498.8	1163.8	209.5	203.2	185.4	210.0	63.2	62.1	63.6	61.8	230.20	30.34	6984.27
2006/11/15	05:07:00	1213.1	910.1	218.8	267.9	227.4	208.1	499.9	1136.7	209.7	203.1	185.5	210.1	63.4	62.1	63.8	62.1	230.20	30.34	6984.27
2006/11/15	05:08:00	1213.0	910.7	219.0	267.1	227.2	208.1	497.2	1156.1	209.7	203.2	185.5	210.1	63.2	61.4	63.9	62.0	230.20	30.34	6984.27
2006/11/15	05:09:00	1213.6	907.4	219.0	267.4	227.4	207.6	499.7	1138.7	209.8	203.2	185.5	210.1	63.4	61.6	63.8	62.0	230.20	30.34	6984.27
2006/11/15	05:10:00	1213.6	910.3	219.0	268.1	227.7	207.8	499.2	1160.7	210.0	203.3	185.5	210.2	63.2	61.4	63.5	61.9	230.20	30.33	6981.97
2006/11/15	05:11:00	1214.0	912.0	218.8	267.4	227.5	207.4	498.1	1143.8	209.8	203.3	185.5	210.2	63.4	62.1	63.5	61.9	230.20	30.34	6984.27
2006/11/15	05:12:00	1213.1	911.8	219.1	267.9	228.0	208.5	497.7	1129.0	210.1	203.5	185.7	210.2	63.6	61.7	64.0	62.0	230.20	30.34	6984.27
2006/11/15	05:13:00	1213.4	912.0	219.1	267.6	227.5	208.3	499.4	1160.4	209.7	203.3	185.7	210.3	63.5	62.8	63.8	61.9	230.20	30.34	6984.27
2006/11/15	05:14:00	1213.8	909.2	219.1	268.4	228.0	208.5	498.4	1121.9	209.8	203.3	185.7	210.3	63.6	64.6	63.8	62.3	230.20	30.34	6984.27
2006/11/15	05:15:00	1212.9	910.1	219.5	267.9	227.5	208.4	499.0	1140.9	210.1	203.7	185.7	210.4	62.8	61.7	63.9	62.1	230.20	30.34	6984.27
2006/11/15	05:16:00	1213.6	909.6	219.1	266.9	227.5	208.6	499.5	1148.9	210.2	203.7	185.7	210.4	63.5	61.7	63.8	62.0	230.10	30.34	6983.54
2006/11/15	05:17:00	1213.6	909.3	219.5	267.7	227.9	208.2	499.4	1146.2	210.3	203.5	185.7	210.5	63.6	62.8	63.8	62.1	230.20	30.34	6984.27
2006/11/15	05:18:00	1213.9	908.6	219.5	267.6	227.7	207.9	500.0	1143.3	210.7	203.8	185.7	210.5	63.6	62.3	63.7	62.4	230.20	30.34	6984.27
2006/11/15	05:19:00	1214.4	910.4	219.5	266.6	228.0	208.6	500.2	1184.4	209.9	203.6	185.9	210.6	63.6	62.4	64.0	62.2	230.20	30.34	6984.27
2006/11/15	05:20:00	1214.3	907.9	219.6	267.8	227.7	208.6	500.4	1123.3	210.2	204.0	186.0	210.6	63.5	62.3	63.6	62.3	230.20	30.34	6984.27
2006/11/15	05:21:00	1213.3	911.7	219.6	266.7	228.0	208.8	499.0	1153.5	210.7	203.8	185.9	210.6	63.6	61.6	63.9	62.1	230.20	30.34	6984.27
2006/11/15	05:22:00	1212.9	913.1	219.7	268.4	227.9	208.9	498.5	1107.5	210.4	204.0	186.0	210.7	63.7	61.5	64.0	62.2	230.20	30.34	6984.27
2006/11/15	05:23:00	1213.3	912.5	219.5	268.4	228.0	208.4	498.6	1132.9	210.5	203.8	186.0	210.6	63.6	61.7	63.6	61.9	230.20	30.34	6984.27
2006/11/15	05:24:00	1213.8	910.0	219.6	267.3	227.5	209.1	498.0	1170.4	210.5	204.0	186.0	210.7	63.5	62.8	64.0	62.1	230.10	30.34	6981.23
2006/11/15	05:25:00	1213.9	912.9	219.7	268.1	228.0	209.1	500.0	1141.7	210.4	203.8	186.0	210.6	63.9	62.3	63.9	62.2	230.10	30.34	6981.23
2006/11/15	05:26:00	1213.9	911.8	219.7	268.4	228.3	209.1	500.4	1149.6	210.4	203.6	186.0	210.6	63.5	61.6	64.2	61.9	230.10	30.34	6981.23
2006/11/15	05:27:00	1213.7	911.6	219.7	267.7	228.3	208.7	500.7	1164.7	210.4	204.1	186.0	210.6	63.4	61.5	63.5	61.5	230.20	30.34	6984.27
2006/11/15	05:28:00	1213.2	907.6	219.7	268.9	227.9	209.3	500.0	1179.6	210.3	204.0	186.2	210.7	63.8	61.5	64.2	62.2	230.20	30.34	6984.27
2006/11/15	05:29:00	1213.6	910.7	219.8	267.9	227.5	209.1	500.7	1157.3	210.9	204.1	186.2	210.8	63.3	61.7	63.9	62.3	230.20	30.34	6984.27
2006/11/15	05:30:00	1213.4	910.0	220.0	267.4	227.0	209.6	499.2	1167.4	210.7	204.0	186.2	210.8	63.8	62.8	64.0	62.0	230.10	30.33	6978.93
2006/11/15	05:31:00	1213.3	910.4	220.0	268.2	228.2	209.2	500.7	1151.7	210.4	204.0	186.4	210.8	63.3	61.9	63.9	62.0	230.20	30.34	6984.27
2006/11/15	05:32:00	1214.0	910.0	220.0	267.9	227.5	209.0	500.7	1178.0	210.5	204.2	186.2	210.8	63.4	61.4	63.5	61.6	230.20	30.34	6984.27
2006/11/15	05:33:00	1213.7	910.0	220.1	267.9	227.5	209.2	500.2	1157.4	211.2	204.3	186.4	210.9	63.5	61.7	63.5	62.0	230.20	30.34	6984.27
2006/11/15	05:34:00	1213.9	911.2	220.3	268.4	227.7	209.1	500.2	1160.5	211.2	204.3	186.2	210.9	63.4	61.9	64.2	62.1	230.10	30.34	6981.23
2006/11/15	05:35:00	1214.6	910.4	220.1	269.2	228.0	209.2	500.2	1172.3	211.2	204.3	186.4	210.9	63.5	62.3	64.0	62.1	230.20	30.34	6984.27
2006/11/15	05:36:00	1215.1	912.1	220.3	268.2	228.0	209.2	499.7	1174.1	210.5	204.2	186.4	211.0	63.5	61.9	63.9	61.7	230.20	30.34	6984.27
2006/11/15	05:37:00	1214.5	910.9	220.3	267.4	228.5	209.8	501.8	1154.7	211.1	204.3	186.4	211.0	63.6	62.1	64.0	62.0	230.20	30.34	6984.27
2006/11/15	05:38:00	1214.7	905.9	220.5	268.2	228.2	209.3	500.4	1181.0	211.2	204.5	186.5	211.0	63.6	62.0	64.0	62.0	230.20	30.34	6984.27
2006/11/15	05:39:00	1213.9	911.6	220.5	268.1	228.3	209.5	500.0	1155.9	211.2	204.5	186.5	211.1	63.7	62.3	64.2	62.0	230.20	30.34	6984.27
2006/11/15	05:40:00	1214.3	912.3	220.5	268.9	227.5	209.5	500.5	1186.4	210.9	204.5	186.5	211.1	63.5	61.6	63.8	61.8	230.20	30.34	6984.27

Heat Rise Test
1st Run

Date	Time	TC1	TC2	TC3	TC4	TC5	TC6	TC7	TC8	TC9	TC10	TC11	TC12	TC13	TC14	TC15	TC16	VDC	Amps	Watts
2006/11/15	05:41:00	1213.8	912.7	220.5	268.7	228.5	210.0	500.7	1153.8	211.2	204.5	186.7	211.2	63.7	61.8	63.9	62.2	230.20	30.34	6984.27
2006/11/15	05:42:00	1213.6	911.8	220.6	268.9	228.2	209.5	500.5	1153.8	211.1	204.6	186.7	211.2	63.6	61.8	63.7	62.2	230.10	30.34	6981.23
2006/11/15	05:43:00	1214.0	911.6	220.5	268.7	228.0	209.7	500.8	1154.2	211.4	204.5	186.7	211.2	63.7	61.4	63.8	62.2	230.20	30.34	6984.27
2006/11/15	05:44:00	1213.3	912.0	220.5	268.6	228.0	209.4	501.7	1180.5	211.0	204.6	186.7	211.3	63.1	61.5	63.7	62.1	230.10	30.34	6981.23
2006/11/15	05:45:00	1214.5	911.5	220.6	268.9	228.2	209.8	501.5	1195.9	211.3	204.6	186.7	211.3	63.6	61.7	63.5	62.1	230.00	30.32	6973.60
2006/11/15	05:46:00	1214.9	908.9	220.7	268.2	228.5	210.1	501.9	1171.2	211.1	204.6	186.5	211.3	63.2	63.1	63.9	62.1	230.00	30.32	6973.60
2006/11/15	05:47:00	1214.1	910.4	220.8	268.6	228.3	210.1	500.7	1169.2	211.1	204.8	186.9	211.4	63.5	61.6	63.9	62.2	230.20	30.34	6984.27
2006/11/15	05:48:00	1212.9	913.4	220.7	268.7	228.5	210.0	501.5	1162.9	211.5	204.8	186.9	211.5	63.3	62.0	63.7	62.0	227.40	30.06	6835.64
2006/11/15	05:49:00	1214.7	911.7	220.9	267.7	228.2	210.2	501.0	1195.9	211.5	205.0	186.7	211.5	63.2	63.5	63.8	62.0	230.20	30.34	6984.27
2006/11/15	05:50:00	1214.1	912.3	221.0	267.7	228.2	210.2	501.6	1202.9	211.7	205.0	187.0	211.5	63.1	61.9	63.6	62.0	230.10	30.34	6981.23
2006/11/15	05:51:00	1213.9	910.1	220.8	268.9	228.0	209.9	502.0	1203.6	212.0	205.1	186.9	211.5	63.0	61.2	63.5	62.6	230.20	30.34	6984.27
2006/11/15	05:52:00	1214.7	909.8	221.0	268.9	228.8	210.0	502.1	1186.6	211.5	205.0	187.0	211.5	63.5	61.1	64.1	62.1	230.10	30.33	6978.93
2006/11/15	05:53:00	1214.1	912.5	220.9	268.9	228.5	209.8	502.0	1164.4	211.4	204.8	187.0	211.5	63.2	61.0	63.3	61.9	230.10	30.34	6981.23
2006/11/15	05:54:00	1215.1	907.6	221.1	268.2	228.0	210.0	500.8	1192.4	211.4	205.0	186.9	211.5	63.0	61.3	63.4	61.7	230.20	30.34	6984.27
2006/11/15	05:55:00	1215.1	906.5	221.0	268.7	228.2	210.0	499.4	1197.7	211.2	205.0	187.0	211.6	63.2	63.2	63.4	61.6	230.20	30.34	6984.27
2006/11/15	05:56:00	1214.4	910.6	221.0	268.7	227.7	210.2	501.7	1198.5	211.3	205.0	187.0	211.6	63.3	63.6	63.4	61.4	230.20	30.34	6984.27
2006/11/15	05:57:00	1214.4	912.3	220.9	267.8	228.7	210.0	500.8	1179.6	211.6	204.8	187.2	211.6	63.2	61.0	63.5	61.8	230.20	30.34	6984.27
2006/11/15	05:58:00	1213.5	913.3	221.0	268.9	228.7	209.6	501.0	1191.8	211.3	205.0	187.0	211.6	63.3	61.0	63.4	61.3	230.20	30.34	6984.27
2006/11/15	05:59:00	1213.5	908.9	221.0	269.2	227.7	209.9	501.9	1195.9	211.3	204.8	187.0	211.7	62.6	61.5	63.1	61.0	230.20	30.34	6984.27
2006/11/15	06:00:00	1214.0	909.7	221.0	268.7	228.2	209.5	500.5	1190.4	211.5	204.8	187.0	211.7	62.3	61.3	63.1	61.1	230.20	30.34	6984.27
2006/11/15	06:01:00	1214.6	910.9	221.2	268.7	227.9	209.9	501.6	1188.3	211.8	205.1	187.0	211.7	63.2	61.8	63.3	61.1	230.20	30.34	6984.27
2006/11/15	06:02:00	1214.4	910.0	221.3	268.4	229.3	210.7	500.5	1194.8	212.3	205.3	187.0	211.7	63.3	62.4	63.4	61.6	230.10	30.34	6981.23
2006/11/15	06:03:00	1214.1	911.8	221.3	268.7	229.5	210.1	502.4	1182.7	211.8	205.2	187.2	211.8	63.4	61.4	63.5	61.4	230.20	30.34	6984.27
2006/11/15	06:04:00	1214.3	911.4	221.3	269.7	228.7	210.6	501.8	1175.7	211.6	205.5	187.2	211.8	63.4	61.2	63.5	61.3	230.10	30.34	6981.23
2006/11/15	06:05:00	1214.1	910.4	221.3	268.2	228.3	210.0	501.8	1182.8	211.3	205.3	187.4	211.9	62.6	61.1	63.3	61.1	230.20	30.34	6984.27
2006/11/15	06:06:00	1213.9	912.4	221.5	267.8	229.0	210.0	501.0	1185.1	211.9	205.5	187.4	211.9	63.0	61.6	63.6	61.1	230.10	30.34	6981.23
2006/11/15	06:07:00	1214.4	912.1	221.3	269.4	228.5	210.1	500.8	1186.6	211.4	205.5	187.4	211.9	63.2	61.4	63.1	60.9	230.20	30.34	6984.27
2006/11/15	06:08:00	1215.4	911.2	221.3	269.4	228.7	210.1	501.9	1211.7	211.9	205.3	187.4	211.9	63.0	60.8	63.3	61.6	230.20	30.33	6981.97
2006/11/15	06:09:00	1214.3	911.1	221.5	268.7	228.2	210.4	501.9	1201.4	211.8	205.5	187.4	211.9	63.0	60.6	63.3	61.1	230.20	30.34	6984.27
2006/11/15	06:10:00	1215.9	910.4	221.6	267.8	228.5	210.1	502.2	1186.4	211.9	205.6	187.5	211.9	63.2	60.6	63.2	61.1	230.20	30.33	6984.27
2006/11/15	06:11:00	1215.0	911.9	221.6	269.0	228.3	210.3	501.0	1192.9	211.8	205.5	187.2	211.8	63.1	61.7	63.3	61.1	230.20	30.34	6984.27
2006/11/15	06:12:00	1214.7	911.8	221.6	269.2	228.8	210.6	502.2	1208.4	212.0	205.5	187.4	211.8	63.3	62.1	63.3	61.3	230.20	30.34	6984.27
2006/11/15	06:13:00	1215.9	911.1	221.7	268.7	228.3	210.1	501.5	1203.6	212.2	205.5	187.4	211.9	63.0	62.3	63.2	61.2	230.20	30.34	6984.27
2006/11/15	06:14:00	1215.1	912.9	221.7	268.4	228.3	210.5	500.2	1203.6	211.6	205.5	187.5	211.9	63.1	61.4	63.1	61.0	230.20	30.34	6984.27
2006/11/15	06:15:00	1214.4	910.9	221.9	269.0	229.0	210.4	501.9	1205.4	211.7	205.6	187.5	212.0	62.8	61.1	63.1	61.2	230.20	30.34	6984.27
2006/11/15	06:16:00	1214.4	911.8	221.9	269.7	228.5	210.6	502.2	1207.2	212.1	205.7	187.5	212.1	63.4	61.1	63.5	61.2	230.20	30.34	6984.27
2006/11/15	06:17:00	1214.6	911.6	221.9	269.4	228.8	211.0	501.5	1189.1	212.6	206.0	187.7	212.1	63.2	61.5	63.4	61.6	230.20	30.34	6984.27
2006/11/15	06:18:00	1214.6	911.1	221.9	269.0	228.8	210.8	501.7	1211.8	212.1	205.6	187.7	212.2	63.1	62.6	63.5	61.3	230.20	30.34	6984.27
2006/11/15	06:19:00	1215.6	909.8	222.0	268.9	228.7	211.0	501.7	1176.9	212.2	205.6	187.7	212.2	63.2	61.3	63.7	61.5	230.20	30.34	6984.27
2006/11/15	06:20:00	1214.7	913.7	221.9	269.2	228.2	210.6	501.9	1185.6	212.4	205.7	188.0	212.3	63.4	62.3	63.4	61.4	230.20	30.33	6981.97
2006/11/15	06:21:00	1213.8	912.7	222.2	269.4	228.5	210.7	502.0	1200.3	212.5	205.8	187.9	212.2	63.0	61.8	63.3	61.2	230.20	30.34	6984.27
2006/11/15	06:22:00	1214.1	910.3	222.2	269.2	228.5	210.7	502.3	1220.5	212.5	205.8	187.7	212.2	62.8	61.5	63.1	61.1	230.10	30.33	6978.93
2006/11/15	06:23:00	1215.1	910.4	222.1	268.9	228.3	210.7	501.5	1195.6	212.4	205.7	187.9	212.3	63.2	61.1	63.2	61.3	230.20	30.34	6984.27
2006/11/15	06:24:00	1214.9	911.9	222.2	269.2	228.2	211.0	502.0	1206.1	212.5	205.6	188.0	212.3	63.2	61.3	63.3	61.4	230.20	30.34	6984.27
2006/11/15	06:25:00	1214.5	909.8	222.3	270.0	228.5	211.0	501.3	1231.3	212.2	205.7	188.0	212.4	62.8	62.4	63.1	61.2	230.10	30.32	6976.63
2006/11/15	06:26:00	1213.9	911.2	222.2	269.2	229.0	211.0	502.7	1201.9	211.9	205.7	188.0	212.4	63.0	61.4	63.1	61.2	230.20	30.33	6984.27
2006/11/15	06:27:00	1215.8	911.9	222.5	269.4	229.0	211.2	501.5	1211.2	212.5	205.8	188.0	212.5	63.0	61.1	63.4	61.5	230.20	30.33	6981.97
2006/11/15	06:28:00	1214.6	912.0	222.4	269.5	228.8	211.2	502.0	1197.7	212.4	206.1	188.2	212.6	63.1	61.6	63.2	61.2	230.20	30.32	6982.70
2006/11/15	06:29:00	1213.9	912.6	222.4	269.7	229.2	211.1	502.9	1207.3	212.5	206.0	188.2	212.6	63.2	61.8	63.5	61.5	230.20	30.34	6984.27
2006/11/15	06:30:00	1214.8	911.5	222.4	268.6	228.7	210.4	503.1	1200.1	212.4	206.0	188.2	212.6	63.2	61.7	63.4	61.4	230.20	30.33	6981.97
2006/11/15	06:31:00	1214.7	911.1	222.6	269.8	228.5	211.3	502.5	1216.1	212.4	206.0	188.2	212.6	63.1	63.1	63.2	61.3	230.20	30.34	6984.27
2006/11/15	06:32:00	1214.5	912.1	222.4	269.7	229.3	211.1	502.5	1203.6	212.5	206.0	188.2	212.6	63.0	62.1	63.1	61.1	230.20	30.33	6981.97
2006/11/15	06:33:00	1214.6	911.1	222.3	269.7	229.5	211.2	503.0	1233.9	212.6	206.0	188.4	212.7	62.8	61.0	63.1	61.3	230.20	30.33	6981.97
2006/11/15	06:34:00	1215.1	909.6	222.8	268.7	229.0	211.6	501.0	1229.7	212.8	206.1	188.2	212.7	63.5	61.2	63.2	61.3	230.20	30.34	6984.27
2006/11/15	06:35:00	1214.8	913.4	222.7	270.2	229.0	211.3	501.9	1211.8	212.6	206.0	188.4	212.7	63.0	61.1	63.4	61.0	230.20	30.34	6984.27
2006/11/15	06:36:00	1214.7	910.9	222.6	269.4	229.2	211.1	503.0	1229.0	212.8	206.0	188.2	212.7	63.0	61.3	63.2	61.1	230.20	30.33	6981.97

Heat Rise Test
1st Run

Date	Time	TC1	TC2	TC3	TC4	TC5	TC6	TC7	TC8	TC9	TC10	TC11	TC12	TC13	TC14	TC15	TC16	VDC	Amps	Watts
2006/11/15	06:37:00	1214.9	909.4	222.8	268.9	229.0	210.5	503.9	1214.9	212.4	206.0	188.2	212.7	62.8	61.4	63.0	61.0	230.20	30.33	6981.97
2006/11/15	06:38:00	1214.7	913.6	222.7	269.4	229.2	211.5	503.7	1222.1	212.8	206.2	188.2	212.8	63.1	60.6	63.1	61.5	230.10	30.33	6978.93
2006/11/15	06:39:00	1215.5	913.1	222.6	269.4	228.8	211.5	504.2	1207.9	212.8	206.1	188.4	212.8	63.1	60.9	63.0	61.3	230.10	30.33	6978.93
2006/11/15	06:40:00	1215.4	912.5	222.8	268.9	228.8	211.4	503.2	1218.9	212.8	206.1	188.4	212.9	63.1	61.5	63.1	61.3	230.20	30.33	6981.97
2006/11/15	06:41:00	1215.1	914.1	222.8	268.6	228.5	211.4	504.2	1220.0	213.1	206.3	188.4	212.8	62.8	61.0	63.2	61.3	230.20	30.34	6984.27
2006/11/15	06:42:00	1214.5	912.4	223.0	270.2	229.2	211.4	502.6	1215.9	212.9	206.4	188.5	212.9	63.1	60.6	62.8	61.0	229.80	30.29	6960.64
2006/11/15	06:43:00	1215.1	910.9	223.0	269.4	228.5	211.8	503.6	1236.6	212.9	206.4	188.4	212.9	62.8	60.9	63.2	61.0	230.20	30.34	6984.27
2006/11/15	06:44:00	1215.1	912.8	223.0	270.2	229.5	211.4	503.1	1222.1	213.1	206.4	188.4	212.9	62.8	60.6	63.2	61.3	230.20	30.33	6981.97
2006/11/15	06:45:00	1214.3	912.9	222.9	269.2	229.3	211.6	503.0	1212.1	213.1	206.4	188.5	213.0	63.3	60.4	63.2	61.4	230.10	30.34	6981.23
2006/11/15	06:46:00	1215.0	912.2	223.0	269.2	229.3	211.6	503.2	1217.3	213.0	206.6	188.5	213.0	63.6	61.6	63.4	61.3	230.20	30.34	6984.27
2006/11/15	06:47:00	1214.9	914.7	223.1	270.2	229.2	212.3	503.4	1212.2	213.4	206.9	188.7	213.0	62.8	61.5	62.8	61.3	230.20	30.34	6984.27
2006/11/15	06:48:00	1214.5	913.0	223.2	270.2	230.0	212.4	503.9	1226.0	212.7	206.8	188.7	213.1	63.3	61.1	63.6	61.9	230.10	30.33	6978.93
2006/11/15	06:49:00	1214.8	910.7	223.1	269.7	230.0	212.3	502.6	1222.9	213.7	206.7	188.5	213.0	63.5	62.8	64.1	62.1	229.30	30.23	6931.74
2006/11/15	06:50:00	1214.8	912.4	223.2	269.2	229.6	212.2	504.7	1235.1	214.0	207.0	188.7	213.1	63.2	62.1	64.0	61.9	230.20	30.34	6984.27
2006/11/15	06:51:00	1214.9	913.4	223.1	268.9	229.2	212.2	504.0	1227.3	213.4	206.8	188.7	213.1	63.2	60.6	63.0	61.1	230.10	30.34	6981.23
2006/11/15	06:52:00	1214.9	913.6	223.2	269.7	229.6	212.0	502.5	1227.4	213.2	206.8	188.9	213.1	63.1	60.6	63.2	61.0	230.10	30.33	6978.93
2006/11/15	06:53:00	1214.3	912.7	223.3	270.0	230.0	212.1	504.3	1218.6	213.2	206.8	189.0	213.2	63.2	61.1	63.5	61.3	230.00	30.18	6941.40
2006/11/15	06:54:00	1214.2	914.4	223.3	269.7	229.2	212.1	502.7	1225.1	213.2	206.6	189.0	213.2	63.1	63.0	63.0	61.2	230.10	30.21	6951.32
2006/11/15	06:55:00	1214.4	912.8	223.5	270.0	229.5	212.1	504.2	1223.4	213.5	206.9	189.0	213.2	62.8	61.3	63.1	61.1	230.20	30.34	6984.27
2006/11/15	06:56:00	1214.5	912.8	223.3	268.9	229.5	212.3	503.7	1214.3	213.5	206.7	189.0	213.2	63.1	61.2	63.3	61.0	230.20	30.34	6984.27
2006/11/15	06:57:00	1215.1	912.1	223.4	270.7	229.6	212.2	503.9	1203.4	213.2	206.9	189.0	213.4	63.0	61.0	63.4	60.9	230.20	30.33	6981.97
2006/11/15	06:58:00	1215.1	913.0	223.5	270.4	229.6	212.4	503.0	1227.4	213.4	206.9	189.0	213.4	63.0	61.0	63.3	61.4	230.20	30.34	6984.27
2006/11/15	06:59:00	1215.1	910.3	223.7	270.2	229.6	212.2	503.6	1229.2	213.4	207.0	189.0	213.4	62.8	62.4	63.4	61.1	230.20	30.34	6984.27
2006/11/15	07:00:00	1215.1	911.8	223.8	270.2	229.8	212.4	504.3	1234.3	213.7	207.2	189.0	213.5	63.0	61.8	63.3	61.5	230.10	30.33	6978.93
2006/11/15	07:01:00	1215.6	910.0	223.9	269.7	228.8	212.3	502.6	1243.1	213.6	207.1	189.0	213.6	63.1	61.5	63.4	61.3	230.20	30.33	6981.97
2006/11/15	07:02:00	1215.6	912.9	223.9	270.0	229.3	212.8	505.0	1207.4	213.6	207.2	189.0	213.6	63.0	62.1	63.4	61.4	230.20	30.33	6981.97
2006/11/15	07:03:00	1215.7	910.9	223.9	269.8	230.1	212.8	503.5	1255.8	213.5	207.4	189.2	213.6	63.2	61.3	63.7	61.1	230.10	30.32	6976.63
2006/11/15	07:04:00	1215.1	913.1	223.9	270.9	229.7	212.8	503.9	1222.1	213.5	207.2	189.2	213.7	62.6	61.4	63.1	60.8	230.20	30.33	6981.97
2006/11/15	07:05:00	1215.5	913.1	224.0	269.7	229.8	213.1	503.5	1235.2	213.7	207.4	189.2	213.7	63.1	61.1	63.4	61.4	230.10	30.33	6978.93
2006/11/15	07:06:00	1215.9	911.1	224.1	270.6	229.6	212.6	505.3	1216.1	213.7	207.2	189.0	213.6	62.8	61.6	63.0	61.1	230.10	30.34	6983.54
2006/11/15	07:07:00	1215.1	914.6	224.1	269.5	229.5	212.8	504.2	1233.3	213.7	207.3	189.2	213.6	63.5	60.6	63.3	61.4	230.10	30.32	6976.63
2006/11/15	07:08:00	1215.6	912.6	224.2	270.6	229.6	212.5	504.8	1238.1	213.6	207.3	189.2	213.7	63.0	62.0	63.3	61.4	230.20	30.34	6984.27
2006/11/15	07:09:00	1215.0	908.6	224.1	269.4	230.0	212.5	503.9	1229.5	213.6	207.1	189.2	213.7	62.8	61.2	63.3	61.1	230.00	30.32	6975.90
2006/11/15	07:10:00	1215.1	912.4	224.2	270.5	230.5	212.7	504.5	1226.0	214.2	207.1	189.2	213.7	63.1	60.6	63.4	61.4	229.10	30.21	6923.40
2006/11/15	07:11:00	1215.1	913.6	224.1	270.4	229.5	212.8	505.0	1245.9	213.9	207.4	189.4	213.7	62.8	60.9	63.8	61.3	229.90	30.33	6977.47
2006/11/15	07:12:00	1216.2	913.6	224.2	269.7	229.7	212.7	505.0	1241.4	213.4	207.5	189.5	213.7	62.8	61.0	63.1	61.1	230.20	30.33	6981.97
2006/11/15	07:13:00	1216.2	912.8	224.2	270.8	229.7	212.9	505.0	1255.1	214.0	207.5	189.5	213.7	63.2	61.3	63.4	61.4	230.20	30.34	6984.27
2006/11/15	07:14:00	1216.2	914.1	224.4	270.2	229.7	213.4	504.5	1248.2	214.4	207.7	189.4	213.9	63.0	62.3	63.5	61.4	230.10	30.34	6981.23
2006/11/15	07:15:00	1215.7	912.5	224.4	269.4	230.0	212.9	503.7	1238.7	214.1	207.7	189.5	214.0	63.3	61.6	63.6	61.5	229.10	30.20	6918.82
2006/11/15	07:16:00	1214.9	910.9	224.5	270.5	230.0	213.2	504.5	1223.6	214.5	207.8	189.5	214.0	63.3	61.4	63.9	61.4	230.10	30.32	6976.63
2006/11/15	07:17:00	1215.7	912.8	224.6	271.2	229.8	213.4	506.0	1262.7	214.2	208.0	189.5	214.0	63.4	62.0	63.8	61.5	229.40	30.30	6950.82
2006/11/15	07:18:00	1214.4	913.1	224.5	270.2	230.0	213.2	505.1	1234.0	214.6	208.1	189.5	214.1	62.8	61.4	63.5	61.7	230.00	30.31	6971.30
2006/11/15	07:19:00	1215.5	909.7	224.4	270.2	229.6	213.2	504.5	1239.6	214.9	208.2	189.5	214.2	63.1	61.8	63.6	61.9	230.00	30.28	6964.40
2006/11/15	07:20:00	1215.2	913.1	224.6	270.5	229.7	213.4	504.8	1243.3	214.9	208.2	189.5	214.1	63.6	61.8	63.8	62.2	230.10	30.33	6978.93
2006/11/15	07:21:00	1215.2	910.4	224.5	269.7	230.3	213.4	505.0	1235.4	214.4	208.0	189.7	214.2	63.5	61.2	63.8	61.4	229.50	30.24	6940.08
2006/11/15	07:22:00	1215.9	912.2	224.6	270.5	230.4	213.6	504.3	1249.9	214.1	208.0	189.7	214.1	63.6	61.5	63.8	61.5	230.10	30.33	6978.93
2006/11/15	07:23:00	1215.6	911.5	224.6	270.2	229.7	213.5	504.8	1230.6	214.9	208.3	189.7	214.1	64.2	62.8	63.0	62.3	229.70	30.29	6957.61
2006/11/15	07:24:00	1215.9	912.7	224.6	271.9	230.3	213.6	505.1	1261.5	215.7	208.5	189.5	214.1	62.8	63.1	63.4	63.4	230.10	30.33	6981.23
2006/11/15	07:25:00	1215.5	915.1	224.7	271.6	230.8	213.4	505.5	1250.9	215.4	208.7	189.7	214.1	63.3	63.3	63.3	63.5	229.90	30.31	6968.27
2006/11/15	07:26:00	1215.9	911.8	224.8	270.2	230.7	213.7	505.5	1251.6	215.5	208.5	189.7	214.2	63.9	62.6	64.2	62.6	230.20	30.34	6984.27
2006/11/15	07:27:00	1215.1	913.1	224.9	269.7	230.4	214.0	505.0	1237.0	215.5	208.6	189.9	214.2	64.1	62.6	63.9	62.2	229.90	30.25	6963.67
2006/11/15	07:28:00	1215.0	913.4	225.0	270.8	229.8	213.5	505.0	1238.3	214.7	208.4	190.0	214.2	63.1	63.2	63.9	61.6	230.00	30.32	6973.60
2006/11/15	07:29:00	1215.4	913.1	225.0	271.0	230.8	213.7	504.8	1233.3	215.2	208.6	190.2	214.2	63.9	62.8	63.1	62.6	229.90	30.32	6976.63
2006/11/15	07:30:00	1215.8	914.8	225.0	271.1	230.0	214.2	505.3	1243.6	215.9	208.9	190.0	214.2	63.3	63.2	63.1	62.6	229.90	30.32	6970.57
2006/11/15	07:31:00	1215.7	914.1	225.2	270.7	229.8	213.6	506.3	1210.5	215.4	209.1	190.0	214.4	63.1	62.6	62.8	63.2	229.90	30.29	6963.67
2006/11/15	07:32:00	1216.1	913.1	225.2	270.4	231.1	213.9	504.8	1242.1	215.7	209.1	190.2	214.4	63.2	62.8	63.9	63.4	230.00	30.32	6973.60

Heat Rise Test
1st Run

Date	Time	TC1	TC2	TC3	TC4	TC5	TC6	TC7	TC8	TC9	TC10	TC11	TC12	TC13	TC14	TC15	TC16	VDC	Amps	Watts
2006/11/15	07:33:00	1215.9	914.8	225.2	270.2	230.5	214.2	504.0	1254.4	215.7	209.2	190.2	214.5	63.3	62.8	63.9	62.8	229.60	30.27	6949.99
2006/11/15	07:34:00	1214.8	914.1	225.2	270.2	230.2	213.7	505.9	1232.1	214.9	208.7	190.2	214.5	63.4	60.6	63.7	61.2	229.90	30.32	6970.57
2006/11/15	07:35:00	1215.0	911.4	225.1	270.8	229.5	213.4	505.8	1232.8	214.5	208.5	190.2	214.4	62.6	60.9	62.8	60.2	230.10	30.32	6976.63
2006/11/15	07:36:00	1215.6	912.4	224.9	270.8	230.1	213.2	506.3	1265.2	214.9	208.5	190.2	214.4	62.3	59.9	62.3	60.1	230.10	30.33	6978.93
2006/11/15	07:37:00	1215.9	913.6	225.1	270.9	230.2	213.7	505.5	1248.5	215.2	208.6	190.0	214.4	62.4	60.0	62.8	60.6	230.20	30.33	6981.97
2006/11/15	07:38:00	1214.9	913.7	225.2	271.7	230.3	213.4	505.3	1224.1	214.9	208.8	190.2	214.4	62.4	60.6	63.4	60.4	229.60	30.27	6949.99
2006/11/15	07:39:00	1214.1	913.3	225.0	271.7	230.4	213.6	505.6	1254.6	214.9	208.6	190.2	214.5	61.9	59.9	62.0	59.9	230.00	30.32	6973.60
2006/11/15	07:40:00	1214.4	913.7	225.2	270.2	230.0	213.7	505.2	1253.1	215.1	208.7	190.2	214.4	61.9	60.8	62.0	59.8	230.00	30.32	6973.60
2006/11/15	07:41:00	1215.7	914.1	225.4	270.0	230.2	213.1	506.6	1268.3	215.4	208.6	190.2	214.5	62.2	61.4	62.8	60.9	230.10	30.32	6976.63
2006/11/15	07:42:00	1215.7	912.1	225.5	271.2	231.2	214.1	505.8	1242.6	215.7	209.2	190.2	214.6	63.0	61.3	63.4	61.9	229.40	30.24	6937.06
2006/11/15	07:43:00	1215.9	912.5	225.4	270.4	230.3	213.7	506.6	1242.8	216.0	209.0	190.2	214.6	62.8	61.5	62.6	61.9	230.10	30.33	6978.93
2006/11/15	07:44:00	1215.4	913.1	225.5	269.9	231.0	213.9	505.6	1248.8	216.5	209.3	190.2	214.7	62.6	62.1	62.8	62.2	230.00	30.31	6971.30
2006/11/15	07:45:00	1215.4	910.1	225.6	270.2	229.3	214.5	505.2	1265.9	216.0	209.4	190.4	214.7	62.6	62.6	64.1	62.0	230.10	30.32	6976.63
2006/11/15	07:46:00	1216.3	914.4	225.7	270.6	229.0	213.9	505.8	1260.3	215.5	209.3	190.5	214.9	62.8	61.0	63.1	61.1	229.80	30.30	6962.94
2006/11/15	07:47:00	1215.1	909.5	225.7	271.5	230.1	214.0	506.4	1259.3	216.0	208.9	190.5	214.9	62.8	60.4	63.4	61.6	230.10	30.31	6974.33
2006/11/15	07:48:00	1215.4	910.7	225.7	270.7	230.9	214.2	506.1	1250.4	215.5	209.1	190.5	214.9	63.2	61.7	63.6	61.7	230.00	30.32	6973.60
2006/11/15	07:49:00	1215.6	913.4	225.7	270.3	230.3	214.1	505.5	1268.4	215.9	209.4	190.7	215.0	63.2	60.8	63.4	61.7	229.10	30.24	6927.98
2006/11/15	07:50:00	1214.8	916.1	225.9	270.7	230.4	214.4	507.2	1224.8	215.5	209.3	190.7	215.0	63.4	61.0	63.7	61.6	229.50	30.31	6956.15
2006/11/15	07:51:00	1215.0	911.9	226.1	270.9	230.3	214.2	506.0	1253.4	215.5	209.4	190.7	215.0	63.3	61.6	63.6	61.3	229.50	30.28	6949.26
2006/11/15	07:52:00	1216.1	912.9	226.1	268.9	230.8	214.2	506.4	1260.1	216.2	209.6	190.7	215.0	63.6	60.9	63.5	62.0	230.00	30.31	6971.30
2006/11/15	07:53:00	1215.5	914.1	226.1	270.8	230.4	214.7	506.0	1255.8	216.0	209.7	190.7	215.1	63.6	61.0	63.6	61.8	230.10	30.33	6978.93
2006/11/15	07:54:00	1215.4	913.1	226.0	270.4	229.7	214.6	504.2	1238.3	216.2	209.7	190.7	215.1	63.7	62.2	64.0	61.9	230.00	30.29	6972.76
2006/11/15	07:55:00	1215.1	913.6	226.2	270.4	230.3	214.9	505.9	1257.6	217.0	209.9	190.7	215.1	63.3	63.8	64.0	62.8	229.60	30.26	6947.70
2006/11/15	07:56:00	1215.6	912.7	226.2	271.2	231.7	214.9	504.7	1256.9	216.9	210.0	190.7	215.1	63.7	62.8	63.7	63.7	229.80	30.26	6953.75
2006/11/15	07:57:00	1215.4	910.9	226.2	270.2	231.3	214.7	507.6	1256.0	217.0	210.2	190.9	215.2	62.6	62.8	64.1	63.4	230.10	30.29	6972.76
2006/11/15	07:58:00	1215.6	909.0	226.2	270.4	232.0	214.6	506.2	1271.3	217.0	210.1	191.0	215.2	63.6	63.1	63.8	63.0	229.20	30.25	6933.30
2006/11/15	07:59:00	1215.4	916.0	226.2	271.7	232.4	215.0	506.2	1263.1	217.0	210.4	191.0	215.2	63.9	63.3	63.8	63.4	229.90	30.29	6963.67
2006/11/15	08:00:00	1215.8	912.7	226.2	270.7	231.0	214.9	505.2	1276.8	217.0	210.3	191.0	215.2	63.8	63.2	64.3	62.4	228.50	30.16	6891.56
2006/11/15	08:01:00	1216.2	910.0	226.4	271.4	231.7	214.7	505.5	1274.1	217.0	210.2	190.9	215.2	63.3	63.5	64.0	62.4	229.90	30.32	6970.57
2006/11/15	08:02:00	1215.7	911.2	226.4	270.4	230.8	215.0	507.2	1273.3	216.9	210.3	191.0	215.2	63.5	63.9	63.9	63.5	230.00	30.31	6971.30
2006/11/15	08:03:00	1217.2	913.3	226.2	271.0	230.5	215.2	506.9	1269.3	217.2	210.7	191.2	215.2	63.9	63.2	64.3	63.0	229.80	30.29	6960.64
2006/11/15	08:04:00	1216.8	914.2	226.4	270.9	230.4	215.4	505.9	1278.6	217.2	210.6	191.4	215.4	64.2	63.8	64.4	63.1	229.90	30.27	6962.10
2006/11/15	08:05:00	1215.6	913.0	226.5	272.0	230.9	215.5	506.3	1287.5	216.4	210.5	191.5	215.4	64.3	62.8	64.6	62.4	230.00	30.24	6958.22
2006/11/15	08:06:00	1215.6	911.6	226.5	271.5	231.3	215.2	506.9	1269.8	216.4	210.3	191.5	215.5	64.3	63.8	64.8	62.6	229.90	30.32	6977.47
2006/11/15	08:07:00	1215.7	912.7	226.7	272.1	231.2	214.9	506.6	1250.1	216.7	210.7	191.5	215.5	63.8	62.8	64.2	62.6	228.90	30.16	6903.62
2006/11/15	08:08:00	1215.5	913.7	226.7	272.1	231.6	215.0	506.2	1270.1	217.5	210.5	191.5	215.5	64.0	63.4	64.3	63.0	229.50	30.26	6944.67
2006/11/15	08:09:00	1215.2	914.9	226.7	271.8	231.7	215.2	506.6	1267.7	217.2	210.8	191.5	215.5	64.8	64.0	64.8	63.1	229.70	30.30	6959.91
2006/11/15	08:10:00	1215.6	913.4	226.9	271.3	232.1	215.9	506.7	1277.4	217.7	210.9	191.4	215.5	63.4	63.1	64.2	63.8	229.50	30.28	6951.56
2006/11/15	08:11:00	1216.3	912.9	226.9	271.7	231.8	215.5	505.9	1279.3	217.5	211.1	191.5	215.7	63.8	63.1	63.9	63.9	228.70	30.18	6902.17
2006/11/15	08:12:00	1215.1	914.6	227.0	272.5	231.6	215.2	507.5	1253.9	217.7	211.1	191.7	215.7	64.4	63.1	63.2	63.7	229.90	30.26	6962.10
2006/11/15	08:13:00	1215.4	913.6	227.0	271.9	231.8	215.2	507.6	1286.1	217.0	210.9	191.7	215.9	64.4	62.4	64.6	62.2	229.90	30.27	6959.07
2006/11/15	08:14:00	1215.9	912.0	226.9	270.2	231.6	215.0	507.2	1285.4	216.7	211.0	191.9	215.9	64.1	62.3	64.0	62.0	229.60	30.25	6945.40
2006/11/15	08:15:00	1215.8	914.6	227.2	271.6	231.5	215.7	507.2	1269.6	217.3	210.9	191.7	215.7	64.1	62.0	64.1	62.6	230.00	30.28	6964.40
2006/11/15	08:16:00	1216.2	914.1	227.2	272.0	231.4	215.5	507.5	1281.1	217.3	211.0	191.9	215.9	64.0	63.0	64.4	62.8	229.20	30.25	6933.30
2006/11/15	08:17:00	1216.2	912.9	227.2	270.8	231.5	215.2	506.0	1283.5	217.5	211.1	191.7	215.9	63.9	63.0	63.9	63.0	230.00	30.28	6970.46
2006/11/15	08:18:00	1216.8	914.1	227.2	270.5	231.3	215.9	508.2	1290.3	218.0	211.2	191.7	215.9	63.0	63.2	63.4	63.2	229.70	30.18	6944.42
2006/11/15	08:19:00	1215.9	915.4	227.2	272.1	231.2	215.9	508.0	1254.2	218.0	211.5	191.7	216.0	63.7	63.6	64.0	63.5	230.00	30.29	6966.70
2006/11/15	08:20:00	1215.7	915.6	227.2	271.5	231.5	215.7	507.0	1255.1	217.8	211.3	191.9	216.0	63.9	63.1	64.6	62.6	229.60	30.27	6952.29
2006/11/15	08:21:00	1215.4	913.4	227.2	271.1	232.6	215.5	506.6	1272.7	217.2	211.2	192.0	216.0	64.1	62.2	64.1	62.0	229.90	30.28	6967.43
2006/11/15	08:22:00	1216.6	915.3	227.2	271.2	232.1	215.7	507.7	1281.6	217.8	211.3	192.0	216.0	64.0	62.1	64.2	62.2	230.00	30.32	6973.60
2006/11/15	08:23:00	1216.1	912.0	227.2	272.1	232.3	215.9	507.4	1271.1	217.2	211.3	192.0	216.0	64.3	62.8	64.6	62.6	230.00	30.32	6978.93
2006/11/15	08:24:00	1215.2	913.7	227.2	272.0	231.3	215.5	508.2	1289.1	217.2	210.9	192.0	216.0	63.7	62.2	64.0	62.0	229.80	30.28	6958.34
2006/11/15	08:25:00	1216.6	911.7	227.4	271.7	231.4	215.4	508.3	1264.3	217.2	211.2	192.0	216.0	63.4	62.0	63.9	61.9	229.90	30.29	6970.57
2006/11/15	08:26:00	1216.4	913.3	227.5	272.1	231.8	215.4	508.2	1285.1	217.2	211.3	192.0	216.2	63.6	61.6	63.8	62.1	229.90	30.30	6970.57
2006/11/15	08:27:00	1216.2	910.6	227.5	271.9	231.4	215.5	508.7	1254.5	217.2	211.2	192.0	216.2	63.9	61.9	64.1	61.9	229.40	30.26	6941.64
2006/11/15	08:28:00	1215.5	913.0	227.5	271.7	231.7	215.5	509.3	1274.5	217.0	211.3	192.0	216.2	63.8	61.8	64.0	61.9	229.50	30.28	6949.26

Heat Rise Test
1st Run

Date	Time	TC1	TC2	TC3	TC4	TC5	TC6	TC7	TC8	TC9	TC10	TC11	TC12	TC13	TC14	TC15	TC16	VDC	Amps	Watts
2006/11/15	08:29:00	1217.7	911.4	227.5	271.8	231.5	215.7	507.2	1295.1	217.3	211.4	192.2	216.2	63.6	61.1	63.9	62.0	229.10	30.25	6930.28
2006/11/15	08:30:00	1216.9	914.9	227.7	272.0	231.4	215.2	508.7	1282.7	216.9	211.2	192.2	216.2	63.8	61.6	63.9	62.1	228.40	30.16	6888.54
2006/11/15	08:31:00	1216.6	913.6	227.7	272.1	231.6	215.4	508.5	1276.3	217.5	211.3	192.2	216.2	63.2	61.5	63.9	61.9	229.60	30.27	6949.99
2006/11/15	08:32:00	1215.9	915.1	227.7	271.7	231.5	215.9	508.5	1264.9	217.3	211.1	192.2	216.2	63.7	64.1	64.1	62.1	229.90	30.26	6959.07
2006/11/15	08:33:00	1215.8	916.1	227.7	271.9	231.5	216.0	508.2	1286.1	217.2	211.3	192.2	216.2	63.6	61.7	64.2	61.9	230.10	30.32	6976.63
2006/11/15	08:34:00	1215.7	912.9	227.7	271.9	231.4	215.5	507.7	1276.6	217.8	211.2	192.2	216.2	63.3	61.0	63.8	62.0	230.10	30.33	6978.93
2006/11/15	08:35:00	1215.6	913.6	227.9	272.4	231.2	216.2	508.0	1277.4	218.2	211.5	192.2	216.2	64.0	62.8	64.3	62.2	229.80	30.32	6974.43
2006/11/15	08:36:00	1215.1	914.1	227.7	271.5	232.5	216.2	507.4	1297.2	218.3	211.5	192.2	216.2	64.4	63.9	63.5	63.1	229.80	30.31	6965.24
2006/11/15	08:37:00	1215.2	915.5	227.9	271.9	231.5	216.4	509.0	1293.0	217.5	211.7	192.4	216.4	64.1	63.5	63.7	63.2	229.90	30.29	6966.70
2006/11/15	08:38:00	1215.9	914.4	228.0	271.4	231.2	216.0	507.1	1274.3	218.5	211.7	192.4	216.4	63.7	63.7	64.1	63.7	230.00	30.31	6973.60
2006/11/15	08:39:00	1216.9	913.6	228.0	271.9	232.1	216.2	508.3	1290.2	219.0	212.0	192.2	216.4	63.6	64.4	64.1	63.4	229.80	30.27	6958.34
2006/11/15	08:40:00	1216.6	913.6	228.0	271.9	232.7	216.0	506.9	1317.4	219.0	212.4	192.4	216.4	63.4	64.6	64.6	63.2	229.90	30.29	6976.63
2006/11/15	08:41:00	1216.6	911.6	228.0	272.2	232.0	216.5	506.7	1296.2	219.2	212.0	192.4	216.5	63.8	64.4	64.6	63.2	230.10	30.28	6973.48
2006/11/15	08:42:00	1216.4	914.5	228.0	272.6	231.8	216.2	508.0	1296.2	218.0	212.3	192.5	216.5	63.8	61.6	64.2	62.0	229.70	30.30	6964.50
2006/11/15	08:43:00	1215.1	916.4	227.2	272.8	232.1	216.2	507.7	1291.0	218.0	211.8	192.7	216.5	63.4	61.1	64.0	61.5	229.90	30.29	6968.27
2006/11/15	08:44:00	1215.2	914.1	227.5	272.8	231.8	215.5	507.2	1292.3	217.7	211.8	192.5	216.5	63.0	60.4	63.5	60.6	229.80	30.28	6965.24
2006/11/15	08:45:00	1216.2	914.4	228.0	272.4	231.3	216.0	509.3	1284.8	218.0	211.7	192.5	216.5	62.6	60.6	63.3	60.6	229.90	30.28	6961.37
2006/11/15	08:46:00	1215.8	913.1	228.0	271.7	231.9	216.2	508.0	1292.8	217.5	211.7	192.5	216.4	62.6	61.3	63.3	61.1	230.10	30.31	6974.33
2006/11/15	08:47:00	1215.9	912.9	228.0	271.7	232.9	216.4	505.0	1279.1	218.5	211.7	192.2	216.4	62.6	61.5	63.6	62.1	229.80	30.30	6962.94
2006/11/15	08:48:00	1216.1	916.4	228.0	272.1	232.9	216.5	508.0	1284.5	218.8	212.2	192.5	216.5	62.4	62.4	64.3	62.4	230.10	30.33	6981.97
2006/11/15	08:49:00	1215.6	916.9	228.3	272.5	231.8	216.5	507.9	1291.6	219.3	212.2	192.5	216.5	62.4	63.3	63.9	62.6	230.00	30.32	6975.90
2006/11/15	08:50:00	1215.4	912.1	228.3	271.9	232.9	216.5	508.0	1301.3	219.0	212.6	192.7	216.7	62.6	62.2	62.8	63.0	230.10	30.33	6978.93
2006/11/15	08:51:00	1215.6	911.9	228.2	272.4	231.8	216.0	509.7	1290.8	218.5	212.5	192.7	216.7	63.8	62.2	64.0	61.9	230.00	30.31	6971.30
2006/11/15	08:52:00	1215.4	914.1	228.5	272.0	232.1	215.4	508.8	1304.3	218.3	212.5	193.0	216.9	63.9	62.3	64.4	62.3	230.00	30.32	6973.60
2006/11/15	08:53:00	1215.1	912.4	228.5	272.1	231.9	216.7	506.4	1291.3	218.5	212.4	192.9	216.7	64.0	62.6	63.2	62.4	230.10	30.33	6981.23
2006/11/15	08:54:00	1215.9	914.1	228.5	272.2	232.1	216.7	508.2	1291.6	219.0	212.8	192.9	216.9	63.8	64.0	63.4	62.8	229.60	30.24	6943.10
2006/11/15	08:55:00	1215.4	912.8	228.5	272.3	232.2	216.7	509.0	1283.8	219.3	212.9	192.7	216.9	64.1	63.7	63.8	64.2	229.90	30.25	6963.55
2006/11/15	08:56:00	1216.4	913.4	228.5	271.7	232.8	217.0	508.0	1302.0	219.0	212.7	192.9	217.0	64.6	63.2	64.6	63.0	230.00	30.31	6971.30
2006/11/15	08:57:00	1215.4	913.4	228.7	271.6	232.2	217.2	508.7	1286.2	219.0	213.0	193.2	217.0	64.4	63.4	64.4	63.0	230.00	30.32	6973.60
2006/11/15	08:58:00	1216.6	915.1	228.8	272.5	233.3	217.0	509.3	1305.8	220.0	213.2	193.2	217.0	64.8	64.1	64.3	63.9	229.90	30.29	6963.67
2006/11/15	08:59:00	1216.1	913.3	228.7	272.4	232.5	216.7	509.0	1291.0	219.6	213.2	193.4	217.2	64.4	64.6	65.5	63.8	229.90	30.31	6972.87
2006/11/15	09:00:00	1216.2	913.4	228.8	271.9	232.6	217.2	508.7	1288.2	219.8	213.2	193.2	217.2	64.6	63.7	64.8	64.0	230.10	30.33	6978.93
2006/11/15	09:01:00	1216.2	912.1	228.8	271.9	232.9	217.2	509.0	1300.8	219.5	213.4	193.2	217.2	64.8	63.3	64.6	64.0	230.00	30.33	6975.90
2006/11/15	09:02:00	1216.4	913.9	228.8	272.6	232.6	217.0	508.5	1290.6	219.0	213.2	193.2	217.2	64.1	63.2	64.6	63.5	229.70	30.29	6957.61
2006/11/15	09:03:00	1217.0	914.9	229.0	272.5	232.2	217.5	509.0	1306.0	219.3	213.2	193.4	217.2	64.6	63.3	64.8	63.2	229.90	30.32	6970.57
2006/11/15	09:04:00	1215.1	915.1	229.0	273.3	232.2	217.2	508.5	1284.8	219.3	213.2	193.4	217.3	64.0	63.7	65.1	63.3	229.90	30.30	6968.27
2006/11/15	09:05:00	1216.1	912.7	229.0	271.7	232.0	217.0	508.5	1294.0	219.5	213.5	193.4	217.3	64.8	63.2	64.8	64.0	229.90	30.31	6968.27
2006/11/15	09:06:00	1215.2	912.4	229.2	272.7	231.9	216.9	509.3	1302.5	219.6	213.2	193.5	217.3	64.4	63.1	65.2	63.7	230.00	30.32	6973.60
2006/11/15	09:07:00	1215.1	915.1	229.2	272.6	232.4	217.0	509.0	1306.1	219.3	213.2	193.5	217.3	64.4	63.2	64.8	63.2	229.90	30.30	6965.97
2006/11/15	09:08:00	1216.1	916.9	229.2	272.2	232.7	217.2	508.2	1310.7	219.6	213.2	193.7	217.3	63.8	62.6	63.8	62.8	228.20	30.15	6880.23
2006/11/15	09:09:00	1215.9	912.8	229.2	272.1	232.7	217.0	510.5	1291.0	219.7	213.7	193.5	217.3	63.6	63.2	63.8	63.5	230.10	30.32	6979.66
2006/11/15	09:10:00	1215.9	913.7	229.2	272.6	232.3	217.2	508.7	1296.7	219.8	213.2	193.5	217.3	63.4	62.6	64.6	63.4	230.00	30.30	6975.06
2006/11/15	09:11:00	1216.6	911.1	229.2	272.9	232.5	217.2	508.7	1312.3	219.7	213.7	193.5	217.2	63.5	63.2	63.6	63.6	230.00	30.30	6972.03
2006/11/15	09:12:00	1216.6	912.8	229.5	272.8	231.4	217.5	510.1	1282.8	219.5	213.5	193.5	217.3	64.4	62.6	64.8	63.2	229.90	30.28	6967.43
2006/11/15	09:13:00	1216.1	914.8	229.5	272.9	232.4	217.5	509.5	1318.6	219.2	213.6	193.7	217.5	64.2	62.3	64.1	63.1	229.90	30.30	6965.97
2006/11/15	09:14:00	1215.9	913.3	229.5	272.3	232.0	217.7	510.0	1313.0	220.1	213.7	193.7	217.5	63.5	62.8	63.7	63.7	228.80	30.22	6914.34
2006/11/15	09:15:00	1215.9	913.4	229.6	272.6	232.9	217.5	510.3	1324.0	220.0	214.2	193.5	217.5	63.2	63.1	64.1	64.2	229.80	30.28	6958.34
2006/11/15	09:16:00	1216.9	911.8	229.5	271.8	232.1	217.5	510.2	1319.1	220.0	214.0	193.5	217.5	63.3	63.5	64.3	63.8	230.00	30.32	6975.90
2006/11/15	09:17:00	1216.6	913.4	229.6	272.1	232.4	217.5	510.2	1313.8	219.5	214.0	193.7	217.5	63.8	62.6	64.6	63.7	227.80	28.55	6503.69
2006/11/15	09:18:00	1216.1	916.1	229.6	272.8	232.3	217.2	511.4	1290.4	220.5	214.0	193.5	217.5	63.6	63.3	63.4	63.9	229.40	30.22	6932.47
2006/11/15	09:19:00	1216.5	914.5	229.6	273.0	232.5	217.5	509.9	1285.8	220.5	214.1	193.7	217.5	65.0	63.6	64.3	64.4	230.10	30.33	6978.93
2006/11/15	09:20:00	1216.1	914.1	229.6	272.7	232.2	217.7	509.3	1295.7	220.2	214.1	193.7	217.5	64.8	63.9	64.4	63.9	220.50	29.34	6469.47
2006/11/15	09:21:00	1215.9	914.8	229.7	272.6	232.0	217.8	509.3	1296.9	220.5	214.4	193.7	217.7	64.8	63.7	64.2	64.4	229.90	30.31	6971.30
2006/11/15	09:22:00	1217.0	914.6	229.7	272.1	232.2	217.8	509.9	1321.3	220.0	214.1	194.0	217.7	65.0	63.4	65.4	63.4	229.20	30.23	6935.59
2006/11/15	09:23:00	1215.5	913.7	230.0	272.3	233.6	217.8	508.8	1317.8	220.0	213.7	194.0	217.7	65.0	64.0	65.1	63.2	229.90	30.30	6965.97
2006/11/15	09:24:00	1215.4	915.0	230.0	272.1	232.9	217.0	511.0	1284.3	219.5	213.7	194.0	217.8	64.6	62.8	65.1	62.6	230.00	30.30	6972.03

Heat Rise Test
1st Run

Date	Time	TC1	TC2	TC3	TC4	TC5	TC6	TC7	TC8	TC9	TC10	TC11	TC12	TC13	TC14	TC15	TC16	VDC	Amps	Watts
2006/11/15	09:25:00	1216.5	916.6	230.0	273.4	232.9	217.7	511.2	1304.8	219.8	214.2	194.2	218.0	64.0	64.6	63.8	62.6	222.20	29.54	6563.79
2006/11/15	09:26:00	1217.4	913.0	230.2	273.7	233.2	218.2	509.5	1297.0	220.5	214.5	194.0	218.0	64.6	63.7	63.6	64.2	229.80	30.29	6965.24
2006/11/15	09:27:00	1216.6	915.4	230.2	272.9	232.1	218.5	509.8	1283.1	221.2	214.7	194.2	218.0	64.6	64.3	64.3	64.0	230.00	30.31	6971.30
2006/11/15	09:28:00	1217.1	916.6	230.3	272.9	232.8	218.2	510.3	1305.6	221.2	214.7	194.2	218.2	65.2	63.6	63.8	64.8	228.90	30.17	6905.91
2006/11/15	09:29:00	1216.6	912.3	230.3	273.1	233.7	218.5	510.4	1317.8	221.2	215.0	194.0	218.0	65.6	63.5	64.3	65.0	229.80	30.17	6942.12
2006/11/15	09:30:00	1217.1	913.7	230.4	273.2	233.1	217.7	510.3	1310.3	221.0	215.2	194.2	218.2	64.6	63.4	64.8	64.6	230.00	30.32	6975.90
2006/11/15	09:31:00	1216.6	914.4	230.4	272.8	233.4	218.2	510.9	1300.3	221.2	215.0	194.2	218.2	64.8	64.0	65.2	64.6	223.90	29.74	6658.79
2006/11/15	09:32:00	1216.6	914.1	230.5	273.1	233.1	218.7	511.0	1296.0	221.2	215.4	194.2	218.2	64.8	63.6	64.6	64.6	229.70	30.27	6953.02
2006/11/15	09:33:00	1216.8	917.4	230.5	274.2	233.6	218.5	510.4	1296.3	221.5	215.7	194.2	218.2	64.1	63.7	64.8	64.6	229.70	30.31	6971.30
2006/11/15	09:34:00	1217.7	916.0	230.7	273.4	232.9	218.7	511.5	1297.5	221.2	215.7	194.4	218.3	63.7	65.1	65.2	64.8	229.30	30.23	6931.74
2006/11/15	09:35:00	1216.5	916.9	230.7	272.2	233.4	218.5	510.7	1298.8	221.9	216.0	194.5	218.3	63.9	65.3	64.8	64.6	229.80	30.27	6956.05
2006/11/15	09:36:00	1216.5	916.6	230.8	273.4	233.4	218.8	511.7	1311.5	222.1	215.9	194.5	218.5	64.6	65.0	65.2	65.0	230.10	30.32	6976.63
2006/11/15	09:37:00	1216.9	915.1	230.8	273.7	234.2	218.7	510.7	1323.6	221.5	215.9	194.5	218.5	64.8	65.7	65.1	64.6	226.20	29.95	6774.69
2006/11/15	09:38:00	1218.4	914.6	230.9	273.7	233.9	218.7	511.5	1304.0	222.4	216.0	194.7	218.5	64.3	65.7	65.2	65.3	229.70	30.30	6959.91
2006/11/15	09:39:00	1217.6	915.0	230.8	273.1	234.1	218.7	510.7	1314.3	222.0	216.0	194.9	218.7	64.6	65.2	65.2	64.2	230.00	30.31	6971.30
2006/11/15	09:40:00	1217.2	914.6	230.9	273.4	233.4	218.5	510.7	1310.5	221.4	215.7	194.7	218.7	63.1	65.4	64.6	64.6	229.00	30.22	6920.38
2006/11/15	09:41:00	1217.6	916.3	231.0	273.4	233.9	218.7	510.3	1307.0	221.8	216.0	194.7	218.7	63.6	65.2	64.6	65.0	230.10	30.28	6972.03
2006/11/15	09:42:00	1216.6	914.4	230.9	273.9	234.2	218.8	510.6	1313.9	221.8	216.0	194.7	218.7	64.2	65.2	65.4	64.6	229.80	30.28	6958.34
2006/11/15	09:43:00	1217.0	915.8	231.0	273.6	234.2	218.3	509.6	1318.5	221.1	216.0	194.9	218.7	64.4	65.2	65.2	64.3	228.30	30.19	6892.38
2006/11/15	09:44:00	1217.4	915.4	231.0	272.9	234.0	218.8	510.7	1309.0	222.0	215.9	194.9	218.7	64.3	64.8	65.1	64.8	230.10	30.32	6976.63
2006/11/15	09:45:00	1217.4	913.0	231.1	273.7	234.4	218.5	511.0	1307.3	222.2	216.0	195.0	218.8	63.8	64.8	65.0	64.8	227.90	30.08	6855.23
2006/11/15	09:46:00	1217.0	916.1	231.0	273.7	234.2	218.7	511.0	1313.7	222.6	216.2	195.0	218.8	64.4	65.5	65.4	65.1	230.00	30.31	6971.30
2006/11/15	09:47:00	1217.2	914.7	231.2	273.9	233.6	218.2	510.4	1330.8	221.6	216.2	195.0	219.0	63.9	65.0	65.1	64.3	230.20	30.28	6970.46
2006/11/15	09:48:00	1218.2	914.1	231.3	272.8	233.5	218.8	510.2	1322.8	222.0	216.5	195.2	219.0	64.0	65.2	65.2	64.4	229.40	30.26	6941.64
2006/11/15	09:49:00	1217.4	916.1	231.3	272.8	234.2	219.0	511.1	1330.7	222.8	216.5	195.0	219.0	64.8	65.6	65.4	64.6	230.10	30.30	6972.03
2006/11/15	09:50:00	1216.5	915.0	231.3	273.3	234.2	218.8	509.9	1315.2	222.5	216.5	195.0	219.0	64.8	65.7	65.5	64.6	229.90	30.29	6963.67
2006/11/15	09:51:00	1216.3	916.1	231.3	273.6	234.4	219.1	511.4	1299.8	222.5	216.5	195.2	219.0	64.1	64.8	65.0	64.6	229.00	30.18	6911.22
2006/11/15	09:52:00	1217.0	915.8	231.4	273.9	234.0	218.8	511.0	1331.0	222.2	216.7	195.4	219.0	63.8	65.1	65.4	64.8	228.70	30.25	6918.18
2006/11/15	09:53:00	1216.3	916.3	231.5	273.6	234.1	219.1	510.6	1326.1	222.2	216.7	195.4	219.1	64.0	65.7	65.2	64.4	229.00	30.20	6915.80
2006/11/15	09:54:00	1216.2	914.5	231.4	274.4	234.2	219.0	510.7	1326.0	222.7	216.7	195.5	219.2	64.3	65.6	65.3	64.8	229.80	30.30	6969.00
2006/11/15	09:55:00	1215.6	916.0	231.4	274.2	233.4	219.0	510.9	1301.5	222.9	216.5	195.2	219.2	64.6	65.5	64.6	64.8	229.90	30.27	6963.67
2006/11/15	09:56:00	1216.6	915.5	231.4	273.2	233.8	218.8	510.9	1321.4	222.6	216.7	195.4	219.2	64.6	65.4	64.8	64.2	229.20	30.21	6926.42
2006/11/15	09:57:00	1216.6	915.2	231.5	273.9	233.4	219.0	510.4	1315.5	222.6	216.9	195.5	219.3	63.8	65.1	64.6	64.8	229.20	30.21	6924.13
2006/11/15	09:58:00	1217.4	916.1	231.5	272.5	233.5	219.0	511.5	1320.8	222.7	217.0	195.5	219.5	64.4	64.8	65.3	65.2	229.60	30.25	6945.40
2006/11/15	09:59:00	1216.2	915.9	231.7	274.2	234.0	219.2	511.5	1325.6	223.2	217.0	195.5	219.3	63.8	65.4	65.2	65.4	230.10	30.24	6976.63
2006/11/15	10:00:00	1216.5	915.8	231.7	273.6	233.3	219.1	511.0	1308.9	223.3	217.0	195.5	219.5	64.1	65.4	65.3	64.6	230.00	30.30	6972.03
2006/11/15	10:01:00	1216.5	915.5	231.8	273.7	234.0	219.0	512.7	1323.6	222.8	217.0	195.5	219.5	64.3	65.6	65.3	65.1	229.30	30.30	6950.08
2006/11/15	10:02:00	1215.8	916.9	231.9	274.1	234.0	219.5	512.0	1333.4	223.5	217.3	195.7	219.5	64.6	65.4	65.4	65.2	230.10	30.25	6960.53
2006/11/15	10:03:00	1216.1	914.8	231.9	273.2	234.4	219.2	512.5	1334.3	223.0	217.0	195.7	219.5	64.0	65.0	65.3	64.8	229.60	30.22	6940.81
2006/11/15	10:04:00	1216.8	915.7	231.8	273.4	234.0	219.0	511.0	1325.6	222.4	217.2	195.7	219.5	63.5	64.6	64.6	64.2	229.50	30.27	6946.97
2006/11/15	10:05:00	1216.5	915.2	231.8	273.9	234.2	219.0	511.8	1314.8	223.1	217.2	195.9	219.7	64.3	65.6	64.8	64.8	230.20	30.32	6979.66
2006/11/15	10:06:00	1217.2	915.3	231.9	273.6	234.5	219.0	510.7	1315.6	223.2	217.2	195.9	219.7	64.0	65.7	65.0	64.6	229.60	30.29	6954.58
2006/11/15	10:07:00	1216.3	915.9	231.9	273.2	234.6	219.0	510.7	1326.3	223.3	217.2	195.9	219.7	64.4	65.3	65.5	64.8	229.90	30.29	6963.67
2006/11/15	10:08:00	1216.2	917.4	232.0	274.4	233.7	219.3	510.9	1332.7	223.4	217.5	196.0	219.7	63.1	64.8	64.6	64.4	229.30	30.29	6945.50
2006/11/15	10:09:00	1217.0	912.9	232.0	273.6	234.4	219.0	512.5	1316.8	223.1	217.5	196.0	219.7	63.9	65.1	64.8	64.4	229.70	30.26	6953.75
2006/11/15	10:10:00	1216.1	914.4	232.1	274.7	234.0	219.2	510.4	1340.8	223.3	217.5	196.0	219.7	64.0	65.5	65.0	65.0	230.00	30.26	6959.80
2006/11/15	10:11:00	1216.1	916.1	232.2	274.7	234.0	219.0	511.2	1313.5	223.0	217.5	196.0	219.7	63.9	65.0	64.6	65.1	230.10	30.29	6975.79
2006/11/15	10:12:00	1215.4	916.6	232.1	274.7	234.6	219.3	512.3	1329.0	223.0	217.5	196.2	219.7	64.3	65.7	64.6	64.3	226.00	29.93	6764.18
2006/11/15	10:13:00	1216.1	914.5	232.2	273.9	234.5	219.0	511.5	1323.4	223.0	217.5	196.2	219.8	63.4	65.4	64.3	64.8	230.20	30.33	6981.97
2006/11/15	10:14:00	1216.3	913.6	232.2	273.9	234.7	219.6	512.5	1333.0	223.4	217.7	196.2	219.8	63.9	65.5	64.8	64.8	229.80	30.29	6963.67
2006/11/15	10:15:00	1216.9	917.8	232.1	273.9	234.5	219.0	511.2	1347.7	223.4	217.5	196.2	220.0	63.6	65.3	64.6	64.6	229.60	30.25	6945.40
2006/11/15	10:16:00	1217.1	911.4	232.1	274.7	234.5	219.0	510.6	1328.6	223.0	217.7	196.2	220.0	63.6	65.4	64.8	63.8	229.90	30.30	6965.97
2006/11/15	10:17:00	1217.0	915.0	232.2	274.1	234.1	219.3	512.0	1333.0	223.4	217.5	196.4	220.0	63.6	65.5	64.6	63.6	230.00	30.30	6969.00
2006/11/15	10:18:00	1216.9	914.4	232.3	274.4	234.6	219.7	512.2	1340.4	224.2	217.7	196.2	220.0	64.2	66.0	64.8	65.0	228.80	30.17	6902.90
2006/11/15	10:19:00	1216.6	911.9	232.5	274.2	234.9	219.5	511.5	1338.4	223.3	217.8	196.4	220.0	64.4	65.5	65.2	64.6	228.70	30.14	6893.02
2006/11/15	10:20:00	1216.5	914.1	232.4	274.4	234.0	219.1	511.7	1330.7	223.9	218.0	196.5	220.0	64.2	65.9	64.4	64.6	229.00	30.15	6922.44

Heat Rise Test
1st Run

Date	Time	TC1	TC2	TC3	TC4	TC5	TC6	TC7	TC8	TC9	TC10	TC11	TC12	TC13	TC14	TC15	TC16	VDC	Amps	Watts
2006/11/15	10:21:00	1217.1	914.2	232.5	274.1	234.2	219.5	511.5	1343.0	224.2	218.0	196.2	220.1	64.2	65.2	65.1	64.6	228.50	30.11	6889.28
2006/11/15	10:22:00	1216.9	916.4	232.5	274.2	234.1	219.6	511.7	1336.4	223.3	218.2	196.5	220.1	64.1	64.8	65.1	65.0	229.70	30.30	6962.21
2006/11/15	10:23:00	1216.9	918.1	232.4	273.7	234.6	219.7	511.7	1315.5	223.6	218.2	196.5	220.2	64.8	65.0	65.1	65.3	229.50	30.26	6944.67
2006/11/15	10:24:00	1217.3	914.5	232.5	274.9	233.7	219.7	512.0	1333.5	223.7	217.7	196.7	220.3	64.8	65.2	65.2	64.8	228.50	30.18	6896.13
2006/11/15	10:25:00	1216.8	915.8	232.6	273.7	234.0	219.8	511.2	1315.3	223.7	217.7	196.7	220.3	64.8	65.0	65.5	64.6	229.90	30.30	6965.97
2006/11/15	10:26:00	1217.3	913.9	232.7	274.4	234.7	219.8	511.5	1345.0	224.5	218.0	196.7	220.2	64.6	65.4	65.4	65.3	230.10	30.27	6968.15
2006/11/15	10:27:00	1216.9	918.8	232.8	274.7	234.2	219.7	512.0	1331.5	223.8	218.5	196.7	220.3	64.6	65.7	65.1	64.8	229.80	30.29	6963.67
2006/11/15	10:28:00	1216.8	916.0	232.9	273.4	234.7	219.8	512.0	1339.5	223.4	218.3	196.5	220.3	64.3	65.8	64.8	64.2	228.40	30.08	6870.27
2006/11/15	10:29:00	1217.6	916.6	232.8	274.2	235.1	219.7	513.5	1346.0	224.0	218.2	196.7	220.5	64.4	65.7	64.8	64.6	223.40	29.69	6632.75
2006/11/15	10:30:00	1217.5	913.9	232.9	274.4	234.9	220.0	512.0	1349.5	224.2	218.2	196.7	220.5	64.4	65.6	64.8	65.0	229.70	30.08	6924.42
2006/11/15	10:31:00	1216.9	916.9	232.9	274.4	235.2	219.7	512.7	1329.0	223.7	218.2	196.7	220.5	64.6	65.7	65.2	64.3	230.20	30.32	6979.66
2006/11/15	10:32:00	1217.5	916.4	232.9	274.9	235.1	219.6	511.2	1337.7	224.4	218.5	196.7	220.5	64.6	65.1	65.0	65.1	229.20	30.20	6921.84
2006/11/15	10:33:00	1217.0	914.4	233.0	273.9	235.0	219.5	513.5	1331.8	223.9	218.2	196.7	220.5	64.0	65.3	65.0	64.3	229.90	30.27	6965.13
2006/11/15	10:34:00	1217.7	913.9	233.0	274.4	235.0	220.0	512.7	1327.0	224.3	218.5	196.9	220.5	63.9	65.1	64.6	65.1	230.10	30.31	6974.33
2006/11/15	10:35:00	1217.9	916.9	233.1	274.2	234.4	220.0	513.5	1323.4	224.2	218.5	196.9	220.5	64.2	65.5	64.8	64.8	230.00	30.33	6978.20
2006/11/15	10:36:00	1218.0	916.9	233.0	274.4	234.7	219.6	514.3	1337.8	224.5	218.5	197.0	220.5	63.7	65.2	64.8	65.1	230.10	30.32	6976.63
2006/11/15	10:37:00	1217.1	917.2	233.0	274.1	234.7	219.8	512.7	1334.9	224.5	218.2	196.7	220.6	65.1	65.4	65.0	65.4	230.00	30.32	6975.90
2006/11/15	10:38:00	1217.2	913.7	233.2	274.7	234.7	220.0	513.1	1317.0	224.2	218.7	197.0	220.6	63.8	65.6	64.1	64.6	230.10	30.32	6976.63
2006/11/15	10:39:00	1216.9	916.6	233.2	274.7	235.2	220.0	513.0	1340.0	224.2	218.5	197.0	220.7	64.3	65.4	64.6	64.2	230.00	30.31	6971.30
2006/11/15	10:40:00	1217.5	914.4	233.3	274.2	235.2	220.0	512.3	1347.4	223.7	218.7	197.2	220.7	63.8	65.7	64.8	63.7	230.20	30.33	6981.97
2006/11/15	10:41:00	1217.3	914.4	233.3	274.2	235.2	219.8	512.3	1343.4	224.7	218.7	197.2	220.8	65.0	65.0	65.1	65.1	230.00	30.31	6971.30
2006/11/15	10:42:00	1216.9	917.8	233.3	274.6	235.0	220.0	513.0	1338.9	224.2	218.7	197.2	220.8	63.4	65.3	64.6	64.6	230.10	30.32	6976.63
2006/11/15	10:43:00	1217.1	915.1	233.4	275.2	234.7	220.3	511.4	1340.7	223.7	218.7	197.2	220.8	64.3	65.5	65.2	64.8	230.20	30.33	6981.97
2006/11/15	10:44:00	1216.6	915.2	233.5	275.2	234.5	220.1	512.7	1350.0	224.8	218.7	197.2	220.8	63.8	65.1	65.0	65.4	230.20	30.33	6981.97
2006/11/15	10:45:00	1217.1	916.6	233.5	274.7	234.7	220.0	513.0	1353.6	223.8	219.0	197.2	220.9	63.8	64.6	64.8	64.8	230.20	30.33	6981.97
2006/11/15	10:46:00	1217.0	916.4	233.5	274.6	234.7	219.8	513.0	1344.7	224.3	219.0	197.2	220.9	63.8	65.3	65.0	64.2	230.10	30.33	6978.93
2006/11/15	10:47:00	1215.8	914.8	233.5	273.4	235.1	220.1	512.0	1339.3	224.7	218.8	197.4	220.9	63.9	65.2	65.3	64.2	230.10	30.32	6976.63
2006/11/15	10:48:00	1216.1	917.7	233.6	274.7	235.2	220.5	512.2	1344.1	224.4	218.8	197.4	221.0	63.9	65.0	65.1	64.4	230.00	30.33	6978.93
2006/11/15	10:49:00	1216.8	916.7	233.6	274.9	234.7	220.0	513.8	1338.0	224.7	218.8	197.4	221.0	63.8	65.5	64.8	64.8	230.10	30.33	6981.23
2006/11/15	10:50:00	1216.6	916.7	233.6	274.7	234.9	220.1	512.5	1344.3	224.2	218.7	197.5	221.0	63.7	65.4	64.8	64.2	229.80	30.30	6962.94
2006/11/15	10:51:00	1217.2	917.4	233.7	274.9	235.7	220.2	513.0	1329.1	224.7	218.7	197.4	221.0	64.6	65.2	65.0	64.8	229.70	30.28	6955.32
2006/11/15	10:52:00	1217.1	915.5	233.7	274.7	235.2	220.5	512.7	1361.2	225.1	219.1	197.5	221.0	64.6	65.6	65.3	64.4	229.30	30.25	6936.33
2006/11/15	10:53:00	1217.6	913.6	233.7	274.4	234.9	220.2	513.7	1358.0	224.5	219.1	197.5	221.0	64.2	65.6	65.2	64.4	225.60	29.86	6736.42
2006/11/15	10:54:00	1218.3	915.8	233.8	274.6	234.7	220.0	511.5	1368.3	225.2	219.2	197.5	221.1	64.3	65.9	65.3	64.8	229.30	30.22	6929.45
2006/11/15	10:55:00	1217.2	914.5	233.7	275.3	235.0	220.0	513.1	1356.8	224.9	219.3	197.7	221.1	64.3	66.3	64.8	65.4	230.00	30.31	6971.30
2006/11/15	10:56:00	1216.6	914.5	233.7	274.6	235.1	220.3	512.2	1339.3	225.2	219.2	197.5	221.1	63.2	65.5	64.8	65.0	228.50	30.05	6866.43
2006/11/15	10:57:00	1216.5	916.1	233.8	275.2	236.0	220.2	511.8	1346.0	224.8	219.3	197.7	221.1	63.9	64.8	65.2	63.9	229.90	30.29	6963.67
2006/11/15	10:58:00	1216.6	915.5	233.9	274.9	235.4	220.5	513.5	1335.8	225.0	219.3	197.7	221.1	63.8	65.5	65.0	64.2	229.20	30.24	6931.01
2006/11/15	10:59:00	1217.4	917.4	233.8	274.9	235.5	220.1	513.0	1349.6	225.2	219.3	197.7	221.1	64.0	65.4	64.6	64.4	229.90	30.30	6968.27
2006/11/15	11:00:00	1217.3	916.9	234.0	275.2	235.4	220.5	513.8	1353.1	225.2	219.5	197.9	221.2	64.2	65.6	64.8	64.8	229.70	30.21	6957.61
2006/11/15	11:01:00	1216.9	916.9	234.1	274.7	235.2	220.7	512.8	1347.0	225.5	219.8	197.7	221.3	64.2	65.5	65.3	65.1	230.00	30.27	6962.10
2006/11/15	11:02:00	1216.5	916.1	234.0	274.4	234.7	220.5	513.6	1343.0	225.2	219.8	197.9	221.3	64.0	65.2	65.1	64.4	230.10	30.30	6972.03
2006/11/15	11:03:00	1216.3	917.4	234.1	275.2	235.1	220.6	514.3	1359.5	225.0	219.7	197.9	221.4	64.1	65.0	64.6	64.4	230.00	30.31	6971.30
2006/11/15	11:04:00	1217.3	917.1	234.2	275.3	235.0	220.3	511.7	1336.3	224.9	219.7	198.0	221.4	63.0	65.4	64.6	64.8	230.10	30.29	6972.76
2006/11/15	11:05:00	1217.7	916.1	233.9	274.4	235.2	220.3	513.9	1335.1	225.5	219.7	197.9	221.4	63.5	65.4	64.8	64.6	229.70	30.19	6943.70
2006/11/15	11:06:00	1216.9	916.7	234.2	274.6	235.7	220.5	513.0	1337.3	225.7	219.8	197.9	221.4	63.5	65.7	64.8	64.3	230.00	30.31	6971.30
2006/11/15	11:07:00	1217.2	914.9	234.2	275.2	235.2	220.6	514.2	1347.3	224.7	219.6	197.9	221.4	64.0	65.3	65.5	65.1	230.00	30.31	6971.30
2006/11/15	11:08:00	1218.1	915.5	234.2	275.3	235.1	220.5	513.0	1348.3	224.8	219.6	198.0	221.6	63.9	65.3	64.4	64.6	229.80	30.29	6960.64
2006/11/15	11:09:00	1217.3	917.7	234.2	275.4	235.5	220.5	513.4	1354.1	225.7	220.0	198.0	221.6	64.6	65.5	65.1	64.6	230.00	30.31	6971.30
2006/11/15	11:10:00	1217.6	916.9	234.4	274.6	235.5	220.6	514.7	1359.9	226.0	220.0	198.2	221.6	64.4	66.0	65.1	64.8	228.80	30.18	6905.18
2006/11/15	11:11:00	1217.1	917.4	234.5	274.9	235.5	220.8	513.3	1332.7	225.5	220.1	198.2	221.7	64.6	64.8	65.6	65.1	230.10	30.30	6975.06
2006/11/15	11:12:00	1216.8	918.2	234.6	275.2	236.0	220.6	513.3	1329.8	225.5	220.1	198.2	221.8	64.1	65.3	65.3	64.6	229.70	30.29	6957.61
2006/11/15	11:13:00	1216.3	916.6	234.6	275.3	236.0	220.6	513.0	1361.0	225.7	220.3	198.2	221.8	64.6	65.6	65.2	64.6	229.80	30.19	6937.66
2006/11/15	11:14:00	1217.9	917.1	234.7	274.4	235.5	220.7	513.7	1356.7	226.0	220.5	198.2	221.8	64.4	65.8	65.0	64.4	230.00	30.31	6974.33
2006/11/15	11:15:00	1217.9	916.6	234.7	275.2	235.5	220.8	514.0	1335.5	225.7	220.2	198.4	221.9	64.4	65.7	64.6	64.6	230.10	30.29	6969.73
2006/11/15	11:16:00	1216.8	916.9	234.7	275.7	236.0	220.6	513.8	1350.8	226.0	220.3	198.4	221.9	64.4	65.8	64.6	64.8	230.00	30.29	6966.70

Heat Rise Test
1st Run

Date	Time	TC1	TC2	TC3	TC4	TC5	TC6	TC7	TC8	TC9	TC10	TC11	TC12	TC13	TC14	TC15	TC16	VDC	Amps	Watts
2006/11/15	11:17:00	1216.9	917.8	234.7	275.3	236.0	221.2	514.2	1361.5	226.5	220.6	198.2	221.9	64.3	65.8	65.1	65.0	229.80	30.29	6960.64
2006/11/15	11:18:00	1217.2	914.9	234.7	275.4	235.5	220.7	514.4	1362.9	226.5	220.6	198.4	221.9	64.3	66.2	64.6	65.0	230.00	30.29	6966.70
2006/11/15	11:19:00	1217.3	916.1	234.7	275.3	235.9	220.7	515.2	1342.8	226.2	220.6	198.4	222.0	64.3	65.8	64.8	64.8	230.10	30.30	6975.06
2006/11/15	11:20:00	1217.4	916.1	235.0	275.3	235.7	221.0	515.1	1339.7	226.5	220.5	198.4	222.0	64.1	65.4	65.3	64.6	229.00	30.20	6915.80
2006/11/15	11:21:00	1217.2	917.5	234.9	274.7	235.4	221.0	515.1	1347.8	226.5	220.5	198.5	222.0	64.0	65.4	64.8	65.3	230.00	30.32	6973.60
2006/11/15	11:22:00	1216.1	915.6	234.9	275.3	235.7	220.9	514.7	1362.3	226.0	220.6	198.5	222.1	64.1	65.1	65.0	64.6	229.90	30.28	6961.37
2006/11/15	11:23:00	1215.9	916.3	235.0	275.2	235.5	220.9	513.7	1348.5	226.0	220.5	198.5	222.2	64.2	65.8	65.1	64.2	229.30	30.23	6931.74
2006/11/15	11:24:00	1216.6	915.6	235.0	275.2	235.5	221.1	516.3	1341.5	226.5	220.6	198.7	222.2	64.8	66.0	65.3	64.8	229.60	30.22	6938.51
2006/11/15	11:25:00	1217.6	915.9	235.0	275.7	235.7	221.1	513.8	1337.6	226.1	220.7	198.7	222.3	64.4	65.5	65.4	64.8	229.70	30.29	6957.61
2006/11/15	11:26:00	1216.8	915.9	235.2	276.5	235.7	220.6	513.2	1340.3	226.5	220.8	198.7	222.3	64.3	66.0	65.3	65.0	229.90	30.29	6963.67
2006/11/15	11:27:00	1216.6	916.0	235.1	274.7	235.5	221.2	514.3	1348.7	226.4	220.7	198.7	222.3	63.5	65.7	64.8	65.4	229.50	30.21	6936.22
2006/11/15	11:28:00	1217.0	915.0	235.2	275.8	235.9	221.1	513.1	1345.1	226.1	220.8	198.7	222.3	63.8	64.6	64.8	64.8	229.80	30.27	6956.05
2006/11/15	11:29:00	1216.8	913.7	235.2	275.2	235.5	221.3	514.9	1372.7	226.2	220.7	199.0	222.4	64.0	65.5	65.3	64.1	229.00	30.23	6922.67
2006/11/15	11:30:00	1216.8	916.1	235.1	275.9	235.9	220.8	515.2	1360.8	226.4	220.8	198.8	222.4	63.4	65.6	64.8	64.8	228.80	30.13	6893.74
2006/11/15	11:31:00	1217.9	918.6	235.4	275.4	236.2	220.9	514.9	1360.2	226.9	221.0	198.8	222.4	63.5	65.3	64.8	65.3	228.60	30.16	6894.58
2006/11/15	11:32:00	1216.6	917.1	235.4	275.4	236.0	221.2	515.2	1338.9	226.5	221.2	198.8	222.4	63.5	65.7	64.6	64.6	226.20	29.87	6756.60
2006/11/15	11:33:00	1217.2	917.5	235.4	275.2	235.5	221.3	514.5	1363.6	226.7	221.1	198.8	222.4	63.5	65.5	64.8	65.2	229.30	30.23	6931.74
2006/11/15	11:34:00	1217.3	917.1	235.4	275.3	235.7	221.1	515.5	1361.5	226.7	221.2	199.0	222.5	64.4	66.1	65.1	65.2	228.80	30.20	6909.76
2006/11/15	11:35:00	1217.1	913.6	235.4	275.5	235.7	221.3	515.0	1353.8	226.4	220.9	199.0	222.5	64.3	66.2	65.1	65.0	229.70	30.26	6950.72
2006/11/15	11:36:00	1217.2	917.1	235.5	275.7	236.2	221.2	515.4	1359.0	226.7	221.3	199.2	222.6	63.9	65.2	65.2	64.8	229.30	30.20	6924.86
2006/11/15	11:37:00	1217.5	917.9	235.5	276.0	235.9	221.4	514.7	1383.1	227.0	221.4	199.0	222.6	63.7	65.1	65.1	65.7	226.40	29.98	6787.47
2006/11/15	11:38:00	1217.4	914.8	235.4	275.7	234.7	221.2	513.9	1383.1	226.7	221.3	199.0	222.6	63.1	65.2	64.8	65.2	229.70	30.28	6955.32
2006/11/15	11:39:00	1218.1	916.7	235.5	275.4	235.7	221.1	515.1	1372.7	226.2	221.3	199.0	222.7	63.3	65.3	65.3	65.4	229.90	30.27	6959.07
2006/11/15	11:40:00	1217.1	915.1	235.5	275.2	235.9	221.3	513.8	1381.9	226.2	221.6	199.2	222.7	65.0	65.3	65.2	65.3	230.10	30.31	6974.33
2006/11/15	11:41:00	1217.0	917.6	235.5	275.4	236.0	221.1	515.4	1362.7	226.7	221.7	199.2	222.7	63.9	65.7	65.0	65.1	229.90	30.28	6961.37
2006/11/15	11:42:00	1216.9	918.0	235.5	274.7	236.0	221.3	513.8	1355.7	227.5	221.6	199.2	222.7	63.8	65.7	65.2	65.3	229.90	30.30	6965.97
2006/11/15	11:43:00	1216.6	916.9	235.7	275.5	235.5	221.5	514.2	1368.9	227.2	221.6	199.2	222.8	64.2	65.7	65.5	65.3	229.20	30.23	6928.72
2006/11/15	11:44:00	1216.4	915.7	235.7	275.2	235.2	221.4	516.2	1363.9	227.2	221.5	199.3	222.8	64.6	65.4	65.5	65.4	229.90	30.30	6965.97
2006/11/15	11:45:00	1217.2	916.6	235.7	276.4	235.7	221.3	515.7	1367.7	226.5	221.3	199.5	222.8	65.1	65.1	65.6	64.8	228.80	30.14	6899.05
2006/11/15	11:46:00	1217.0	915.2	235.9	276.0	235.7	221.9	515.2	1372.5	227.2	221.5	199.3	222.8	64.0	65.3	65.6	65.4	229.10	30.18	6921.84
2006/11/15	11:47:00	1217.6	915.2	235.9	275.5	236.0	221.7	514.3	1352.5	226.7	221.6	199.3	222.9	63.8	65.9	65.1	65.0	229.90	30.29	6963.67
2006/11/15	11:48:00	1217.1	915.9	235.7	275.8	236.0	221.4	516.0	1367.2	226.2	221.6	199.7	222.9	63.6	65.6	65.1	64.6	229.90	30.31	6968.27
2006/11/15	11:49:00	1216.6	914.9	235.9	275.3	236.7	221.6	516.2	1353.7	226.7	221.5	199.5	222.9	64.4	65.3	65.4	64.8	229.90	30.29	6963.67
2006/11/15	11:50:00	1216.6	918.1	236.0	275.5	236.0	221.9	516.3	1358.4	227.5	221.5	199.5	223.0	64.1	65.8	65.4	65.2	229.60	30.29	6954.58
2006/11/15	11:51:00	1217.5	912.7	236.0	275.8	236.2	221.8	513.9	1361.0	227.4	221.8	199.5	223.0	65.1	65.3	65.5	64.8	229.50	30.10	6907.95
2006/11/15	11:52:00	1217.4	916.7	236.0	275.7	236.0	221.5	516.8	1349.9	227.5	221.7	199.5	223.0	65.0	65.3	65.7	65.1	229.90	30.31	6968.27
2006/11/15	11:53:00	1216.9	920.4	236.0	275.7	236.3	221.6	515.5	1349.9	227.2	221.8	199.7	223.0	64.4	65.8	65.6	65.3	230.00	30.32	6975.90
2006/11/15	11:54:00	1216.9	914.5	235.9	275.7	236.3	221.7	514.6	1353.9	227.2	221.7	199.5	223.1	65.1	66.2	65.9	65.1	228.70	30.17	6899.88
2006/11/15	11:55:00	1217.1	917.2	236.0	277.3	235.9	221.4	515.2	1365.0	227.2	221.9	199.7	223.1	65.4	65.9	66.2	65.2	230.00	30.32	6975.90
2006/11/15	11:56:00	1217.0	917.9	236.2	276.5	235.9	221.9	515.7	1351.3	227.9	221.9	199.5	223.1	64.6	66.3	65.4	65.6	229.00	30.17	6908.93
2006/11/15	11:57:00	1218.0	915.7	236.0	275.2	236.5	222.1	515.2	1374.0	227.7	222.0	199.5	223.1	64.8	66.4	65.4	65.8	230.00	30.29	6972.76
2006/11/15	11:58:00	1216.8	915.7	236.2	275.7	236.5	222.3	516.5	1369.5	226.9	222.1	199.5	223.1	64.6	66.0	66.0	64.8	228.70	30.18	6902.17
2006/11/15	11:59:00	1217.1	917.2	236.2	275.7	236.2	221.9	515.5	1378.9	227.7	222.1	199.7	223.1	65.0	65.7	65.7	65.2	229.50	30.25	6944.67
2006/11/15	12:00:00	1218.1	916.3	236.3	276.2	236.7	221.9	516.2	1343.4	227.7	222.2	199.7	223.1	64.1	66.1	65.4	65.3	228.90	30.17	6905.91
2006/11/15	12:01:00	1217.7	917.4	236.2	276.3	236.5	221.8	514.6	1353.2	227.7	222.0	199.7	223.1	64.4	66.2	65.3	64.8	229.50	30.28	6949.26
2006/11/15	12:02:00	1217.5	913.9	236.3	275.5	236.8	222.0	515.0	1349.2	227.9	222.1	199.7	223.1	65.1	66.2	65.9	65.6	228.90	30.19	6910.49
2006/11/15	12:03:00	1216.6	915.6	236.5	276.8	236.2	222.1	515.2	1359.7	227.5	222.3	199.8	223.2	65.2	65.9	66.0	66.3	229.30	30.21	6927.15
2006/11/15	12:04:00	1216.6	913.6	236.5	276.2	236.2	222.3	514.6	1379.1	227.7	222.4	199.8	223.2	65.1	66.0	65.9	65.3	230.00	30.32	6973.60
2006/11/15	12:05:00	1217.3	917.8	236.5	276.5	236.2	221.4	515.4	1363.6	227.9	222.3	199.8	223.2	64.6	65.6	65.6	65.6	230.10	30.33	6978.93
2006/11/15	12:06:00	1217.1	916.4	236.5	276.2	236.2	222.4	516.7	1353.9	227.7	222.3	200.0	223.3	64.8	65.6	65.5	65.2	230.10	30.33	6978.93
2006/11/15	12:07:00	1217.1	916.7	236.5	276.4	236.2	222.2	515.5	1370.0	227.5	222.3	199.8	223.3	65.0	66.4	65.3	65.1	230.00	30.30	6969.00
2006/11/15	12:08:00	1217.4	918.8	236.7	276.2	236.2	221.8	515.1	1359.0	228.0	222.5	199.8	223.3	64.8	65.8	65.5	66.0	230.00	30.30	6969.00
2006/11/15	12:09:00	1216.9	917.4	236.5	275.5	236.2	221.6	515.8	1351.0	227.0	222.3	200.2	223.3	64.6	65.7	65.6	65.5	229.30	30.22	6929.45
2006/11/15	12:10:00	1217.5	917.5	236.7	275.5	236.8	222.2	516.7	1346.6	227.5	222.3	200.2	223.4	65.3	65.8	66.1	65.5	230.10	30.18	6944.42
2006/11/15	12:11:00	1217.3	917.1	236.7	276.2	236.5	221.9	514.6	1395.0	227.7	222.2	200.2	223.4	65.2	66.1	65.6	65.4	230.00	30.30	6969.00
2006/11/15	12:12:00	1218.8	916.4	236.7	274.9	236.2	222.3	516.0	1364.4	227.7	222.4	200.2	223.4	65.1	65.8	65.7	65.5	230.10	30.32	6979.66

Heat Rise Test
1st Run

Date	Time	TC1	TC2	TC3	TC4	TC5	TC6	TC7	TC8	TC9	TC10	TC11	TC12	TC13	TC14	TC15	TC16	VDC	Amps	Watts
2006/11/15	12:13:00	1217.0	916.7	236.9	275.8	236.7	222.4	516.0	1383.8	228.0	222.7	200.2	223.5	64.4	66.1	65.6	65.5	230.10	30.32	6978.93
2006/11/15	12:14:00	1217.6	920.2	236.9	276.5	236.8	222.8	515.4	1373.7	227.7	222.5	200.2	223.5	64.6	66.1	65.2	65.6	230.10	30.32	6979.66
2006/11/15	12:15:00	1216.9	917.2	236.7	276.2	236.5	222.0	517.1	1375.5	227.7	222.8	200.2	223.6	64.0	66.3	65.3	65.3	230.10	30.32	6979.66
2006/11/15	12:16:00	1217.0	917.9	236.9	276.6	236.0	222.2	514.9	1374.7	228.2	222.5	200.2	223.6	63.8	66.1	65.2	66.0	229.90	30.29	6963.67
2006/11/15	12:17:00	1216.9	916.9	236.9	276.5	236.3	221.9	515.7	1365.8	227.9	222.9	200.3	223.7	64.0	66.2	65.6	65.0	229.40	30.23	6934.76
2006/11/15	12:18:00	1216.6	918.6	236.9	276.6	236.3	222.0	515.7	1372.5	228.5	222.5	200.3	223.7	65.3	67.1	65.7	65.5	229.70	30.28	6955.32
2006/11/15	12:19:00	1217.2	916.7	237.0	276.2	236.7	222.5	516.7	1377.0	228.2	222.9	200.3	223.8	65.3	66.6	65.7	66.0	229.80	30.29	6960.64
2006/11/15	12:20:00	1216.9	916.1	237.0	275.8	236.7	222.1	516.0	1392.3	228.0	222.8	200.5	223.8	65.4	66.6	65.7	65.4	230.10	30.31	6976.63
2006/11/15	12:21:00	1217.5	917.4	237.2	277.1	236.5	222.6	516.2	1368.0	228.8	222.9	200.5	223.8	65.2	65.9	65.7	65.9	229.70	30.24	6946.13
2006/11/15	12:22:00	1217.3	914.6	237.2	275.8	236.8	222.7	515.8	1389.1	227.9	223.0	200.3	223.9	65.1	66.4	65.9	65.9	229.70	30.28	6955.32
2006/11/15	12:23:00	1218.3	916.4	237.0	275.3	236.9	222.5	515.2	1385.1	228.0	223.0	200.5	223.9	64.6	65.8	65.9	64.8	229.90	30.31	6968.27
2006/11/15	12:24:00	1217.6	915.2	237.2	275.7	236.5	222.5	515.2	1375.7	228.8	222.8	200.5	223.9	64.4	65.9	65.7	65.5	229.50	30.25	6942.38
2006/11/15	12:25:00	1218.1	916.4	237.2	275.7	236.8	222.6	515.7	1394.2	228.7	223.0	200.5	223.9	65.6	66.4	66.6	65.5	229.50	30.26	6944.67
2006/11/15	12:26:00	1217.3	917.1	237.2	276.7	236.0	222.5	516.3	1368.6	228.8	223.4	200.5	223.9	65.1	66.4	65.9	65.4	229.90	30.31	6972.87
2006/11/15	12:27:00	1217.0	919.1	237.2	275.8	236.7	222.5	516.2	1369.0	228.5	223.2	200.7	224.0	64.8	66.4	66.2	65.6	229.70	30.25	6948.43
2006/11/15	12:28:00	1217.7	920.0	237.2	276.3	237.0	222.7	516.2	1390.0	228.7	223.4	200.7	224.0	65.3	66.8	66.1	65.6	230.10	30.30	6974.33
2006/11/15	12:29:00	1217.0	916.4	237.3	276.0	237.2	222.8	515.8	1389.5	228.5	223.2	200.7	224.0	65.2	66.6	66.0	65.8	230.10	30.32	6978.93
2006/11/15	12:30:00	1216.6	917.6	237.2	276.7	236.7	222.7	516.5	1387.3	228.5	223.1	200.7	224.0	65.2	66.4	65.8	65.6	229.30	30.23	6931.74
2006/11/15	12:31:00	1217.6	915.8	237.3	276.5	236.7	222.8	515.7	1381.3	229.0	223.3	200.8	224.1	65.2	66.2	66.6	65.6	229.90	30.31	6968.27
2006/11/15	12:32:00	1216.6	917.4	237.5	276.6	236.7	223.0	516.7	1365.7	229.0	223.3	200.8	224.1	64.8	65.6	65.9	65.8	229.00	30.20	6915.80
2006/11/15	12:33:00	1217.6	917.7	237.4	276.9	237.3	223.0	517.3	1388.7	228.3	223.4	200.8	224.1	65.5	66.1	65.9	65.1	229.40	30.15	6927.88
2006/11/15	12:34:00	1217.0	917.1	237.4	277.9	237.2	222.8	516.5	1369.7	228.5	223.3	200.8	224.1	65.2	66.3	65.4	65.5	230.10	30.27	6968.15
2006/11/15	12:35:00	1217.0	914.6	237.3	276.7	236.5	223.1	515.5	1399.2	229.2	223.0	201.0	224.2	65.3	66.8	66.3	65.7	228.80	30.14	6896.03
2006/11/15	12:36:00	1217.0	915.7	237.6	276.7	236.2	222.7	515.4	1377.7	228.7	223.5	201.0	224.3	65.1	65.8	66.3	65.1	229.70	30.27	6953.02
2006/11/15	12:37:00	1217.6	916.1	237.6	276.9	236.9	222.8	516.6	1376.6	228.2	223.7	201.0	224.3	64.6	66.2	65.7	65.2	230.10	30.32	6978.93
2006/11/15	12:38:00	1216.9	915.2	237.6	276.7	237.2	222.7	516.2	1376.8	229.0	223.7	201.0	224.4	65.1	66.6	65.9	65.4	229.80	30.18	6935.36
2006/11/15	12:39:00	1217.3	915.2	237.8	277.0	237.3	223.3	516.2	1377.4	229.5	223.3	201.0	224.4	65.2	65.7	66.4	65.7	229.70	30.18	6935.36
2006/11/15	12:40:00	1216.6	917.1	237.7	276.8	237.2	223.5	515.5	1381.0	229.3	223.6	201.0	224.4	65.5	66.2	65.9	65.9	229.70	30.27	6953.02
2006/11/15	12:41:00	1217.9	918.6	237.7	276.3	236.5	222.7	517.9	1388.3	229.2	223.8	201.0	224.4	65.6	66.8	66.6	65.6	229.70	30.20	6936.94
2006/11/15	12:42:00	1217.9	915.8	237.8	276.3	237.3	223.4	516.3	1390.9	229.3	223.8	201.2	224.4	65.5	66.8	66.4	65.5	229.80	30.28	6960.64
2006/11/15	12:43:00	1217.7	919.1	237.9	276.9	237.2	223.0	516.2	1393.0	229.0	223.9	201.2	224.4	64.3	66.1	65.9	65.6	229.70	30.16	6948.86
2006/11/15	12:44:00	1216.5	918.6	237.9	276.2	237.2	223.1	516.9	1371.6	229.2	223.9	201.2	224.4	65.5	66.4	66.0	66.0	229.70	30.28	6955.32
2006/11/15	12:45:00	1217.6	920.4	237.7	276.0	237.4	223.4	515.8	1343.2	228.7	223.8	201.2	224.5	65.6	66.6	66.2	65.5	229.80	30.26	6958.34
2006/11/15	12:46:00	1217.4	916.3	238.0	275.9	236.7	223.4	516.0	1393.2	228.7	223.8	201.3	224.5	65.6	65.4	66.4	65.8	229.20	30.23	6928.72
2006/11/15	12:47:00	1217.7	912.6	237.8	276.0	237.3	223.2	516.2	1395.5	229.5	224.0	201.2	224.5	65.5	66.6	66.3	66.3	229.40	30.22	6932.47
2006/11/15	12:48:00	1217.4	915.9	238.0	276.7	237.5	223.0	514.7	1380.8	229.5	223.9	201.3	224.5	65.8	66.6	66.3	66.2	229.20	30.24	6931.01
2006/11/15	12:49:00	1217.9	916.6	238.1	276.7	236.9	223.5	516.9	1383.7	229.5	224.1	201.2	224.5	66.3	66.8	66.8	65.7	229.40	30.29	6968.27
2006/11/15	12:50:00	1217.9	918.1	238.1	276.9	237.0	223.5	517.3	1395.0	229.6	223.9	201.3	224.5	65.9	66.6	66.4	66.0	229.40	30.23	6934.76
2006/11/15	12:51:00	1218.2	917.9	238.2	277.6	237.5	223.6	516.5	1398.5	229.5	223.9	201.3	224.6	66.1	66.6	67.1	65.8	230.00	30.25	6957.50
2006/11/15	12:52:00	1217.5	916.6	238.1	277.4	236.9	223.5	516.2	1361.5	229.7	224.0	201.3	224.7	65.8	67.1	66.4	66.2	230.10	30.27	6976.63
2006/11/15	12:53:00	1217.9	916.1	238.2	276.2	237.6	223.8	516.5	1390.1	229.7	224.2	201.5	224.7	65.7	66.8	66.2	66.6	230.00	30.31	6976.63
2006/11/15	12:54:00	1216.6	919.3	238.3	277.3	237.4	223.6	517.1	1378.0	229.2	224.3	201.5	224.7	64.8	66.8	65.7	65.5	228.60	30.17	6896.86
2006/11/15	12:55:00	1216.5	918.3	238.4	277.5	237.2	223.5	517.0	1377.5	229.2	224.3	201.7	224.8	65.1	66.8	65.8	65.4	229.90	30.28	6961.37
2006/11/15	12:56:00	1216.6	916.1	238.4	276.2	237.2	223.8	517.9	1404.5	230.0	224.4	201.7	224.9	65.1	67.0	66.1	65.9	229.30	30.22	6929.45
2006/11/15	12:57:00	1216.6	917.6	238.4	277.3	237.5	223.0	518.3	1383.3	230.0	224.4	201.7	224.9	64.4	67.1	66.3	65.8	230.10	30.30	6976.63
2006/11/15	12:58:00	1217.3	918.0	238.5	277.7	237.3	223.6	517.2	1390.0	230.0	224.6	201.7	225.0	65.3	66.6	66.6	66.2	228.60	30.19	6901.43
2006/11/15	12:59:00	1216.9	919.0	238.3	277.6	237.4	223.9	516.8	1395.2	229.8	224.6	201.8	225.0	65.7	66.3	66.6	65.8	229.60	30.25	6945.40
2006/11/15	13:00:00	1216.8	914.1	238.6	278.1	237.8	223.7	516.6	1397.5	229.7	224.3	201.7	225.0	65.9	66.0	66.6	66.2	229.80	30.25	6951.45
2006/11/15	13:01:00	1217.2	919.3	238.6	277.2	237.9	224.0	515.8	1373.0	229.7	224.7	202.0	225.1	65.5	65.9	66.2	66.1	229.30	30.30	6947.79
2006/11/15	13:02:00	1216.9	913.4	238.6	277.4	237.6	223.8	516.5	1393.4	229.8	224.6	201.8	225.1	65.5	66.6	66.1	66.0	230.00	30.31	6974.33
2006/11/15	13:03:00	1217.7	919.0	238.7	277.4	237.7	223.8	517.5	1404.2	230.0	224.6	202.0	225.1	65.3	66.6	66.6	66.0	230.10	30.31	6974.33
2006/11/15	13:04:00	1218.0	917.7	238.6	276.6	237.2	223.5	516.7	1396.9	230.1	224.6	201.8	225.1	65.2	67.1	66.2	66.1	230.00	30.32	6973.60
2006/11/15	13:05:00	1217.3	918.0	238.6	277.1	237.5	223.4	517.6	1376.8	230.0	224.7	201.8	225.1	65.4	67.0	66.6	66.0	230.00	30.32	6978.93
2006/11/15	13:06:00	1216.9	915.2	238.8	277.3	237.7	223.7	516.7	1400.1	230.0	224.7	202.0	225.1	65.8	67.3	66.8	66.0	230.00	30.32	6976.63
2006/11/15	13:07:00	1218.1	917.4	238.8	276.9	237.3	224.0	517.6	1401.9	230.1	224.7	202.0	225.2	66.0	66.4	66.6	66.6	230.20	30.33	6981.97
2006/11/15	13:08:00	1217.7	916.7	238.7	277.1	237.9	223.6	517.1	1400.2	230.1	224.8	202.0	225.2	65.2	66.6	66.0	66.2	230.10	30.30	6972.03

Heat Rise Test
1st Run

Date	Time	TC1	TC2	TC3	TC4	TC5	TC6	TC7	TC8	TC9	TC10	TC11	TC12	TC13	TC14	TC15	TC16	VDC	Amps	Watts
2006/11/15	13:09:00	1217.2	919.0	238.7	277.6	237.4	223.8	517.1	1407.4	229.8	224.8	202.0	225.2	65.3	66.6	66.0	66.3	230.20	30.33	6981.97
2006/11/15	13:10:00	1217.2	920.1	238.9	276.4	236.9	223.8	516.9	1404.9	229.8	224.5	202.0	225.2	65.8	66.8	66.8	66.1	230.20	30.33	6981.97
2006/11/15	13:11:00	1217.9	920.5	238.9	277.8	237.4	223.6	516.8	1398.0	230.0	224.8	202.2	225.2	65.1	66.2	66.2	66.2	230.20	30.33	6981.97
2006/11/15	13:12:00	1217.5	918.9	239.0	277.2	237.8	223.7	517.7	1394.5	230.1	224.9	202.2	225.2	64.3	66.2	66.3	66.3	230.20	30.33	6981.97
2006/11/15	13:13:00	1217.0	919.1	238.9	277.4	236.9	223.9	518.5	1390.7	229.5	224.5	202.2	225.2	64.8	65.9	66.0	65.4	230.20	30.33	6981.97
2006/11/15	13:14:00	1216.2	919.4	239.0	277.9	237.0	224.1	516.9	1385.7	229.8	224.4	202.2	225.2	65.1	65.3	66.8	65.3	230.20	30.32	6979.66
2006/11/15	13:15:00	1216.9	919.0	239.0	277.5	237.6	224.1	517.1	1405.9	230.2	224.5	202.2	225.2	64.8	65.7	65.9	65.1	230.20	30.33	6981.97
2006/11/15	13:16:00	1217.4	918.1	239.0	275.8	237.6	223.7	518.0	1396.0	230.2	224.5	202.2	225.2	64.6	65.9	65.9	65.5	230.20	30.33	6981.97
2006/11/15	13:17:00	1216.9	920.1	238.9	277.1	237.7	223.7	517.7	1400.0	230.2	224.7	202.2	225.2	64.4	65.7	65.2	65.2	230.20	30.33	6981.97
2006/11/15	13:18:00	1217.0	915.4	238.9	277.4	238.1	224.0	517.7	1383.6	229.7	224.9	202.2	225.2	64.8	64.8	65.2	64.6	230.20	30.33	6981.97
2006/11/15	13:19:00	1217.4	917.2	239.0	276.8	237.0	223.7	516.5	1401.2	230.3	224.7	202.2	225.2	64.3	65.7	65.5	64.3	230.20	30.33	6981.97
2006/11/15	13:20:00	1216.3	918.7	239.0	277.0	236.7	223.2	517.9	1399.4	230.4	224.6	202.0	225.2	64.1	66.3	65.2	65.6	230.20	30.32	6979.66
2006/11/15	13:21:00	1217.2	916.6	238.8	276.8	237.8	223.7	517.3	1396.6	229.3	224.5	202.0	225.2	64.0	64.8	65.0	65.0	230.20	30.33	6981.97
2006/11/15	13:22:00	1217.2	918.8	239.0	276.3	237.6	224.1	517.1	1397.2	230.4	224.9	202.2	225.2	64.0	64.2	65.2	65.1	230.10	30.31	6974.33
2006/11/15	13:23:00	1217.7	919.4	239.1	277.7	237.6	223.6	517.8	1409.9	230.0	224.9	202.2	225.2	64.0	65.1	65.4	64.8	230.10	30.32	6976.63
2006/11/15	13:24:00	1218.1	917.9	239.1	276.6	238.1	224.2	516.8	1407.3	230.1	224.7	202.2	225.2	63.4	65.1	65.7	64.8	230.20	30.32	6979.66
2006/11/15	13:25:00	1217.4	919.0	239.3	277.3	237.2	223.4	517.4	1410.9	229.2	224.5	202.3	225.4	65.0	64.3	65.0	64.6	230.10	30.33	6978.93
2006/11/15	13:26:00	1217.7	919.1	239.2	277.1	238.0	223.8	518.6	1410.7	229.5	224.5	202.3	225.4	64.4	64.6	65.6	64.0	230.20	30.33	6981.97
2006/11/15	13:27:00	1216.9	914.4	239.3	277.3	237.5	224.2	518.7	1417.7	230.0	224.9	202.2	225.4	64.2	64.8	65.6	65.2	230.20	30.33	6981.97
2006/11/15	13:28:00	1217.0	918.7	239.4	278.3	237.3	224.3	517.5	1398.3	230.1	225.2	202.3	225.4	63.4	64.3	64.6	65.2	230.20	30.33	6981.97
2006/11/15	13:29:00	1217.3	921.0	239.4	277.7	237.3	224.1	517.3	1402.0	230.2	225.1	202.5	225.5	63.5	64.6	64.4	64.6	230.20	30.33	6981.97
2006/11/15	13:30:00	1217.2	921.1	239.4	277.3	237.8	224.2	518.5	1396.2	230.0	225.1	202.7	225.6	65.0	64.8	64.6	64.6	230.20	30.33	6981.97
2006/11/15	13:31:00	1216.9	915.5	239.2	278.4	237.4	224.3	519.5	1398.5	230.3	225.1	202.7	225.6	65.2	64.3	64.6	65.3	230.20	30.33	6981.97
2006/11/15	13:32:00	1216.1	918.5	239.5	277.5	237.9	224.6	518.7	1392.5	229.8	225.2	202.5	225.6	65.9	64.8	64.3	65.0	230.20	30.33	6981.97
2006/11/15	13:33:00	1216.8	915.6	239.6	278.3	237.8	224.2	518.5	1384.7	229.7	224.8	202.5	225.6	65.2	64.3	64.6	63.8	230.20	30.33	6981.97
2006/11/15	13:34:00	1216.5	919.3	239.6	278.2	237.3	224.3	518.9	1390.4	230.5	224.9	202.5	225.6	63.2	64.6	64.6	64.4	230.20	30.33	6981.97
2006/11/15	13:35:00	1217.2	916.9	239.6	278.3	237.4	224.2	519.2	1406.0	230.2	225.2	202.5	225.6	63.2	64.6	64.8	65.4	230.20	30.33	6981.97
2006/11/15	13:36:00	1217.6	918.2	239.7	277.3	237.7	224.0	518.5	1410.7	230.2	225.1	202.7	225.7	63.2	63.9	65.2	64.6	230.20	30.33	6981.97
2006/11/15	13:37:00	1217.3	915.9	239.6	278.0	237.7	224.4	517.7	1392.8	230.7	225.2	202.7	225.7	63.9	64.4	65.4	64.6	230.20	30.33	6981.97
2006/11/15	13:38:00	1216.9	913.7	239.7	277.8	237.7	224.6	519.0	1386.6	230.1	224.6	202.2	225.7	64.1	64.6	64.8	65.2	230.20	30.33	6981.97
2006/11/15	13:39:00	1216.6	918.3	239.7	277.7	237.9	224.6	519.2	1383.9	230.4	225.2	202.5	225.7	64.0	64.6	65.4	65.4	230.20	30.32	6979.66
2006/11/15	13:40:00	1218.6	915.2	239.7	276.8	238.1	224.4	518.4	1423.7	230.2	225.2	202.7	225.7	65.5	64.4	66.1	65.0	230.10	30.33	6978.93
2006/11/15	13:41:00	1218.0	916.9	239.6	277.8	238.7	224.8	519.0	1412.9	230.6	225.2	202.7	225.7	64.8	64.8	65.6	65.2	230.20	30.32	6979.66
2006/11/15	13:42:00	1218.0	919.1	239.9	277.7	238.4	224.9	518.2	1409.3	230.3	225.2	202.7	225.7	65.0	64.8	65.6	65.1	230.00	30.31	6971.30
2006/11/15	13:43:00	1217.4	915.3	239.8	278.4	238.5	224.8	518.4	1412.7	230.9	225.4	202.7	225.7	64.6	65.7	66.3	65.5	230.00	30.31	6971.30
2006/11/15	13:44:00	1217.3	917.6	239.8	278.5	237.9	224.8	518.6	1407.1	230.8	225.2	202.7	225.7	64.6	64.8	66.8	65.7	229.30	30.27	6940.91
2006/11/15	13:45:00	1217.2	918.7	240.0	277.6	238.2	224.8	516.8	1415.4	230.9	225.2	202.7	225.9	65.5	65.0	66.4	65.9	230.10	30.32	6976.63
2006/11/15	13:46:00	1217.6	916.0	240.0	277.5	238.1	224.6	518.6	1413.6	230.7	225.4	202.7	225.7	64.4	66.6	66.3	66.1	223.10	29.55	6592.60
2006/11/15	13:47:00	1217.6	916.0	239.9	278.6	238.7	224.6	518.2	1416.7	230.9	225.6	202.7	225.9	66.1	66.3	66.6	66.0	229.70	30.26	6950.72
2006/11/15	13:48:00	1217.1	920.2	240.0	277.4	238.8	225.2	516.8	1427.0	230.3	225.7	202.7	225.9	65.9	66.6	67.0	66.0	229.90	30.29	6963.67
2006/11/15	13:49:00	1216.6	919.6	240.1	278.1	238.6	224.9	518.0	1415.2	230.8	225.9	202.7	225.9	64.6	65.8	66.3	66.1	230.10	30.30	6972.03
2006/11/15	13:50:00	1217.0	919.3	240.2	278.2	238.3	225.0	518.6	1394.1	230.5	226.0	203.0	226.0	65.0	66.1	66.8	66.1	229.10	30.21	6921.11
2006/11/15	13:51:00	1216.4	917.4	240.3	278.3	238.6	225.1	518.7	1391.9	230.9	226.0	203.0	226.1	65.9	66.8	66.6	66.3	229.80	30.29	6960.64
2006/11/15	13:52:00	1217.3	917.2	240.3	277.8	238.8	225.2	518.6	1397.9	231.3	226.2	203.0	226.1	65.9	66.1	67.0	66.3	229.70	30.28	6955.32
2006/11/15	13:53:00	1217.3	917.6	240.4	278.7	238.7	225.2	518.2	1388.3	231.3	226.2	203.0	226.1	66.4	66.1	67.3	66.8	230.10	30.30	6972.03
2006/11/15	13:54:00	1218.0	917.4	240.4	278.0	239.2	225.6	517.5	1410.2	231.5	226.2	203.0	226.2	66.6	66.8	67.7	67.0	229.40	30.23	6934.76
2006/11/15	13:55:00	1216.9	916.6	240.4	278.4	238.0	225.4	519.4	1411.2	231.6	226.4	203.0	226.2	64.6	66.4	66.6	66.6	229.90	30.32	6970.57
2006/11/15	13:56:00	1216.8	918.0	240.3	277.8	238.4	225.2	519.7	1419.1	231.0	226.4	203.0	226.2	64.6	66.4	66.4	65.7	230.00	30.18	6965.54
2006/11/15	13:57:00	1216.9	916.3	240.4	278.3	238.3	225.5	518.6	1414.4	230.7	226.1	203.2	226.2	65.8	65.9	66.8	65.7	229.90	30.29	6968.27
2006/11/15	13:58:00	1217.2	917.5	240.6	277.2	238.6	225.6	519.4	1407.2	231.6	226.4	203.1	226.2	66.2	66.8	66.6	66.8	229.70	30.29	6957.61
2006/11/15	13:59:00	1217.2	917.7	240.7	278.2	239.0	225.6	519.2	1410.7	231.5	226.5	203.0	226.2	66.1	66.8	66.8	66.8	229.30	30.19	6922.57
2006/11/15	14:00:00	1216.4	918.4	240.8	278.2	239.1	225.4	519.0	1410.6	231.8	226.7	203.1	226.2	65.9	67.0	66.8	66.6	230.10	30.33	6978.93
2006/11/15	14:01:00	1216.3	918.9	240.7	278.9	238.9	225.2	518.1	1409.3	231.6	226.7	203.2	226.4	65.3	66.6	66.6	66.8	229.40	30.26	6941.64
2006/11/15	14:02:00	1217.3	917.1	240.7	278.4	239.1	225.5	519.2	1411.4	230.8	226.5	203.3	226.4	66.0	66.2	66.3	66.4	229.30	30.25	6936.33
2006/11/15	14:03:00	1217.0	919.4	240.8	278.3	239.4	225.7	518.7	1400.1	231.4	226.5	203.2	226.4	66.6	66.8	67.1	66.3	230.10	30.22	6953.62
2006/11/15	14:04:00	1217.6	916.4	240.9	277.5	238.9	225.6	519.0	1426.2	232.1	226.7	203.2	226.4	65.8	66.8	67.3	66.6	230.00	30.31	6975.90

Heat Rise Test
1st Run

Date	Time	TC1	TC2	TC3	TC4	TC5	TC6	TC7	TC8	TC9	TC10	TC11	TC12	TC13	TC14	TC15	TC16	VDC	Amps	Watts
2006/11/15	14:05:00	1217.4	918.6	240.9	278.2	239.1	225.5	517.6	1421.2	232.0	226.7	203.3	226.4	65.9	67.1	67.0	66.6	230.10	30.19	6949.74
2006/11/15	14:06:00	1216.8	919.4	240.8	278.6	239.1	225.4	517.8	1406.5	231.6	226.7	203.5	226.5	66.1	66.4	67.2	66.8	230.20	30.32	6979.66
2006/11/15	14:07:00	1217.3	919.3	240.8	278.7	238.8	225.9	519.4	1396.7	231.8	226.7	203.3	226.5	65.7	66.6	66.8	66.8	230.10	30.32	6976.63
2006/11/15	14:08:00	1217.2	917.9	240.9	278.5	238.9	225.7	518.9	1409.8	231.9	226.9	203.3	226.5	65.9	66.8	67.0	66.8	229.70	30.30	6959.91
2006/11/15	14:09:00	1216.9	917.4	241.1	278.6	239.1	225.9	518.2	1417.3	231.8	226.7	203.5	226.5	66.0	67.2	66.8	66.8	230.20	30.32	6981.97
2006/11/15	14:10:00	1216.6	916.7	241.1	278.6	238.5	225.6	519.4	1430.6	231.6	227.0	203.3	226.5	66.0	67.0	66.8	66.4	230.00	30.31	6971.30
2006/11/15	14:11:00	1215.9	918.0	241.1	278.0	239.3	225.4	518.9	1417.2	232.1	226.7	203.3	226.5	65.9	66.3	66.6	66.8	230.10	30.31	6977.36
2006/11/15	14:12:00	1217.1	918.4	240.9	277.7	238.7	225.6	519.5	1432.5	231.8	227.0	203.5	226.5	65.9	67.0	66.8	66.6	229.50	30.25	6942.38
2006/11/15	14:13:00	1216.9	916.1	241.2	278.4	238.9	225.7	518.7	1323.6	231.7	226.5	203.5	226.5	66.3	67.0	66.6	66.2	229.60	30.24	6943.10
2006/11/15	14:14:00	1217.0	919.3	241.3	278.9	239.3	225.7	517.8	1332.5	231.4	227.2	203.5	226.5	66.4	66.8	66.8	66.2	229.60	30.29	6957.61
2006/11/15	14:15:00	1217.2	918.2	241.3	278.8	239.4	225.4	519.0	1328.2	232.1	227.2	203.5	226.7	66.1	66.6	67.3	67.1	229.40	30.23	6934.76
2006/11/15	14:16:00	1217.3	919.4	241.3	278.6	237.8	225.7	519.0	1334.0	232.1	227.2	203.5	226.7	65.2	66.6	66.6	66.8	229.40	30.23	6934.76
2006/11/15	14:17:00	1217.9	918.5	241.3	278.9	238.5	225.7	520.2	1346.6	231.7	227.0	203.7	226.7	65.9	66.6	66.1	66.4	229.80	30.29	6960.64
2006/11/15	14:18:00	1216.6	917.8	241.3	278.8	239.6	226.2	518.9	1332.4	232.1	227.2	203.7	226.7	66.1	67.3	66.8	66.6	229.90	30.28	6961.37
2006/11/15	14:19:00	1216.4	918.1	241.4	278.9	239.0	226.2	519.2	1336.1	231.4	227.2	203.6	226.7	65.6	66.8	66.2	66.6	230.10	30.32	6976.63
2006/11/15	14:20:00	1217.5	919.6	241.4	279.4	239.2	226.2	518.3	1337.6	232.1	227.5	203.7	226.7	65.7	66.2	66.8	67.0	229.80	30.27	6956.05
2006/11/15	14:21:00	1218.0	916.7	241.4	278.8	238.8	226.2	519.7	1359.7	232.5	227.5	203.7	226.9	65.8	66.6	67.0	66.6	230.20	30.32	6981.97
2006/11/15	14:22:00	1217.9	918.7	241.6	278.8	239.0	226.2	519.2	1358.9	232.5	227.7	203.7	227.0	66.3	66.8	66.8	66.6	230.20	30.31	6979.66
2006/11/15	14:23:00	1217.7	920.8	241.6	278.6	239.2	225.9	519.7	1356.0	232.0	227.7	203.7	227.0	66.0	67.3	66.4	66.0	230.20	30.32	6979.66
2006/11/15	14:24:00	1217.9	916.6	241.6	278.4	239.5	226.2	519.0	1355.4	232.2	227.2	203.8	227.0	66.2	67.2	67.0	66.0	230.20	30.32	6979.66
2006/11/15	14:25:00	1218.8	919.1	241.7	279.1	239.2	226.2	520.6	1376.8	232.6	227.5	203.8	227.0	66.3	67.2	67.2	67.1	229.40	30.30	6950.82
2006/11/15	14:26:00	1217.9	917.7	241.7	278.4	238.9	226.1	517.3	1367.0	232.6	227.5	203.8	227.0	65.5	66.6	66.6	67.0	230.00	30.29	6973.60
2006/11/15	14:27:00	1218.0	917.8	241.6	278.5	238.5	226.1	519.8	1368.8	232.6	227.5	204.0	227.2	66.6	67.2	66.6	67.0	230.00	30.26	6959.80
2006/11/15	14:28:00	1217.6	918.7	241.7	278.3	239.1	226.2	518.2	1365.9	232.6	227.5	204.1	227.0	67.3	67.2	66.8	67.2	229.70	30.27	6957.61
2006/11/15	14:29:00	1217.6	918.9	241.7	278.4	239.3	226.1	519.5	1380.7	232.3	227.5	204.1	227.0	65.8	66.6	67.0	67.0	230.00	30.26	6966.70
2006/11/15	14:30:00	1217.9	920.1	241.7	278.1	240.0	225.7	517.9	1378.5	232.8	227.7	204.1	227.0	65.0	66.6	66.8	67.1	229.10	30.20	6918.82
2006/11/15	14:31:00	1217.6	915.3	241.7	278.9	238.9	226.2	520.0	1369.5	232.6	227.7	204.0	227.0	65.3	66.8	66.8	66.8	229.30	30.23	6931.74
2006/11/15	14:32:00	1218.0	920.4	241.7	278.3	239.3	225.9	520.5	1385.2	232.4	227.5	204.0	227.0	65.7	66.6	67.2	67.2	229.90	30.29	6963.67
2006/11/15	14:33:00	1218.0	918.1	241.7	278.7	239.3	226.2	519.8	1392.1	232.4	227.9	204.0	227.0	65.9	67.3	67.3	67.3	228.10	30.04	6852.12
2006/11/15	14:34:00	1217.4	918.1	241.7	278.7	239.3	226.5	519.5	1368.4	232.7	227.7	204.0	227.0	65.5	67.3	67.0	66.4	229.50	30.23	6937.79
2006/11/15	14:35:00	1217.3	917.5	241.9	278.5	238.9	226.2	519.2	1394.7	232.5	227.9	204.0	227.0	65.6	66.6	67.0	66.6	229.60	30.20	6933.92
2006/11/15	14:36:00	1216.6	919.3	241.7	279.4	239.1	226.4	520.5	1369.2	232.8	227.9	204.2	227.2	65.7	66.4	67.2	67.2	230.00	30.31	6971.30
2006/11/15	14:37:00	1217.2	918.2	241.9	279.4	238.6	226.4	519.2	1383.2	232.7	228.0	204.2	227.2	67.2	66.1	67.1	67.2	229.60	30.24	6943.10
2006/11/15	14:38:00	1218.0	921.0	241.9	278.2	238.6	226.4	520.2	1388.0	232.5	227.7	204.3	227.2	67.1	66.6	66.6	66.6	229.80	30.29	6960.64
2006/11/15	14:39:00	1217.1	919.1	241.9	279.3	239.2	226.4	519.0	1375.2	232.9	227.9	204.2	227.2	65.6	67.3	67.3	66.4	229.50	30.24	6940.08
2006/11/15	14:40:00	1217.6	918.4	241.9	278.5	239.2	226.5	519.0	1387.5	232.8	227.7	204.1	227.2	66.2	67.0	67.2	66.8	229.60	30.27	6949.99
2006/11/15	14:41:00	1217.6	916.6	241.9	278.6	239.8	226.5	520.5	1401.7	232.6	227.7	204.1	227.2	66.3	67.0	67.3	66.3	229.40	30.25	6943.94
2006/11/15	14:42:00	1217.6	921.8	242.1	278.4	239.3	226.2	518.4	1405.5	233.1	227.9	204.3	227.2	65.9	67.6	67.1	66.8	228.90	30.17	6905.91
2006/11/15	14:43:00	1217.2	918.0	242.1	278.9	239.3	226.7	519.2	1398.3	232.7	228.0	204.3	227.4	65.8	67.5	66.6	66.4	230.10	30.31	6976.63
2006/11/15	14:44:00	1217.1	920.0	241.9	278.7	239.2	226.4	519.2	1396.6	232.5	228.0	204.3	227.4	66.1	66.6	66.8	66.1	230.00	30.32	6973.60
2006/11/15	14:45:00	1217.4	918.4	242.1	278.9	239.5	226.4	519.7	1382.7	233.2	228.2	204.3	227.5	66.4	67.2	67.1	67.2	229.40	30.23	6934.76
2006/11/15	14:46:00	1218.1	919.9	241.9	277.9	240.3	226.7	519.7	1383.9	232.7	228.2	204.3	227.5	65.8	67.1	66.8	66.3	229.30	30.20	6924.86
2006/11/15	14:47:00	1217.9	918.2	242.1	279.7	239.4	226.5	520.5	1384.7	233.0	228.2	204.3	227.4	66.0	67.6	66.8	66.2	229.90	30.18	6941.40
2006/11/15	14:48:00	1217.6	917.6	242.2	279.7	239.6	226.7	520.3	1367.7	233.0	228.0	204.5	227.4	65.6	66.0	66.8	67.1	229.70	30.29	6957.61
2006/11/15	14:49:00	1217.3	918.6	242.2	279.7	238.8	226.5	519.7	1373.5	233.4	228.0	204.5	227.5	65.6	66.2	66.6	66.3	229.70	30.29	6957.61
2006/11/15	14:50:00	1217.1	919.9	242.2	278.1	240.0	226.4	521.0	1377.7	233.5	228.2	204.5	227.5	65.6	67.2	66.6	66.2	230.10	30.32	6976.63
2006/11/15	14:51:00	1217.5	919.1	242.2	278.6	239.6	226.2	520.0	1375.0	233.4	228.5	204.6	227.5	65.2	67.3	66.8	67.0	228.90	30.19	6910.49
2006/11/15	14:52:00	1217.6	921.1	242.4	278.9	240.0	227.0	520.0	1377.7	233.2	228.5	204.7	227.5	66.1	67.2	66.6	67.3	229.60	30.22	6938.51
2006/11/15	14:53:00	1217.6	917.6	242.4	278.1	240.6	226.9	519.7	1387.9	233.7	228.5	204.5	227.7	66.6	67.3	67.5	66.8	230.00	30.27	6971.18
2006/11/15	14:54:00	1217.9	919.3	242.4	278.5	240.1	226.7	519.4	1380.6	233.5	228.3	204.6	227.7	66.8	67.2	67.5	66.8	229.30	30.22	6929.45
2006/11/15	14:55:00	1217.0	918.7	242.5	278.8	238.9	226.2	520.1	1388.7	233.6	228.5	204.6	227.7	65.4	67.2	67.0	67.2	230.10	30.30	6972.03
2006/11/15	14:56:00	1216.8	918.9	242.4	279.4	239.1	226.2	519.5	1397.1	233.1	228.5	204.6	227.7	65.5	67.2	67.2	67.2	230.00	30.28	6970.46
2006/11/15	14:57:00	1216.6	918.2	242.7	279.9	238.8	226.5	519.0	1393.4	232.9	228.5	205.0	227.9	67.1	67.3	67.3	67.0	229.20	30.32	6953.93
2006/11/15	14:58:00	1218.0	918.9	242.7	279.2	239.1	226.7	519.8	1413.0	233.0	228.5	204.7	227.9	67.5	66.4	67.1	67.2	229.00	30.11	6901.21
2006/11/15	14:59:00	1216.6	917.5	242.5	278.7	239.6	226.5	520.1	1392.4	233.7	228.7	204.8	227.9	67.5	66.6	67.3	67.2	229.70	30.21	6939.24
2006/11/15	15:00:00	1217.5	921.1	242.4	278.8	240.6	226.9	520.5	1404.7	233.4	228.7	204.8	227.7	67.1	66.1	67.5	67.0	229.80	30.23	6960.64

Heat Rise Test
1st Run

Date	Time	TC1	TC2	TC3	TC4	TC5	TC6	TC7	TC8	TC9	TC10	TC11	TC12	TC13	TC14	TC15	TC16	VDC	Amps	Watts
2006/11/15	15:01:00	1216.6	920.1	242.4	279.9	239.8	227.2	519.2	1400.2	233.8	228.7	204.7	227.7	66.4	67.2	67.5	67.2	230.00	30.30	6971.30
2006/11/15	15:02:00	1216.9	916.9	242.5	279.4	239.7	226.7	520.9	1407.8	233.5	228.7	204.8	227.7	67.0	67.3	67.5	67.2	229.50	30.25	6945.40
2006/11/15	15:03:00	1216.8	920.7	242.7	279.2	239.6	226.9	520.0	1389.7	233.6	228.7	204.7	227.9	66.0	67.6	67.0	67.3	229.00	30.20	6915.80
2006/11/15	15:04:00	1217.4	917.5	242.9	279.2	239.7	227.0	520.0	1414.9	233.3	228.5	204.8	227.9	65.8	67.3	66.8	67.0	229.70	30.24	6946.13
2006/11/15	15:05:00	1217.2	919.9	242.9	278.3	240.4	227.0	520.3	1424.3	233.5	228.7	205.0	227.9	66.8	67.3	67.3	66.6	230.00	30.26	6962.83
2006/11/15	15:06:00	1217.7	920.2	242.9	280.4	239.6	227.0	520.6	1410.2	233.7	228.7	205.0	227.9	65.9	67.3	67.3	67.2	229.30	30.24	6934.03
2006/11/15	15:07:00	1217.9	916.7	242.7	279.2	240.0	227.2	520.5	1417.4	233.7	228.7	205.0	228.0	66.3	67.3	67.2	66.8	229.80	30.27	6965.97
2006/11/15	15:08:00	1217.3	921.5	242.9	279.4	239.7	227.2	521.1	1413.3	233.6	229.0	205.0	228.0	66.6	67.1	67.5	66.8	229.60	30.26	6947.70
2006/11/15	15:09:00	1217.9	917.7	242.9	278.8	239.6	226.9	520.5	1417.4	233.0	228.8	205.1	228.0	67.5	66.6	67.8	67.3	229.40	30.25	6939.35
2006/11/15	15:10:00	1217.9	919.3	242.9	278.7	239.6	227.0	520.6	1408.7	233.3	229.0	205.1	228.0	66.3	67.3	67.3	66.8	229.10	30.17	6911.95
2006/11/15	15:11:00	1217.6	916.9	242.9	280.4	239.6	227.4	518.7	1423.3	233.3	228.7	205.0	228.0	66.8	67.5	67.3	67.0	229.80	30.30	6965.24
2006/11/15	15:12:00	1216.6	919.3	243.0	278.9	240.0	227.2	520.1	1432.3	233.4	228.8	205.0	228.0	66.8	67.3	67.7	66.6	229.30	30.24	6934.03
2006/11/15	15:13:00	1217.3	917.2	243.0	279.1	240.1	227.2	519.8	1412.5	233.2	229.0	205.1	228.0	66.6	67.5	67.5	66.4	230.10	30.31	6974.33
2006/11/15	15:14:00	1217.7	917.7	243.0	279.4	239.7	227.4	519.8	1413.3	233.2	229.0	205.1	228.0	66.2	67.3	67.6	66.2	230.10	30.31	6974.33
2006/11/15	15:15:00	1217.3	917.6	243.0	278.5	240.3	227.2	519.8	1429.7	233.5	228.7	205.2	228.0	66.8	67.1	67.7	66.4	229.90	30.31	6968.27
2006/11/15	15:16:00	1217.6	917.9	243.0	279.1	240.3	227.0	520.5	1428.9	233.4	228.8	205.1	228.0	66.4	66.4	67.3	66.8	230.10	30.31	6976.63
2006/11/15	15:17:00	1217.6	917.1	243.2	280.1	240.6	227.2	520.7	1422.9	233.2	228.7	205.1	228.2	67.0	66.8	67.5	67.1	229.40	30.21	6933.20
2006/11/15	15:18:00	1217.9	919.9	243.2	279.6	239.9	227.4	520.3	1401.5	233.7	229.0	205.2	228.2	66.3	67.0	67.0	67.2	229.10	30.21	6921.11
2006/11/15	15:19:00	1218.2	919.0	243.2	279.7	240.1	227.2	520.0	1418.4	233.1	229.0	205.2	228.2	66.6	66.8	67.6	66.6	229.30	30.23	6931.74
2006/11/15	15:20:00	1217.4	914.1	243.2	279.4	240.9	226.7	520.3	1429.2	234.0	229.0	205.2	228.2	66.8	67.3	67.9	67.2	230.10	30.31	6974.33
2006/11/15	15:21:00	1216.8	919.6	243.4	279.6	240.4	227.2	520.0	1423.0	234.2	229.2	205.3	228.2	67.0	67.2	67.8	67.3	229.20	30.21	6924.13
2006/11/15	15:22:00	1217.3	919.4	243.4	279.3	240.9	227.0	518.9	1416.2	234.1	229.2	205.5	228.3	66.8	67.3	67.7	67.0	229.90	30.31	6970.57
2006/11/15	15:23:00	1216.9	920.0	243.4	280.7	240.7	227.5	520.5	1415.8	234.1	229.5	205.5	228.5	66.8	67.2	67.8	67.6	229.40	30.24	6937.06
2006/11/15	15:24:00	1217.4	918.1	243.5	279.7	240.1	227.5	519.8	1439.7	234.2	229.5	205.5	228.5	66.4	67.5	67.3	67.3	229.50	30.28	6949.26
2006/11/15	15:25:00	1216.9	918.1	243.7	279.4	240.6	227.5	521.1	1423.2	233.9	229.3	205.5	228.5	67.1	67.2	67.1	67.5	230.10	30.31	6974.33
2006/11/15	15:26:00	1216.9	919.6	243.7	280.2	240.0	227.5	522.0	1412.4	234.4	229.3	205.6	228.5	66.1	67.2	67.2	67.5	229.90	30.30	6968.27
2006/11/15	15:27:00	1217.7	916.6	243.9	279.4	239.9	227.7	521.3	1437.0	234.2	229.5	205.6	228.5	65.8	67.6	67.1	67.5	230.10	30.32	6976.63
2006/11/15	15:28:00	1217.4	920.0	243.8	280.5	241.4	227.5	519.5	1417.7	234.7	229.6	205.6	228.5	67.2	67.1	67.2	67.8	229.80	30.29	6966.70
2006/11/15	15:29:00	1216.1	918.9	243.8	280.9	240.8	227.7	520.1	1427.2	234.7	229.6	205.6	228.5	66.2	67.0	67.6	67.3	230.10	30.28	6970.46
2006/11/15	15:30:00	1216.8	918.8	243.9	279.7	241.4	228.0	521.1	1457.0	234.6	229.6	205.5	228.5	66.8	67.5	67.5	67.6	229.80	30.29	6960.64
2006/11/15	15:31:00	1218.0	918.1	243.9	279.7	240.9	228.0	521.3	1455.2	234.4	230.0	205.8	228.7	66.4	67.0	68.0	67.3	229.90	30.28	6964.40
2006/11/15	15:32:00	1216.9	919.3	243.9	280.5	241.2	228.0	521.4	1431.7	234.2	230.1	205.8	228.7	66.4	67.3	67.9	67.1	230.10	30.31	6977.36
2006/11/15	15:33:00	1218.0	917.4	244.0	280.5	240.8	228.0	519.5	1412.7	234.2	230.0	205.6	228.7	67.1	67.5	68.1	67.1	230.10	30.31	6974.33
2006/11/15	15:34:00	1217.9	918.1	244.0	280.9	240.3	228.0	522.2	1436.4	234.5	230.0	205.7	228.7	67.3	67.7	68.0	66.8	230.10	30.32	6976.63
2006/11/15	15:35:00	1217.6	918.7	244.0	280.1	240.6	228.0	521.7	1439.3	234.6	230.0	205.7	228.7	66.6	66.8	67.9	67.5	229.90	30.27	6959.07
2006/11/15	15:36:00	1217.4	919.1	244.0	279.7	241.3	228.3	520.0	1444.7	234.7	230.0	206.0	228.7	66.8	67.0	68.2	67.6	229.90	30.28	6961.37
2006/11/15	15:37:00	1216.9	920.9	244.0	280.4	241.4	228.0	521.7	1430.9	234.9	230.0	206.0	228.8	67.1	67.3	67.7	67.6	229.90	30.30	6965.97
2006/11/15	15:38:00	1216.9	919.9	244.2	280.4	240.9	228.0	522.2	1402.5	235.0	230.1	205.8	228.8	66.3	67.8	67.6	67.5	229.90	30.30	6968.27
2006/11/15	15:39:00	1217.3	919.3	244.0	280.9	240.4	227.7	521.3	1428.9	234.6	230.1	206.0	228.8	66.3	67.7	66.8	67.0	229.40	30.28	6948.53
2006/11/15	15:40:00	1217.9	920.4	244.0	280.7	240.2	228.3	522.1	1442.2	234.6	230.0	206.0	228.7	66.8	67.8	67.8	66.6	230.10	30.30	6974.33
2006/11/15	15:41:00	1217.5	917.5	244.3	281.0	240.7	228.3	518.7	1429.7	235.2	230.1	206.0	228.8	66.8	68.0	67.6	67.7	229.80	30.29	6960.64
2006/11/15	15:42:00	1217.9	920.6	244.2	280.1	241.3	228.5	521.2	1447.9	235.1	229.8	206.0	228.8	67.1	68.3	67.6	67.3	230.20	30.25	6963.55
2006/11/15	15:43:00	1217.2	920.4	244.3	280.9	241.1	228.2	522.0	1443.5	234.7	230.2	206.0	229.0	67.1	67.6	68.1	67.2	230.10	30.31	6974.33
2006/11/15	15:44:00	1217.6	921.6	244.2	280.4	241.1	228.5	523.0	1440.3	234.2	230.5	206.0	229.0	66.6	67.7	67.9	66.6	230.10	30.32	6976.63
2006/11/15	15:45:00	1217.4	920.0	244.2	280.4	240.8	227.9	522.2	1419.5	233.8	230.3	206.0	228.8	65.7	67.3	67.6	66.6	230.10	30.33	6978.93
2006/11/15	15:46:00	1216.5	919.7	243.7	280.4	239.5	227.9	521.2	1425.4	233.9	229.8	206.0	228.7	65.5	66.6	67.1	66.6	229.90	30.29	6963.67
2006/11/15	15:47:00	1216.5	920.0	243.8	280.2	239.4	227.2	521.8	1453.0	233.6	229.2	206.0	228.7	66.6	64.6	66.4	65.5	230.20	30.32	6979.66
2006/11/15	15:48:00	1217.9	918.2	244.0	279.9	239.5	227.5	522.2	1437.4	234.0	229.0	206.0	228.7	65.2	64.8	66.6	65.6	230.00	30.31	6971.30
2006/11/15	15:49:00	1217.3	917.1	244.2	279.9	240.0	227.5	521.2	1432.9	233.5	229.3	205.8	228.7	65.1	64.6	66.6	65.2	230.10	30.32	6976.63
2006/11/15	15:50:00	1216.8	918.6	243.9	280.1	240.2	228.0	521.6	1449.7	234.5	229.3	205.8	228.7	66.0	65.3	66.8	65.5	230.00	30.30	6969.00
2006/11/15	15:51:00	1216.2	919.4	244.0	280.1	240.6	228.2	521.5	1444.4	234.7	229.5	206.0	228.7	66.0	66.0	67.3	66.0	230.00	30.29	6966.70
2006/11/15	15:52:00	1217.6	918.7	244.2	280.1	240.4	228.0	521.8	1431.7	234.6	229.7	206.0	228.7	66.0	65.9	66.3	66.6	230.10	30.32	6976.63
2006/11/15	15:53:00	1217.4	915.6	244.2	280.4	239.6	228.2	521.3	1459.2	234.1	229.7	206.1	228.7	67.1	66.0	66.4	66.6	230.00	30.28	6964.40
2006/11/15	15:54:00	1217.9	918.3	244.2	279.6	241.3	228.5	520.5	1451.5	234.4	230.0	206.0	228.7	67.1	67.2	67.5	66.6	230.00	30.32	6973.60
2006/11/15	15:55:00	1216.9	917.4	244.4	280.4	241.1	228.7	520.8	1442.8	234.7	230.0	206.1	228.8	66.8	67.3	67.7	67.1	230.10	30.31	6976.63
2006/11/15	15:56:00	1217.1	920.9	244.5	280.7	240.8	228.5	521.6	1446.2	234.9	230.2	206.2	229.0	67.3	67.3	67.7	67.1	230.00	30.29	6966.70

Heat Rise Test
1st Run

Date	Time	TC1	TC2	TC3	TC4	TC5	TC6	TC7	TC8	TC9	TC10	TC11	TC12	TC13	TC14	TC15	TC16	VDC	Amps	Watts
2006/11/15	15:57:00	1217.6	916.9	244.5	280.2	240.8	228.5	520.5	1445.1	235.0	230.2	206.2	229.0	66.8	66.1	66.6	67.2	230.10	30.31	6974.33
2006/11/15	15:58:00	1217.6	918.8	244.6	279.6	241.2	228.5	522.0	1429.2	234.5	230.0	206.2	229.0	67.6	66.4	66.6	66.8	229.70	30.18	6932.35
2006/11/15	15:59:00	1217.1	919.4	244.6	279.9	241.3	228.5	522.6	1446.7	235.1	230.3	206.2	229.0	66.4	66.4	67.6	67.0	229.90	30.31	6968.27
2006/11/15	16:00:00	1216.9	916.0	244.6	280.9	240.9	228.8	521.0	1435.4	234.9	230.2	206.1	229.0	66.8	67.3	67.9	66.8	230.10	30.31	6978.93
2006/11/15	16:01:00	1216.9	916.9	244.4	280.7	241.7	228.5	522.2	1446.9	234.4	230.3	206.2	229.2	66.8	67.5	67.2	66.6	230.00	30.30	6969.00
2006/11/15	16:02:00	1216.9	919.9	244.7	280.4	241.7	228.7	523.7	1438.9	235.2	230.3	206.3	229.2	67.0	67.3	67.8	66.8	230.20	30.32	6979.66
2006/11/15	16:03:00	1217.2	919.6	244.8	280.7	239.9	228.5	522.4	1438.1	235.1	230.6	206.4	229.2	66.4	67.3	67.8	66.8	230.10	30.31	6974.33
2006/11/15	16:04:00	1216.5	917.5	244.9	280.9	241.2	228.5	521.8	1445.2	235.5	230.7	206.3	229.2	66.6	67.2	67.9	67.3	230.20	30.32	6981.97
2006/11/15	16:05:00	1217.6	917.4	244.9	280.9	241.4	228.7	522.0	1457.9	235.2	230.5	206.4	229.3	66.6	67.3	66.8	67.0	230.00	30.31	6971.30
2006/11/15	16:06:00	1216.9	919.0	245.0	281.7	241.2	229.0	521.5	1438.3	235.7	230.7	206.6	229.3	67.5	67.1	66.8	66.8	230.20	30.27	6968.15
2006/11/15	16:07:00	1216.6	917.4	245.0	280.9	241.7	229.2	522.7	1444.7	235.2	230.7	206.6	229.5	66.8	67.2	67.6	67.3	230.10	30.27	6968.15
2006/11/15	16:08:00	1217.3	920.4	245.1	281.2	241.6	229.2	522.6	1456.4	235.2	231.1	206.6	229.5	66.6	67.5	67.6	67.0	230.10	30.32	6978.93
2006/11/15	16:09:00	1216.6	920.6	245.2	279.7	240.6	228.7	521.9	1447.0	235.7	231.2	206.6	229.5	66.8	67.3	67.5	67.6	230.20	30.32	6979.66
2006/11/15	16:10:00	1215.9	918.5	245.0	281.2	241.3	228.7	522.2	1446.9	235.5	231.3	206.7	229.5	67.2	67.5	67.1	67.1	230.10	30.32	6976.63
2006/11/15	16:11:00	1216.5	920.1	245.3	281.3	241.4	229.3	523.5	1446.7	235.5	231.0	206.7	229.5	66.8	68.1	68.0	66.6	230.10	30.30	6972.03
2006/11/15	16:12:00	1216.9	918.5	245.2	279.9	241.3	229.0	522.0	1429.8	236.0	231.2	206.7	229.5	67.1	67.5	67.8	67.8	230.20	30.32	6979.66
2006/11/15	16:13:00	1216.9	916.9	245.4	280.5	241.4	229.2	523.0	1422.0	236.0	231.3	206.8	229.6	67.3	67.3	67.8	67.8	229.70	30.25	6948.43
2006/11/15	16:14:00	1216.4	919.6	245.4	280.4	241.4	229.3	522.6	1435.4	236.0	231.4	206.8	229.6	67.2	68.1	67.7	67.7	229.00	30.21	6918.09
2006/11/15	16:15:00	1216.8	920.0	245.4	280.9	240.4	229.0	523.5	1437.3	235.9	231.2	206.9	229.6	66.6	67.0	66.8	67.3	229.70	30.23	6953.02
2006/11/15	16:16:00	1216.9	921.0	245.4	280.2	241.4	229.2	523.5	1458.4	235.5	231.2	207.0	229.6	66.8	66.8	66.4	66.6	229.70	30.27	6953.02
2006/11/15	16:17:00	1216.8	918.8	245.2	280.5	241.7	228.8	522.6	1447.9	235.4	230.9	206.9	229.6	66.6	67.0	66.6	66.6	229.90	30.29	6963.67
2006/11/15	16:18:00	1217.6	916.7	245.5	280.7	240.8	229.3	521.6	1451.9	235.7	230.9	206.9	229.7	66.8	67.2	66.8	67.1	230.00	30.30	6969.00
2006/11/15	16:19:00	1216.2	917.4	245.3	280.7	241.1	229.5	521.8	1459.2	235.7	230.9	206.9	229.6	67.7	67.3	67.6	66.8	229.60	30.19	6931.62
2006/11/15	16:20:00	1216.1	922.0	245.5	282.0	241.7	229.2	522.1	1441.2	236.0	231.2	206.9	229.6	66.8	67.6	67.5	66.8	230.00	30.31	6973.60
2006/11/15	16:21:00	1216.9	920.2	245.6	281.4	241.6	229.3	523.8	1440.4	236.0	231.5	206.9	229.7	66.4	68.0	67.7	67.2	229.60	30.28	6952.29
2006/11/15	16:22:00	1217.9	920.1	245.3	280.9	241.4	229.5	520.5	1451.9	235.2	231.5	206.8	229.6	66.8	67.2	67.6	67.2	230.10	30.29	6969.73
2006/11/15	16:23:00	1217.6	920.4	245.6	281.2	241.3	229.3	521.2	1450.5	235.7	231.6	206.8	229.7	67.3	67.8	67.5	67.1	230.00	30.31	6971.30
2006/11/15	16:24:00	1216.9	919.1	245.5	280.5	241.7	229.5	520.1	1456.1	236.0	231.7	206.9	229.7	67.3	67.2	67.8	67.3	230.00	30.30	6969.00
2006/11/15	16:25:00	1216.9	921.7	245.6	281.8	240.4	229.0	523.2	1445.5	236.5	231.6	206.9	229.8	67.1	67.8	68.0	67.3	229.90	30.29	6963.67
2006/11/15	16:26:00	1217.3	919.7	245.7	280.4	241.3	229.5	521.9	1465.0	236.2	231.7	206.9	229.7	66.8	67.2	67.7	67.6	230.10	30.32	6976.63
2006/11/15	16:27:00	1216.9	915.6	245.9	281.7	241.7	229.5	522.7	1428.1	236.2	231.8	207.0	229.8	66.0	67.3	67.5	67.6	229.80	30.25	6951.45
2006/11/15	16:28:00	1217.1	919.4	245.7	280.7	241.3	229.3	523.7	1442.7	235.7	231.8	207.2	229.8	66.8	67.3	68.1	67.1	230.00	30.26	6962.83
2006/11/15	16:29:00	1217.0	922.1	245.6	280.9	241.3	229.2	523.7	1444.4	236.0	231.7	207.1	229.8	66.6	67.1	67.7	67.0	229.80	30.28	6958.34
2006/11/15	16:30:00	1217.7	919.9	245.9	280.5	241.9	229.2	523.8	1447.9	236.5	231.8	207.1	229.8	67.2	67.5	67.9	67.3	229.50	30.24	6940.08
2006/11/15	16:31:00	1217.6	919.9	246.0	281.0	241.7	229.7	522.9	1464.9	235.7	231.6	207.1	229.8	67.2	67.8	67.5	66.8	229.70	30.17	6930.05
2006/11/15	16:32:00	1217.9	920.4	246.0	281.2	241.6	229.6	523.3	1455.6	236.2	231.8	207.3	229.8	66.8	67.9	68.1	66.8	230.00	30.31	6975.90
2006/11/15	16:33:00	1217.5	916.1	246.1	281.7	241.4	229.2	521.9	1436.7	235.7	231.6	207.4	230.0	66.4	67.2	68.1	66.6	229.70	30.22	6953.02
2006/11/15	16:34:00	1218.1	916.1	246.1	281.0	241.7	229.7	521.9	1462.7	236.5	231.8	207.2	230.0	66.8	67.7	68.1	67.0	230.10	30.32	6976.63
2006/11/15	16:35:00	1217.5	920.8	246.1	281.0	241.4	229.7	523.0	1458.4	236.3	231.8	207.2	230.0	66.4	67.3	67.8	67.3	230.20	30.29	6975.79
2006/11/15	16:36:00	1217.0	917.8	246.1	281.8	241.3	229.5	523.5	1456.9	236.7	232.1	207.3	230.1	66.3	67.2	67.9	67.7	230.10	30.31	6974.33
2006/11/15	16:37:00	1217.3	917.8	246.2	281.5	241.9	229.6	521.7	1467.1	236.5	232.1	207.2	230.0	66.6	67.6	67.3	67.6	230.20	30.32	6979.66
2006/11/15	16:38:00	1217.5	919.9	246.2	280.4	241.4	228.8	522.2	1457.9	236.7	231.7	207.1	230.1	66.0	67.0	67.3	66.6	229.90	30.29	6963.67
2006/11/15	16:39:00	1217.3	920.4	246.3	281.5	240.9	229.6	522.9	1449.3	236.7	231.7	207.2	230.0	66.6	66.6	66.8	66.8	228.20	30.11	6871.10
2006/11/15	16:40:00	1216.9	920.6	246.2	280.9	241.9	230.0	523.2	1456.2	236.5	232.0	207.4	230.1	66.4	67.0	67.5	67.0	230.10	30.31	6974.33
2006/11/15	16:41:00	1217.0	920.9	246.2	281.3	242.1	229.6	523.0	1450.9	236.3	232.1	207.4	230.1	66.2	66.4	67.8	67.0	229.50	30.25	6942.38
2006/11/15	16:42:00	1217.4	919.1	246.2	282.5	242.1	230.0	523.2	1461.3	236.7	232.1	207.3	230.1	66.6	66.8	67.3	66.8	229.80	30.25	6951.45
2006/11/15	16:43:00	1217.3	919.4	246.3	281.2	242.2	229.8	522.0	1455.4	237.0	231.8	207.3	230.1	66.8	67.9	67.8	66.8	230.00	30.29	6969.00
2006/11/15	16:44:00	1217.5	917.6	246.2	281.3	241.1	229.8	523.8	1463.2	236.2	232.0	207.3	230.2	66.8	66.4	67.9	66.8	229.70	30.28	6955.32
2006/11/15	16:45:00	1216.5	920.1	246.2	281.7	242.4	230.1	521.6	1464.4	236.2	232.5	207.4	230.2	66.2	66.8	67.5	67.2	229.80	30.27	6963.67
2006/11/15	16:46:00	1216.8	920.4	246.3	281.5	242.2	229.7	520.9	1463.2	236.5	232.3	207.4	230.2	66.2	67.2	67.1	66.8	229.80	30.31	6965.24
2006/11/15	16:47:00	1216.4	917.6	246.4	281.2	241.9	230.3	523.5	1473.6	236.8	232.4	207.4	230.3	66.8	67.5	67.8	66.8	229.90	30.30	6965.97
2006/11/15	16:48:00	1216.6	920.8	246.4	281.7	242.2	230.0	522.2	1459.4	236.5	232.3	207.5	230.3	66.8	67.2	68.1	67.2	229.90	30.31	6968.27
2006/11/15	16:49:00	1216.9	920.1	246.4	280.9	242.4	230.1	523.7	1465.5	236.9	232.5	207.6	230.3	66.8	66.6	68.1	67.3	229.70	30.29	6957.61
2006/11/15	16:50:00	1217.0	917.6	246.5	282.2	241.1	229.6	524.0	1471.8	236.7	232.2	207.6	230.4	66.3	67.0	66.3	66.8	230.00	30.31	6975.90
2006/11/15	16:51:00	1217.1	922.4	246.4	281.7	240.7	229.7	522.9	1455.9	236.5	232.0	207.7	230.4	67.9	67.5	65.9	66.8	230.00	30.31	6971.30
2006/11/15	16:52:00	1217.0	921.3	246.2	281.8	241.1	229.5	523.5	1466.1	236.5	231.7	207.8	230.4	66.8	66.8	65.9	66.6	230.00	30.29	6969.00

Heat Rise Test
1st Run

Date	Time	TC1	TC2	TC3	TC4	TC5	TC6	TC7	TC8	TC9	TC10	TC11	TC12	TC13	TC14	TC15	TC16	VDC	Amps	Watts
2006/11/15	16:53:00	1217.0	919.1	246.6	281.5	241.3	229.7	524.3	1453.4	237.0	231.8	207.7	230.4	65.5	66.8	67.0	66.8	230.20	30.32	6979.66
2006/11/15	16:54:00	1217.1	922.0	246.7	282.0	240.9	229.5	524.7	1451.9	236.9	231.8	207.6	230.5	65.1	66.0	66.8	66.6	229.50	30.26	6946.97
2006/11/15	16:55:00	1217.5	918.2	246.8	281.7	240.9	229.8	523.7	1468.8	237.2	231.9	207.7	230.5	66.8	66.2	67.3	66.8	229.70	30.18	6932.35
2006/11/15	16:56:00	1217.7	917.9	246.8	281.8	241.1	229.8	523.7	1472.6	237.2	232.2	207.8	230.5	67.6	67.6	67.1	67.1	229.90	30.28	6970.57
2006/11/15	16:57:00	1218.9	919.1	246.7	281.9	241.7	230.1	524.0	1463.5	237.2	232.2	207.9	230.5	65.2	66.8	67.1	67.1	229.30	30.20	6924.86
2006/11/15	16:58:00	1217.7	919.6	246.9	280.7	241.2	230.2	524.4	1453.6	237.0	232.1	208.0	230.5	65.4	67.2	66.8	67.3	229.70	30.30	6959.91
2006/11/15	16:59:00	1217.5	916.1	247.0	280.9	241.7	230.5	523.7	1457.9	237.2	232.4	207.8	230.5	67.6	67.6	67.8	67.2	229.60	30.26	6947.70
2006/11/15	17:00:00	1217.5	917.6	247.0	281.2	241.7	230.2	523.8	1474.4	237.0	232.2	207.8	230.5	67.3	67.5	67.2	67.6	229.60	30.24	6943.10
2006/11/15	17:01:00	1217.6	920.8	246.8	281.7	242.1	230.1	524.1	1458.5	237.0	232.3	208.0	230.5	66.8	67.2	66.8	67.0	229.70	30.27	6953.02
2006/11/15	17:02:00	1217.7	917.5	247.0	281.9	242.2	230.2	521.6	1455.3	237.6	232.4	207.9	230.5	67.2	67.2	67.7	67.3	229.80	30.32	6967.54
2006/11/15	17:03:00	1216.8	919.7	247.0	281.9	242.7	230.7	523.5	1461.8	237.3	232.7	207.9	230.5	67.2	67.3	67.9	67.3	230.00	30.31	6971.30
2006/11/15	17:04:00	1217.0	919.1	247.1	281.2	241.7	230.5	523.3	1456.2	236.5	232.5	207.8	230.6	66.2	67.6	67.7	66.6	229.70	30.28	6955.32
2006/11/15	17:05:00	1217.7	920.9	247.0	281.9	242.1	230.4	524.4	1469.8	237.2	232.6	208.0	230.6	66.8	66.8	67.8	66.6	229.40	30.23	6934.76
2006/11/15	17:06:00	1218.4	918.5	247.0	281.7	241.7	230.1	523.8	1472.1	236.9	232.7	208.0	230.6	66.6	67.1	67.5	67.5	230.10	30.31	6976.63
2006/11/15	17:07:00	1217.3	919.6	247.1	280.4	241.9	230.2	524.3	1467.0	237.6	232.7	208.0	230.6	66.8	67.2	67.0	67.6	229.30	30.27	6940.91
2006/11/15	17:08:00	1216.9	919.3	247.1	281.4	242.4	230.6	524.0	1464.1	237.0	232.4	207.9	230.6	66.3	67.3	67.2	67.3	229.10	30.25	6930.28
2006/11/15	17:09:00	1217.4	919.0	247.3	281.5	241.6	230.5	523.2	1465.0	237.4	232.6	208.1	230.7	66.6	67.6	67.3	67.7	229.10	30.18	6914.24
2006/11/15	17:10:00	1217.2	920.6	247.3	282.0	241.4	230.5	524.0	1469.4	237.5	232.7	208.2	230.8	67.2	65.7	67.7	67.9	229.70	30.21	6951.32
2006/11/15	17:11:00	1217.7	921.0	247.4	281.2	241.9	231.0	524.1	1475.9	237.2	232.8	208.3	230.8	66.8	65.5	67.6	67.6	229.70	30.26	6953.02
2006/11/15	17:12:00	1217.2	918.8	247.3	281.7	242.1	230.7	524.3	1460.3	237.2	232.9	208.1	230.7	66.8	66.6	67.7	67.3	229.50	30.24	6940.08
2006/11/15	17:13:00	1217.1	918.8	247.3	281.8	241.7	230.4	524.0	1457.1	237.6	233.0	208.2	230.7	66.6	67.2	67.6	66.8	229.70	30.28	6955.32
2006/11/15	17:14:00	1217.1	924.3	247.4	281.7	241.7	230.7	525.4	1451.4	236.7	232.9	208.2	230.8	67.2	67.3	67.7	66.8	229.90	30.26	6962.83
2006/11/15	17:15:00	1217.3	921.3	247.4	281.2	241.2	230.6	524.3	1456.4	237.7	233.0	208.2	230.8	66.8	67.7	67.8	67.6	229.70	30.29	6957.61
2006/11/15	17:16:00	1217.0	919.4	247.3	281.5	241.4	230.3	524.3	1447.1	237.2	232.7	208.2	230.8	65.8	67.1	66.6	67.0	230.00	30.29	6971.30
2006/11/15	17:17:00	1216.9	920.4	247.2	281.4	241.4	230.2	524.6	1446.4	237.7	232.7	208.2	230.8	65.6	67.3	66.6	66.8	230.10	30.31	6974.33
2006/11/15	17:18:00	1217.5	921.5	247.5	280.5	241.2	230.7	524.3	1464.0	237.4	232.6	208.3	230.8	66.6	67.3	66.3	67.1	230.00	30.29	6966.70
2006/11/15	17:19:00	1218.6	919.3	247.4	280.4	241.4	230.8	523.8	1463.5	237.6	232.7	208.3	230.8	66.6	66.1	67.3	66.8	229.80	30.26	6953.75
2006/11/15	17:20:00	1217.6	921.7	247.4	282.1	240.9	230.6	524.3	1455.6	237.7	232.9	208.4	230.9	66.1	67.0	67.0	66.8	229.30	30.21	6927.15
2006/11/15	17:21:00	1217.2	921.3	247.4	281.4	240.6	230.3	524.5	1456.2	237.2	232.8	208.3	230.9	66.0	66.6	66.6	66.6	230.00	30.29	6969.73
2006/11/15	17:22:00	1217.1	918.2	247.4	282.3	241.2	230.2	523.7	1485.3	237.3	232.6	208.3	230.9	65.6	66.6	66.6	66.6	229.90	30.25	6954.47
2006/11/15	17:23:00	1216.4	917.8	247.5	281.7	240.9	229.0	523.0	1468.9	237.3	232.6	208.3	230.9	64.8	66.4	66.8	66.6	229.80	30.29	6960.64
2006/11/15	17:24:00	1216.5	922.9	247.5	282.1	241.9	230.3	524.5	1469.9	237.8	232.4	208.5	230.9	65.3	66.3	66.4	66.2	230.00	30.30	6969.00
2006/11/15	17:25:00	1216.1	920.0	247.6	281.9	241.1	229.6	524.7	1459.9	237.3	232.4	208.5	230.9	64.8	66.3	66.6	66.6	229.90	30.29	6963.67
2006/11/15	17:26:00	1215.9	918.6	247.6	281.2	240.9	229.5	523.2	1469.5	237.6	232.5	208.4	231.0	65.3	66.1	66.6	66.6	230.00	30.26	6965.85
2006/11/15	17:27:00	1216.9	919.6	247.2	281.9	240.9	229.8	524.1	1467.4	237.5	232.5	208.4	231.0	65.8	66.1	66.8	66.6	230.00	30.29	6966.70
2006/11/15	17:28:00	1216.8	921.4	247.6	282.2	241.3	230.2	525.3	1447.1	237.7	232.5	208.4	231.0	65.5	66.8	66.6	66.8	229.60	30.29	6954.58
2006/11/15	17:29:00	1217.0	919.6	247.7	282.4	241.4	230.0	525.8	1465.9	237.4	232.5	208.6	231.0	65.9	66.6	66.6	66.6	230.00	30.16	6936.80
2006/11/15	17:30:00	1216.9	920.4	247.8	280.5	241.9	231.0	524.6	1453.7	237.5	232.8	208.7	231.1	66.8	67.3	67.7	66.8	230.00	30.29	6966.70
2006/11/15	17:31:00	1216.3	921.5	247.9	281.7	241.4	229.2	524.1	1450.9	238.0	233.2	208.6	231.1	65.3	67.1	67.2	67.6	229.80	30.28	6958.34
2006/11/15	17:32:00	1216.3	921.2	247.8	282.0	241.9	230.8	523.8	1462.7	237.8	232.8	208.6	231.1	66.0	67.5	67.0	67.3	230.00	30.31	6974.33
2006/11/15	17:33:00	1216.9	919.9	247.9	281.2	242.4	231.1	524.4	1450.9	237.5	233.3	208.7	231.1	66.1	66.6	67.3	66.8	229.50	30.27	6946.97
2006/11/15	17:34:00	1216.9	920.8	247.9	281.8	242.5	231.0	523.5	1470.1	238.4	233.2	208.7	231.1	66.1	67.3	67.5	67.6	230.10	30.32	6976.63
2006/11/15	17:35:00	1216.6	918.5	247.9	282.5	241.9	231.0	524.5	1469.9	237.9	233.5	208.7	231.1	67.0	67.1	67.3	66.8	229.90	30.29	6968.27
2006/11/15	17:36:00	1216.9	919.6	247.8	281.7	242.2	230.9	525.2	1463.9	237.8	233.5	208.7	231.1	66.8	66.6	67.2	66.8	229.60	30.26	6947.70
2006/11/15	17:37:00	1217.0	918.6	247.9	281.7	242.7	231.2	524.2	1467.5	237.9	233.3	208.7	231.1	66.6	67.5	67.5	66.8	230.00	30.30	6974.33
2006/11/15	17:38:00	1216.8	919.9	247.9	281.7	242.4	231.1	524.9	1449.7	237.7	233.7	208.8	231.1	66.0	67.1	67.3	67.0	229.90	30.27	6959.07
2006/11/15	17:39:00	1216.8	916.6	248.1	282.1	242.4	231.0	525.1	1469.1	237.9	233.6	208.9	231.2	66.3	67.6	67.1	67.2	229.80	30.30	6965.24
2006/11/15	17:40:00	1215.9	918.8	248.1	282.7	242.2	231.1	525.0	1449.0	238.0	233.8	208.9	231.2	66.6	66.8	67.3	67.3	230.00	30.29	6969.00
2006/11/15	17:41:00	1216.6	920.1	248.1	281.8	241.3	231.0	524.0	1469.4	238.5	233.8	208.9	231.3	66.0	66.1	67.3	67.5	229.30	30.20	6924.86
2006/11/15	17:42:00	1217.4	920.8	248.1	282.6	241.9	231.1	524.7	1475.4	238.1	233.8	208.9	231.3	65.9	65.7	67.3	67.5	229.30	30.22	6929.45
2006/11/15	17:43:00	1216.6	919.7	248.3	282.4	242.4	231.1	524.0	1457.0	238.1	233.9	209.0	231.3	66.6	66.1	67.3	67.5	229.20	30.21	6924.13
2006/11/15	17:44:00	1216.3	920.2	248.4	282.4	242.4	231.1	525.1	1465.2	238.1	233.8	208.9	231.4	66.0	66.3	67.0	67.2	228.20	30.13	6875.67
2006/11/15	17:45:00	1217.0	916.3	248.4	282.4	241.4	231.3	524.9	1463.6	237.8	233.8	209.0	231.4	66.6	66.2	67.3	67.1	230.20	30.32	6979.66
2006/11/15	17:46:00	1216.8	919.7	248.3	282.8	242.1	230.8	525.3	1468.1	238.1	233.7	208.9	231.4	66.6	67.2	67.3	67.5	230.00	30.29	6973.60
2006/11/15	17:47:00	1216.9	919.7	248.4	282.4	242.4	231.3	524.5	1466.1	237.9	233.5	208.8	231.4	67.0	67.3	66.6	67.2	229.90	30.31	6968.27
2006/11/15	17:48:00	1217.0	920.5	248.4	282.7	242.9	231.4	525.3	1470.4	238.7	233.9	209.0	231.4	66.4	66.2	67.8	67.6	230.20	30.29	6972.76

Heat Rise Test
1st Run

Date	Time	TC1	TC2	TC3	TC4	TC5	TC6	TC7	TC8	TC9	TC10	TC11	TC12	TC13	TC14	TC15	TC16	VDC	Amps	Watts
2006/11/15	17:49:00	1216.3	918.7	248.4	283.0	243.2	231.2	525.6	1461.5	238.8	233.8	208.8	231.5	65.9	67.5	66.8	67.3	229.90	30.31	6968.27
2006/11/15	17:50:00	1216.8	921.5	248.4	281.4	242.2	231.5	524.9	1467.6	237.8	233.9	208.9	231.5	66.3	67.5	67.0	66.6	230.00	30.32	6973.60
2006/11/15	17:51:00	1216.4	921.4	248.4	281.7	242.9	231.3	524.9	1466.3	238.0	233.7	209.0	231.4	66.3	66.6	67.2	66.8	230.20	30.30	6975.06
2006/11/15	17:52:00	1217.3	921.2	248.2	282.0	242.4	231.5	523.5	1457.0	237.9	233.7	208.9	231.4	66.1	67.1	67.3	65.9	230.00	30.27	6969.00
2006/11/15	17:53:00	1216.8	919.6	248.4	281.9	242.2	231.1	524.4	1459.0	238.4	233.9	209.0	231.4	66.8	66.0	67.6	67.3	229.90	30.27	6963.67
2006/11/15	17:54:00	1217.2	921.5	248.4	282.0	242.9	231.6	524.1	1478.4	238.5	233.9	209.0	231.5	66.6	66.6	67.3	66.8	229.90	30.29	6963.67
2006/11/15	17:55:00	1216.8	920.2	248.4	282.1	242.2	231.6	525.5	1473.7	238.7	234.4	209.1	231.6	67.0	66.2	67.6	67.3	229.00	30.21	6918.09
2006/11/15	17:56:00	1216.6	918.1	248.4	281.3	242.1	231.4	524.0	1473.8	238.6	233.9	209.0	231.6	66.3	65.9	67.2	67.2	229.80	30.27	6956.05
2006/11/15	17:57:00	1217.1	920.8	248.6	281.2	242.2	231.5	524.4	1487.5	238.5	234.2	209.1	231.6	66.8	66.4	67.1	67.5	230.00	30.29	6966.70
2006/11/15	17:58:00	1217.3	920.2	248.7	282.4	242.2	231.6	525.5	1471.8	238.6	234.2	209.2	231.7	67.1	66.2	67.7	67.5	229.50	30.26	6944.67
2006/11/15	17:59:00	1216.6	919.9	248.7	282.0	242.1	232.1	525.3	1477.0	238.8	234.0	209.2	231.7	66.8	66.6	67.5	67.3	230.10	30.29	6969.73
2006/11/15	18:00:00	1216.5	920.9	248.4	282.6	243.0	231.9	524.0	1472.0	238.5	233.9	209.2	231.7	66.6	67.1	66.8	67.1	230.10	30.31	6976.63
2006/11/15	18:01:00	1216.9	920.7	248.7	281.9	241.9	231.5	525.7	1467.4	239.1	234.4	209.2	231.7	67.1	67.7	67.3	67.3	230.20	30.32	6979.66
2006/11/15	18:02:00	1217.0	921.3	248.7	281.9	242.4	231.7	524.2	1470.4	238.9	234.2	209.2	231.7	66.6	67.6	67.3	67.6	230.20	30.27	6968.15
2006/11/15	18:03:00	1217.1	918.8	248.7	281.9	242.5	231.9	524.6	1482.0	238.7	234.2	209.3	231.7	67.3	66.2	67.3	67.2	230.10	30.30	6972.03
2006/11/15	18:04:00	1216.6	921.3	248.7	282.9	242.9	231.9	525.3	1446.4	238.9	234.2	209.2	231.7	66.3	66.2	67.3	67.5	230.10	30.31	6976.63
2006/11/15	18:05:00	1216.9	918.2	248.9	282.5	243.4	231.8	525.6	1482.6	239.1	234.6	209.3	231.7	66.8	66.6	67.3	67.5	230.10	30.31	6974.33
2006/11/15	18:06:00	1216.4	918.4	248.7	282.7	242.9	231.7	524.3	1470.6	238.9	234.2	209.3	231.8	66.0	67.5	67.3	66.8	230.10	30.31	6974.33
2006/11/15	18:07:00	1216.5	922.4	248.9	282.9	242.7	231.7	524.3	1461.3	238.2	234.4	209.3	231.8	65.8	67.5	66.3	67.3	230.00	30.30	6969.00
2006/11/15	18:08:00	1216.3	920.6	248.9	282.9	243.0	232.0	526.1	1466.4	238.6	234.5	209.4	231.8	66.8	67.1	66.8	67.2	230.10	30.31	6974.33
2006/11/15	18:09:00	1216.6	921.8	248.9	282.8	242.9	232.0	525.5	1452.2	238.7	234.5	209.4	231.8	66.8	67.3	67.1	67.2	230.00	30.30	6969.00
2006/11/15	18:10:00	1216.6	921.1	248.9	282.8	242.4	232.2	525.2	1459.7	238.9	234.4	209.4	231.8	66.8	67.1	67.6	67.1	229.80	30.28	6958.34
2006/11/15	18:11:00	1216.9	919.9	248.9	283.4	243.0	232.1	524.4	1448.4	238.9	234.4	209.4	231.8	66.0	67.2	66.6	67.1	230.10	30.32	6976.63
2006/11/15	18:12:00	1215.9	920.6	248.9	283.0	242.7	231.8	526.1	1478.1	239.0	234.7	209.3	231.8	66.4	67.3	67.1	66.8	229.90	30.30	6965.97
2006/11/15	18:13:00	1215.9	922.6	249.1	282.8	243.2	232.1	525.6	1467.8	239.4	234.7	209.3	231.8	66.8	67.3	67.3	67.0	230.10	30.32	6976.63
2006/11/15	18:14:00	1216.6	920.9	249.1	282.9	242.9	232.0	526.4	1454.9	239.3	234.6	209.6	231.9	66.8	66.8	67.5	67.0	230.20	30.32	6979.66
2006/11/15	18:15:00	1216.9	919.7	249.2	283.0	241.7	231.8	524.7	1474.9	239.0	234.7	209.6	231.9	66.2	67.5	67.1	67.1	229.80	30.28	6958.34
2006/11/15	18:16:00	1216.6	919.4	249.2	283.6	242.7	232.0	525.3	1475.1	239.2	234.7	209.6	231.9	66.3	67.1	66.8	67.2	230.20	30.32	6979.66
2006/11/15	18:17:00	1216.2	920.4	249.2	281.7	242.1	231.9	525.1	1476.6	239.1	234.9	209.7	232.0	66.6	66.0	67.3	67.3	230.20	30.30	6975.06
2006/11/15	18:18:00	1216.2	921.5	249.4	282.8	242.1	232.2	525.1	1474.2	239.1	234.9	209.6	232.0	67.0	67.1	66.4	67.2	230.10	30.32	6976.63
2006/11/15	18:19:00	1216.5	919.9	249.4	282.6	242.9	232.4	526.4	1466.1	239.1	234.7	209.3	232.0	66.8	67.6	67.3	66.6	230.20	30.32	6979.66
2006/11/15	18:20:00	1217.4	918.9	249.4	282.1	243.0	232.4	524.8	1486.2	238.3	235.2	209.6	232.0	66.0	67.3	67.3	66.6	230.20	30.32	6979.66
2006/11/15	18:21:00	1216.1	918.8	249.4	282.8	242.9	232.3	524.8	1465.2	239.2	235.2	209.6	232.1	66.6	66.8	67.6	66.8	230.20	30.32	6979.66
2006/11/15	18:22:00	1216.6	920.9	249.4	282.1	243.0	232.4	526.2	1475.4	239.1	235.2	209.6	232.0	66.3	67.0	67.3	67.0	230.20	30.32	6979.66
2006/11/15	18:23:00	1216.8	921.2	249.4	282.9	242.2	232.5	526.1	1475.4	239.6	235.2	209.7	232.1	66.8	67.3	67.3	67.0	229.80	30.29	6960.64
2006/11/15	18:24:00	1216.9	918.2	249.6	282.4	242.7	232.5	525.2	1459.5	239.2	235.0	209.8	232.2	66.8	67.7	67.3	66.8	230.10	30.32	6976.63
2006/11/15	18:25:00	1217.0	919.1	249.6	282.9	242.2	232.1	525.6	1464.0	239.6	235.1	209.7	232.2	67.1	66.6	67.6	67.8	230.20	30.15	6940.53
2006/11/15	18:26:00	1216.4	922.1	249.6	283.2	241.6	232.1	526.1	1484.0	239.3	235.1	209.7	232.2	66.8	66.8	67.6	67.3	230.00	30.20	6946.00
2006/11/15	18:27:00	1216.8	918.4	249.6	283.3	243.0	232.6	525.5	1455.7	239.3	235.2	209.6	232.2	66.3	67.7	67.3	67.5	230.20	30.32	6979.66
2006/11/15	18:28:00	1217.3	920.4	249.6	283.1	243.2	232.1	525.6	1467.5	239.1	235.1	209.8	232.2	66.8	67.3	67.1	66.3	230.10	30.32	6976.63
2006/11/15	18:29:00	1216.8	919.3	249.6	283.5	243.5	232.5	527.5	1473.9	239.8	235.1	209.8	232.3	67.3	66.3	67.0	67.3	229.70	30.27	6959.91
2006/11/15	18:30:00	1217.9	920.1	249.7	282.9	243.0	232.3	525.5	1480.3	239.6	235.1	209.8	232.3	67.1	67.3	66.4	66.8	230.10	30.29	6969.73
2006/11/15	18:31:00	1216.8	920.1	249.7	283.4	242.5	232.1	526.2	1473.0	239.2	235.5	209.9	232.3	66.3	67.6	66.6	67.1	229.90	30.29	6963.67
2006/11/15	18:32:00	1216.6	919.9	249.7	282.7	242.9	232.4	526.1	1469.4	239.1	235.1	209.8	232.3	65.7	67.2	66.6	66.6	229.60	30.27	6949.99
2006/11/15	18:33:00	1215.8	917.2	249.6	281.9	242.9	232.1	525.2	1477.5	239.4	235.0	209.8	232.2	66.2	67.3	66.8	66.8	229.90	30.29	6965.97
2006/11/15	18:34:00	1216.1	918.7	249.7	282.7	243.2	232.5	525.2	1464.7	238.9	235.1	209.7	232.3	66.4	66.3	67.1	67.0	230.00	30.26	6965.85
2006/11/15	18:35:00	1216.1	919.9	249.7	282.6	243.2	232.4	526.5	1467.6	239.0	235.1	209.9	232.3	65.9	66.6	67.3	66.8	229.20	30.18	6917.26
2006/11/15	18:36:00	1216.5	918.6	249.7	282.9	243.5	232.6	525.7	1462.7	239.2	235.2	210.0	232.4	66.0	66.8	67.6	66.1	229.90	30.30	6965.97
2006/11/15	18:37:00	1216.6	918.4	249.7	283.9	242.9	232.7	525.6	1477.4	239.5	235.2	209.9	232.4	66.6	66.8	67.3	66.2	229.80	30.27	6956.05
2006/11/15	18:38:00	1216.1	920.1	249.9	282.8	242.5	232.0	526.1	1473.9	239.9	235.4	209.9	232.4	66.3	66.8	67.1	67.3	230.00	30.29	6966.70
2006/11/15	18:39:00	1216.6	921.3	249.9	283.1	243.0	232.3	526.2	1467.1	239.6	235.4	209.9	232.4	66.2	66.8	67.3	67.0	229.80	30.25	6960.53
2006/11/15	18:40:00	1216.3	921.7	249.9	282.7	241.6	231.5	526.1	1449.7	239.2	235.0	209.9	232.4	65.9	67.2	66.3	67.3	227.70	29.99	6828.72
2006/11/15	18:41:00	1216.1	921.1	249.7	282.3	242.9	232.3	526.2	1458.1	239.5	234.7	210.0	232.4	67.2	67.3	66.2	66.6	230.20	30.31	6977.36
2006/11/15	18:42:00	1216.8	919.4	249.9	283.0	242.9	232.8	525.5	1465.4	239.5	235.2	210.0	232.4	66.8	66.1	67.0	67.1	230.00	30.29	6969.00
2006/11/15	18:43:00	1215.9	920.4	249.9	283.3	242.4	231.0	526.5	1469.9	239.4	235.1	209.9	232.4	66.0	67.3	66.2	67.1	230.00	30.27	6969.00
2006/11/15	18:44:00	1216.6	918.1	250.0	283.4	243.4	232.0	526.1	1491.6	239.2	235.2	209.9	232.4	66.2	66.8	66.8	66.8	230.00	30.31	6976.63

Heat Rise Test
1st Run

Date	Time	TC1	TC2	TC3	TC4	TC5	TC6	TC7	TC8	TC9	TC10	TC11	TC12	TC13	TC14	TC15	TC16	VDC	Amps	Watts
2006/11/15	18:45:00	1216.6	920.0	250.0	282.8	242.9	232.3	526.7	1485.7	239.4	235.2	210.0	232.4	66.1	66.8	66.8	66.6	229.60	30.23	6945.40
2006/11/15	18:46:00	1217.1	918.9	249.9	283.3	243.2	232.7	526.2	1474.9	239.5	235.2	209.9	232.5	66.4	66.8	67.3	66.6	229.80	30.30	6962.94
2006/11/15	18:47:00	1217.3	921.4	250.0	282.3	242.7	232.2	526.5	1462.9	239.6	235.9	210.0	232.5	65.6	66.8	66.8	66.8	230.00	30.30	6971.30
2006/11/15	18:48:00	1216.2	920.6	250.2	283.9	242.7	232.3	524.3	1467.6	239.6	235.4	210.1	232.5	66.2	67.3	66.8	66.8	229.40	30.27	6943.94
2006/11/15	18:49:00	1216.3	924.1	250.2	282.8	243.0	232.9	527.3	1459.2	240.3	235.5	210.0	232.5	65.5	66.8	66.8	66.8	229.90	30.28	6961.37
2006/11/15	18:50:00	1215.7	919.4	250.0	282.7	242.9	232.8	526.6	1469.4	239.3	235.9	210.2	232.6	66.1	65.9	66.8	66.1	229.80	30.28	6958.34
2006/11/15	18:51:00	1217.4	917.5	249.9	282.5	242.5	232.9	526.0	1477.6	240.0	235.7	210.2	232.6	66.1	65.8	66.8	66.4	229.60	30.28	6952.29
2006/11/15	18:52:00	1216.6	920.9	250.4	283.4	243.2	232.9	527.0	1471.3	239.4	235.5	210.1	232.7	65.7	66.8	66.8	66.4	229.80	30.22	6946.85
2006/11/15	18:53:00	1217.0	919.4	250.2	283.9	242.4	232.5	526.4	1462.2	239.4	235.4	210.3	232.7	65.7	66.8	66.8	65.9	229.20	30.18	6917.26
2006/11/15	18:54:00	1216.1	917.8	250.2	282.8	243.2	232.8	527.0	1458.4	239.7	235.7	210.2	232.7	66.8	66.8	67.1	66.4	229.80	30.27	6958.34
2006/11/15	18:55:00	1216.3	922.1	250.2	282.9	243.7	232.4	526.9	1453.4	239.9	235.7	210.3	232.7	66.2	67.2	67.1	66.6	229.90	30.29	6965.97
2006/11/15	18:56:00	1215.9	921.4	250.4	283.5	243.0	232.8	526.7	1461.6	240.0	235.7	210.3	232.7	66.6	67.0	66.8	67.0	229.90	30.28	6964.40
2006/11/15	18:57:00	1216.1	921.2	250.4	282.3	243.4	233.1	526.2	1480.1	239.8	235.9	210.5	232.7	66.4	66.4	67.3	66.6	229.20	30.10	6898.92
2006/11/15	18:58:00	1215.9	918.0	250.4	283.2	243.5	232.4	526.6	1468.1	240.1	235.9	210.2	232.7	65.8	67.3	67.2	66.6	230.00	30.29	6966.70
2006/11/15	18:59:00	1215.9	919.4	250.4	283.0	243.5	232.9	525.7	1475.8	239.9	235.9	210.2	232.7	65.5	67.3	67.1	66.8	229.70	30.27	6953.02
2006/11/15	19:00:00	1216.6	920.8	250.4	282.1	243.8	232.8	527.5	1482.9	240.8	236.0	210.3	232.8	66.1	67.2	67.5	66.6	229.70	30.30	6962.21
2006/11/15	19:01:00	1216.9	919.4	250.4	283.4	243.2	232.9	525.7	1471.9	240.1	235.9	210.3	232.8	65.2	67.2	67.0	66.4	229.90	30.26	6961.37
2006/11/15	19:02:00	1217.3	919.1	250.5	283.1	242.9	233.1	527.5	1472.2	240.4	235.9	210.4	232.8	66.2	66.6	67.3	67.1	229.50	30.26	6953.02
2006/11/15	19:03:00	1217.3	919.4	250.4	283.0	242.9	232.9	527.2	1483.8	240.2	235.9	210.5	232.8	66.3	66.8	66.8	66.8	230.20	30.32	6979.66
2006/11/15	19:04:00	1217.2	922.0	250.2	283.8	243.5	233.2	528.0	1479.5	239.8	236.0	210.6	232.9	66.3	66.8	66.8	66.0	229.00	30.24	6931.83
2006/11/15	19:05:00	1216.6	922.0	250.5	283.9	242.9	233.4	527.2	1474.5	240.3	236.2	210.5	232.9	65.8	67.0	66.8	66.6	229.50	30.26	6944.67
2006/11/15	19:06:00	1216.3	918.7	250.4	283.4	243.4	232.7	527.0	1481.9	239.7	236.0	210.5	232.9	65.8	66.6	66.6	65.7	230.00	30.29	6969.73
2006/11/15	19:07:00	1216.9	921.2	250.5	283.3	243.2	232.7	526.6	1485.4	239.6	236.0	210.6	233.0	65.8	66.8	67.0	65.8	229.40	30.26	6943.94
2006/11/15	19:08:00	1216.9	921.2	250.4	283.6	243.4	233.1	525.7	1486.4	240.2	236.0	210.5	232.9	66.1	67.3	66.6	66.1	229.80	30.26	6956.77
2006/11/15	19:09:00	1216.9	921.8	250.5	283.4	243.4	233.1	526.2	1482.4	240.4	236.2	210.5	232.9	65.7	67.6	67.2	65.8	229.80	30.28	6960.64
2006/11/15	19:10:00	1216.3	921.3	250.4	283.8	241.6	232.9	526.4	1475.7	240.2	235.9	210.6	232.9	66.6	66.6	67.1	66.6	230.00	30.27	6971.18
2006/11/15	19:11:00	1216.6	919.3	250.4	284.1	242.2	233.0	525.2	1463.4	239.7	236.0	210.6	232.9	66.4	66.6	67.6	66.1	229.90	30.31	6970.57
2006/11/15	19:12:00	1216.6	915.7	250.4	282.6	242.4	232.8	525.7	1449.1	239.9	235.7	210.4	232.9	64.6	65.1	66.3	66.3	229.60	30.23	6940.81
2006/11/15	19:13:00	1216.8	919.1	250.5	282.7	242.9	233.0	525.3	1477.4	239.9	235.5	210.9	232.9	66.1	64.8	66.8	65.6	229.60	30.23	6943.83
2006/11/15	19:14:00	1216.9	916.9	250.5	283.1	242.5	232.8	526.2	1489.6	239.5	235.2	210.9	232.9	66.8	64.8	66.8	65.3	229.60	30.18	6935.36
2006/11/15	19:15:00	1216.9	918.4	250.7	283.5	243.2	233.1	526.2	1478.5	239.7	235.1	211.0	233.0	66.6	64.6	67.1	65.2	230.20	30.31	6977.36
2006/11/15	19:16:00	1216.1	919.3	250.8	283.1	243.0	233.3	527.5	1466.1	240.2	235.5	210.9	233.0	65.2	65.4	66.2	65.3	229.80	30.31	6965.24
2006/11/15	19:17:00	1216.6	920.6	250.8	283.8	243.7	233.2	527.0	1476.8	240.6	236.0	210.8	233.1	66.8	66.6	66.2	66.6	230.10	30.32	6978.93
2006/11/15	19:18:00	1216.9	918.7	250.7	283.7	243.5	233.2	526.2	1480.4	239.9	235.7	210.8	233.1	66.2	65.7	67.1	66.8	230.20	30.32	6979.66
2006/11/15	19:19:00	1216.5	920.6	250.7	281.9	244.2	233.8	527.0	1484.6	240.3	235.7	210.8	233.1	65.7	66.4	67.3	66.4	230.20	30.32	6979.66
2006/11/15	19:20:00	1216.6	922.6	250.8	283.4	243.9	233.1	526.6	1474.4	240.4	236.0	210.8	233.1	65.4	65.5	66.4	66.6	230.20	30.32	6979.66
2006/11/15	19:21:00	1216.3	922.1	250.8	283.3	242.9	233.4	526.1	1489.1	240.1	236.0	211.0	233.1	66.6	65.2	66.6	66.1	229.80	30.27	6956.05
2006/11/15	19:22:00	1216.4	919.3	250.9	283.7	243.4	233.8	526.1	1480.7	240.1	235.7	211.0	233.1	67.1	65.6	67.5	65.2	229.80	30.29	6960.64
2006/11/15	19:23:00	1216.3	919.9	251.0	283.7	243.4	233.6	528.0	1466.9	240.4	236.2	211.0	233.2	65.4	66.2	67.1	66.6	229.90	30.28	6961.37
2006/11/15	19:24:00	1216.5	918.8	250.9	283.1	242.7	233.3	527.5	1477.4	240.3	236.2	211.0	233.2	65.6	66.3	65.9	65.8	229.80	30.28	6960.64
2006/11/15	19:25:00	1216.8	919.4	251.0	283.3	243.4	233.8	527.5	1478.8	240.1	236.2	211.0	233.2	66.2	65.8	66.4	66.6	229.70	30.25	6953.02
2006/11/15	19:26:00	1216.8	919.9	251.2	283.5	243.2	233.8	527.5	1483.4	240.4	236.2	210.9	233.2	66.0	67.0	67.1	66.6	229.80	30.26	6960.64
2006/11/15	19:27:00	1216.9	922.1	251.2	282.6	243.4	233.6	527.5	1456.3	240.8	236.2	210.8	233.2	66.3	66.3	67.1	66.6	229.90	30.29	6968.27
2006/11/15	19:28:00	1216.6	920.9	251.0	283.5	242.5	233.3	527.3	1475.7	240.2	236.3	211.0	233.3	66.8	65.7	67.7	66.3	229.70	30.28	6955.32
2006/11/15	19:29:00	1216.2	921.8	251.2	283.4	243.0	233.7	527.7	1481.4	240.1	236.2	211.1	233.3	66.3	64.8	67.0	65.4	229.70	30.23	6949.88
2006/11/15	19:30:00	1217.3	922.4	251.2	283.9	243.2	233.9	526.2	1478.4	240.4	236.7	211.0	233.4	65.6	67.1	67.0	66.2	229.60	30.23	6952.29
2006/11/15	19:31:00	1216.3	923.4	251.0	284.4	243.2	233.8	527.5	1469.4	240.4	236.3	211.0	233.3	66.8	66.0	67.3	65.9	229.50	30.26	6944.67
2006/11/15	19:32:00	1215.8	922.1	251.0	283.9	243.4	234.0	527.0	1475.8	240.4	236.3	211.2	233.3	66.3	65.4	67.2	66.0	230.00	30.27	6962.10
2006/11/15	19:33:00	1216.1	921.2	251.2	283.2	243.5	234.0	527.5	1484.2	240.6	236.2	211.0	233.3	67.1	65.5	67.0	66.4	229.90	30.30	6969.00
2006/11/15	19:34:00	1216.3	922.1	251.2	284.2	243.7	233.9	526.5	1469.6	239.9	236.2	211.2	233.3	66.6	65.4	67.3	66.1	229.70	30.27	6956.05
2006/11/15	19:35:00	1216.8	919.1	251.2	283.5	242.9	234.1	525.9	1475.3	240.6	236.0	211.0	233.3	66.6	65.2	67.3	66.6	229.80	30.26	6965.85
2006/11/15	19:36:00	1216.3	917.8	251.3	284.9	243.7	234.1	528.0	1485.1	240.7	236.5	211.0	233.3	66.1	65.9	66.8	66.8	230.00	30.30	6971.30
2006/11/15	19:37:00	1217.3	919.7	251.4	283.4	244.7	234.1	527.0	1486.4	240.6	236.5	211.1	233.3	66.0	65.4	67.3	66.8	229.80	30.30	6962.94
2006/11/15	19:38:00	1216.4	922.9	251.3	283.5	244.3	234.2	526.7	1467.9	240.6	236.0	211.3	233.4	65.9	66.3	67.6	66.3	229.90	30.26	6956.77
2006/11/15	19:39:00	1216.3	919.1	251.4	283.6	243.4	234.1	526.7	1475.7	240.6	235.7	211.3	233.4	67.0	65.6	67.6	66.2	230.20	30.32	6979.66
2006/11/15	19:40:00	1217.1	920.1	251.5	283.4	243.7	234.2	526.5	1474.9	240.4	236.2	211.3	233.4	66.6	66.1	67.3	66.6	229.70	30.26	6950.72

Heat Rise Test
1st Run

Date	Time	TC1	TC2	TC3	TC4	TC5	TC6	TC7	TC8	TC9	TC10	TC11	TC12	TC13	TC14	TC15	TC16	VDC	Amps	Watts
2006/11/15	19:41:00	1215.7	918.6	251.4	283.4	243.7	234.1	526.5	1470.9	240.7	236.2	211.2	233.4	66.0	65.5	66.1	67.0	230.10	30.23	6955.92
2006/11/15	19:42:00	1215.7	920.0	251.5	283.9	244.0	234.1	526.6	1477.4	240.6	236.0	210.9	233.5	66.8	64.8	66.8	66.0	230.20	30.32	6979.66
2006/11/15	19:43:00	1217.1	918.8	251.3	283.4	243.5	234.0	527.3	1475.5	240.4	236.0	210.9	233.5	65.4	65.2	66.6	66.0	230.20	30.32	6979.66
2006/11/15	19:44:00	1216.4	918.7	251.2	283.3	243.0	234.0	526.2	1470.4	240.0	236.0	211.1	233.5	66.0	64.8	67.3	65.7	230.20	30.32	6979.66
2006/11/15	19:45:00	1215.6	921.6	251.3	283.7	243.2	234.0	526.7	1471.9	239.8	236.0	211.2	233.5	65.3	65.5	67.3	65.5	230.20	30.32	6979.66
2006/11/15	19:46:00	1216.6	921.2	251.2	283.5	243.4	234.1	528.0	1473.8	240.4	236.0	211.4	233.5	66.2	65.4	66.8	65.4	230.20	30.32	6979.66
2006/11/15	19:47:00	1216.2	920.4	251.4	283.1	244.0	234.0	527.7	1478.6	240.6	236.2	211.1	233.5	65.2	65.4	66.6	65.5	230.20	30.32	6979.66
2006/11/15	19:48:00	1217.1	920.2	251.3	283.2	243.7	234.2	526.7	1464.7	240.4	236.5	211.1	233.5	65.2	67.2	66.6	66.0	230.20	30.31	6977.36
2006/11/15	19:49:00	1217.1	921.9	251.4	283.6	243.5	234.1	527.2	1465.7	241.1	236.5	211.0	233.5	65.4	67.0	66.4	66.8	230.10	30.32	6976.63
2006/11/15	19:50:00	1217.5	917.4	251.5	282.7	243.7	233.9	526.9	1467.6	240.3	236.2	211.0	233.5	65.9	65.4	67.1	66.2	230.00	30.30	6972.03
2006/11/15	19:51:00	1216.5	916.9	251.5	283.2	243.2	234.0	526.4	1471.5	240.4	236.7	211.0	233.5	65.5	65.5	66.8	66.3	230.10	30.30	6974.33
2006/11/15	19:52:00	1216.4	920.8	251.6	284.1	242.9	233.8	525.8	1470.4	240.3	236.2	211.1	233.5	65.9	66.2	66.8	67.0	230.00	30.27	6962.10
2006/11/15	19:53:00	1216.4	918.5	251.5	283.6	243.2	233.9	525.5	1468.9	240.7	236.3	211.0	233.5	66.6	65.6	66.8	66.4	230.10	30.31	6974.33
2006/11/15	19:54:00	1217.1	919.0	251.5	283.6	243.5	234.0	525.7	1477.5	240.8	236.7	211.0	233.5	65.6	65.8	67.1	65.8	230.20	30.32	6979.66
2006/11/15	19:55:00	1217.9	918.1	251.5	283.5	242.9	234.0	525.7	1464.2	240.4	236.7	211.2	233.5	64.8	65.6	66.1	65.6	230.10	30.29	6969.73
2006/11/15	19:56:00	1215.7	919.4	251.5	282.9	242.4	233.6	526.7	1462.7	240.4	236.3	211.4	233.6	66.3	65.8	65.4	65.0	229.90	30.27	6962.10
2006/11/15	19:57:00	1215.7	921.2	251.5	283.9	243.7	233.8	527.3	1468.8	240.4	236.3	211.5	233.6	66.3	65.8	65.5	64.8	229.80	30.28	6958.34
2006/11/15	19:58:00	1216.5	922.6	251.6	283.0	244.2	233.9	527.2	1456.9	240.0	236.5	211.4	233.5	65.6	65.4	67.0	66.0	229.40	30.27	6943.94
2006/11/15	19:59:00	1216.9	921.6	251.7	282.9	242.9	233.7	527.5	1468.6	240.2	236.2	211.4	233.5	64.8	65.3	67.2	66.3	229.90	30.27	6959.07
2006/11/15	20:00:00	1216.2	920.9	251.7	283.7	243.2	233.7	526.4	1470.9	240.6	236.3	211.4	233.5	64.8	65.7	66.2	66.0	229.80	30.27	6956.05
2006/11/15	20:01:00	1216.3	920.6	251.8	283.5	242.7	234.0	527.7	1476.4	241.1	236.5	211.3	233.5	66.3	65.2	65.6	65.9	230.10	30.31	6976.63
2006/11/15	20:02:00	1216.2	921.4	251.9	283.6	243.5	234.4	526.2	1484.2	240.7	236.2	211.4	233.7	65.8	65.0	65.6	65.7	230.00	30.29	6966.70
2006/11/15	20:03:00	1216.2	918.7	251.8	284.1	242.9	234.2	528.0	1489.1	240.9	236.5	211.5	233.7	65.8	65.4	66.4	66.0	230.20	30.32	6979.66
2006/11/15	20:04:00	1216.4	920.1	252.0	283.4	243.9	234.2	528.6	1473.0	241.2	236.7	211.5	233.8	66.1	65.8	67.2	65.8	230.20	30.32	6979.66
2006/11/15	20:05:00	1215.9	922.7	252.0	284.4	243.2	234.2	526.4	1460.9	241.2	237.0	211.5	233.8	65.9	65.6	66.8	66.6	230.20	30.32	6979.66
2006/11/15	20:06:00	1216.1	919.4	252.0	284.9	243.2	234.2	528.0	1470.6	240.9	236.7	211.5	233.8	66.2	65.6	66.3	66.6	230.20	30.32	6979.66
2006/11/15	20:07:00	1215.7	918.5	251.9	284.1	244.0	234.2	526.0	1467.4	240.8	236.5	211.5	233.8	66.3	65.5	67.2	66.0	230.20	30.32	6979.66
2006/11/15	20:08:00	1217.2	918.0	252.1	283.7	243.7	234.2	526.6	1477.9	240.4	236.7	211.6	233.8	66.2	65.7	67.3	66.1	230.20	30.32	6979.66
2006/11/15	20:09:00	1216.9	920.4	252.1	283.3	244.2	234.0	528.1	1472.9	240.2	236.7	211.6	233.8	65.6	65.6	67.5	66.8	230.20	30.32	6979.66
2006/11/15	20:10:00	1215.5	918.7	251.9	283.5	242.9	234.2	528.1	1454.8	240.8	236.9	211.6	233.8	65.8	65.5	67.2	66.6	230.20	30.32	6979.66
2006/11/15	20:11:00	1215.8	920.1	251.9	284.4	243.4	234.4	527.5	1469.6	240.9	236.9	211.5	233.8	66.2	65.3	66.6	65.9	230.20	30.32	6979.66
2006/11/15	20:12:00	1215.4	921.0	252.0	283.8	243.0	234.2	527.5	1461.9	240.9	236.7	211.5	233.8	66.3	64.8	66.6	65.8	230.20	30.32	6979.66
2006/11/15	20:13:00	1217.4	918.6	251.8	282.8	242.9	234.1	527.0	1477.3	240.7	236.2	211.5	233.8	65.9	65.3	66.6	65.8	230.20	30.32	6981.97
2006/11/15	20:14:00	1216.6	919.4	252.0	283.2	242.9	234.0	527.0	1472.0	240.2	236.2	211.5	233.8	65.2	65.0	66.6	65.2	230.10	30.32	6976.63
2006/11/15	20:15:00	1215.8	920.7	251.9	283.9	243.0	233.6	527.2	1477.2	240.7	236.7	211.5	233.7	64.6	64.6	65.9	65.7	230.20	30.32	6979.66
2006/11/15	20:16:00	1215.9	922.6	251.8	284.1	243.7	233.9	528.5	1468.4	240.3	236.2	211.6	233.8	65.5	64.4	66.0	65.6	230.20	30.31	6977.36
2006/11/15	20:17:00	1216.4	920.4	251.8	284.2	244.0	234.4	527.8	1455.2	240.7	236.2	211.5	233.8	65.4	64.1	66.6	65.6	230.20	30.32	6979.66
2006/11/15	20:18:00	1215.4	922.4	251.9	284.4	243.4	234.1	526.7	1477.3	240.9	236.2	211.5	233.8	65.6	65.6	67.0	65.6	230.20	30.32	6979.66
2006/11/15	20:19:00	1215.1	921.2	252.0	283.5	243.8	234.2	527.7	1466.8	240.9	236.3	211.3	233.7	65.6	65.5	66.8	66.4	230.20	30.32	6979.66
2006/11/15	20:20:00	1216.3	920.8	252.0	284.1	243.8	234.4	528.0	1475.9	240.2	236.5	211.4	233.8	65.5	65.7	67.3	66.1	230.20	30.32	6979.66
2006/11/15	20:21:00	1214.2	921.8	252.0	283.9	243.4	234.2	526.7	1472.9	240.2	236.5	211.6	233.8	65.2	64.8	67.2	65.6	230.20	30.32	6979.66
2006/11/15	20:22:00	1214.6	920.0	252.1	282.9	243.2	234.4	527.5	1480.4	240.6	236.0	211.7	233.9	66.1	64.8	67.3	65.3	230.20	30.32	6979.66
2006/11/15	20:23:00	1217.0	918.8	252.2	283.7	242.7	234.2	526.0	1482.8	240.2	236.0	211.6	233.9	66.4	65.0	67.0	65.3	230.20	30.32	6979.66
2006/11/15	20:24:00	1216.6	919.0	252.1	283.0	243.5	234.2	525.5	1479.4	239.9	236.2	212.0	234.0	65.9	64.8	66.8	64.6	230.20	30.32	6979.66
2006/11/15	20:25:00	1216.6	922.1	252.1	283.8	244.0	234.7	527.2	1483.4	240.6	236.8	211.8	234.0	66.1	66.1	66.8	65.3	230.20	30.32	6979.66
2006/11/15	20:26:00	1216.9	919.6	252.1	283.7	244.3	234.9	527.2	1471.6	241.1	236.7	211.7	234.0	66.3	65.7	66.8	65.7	230.20	30.32	6979.66
2006/11/15	20:27:00	1216.5	922.9	252.2	283.6	244.4	234.4	527.8	1477.2	240.4	236.7	211.7	234.0	66.6	64.0	67.0	65.4	230.20	30.32	6979.66
2006/11/15	20:28:00	1214.9	923.2	252.3	284.3	242.7	234.6	528.0	1449.9	240.8	236.8	211.8	234.0	65.5	64.2	67.0	65.2	230.20	30.32	6979.66
2006/11/15	20:29:00	1215.1	920.2	252.3	283.4	243.2	234.7	527.2	1478.3	240.8	236.7	211.9	234.0	65.5	64.8	66.8	65.5	230.20	30.32	6979.66
2006/11/15	20:30:00	1215.9	921.2	252.4	283.0	243.0	234.6	526.9	1448.9	240.4	236.2	211.7	234.0	66.0	64.0	66.8	65.7	230.20	30.32	6981.97
2006/11/15	20:31:00	1215.8	920.9	252.3	283.8	243.5	234.6	526.9	1473.4	240.8	236.7	211.8	234.0	65.9	64.4	66.1	65.9	230.20	30.32	6979.66
2006/11/15	20:32:00	1215.9	920.5	252.3	284.4	243.7	234.7	527.2	1470.4	240.8	236.5	211.8	234.1	66.6	64.8	66.3	65.6	230.00	30.31	6971.30
2006/11/15	20:33:00	1216.4	918.4	252.5	283.3	243.4	234.7	527.5	1479.5	240.4	236.0	211.7	234.1	66.4	64.4	67.0	65.1	230.10	30.32	6976.63
2006/11/15	20:34:00	1217.5	921.8	252.4	283.5	243.9	234.5	528.0	1468.6	240.3	236.7	211.9	234.0	64.2	64.4	66.3	64.3	230.20	30.32	6979.66
2006/11/15	20:35:00	1216.6	921.3	252.6	284.4	243.7	235.0	528.7	1470.1	241.2	236.8	211.5	234.0	64.4	65.8	67.0	65.6	230.20	30.32	6979.66
2006/11/15	20:36:00	1216.1	921.1	252.4	284.2	244.2	234.9	526.5	1470.9	241.2	237.2	211.6	234.1	66.3	65.5	67.2	66.1	230.10	30.32	6976.63

Heat Rise Test
1st Run

Date	Time	TC1	TC2	TC3	TC4	TC5	TC6	TC7	TC8	TC9	TC10	TC11	TC12	TC13	TC14	TC15	TC16	VDC	Amps	Watts
2006/11/15	20:37:00	1216.4	921.3	252.6	283.9	243.8	234.9	526.4	1480.1	241.1	236.9	211.9	234.1	66.1	65.7	66.6	65.7	230.20	30.32	6979.66
2006/11/15	20:38:00	1218.0	920.7	252.6	282.9	243.2	235.2	528.2	1483.7	240.9	236.7	212.0	234.2	65.2	65.8	66.6	65.0	230.20	30.32	6979.66
2006/11/15	20:39:00	1217.5	919.4	252.7	284.2	243.2	235.0	527.0	1481.3	241.4	237.3	211.8	234.2	64.8	65.8	66.4	65.8	230.10	30.31	6974.33
2006/11/15	20:40:00	1216.5	922.6	252.5	283.9	243.7	235.1	527.2	1460.2	240.7	236.9	212.0	234.2	65.1	64.4	66.3	65.1	228.80	30.23	6916.62
2006/11/15	20:41:00	1215.7	922.1	252.8	283.6	243.9	235.0	528.6	1467.8	240.9	236.7	212.2	234.2	66.3	64.6	66.8	65.6	230.10	30.31	6976.63
2006/11/15	20:42:00	1216.5	920.5	252.7	282.8	243.2	234.9	528.1	1475.0	241.1	236.9	212.1	234.2	65.5	64.3	66.0	65.5	230.00	30.31	6971.30
2006/11/15	20:43:00	1216.4	920.4	252.7	283.5	243.8	234.9	528.4	1470.5	240.8	236.7	212.1	234.2	66.2	64.3	66.3	64.8	229.70	30.18	6950.45
2006/11/15	20:44:00	1216.1	920.0	252.7	283.7	244.5	235.2	529.9	1447.4	240.9	237.0	212.0	234.2	66.3	65.8	66.8	65.5	230.00	30.30	6969.00
2006/11/15	20:45:00	1216.1	920.7	252.7	283.2	244.0	235.1	528.4	1476.9	240.9	236.8	212.0	234.2	65.8	65.4	67.0	65.3	230.10	30.31	6974.33
2006/11/15	20:46:00	1217.1	923.6	252.9	283.1	244.0	235.1	527.7	1473.6	240.8	236.7	212.1	234.2	66.1	64.8	66.3	65.0	230.20	30.22	6962.69
2006/11/15	20:47:00	1216.5	921.3	252.9	283.9	244.6	234.9	528.3	1461.0	241.1	236.7	212.0	234.2	65.4	65.4	66.3	65.0	230.10	30.31	6974.33
2006/11/15	20:48:00	1216.6	921.1	252.8	283.7	244.2	235.1	528.2	1460.0	241.3	236.7	212.0	234.2	64.8	64.6	66.8	65.4	230.00	30.30	6969.00
2006/11/15	20:49:00	1217.3	921.3	253.0	283.6	243.8	235.0	528.1	1463.9	240.9	236.3	212.0	234.1	66.0	64.0	66.6	65.0	230.10	30.29	6972.76
2006/11/15	20:50:00	1216.2	923.1	253.0	283.7	243.8	235.2	527.5	1464.5	240.7	236.5	212.0	234.2	66.2	64.6	66.6	65.2	229.90	30.27	6959.07
2006/11/15	20:51:00	1215.1	922.0	252.9	283.5	243.4	234.9	527.0	1455.4	240.6	236.2	212.0	234.2	65.4	64.3	66.4	64.4	229.10	30.19	6916.53
2006/11/15	20:52:00	1216.2	920.7	252.9	284.1	243.8	234.7	527.0	1461.2	241.1	236.5	212.0	234.2	65.9	65.4	66.2	64.8	229.90	30.28	6961.37
2006/11/15	20:53:00	1216.4	921.5	253.0	284.2	243.7	235.4	527.7	1482.0	240.9	236.5	212.1	234.2	65.7	64.6	66.6	65.2	230.20	30.29	6975.79
2006/11/15	20:54:00	1214.8	922.1	253.0	284.4	243.7	235.2	527.5	1459.4	240.6	236.5	212.2	234.2	66.1	65.1	66.8	65.4	230.20	30.32	6979.66
2006/11/15	20:55:00	1214.7	917.4	253.0	285.1	242.9	235.4	528.6	1468.4	240.4	236.5	212.2	234.2	65.4	65.2	67.0	64.3	230.20	30.32	6979.66
2006/11/15	20:56:00	1215.5	923.4	252.9	283.9	243.2	235.0	528.3	1475.9	240.8	236.3	212.1	234.2	65.8	64.3	66.6	64.6	229.70	30.24	6946.13
2006/11/15	20:57:00	1215.6	921.8	253.0	283.8	243.4	235.2	528.0	1467.1	240.4	236.5	212.2	234.2	65.7	64.8	66.6	64.3	230.20	30.32	6979.66
2006/11/15	20:58:00	1215.6	921.7	253.0	284.8	244.3	235.2	528.0	1465.7	240.9	236.5	212.1	234.2	65.2	65.5	66.3	64.4	229.70	30.24	6946.13
2006/11/15	20:59:00	1216.8	917.4	253.0	283.3	243.5	235.2	528.1	1467.6	240.9	236.7	212.0	234.2	66.2	64.2	66.3	65.0	229.70	30.26	6950.72
2006/11/15	21:00:00	1215.9	921.9	253.1	284.2	243.4	235.5	528.6	1463.7	240.1	236.5	212.1	234.2	65.9	63.7	66.6	64.0	230.00	30.29	6966.70
2006/11/15	21:01:00	1216.1	917.4	253.2	283.9	243.4	235.2	527.2	1462.1	240.4	236.3	212.2	234.2	65.4	65.0	66.2	63.9	230.20	30.32	6979.66
2006/11/15	21:02:00	1216.1	922.1	253.1	283.8	243.2	235.2	528.0	1465.2	240.7	236.5	212.2	234.2	65.5	64.2	66.1	64.4	229.60	30.26	6947.70
2006/11/15	21:03:00	1215.5	921.4	253.3	284.4	243.2	235.5	528.5	1458.8	240.4	236.2	212.2	234.2	65.8	63.7	66.3	64.0	230.10	30.32	6976.63
2006/11/15	21:04:00	1215.9	919.6	253.3	283.6	243.0	235.0	528.6	1466.4	240.0	236.2	212.2	234.2	64.8	63.4	66.0	63.5	230.10	30.32	6976.63
2006/11/15	21:05:00	1216.2	921.0	253.4	283.9	243.9	235.2	529.3	1471.4	240.4	236.2	212.2	234.2	64.8	64.2	65.9	63.7	229.80	30.29	6960.64
2006/11/15	21:06:00	1215.9	919.3	253.4	283.3	243.4	235.2	527.5	1456.2	240.1	236.2	212.1	234.2	65.0	63.6	65.5	63.6	230.20	30.31	6979.66
2006/11/15	21:07:00	1216.1	919.6	253.3	283.8	243.7	235.5	527.3	1472.1	240.4	236.0	212.1	234.2	65.5	63.5	65.8	64.1	230.10	30.32	6976.63
2006/11/15	21:08:00	1215.9	920.9	253.5	284.3	243.4	235.2	529.0	1474.5	240.4	236.2	212.1	234.2	64.4	64.6	66.0	64.0	230.20	30.32	6979.66
2006/11/15	21:09:00	1215.2	919.4	253.3	284.4	242.9	235.5	526.1	1475.1	240.2	236.2	212.1	234.4	64.4	63.7	66.1	64.2	230.20	30.31	6977.36
2006/11/15	21:10:00	1215.1	919.1	253.1	283.7	243.2	235.0	526.7	1461.7	240.0	236.0	212.1	234.2	65.2	64.0	66.0	63.5	230.10	30.29	6969.73
2006/11/15	21:11:00	1215.4	919.4	253.5	284.8	243.2	235.2	528.7	1458.7	239.9	235.9	212.2	234.2	65.4	63.8	65.6	63.5	229.90	30.27	6970.57
2006/11/15	21:12:00	1216.1	920.9	253.5	284.4	243.5	234.6	528.0	1468.0	239.8	236.0	212.0	234.2	65.3	63.7	66.1	63.4	230.00	30.24	6961.25
2006/11/15	21:13:00	1215.5	921.2	253.6	284.8	243.4	235.2	527.0	1463.7	240.4	236.2	212.2	234.4	65.3	64.3	65.8	63.5	229.90	30.28	6968.27
2006/11/15	21:14:00	1215.2	918.4	253.7	283.5	243.7	235.5	527.0	1489.4	240.1	236.2	212.2	234.4	64.8	64.6	66.0	63.6	229.40	30.23	6934.76
2006/11/15	21:15:00	1215.8	922.4	253.7	284.3	243.0	235.7	528.8	1453.9	240.9	236.5	212.2	234.4	64.8	63.1	66.1	64.1	230.00	30.29	6966.70
2006/11/15	21:16:00	1215.1	921.0	253.8	283.7	243.7	235.7	528.6	1449.0	240.3	236.0	212.0	234.4	65.4	64.3	66.6	63.8	230.20	30.31	6977.36
2006/11/15	21:17:00	1216.4	920.1	253.7	283.8	243.7	235.5	529.6	1471.1	240.4	236.3	212.1	234.4	65.1	65.1	66.1	63.8	229.90	30.29	6966.70
2006/11/15	21:18:00	1216.6	921.1	253.6	283.9	242.9	235.5	528.0	1478.8	240.4	236.2	212.2	234.4	65.6	63.9	66.2	63.8	230.20	30.32	6979.66
2006/11/15	21:19:00	1217.7	921.1	253.8	284.4	243.2	235.7	528.0	1471.9	240.3	236.3	212.2	234.4	65.7	63.5	66.2	64.0	229.50	30.17	6924.02
2006/11/15	21:20:00	1217.1	920.9	253.8	284.7	243.5	235.5	527.5	1469.6	240.9	236.3	212.3	234.4	65.7	63.8	66.2	64.1	230.10	30.21	6957.36
2006/11/15	21:21:00	1215.4	922.6	253.9	284.9	243.2	235.9	529.6	1469.6	240.3	236.5	212.3	234.4	64.4	63.4	65.8	63.8	230.10	30.20	6949.02
2006/11/15	21:22:00	1215.1	919.6	254.0	283.3	243.4	235.5	529.7	1470.9	240.8	236.5	212.2	234.5	64.8	63.4	65.7	64.6	229.60	30.20	6933.92
2006/11/15	21:23:00	1215.9	921.7	254.0	284.9	243.2	236.0	528.5	1462.1	240.4	236.5	212.1	234.5	65.5	63.0	66.0	64.0	230.20	30.30	6975.06
2006/11/15	21:24:00	1215.9	922.3	254.0	285.1	243.8	236.0	529.4	1484.7	240.7	236.5	212.1	234.4	65.5	63.9	66.2	64.4	229.80	30.30	6967.54
2006/11/15	21:25:00	1215.4	921.4	254.0	284.6	243.5	235.7	529.0	1467.9	240.7	236.5	212.3	234.5	65.4	63.5	66.1	64.0	230.20	30.31	6977.36
2006/11/15	21:26:00	1215.1	921.2	253.9	284.9	243.4	235.4	529.0	1468.4	240.7	236.2	212.4	234.5	65.5	63.3	65.8	64.3	230.00	30.31	6971.30
2006/11/15	21:27:00	1216.1	922.4	254.1	284.4	243.2	235.7	527.3	1475.7	240.6	236.5	212.2	234.5	65.3	63.7	66.0	64.2	229.70	30.30	6959.91
2006/11/15	21:28:00	1215.9	921.5	254.0	284.8	243.8	236.2	527.7	1467.1	240.4	236.5	212.1	234.5	65.9	64.6	66.4	64.1	230.20	30.12	6939.65
2006/11/15	21:29:00	1216.1	919.9	254.1	284.7	243.7	236.2	529.0	1479.4	241.3	236.5	212.3	234.7	64.8	63.5	66.3	64.3	230.00	30.19	6943.70
2006/11/15	21:30:00	1216.2	919.7	254.0	284.3	243.4	235.7	527.8	1478.2	240.9	236.5	212.2	234.7	64.8	63.5	66.1	64.4	229.40	30.26	6941.64
2006/11/15	21:31:00	1215.6	920.4	254.1	284.4	243.7	236.2	529.7	1473.6	240.8	236.3	212.4	234.7	64.8	63.8	66.3	64.4	230.20	30.28	6973.48
2006/11/15	21:32:00	1216.1	922.0	254.2	285.1	242.9	235.7	528.0	1451.2	240.6	236.2	212.5	234.6	65.0	63.8	66.3	64.3	229.90	30.29	6969.73

Heat Rise Test
1st Run

Date	Time	TC1	TC2	TC3	TC4	TC5	TC6	TC7	TC8	TC9	TC10	TC11	TC12	TC13	TC14	TC15	TC16	VDC	Amps	Watts
2006/11/15	21:33:00	1215.9	917.2	254.1	284.4	243.4	236.0	526.2	1460.9	240.9	236.5	212.4	234.6	65.1	64.8	66.2	64.4	230.10	30.30	6974.33
2006/11/15	21:34:00	1216.9	918.6	254.2	284.1	243.7	236.0	528.5	1479.5	240.8	236.5	212.4	234.6	65.3	64.6	65.8	63.9	230.10	30.29	6969.73
2006/11/15	21:35:00	1215.6	923.0	254.0	285.2	243.4	235.9	529.4	1466.6	240.4	236.3	212.5	234.7	65.4	63.7	66.1	64.1	230.20	30.32	6979.66
2006/11/15	21:36:00	1215.7	922.0	254.2	285.2	243.4	236.2	529.1	1464.4	241.1	236.7	212.4	234.7	65.1	63.5	65.7	64.6	230.20	30.32	6979.66
2006/11/15	21:37:00	1216.1	920.4	254.1	284.6	242.9	236.0	528.8	1458.2	241.6	236.7	212.3	234.6	65.8	64.4	65.1	64.8	230.10	30.31	6976.63
2006/11/15	21:38:00	1215.5	924.9	254.1	284.2	245.1	236.5	529.0	1463.0	241.3	236.9	212.4	234.6	65.7	65.4	66.0	64.6	229.40	30.20	6946.23
2006/11/15	21:39:00	1215.4	923.3	253.9	283.9	244.2	235.5	530.1	1469.3	240.9	236.9	212.4	234.6	65.7	64.2	64.8	64.0	230.20	30.20	6958.08
2006/11/15	21:40:00	1215.4	920.4	254.3	284.6	243.7	236.0	528.2	1465.7	241.6	236.8	212.5	234.6	64.8	65.3	65.1	64.4	229.60	30.23	6940.81
2006/11/15	21:41:00	1215.0	920.7	254.1	285.4	243.7	236.5	528.9	1468.1	241.7	237.2	212.3	234.6	65.9	64.4	66.3	65.0	230.10	30.30	6976.63
2006/11/15	21:42:00	1215.2	920.4	254.4	284.4	244.2	236.7	529.4	1470.1	241.7	237.3	212.5	234.6	66.1	64.3	66.3	64.8	229.30	30.23	6931.74
2006/11/15	21:43:00	1215.4	922.1	254.3	284.7	244.8	236.8	529.6	1474.5	241.6	237.3	212.6	234.6	66.4	66.1	65.9	65.3	230.10	30.31	6974.33
2006/11/15	21:44:00	1215.6	921.8	254.4	284.8	244.7	236.8	529.6	1471.4	241.7	237.6	212.6	234.7	66.1	64.8	66.3	64.6	229.40	30.26	6941.64
2006/11/15	21:45:00	1215.9	920.6	254.5	284.1	244.8	236.5	529.2	1468.1	241.9	237.4	212.8	234.7	65.0	65.6	66.3	64.6	230.10	30.29	6974.33
2006/11/15	21:46:00	1216.6	920.0	254.4	284.1	244.2	236.5	528.6	1475.9	242.2	237.7	212.6	234.7	65.8	64.8	66.6	65.7	230.00	30.30	6975.06
2006/11/15	21:47:00	1216.9	920.8	254.5	284.9	243.5	236.8	529.0	1476.8	241.7	237.8	212.6	234.7	66.0	64.6	66.2	64.6	230.10	30.31	6976.63
2006/11/15	21:48:00	1215.0	920.0	254.5	284.4	244.0	236.7	529.3	1462.4	242.2	237.7	212.8	234.7	64.8	64.8	66.8	64.6	229.70	30.31	6964.50
2006/11/15	21:49:00	1215.4	920.6	254.4	284.3	243.9	236.8	528.9	1473.9	241.7	237.7	212.7	234.7	65.1	64.3	66.6	64.6	230.00	30.27	6964.40
2006/11/15	21:50:00	1215.9	921.0	254.4	285.2	244.2	236.5	529.9	1464.0	242.2	237.9	212.8	234.9	65.2	64.8	66.3	65.0	230.10	30.31	6974.33
2006/11/15	21:51:00	1214.3	923.1	254.2	285.7	244.4	236.7	528.6	1453.8	241.6	237.4	212.9	234.9	66.2	64.3	66.0	64.3	230.20	30.32	6979.66
2006/11/15	21:52:00	1214.5	920.7	254.6	285.2	244.9	237.0	529.3	1468.9	242.1	237.5	212.9	234.9	65.4	65.1	66.8	65.3	230.20	30.32	6979.66
2006/11/15	21:53:00	1215.5	921.8	254.6	284.6	245.7	237.0	529.3	1460.0	242.2	237.9	212.9	234.9	66.2	65.0	67.1	64.8	230.20	30.32	6979.66
2006/11/15	21:54:00	1215.5	921.8	254.7	285.2	244.4	236.9	528.5	1459.7	242.2	237.7	213.1	234.9	65.2	64.8	67.0	64.6	230.20	30.31	6977.36
2006/11/15	21:55:00	1214.3	921.5	254.5	285.2	244.8	236.8	529.1	1453.2	242.2	238.0	212.9	234.9	65.5	64.6	66.4	65.5	230.20	30.32	6979.66
2006/11/15	21:56:00	1214.3	920.5	254.6	284.8	243.7	236.8	529.3	1452.4	241.9	237.7	213.1	235.0	66.1	64.2	66.4	65.0	230.20	30.32	6979.66
2006/11/15	21:57:00	1214.9	920.1	254.7	285.4	244.7	236.8	529.4	1464.5	242.2	237.5	212.8	235.0	65.3	64.6	66.8	65.0	230.20	30.27	6971.18
2006/11/15	21:58:00	1214.9	923.6	254.4	285.6	243.9	237.0	528.7	1457.8	241.7	237.7	213.0	235.1	65.7	65.0	67.0	64.8	230.00	30.27	6962.10
2006/11/15	21:59:00	1215.2	922.7	254.5	285.1	243.8	236.8	528.6	1438.2	241.6	237.4	213.0	235.0	66.3	64.0	66.8	64.4	230.00	30.30	6969.00
2006/11/15	22:00:00	1215.2	920.7	254.8	285.4	244.8	236.9	529.6	1479.2	242.4	237.8	212.9	234.9	65.9	65.7	67.2	64.8	230.10	30.31	6977.36
2006/11/15	22:01:00	1215.4	919.9	254.7	284.3	244.4	236.8	529.1	1480.4	242.4	238.0	212.8	235.0	65.9	65.0	66.8	65.3	230.00	30.29	6966.70
2006/11/15	22:02:00	1215.5	921.6	254.8	285.7	244.8	236.5	529.6	1458.0	241.9	237.8	213.1	235.0	64.6	64.8	66.6	64.3	230.00	30.30	6969.00
2006/11/15	22:03:00	1215.6	922.1	254.7	284.7	244.8	236.7	529.7	1461.3	242.4	238.1	212.9	235.1	64.0	65.0	65.9	64.6	229.70	30.29	6957.61
2006/11/15	22:04:00	1216.1	920.4	254.7	284.9	244.2	237.0	528.4	1473.0	241.6	237.6	213.2	235.1	66.3	64.8	66.6	65.2	229.60	30.25	6957.61
2006/11/15	22:05:00	1215.6	922.7	254.9	285.6	245.0	237.3	529.4	1460.2	242.2	238.0	213.1	235.1	65.1	65.1	66.6	65.1	230.00	30.29	6966.70
2006/11/15	22:06:00	1215.9	920.2	254.9	284.9	244.7	237.3	529.9	1475.3	241.9	237.8	213.1	235.2	66.2	65.1	67.1	65.3	229.70	30.18	6953.47
2006/11/15	22:07:00	1214.9	919.6	254.9	284.7	244.3	237.4	529.6	1469.5	242.2	238.0	213.1	235.1	64.4	65.0	66.1	65.4	229.70	30.21	6939.24
2006/11/15	22:08:00	1215.2	921.9	254.9	284.9	244.0	237.0	530.2	1459.9	242.1	238.0	213.0	235.1	65.1	65.2	65.7	65.1	229.80	30.28	6958.34
2006/11/15	22:09:00	1215.8	920.9	255.1	284.9	244.9	236.2	530.7	1454.8	242.2	237.8	213.2	235.1	66.0	65.1	66.4	65.0	230.10	30.31	6974.33
2006/11/15	22:10:00	1215.0	920.5	255.1	284.4	244.7	236.9	530.2	1469.3	241.7	238.1	213.2	235.1	65.5	65.0	66.4	65.8	229.40	30.24	6937.06
2006/11/15	22:11:00	1215.1	920.0	254.9	284.9	244.9	237.4	530.1	1477.5	242.2	237.8	213.0	235.1	65.3	65.1	66.6	64.8	230.10	30.31	6974.33
2006/11/15	22:12:00	1216.5	920.7	254.8	284.6	245.1	237.2	529.6	1447.9	242.2	238.0	213.0	235.2	65.4	65.2	66.2	64.8	230.00	30.26	6959.80
2006/11/15	22:13:00	1216.6	921.1	254.9	284.8	245.4	237.2	528.6	1463.6	241.7	238.1	213.0	235.2	66.1	64.4	66.8	65.1	230.10	30.31	6976.63
2006/11/15	22:14:00	1216.1	920.8	254.9	284.8	245.4	237.4	529.6	1475.1	242.1	237.9	213.2	235.2	65.5	65.0	66.6	65.1	229.90	30.29	6972.76
2006/11/15	22:15:00	1215.5	921.5	254.9	285.2	244.6	237.2	529.8	1467.0	242.7	238.2	213.2	235.2	65.5	65.1	66.6	65.6	229.80	30.29	6965.24
2006/11/15	22:16:00	1215.1	922.9	254.9	284.9	244.9	237.0	530.2	1476.4	242.9	238.5	213.1	235.2	65.1	65.9	66.0	65.7	230.00	30.28	6964.40
2006/11/15	22:17:00	1215.9	919.6	254.9	284.9	244.9	237.0	529.4	1475.8	241.9	238.3	213.1	235.2	65.7	65.1	66.6	64.8	229.20	30.21	6924.13
2006/11/15	22:18:00	1217.2	921.6	255.2	284.3	244.9	237.2	529.8	1478.3	242.1	238.1	213.2	235.2	65.3	64.2	66.8	65.3	229.70	30.20	6936.94
2006/11/15	22:19:00	1215.8	920.7	255.2	285.1	244.2	237.0	529.7	1473.6	242.4	237.6	213.2	235.2	65.3	63.7	66.8	64.6	229.70	30.25	6948.43
2006/11/15	22:20:00	1215.9	920.0	255.3	285.2	244.3	237.4	529.9	1477.4	241.9	237.6	213.2	235.2	65.4	64.4	66.4	63.9	229.90	30.30	6965.97
2006/11/15	22:21:00	1216.9	921.6	255.2	285.6	243.5	237.2	528.8	1485.5	242.2	238.2	213.2	235.2	65.5	63.9	65.5	65.2	230.00	30.28	6964.40
2006/11/15	22:22:00	1216.6	922.6	255.2	285.4	244.2	236.9	531.2	1464.4	242.2	238.2	213.2	235.2	65.4	64.2	66.0	65.1	229.90	30.27	6965.97
2006/11/15	22:23:00	1215.5	919.9	255.3	285.2	243.7	237.5	529.9	1456.8	241.6	238.1	213.2	235.2	65.2	64.3	66.1	63.7	229.60	30.20	6942.98
2006/11/15	22:24:00	1215.8	921.1	255.1	285.9	243.9	237.2	529.9	1464.7	242.5	238.5	213.2	235.2	65.4	65.6	66.3	64.8	229.70	30.27	6953.02
2006/11/15	22:25:00	1215.9	920.8	255.2	284.4	244.2	236.9	530.1	1459.2	242.4	238.1	213.2	235.2	66.0	64.4	66.4	64.4	229.40	30.23	6934.76
2006/11/15	22:26:00	1216.2	921.9	255.4	284.7	244.4	236.7	529.9	1460.8	242.2	238.0	213.4	235.4	65.3	64.3	66.6	64.3	229.90	30.27	6963.67
2006/11/15	22:27:00	1216.2	920.0	255.3	285.9	244.2	237.0	529.3	1475.1	242.1	237.9	213.2	235.2	65.9	64.3	65.9	64.4	229.90	30.26	6956.77
2006/11/15	22:28:00	1215.9	921.9	255.4	284.8	245.1	237.6	530.4	1467.6	242.1	238.3	213.2	235.2	66.0	64.8	66.4	64.4	229.90	30.18	6941.40

Heat Rise Test
1st Run

Date	Time	TC1	TC2	TC3	TC4	TC5	TC6	TC7	TC8	TC9	TC10	TC11	TC12	TC13	TC14	TC15	TC16	VDC	Amps	Watts
2006/11/15	22:29:00	1216.1	922.4	255.4	284.8	245.4	237.3	529.9	1461.2	242.2	238.2	213.4	235.4	65.6	64.2	66.6	65.1	229.70	30.29	6957.61
2006/11/15	22:30:00	1216.1	922.4	255.4	283.9	244.4	237.2	530.2	1463.2	242.1	238.1	213.4	235.2	65.2	64.2	66.1	64.0	230.10	30.31	6974.33
2006/11/15	22:31:00	1214.9	920.4	255.4	283.9	244.3	237.2	529.9	1471.0	242.5	238.2	213.2	235.2	64.1	64.1	65.4	64.1	230.10	30.31	6974.33
2006/11/15	22:32:00	1215.4	919.9	255.4	284.8	244.6	237.5	530.2	1463.7	242.2	237.7	213.2	235.2	65.4	63.4	66.0	64.4	230.00	30.27	6969.00
2006/11/15	22:33:00	1216.6	919.3	255.4	285.2	244.3	237.0	528.0	1474.3	241.9	237.5	213.2	235.2	65.7	63.4	66.1	63.5	230.10	30.31	6974.33
2006/11/15	22:34:00	1215.6	923.7	255.4	285.4	244.4	237.2	529.8	1480.0	241.6	237.6	213.4	235.2	65.3	63.7	65.2	62.8	230.10	30.30	6972.03
2006/11/15	22:35:00	1215.8	923.5	255.3	285.4	244.9	237.6	530.7	1454.4	242.4	238.2	213.4	235.4	65.9	64.3	64.8	63.9	230.10	30.32	6976.63
2006/11/15	22:36:00	1216.1	920.7	255.6	284.2	245.2	237.0	530.9	1470.4	242.7	238.1	213.6	235.5	66.0	64.3	66.1	64.3	230.20	30.32	6979.66
2006/11/15	22:37:00	1216.4	922.0	255.7	285.7	244.9	237.6	530.7	1476.4	242.7	238.1	213.5	235.5	65.6	64.6	65.0	64.3	229.30	30.22	6929.45
2006/11/15	22:38:00	1215.4	920.8	255.7	285.2	245.0	238.0	531.5	1458.2	242.4	238.6	213.7	235.7	65.0	64.4	65.4	64.0	229.80	30.27	6956.05
2006/11/15	22:39:00	1215.2	920.8	255.9	285.9	245.0	238.0	530.4	1461.2	242.7	238.5	213.6	235.7	65.5	64.6	65.8	64.2	230.10	30.30	6972.03
2006/11/15	22:40:00	1215.9	921.2	255.9	285.7	244.6	237.9	530.2	1457.6	243.4	238.9	213.5	235.7	65.5	65.6	66.0	65.5	229.40	30.26	6941.64
2006/11/15	22:41:00	1216.3	919.4	255.7	285.4	245.0	237.9	529.9	1469.3	242.5	238.5	213.7	235.7	65.6	63.8	66.2	65.3	230.10	30.31	6974.33
2006/11/15	22:42:00	1216.1	922.4	255.9	285.2	244.2	237.7	530.7	1461.5	242.4	238.6	213.9	235.7	65.4	63.6	66.0	63.8	229.90	30.28	6961.37
2006/11/15	22:43:00	1215.5	923.3	255.9	285.1	244.8	237.8	531.4	1476.9	242.7	238.2	213.7	235.7	64.8	63.9	65.8	63.8	229.60	30.25	6945.40
2006/11/15	22:44:00	1215.2	921.8	255.7	284.9	243.7	237.6	530.5	1447.2	242.4	238.2	213.7	235.7	65.5	63.6	65.7	63.3	229.80	30.27	6956.05
2006/11/15	22:45:00	1215.8	920.4	255.6	285.4	244.3	236.8	530.5	1466.5	241.7	238.1	213.9	235.7	65.3	64.4	65.6	63.2	230.10	30.31	6974.33
2006/11/15	22:46:00	1215.4	918.0	255.7	285.2	244.2	237.5	530.4	1456.2	241.9	237.9	213.7	235.5	65.2	63.3	65.6	63.3	230.10	30.30	6974.33
2006/11/15	22:47:00	1215.4	919.4	255.7	285.6	244.7	237.5	531.2	1451.0	241.7	237.8	213.7	235.5	65.0	63.1	65.5	63.3	229.90	30.28	6964.40
2006/11/15	22:48:00	1215.2	921.2	255.9	286.2	244.9	237.7	529.3	1467.5	241.9	238.0	213.7	235.5	65.6	63.0	65.7	63.3	230.20	30.32	6979.66
2006/11/15	22:49:00	1215.2	922.6	255.7	285.6	244.8	237.7	530.9	1457.7	241.7	237.7	213.7	235.5	65.5	62.8	65.5	63.3	230.20	30.32	6979.66
2006/11/15	22:50:00	1215.6	921.7	256.1	285.7	245.1	237.7	531.2	1472.0	242.4	238.0	213.6	235.5	65.3	64.0	65.9	63.8	230.10	30.27	6971.18
2006/11/15	22:51:00	1216.2	918.7	255.7	285.6	244.0	237.5	529.1	1466.9	241.9	237.7	213.6	235.5	64.4	64.1	64.8	63.0	230.00	30.32	6973.60
2006/11/15	22:52:00	1214.6	921.1	255.9	284.9	245.5	237.6	530.9	1469.4	242.7	238.4	213.5	235.5	64.8	63.9	64.6	63.2	230.20	30.31	6977.36
2006/11/15	22:53:00	1216.1	922.7	255.9	284.9	244.2	238.1	529.7	1468.3	242.5	238.8	213.4	235.5	65.4	63.3	66.3	64.6	230.00	30.27	6962.10
2006/11/15	22:54:00	1216.1	920.1	255.9	285.2	244.2	237.7	528.6	1471.7	242.9	238.6	213.6	235.5	64.6	63.8	65.4	64.1	230.20	30.31	6979.66
2006/11/15	22:55:00	1215.6	920.1	255.9	285.4	244.0	238.1	530.4	1482.8	243.2	238.7	213.6	235.5	65.2	65.5	65.5	64.6	229.90	30.27	6965.13
2006/11/15	22:56:00	1215.6	922.1	255.9	285.2	245.2	238.2	530.9	1458.9	242.4	238.4	213.7	235.7	65.9	64.8	65.8	64.2	229.80	30.28	6958.34
2006/11/15	22:57:00	1215.8	919.7	256.1	285.7	245.2	237.9	529.9	1461.3	242.7	238.7	213.9	235.7	65.9	65.6	65.5	64.0	229.10	30.27	6934.86
2006/11/15	22:58:00	1215.9	923.3	256.2	286.2	244.2	238.3	530.4	1457.1	242.9	238.8	213.7	235.7	65.4	64.8	65.1	64.6	230.00	30.26	6966.70
2006/11/15	22:59:00	1215.9	919.4	256.1	285.4	245.2	238.1	530.2	1463.5	242.7	238.6	214.0	235.7	66.0	64.8	65.5	64.4	230.00	30.24	6964.40
2006/11/15	23:00:00	1215.4	919.9	256.1	285.6	245.3	238.1	530.2	1460.6	242.9	239.0	213.9	235.7	65.7	64.6	65.2	64.8	229.90	30.27	6963.67
2006/11/15	23:01:00	1216.4	921.7	256.2	286.0	245.4	238.0	530.7	1466.0	241.9	238.6	214.0	235.7	65.6	64.8	65.8	63.4	230.00	30.17	6951.17
2006/11/15	23:02:00	1215.9	921.3	256.1	285.1	243.7	237.9	530.1	1481.8	241.9	238.5	213.9	235.7	64.6	64.6	65.1	63.3	229.80	30.30	6962.94
2006/11/15	23:03:00	1215.1	923.2	256.2	284.9	244.2	237.6	530.2	1468.4	241.7	238.3	213.7	235.7	65.1	64.2	65.8	63.3	229.60	30.23	6940.81
2006/11/15	23:04:00	1215.4	919.4	256.2	285.4	244.3	238.0	530.2	1447.4	242.4	238.3	213.7	235.7	64.6	64.6	65.8	63.7	229.90	30.23	6949.88
2006/11/15	23:05:00	1215.8	921.8	256.2	286.7	244.2	237.6	530.5	1447.4	241.9	238.2	214.0	235.7	65.2	64.8	65.8	63.3	230.20	30.31	6977.36
2006/11/15	23:06:00	1215.1	922.7	256.1	285.1	244.5	237.4	530.2	1455.6	242.1	238.1	214.0	235.7	65.0	65.0	65.7	63.6	230.20	30.32	6979.66
2006/11/15	23:07:00	1214.9	920.0	256.4	285.4	244.3	237.8	530.2	1475.7	242.2	238.1	213.9	235.7	65.6	64.0	65.8	63.7	230.20	30.32	6979.66
2006/11/15	23:08:00	1216.1	922.6	256.2	286.0	243.9	237.8	532.3	1463.9	242.2	238.0	214.0	235.7	65.3	63.9	65.9	63.4	230.20	30.32	6979.66
2006/11/15	23:09:00	1215.9	919.6	256.2	285.1	244.2	237.6	531.7	1472.2	242.1	238.0	214.0	235.7	65.8	62.8	65.6	63.5	230.20	30.32	6979.66
2006/11/15	23:10:00	1215.8	921.3	256.1	285.4	244.2	238.1	531.6	1456.9	242.1	238.2	214.1	235.7	65.4	64.3	65.8	63.3	230.20	30.31	6979.66
2006/11/15	23:11:00	1215.9	922.1	256.4	284.9	244.3	237.5	531.0	1459.1	242.2	238.2	214.0	235.7	65.0	64.6	65.8	63.6	230.20	30.32	6979.66
2006/11/15	23:12:00	1216.1	919.9	256.4	286.2	244.6	238.1	530.2	1480.9	242.1	238.1	213.9	235.7	64.8	64.6	66.1	63.5	230.20	30.32	6979.66
2006/11/15	23:13:00	1215.1	918.9	256.4	285.7	244.7	237.7	531.2	1458.7	242.2	238.1	214.0	235.7	65.0	64.1	65.6	63.4	230.20	30.32	6979.66
2006/11/15	23:14:00	1215.6	919.0	256.2	285.7	245.3	237.8	529.7	1459.2	242.4	237.9	214.1	235.7	65.4	63.9	65.5	63.7	230.20	30.31	6977.36
2006/11/15	23:15:00	1215.9	919.7	256.5	285.7	245.2	238.0	530.2	1482.3	242.2	238.0	214.1	235.7	65.2	63.8	65.4	63.3	230.20	30.32	6979.66
2006/11/15	23:16:00	1215.0	920.6	256.4	285.4	244.5	237.6	530.7	1468.6	242.2	238.4	214.1	235.7	64.8	63.9	65.4	63.4	230.20	30.32	6979.66
2006/11/15	23:17:00	1215.2	921.8	256.4	285.4	244.5	238.0	530.9	1455.9	242.2	238.1	214.1	235.7	65.1	63.5	65.7	63.3	230.20	30.32	6979.66
2006/11/15	23:18:00	1215.8	922.6	256.7	285.4	244.3	238.2	530.2	1480.4	242.4	238.1	214.1	235.9	65.0	64.1	66.0	63.5	230.20	30.32	6979.66
2006/11/15	23:19:00	1215.6	921.3	256.4	285.7	244.6	237.6	529.4	1480.9	242.1	237.9	214.1	235.9	65.2	63.2	65.5	63.0	230.20	30.32	6979.66
2006/11/15	23:20:00	1215.4	922.1	256.5	286.2	244.6	237.7	531.2	1482.1	242.1	237.9	214.1	235.9	65.1	63.3	65.5	63.2	230.20	30.31	6979.66
2006/11/15	23:21:00	1215.7	921.6	256.4	285.4	244.2	238.0	530.5	1473.4	242.2	237.8	214.1	235.9	65.0	65.6	65.6	63.3	230.20	30.32	6979.66
2006/11/15	23:22:00	1215.5	922.0	256.7	285.9	244.2	238.6	531.6	1470.9	241.9	237.9	214.2	235.9	65.4	65.3	65.6	63.3	230.20	30.32	6979.66
2006/11/15	23:23:00	1215.6	922.9	256.5	286.0	245.0	238.9	531.5	1471.3	242.2	238.1	214.2	235.9	65.6	64.4	66.3	63.8	230.10	30.31	6974.33
2006/11/15	23:24:00	1215.1	920.8	256.7	285.4	245.1	238.3	530.7	1447.9	242.2	238.2	214.1	235.9	65.9	64.0	66.6	63.7	230.20	30.32	6979.66

Heat Rise Test
1st Run

Date	Time	TC1	TC2	TC3	TC4	TC5	TC6	TC7	TC8	TC9	TC10	TC11	TC12	TC13	TC14	TC15	TC16	VDC	Amps	Watts
2006/11/15	23:25:00	1215.1	921.0	256.7	285.7	244.2	238.3	532.2	1493.1	241.9	238.0	214.1	235.9	65.4	63.7	65.7	63.3	230.10	30.31	6974.33
2006/11/15	23:26:00	1215.4	920.0	256.7	285.4	245.0	238.4	531.6	1481.8	242.2	238.1	214.2	235.9	65.1	64.2	65.7	63.2	230.20	30.31	6977.36
2006/11/15	23:27:00	1215.4	918.7	256.7	285.6	244.4	238.1	530.9	1477.8	242.4	238.0	214.1	235.9	65.4	63.8	65.6	63.3	230.20	30.31	6977.36
2006/11/15	23:28:00	1215.6	921.6	256.7	285.9	244.7	238.8	530.7	1491.4	242.4	238.0	214.2	235.9	65.4	64.3	65.6	63.1	230.20	30.32	6979.66
2006/11/15	23:29:00	1215.1	922.1	256.9	286.2	244.4	238.6	529.6	1472.4	242.2	238.1	214.2	236.0	64.8	63.5	65.5	63.4	230.20	30.32	6979.66
2006/11/15	23:30:00	1215.7	920.2	256.9	285.4	244.8	238.5	531.7	1471.9	242.2	238.0	214.1	235.9	64.8	63.8	65.6	63.4	230.20	30.32	6979.66
2006/11/15	23:31:00	1215.6	922.4	256.9	285.7	245.5	237.9	529.4	1488.7	242.2	238.2	214.1	236.0	65.6	64.2	65.2	63.3	230.20	30.31	6977.36
2006/11/15	23:32:00	1216.6	921.5	256.9	286.2	244.4	239.1	529.9	1488.6	242.7	238.6	214.1	235.9	65.0	64.2	65.9	63.7	230.10	30.31	6976.63
2006/11/15	23:33:00	1217.1	923.2	256.9	285.2	245.3	238.9	529.9	1494.1	242.5	238.7	214.1	236.0	65.0	63.3	65.2	64.3	230.20	30.31	6977.36
2006/11/15	23:34:00	1216.3	922.1	256.9	286.2	245.2	238.0	531.2	1486.4	242.7	238.5	214.2	236.0	64.8	62.2	64.8	63.6	230.20	30.31	6977.36
2006/11/15	23:35:00	1216.1	919.4	256.7	285.4	244.3	238.3	531.2	1495.0	242.4	238.1	214.2	236.0	65.1	62.2	65.4	62.8	229.10	30.24	6927.98
2006/11/15	23:36:00	1216.1	921.9	256.9	285.4	244.3	238.3	529.7	1475.4	242.2	237.9	214.2	235.9	65.0	63.0	65.4	62.8	230.10	30.29	6972.76
2006/11/15	23:37:00	1215.9	921.5	256.9	285.4	244.0	238.7	531.6	1475.9	242.2	238.4	214.2	236.0	64.8	65.9	64.8	63.0	230.10	30.31	6974.33
2006/11/15	23:38:00	1216.1	921.5	256.4	286.0	245.0	238.7	531.5	1483.9	242.4	238.6	214.0	236.0	66.3	64.8	64.8	64.6	229.20	30.15	6910.38
2006/11/15	23:39:00	1215.9	920.0	256.9	285.2	245.0	239.0	531.5	1495.8	242.4	238.4	214.2	236.0	64.6	64.8	65.9	63.5	229.90	30.28	6961.37
2006/11/15	23:40:00	1215.9	922.6	257.0	286.2	244.9	239.0	531.7	1485.7	242.4	238.3	214.2	236.0	64.1	64.3	65.7	63.6	229.20	30.20	6921.84
2006/11/15	23:41:00	1215.9	921.5	257.0	286.3	245.0	238.7	532.1	1481.2	242.4	238.4	214.4	236.0	64.3	64.4	65.0	63.0	230.20	30.31	6977.36
2006/11/15	23:42:00	1215.6	924.0	256.7	285.9	244.6	239.1	530.9	1489.3	242.4	238.3	214.2	236.0	65.9	65.2	64.6	62.8	230.10	30.31	6976.63
2006/11/15	23:43:00	1215.7	921.1	256.9	284.4	245.0	238.9	530.2	1493.6	243.2	238.7	214.4	236.0	64.8	64.2	65.7	63.9	230.10	30.31	6974.33
2006/11/15	23:44:00	1216.1	920.8	257.0	287.1	245.2	239.4	530.7	1490.8	243.7	238.9	214.2	236.2	65.0	63.8	65.9	64.6	230.00	30.28	6964.40
2006/11/15	23:45:00	1215.7	920.4	257.0	286.5	245.0	238.9	530.9	1456.7	242.7	238.4	214.4	236.2	65.5	63.5	66.0	63.8	230.10	30.23	6955.92
2006/11/15	23:46:00	1215.4	922.4	257.0	285.9	244.5	238.4	530.9	1467.4	242.4	238.4	214.5	236.2	65.3	63.5	65.4	63.2	229.90	30.28	6961.37
2006/11/15	23:47:00	1215.1	922.1	257.0	285.6	245.0	238.9	530.9	1491.9	242.7	238.1	214.4	236.2	65.2	63.6	65.5	63.6	230.00	30.29	6969.73
2006/11/15	23:48:00	1215.8	921.0	257.0	285.9	245.1	238.6	532.3	1470.0	242.7	238.5	214.5	236.2	65.4	63.0	65.8	63.6	230.00	30.30	6969.00
2006/11/15	23:49:00	1216.2	922.4	257.2	285.2	245.0	238.4	531.9	1505.9	242.4	238.4	214.4	236.2	65.4	63.5	65.4	63.4	229.70	30.28	6955.32
2006/11/15	23:50:00	1216.2	922.1	257.2	285.4	244.9	239.1	531.8	1493.3	242.4	238.4	214.4	236.2	65.6	63.9	65.7	63.6	229.90	30.27	6961.37
2006/11/15	23:51:00	1215.8	922.4	257.2	285.2	244.5	239.0	530.5	1495.6	243.2	238.5	214.5	236.2	65.4	63.3	65.8	63.9	229.90	30.26	6956.77
2006/11/15	23:52:00	1215.1	922.9	257.2	286.0	244.6	239.2	532.0	1477.4	243.7	238.9	214.5	236.2	65.8	64.0	65.6	64.8	230.20	30.31	6979.66
2006/11/15	23:53:00	1215.1	919.9	257.4	285.7	245.3	239.7	532.8	1491.1	243.7	239.0	214.5	236.2	66.2	63.6	66.0	65.3	230.00	30.29	6972.03
2006/11/15	23:54:00	1216.1	923.4	257.4	284.9	245.2	239.3	530.7	1469.9	243.4	239.0	214.5	236.3	66.3	64.1	66.6	64.6	229.90	30.27	6959.07
2006/11/15	23:55:00	1216.2	922.1	257.4	286.2	245.1	239.1	532.4	1479.0	242.7	238.7	214.7	236.3	65.7	63.6	65.9	63.5	230.00	30.29	6966.70
2006/11/15	23:56:00	1216.1	920.4	257.5	286.4	245.1	239.2	532.5	1488.1	242.9	238.8	214.7	236.2	65.7	63.8	66.4	64.1	229.50	30.28	6958.44
2006/11/15	23:57:00	1216.1	922.3	257.4	285.9	245.4	238.9	531.6	1480.0	242.9	238.6	214.7	236.3	65.9	63.1	66.4	64.0	229.70	30.23	6948.43
2006/11/15	23:58:00	1216.1	923.8	257.4	286.7	245.3	239.3	532.7	1452.3	242.9	238.5	214.7	236.2	65.7	62.6	66.4	63.5	229.70	30.24	6946.13
2006/11/15	23:59:00	1215.4	923.0	257.4	286.5	245.3	239.1	531.7	1490.9	242.9	238.6	214.7	236.2	65.5	62.6	65.9	63.9	229.70	30.26	6950.72
2006/11/16	00:00:00	1215.0	922.0	257.5	286.7	245.7	239.6	530.4	1477.2	242.7	238.6	214.7	236.2	65.7	63.7	66.3	63.8	229.60	30.18	6929.33
2006/11/16	00:01:00	1215.8	922.7	257.5	285.4	245.0	239.9	532.9	1486.0	243.4	238.7	214.6	236.3	64.8	64.4	65.2	64.4	230.20	30.32	6979.66
2006/11/16	00:02:00	1216.6	922.7	257.7	286.3	245.5	239.5	531.6	1483.6	243.2	239.1	214.7	236.5	65.1	63.3	64.6	64.6	230.20	30.31	6977.36
2006/11/16	00:03:00	1215.9	923.2	257.7	286.5	245.1	239.4	532.7	1482.6	243.4	238.7	214.7	236.5	65.4	63.1	65.9	64.0	230.00	30.23	6955.92
2006/11/16	00:04:00	1215.9	922.0	257.5	286.9	245.4	239.5	531.4	1500.9	243.5	238.7	214.7	236.5	65.4	63.3	65.6	63.6	229.40	30.17	6921.00
2006/11/16	00:05:00	1215.9	918.6	257.4	285.7	245.3	238.9	531.4	1490.9	243.4	238.6	214.6	236.5	65.8	63.3	65.8	64.1	229.50	30.19	6928.61
2006/11/16	00:06:00	1215.9	922.1	257.7	286.4	245.6	239.6	532.2	1485.9	242.9	238.6	214.7	236.5	65.2	63.1	66.1	63.6	229.90	30.27	6959.07
2006/11/16	00:07:00	1215.9	922.0	257.7	287.1	245.6	239.2	532.7	1505.9	242.9	238.5	214.7	236.5	65.2	62.8	65.6	63.7	229.90	30.27	6959.07
2006/11/16	00:08:00	1216.6	920.9	257.7	286.2	245.8	239.7	532.4	1491.4	242.9	238.4	214.7	236.5	65.2	63.1	66.1	63.0	229.40	30.26	6941.64
2006/11/16	00:09:00	1215.9	922.4	257.7	286.3	244.8	239.3	532.5	1476.0	243.0	238.6	214.7	236.5	64.8	63.7	65.7	63.3	229.90	30.26	6965.97
2006/11/16	00:10:00	1214.7	924.2	257.5	286.7	245.3	239.2	532.2	1488.6	242.9	238.7	214.7	236.5	64.8	63.5	65.8	63.4	230.00	30.28	6964.40
2006/11/16	00:11:00	1214.6	923.3	257.5	286.9	245.3	239.6	530.7	1500.6	242.7	238.6	214.7	236.5	65.4	63.9	66.2	63.8	229.70	30.24	6946.13
2006/11/16	00:12:00	1214.7	921.7	257.7	284.9	245.3	239.7	532.3	1511.4	243.2	238.3	214.5	236.5	65.2	63.6	66.1	63.7	229.90	30.26	6963.67
2006/11/16	00:13:00	1216.5	921.9	257.7	285.4	245.3	239.3	530.9	1495.5	243.2	238.6	214.7	236.5	65.4	63.2	65.4	63.8	229.50	30.22	6935.49
2006/11/16	00:14:00	1215.7	921.9	257.8	285.9	245.3	239.3	532.3	1504.6	242.7	238.5	214.6	236.5	65.8	63.2	65.8	63.7	229.80	30.26	6956.77
2006/11/16	00:15:00	1216.6	919.4	257.7	285.9	244.9	239.0	531.7	1503.0	243.4	238.6	214.6	236.5	65.5	63.9	66.6	64.0	228.70	30.14	6902.06
2006/11/16	00:16:00	1216.1	923.0	257.7	286.8	245.6	239.7	532.1	1500.6	243.4	239.1	214.5	236.5	64.8	64.3	65.0	64.3	228.80	30.23	6916.62
2006/11/16	00:17:00	1215.2	920.4	257.8	287.0	245.1	239.8	531.3	1545.1	243.4	238.7	214.6	236.5	65.7	63.9	66.1	64.1	229.70	30.29	6957.61
2006/11/16	00:18:00	1216.5	921.8	257.8	286.2	245.4	239.5	532.3	1539.9	243.2	238.7	214.7	236.5	65.1	63.1	65.6	64.0	229.70	30.27	6953.02
2006/11/16	00:19:00	1215.5	919.4	258.0	286.7	245.4	239.3	531.5	1537.9	242.7	238.2	214.5	236.5	65.2	63.4	65.7	63.9	229.90	30.29	6966.70
2006/11/16	00:20:00	1215.2	921.8	258.0	285.4	245.2	239.3	530.4	1520.5	243.5	238.5	214.7	236.5	65.5	63.4	66.1	63.8	230.10	30.31	6976.63

Heat Rise Test
1st Run

Date	Time	TC1	TC2	TC3	TC4	TC5	TC6	TC7	TC8	TC9	TC10	TC11	TC12	TC13	TC14	TC15	TC16	VDC	Amps	Watts
2006/11/16	00:21:00	1215.5	921.8	257.8	286.5	244.8	239.7	533.2	1555.8	242.7	238.6	214.7	236.5	65.7	63.1	65.8	63.9	230.20	30.31	6979.66
2006/11/16	00:22:00	1216.9	920.0	257.9	286.0	245.5	239.7	531.7	1537.5	242.9	238.3	214.6	236.5	65.8	62.8	66.1	63.7	230.00	30.31	6971.30
2006/11/16	00:23:00	1216.3	921.9	257.7	286.4	245.6	239.4	531.5	1547.3	242.4	238.6	214.7	236.5	65.5	62.4	65.6	63.8	230.10	30.29	6972.03
2006/11/16	00:24:00	1216.2	917.7	257.8	286.4	245.3	239.5	531.8	1522.3	242.7	238.4	214.7	236.5	65.5	62.8	66.1	63.4	230.00	30.27	6971.30
2006/11/16	00:25:00	1215.1	918.9	257.7	285.6	245.4	239.5	531.2	1560.0	242.7	238.3	214.7	236.5	65.1	63.1	66.0	62.8	229.90	30.29	6963.67
2006/11/16	00:26:00	1216.2	916.9	258.0	285.4	245.9	240.0	530.4	1531.6	243.2	238.6	214.9	236.5	65.3	63.8	65.9	63.3	230.00	30.29	6969.00
2006/11/16	00:27:00	1215.6	921.1	258.2	284.9	245.8	239.8	532.2	1526.5	242.9	238.5	214.9	236.7	65.0	63.6	65.7	63.2	229.90	30.29	6965.97
2006/11/16	00:28:00	1213.6	923.1	257.7	287.0	246.1	239.9	529.2	1517.6	243.4	238.7	214.9	236.7	65.8	62.6	66.1	63.3	230.00	30.30	6971.30
2006/11/16	00:29:00	1213.6	923.1	258.2	285.9	245.5	239.7	531.5	1521.6	243.2	238.5	214.9	236.7	65.5	63.0	65.9	63.3	230.10	30.27	6965.13
2006/11/16	00:30:00	1215.9	920.0	258.2	286.5	245.5	240.1	532.7	1508.1	243.0	238.4	214.9	236.7	65.2	62.6	65.7	63.1	230.20	30.31	6977.36
2006/11/16	00:31:00	1215.2	921.6	258.2	286.0	245.5	239.7	533.4	1531.7	242.7	238.6	214.7	236.7	65.4	62.6	65.6	63.5	230.10	30.29	6969.73
2006/11/16	00:32:00	1215.9	921.8	258.0	286.7	245.2	239.8	532.6	1508.0	243.0	238.7	214.7	236.7	64.8	63.9	65.7	63.4	230.20	30.32	6979.66
2006/11/16	00:33:00	1216.3	923.4	258.2	285.9	245.0	239.8	533.2	1522.4	243.8	238.8	214.9	236.7	64.4	62.8	65.6	64.0	230.20	30.32	6979.66
2006/11/16	00:34:00	1215.1	923.9	258.0	286.0	245.3	239.5	533.0	1507.6	243.2	238.7	215.1	236.7	65.3	62.8	65.8	63.4	230.20	30.31	6979.66
2006/11/16	00:35:00	1214.9	921.2	258.0	286.5	245.1	239.9	533.3	1519.6	242.9	238.7	215.0	236.7	65.1	63.1	65.7	63.2	230.20	30.31	6979.66
2006/11/16	00:36:00	1215.1	922.6	258.2	286.4	245.4	240.0	532.0	1517.2	242.9	238.6	215.0	236.7	65.0	63.1	65.4	63.2	230.20	30.31	6977.36
2006/11/16	00:37:00	1215.9	923.3	258.3	286.5	244.7	239.9	533.2	1523.8	242.7	238.5	214.9	236.7	64.8	62.6	65.2	62.8	229.50	30.22	6937.79
2006/11/16	00:38:00	1215.1	922.6	258.3	287.7	245.5	240.1	532.5	1515.9	243.2	238.7	215.0	236.7	65.2	62.3	65.4	63.0	230.20	30.31	6977.36
2006/11/16	00:39:00	1215.1	921.3	258.2	287.1	245.4	239.9	533.2	1524.2	242.7	238.7	214.9	236.7	65.4	62.6	65.6	63.1	230.10	30.31	6974.33
2006/11/16	00:40:00	1215.2	918.5	258.3	285.7	245.5	240.2	531.8	1502.4	243.0	238.5	214.7	236.7	65.6	63.1	65.8	63.1	230.10	30.29	6972.03
2006/11/16	00:41:00	1216.5	920.6	258.4	284.4	245.2	240.3	530.9	1536.3	243.0	238.6	214.7	236.7	64.6	62.6	65.4	63.3	230.10	30.28	6969.73
2006/11/16	00:42:00	1216.1	922.3	258.4	285.4	245.9	239.8	532.5	1523.1	243.4	238.6	214.7	236.7	65.4	62.6	65.9	63.5	229.80	30.27	6956.05
2006/11/16	00:43:00	1215.9	921.6	258.3	285.9	245.6	239.7	533.1	1520.0	242.7	238.4	214.7	236.7	65.4	62.6	65.7	63.0	230.20	30.31	6977.36
2006/11/16	00:44:00	1215.1	923.0	258.2	286.9	245.6	239.8	532.8	1514.1	242.9	238.4	214.7	236.7	65.4	62.3	65.6	63.1	230.10	30.31	6974.33
2006/11/16	00:45:00	1215.4	921.4	258.4	285.4	245.0	240.4	533.9	1524.1	243.2	238.7	214.9	236.7	64.8	63.6	65.7	63.2	229.40	30.19	6925.59
2006/11/16	00:46:00	1215.6	921.9	258.3	286.4	245.3	239.8	532.5	1488.8	243.4	238.7	214.9	236.7	65.5	63.1	65.7	63.7	230.10	30.30	6974.33
2006/11/16	00:47:00	1215.4	920.9	258.3	286.7	245.4	239.8	532.2	1481.8	242.9	238.6	214.9	236.7	65.3	62.3	65.7	63.3	230.10	30.29	6969.73
2006/11/16	00:48:00	1215.2	923.4	258.4	287.3	244.8	240.0	532.8	1437.2	242.7	238.7	214.9	236.8	65.3	63.1	65.8	63.5	230.10	30.30	6972.03
2006/11/16	00:49:00	1215.0	921.8	258.4	287.0	245.4	240.3	532.8	1467.6	242.9	238.6	215.0	236.8	65.5	62.8	65.8	63.2	229.50	30.22	6935.49
2006/11/16	00:50:00	1215.8	921.1	258.5	286.2	245.5	240.3	532.4	1459.7	242.7	238.7	214.9	236.8	65.9	62.8	65.7	62.6	229.50	30.24	6940.08
2006/11/16	00:51:00	1215.2	921.1	258.2	286.4	245.1	240.1	533.3	1447.5	242.7	238.7	215.1	236.7	65.0	64.6	65.5	62.6	229.60	30.31	6974.33
2006/11/16	00:52:00	1215.4	920.9	258.3	285.4	246.0	240.0	532.1	1433.9	243.4	238.6	215.2	236.8	65.0	62.6	65.4	63.2	229.80	30.28	6958.34
2006/11/16	00:53:00	1216.6	920.4	258.6	285.2	245.4	240.4	533.1	1450.1	243.4	238.5	215.0	236.8	65.0	63.1	65.9	63.4	229.30	30.20	6924.86
2006/11/16	00:54:00	1215.9	921.5	258.6	286.3	245.7	240.3	533.0	1461.2	243.4	238.7	215.2	236.8	65.0	63.1	65.6	63.4	229.30	30.20	6924.86
2006/11/16	00:55:00	1216.5	921.3	258.6	286.7	245.3	240.2	532.8	1430.5	243.2	238.7	215.1	236.8	64.8	62.8	65.9	63.2	229.80	30.29	6960.64
2006/11/16	00:56:00	1216.4	921.1	258.6	286.2	245.9	240.2	533.3	1436.0	243.5	238.8	215.0	236.7	65.4	63.0	65.8	63.8	229.90	30.27	6959.07
2006/11/16	00:57:00	1215.7	920.9	258.5	286.2	245.4	240.4	532.6	1384.3	242.9	238.5	215.0	236.8	65.3	62.6	65.8	63.0	229.90	30.27	6965.97
2006/11/16	00:58:00	1216.4	920.8	258.4	286.3	245.6	240.0	533.1	1350.3	243.4	238.6	215.1	236.8	65.3	62.4	65.7	63.0	229.90	30.26	6959.07
2006/11/16	00:59:00	1216.6	921.2	258.5	286.3	245.1	240.3	533.7	1304.5	242.7	238.6	215.1	236.8	65.2	62.6	65.8	62.8	229.90	30.29	6963.67
2006/11/16	01:00:00	1215.7	922.4	258.6	286.5	245.3	240.3	531.8	1311.8	243.2	238.6	215.1	236.8	65.0	63.5	65.4	62.8	229.70	30.25	6957.61
2006/11/16	01:01:00	1214.7	919.4	258.6	286.7	245.6	240.0	534.1	1298.5	242.9	238.6	215.1	236.8	65.5	62.4	65.4	63.6	230.10	30.31	6974.33
2006/11/16	01:02:00	1215.4	922.4	258.7	286.9	245.2	240.9	533.1	1433.4	243.5	238.7	215.1	236.8	64.6	63.6	65.7	62.8	229.60	30.14	6941.24
2006/11/16	01:03:00	1215.4	922.9	258.7	286.7	245.8	240.0	532.6	1287.6	243.7	239.0	215.0	236.8	64.4	62.2	65.7	63.5	229.90	30.29	6965.97
2006/11/16	01:04:00	1214.5	922.6	258.7	287.5	245.2	240.3	533.3	1265.5	243.7	238.7	215.0	236.8	65.3	62.4	66.2	63.3	229.70	30.26	6950.72
2006/11/16	01:05:00	1214.3	920.4	258.6	287.0	245.5	240.4	533.4	1279.2	243.7	238.8	215.0	236.8	64.8	62.6	65.4	63.2	229.30	30.23	6931.74
2006/11/16	01:06:00	1214.4	923.1	258.5	286.2	245.4	239.9	533.7	1239.2	243.2	238.7	215.0	236.8	64.8	62.8	65.6	62.8	229.50	30.22	6935.49
2006/11/16	01:07:00	1215.7	922.9	258.7	287.1	245.6	240.4	533.4	1329.9	243.7	238.9	215.1	236.8	65.2	62.3	65.7	63.4	229.60	30.21	6936.22
2006/11/16	01:08:00	1215.5	921.2	258.7	286.2	245.6	240.6	531.3	1295.2	243.4	238.6	215.0	236.8	65.3	63.0	66.3	63.0	229.90	30.28	6961.37
2006/11/16	01:09:00	1216.5	920.6	258.6	285.2	245.5	240.8	533.0	1247.5	243.5	238.9	215.1	236.9	64.8	64.0	65.5	62.8	229.30	30.11	6904.22
2006/11/16	01:10:00	1216.6	922.0	258.9	286.8	245.6	241.1	533.2	1215.5	243.4	239.0	215.2	236.9	64.8	62.6	65.7	63.4	229.30	30.11	6904.22
2006/11/16	01:11:00	1215.6	920.5	258.8	287.6	245.7	240.2	533.4	1184.4	243.4	238.6	215.1	236.9	65.0	62.3	65.4	63.1	230.20	30.30	6975.06
2006/11/16	01:12:00	1215.4	921.9	258.7	286.5	245.0	240.9	531.9	1120.9	243.4	238.7	215.1	236.9	65.6	62.3	66.2	63.0	229.70	30.30	6962.21
2006/11/16	01:13:00	1215.4	921.6	258.9	286.7	245.5	240.4	531.8	1124.1	243.8	238.9	215.2	236.9	64.6	62.8	65.5	63.0	229.30	30.24	6934.03
2006/11/16	01:14:00	1216.2	921.4	258.7	287.1	245.4	239.9	533.6	1120.9	243.4	238.9	215.1	236.9	65.7	62.8	65.9	63.7	229.50	30.17	6924.02
2006/11/16	01:15:00	1215.5	920.6	258.5	286.7	245.4	240.6	533.4	1093.3	243.4	238.6	215.0	237.0	65.2	64.2	65.9	62.8	229.80	30.29	6960.64
2006/11/16	01:16:00	1217.2	918.9	258.9	286.4	245.1	240.6	532.8	1139.0	243.4	238.8	215.0	237.0	64.8	63.7	65.5	62.8	229.90	30.28	6963.67

Heat Rise Test
1st Run

Date	Time	TC1	TC2	TC3	TC4	TC5	TC6	TC7	TC8	TC9	TC10	TC11	TC12	TC13	TC14	TC15	TC16	VDC	Amps	Watts
2006/11/16	01:17:00	1215.4	920.4	258.8	287.3	246.1	240.9	532.3	1234.8	243.5	238.5	215.0	237.0	64.8	62.3	65.5	63.2	230.00	30.31	6971.30
2006/11/16	01:18:00	1215.4	921.4	258.7	286.7	245.4	240.4	533.2	1255.3	243.2	238.6	215.1	237.0	64.6	62.6	65.5	63.1	230.10	30.31	6974.33
2006/11/16	01:19:00	1214.4	921.7	258.7	287.0	246.3	240.4	532.9	1254.6	243.4	238.8	215.2	237.0	65.2	62.8	65.8	62.8	230.20	30.31	6977.36
2006/11/16	01:20:00	1214.2	920.6	258.5	285.2	245.6	240.0	532.5	1270.6	243.0	238.7	215.1	237.0	65.1	62.8	65.5	62.4	230.20	30.30	6975.06
2006/11/16	01:21:00	1217.0	920.4	259.1	287.2	246.2	240.7	533.0	1297.5	243.5	239.0	215.2	237.2	65.0	63.6	65.6	63.0	229.90	30.24	6952.18
2006/11/16	01:22:00	1215.4	920.4	259.1	286.8	245.6	239.8	532.8	1301.9	243.2	239.1	215.2	237.2	65.3	63.4	65.5	62.8	229.50	30.23	6937.79
2006/11/16	01:23:00	1215.7	922.4	258.7	285.7	245.5	240.3	533.4	1146.1	243.4	238.9	215.2	237.2	65.1	63.4	65.2	62.6	230.20	30.31	6979.66
2006/11/16	01:24:00	1216.9	921.9	259.1	286.2	246.0	240.3	532.9	1189.4	243.7	239.0	215.2	237.2	65.5	63.0	65.6	63.1	229.80	30.27	6961.37
2006/11/16	01:25:00	1216.1	920.2	259.2	287.1	245.5	240.6	533.9	1113.0	243.2	238.8	215.2	237.2	65.0	63.5	66.0	63.1	230.00	30.29	6966.70
2006/11/16	01:26:00	1217.0	921.5	259.3	286.9	245.6	240.4	533.9	1249.6	243.7	239.0	215.2	237.2	65.3	63.2	65.5	63.0	229.40	30.21	6930.17
2006/11/16	01:27:00	1216.5	922.6	259.1	286.9	246.2	240.9	533.9	1230.9	243.7	239.1	215.2	237.2	65.0	63.0	65.5	63.1	230.00	30.30	6973.60
2006/11/16	01:28:00	1216.3	921.0	259.3	287.0	244.9	241.1	534.2	1262.1	243.2	239.2	215.2	237.2	65.5	62.8	66.2	63.6	230.10	30.27	6965.13
2006/11/16	01:29:00	1215.4	918.9	259.1	286.4	245.2	241.1	534.1	1181.5	243.5	238.8	215.1	237.2	65.4	62.6	65.9	63.0	229.90	30.28	6961.37
2006/11/16	01:30:00	1216.4	922.3	259.0	286.9	245.3	241.3	533.4	1190.9	243.4	238.9	215.1	237.2	65.6	62.6	65.8	63.2	229.80	30.23	6949.15
2006/11/16	01:31:00	1216.3	922.0	259.1	286.7	246.0	240.8	534.2	1180.4	243.5	239.1	215.2	237.2	65.6	63.2	66.0	63.5	230.00	30.23	6958.95
2006/11/16	01:32:00	1216.3	921.6	259.2	287.2	245.5	241.4	533.7	1185.4	243.7	238.9	215.2	237.2	65.1	63.6	65.8	63.4	230.10	30.28	6967.43
2006/11/16	01:33:00	1216.3	921.1	259.2	287.1	245.4	241.3	533.2	1190.4	243.5	239.2	215.2	237.2	65.1	63.5	65.5	63.5	229.90	30.28	6968.27
2006/11/16	01:34:00	1216.1	923.5	259.3	286.9	246.0	241.1	533.7	1127.6	243.9	239.3	215.2	237.2	65.3	62.8	65.9	63.6	229.60	30.23	6945.40
2006/11/16	01:35:00	1215.9	920.7	259.3	287.0	245.8	241.4	533.9	1202.0	243.8	239.0	215.2	237.2	65.3	62.6	66.0	63.0	229.50	30.25	6942.38
2006/11/16	01:36:00	1216.1	921.3	259.5	287.1	245.4	241.3	532.2	1202.9	243.4	239.1	215.2	237.2	64.8	63.0	65.5	63.0	230.00	30.31	6973.60
2006/11/16	01:37:00	1214.7	921.4	259.4	287.0	246.2	241.2	533.7	1163.7	244.2	239.3	215.2	237.2	64.6	63.0	65.8	63.1	229.80	30.19	6937.66
2006/11/16	01:38:00	1213.7	923.9	259.5	287.5	246.1	241.3	533.2	1112.1	243.7	239.1	215.4	237.2	65.1	63.5	65.9	63.4	230.10	30.27	6971.18
2006/11/16	01:39:00	1215.5	922.1	259.5	285.7	246.0	240.9	533.3	1143.9	243.7	239.2	215.4	237.3	64.8	63.0	65.6	63.2	229.90	30.28	6963.67
2006/11/16	01:40:00	1216.9	920.4	259.3	286.3	245.6	241.7	534.4	1164.8	243.7	239.3	215.5	237.2	65.3	63.0	65.7	63.9	229.90	30.29	6963.67
2006/11/16	01:41:00	1215.9	921.6	259.5	286.7	245.7	241.4	534.4	1155.4	244.2	239.2	215.4	237.2	65.7	62.4	65.9	63.4	230.00	30.18	6962.53
2006/11/16	01:42:00	1214.5	922.4	259.5	287.0	246.1	241.3	534.2	1132.7	245.0	239.4	215.2	237.2	65.2	63.4	65.2	64.3	229.40	30.23	6934.76
2006/11/16	01:43:00	1216.9	922.6	259.6	286.2	246.4	241.9	533.7	1191.3	244.2	239.7	215.2	237.2	64.8	64.1	66.0	64.3	230.00	30.29	6966.70
2006/11/16	01:44:00	1216.6	920.8	259.6	287.1	246.5	241.7	532.7	1190.1	244.5	239.4	215.2	237.2	65.5	63.6	66.1	64.6	230.20	30.31	6979.66
2006/11/16	01:45:00	1216.6	922.4	259.3	285.7	246.1	241.3	532.5	1164.9	244.4	239.9	215.4	237.2	64.6	63.6	65.6	64.8	230.20	30.31	6979.66
2006/11/16	01:46:00	1216.3	921.8	259.5	286.0	246.2	241.7	532.8	1146.4	244.3	239.6	215.5	237.4	66.1	63.4	66.0	64.6	230.00	30.30	6969.00
2006/11/16	01:47:00	1216.1	921.5	259.6	286.5	245.4	241.3	534.4	1146.2	244.6	239.6	215.5	237.4	65.1	63.3	65.8	63.7	229.70	30.26	6950.72
2006/11/16	01:48:00	1216.8	921.0	259.7	287.0	245.2	241.6	533.9	1089.6	244.0	239.3	215.5	237.4	65.1	63.3	66.1	63.1	229.80	30.28	6964.40
2006/11/16	01:49:00	1216.5	922.6	259.6	286.7	246.2	241.3	534.9	1098.3	244.0	239.5	215.5	237.4	64.8	62.8	65.5	63.1	229.60	30.30	6961.47
2006/11/16	01:50:00	1215.5	921.5	259.6	287.5	245.7	240.7	534.2	1099.0	243.7	239.5	215.5	237.4	65.6	62.6	66.2	63.6	230.00	30.27	6962.10
2006/11/16	01:51:00	1215.1	921.2	259.8	287.0	244.9	242.1	534.4	1104.2	244.3	239.7	215.5	237.4	65.2	63.6	66.3	63.6	229.90	30.27	6961.37
2006/11/16	01:52:00	1215.0	920.7	259.7	286.8	246.2	241.7	534.7	1108.9	244.5	239.6	215.5	237.5	65.7	64.0	66.2	63.6	229.90	30.26	6961.37
2006/11/16	01:53:00	1215.4	921.4	259.8	285.9	246.4	241.9	533.9	1117.4	244.9	239.5	215.5	237.5	65.4	63.6	65.9	63.8	229.80	30.24	6958.34
2006/11/16	01:54:00	1216.1	922.1	259.8	286.7	246.4	241.7	534.7	1115.0	244.4	239.5	215.4	237.5	64.6	63.2	65.5	64.0	229.40	30.27	6943.94
2006/11/16	01:55:00	1216.3	922.1	259.9	286.7	245.2	241.3	533.9	1114.9	243.8	239.8	215.5	237.5	65.5	63.2	65.5	63.3	230.20	30.31	6979.66
2006/11/16	01:56:00	1216.1	921.7	259.9	286.4	246.2	241.2	533.7	1099.6	244.2	239.2	215.5	237.5	65.5	63.2	65.6	62.8	230.20	30.31	6979.66
2006/11/16	01:57:00	1216.4	919.6	259.8	285.9	245.8	241.3	533.2	1138.7	243.7	239.6	215.7	237.5	64.8	63.7	65.6	63.2	230.20	30.32	6979.66
2006/11/16	01:58:00	1215.9	922.4	260.0	287.2	245.7	241.4	533.2	1129.0	244.3	239.7	215.9	237.6	64.6	63.6	65.5	63.1	230.20	30.31	6977.36
2006/11/16	01:59:00	1215.2	922.1	260.0	286.7	246.3	241.7	532.8	1131.2	243.7	239.8	215.5	237.5	65.4	62.3	65.3	63.3	230.20	30.30	6977.36
2006/11/16	02:00:00	1215.0	918.6	259.9	287.4	246.6	241.7	534.7	1129.7	243.9	239.2	215.5	237.6	65.3	63.0	65.6	62.8	230.00	30.29	6966.70
2006/11/16	02:01:00	1216.4	919.6	260.0	287.6	245.6	241.7	535.2	1067.3	245.0	239.9	215.5	237.6	65.4	64.4	65.9	63.8	230.20	30.32	6979.66
2006/11/16	02:02:00	1217.1	917.1	260.0	287.5	246.0	241.9	534.4	1032.4	244.5	239.9	215.5	237.6	65.6	63.2	65.8	63.6	230.20	30.31	6979.66
2006/11/16	02:03:00	1215.4	921.1	259.9	287.0	246.6	241.6	536.3	1003.7	244.4	239.8	215.7	237.6	65.4	62.6	66.0	63.3	230.20	30.31	6979.66
2006/11/16	02:04:00	1215.1	922.3	260.0	287.4	246.0	242.1	534.4	949.6	244.7	239.8	215.7	237.6	65.0	62.3	65.9	63.2	230.20	30.31	6977.36
2006/11/16	02:05:00	1215.8	921.4	259.9	287.6	246.1	241.6	534.4	1019.0	244.3	239.2	215.7	237.6	65.0	61.9	65.6	62.6	230.20	30.31	6979.66
2006/11/16	02:06:00	1216.1	920.7	259.7	286.8	245.3	242.2	533.7	1018.9	244.5	239.2	215.7	237.6	65.6	62.2	66.1	63.5	230.20	30.31	6979.66
2006/11/16	02:07:00	1215.9	922.9	260.1	287.1	245.2	241.7	534.7	1018.9	244.3	239.6	215.9	237.6	65.4	63.4	65.6	62.6	230.20	30.31	6977.36
2006/11/16	02:08:00	1216.1	923.0	259.5	286.9	246.9	241.3	534.7	1048.6	244.2	239.5	216.0	237.6	65.0	62.6	65.2	62.6	230.20	30.31	6977.36
2006/11/16	02:09:00	1216.1	922.3	259.8	286.7	246.0	241.4	534.8	1054.0	243.7	239.4	215.9	237.6	65.0	62.3	65.6	62.6	230.20	30.31	6979.66
2006/11/16	02:10:00	1215.5	921.4	259.8	287.7	245.7	240.7	533.4	1062.9	243.8	239.6	215.9	237.6	64.6	63.8	65.0	62.4	230.20	30.32	6979.66
2006/11/16	02:11:00	1215.6	924.2	259.9	286.9	246.4	242.1	535.8	1071.0	244.7	239.7	215.9	237.6	65.1	62.8	65.4	63.2	230.20	30.31	6979.66
2006/11/16	02:12:00	1215.7	921.8	260.1	287.3	246.4	241.6	535.4	1069.2	244.2	239.6	215.9	237.6	65.1	62.8	65.6	63.0	230.20	30.31	6977.36

Heat Rise Test
1st Run

Date	Time	TC1	TC2	TC3	TC4	TC5	TC6	TC7	TC8	TC9	TC10	TC11	TC12	TC13	TC14	TC15	TC16	VDC	Amps	Watts
2006/11/16	02:13:00	1215.1	920.1	260.1	287.8	245.5	241.4	535.2	1068.5	243.5	239.6	216.0	237.6	64.8	64.1	65.5	62.8	230.20	30.28	6973.48
2006/11/16	02:14:00	1216.1	920.2	260.2	286.3	245.9	242.1	534.7	1055.9	244.6	239.7	215.7	237.7	64.6	63.7	65.6	63.5	230.20	30.31	6979.66
2006/11/16	02:15:00	1215.4	922.6	260.0	287.0	246.1	240.9	534.7	1042.1	243.7	239.6	216.0	237.7	65.2	62.3	65.4	62.6	230.20	30.32	6979.66
2006/11/16	02:16:00	1215.1	922.1	260.1	288.0	245.8	241.7	534.7	1056.8	244.0	239.8	215.9	237.7	64.6	63.4	65.5	62.6	230.20	30.31	6979.66
2006/11/16	02:17:00	1217.3	919.0	260.1	287.5	245.9	241.9	534.8	1143.2	244.4	239.7	215.7	237.7	65.1	63.0	65.6	63.2	230.20	30.32	6979.66
2006/11/16	02:18:00	1216.2	921.2	260.1	287.0	246.4	241.7	534.9	1127.4	244.3	239.7	215.7	237.7	65.0	62.4	65.6	63.3	230.10	30.30	6972.03
2006/11/16	02:19:00	1214.5	920.6	260.0	287.7	246.3	241.7	534.7	1127.9	244.5	239.6	216.0	237.7	65.5	63.2	65.8	63.4	230.10	30.31	6976.63
2006/11/16	02:20:00	1216.1	920.0	260.0	287.3	246.3	241.9	533.6	1161.9	244.5	239.7	216.0	237.8	65.3	63.4	65.7	63.6	230.20	30.31	6977.36
2006/11/16	02:21:00	1215.7	922.9	260.1	287.1	246.0	242.2	534.5	1141.9	244.3	239.8	216.0	237.8	65.5	63.6	65.9	63.4	230.20	30.31	6977.36
2006/11/16	02:22:00	1214.7	922.3	260.2	288.5	246.6	241.9	535.8	1157.7	244.2	239.7	216.0	237.9	65.1	63.5	65.7	63.3	230.20	30.31	6977.36
2006/11/16	02:23:00	1215.5	922.4	260.1	286.0	245.6	242.2	535.0	1163.2	244.2	239.6	216.0	237.8	65.4	63.0	65.6	63.3	230.20	30.31	6977.36
2006/11/16	02:24:00	1215.1	922.1	260.1	287.3	245.9	241.7	535.2	1151.2	244.2	239.7	216.0	237.8	65.2	63.4	65.4	63.1	230.20	30.31	6977.36
2006/11/16	02:25:00	1215.4	922.0	260.2	286.5	246.4	241.6	534.7	1152.4	244.0	239.4	216.0	237.9	65.2	64.6	65.6	63.3	230.20	30.31	6977.36
2006/11/16	02:26:00	1216.1	921.4	260.2	287.6	246.4	241.7	534.9	1204.5	244.0	239.3	215.9	237.9	65.3	66.4	66.0	63.4	230.20	30.31	6977.36
2006/11/16	02:27:00	1216.2	923.1	260.3	287.1	246.4	242.5	533.9	1201.1	244.7	239.6	216.0	237.9	65.0	64.8	66.1	64.1	230.00	30.31	6971.30
2006/11/16	02:28:00	1215.9	919.9	260.2	286.9	246.8	242.2	533.9	1185.1	244.5	240.0	216.0	238.0	65.4	63.7	66.0	63.7	230.20	30.31	6977.36
2006/11/16	02:29:00	1215.1	920.8	260.2	287.6	246.6	242.4	533.9	1174.5	244.0	239.9	216.0	238.0	65.4	62.8	66.0	63.4	230.20	30.31	6979.66
2006/11/16	02:30:00	1214.3	920.8	260.1	287.2	246.9	242.1	535.2	1172.9	244.2	239.8	216.0	238.0	65.7	62.8	65.7	63.7	230.20	30.31	6979.66
2006/11/16	02:31:00	1215.6	922.7	260.4	287.2	246.3	241.9	534.7	1178.8	244.0	240.0	216.0	238.0	65.0	64.0	65.4	63.7	230.20	30.31	6977.36
2006/11/16	02:32:00	1215.4	922.1	260.4	287.2	246.5	242.4	535.2	1140.3	244.8	240.1	216.0	238.0	66.1	63.7	66.3	63.9	230.20	30.31	6977.36
2006/11/16	02:33:00	1215.2	921.3	260.4	288.0	246.3	241.4	534.7	1184.5	244.4	239.9	216.0	238.0	65.6	64.0	65.7	63.3	230.20	30.31	6979.66
2006/11/16	02:34:00	1215.6	922.4	260.4	288.0	246.8	242.1	534.7	1207.6	244.5	240.0	216.2	238.0	65.6	64.2	65.9	63.3	230.20	30.31	6977.36
2006/11/16	02:35:00	1215.8	921.8	260.4	287.7	246.4	242.1	534.4	1247.7	244.7	240.0	216.2	238.0	65.3	63.3	65.6	63.7	230.20	30.31	6979.66
2006/11/16	02:36:00	1215.6	919.3	260.3	287.7	247.1	241.9	534.2	1242.8	244.9	240.0	216.0	238.0	65.7	62.8	65.6	63.6	230.00	30.28	6964.40
2006/11/16	02:37:00	1216.1	920.8	260.6	287.8	246.9	241.7	535.0	1238.5	244.8	239.9	216.0	238.0	66.0	63.0	66.4	63.9	230.20	30.31	6979.66
2006/11/16	02:38:00	1216.6	922.4	260.6	286.8	246.3	242.4	534.7	1238.8	244.7	240.0	216.0	238.0	65.5	63.1	65.9	63.8	230.20	30.31	6979.66
2006/11/16	02:39:00	1215.4	922.3	260.5	287.7	246.2	242.5	535.0	1234.1	244.4	240.1	216.2	238.0	65.6	63.3	66.2	63.4	230.20	30.31	6977.36
2006/11/16	02:40:00	1214.8	922.9	260.7	288.5	245.9	242.4	535.5	1225.6	245.0	240.3	216.2	238.1	65.4	64.3	66.0	63.7	230.20	30.31	6977.36
2006/11/16	02:41:00	1215.9	923.4	260.6	287.0	246.3	242.4	535.2	1237.2	244.8	239.9	216.2	238.1	65.1	63.3	65.9	63.4	230.20	30.31	6979.66
2006/11/16	02:42:00	1215.6	919.9	260.6	287.8	246.6	242.1	535.2	1280.6	244.3	239.9	216.0	238.1	65.6	63.3	66.0	63.4	230.20	30.31	6979.66
2006/11/16	02:43:00	1215.6	923.0	260.6	287.2	246.9	242.4	533.1	1260.5	244.6	239.9	216.2	238.1	65.6	63.0	66.0	63.6	230.20	30.31	6977.36
2006/11/16	02:44:00	1216.1	919.7	260.7	287.5	246.5	242.5	534.8	1389.1	244.3	240.0	216.2	238.1	65.2	63.3	65.7	63.3	230.20	30.31	6977.36
2006/11/16	02:45:00	1216.2	924.4	260.7	288.2	246.6	242.2	535.6	1274.6	244.2	240.1	216.0	238.1	65.5	62.8	66.0	63.2	230.10	30.30	6972.03
2006/11/16	02:46:00	1216.8	923.3	260.6	287.4	246.8	242.4	533.9	1293.6	244.5	240.1	216.2	238.2	65.2	64.1	65.6	63.2	230.20	30.31	6977.36
2006/11/16	02:47:00	1216.3	921.9	260.7	286.5	246.9	242.7	534.1	1384.0	245.3	240.2	216.2	238.2	65.6	63.4	66.3	63.7	230.20	30.31	6979.66
2006/11/16	02:48:00	1216.3	920.5	260.6	288.0	246.5	242.7	535.4	1383.5	244.2	239.8	216.2	238.2	65.0	63.4	65.6	63.4	230.20	30.31	6979.66
2006/11/16	02:49:00	1215.9	920.1	260.7	287.4	246.0	242.2	533.6	1366.1	244.7	240.2	216.2	238.2	65.3	64.1	65.7	63.8	230.20	30.31	6977.36
2006/11/16	02:50:00	1216.8	919.6	260.7	288.2	247.0	242.4	534.2	1378.5	244.7	240.2	216.2	238.2	65.5	63.1	65.8	63.8	230.20	30.31	6979.66
2006/11/16	02:51:00	1215.9	921.5	260.6	286.7	246.6	242.4	535.9	1369.3	244.8	240.1	216.4	238.2	65.7	63.6	66.2	63.7	230.10	30.32	6976.63
2006/11/16	02:52:00	1216.2	923.4	260.7	287.6	246.6	242.4	535.9	1369.3	244.8	239.8	216.0	238.2	65.3	62.8	65.7	63.7	230.20	30.31	6977.36
2006/11/16	02:53:00	1215.9	920.4	260.8	287.8	246.8	242.4	535.2	1375.9	244.5	240.1	216.2	238.2	65.7	63.0	65.9	63.6	230.20	30.31	6977.36
2006/11/16	02:54:00	1216.3	921.2	260.7	287.9	247.0	242.7	534.8	1383.2	244.4	239.8	216.2	238.2	65.6	63.2	66.1	63.4	230.20	30.31	6977.36
2006/11/16	02:55:00	1215.8	922.3	260.8	287.6	246.7	242.7	533.7	1380.5	244.2	240.0	216.2	238.2	65.6	63.4	65.8	63.5	230.30	30.31	6980.39
2006/11/16	02:56:00	1216.4	921.6	260.8	288.2	247.4	242.9	536.7	1376.4	245.0	240.1	216.2	238.2	65.7	63.6	66.3	63.4	230.20	30.31	6977.36
2006/11/16	02:57:00	1215.8	921.9	260.9	287.5	247.0	242.2	534.7	1394.5	244.5	239.9	216.2	238.2	65.6	63.3	65.7	63.1	230.20	30.31	6979.66
2006/11/16	02:58:00	1215.8	920.0	260.8	287.9	246.8	242.7	533.1	1385.7	244.5	240.0	216.2	238.2	65.4	64.1	65.5	63.3	230.20	30.32	6979.66
2006/11/16	02:59:00	1215.8	923.6	260.7	287.8	246.9	242.9	535.5	1389.2	244.5	239.5	216.4	238.3	65.7	62.6	65.7	63.3	230.20	30.31	6977.36
2006/11/16	03:00:00	1215.9	920.4	260.9	287.7	246.3	242.7	534.4	1398.7	244.0	240.1	216.4	238.2	65.5	62.6	65.9	63.5	230.10	30.30	6972.03
2006/11/16	03:01:00	1216.1	920.9	260.9	288.1	246.5	242.9	535.2	1387.7	244.9	240.1	216.4	238.3	65.7	64.0	65.9	63.8	230.20	30.31	6977.36
2006/11/16	03:02:00	1214.7	923.2	260.9	287.8	246.7	242.9	535.0	1415.9	244.2	240.1	216.5	238.4	65.8	63.4	65.9	63.5	230.10	30.31	6976.63
2006/11/16	03:03:00	1215.4	918.4	260.9	288.0	246.3	242.5	533.2	1426.6	244.5	240.0	216.5	238.4	64.8	63.4	65.8	63.4	230.20	30.31	6979.66
2006/11/16	03:04:00	1215.6	920.4	260.9	287.2	246.8	242.7	534.7	1420.2	245.0	240.2	216.5	238.4	66.0	63.5	66.4	64.0	230.20	30.31	6977.36
2006/11/16	03:05:00	1216.1	923.8	260.8	286.8	246.8	242.7	534.4	1425.0	245.0	240.2	216.5	238.4	65.4	63.3	66.2	63.5	230.20	30.30	6975.06
2006/11/16	03:06:00	1215.1	922.9	261.2	286.8	247.1	242.9	534.9	1439.7	245.1	240.2	216.5	238.4	65.7	62.8	65.9	63.8	230.20	30.31	6977.36
2006/11/16	03:07:00	1214.4	922.6	260.8	287.4	247.1	242.9	533.4	1438.9	244.9	240.1	216.7	238.4	65.7	62.8	65.8	63.6	230.20	30.31	6977.36
2006/11/16	03:08:00	1215.2	920.5	260.8	287.1	246.5	242.9	534.7	1436.2	245.1	240.0	216.5	238.4	65.7	63.2	65.9	63.9	230.20	30.31	6977.36

Heat Rise Test
1st Run

Date	Time	TC1	TC2	TC3	TC4	TC5	TC6	TC7	TC8	TC9	TC10	TC11	TC12	TC13	TC14	TC15	TC16	VDC	Amps	Watts
2006/11/16	03:09:00	1215.6	921.4	261.1	288.5	246.9	242.1	534.8	1436.7	245.1	240.2	216.5	238.4	65.8	63.1	66.0	63.7	230.20	30.31	6977.36
2006/11/16	03:10:00	1215.6	922.0	261.1	288.2	246.8	242.7	535.7	1432.8	245.1	240.2	216.4	238.4	65.9	62.8	66.3	63.8	230.20	30.31	6977.36
2006/11/16	03:11:00	1215.1	922.6	260.9	288.1	247.2	241.9	535.6	1415.0	244.8	240.1	216.5	238.4	65.5	62.6	65.7	63.7	230.10	30.31	6974.33
2006/11/16	03:12:00	1215.1	924.0	261.3	287.5	246.4	242.9	534.4	1383.7	244.5	240.3	216.5	238.4	65.7	62.6	66.6	63.8	230.20	30.31	6977.36
2006/11/16	03:13:00	1215.2	922.1	261.3	287.5	246.9	242.9	536.1	1396.6	245.5	240.3	216.4	238.4	65.1	64.1	65.9	63.9	230.20	30.31	6977.36
2006/11/16	03:14:00	1216.1	919.7	261.2	288.1	247.0	243.2	535.7	1405.3	245.6	240.4	216.4	238.4	65.3	62.8	66.1	64.2	230.20	30.31	6977.36
2006/11/16	03:15:00	1215.5	922.7	261.1	288.6	246.4	243.2	535.6	1401.7	245.2	240.4	216.5	238.4	65.5	63.4	66.3	63.8	230.20	30.31	6977.36
2006/11/16	03:16:00	1215.4	922.9	261.1	287.8	247.2	242.5	536.5	1382.7	245.1	240.3	216.5	238.4	65.5	63.1	66.2	63.7	230.20	30.31	6977.36
2006/11/16	03:17:00	1215.4	921.0	261.3	287.4	246.7	243.2	536.1	1391.9	245.1	240.3	216.7	238.4	65.7	63.2	65.8	63.6	230.20	30.31	6977.36
2006/11/16	03:18:00	1215.0	921.2	261.2	288.6	247.2	243.2	534.9	1405.9	244.6	240.3	216.7	238.5	65.5	62.8	65.9	63.3	230.20	30.31	6977.36
2006/11/16	03:19:00	1216.1	920.5	261.2	288.2	247.6	243.4	535.9	1375.1	245.1	240.4	216.7	238.5	65.6	62.8	65.9	63.9	230.20	30.31	6977.36
2006/11/16	03:20:00	1215.0	924.3	261.3	287.7	246.8	243.5	536.1	1352.7	244.6	240.4	216.7	238.5	65.4	64.0	65.7	63.6	230.20	30.31	6977.36
2006/11/16	03:21:00	1215.0	922.6	261.3	288.4	247.1	243.0	535.5	1346.5	244.7	240.4	216.7	238.5	65.4	63.4	65.8	63.7	230.20	30.31	6977.36
2006/11/16	03:22:00	1215.5	919.6	261.2	288.1	247.1	243.0	534.8	1356.1	245.0	240.0	216.7	238.5	65.7	62.8	66.2	63.7	230.10	30.31	6976.63
2006/11/16	03:23:00	1215.6	921.2	261.1	288.4	246.9	243.0	535.2	1340.5	245.0	240.1	216.7	238.5	65.6	63.3	65.9	63.7	230.20	30.31	6977.36
2006/11/16	03:24:00	1216.8	920.4	261.4	287.5	246.9	243.4	535.0	1338.5	245.7	240.3	216.7	238.5	65.0	64.2	66.1	63.9	230.20	30.32	6979.66
2006/11/16	03:25:00	1215.6	920.6	261.3	288.1	247.2	243.5	534.9	1284.1	245.0	240.4	216.7	238.5	65.6	63.8	66.3	63.4	230.20	30.31	6977.36
2006/11/16	03:26:00	1215.8	922.9	261.3	287.6	246.9	242.9	536.8	1254.6	244.7	240.6	216.7	238.6	65.5	63.4	66.2	63.2	230.20	30.31	6977.36
2006/11/16	03:27:00	1214.8	922.4	261.2	287.6	247.1	243.2	535.2	1203.6	245.3	240.3	216.7	238.6	65.6	63.1	66.0	63.8	230.20	30.30	6975.06
2006/11/16	03:28:00	1215.8	920.8	261.4	287.4	246.5	243.2	535.8	1208.9	244.5	240.4	217.0	238.6	65.6	63.0	66.0	63.7	230.10	30.29	6969.73
2006/11/16	03:29:00	1215.8	920.8	261.4	286.8	246.9	243.4	534.4	1200.2	245.4	240.3	216.9	238.6	65.5	63.6	65.9	63.8	230.20	30.31	6977.36
2006/11/16	03:30:00	1216.3	919.6	261.3	288.1	247.1	243.4	533.2	1297.6	245.3	240.3	216.7	238.7	65.5	63.1	65.7	63.9	230.20	30.31	6977.36
2006/11/16	03:31:00	1215.8	922.3	261.4	288.3	246.6	242.9	536.3	1253.1	244.6	240.4	217.0	238.7	65.6	63.6	66.3	63.8	230.20	30.31	6977.36
2006/11/16	03:32:00	1215.7	921.2	261.4	287.4	247.6	243.2	535.4	1285.5	244.7	240.3	217.0	238.6	65.5	63.3	66.3	63.6	230.20	30.31	6977.36
2006/11/16	03:33:00	1215.6	918.7	261.4	287.8	246.6	243.2	535.4	1282.3	245.0	240.3	216.7	238.6	65.4	63.0	66.1	63.4	230.20	30.30	6975.06
2006/11/16	03:34:00	1216.5	921.5	261.3	287.7	247.0	243.0	535.2	1284.6	244.8	240.2	216.9	238.6	65.7	63.0	66.3	63.2	230.20	30.32	6979.66
2006/11/16	03:35:00	1215.7	922.6	261.3	287.7	247.0	242.9	536.9	1287.9	244.9	240.3	217.0	238.6	65.4	63.9	65.9	63.2	230.20	30.31	6979.66
2006/11/16	03:36:00	1215.2	922.1	261.4	287.3	246.9	242.9	535.3	1287.7	245.0	240.4	216.9	238.7	65.4	63.8	66.3	63.5	230.20	30.31	6977.36
2006/11/16	03:37:00	1215.5	922.1	261.6	288.6	247.3	243.9	536.7	1295.8	245.1	240.4	216.9	238.7	65.6	62.8	66.0	63.8	230.20	30.31	6979.66
2006/11/16	03:38:00	1215.4	919.6	261.6	288.1	247.2	243.5	534.5	1308.7	245.3	240.2	217.0	238.7	65.9	63.1	66.4	63.9	230.20	30.31	6977.36
2006/11/16	03:39:00	1215.9	920.8	261.6	288.0	246.5	243.8	537.1	1310.6	245.4	240.7	217.0	238.8	65.8	62.8	66.6	64.0	230.20	30.30	6975.06
2006/11/16	03:40:00	1215.7	920.6	261.6	287.7	247.0	243.5	536.0	1314.3	245.0	240.4	217.0	238.8	65.7	63.5	66.0	63.6	230.20	30.31	6977.36
2006/11/16	03:41:00	1215.7	919.0	261.6	287.5	247.2	243.4	535.3	1294.0	245.3	240.4	217.0	238.9	65.6	63.5	66.2	64.0	230.20	30.31	6977.36
2006/11/16	03:42:00	1215.6	921.3	261.4	288.5	247.6	243.7	535.9	1304.0	244.8	240.4	217.0	238.8	65.7	63.2	66.2	63.4	230.20	30.31	6979.66
2006/11/16	03:43:00	1215.1	922.4	260.9	288.1	247.2	243.7	535.4	1317.8	245.0	240.4	216.9	238.8	65.6	63.0	65.9	63.3	230.20	30.31	6979.66
2006/11/16	03:44:00	1216.1	922.6	261.6	288.5	246.5	243.2	535.2	1318.5	245.6	240.4	216.9	238.7	65.7	63.0	65.9	63.5	230.20	30.31	6977.36
2006/11/16	03:45:00	1215.9	924.0	261.4	288.0	246.7	243.4	537.0	1299.3	244.9	240.4	217.0	238.8	65.5	64.3	66.1	63.5	230.20	30.31	6977.36
2006/11/16	03:46:00	1215.2	923.0	261.4	289.1	247.0	243.5	536.5	1313.7	245.0	240.6	217.0	238.7	65.2	63.2	66.0	63.2	230.20	30.31	6979.66
2006/11/16	03:47:00	1214.9	920.1	261.6	287.4	247.7	243.7	536.8	1305.2	245.5	240.4	216.9	238.7	65.3	63.2	66.3	63.8	230.20	30.31	6977.36
2006/11/16	03:48:00	1215.2	919.4	261.7	287.8	247.1	243.4	535.6	1324.3	245.3	240.4	216.7	238.8	65.8	63.1	65.8	63.5	230.20	30.30	6978.09
2006/11/16	03:49:00	1215.0	921.4	261.4	288.4	247.6	243.7	535.2	1343.6	244.6	240.3	216.9	238.8	65.4	63.0	65.9	63.5	230.20	30.31	6979.66
2006/11/16	03:50:00	1214.9	924.6	261.7	288.6	246.7	243.7	535.2	1307.4	244.8	240.4	217.0	238.9	64.8	64.6	66.2	63.6	230.20	30.29	6975.79
2006/11/16	03:51:00	1215.0	921.0	261.4	288.1	247.8	243.7	534.7	1333.5	244.9	240.3	216.7	238.9	65.5	63.5	65.9	63.3	230.20	30.32	6979.66
2006/11/16	03:52:00	1215.9	924.5	261.8	288.2	247.3	243.8	536.2	1332.7	245.4	240.6	216.9	238.8	65.3	63.2	66.2	63.3	230.00	30.28	6964.40
2006/11/16	03:53:00	1215.5	924.6	261.8	288.4	247.7	243.5	536.2	1288.3	245.4	240.3	216.7	238.8	65.3	63.6	66.0	63.2	230.20	30.31	6979.66
2006/11/16	03:54:00	1215.2	920.4	261.4	287.6	247.2	244.2	536.1	1324.9	245.2	240.7	216.7	238.8	66.0	63.7	66.3	63.5	230.10	30.31	6974.33
2006/11/16	03:55:00	1216.4	918.4	261.6	287.8	247.4	243.8	536.0	1273.8	245.3	240.2	216.9	238.8	65.3	63.6	65.7	63.4	230.20	30.31	6977.36
2006/11/16	03:56:00	1215.1	921.5	261.7	288.5	246.9	243.7	536.7	1242.5	245.1	240.4	217.0	238.8	65.6	63.4	65.8	63.4	230.20	30.31	6977.36
2006/11/16	03:57:00	1215.1	924.4	261.7	288.4	247.0	243.9	537.3	1238.5	244.9	240.6	217.0	238.8	65.6	64.0	66.0	63.3	230.20	30.31	6979.66
2006/11/16	03:58:00	1215.0	923.5	261.7	288.3	247.2	243.7	534.4	1044.0	245.4	240.4	217.0	238.8	65.6	62.8	65.8	63.5	230.20	30.31	6977.36
2006/11/16	03:59:00	1214.4	921.5	261.7	288.1	247.1	243.8	535.6	1043.4	244.8	240.6	217.0	238.9	65.6	62.8	66.0	63.4	230.20	30.31	6977.36
2006/11/16	04:00:00	1215.4	923.9	261.6	288.2	246.7	243.7	536.3	1011.8	245.2	240.4	217.0	238.9	65.4	63.3	65.8	63.8	230.20	30.31	6977.36
2006/11/16	04:01:00	1215.6	920.9	261.4	288.4	247.4	243.7	536.6	1020.2	245.1	240.2	217.0	239.0	65.3	63.4	65.8	63.3	230.20	30.31	6979.66
2006/11/16	04:02:00	1215.6	920.8	261.7	287.8	246.8	244.0	535.7	707.3	245.1	240.7	217.0	239.0	65.4	63.6	66.2	63.5	230.20	30.31	6979.66
2006/11/16	04:03:00	1215.9	921.9	261.9	288.0	246.8	243.8	536.2	687.3	245.4	240.6	217.0	239.0	65.6	63.7	65.9	63.8	230.20	30.31	6977.36
2006/11/16	04:04:00	1216.6	922.3	261.8	287.8	246.6	244.0	535.8	701.5	245.4	240.7	217.0	239.0	65.9	63.2	66.3	63.7	230.20	30.31	6979.66

Heat Rise Test
1st Run

Date	Time	TC1	TC2	TC3	TC4	TC5	TC6	TC7	TC8	TC9	TC10	TC11	TC12	TC13	TC14	TC15	TC16	VDC	Amps	Watts
2006/11/16	04:05:00	1217.3	921.3	261.9	287.4	247.6	244.2	538.1	746.3	245.3	240.9	217.0	239.0	65.8	63.2	66.0	63.5	230.20	30.30	6977.36
2006/11/16	04:06:00	1215.6	922.4	261.6	288.7	247.0	243.7	535.0	717.5	245.3	240.3	217.0	239.0	65.5	62.4	66.1	63.5	230.20	30.31	6977.36
2006/11/16	04:07:00	1215.1	922.1	261.9	289.3	247.3	243.9	535.3	735.8	245.7	240.8	217.0	239.0	65.8	62.6	66.4	63.9	230.20	30.31	6979.66
2006/11/16	04:08:00	1213.8	920.6	261.9	289.0	247.6	244.3	536.3	755.3	246.1	240.7	217.0	239.1	65.4	63.5	65.8	63.7	230.20	30.32	6979.66
2006/11/16	04:09:00	1214.4	918.7	261.9	288.4	247.3	243.5	535.7	728.9	245.6	240.9	217.0	239.1	65.2	63.6	66.1	63.5	230.10	30.31	6974.33
2006/11/16	04:10:00	1215.5	922.6	261.9	288.1	246.8	243.5	535.3	705.2	245.1	240.7	217.0	239.1	65.3	63.3	65.8	63.5	230.20	30.31	6977.36
2006/11/16	04:11:00	1214.4	922.4	261.8	288.8	247.3	243.5	536.4	825.9	244.9	240.6	217.0	239.0	65.8	62.8	66.0	63.4	230.20	30.31	6977.36
2006/11/16	04:12:00	1214.6	923.8	261.8	289.1	247.5	244.0	536.5	809.2	245.1	240.4	217.0	239.1	65.9	62.6	66.1	63.7	230.20	30.31	6977.36
2006/11/16	04:13:00	1214.5	921.5	261.9	288.7	247.8	243.7	536.2	834.3	245.3	240.4	217.0	239.1	65.5	63.0	65.8	63.5	230.20	30.31	6977.36
2006/11/16	04:14:00	1216.3	923.5	262.1	288.5	247.6	243.7	537.0	719.1	245.6	240.9	217.2	239.1	65.5	63.0	65.9	63.8	230.20	30.31	6979.66
2006/11/16	04:15:00	1215.9	922.9	262.1	287.9	246.9	244.3	537.0	867.2	245.2	240.9	217.2	239.1	65.7	63.7	65.9	63.2	230.20	30.31	6977.36
2006/11/16	04:16:00	1216.8	923.3	261.9	288.7	247.7	244.2	538.2	880.9	245.3	240.7	217.0	239.1	65.8	63.1	66.2	63.2	230.20	30.31	6977.36
2006/11/16	04:17:00	1217.2	918.9	262.2	288.0	247.5	244.3	537.2	954.8	245.3	240.9	217.0	239.2	65.2	64.1	66.1	63.2	230.20	30.31	6977.36
2006/11/16	04:18:00	1217.3	921.8	262.2	288.5	247.9	244.3	537.7	963.8	245.3	240.8	217.0	239.1	65.3	63.5	66.0	63.1	230.20	30.31	6977.36
2006/11/16	04:19:00	1216.6	921.3	262.1	287.5	248.2	244.3	536.4	963.5	245.3	240.6	217.0	239.1	65.1	63.3	65.7	63.0	230.20	30.31	6977.36
2006/11/16	04:20:00	1216.9	921.1	262.1	287.4	247.6	244.0	537.7	956.8	245.5	240.4	217.2	239.1	65.7	62.8	66.1	63.3	230.20	30.31	6977.36
2006/11/16	04:21:00	1216.3	922.0	261.8	287.6	247.1	243.9	538.1	956.8	245.0	240.6	217.3	239.2	65.5	63.2	65.8	63.2	230.20	30.31	6977.36
2006/11/16	04:22:00	1215.4	924.1	262.2	288.9	248.1	244.3	535.8	954.3	245.5	240.8	217.0	239.2	65.4	63.6	66.1	63.6	230.20	30.31	6979.66
2006/11/16	04:23:00	1215.4	922.4	262.2	287.6	247.9	244.3	537.7	955.2	245.3	240.9	217.2	239.2	65.5	63.6	66.2	63.5	230.20	30.31	6977.36
2006/11/16	04:24:00	1215.7	922.1	262.2	288.2	247.5	244.2	536.9	956.1	245.7	240.9	217.2	239.2	65.3	63.2	66.0	63.2	230.20	30.31	6977.36
2006/11/16	04:25:00	1215.9	922.0	262.1	288.2	247.7	244.2	536.7	965.7	245.8	241.1	217.2	239.3	65.7	63.0	66.1	63.5	230.20	30.31	6977.36
2006/11/16	04:26:00	1216.2	921.0	262.2	287.7	247.4	244.3	536.7	959.9	245.6	240.4	217.0	239.3	65.6	63.8	66.0	63.9	230.20	30.31	6979.66
2006/11/16	04:27:00	1215.4	923.1	262.2	287.9	247.9	244.6	537.6	951.0	245.8	241.3	217.2	239.3	65.8	66.0	65.9	63.8	230.20	30.31	6977.36
2006/11/16	04:28:00	1214.9	922.1	262.4	289.1	247.8	244.2	537.9	947.2	245.8	241.2	217.3	239.3	65.3	64.6	66.1	63.7	230.20	30.30	6975.06
2006/11/16	04:29:00	1215.2	921.2	262.4	288.9	247.6	244.4	537.7	949.1	245.4	240.9	217.2	239.4	65.7	63.8	66.1	63.7	230.20	30.31	6977.36
2006/11/16	04:30:00	1215.4	922.9	262.4	289.3	247.8	244.3	538.2	945.7	245.4	240.9	217.2	239.3	65.3	63.6	66.4	63.6	230.20	30.31	6977.36
2006/11/16	04:31:00	1215.7	923.6	262.2	288.3	247.9	244.6	537.7	943.2	245.3	240.8	217.2	239.3	65.3	64.8	66.2	63.6	230.20	30.31	6979.66
2006/11/16	04:32:00	1215.0	921.2	262.1	289.3	247.2	244.3	538.1	938.8	245.5	240.9	217.2	239.4	65.7	64.4	66.0	63.5	230.20	30.31	6979.66
2006/11/16	04:33:00	1215.8	922.3	262.4	289.4	247.4	244.6	537.4	952.6	245.4	240.9	217.5	239.4	66.0	63.9	66.8	63.9	230.20	30.31	6977.36
2006/11/16	04:34:00	1216.1	918.6	262.2	288.3	247.2	244.7	536.4	1003.4	245.4	240.9	217.5	239.4	65.9	63.9	66.6	63.4	230.20	30.31	6979.66
2006/11/16	04:35:00	1216.6	919.4	262.4	287.8	247.1	244.4	535.9	1007.6	245.8	240.9	217.3	239.4	65.6	65.2	66.4	63.7	230.20	30.31	6979.66
2006/11/16	04:36:00	1217.1	919.4	262.4	289.0	248.2	244.4	536.9	997.5	246.0	240.9	217.5	239.4	65.4	63.3	66.2	63.6	230.20	30.31	6979.66
2006/11/16	04:37:00	1216.2	922.4	262.4	287.6	247.9	244.6	535.9	985.8	245.3	241.1	217.7	239.4	65.9	64.6	66.2	63.5	230.20	30.31	6979.66
2006/11/16	04:38:00	1215.2	921.2	262.4	289.0	247.4	245.0	537.7	986.8	245.9	241.2	217.5	239.4	64.8	64.1	66.1	64.2	230.20	30.32	6979.66
2006/11/16	04:39:00	1215.0	922.0	262.2	288.7	247.4	244.3	535.3	973.8	245.5	240.6	217.5	239.4	66.4	64.6	66.3	64.0	230.20	30.31	6979.66
2006/11/16	04:40:00	1216.6	918.2	262.4	288.3	247.7	244.7	535.6	978.7	245.6	240.9	217.7	239.4	65.7	64.8	66.2	63.6	230.20	30.31	6977.36
2006/11/16	04:41:00	1216.6	917.8	262.4	287.8	247.5	244.4	536.7	1004.0	245.5	240.9	217.3	239.4	65.6	64.2	66.2	63.7	230.20	30.31	6979.66
2006/11/16	04:42:00	1216.2	917.8	262.4	288.9	247.7	244.5	536.6	1013.0	245.1	240.9	217.5	239.4	65.4	63.3	66.0	63.5	230.20	30.31	6977.36
2006/11/16	04:43:00	1215.8	920.2	262.4	288.9	247.2	244.5	537.1	1017.8	245.8	240.9	217.5	239.4	65.7	63.6	66.2	63.4	230.20	30.31	6977.36
2006/11/16	04:44:00	1215.6	921.6	262.4	288.7	247.9	244.6	536.9	949.9	245.7	240.9	217.7	239.5	65.6	64.0	66.4	63.5	230.20	30.31	6979.66
2006/11/16	04:45:00	1215.7	921.8	262.4	288.2	247.1	244.5	537.2	958.3	245.5	240.9	217.5	239.5	65.6	63.6	66.1	63.2	230.20	30.31	6979.66
2006/11/16	04:46:00	1215.6	924.0	262.6	288.7	246.6	244.2	538.4	1002.8	246.0	240.8	217.7	239.5	65.7	63.2	66.3	63.8	230.20	30.31	6977.36
2006/11/16	04:47:00	1215.6	920.2	262.4	288.8	247.9	244.0	538.2	997.1	245.5	240.9	217.5	239.5	65.3	63.6	66.2	63.8	230.20	30.31	6977.36
2006/11/16	04:48:00	1215.2	920.7	262.4	287.9	247.9	244.6	536.2	978.1	245.6	240.9	217.5	239.5	66.0	63.9	66.6	63.8	230.20	30.31	6977.36
2006/11/16	04:49:00	1215.2	922.4	262.6	289.3	248.1	244.5	536.5	936.9	245.3	240.4	217.3	239.5	65.6	63.9	66.3	63.6	230.20	30.31	6977.36
2006/11/16	04:50:00	1215.4	921.2	262.4	288.1	247.9	244.4	537.0	927.4	245.4	240.8	217.5	239.5	65.3	63.4	66.0	63.2	230.20	30.31	6977.36
2006/11/16	04:51:00	1215.5	924.1	262.6	288.6	247.6	244.5	537.0	953.6	245.6	240.9	217.5	239.5	65.7	62.6	65.9	63.2	230.20	30.31	6979.66
2006/11/16	04:52:00	1214.9	923.2	262.7	289.3	248.4	245.0	536.4	922.3	245.5	240.9	217.5	239.6	65.5	63.8	66.4	63.3	230.20	30.31	6979.66
2006/11/16	04:53:00	1214.4	922.1	262.7	288.9	247.6	245.2	536.4	913.7	245.8	241.2	217.5	239.5	65.5	65.2	66.3	64.0	230.20	30.31	6977.36
2006/11/16	04:54:00	1214.5	924.6	262.2	288.7	247.9	244.6	537.0	922.1	245.8	241.1	217.5	239.5	65.9	63.7	65.9	64.1	230.20	30.30	6975.06
2006/11/16	04:55:00	1216.4	920.4	262.2	288.7	247.6	244.6	537.2	647.6	245.6	240.7	217.3	239.6	65.4	63.9	66.2	63.7	230.20	30.31	6979.66
2006/11/16	04:56:00	1215.7	917.9	262.7	288.9	247.5	245.0	536.9	526.2	245.7	241.1	217.5	239.6	65.9	66.6	66.6	63.9	230.20	30.31	6977.36
2006/11/16	04:57:00	1215.7	920.9	262.7	288.3	247.6	245.1	537.2	544.3	245.6	241.3	217.7	239.6	66.0	64.6	66.3	63.6	230.20	30.31	6977.36
2006/11/16	04:58:00	1215.1	921.7	262.7	288.4	247.1	245.1	536.8	548.3	246.3	241.3	217.7	239.7	66.0	65.9	66.2	63.9	230.20	30.31	6977.36
2006/11/16	04:59:00	1215.4	921.2	262.6	288.5	247.6	244.8	535.9	812.7	246.4	241.4	217.7	239.7	66.0	64.8	64.6	64.4	230.20	30.32	6979.66
2006/11/16	05:00:00	1215.8	920.9	262.9	287.4	247.3	244.9	535.9	791.7	245.9	241.3	217.8	239.6	66.0	65.6	66.2	63.5	230.20	30.31	6977.36

Heat Rise Test
1st Run

Date	Time	TC1	TC2	TC3	TC4	TC5	TC6	TC7	TC8	TC9	TC10	TC11	TC12	TC13	TC14	TC15	TC16	VDC	Amps	Watts
2006/11/16	05:01:00	1215.9	920.7	262.9	288.9	247.9	244.8	538.2	782.7	246.0	241.4	217.7	239.7	65.5	65.8	66.0	63.5	230.20	30.31	6977.36
2006/11/16	05:02:00	1215.9	925.3	263.0	288.7	247.6	245.2	537.4	809.0	246.1	241.4	217.7	239.7	65.6	66.6	66.2	64.0	230.20	30.31	6977.36
2006/11/16	05:03:00	1215.1	920.6	262.9	288.6	247.8	244.9	536.3	661.9	246.1	241.6	217.8	239.6	66.2	66.2	66.6	63.8	230.20	30.31	6977.36
2006/11/16	05:04:00	1215.8	919.7	262.9	288.9	247.8	244.8	537.1	891.9	246.0	241.2	217.8	239.8	66.2	65.8	66.4	63.9	230.20	30.31	6977.36
2006/11/16	05:05:00	1215.5	921.3	262.7	288.5	248.1	245.3	536.4	947.6	246.0	241.3	218.0	239.7	65.8	65.4	66.1	63.8	230.20	30.31	6977.36
2006/11/16	05:06:00	1215.1	922.7	262.7	288.8	248.1	245.3	537.3	973.6	245.9	241.4	218.0	239.7	65.8	63.7	66.1	63.7	230.20	30.31	6977.36
2006/11/16	05:07:00	1215.2	922.1	262.9	289.1	248.4	244.9	537.1	982.3	246.1	241.4	217.8	239.8	66.0	64.1	66.2	63.9	230.20	30.31	6977.36
2006/11/16	05:08:00	1215.5	919.9	262.9	289.2	247.3	245.4	538.1	917.5	245.5	241.4	218.0	239.8	65.7	64.6	66.4	63.4	230.20	30.32	6979.66
2006/11/16	05:09:00	1214.4	921.9	262.6	289.4	247.4	244.9	538.2	861.2	245.7	241.3	218.0	239.8	65.6	65.3	66.2	63.4	230.20	30.31	6979.66
2006/11/16	05:10:00	1215.1	921.1	262.9	288.3	247.9	245.3	537.9	805.2	246.1	241.4	217.8	239.8	65.8	67.2	66.4	63.9	230.20	30.31	6977.36
2006/11/16	05:11:00	1215.4	921.4	262.9	289.3	247.9	245.0	536.1	810.0	246.3	241.6	218.0	239.8	66.0	67.6	66.3	64.0	230.10	30.29	6969.73
2006/11/16	05:12:00	1215.9	920.5	263.2	289.1	247.7	245.2	536.6	828.9	246.2	241.9	218.0	239.8	65.7	65.6	66.4	63.9	230.20	30.31	6977.36
2006/11/16	05:13:00	1216.4	923.8	262.9	289.3	247.6	245.0	537.4	852.9	246.6	241.6	218.0	239.8	65.7	64.0	66.2	63.9	230.20	30.32	6979.66
2006/11/16	05:14:00	1216.3	922.1	262.9	288.9	246.9	245.5	537.7	798.4	246.8	242.1	217.8	239.9	64.8	65.8	66.0	64.2	230.20	30.31	6977.36
2006/11/16	05:15:00	1215.1	920.2	263.2	289.0	247.7	245.5	537.3	811.7	246.3	241.7	218.0	239.9	65.6	67.0	66.4	64.1	230.20	30.31	6977.36
2006/11/16	05:16:00	1216.1	919.6	263.2	288.9	247.9	245.7	536.9	954.8	246.3	241.9	218.0	239.9	65.5	65.9	66.4	64.1	230.20	30.31	6977.36
2006/11/16	05:17:00	1214.4	923.0	263.2	289.3	248.7	245.4	538.4	941.3	246.7	241.9	218.0	239.8	65.8	65.2	66.3	64.1	230.20	30.31	6977.36
2006/11/16	05:18:00	1214.8	923.2	263.2	289.4	247.5	244.9	537.0	948.0	246.3	241.9	218.0	239.8	66.2	66.4	66.2	64.3	230.20	30.30	6975.06
2006/11/16	05:19:00	1215.6	923.3	263.2	289.6	247.9	245.3	537.0	961.0	246.7	241.9	218.0	239.9	65.3	67.5	66.6	64.3	230.20	30.30	6975.06
2006/11/16	05:20:00	1216.2	920.5	263.2	288.1	247.6	245.3	537.7	951.9	246.5	241.9	217.8	239.9	65.5	65.0	66.3	64.1	230.20	30.32	6979.66
2006/11/16	05:21:00	1215.8	920.9	262.9	288.2	247.9	245.1	537.7	963.8	246.6	241.7	218.0	239.9	65.6	64.1	66.2	63.8	230.20	30.31	6977.36
2006/11/16	05:22:00	1215.1	923.9	263.0	289.8	247.7	245.5	538.7	948.5	246.1	241.6	218.0	239.9	65.7	65.5	66.3	63.7	230.20	30.31	6977.36
2006/11/16	05:23:00	1216.2	922.9	263.2	288.5	247.3	245.6	538.4	982.8	246.4	241.9	218.0	240.0	66.0	66.4	66.4	64.6	230.20	30.31	6977.36
2006/11/16	05:24:00	1215.8	924.1	263.2	289.2	247.9	245.6	538.4	940.0	246.8	241.9	218.0	239.9	65.3	65.5	66.6	64.4	230.20	30.31	6979.66
2006/11/16	05:25:00	1215.1	923.7	263.0	288.7	248.2	245.2	538.2	951.3	246.7	242.4	218.0	239.9	64.8	64.6	65.9	64.3	230.20	30.31	6977.36
2006/11/16	05:26:00	1215.5	919.0	263.2	289.9	247.8	245.2	536.9	899.0	246.5	241.9	218.2	239.9	65.3	67.0	66.4	64.0	230.20	30.31	6977.36
2006/11/16	05:27:00	1214.2	922.4	263.4	289.8	248.2	245.3	536.9	836.0	246.2	242.2	218.2	240.0	65.5	67.1	66.4	63.9	230.20	30.31	6977.36
2006/11/16	05:28:00	1214.6	920.6	263.4	289.4	247.8	245.0	537.2	830.5	246.9	241.7	218.0	239.9	65.8	64.6	66.3	63.8	230.20	30.31	6979.66
2006/11/16	05:29:00	1215.5	922.6	263.4	288.7	247.8	245.0	537.9	925.1	246.6	242.2	218.0	240.0	65.6	64.8	66.3	63.9	230.20	30.31	6977.36
2006/11/16	05:30:00	1215.7	920.2	263.2	288.4	248.2	244.9	537.0	854.2	246.8	242.1	218.0	240.0	65.6	64.1	66.2	63.8	230.20	30.31	6977.36
2006/11/16	05:31:00	1216.3	921.0	263.2	289.0	247.5	245.5	537.4	852.1	246.8	242.1	218.2	240.0	65.9	63.9	66.4	64.0	230.20	30.31	6979.66
2006/11/16	05:32:00	1216.8	923.0	263.2	288.2	247.6	245.5	537.6	906.2	246.5	242.2	218.2	240.1	65.5	64.8	66.6	63.8	230.20	30.31	6977.36
2006/11/16	05:33:00	1216.1	922.9	263.4	289.4	248.4	245.5	538.8	1067.2	246.6	242.2	218.2	240.1	66.0	65.7	66.4	63.9	230.20	30.32	6979.66
2006/11/16	05:34:00	1215.4	923.2	263.5	290.2	248.1	245.3	537.7	895.6	246.4	242.2	218.2	240.1	65.8	65.3	66.6	63.9	230.20	30.31	6977.36
2006/11/16	05:35:00	1215.5	921.1	263.4	289.8	248.4	245.2	537.3	881.1	246.3	242.1	218.2	240.1	65.5	64.8	66.1	64.0	230.20	30.31	6977.36
2006/11/16	05:36:00	1215.0	920.0	263.7	289.4	247.8	245.7	537.0	820.7	246.7	242.1	218.0	240.1	65.5	64.8	66.1	64.0	230.20	30.31	6979.66
2006/11/16	05:37:00	1216.9	920.9	263.4	289.6	248.1	245.5	538.8	909.3	246.7	242.2	218.2	240.1	65.3	64.8	66.3	64.1	230.20	30.31	6977.36
2006/11/16	05:38:00	1215.8	921.3	263.0	288.6	248.1	245.3	537.9	879.4	246.9	242.2	218.2	240.1	65.6	63.9	66.4	64.0	230.20	30.31	6977.36
2006/11/16	05:39:00	1215.9	919.9	263.0	289.9	248.3	245.4	536.9	969.5	246.7	242.2	218.2	240.1	65.8	64.3	66.4	63.7	230.20	30.31	6977.36
2006/11/16	05:40:00	1214.9	921.1	263.7	289.4	248.3	245.5	537.7	912.3	246.4	242.2	218.3	240.1	65.8	66.2	66.4	63.7	230.20	30.31	6977.36
2006/11/16	05:41:00	1215.0	922.4	263.5	289.4	247.6	245.8	538.2	893.9	246.2	242.2	218.3	240.1	65.7	66.6	66.4	63.7	230.20	30.31	6977.36
2006/11/16	05:42:00	1214.8	924.2	263.7	288.9	248.1	246.0	537.4	895.1	247.1	242.4	218.2	240.2	65.7	66.8	66.3	63.8	230.20	30.31	6977.36
2006/11/16	05:43:00	1215.9	917.9	263.7	288.6	248.1	245.2	538.9	947.6	246.6	242.2	218.2	240.2	65.8	64.4	66.6	63.9	230.20	30.31	6977.36
2006/11/16	05:44:00	1215.1	921.6	263.8	289.4	247.9	245.5	538.4	1033.8	246.4	242.4	218.5	240.3	66.2	66.3	66.4	64.1	230.10	30.30	6972.03
2006/11/16	05:45:00	1214.4	922.9	263.7	288.7	248.2	245.9	538.4	1020.7	246.8	242.4	218.5	240.3	66.4	66.0	66.3	64.1	230.20	30.31	6977.36
2006/11/16	05:46:00	1215.2	920.8	263.7	289.8	247.9	245.5	538.7	1029.0	246.7	242.2	218.5	240.2	66.1	65.2	66.3	63.8	230.20	30.31	6977.36
2006/11/16	05:47:00	1215.4	919.1	263.5	289.3	248.4	245.6	537.9	946.5	246.6	242.1	218.5	240.2	66.2	66.8	66.4	63.8	230.20	30.31	6977.36
2006/11/16	05:48:00	1215.4	921.4	263.7	290.1	248.2	245.6	539.4	853.2	246.7	241.9	218.3	240.2	66.0	65.6	66.2	64.0	230.20	30.31	6977.36
2006/11/16	05:49:00	1214.6	921.3	263.5	290.4	247.9	245.4	537.9	835.5	246.5	241.9	218.5	240.2	66.0	65.6	66.1	63.9	230.20	30.31	6979.66
2006/11/16	05:50:00	1214.7	923.4	263.7	290.2	247.8	245.6	539.9	820.2	246.5	242.2	218.5	240.3	66.0	67.6	66.6	64.1	230.20	30.31	6977.36
2006/11/16	05:51:00	1214.8	920.8	263.4	289.9	248.1	245.4	537.4	795.0	246.6	242.2	218.5	240.3	65.9	64.8	65.6	64.3	230.20	30.31	6977.36
2006/11/16	05:52:00	1213.8	924.1	263.7	289.9	248.3	246.1	537.4	797.3	246.8	242.5	218.5	240.2	66.3	64.1	65.9	63.9	230.20	30.31	6977.36
2006/11/16	05:53:00	1213.6	921.9	263.7	289.4	247.7	245.6	538.5	800.7	246.3	242.2	218.5	240.3	65.7	64.0	65.7	63.6	230.10	30.29	6969.73
2006/11/16	05:54:00	1214.5	921.8	263.4	289.4	248.1	246.0	537.7	809.0	246.8	242.2	218.7	240.3	66.0	63.9	66.1	63.8	230.20	30.31	6977.36
2006/11/16	05:55:00	1214.0	924.6	263.7	290.1	248.2	245.8	538.4	778.0	246.3	242.2	218.7	240.3	65.6	64.2	66.4	63.8	230.20	30.31	6977.36
2006/11/16	05:56:00	1213.8	922.1	263.8	289.9	248.4	245.9	538.2	763.2	246.8	241.9	218.5	240.3	65.5	63.7	66.4	63.7	230.20	30.31	6977.36

Heat Rise Test
1st Run

Date	Time	TC1	TC2	TC3	TC4	TC5	TC6	TC7	TC8	TC9	TC10	TC11	TC12	TC13	TC14	TC15	TC16	VDC	Amps	Watts
2006/11/16	05:57:00	1215.1	922.6	263.5	289.8	248.7	245.4	537.7	758.7	246.6	242.1	218.5	240.3	65.5	63.7	66.4	63.6	230.10	30.30	6972.03
2006/11/16	05:58:00	1215.1	922.4	263.7	289.9	248.2	245.7	537.7	764.5	246.7	242.1	218.5	240.3	65.5	63.6	66.0	63.6	230.20	30.31	6977.36
2006/11/16	05:59:00	1215.1	921.3	263.5	289.4	248.3	246.0	537.1	761.1	246.8	242.2	218.3	240.4	65.9	65.7	66.1	64.0	229.90	30.28	6961.37
2006/11/16	06:00:00	1214.6	920.7	263.8	290.1	248.7	245.8	538.2	746.8	246.8	242.2	218.5	240.3	65.1	64.8	65.7	63.8	229.90	30.29	6963.67
2006/11/16	06:01:00	1214.2	920.8	263.8	289.2	248.1	246.1	537.4	712.6	247.1	242.1	218.5	240.3	65.2	64.4	66.3	64.0	230.20	30.31	6977.36
2006/11/16	06:02:00	1214.7	920.6	263.9	289.6	248.6	246.0	538.7	682.4	246.8	242.2	218.5	240.3	65.8	64.6	66.4	64.0	230.20	30.31	6977.36
2006/11/16	06:03:00	1214.5	922.1	263.8	289.0	248.6	245.9	537.2	694.7	246.7	242.2	218.5	240.3	66.1	65.7	66.4	64.0	230.20	30.31	6977.36
2006/11/16	06:04:00	1216.1	923.5	263.9	289.4	247.9	246.3	538.2	717.9	247.0	242.5	218.7	240.4	65.7	65.7	66.6	64.1	229.90	30.27	6959.07
2006/11/16	06:05:00	1216.6	924.3	264.0	289.2	247.9	245.6	538.2	651.3	247.2	242.4	218.5	240.3	65.7	66.0	66.6	64.1	230.00	30.28	6964.40
2006/11/16	06:06:00	1216.1	924.8	263.7	289.3	247.3	245.9	538.9	660.5	247.2	242.7	218.5	240.4	64.6	64.1	65.5	63.8	230.20	30.31	6977.36
2006/11/16	06:07:00	1215.1	921.7	263.7	289.7	248.9	246.1	537.7	698.6	247.4	242.7	218.2	240.3	64.8	65.6	65.3	63.6	230.20	30.31	6977.36
2006/11/16	06:08:00	1215.1	922.0	263.8	289.0	249.2	245.9	538.2	681.5	247.3	243.2	218.2	240.3	64.8	64.3	66.0	65.0	230.20	30.29	6975.79
2006/11/16	06:09:00	1214.7	922.6	263.7	288.8	248.3	245.8	536.8	672.3	247.5	242.7	218.5	240.4	65.5	63.9	66.3	65.0	230.20	30.31	6977.36
2006/11/16	06:10:00	1215.4	922.4	263.8	289.2	247.8	245.8	537.6	679.3	247.4	242.7	218.5	240.4	64.8	64.4	66.8	63.8	230.20	30.31	6977.36
2006/11/16	06:11:00	1216.2	923.3	264.0	289.9	248.4	245.8	537.4	664.3	246.7	242.9	218.7	240.4	65.3	65.1	66.8	63.9	230.20	30.31	6977.36
2006/11/16	06:12:00	1215.4	919.9	264.2	289.3	248.7	246.1	539.2	666.4	247.1	242.7	218.7	240.4	65.7	66.1	66.6	64.2	230.20	30.31	6977.36
2006/11/16	06:13:00	1214.2	923.7	263.9	289.9	248.1	246.3	539.2	684.7	247.0	242.9	218.7	240.4	65.8	66.3	66.6	64.0	230.20	30.31	6977.36
2006/11/16	06:14:00	1215.4	922.1	263.9	290.2	248.6	245.7	538.4	644.2	247.4	242.7	218.7	240.6	66.0	63.7	65.9	63.8	230.10	30.29	6969.73
2006/11/16	06:15:00	1215.0	921.7	264.2	289.6	248.4	246.1	539.0	638.1	247.1	242.9	218.7	240.6	65.5	66.8	66.4	64.0	230.20	30.31	6977.36
2006/11/16	06:16:00	1216.1	919.7	263.9	289.9	249.1	246.4	536.5	638.6	247.1	242.9	218.7	240.6	65.6	64.1	66.6	64.0	230.20	30.31	6977.36
2006/11/16	06:17:00	1215.2	921.6	264.2	290.2	247.8	245.6	537.7	672.3	247.1	242.9	218.8	240.6	65.9	65.1	66.1	63.9	230.20	30.31	6977.36
2006/11/16	06:18:00	1214.7	922.9	264.2	290.1	248.6	246.1	538.9	611.0	247.2	243.0	218.8	240.6	66.0	66.8	66.4	64.2	230.20	30.31	6977.36
2006/11/16	06:19:00	1214.6	923.3	264.2	289.9	248.9	246.1	539.5	627.6	247.3	243.0	219.0	240.6	66.1	65.1	66.6	64.0	230.10	30.30	6972.03
2006/11/16	06:20:00	1215.1	922.1	264.2	289.6	248.6	245.7	539.0	671.1	247.5	242.9	218.8	240.7	65.6	64.6	66.6	64.0	230.20	30.31	6977.36
2006/11/16	06:21:00	1215.2	919.9	264.2	288.7	248.4	246.4	536.8	662.5	247.5	243.0	219.0	240.7	66.0	65.9	66.6	64.1	230.20	30.31	6977.36
2006/11/16	06:22:00	1215.6	921.1	263.8	289.4	248.4	245.8	538.7	634.9	247.2	242.9	219.0	240.7	65.7	65.4	66.4	64.0	229.40	30.21	6930.17
2006/11/16	06:23:00	1215.8	922.6	264.2	289.9	248.9	245.7	537.7	705.0	247.2	242.7	219.0	240.7	65.9	66.4	66.1	64.0	230.20	30.31	6979.66
2006/11/16	06:24:00	1215.0	923.4	264.2	290.2	248.4	246.6	537.7	715.3	247.3	243.0	219.1	240.7	65.7	65.4	66.6	64.2	230.20	30.31	6977.36
2006/11/16	06:25:00	1214.5	922.7	264.3	290.2	248.3	246.5	539.3	710.5	247.0	242.7	218.8	240.7	66.0	67.3	66.8	64.2	230.20	30.30	6975.06
2006/11/16	06:26:00	1215.1	922.1	264.3	289.4	248.6	246.5	539.0	734.8	247.2	242.7	219.0	240.8	66.0	65.9	66.8	64.1	230.20	30.31	6979.66
2006/11/16	06:27:00	1215.1	922.3	264.3	289.2	248.1	246.6	539.2	652.1	247.6	242.7	219.0	240.7	65.9	67.1	66.8	64.6	230.20	30.31	6977.36
2006/11/16	06:28:00	1215.9	922.4	264.2	289.8	248.2	245.7	538.8	716.2	247.0	243.0	219.0	240.7	65.9	65.2	66.2	63.9	230.20	30.31	6977.36
2006/11/16	06:29:00	1214.5	924.0	264.2	289.9	248.4	246.0	538.2	690.3	247.2	243.0	219.1	240.7	65.9	65.7	66.4	64.0	230.20	30.31	6977.36
2006/11/16	06:30:00	1214.8	921.6	264.4	289.4	248.1	246.7	538.8	698.3	247.5	243.0	219.0	240.7	65.5	65.7	66.6	64.1	230.20	30.31	6977.36
2006/11/16	06:31:00	1215.1	924.3	264.0	289.7	248.7	246.3	539.4	699.8	247.3	242.9	219.1	240.8	66.2	66.4	66.6	64.1	230.20	30.31	6979.66
2006/11/16	06:32:00	1216.3	923.1	264.2	289.6	248.3	245.9	537.1	700.9	247.2	242.9	219.1	240.8	65.7	64.3	66.1	64.0	229.40	30.23	6934.76
2006/11/16	06:33:00	1215.7	922.7	264.2	289.0	249.1	245.7	538.7	672.0	246.9	242.5	219.0	240.8	65.9	64.6	66.1	64.1	230.20	30.31	6977.36
2006/11/16	06:34:00	1215.2	921.6	264.2	289.2	248.7	245.7	539.0	683.6	247.1	242.7	219.0	240.7	65.6	65.2	66.0	63.9	230.00	30.30	6969.00
2006/11/16	06:35:00	1215.9	923.4	264.2	289.2	248.3	246.3	538.4	746.1	246.9	242.7	219.1	240.7	65.9	66.6	66.2	64.0	230.20	30.31	6977.36
2006/11/16	06:36:00	1216.8	923.1	264.4	289.3	248.7	246.4	538.7	682.7	247.5	243.2	219.1	240.8	65.9	66.8	66.4	64.0	230.00	30.24	6964.27
2006/11/16	06:37:00	1215.1	924.2	264.2	290.1	248.7	246.4	540.1	733.1	247.0	242.9	219.2	240.7	66.0	65.6	66.6	63.7	230.20	30.31	6977.36
2006/11/16	06:38:00	1215.1	923.4	264.5	289.6	248.1	246.2	538.2	705.0	247.4	243.2	219.0	240.8	64.8	65.2	66.4	64.1	230.20	30.31	6977.36
2006/11/16	06:39:00	1214.4	921.9	264.5	290.6	248.4	246.5	537.9	725.7	247.2	243.2	219.1	240.8	65.0	66.8	66.6	64.0	230.20	30.31	6977.36
2006/11/16	06:40:00	1214.5	920.0	264.5	290.4	248.7	246.4	539.2	728.0	246.9	242.9	219.0	240.8	65.3	65.5	66.8	64.0	230.10	30.30	6972.03
2006/11/16	06:41:00	1216.9	923.2	264.2	289.9	248.9	245.9	537.9	755.2	247.3	243.2	219.1	240.8	65.9	65.1	66.4	63.7	230.20	30.30	6975.06
2006/11/16	06:42:00	1216.9	923.2	264.5	288.8	248.7	246.9	540.1	739.1	247.9	243.0	219.1	240.8	65.5	64.8	66.6	64.6	230.10	30.31	6974.33
2006/11/16	06:43:00	1215.5	920.1	264.5	290.1	248.1	246.9	538.1	751.0	247.9	243.0	219.1	240.8	65.5	63.4	66.8	64.8	230.20	30.28	6970.46
2006/11/16	06:44:00	1215.5	920.8	264.5	290.4	248.4	246.5	537.4	752.7	247.1	242.9	219.0	240.8	66.2	64.2	66.4	64.0	230.00	30.28	6964.40
2006/11/16	06:45:00	1216.3	919.9	264.3	290.2	249.2	246.2	538.1	763.7	247.4	242.9	219.0	240.7	66.1	63.8	66.4	64.0	230.20	30.31	6977.36
2006/11/16	06:46:00	1216.3	920.2	264.2	289.1	248.9	246.2	537.6	752.4	247.1	242.9	219.0	240.7	65.9	63.2	66.3	64.2	230.20	30.31	6979.66
2006/11/16	06:47:00	1216.9	920.5	264.0	289.1	248.3	246.0	538.2	753.3	247.2	242.7	219.0	240.7	65.9	63.3	66.6	64.3	229.40	30.21	6930.17
2006/11/16	06:48:00	1214.9	919.1	264.5	289.9	249.1	246.3	538.1	728.4	247.4	242.7	219.2	240.7	65.9	63.3	66.8	64.3	230.20	30.31	6977.36
2006/11/16	06:49:00	1214.9	920.1	264.5	289.2	248.9	246.0	539.7	745.5	247.1	242.7	219.1	240.8	65.8	63.6	66.8	63.9	230.20	30.31	6979.66
2006/11/16	06:50:00	1215.0	922.4	264.5	289.8	248.9	245.5	537.1	729.1	247.4	242.4	219.0	240.7	65.9	63.6	66.6	64.1	228.90	30.13	6896.76
2006/11/16	06:51:00	1215.8	921.8	264.6	289.7	248.7	246.3	537.7	734.7	246.8	242.7	219.0	240.7	65.6	63.8	66.4	63.8	229.60	30.20	6939.24
2006/11/16	06:52:00	1215.4	922.7	264.4	288.9	248.7	246.2	538.8	737.3	247.1	242.9	219.1	240.7	65.4	64.2	66.3	63.8	230.10	30.31	6974.33

Heat Rise Test
1st Run

Date	Time	TC1	TC2	TC3	TC4	TC5	TC6	TC7	TC8	TC9	TC10	TC11	TC12	TC13	TC14	TC15	TC16	VDC	Amps	Watts
2006/11/16	06:53:00	1215.4	922.4	264.3	289.9	248.9	245.6	537.9	762.2	247.0	242.7	219.0	240.6	65.6	63.8	66.1	63.9	230.20	30.31	6977.36
2006/11/16	06:54:00	1215.9	921.9	264.7	289.7	249.2	246.3	537.9	733.6	247.1	242.5	219.1	240.7	65.6	64.0	66.2	63.7	230.20	30.31	6979.66
2006/11/16	06:55:00	1214.9	922.7	264.4	290.7	248.9	246.3	539.0	737.9	247.4	242.7	219.1	240.7	66.0	63.5	66.4	63.7	230.20	30.31	6977.36
2006/11/16	06:56:00	1214.4	921.6	264.2	289.2	248.3	246.4	539.6	748.2	247.1	242.5	219.0	240.8	65.9	65.1	66.2	63.8	230.20	30.31	6977.36
2006/11/16	06:57:00	1216.1	920.9	264.6	289.3	248.9	246.2	538.9	733.0	247.5	242.7	219.0	240.8	65.8	63.6	66.3	64.1	230.20	30.31	6977.36
2006/11/16	06:58:00	1215.1	925.1	264.4	290.2	248.2	246.4	537.7	749.3	247.2	242.7	219.0	240.8	65.6	64.0	66.4	64.0	230.10	30.30	6972.03
2006/11/16	06:59:00	1215.8	921.0	264.4	289.4	248.4	246.3	538.2	747.4	247.0	242.7	219.0	240.9	65.9	64.1	66.3	64.2	230.10	30.31	6974.33
2006/11/16	07:00:00	1215.7	920.5	264.3	288.8	249.4	245.6	540.5	753.1	247.2	242.9	219.1	240.8	65.9	63.7	66.3	63.9	229.70	30.31	6962.21
2006/11/16	07:01:00	1215.9	919.1	264.7	289.9	249.2	245.7	539.2	737.6	247.4	242.5	219.1	240.8	66.3	63.7	66.6	64.2	229.30	30.23	6931.74
2006/11/16	07:02:00	1216.4	921.2	264.7	290.1	248.2	246.3	538.2	749.4	246.9	242.5	219.0	240.8	65.7	64.1	66.1	63.6	230.20	30.31	6977.36
2006/11/16	07:03:00	1215.9	920.5	264.5	289.8	248.4	246.3	537.7	734.7	246.9	242.4	219.0	240.8	65.7	65.1	65.8	63.6	229.60	30.31	6975.25
2006/11/16	07:04:00	1215.0	921.4	264.7	289.8	248.7	246.4	539.2	692.8	247.3	243.0	219.0	240.8	65.8	63.6	66.3	63.8	230.20	30.30	6975.06
2006/11/16	07:05:00	1214.5	924.4	264.7	290.4	247.9	246.1	539.4	703.9	247.4	242.9	219.0	240.8	65.7	64.2	66.0	63.9	230.00	30.31	6977.36
2006/11/16	07:06:00	1214.5	922.9	264.6	289.9	248.7	246.1	539.2	705.3	247.0	242.7	219.0	240.8	65.7	63.3	66.0	64.0	230.00	30.17	6945.13
2006/11/16	07:07:00	1216.1	923.0	264.3	289.9	248.7	246.0	536.0	729.3	247.1	242.7	219.1	240.8	66.1	63.1	66.3	63.9	229.70	30.26	6950.72
2006/11/16	07:08:00	1215.5	922.9	264.6	289.9	248.9	245.9	538.7	688.8	247.2	242.7	219.1	240.8	65.8	64.1	66.3	64.1	230.10	30.30	6972.03
2006/11/16	07:09:00	1214.1	922.0	264.6	289.4	248.7	246.3	538.4	694.1	247.0	242.5	219.1	240.9	65.6	65.8	66.2	63.9	230.20	30.31	6977.36
2006/11/16	07:10:00	1214.2	923.1	264.6	290.2	248.4	247.0	538.9	701.3	247.0	242.9	219.2	240.8	66.0	65.0	66.3	64.6	230.10	30.26	6962.83
2006/11/16	07:11:00	1214.7	921.4	264.6	291.2	248.3	246.1	539.4	639.0	246.9	242.7	219.1	240.9	65.7	63.3	66.3	64.2	227.80	30.07	6849.95
2006/11/16	07:12:00	1215.1	922.3	264.7	289.9	249.1	246.7	538.8	621.4	247.4	242.9	219.1	240.9	66.1	63.3	66.3	64.3	230.20	30.29	6975.79
2006/11/16	07:13:00	1214.5	924.0	264.6	289.3	249.1	246.2	539.2	596.7	246.5	242.7	219.5	240.9	66.1	63.5	66.3	63.7	230.20	30.29	6975.79
2006/11/16	07:14:00	1214.1	922.0	264.6	288.9	249.1	246.4	535.8	608.6	246.5	242.7	219.1	240.9	65.1	63.5	66.0	63.4	230.20	30.31	6977.36
2006/11/16	07:15:00	1214.1	920.7	264.4	290.6	248.2	245.9	538.1	610.0	247.1	242.7	219.2	240.9	65.6	63.0	66.1	63.5	230.20	30.31	6977.36
2006/11/16	07:16:00	1214.9	920.6	264.5	289.9	248.7	246.2	539.5	609.5	246.8	242.7	219.2	240.9	65.9	63.2	66.2	63.7	230.20	30.30	6975.06
2006/11/16	07:17:00	1214.1	919.9	264.6	290.1	248.4	246.7	538.4	592.4	246.7	242.4	219.2	240.9	65.8	64.4	66.3	63.8	230.20	30.31	6977.36
2006/11/16	07:18:00	1214.4	918.9	264.6	289.9	248.7	246.5	538.9	555.2	247.0	242.7	219.3	240.9	66.1	63.3	66.4	64.2	229.90	30.31	6972.87
2006/11/16	07:19:00	1214.4	918.1	264.7	290.2	248.9	246.3	539.4	591.1	247.2	242.2	219.0	240.9	66.1	63.3	66.1	63.9	229.80	30.28	6958.34
2006/11/16	07:20:00	1215.4	921.0	264.7	289.8	248.9	246.4	539.8	579.6	246.9	242.5	219.2	240.9	65.8	64.1	66.4	63.7	230.10	30.29	6969.73
2006/11/16	07:21:00	1216.9	922.3	264.7	288.7	248.2	246.1	539.3	574.4	247.1	242.7	219.1	240.9	64.6	63.6	66.2	63.4	229.60	30.27	6961.47
2006/11/16	07:22:00	1215.6	921.7	264.7	289.7	248.9	246.4	539.0	573.9	247.4	242.4	219.2	240.9	65.1	63.3	66.2	63.7	229.70	30.23	6949.88
2006/11/16	07:23:00	1216.1	920.4	264.6	289.7	248.7	246.3	538.7	561.5	247.0	242.7	219.2	240.9	65.9	63.3	66.1	63.6	230.20	30.29	6975.06
2006/11/16	07:24:00	1216.5	920.8	264.7	288.9	248.9	246.1	538.2	576.9	246.9	242.7	219.2	240.9	65.6	63.7	65.8	63.4	229.80	30.22	6950.60
2006/11/16	07:25:00	1215.1	921.9	264.7	289.4	248.7	246.1	538.2	560.9	247.2	242.5	219.3	240.9	65.4	64.0	65.7	63.4	230.00	30.27	6966.70
2006/11/16	07:26:00	1215.1	921.7	264.6	289.6	249.4	246.6	539.5	556.0	247.0	242.7	219.2	240.9	65.5	62.8	66.0	63.5	229.40	30.20	6927.88
2006/11/16	07:27:00	1216.1	920.7	264.7	289.9	249.7	246.4	539.5	521.5	247.5	242.9	219.2	240.9	66.6	63.0	66.2	64.2	230.10	30.16	6945.85
2006/11/16	07:28:00	1215.9	922.4	264.6	290.2	248.7	246.9	538.4	535.0	247.2	242.9	219.5	241.1	66.2	64.6	66.6	64.2	229.90	30.30	6965.97
2006/11/16	07:29:00	1215.2	923.2	264.9	289.8	248.7	246.8	539.2	541.9	247.2	242.9	219.2	241.1	65.7	63.4	66.2	63.9	229.20	30.21	6924.13
2006/11/16	07:30:00	1214.6	921.5	264.6	289.9	249.1	246.6	538.8	542.4	246.7	242.7	219.3	241.1	65.7	63.2	66.2	63.7	229.00	30.22	6922.67
2006/11/16	07:31:00	1215.6	921.9	264.8	289.2	248.9	246.4	539.9	556.0	247.3	242.4	219.1	241.1	66.2	63.2	66.6	64.2	230.10	30.19	6961.81
2006/11/16	07:32:00	1215.6	920.8	264.9	289.9	248.4	246.5	539.9	563.9	247.2	242.7	219.0	241.1	66.1	64.6	66.2	64.1	229.40	30.27	6953.11
2006/11/16	07:33:00	1215.4	921.2	264.9	289.9	249.2	247.2	539.5	536.1	247.7	242.9	219.1	241.1	66.2	64.6	66.6	64.3	230.10	30.29	6969.73
2006/11/16	07:34:00	1215.4	920.5	264.6	289.8	248.7	247.1	540.1	558.5	247.6	242.5	219.3	241.1	66.4	63.7	67.0	64.3	229.90	30.28	6961.37
2006/11/16	07:35:00	1216.2	922.0	265.0	290.7	249.2	246.9	540.4	515.2	247.3	242.9	219.3	241.1	65.8	64.3	66.4	64.2	229.70	30.22	6950.72
2006/11/16	07:36:00	1216.6	918.9	264.9	290.1	248.7	246.9	540.4	496.5	247.6	242.9	219.3	241.2	65.3	64.4	66.6	64.1	230.00	30.30	6971.30
2006/11/16	07:37:00	1215.9	924.5	264.7	290.1	249.7	247.2	539.4	518.2	247.4	243.2	219.5	241.2	65.7	64.0	66.6	64.2	230.20	30.31	6977.36
2006/11/16	07:38:00	1216.8	921.7	265.0	289.7	249.7	246.3	540.0	521.3	247.4	243.2	219.6	241.2	65.7	63.9	66.2	64.2	229.90	30.27	6968.15
2006/11/16	07:39:00	1215.5	924.4	264.9	290.6	249.1	246.8	539.8	537.3	246.8	243.2	219.5	241.2	66.1	63.2	66.6	64.2	230.10	30.29	6972.76
2006/11/16	07:40:00	1215.5	920.6	264.9	289.1	249.2	247.2	539.2	525.0	247.1	243.0	219.5	241.3	66.3	63.3	66.6	64.0	230.10	30.30	6972.03
2006/11/16	07:41:00	1216.5	920.0	264.8	290.2	249.1	246.9	538.9	502.7	247.2	242.9	219.5	241.3	66.4	63.5	66.6	64.1	229.90	30.28	6961.37
2006/11/16	07:42:00	1215.5	922.1	264.8	290.1	249.2	246.5	538.9	528.9	247.0	242.7	219.2	241.2	65.6	62.8	66.0	63.8	230.20	30.30	6977.36
2006/11/16	07:43:00	1214.4	921.7	265.1	289.9	249.2	246.6	539.3	503.1	247.6	242.7	219.2	241.2	65.7	63.6	66.2	64.0	229.90	30.29	6963.67
2006/11/16	07:44:00	1215.4	921.7	265.1	288.8	249.2	247.1	539.8	513.7	247.7	243.4	219.5	241.3	65.9	63.8	66.8	64.0	230.10	30.30	6972.03
2006/11/16	07:45:00	1214.3	923.5	264.9	291.4	249.7	247.2	540.7	511.2	247.9	243.2	219.3	241.3	65.7	63.4	66.4	64.0	230.20	30.30	6975.06
2006/11/16	07:46:00	1214.3	921.0	265.2	289.9	248.9	247.4	539.4	492.4	247.7	243.4	219.3	241.4	66.0	63.8	66.6	63.9	229.00	30.14	6902.06
2006/11/16	07:47:00	1214.1	921.7	265.2	290.2	249.2	247.1	538.7	502.4	247.6	243.2	219.3	241.3	66.2	63.7	66.4	63.9	230.10	30.26	6965.85
2006/11/16	07:48:00	1214.2	919.9	264.9	290.2	249.7	247.2	539.2	477.6	247.3	243.2	219.5	241.3	66.2	63.6	66.4	63.9	230.00	30.30	6969.00

Heat Rise Test
1st Run

Date	Time	TC1	TC2	TC3	TC4	TC5	TC6	TC7	TC8	TC9	TC10	TC11	TC12	TC13	TC14	TC15	TC16	VDC	Amps	Watts
2006/11/16	07:49:00	1215.2	921.9	264.8	289.9	249.4	246.5	539.8	498.0	247.3	242.9	219.3	241.3	65.7	63.4	66.2	63.9	229.60	30.25	6945.40
2006/11/16	07:50:00	1214.4	918.7	265.0	290.7	248.7	246.8	539.2	473.2	247.8	243.0	219.5	241.3	66.3	63.4	66.6	64.4	230.00	30.28	6966.70
2006/11/16	07:51:00	1215.2	919.9	264.9	289.7	249.4	246.9	540.1	489.0	247.8	243.2	219.5	241.4	66.4	63.4	66.8	64.8	230.10	30.28	6970.46
2006/11/16	07:52:00	1216.2	922.1	264.9	290.2	249.7	246.5	540.0	505.1	247.8	243.2	219.6	241.4	66.2	63.6	66.6	64.2	229.70	30.23	6943.83
2006/11/16	07:53:00	1214.6	923.8	265.2	289.8	249.6	247.1	538.9	487.2	247.5	243.2	219.6	241.4	66.3	63.2	66.6	64.2	230.10	30.31	6974.33
2006/11/16	07:54:00	1214.4	922.6	265.1	289.9	250.0	247.3	538.9	492.0	247.9	243.2	219.5	241.4	66.3	63.5	66.4	64.4	230.20	30.31	6977.36
2006/11/16	07:55:00	1214.9	922.9	265.0	290.4	249.6	246.7	539.5	493.8	247.5	243.4	219.5	241.4	65.5	63.1	66.2	63.7	229.40	30.15	6916.41
2006/11/16	07:56:00	1214.9	922.1	265.3	289.9	249.4	247.2	540.7	494.7	247.5	243.4	219.5	241.4	66.0	63.5	66.4	63.9	230.10	30.30	6975.06
2006/11/16	07:57:00	1214.6	924.9	265.1	290.2	248.7	247.2	539.6	498.0	247.6	243.2	219.5	241.4	66.0	63.6	66.6	63.9	229.30	30.23	6934.03
2006/11/16	07:58:00	1214.5	922.3	265.1	291.0	248.9	246.9	539.0	459.9	248.1	243.4	219.6	241.4	66.3	63.6	66.6	65.1	229.90	30.29	6963.67
2006/11/16	07:59:00	1215.4	922.6	265.1	290.7	249.2	247.3	539.6	489.0	247.6	243.2	219.6	241.4	65.7	63.7	66.6	63.9	230.20	30.31	6977.36
2006/11/16	08:00:00	1215.4	922.4	265.4	289.2	249.7	247.2	538.4	460.3	247.9	243.4	219.5	241.4	65.8	63.7	66.4	63.8	229.90	30.28	6961.37
2006/11/16	08:01:00	1215.7	920.1	265.2	290.4	248.7	247.4	539.2	470.3	247.9	243.4	219.5	241.4	66.2	63.9	66.6	64.4	230.20	30.26	6968.88
2006/11/16	08:02:00	1215.1	924.2	265.1	290.4	249.2	246.8	539.5	479.4	247.7	243.2	219.3	241.3	66.1	63.4	66.8	64.3	230.10	30.30	6972.03
2006/11/16	08:03:00	1215.1	919.4	265.4	289.9	249.1	246.8	539.7	489.0	247.6	243.0	219.2	241.3	65.7	63.2	66.6	63.9	229.90	30.25	6954.47
2006/11/16	08:04:00	1214.7	921.0	265.3	289.9	249.2	247.3	540.1	468.9	247.8	243.2	219.3	241.3	65.7	63.9	66.4	63.9	229.60	30.23	6940.81
2006/11/16	08:05:00	1216.1	922.6	265.2	290.4	249.6	247.0	540.9	483.3	247.9	243.2	219.3	241.4	65.7	63.2	66.0	63.6	229.90	30.27	6966.70
2006/11/16	08:06:00	1215.9	921.6	265.1	290.7	249.4	247.3	539.3	469.4	247.6	242.9	219.3	241.4	66.1	63.4	66.3	64.0	229.40	30.23	6934.76
2006/11/16	08:07:00	1213.8	922.1	265.1	289.9	249.2	246.7	539.2	439.5	247.3	243.2	219.5	241.4	65.8	63.3	65.9	63.6	230.00	30.28	6964.40
2006/11/16	08:08:00	1213.5	924.8	265.3	291.0	249.2	246.8	539.4	480.3	247.2	243.2	219.5	241.3	65.7	63.6	65.6	63.5	230.10	30.29	6969.73
2006/11/16	08:09:00	1214.6	922.6	265.3	289.9	248.7	247.4	540.4	480.0	247.9	243.4	219.5	241.3	65.8	63.4	66.0	64.0	230.10	30.29	6972.03
2006/11/16	08:10:00	1215.2	921.8	265.4	290.1	248.2	247.3	539.4	483.0	247.8	243.0	219.6	241.3	65.9	63.2	66.2	64.0	229.50	30.22	6940.08
2006/11/16	08:11:00	1215.4	919.9	265.4	290.2	248.9	247.3	539.4	447.8	247.6	243.0	219.6	241.4	65.4	63.5	66.4	63.6	229.90	30.21	6957.36
2006/11/16	08:12:00	1215.2	922.6	265.6	290.2	248.9	246.7	539.7	457.9	247.7	243.2	219.5	241.3	65.4	63.9	65.8	63.3	230.10	30.29	6972.03
2006/11/16	08:13:00	1215.4	922.3	265.4	289.8	248.7	247.5	540.5	464.9	247.8	243.2	219.5	241.3	65.3	63.7	65.8	63.6	229.80	30.16	6930.77
2006/11/16	08:14:00	1215.8	921.6	265.4	289.6	249.7	247.4	539.3	440.9	247.5	243.2	219.5	241.3	65.7	63.4	66.1	63.6	230.10	30.26	6965.85
2006/11/16	08:15:00	1215.0	922.1	265.5	290.1	249.2	247.4	539.9	441.2	247.5	243.4	219.6	241.4	65.8	63.1	65.9	63.5	230.00	30.29	6969.73
2006/11/16	08:16:00	1214.8	922.4	265.6	290.7	249.6	247.6	539.7	469.9	247.8	243.2	219.5	241.3	65.8	62.8	66.3	63.6	229.90	30.29	6965.97
2006/11/16	08:17:00	1214.0	923.0	265.3	290.2	248.7	247.1	539.4	440.0	248.1	243.4	219.5	241.4	65.9	62.6	65.9	63.9	229.50	30.23	6937.79
2006/11/16	08:18:00	1214.7	924.3	265.6	290.9	248.9	247.3	539.3	437.5	247.7	243.4	219.6	241.4	66.2	62.4	66.1	64.0	230.00	30.28	6964.40
2006/11/16	08:19:00	1214.4	922.3	265.6	290.2	249.4	247.5	539.9	416.4	247.9	243.4	219.6	241.4	65.3	62.6	65.7	62.6	229.80	30.24	6949.15
2006/11/16	08:21:00	1214.1	920.6	265.6	291.2	249.6	247.9	540.5	427.7	248.3	243.5	219.5	241.3	65.6	63.0	65.5	63.1	230.20	30.30	6975.06
2006/11/16	08:22:00	1213.9	924.1	265.6	291.2	250.2	247.8	541.7	460.2	248.7	243.8	219.5	241.3	65.8	64.8	66.0	65.1	228.90	30.17	6905.91
2006/11/16	08:23:00	1214.6	919.7	265.6	289.9	249.9	248.2	538.5	459.7	248.4	243.4	219.5	241.3	66.0	64.8	66.1	65.1	229.00	30.19	6913.51
2006/11/16	08:24:00	1214.4	922.4	265.5	289.9	249.1	247.8	540.2	429.8	248.4	243.8	219.5	241.4	66.1	65.1	65.5	64.4	229.50	30.16	6924.74
2006/11/16	08:25:00	1214.4	923.9	265.5	289.8	249.2	247.9	539.9	437.5	248.9	243.7	219.7	241.4	65.5	65.1	66.3	64.4	230.10	30.29	6969.73
2006/11/16	08:26:00	1214.8	922.9	265.6	290.4	249.4	248.2	538.8	402.2	247.9	243.8	219.7	241.4	65.1	63.8	66.1	64.0	230.10	30.29	6969.73
2006/11/16	08:27:00	1214.4	923.4	265.7	289.8	248.3	247.6	538.2	373.2	247.9	243.8	219.6	241.4	65.6	63.0	65.9	63.6	228.60	30.08	6876.29
2006/11/16	08:28:00	1214.4	923.1	265.5	290.7	249.2	247.3	539.9	421.4	247.7	243.4	219.6	241.4	65.5	63.0	65.5	63.1	229.70	30.25	6951.45
2006/11/16	08:29:00	1214.4	921.5	265.7	290.6	249.9	247.3	541.3	408.1	248.1	243.7	219.6	241.4	65.5	62.8	66.4	63.4	229.20	30.16	6924.13
2006/11/16	08:30:00	1214.5	922.7	265.7	290.9	249.2	247.6	540.8	398.2	247.7	243.5	219.5	241.4	65.5	62.8	65.9	63.0	230.00	30.22	6950.60
2006/11/16	08:31:00	1215.2	920.4	265.5	289.2	249.4	247.1	539.0	409.6	247.6	243.4	219.6	241.4	65.6	63.0	65.8	63.2	230.20	30.29	6972.76
2006/11/16	08:32:00	1215.5	921.6	265.5	290.1	248.9	247.2	539.6	355.5	248.2	243.5	219.5	241.4	65.4	62.6	65.5	63.5	229.80	30.28	6958.34
2006/11/16	08:33:00	1216.6	920.7	265.5	290.7	248.7	247.3	539.0	378.2	247.9	243.5	219.5	241.4	65.5	63.1	65.6	63.4	229.50	30.20	6930.90
2006/11/16	08:34:00	1216.6	919.4	265.6	289.4	248.9	247.2	539.7	371.1	247.6	243.5	219.8	241.4	65.3	63.0	65.6	63.3	229.20	30.18	6917.26
2006/11/16	08:35:00	1216.3	923.9	265.5	289.3	249.2	247.1	539.5	387.7	248.4	243.7	219.7	241.4	65.3	63.3	65.6	63.5	229.90	30.27	6959.07
2006/11/16	08:36:00	1215.5	921.3	265.7	289.8	249.4	246.7	539.3	384.3	248.1	243.9	219.8	241.4	66.1	63.3	65.7	63.6	229.60	30.23	6943.83
2006/11/16	08:37:00	1216.3	920.5	265.4	290.2	248.9	246.7	540.1	390.4	247.1	243.2	219.6	241.4	65.7	63.6	65.5	63.1	229.40	30.19	6925.59
2006/11/16	08:38:00	1214.5	920.4	265.5	290.6	249.2	247.1	537.7	314.2	247.9	243.7	219.6	241.4	65.8	63.7	65.6	63.2	229.70	30.25	6948.43
2006/11/16	08:39:00	1214.1	917.8	265.5	290.7	249.4	248.2	540.7	314.2	247.9	243.7	219.7	241.6	65.6	64.2	66.4	63.4	229.60	30.26	6947.70
2006/11/16	08:40:00	1214.1	919.9	265.4	291.2	249.2	247.9	539.4	342.6	249.2	243.9	219.7	241.4	65.9	65.1	65.4	63.7	229.80	30.25	6954.47
2006/11/16	08:41:00	1215.2	921.0	265.6	290.7	250.0	247.9	540.3	328.9	249.6	244.2	219.6	241.6	65.6	64.6	65.9	64.1	230.00	30.29	6966.70
2006/11/16	08:42:00	1215.8	919.1	266.0	290.2	250.2	248.3	541.4	296.4	248.7	244.3	220.0	241.7	65.6	64.2	65.9	64.1	229.70	30.26	6950.72
2006/11/16	08:43:00	1215.4	923.3	266.0	290.7	250.4	248.2	540.8	329.3	249.4	244.3	220.3	241.7	65.4	63.7	65.5	63.6	229.60	30.25	6945.40
2006/11/16	08:44:00	1214.5	922.7	265.9	290.7	247.9	247.9	540.6	339.9	249.2	244.5	220.0	241.7	65.1	63.9	65.1	63.9	230.10	30.28	6967.43
2006/11/16	08:45:00	1214.7	921.7	265.9	290.4	250.0	248.4	540.3	319.6	249.2	244.6	220.0	241.7	65.0	64.0	65.2	64.0	230.10	30.22	6959.67

Heat Rise Test
1st Run

Date	Time	TC1	TC2	TC3	TC4	TC5	TC6	TC7	TC8	TC9	TC10	TC11	TC12	TC13	TC14	TC15	TC16	VDC	Amps	Watts
2006/11/16	08:46:00	1214.4	923.4	266.0	291.2	248.4	248.2	539.4	344.0	249.4	244.8	220.1	241.7	65.4	64.1	65.6	63.5	229.60	30.26	6947.70
2006/11/16	08:47:00	1215.4	922.1	265.9	289.9	249.6	248.1	540.5	344.3	247.9	244.2	220.0	241.7	65.5	63.4	66.1	62.3	229.90	30.21	6954.34
2006/11/16	08:48:00	1214.4	920.9	265.7	289.4	249.9	247.6	540.7	334.6	247.6	243.7	220.0	241.7	65.4	64.3	65.7	62.4	230.10	30.30	6972.03
2006/11/16	08:49:00	1215.9	923.4	265.4	289.8	249.4	247.4	540.5	334.6	247.9	244.0	220.0	241.7	65.1	63.6	65.3	62.6	229.60	30.23	6940.81
2006/11/16	08:50:00	1215.2	920.7	265.1	290.1	249.4	247.8	540.8	341.0	248.6	243.7	220.0	241.7	65.3	64.1	65.8	62.8	229.50	30.26	6944.67
2006/11/16	08:51:00	1214.3	920.9	265.4	289.9	249.2	247.3	538.8	319.9	247.7	243.7	220.0	241.7	65.3	63.9	65.7	62.8	230.10	30.29	6972.03
2006/11/16	08:52:00	1213.1	922.1	265.4	290.6	249.2	247.2	540.3	335.7	248.2	243.8	220.0	241.7	65.3	63.5	65.8	62.8	229.80	30.29	6965.24
2006/11/16	08:53:00	1213.1	921.0	265.5	290.4	249.2	246.9	541.2	331.5	248.4	243.7	220.0	241.7	65.5	63.1	65.5	63.1	230.10	30.29	6972.76
2006/11/16	08:54:00	1213.6	921.8	265.5	290.7	249.4	247.8	541.3	339.1	248.7	243.8	220.0	241.7	65.5	63.9	66.2	63.3	229.80	30.24	6958.34
2006/11/16	08:55:00	1214.4	920.9	265.8	290.6	250.2	247.8	540.2	331.4	249.2	244.2	220.0	241.7	65.9	64.1	66.8	63.8	229.20	30.17	6924.13
2006/11/16	08:56:00	1214.5	921.6	265.7	289.4	249.6	247.9	540.7	321.4	248.7	244.2	220.1	241.7	65.7	64.8	66.3	63.5	229.80	30.28	6960.64
2006/11/16	08:57:00	1213.9	925.7	265.9	291.0	249.2	247.9	541.2	311.5	248.4	244.2	220.0	241.7	65.6	65.4	66.2	63.4	230.00	30.27	6962.10
2006/11/16	08:58:00	1215.0	923.2	265.7	289.6	250.4	248.2	539.2	302.3	249.9	244.2	220.0	241.9	65.7	65.8	66.8	64.8	230.10	30.23	6958.95
2006/11/16	08:59:00	1214.7	921.5	266.1	290.9	250.5	248.3	540.9	278.1	249.2	244.6	220.2	241.9	65.9	64.8	67.2	64.0	229.40	30.21	6930.17
2006/11/16	09:00:00	1214.5	920.6	265.6	290.7	250.4	248.2	541.3	281.5	249.2	244.4	220.2	241.9	66.0	63.9	66.8	63.9	229.60	30.21	6949.99
2006/11/16	09:01:00	1213.6	923.1	265.8	291.2	250.2	247.6	540.2	288.1	248.7	244.2	220.2	241.9	65.5	63.8	66.0	62.8	229.70	30.29	6957.61
2006/11/16	09:02:00	1213.9	922.3	265.8	291.4	249.9	247.6	541.4	303.2	248.3	244.2	220.2	241.9	65.5	64.6	66.0	62.8	229.80	30.24	6951.45
2006/11/16	09:03:00	1215.2	919.4	265.5	290.7	249.9	247.4	541.1	198.2	248.7	244.2	220.2	241.9	65.4	65.4	65.7	63.0	229.90	30.29	6965.97
2006/11/16	09:04:00	1214.7	919.3	266.1	290.1	249.4	247.9	541.1	259.9	248.6	244.5	220.1	241.9	65.6	65.0	66.0	63.1	229.90	30.23	6949.88
2006/11/16	09:05:00	1214.0	919.6	266.1	291.0	249.9	248.2	540.8	282.8	249.7	244.5	220.0	241.9	65.8	64.8	66.6	64.0	230.10	30.29	6969.73
2006/11/16	09:06:00	1215.1	919.9	266.2	289.3	250.0	248.3	540.9	237.6	250.4	244.8	220.0	241.9	65.9	65.0	67.0	64.6	229.70	30.23	6948.43
2006/11/16	09:07:00	1215.1	920.4	266.0	289.4	249.7	248.1	540.0	218.8	250.2	244.7	220.3	241.9	65.7	64.8	66.6	64.6	229.30	30.17	6917.98
2006/11/16	09:08:00	1215.0	920.7	266.3	291.4	250.4	248.4	540.8	257.2	250.0	244.9	220.5	241.9	65.7	65.2	66.6	64.6	228.90	30.04	6876.16
2006/11/16	09:09:00	1214.8	919.4	266.3	290.7	250.8	248.6	541.9	263.4	250.4	244.9	220.5	241.9	65.9	65.2	66.6	65.0	229.20	30.20	6921.84
2006/11/16	09:10:00	1215.1	922.9	266.3	289.9	250.5	248.6	541.3	277.2	250.2	245.0	220.5	241.9	65.9	65.3	66.6	64.6	229.70	30.23	6948.43
2006/11/16	09:11:00	1214.7	923.9	266.2	291.2	250.8	248.7	540.7	278.1	250.2	245.3	220.5	241.9	66.2	65.6	67.0	64.8	229.60	30.23	6940.81
2006/11/16	09:12:00	1215.0	920.9	266.1	291.0	249.7	248.6	538.4	222.5	249.9	244.7	220.2	242.1	65.9	65.2	66.8	65.1	229.30	30.20	6924.86
2006/11/16	09:13:00	1214.7	921.1	266.0	291.5	249.7	248.4	541.7	273.0	250.2	245.0	220.5	242.1	65.7	65.3	65.9	65.1	229.60	30.24	6943.10
2006/11/16	09:14:00	1214.9	920.6	266.0	291.4	250.0	248.6	540.5	225.4	250.5	245.3	220.1	242.1	65.2	65.4	66.6	65.4	229.50	30.25	6942.38
2006/11/16	09:15:00	1213.6	921.3	266.1	290.4	250.4	248.4	540.7	249.2	250.2	245.5	220.3	242.1	65.1	65.5	66.6	64.6	228.90	30.18	6908.20
2006/11/16	09:16:00	1213.6	920.8	266.4	290.4	250.7	248.4	540.6	243.7	250.4	244.9	220.5	242.1	66.1	65.4	66.8	65.1	230.10	30.26	6962.83
2006/11/16	09:17:00	1214.0	921.5	266.4	290.7	250.2	248.6	540.9	242.4	250.4	245.1	220.6	242.2	66.2	65.5	66.6	64.8	229.20	30.22	6926.42
2006/11/16	09:18:00	1215.7	921.2	266.3	290.7	250.8	248.3	541.1	242.7	249.9	245.1	220.5	242.2	66.3	65.3	66.8	65.0	229.40	30.21	6930.17
2006/11/16	09:19:00	1215.4	922.0	266.4	289.4	250.9	248.7	541.1	233.3	249.9	245.1	220.7	242.2	66.1	65.6	67.2	64.8	229.00	30.18	6911.22
2006/11/16	09:20:00	1215.5	919.4	266.5	289.4	250.8	248.6	540.9	233.3	250.0	245.0	220.5	242.2	66.3	65.1	67.0	65.0	229.80	30.25	6951.45
2006/11/16	09:21:00	1214.4	922.1	266.3	289.9	249.9	248.6	540.7	246.7	250.2	245.1	220.8	242.2	66.4	65.5	67.0	65.5	230.00	30.23	6958.95
2006/11/16	09:22:00	1215.6	920.4	266.5	290.9	250.5	248.4	539.9	246.4	250.4	245.2	220.8	242.2	65.5	65.4	67.3	65.6	230.20	30.29	6975.79
2006/11/16	09:23:00	1214.9	921.8	266.4	290.9	250.7	248.3	540.3	252.0	250.9	245.5	220.7	242.2	65.5	65.5	66.4	65.6	228.80	30.06	6877.73
2006/11/16	09:24:00	1214.1	921.3	266.6	291.5	251.0	249.2	541.2	244.4	250.8	245.5	220.7	242.2	65.0	65.5	67.0	65.1	229.30	30.16	6915.69
2006/11/16	09:25:00	1215.1	923.1	266.6	290.9	250.5	249.2	541.2	254.5	250.4	245.6	220.9	242.4	65.4	64.8	66.6	65.1	228.90	30.17	6905.91
2006/11/16	09:26:00	1214.5	922.6	266.8	291.5	249.9	248.9	540.6	251.0	250.4	245.8	220.9	242.4	65.3	64.3	66.6	64.6	229.00	30.17	6908.93
2006/11/16	09:27:00	1213.5	921.8	266.7	291.2	250.4	248.9	541.4	253.1	250.8	246.0	220.7	242.4	65.7	65.3	66.2	64.8	229.90	30.27	6959.07
2006/11/16	09:28:00	1213.7	921.1	266.9	291.2	249.7	249.2	540.7	251.2	250.2	245.7	220.9	242.5	66.6	66.0	67.3	64.8	229.70	30.28	6955.32
2006/11/16	09:29:00	1214.4	921.0	266.8	290.9	250.7	248.9	541.9	246.0	250.5	245.8	220.8	242.5	65.2	65.5	67.6	66.1	229.10	30.21	6921.11
2006/11/16	09:30:00	1214.9	920.4	266.8	291.2	251.2	249.4	540.8	244.3	250.7	246.0	220.9	242.5	66.0	65.4	67.6	65.2	229.50	30.23	6937.79
2006/11/16	09:31:00	1214.1	921.7	266.7	291.2	250.2	248.9	538.7	246.6	251.2	246.1	220.9	242.5	66.1	65.7	67.0	65.4	229.50	30.23	6937.79
2006/11/16	09:32:00	1214.3	920.6	266.8	291.0	250.7	249.2	541.3	247.3	250.9	246.0	220.7	242.4	66.1	64.6	66.8	65.7	229.50	30.23	6937.79
2006/11/16	09:33:00	1213.9	923.5	266.8	291.0	250.5	249.2	541.7	251.2	250.8	246.1	220.9	242.5	66.2	64.6	66.4	65.1	229.70	30.26	6950.72
2006/11/16	09:34:00	1214.1	923.9	266.8	291.0	250.2	248.9	540.0	249.2	250.7	246.1	220.9	242.5	66.1	66.8	67.1	65.4	230.20	30.30	6975.06
2006/11/16	09:35:00	1215.4	917.4	266.7	291.8	250.4	249.2	539.9	244.6	250.7	246.1	220.9	242.5	66.2	64.8	67.1	65.0	229.70	30.20	6936.94
2006/11/16	09:36:00	1214.8	921.2	266.9	291.7	250.7	249.1	540.9	618.7	251.0	246.6	220.9	242.7	65.7	65.9	66.8	65.4	230.10	30.25	6966.58
2006/11/16	09:37:00	1215.9	917.4	267.0	290.4	250.4	249.2	540.6	613.9	250.5	246.3	221.2	242.7	66.8	64.8	67.0	65.0	229.80	30.25	6951.45
2006/11/16	09:38:00	1214.8	919.6	266.9	291.2	250.2	248.7	542.4	535.7	249.7	245.9	221.0	242.7	65.6	63.0	66.6	63.5	229.90	30.28	6963.67
2006/11/16	09:39:00	1214.7	921.1	266.8	290.7	249.4	248.7	540.7	579.0	249.9	245.6	220.9	242.5	65.8	63.0	66.1	63.6	230.10	30.26	6965.85
2006/11/16	09:40:00	1214.7	921.9	266.5	289.7	249.2	248.3	539.0	607.3	249.7	245.2	220.7	242.4	64.6	62.4	65.4	63.5	230.00	30.29	6966.70
2006/11/16	09:41:00	1214.2	921.9	266.4	290.4	249.4	247.9	539.6	622.8	249.6	245.2	220.5	242.2	64.6	63.4	65.3	63.8	230.10	30.29	6969.73

Heat Rise Test
1st Run

Date	Time	TC1	TC2	TC3	TC4	TC5	TC6	TC7	TC8	TC9	TC10	TC11	TC12	TC13	TC14	TC15	TC16	VDC	Amps	Watts
2006/11/16	09:42:00	1214.2	919.4	266.2	290.2	249.9	247.3	540.3	609.4	249.6	245.1	220.5	242.2	64.6	63.1	65.0	63.4	230.10	30.28	6969.73
2006/11/16	09:43:00	1214.2	920.5	266.2	290.7	249.9	248.1	539.7	610.5	249.7	244.7	220.6	242.2	64.4	61.9	65.0	62.6	230.10	30.29	6969.73
2006/11/16	09:44:00	1214.5	916.9	266.3	290.7	250.0	247.7	542.2	608.9	249.6	244.8	220.7	242.2	64.1	61.1	64.8	61.8	229.90	30.28	6961.37
2006/11/16	09:45:00	1214.2	919.9	266.4	290.9	250.2	248.1	539.8	609.1	249.6	245.0	220.7	242.1	63.9	61.8	64.8	61.9	230.10	30.28	6967.43
2006/11/16	09:46:00	1214.3	919.0	266.4	290.7	249.4	248.2	540.0	643.1	249.6	244.8	220.5	242.1	64.8	62.8	65.5	63.1	229.80	30.26	6956.77
2006/11/16	09:47:00	1214.6	921.1	266.4	290.4	249.2	247.8	542.2	632.9	249.6	244.8	220.7	242.2	64.6	62.8	65.3	62.6	230.10	30.24	6961.25
2006/11/16	09:48:00	1213.3	921.4	266.2	291.4	249.2	247.8	541.9	648.2	249.6	244.7	220.7	242.2	63.6	62.0	64.2	62.6	230.00	30.28	6964.40
2006/11/16	09:49:00	1213.8	919.3	266.5	290.2	249.1	248.2	540.4	635.3	249.2	244.8	220.7	242.2	64.3	62.8	64.6	62.3	230.20	30.29	6972.76
2006/11/16	09:50:00	1214.3	919.4	266.4	290.2	249.2	247.6	542.2	640.1	249.2	244.7	220.5	242.2	64.2	61.3	64.4	61.7	230.10	30.29	6969.73
2006/11/16	09:51:00	1214.4	920.5	266.6	290.6	248.9	248.4	540.5	645.2	249.9	244.9	220.5	242.2	64.3	62.2	64.8	62.0	229.50	30.23	6937.79
2006/11/16	09:52:00	1214.6	918.6	266.6	289.6	248.6	248.3	540.5	617.5	249.6	244.5	220.5	242.2	64.3	62.1	65.1	61.9	230.10	30.27	6971.18
2006/11/16	09:53:00	1214.0	922.1	266.5	289.8	249.4	248.4	539.7	617.5	249.9	245.0	220.5	242.2	64.3	63.0	65.1	62.8	228.10	30.11	6868.09
2006/11/16	09:54:00	1214.9	921.6	266.6	290.2	250.4	248.6	540.6	624.3	249.9	244.8	220.5	242.2	64.6	63.6	65.6	63.7	229.50	30.18	6933.20
2006/11/16	09:55:00	1215.2	920.0	266.8	289.7	249.4	248.2	541.1	626.6	249.9	245.2	220.6	242.4	63.8	62.4	65.3	63.3	229.50	30.21	6933.20
2006/11/16	09:56:00	1214.0	917.1	266.8	290.7	250.2	248.4	538.7	651.0	249.7	245.3	220.6	242.4	63.8	64.1	64.8	63.4	229.30	30.17	6929.45
2006/11/16	09:57:00	1214.0	919.9	266.8	290.7	249.2	248.6	540.9	662.6	250.7	245.5	220.5	242.4	63.7	64.1	65.4	63.5	229.20	30.19	6921.84
2006/11/16	09:58:00	1215.1	921.0	266.7	290.7	248.9	248.6	541.2	656.3	250.4	246.0	220.5	242.4	64.0	64.8	64.8	63.9	228.90	30.17	6905.91
2006/11/16	09:59:00	1213.9	924.8	266.6	290.9	249.6	248.4	541.1	661.9	250.4	245.8	220.7	242.5	64.2	64.2	64.6	64.2	230.10	30.24	6961.25
2006/11/16	10:00:00	1214.2	922.6	266.8	290.9	248.9	248.2	542.4	663.7	250.7	245.9	220.6	242.5	64.6	65.3	65.1	64.8	229.00	30.16	6906.64
2006/11/16	10:01:00	1214.1	922.6	266.9	290.2	249.7	248.6	539.6	643.9	250.7	245.8	220.8	242.5	65.0	63.6	66.0	64.0	229.50	30.23	6940.08
2006/11/16	10:02:00	1213.7	923.5	266.7	291.2	248.9	249.1	541.4	670.6	250.8	246.0	220.8	242.5	63.9	65.0	65.4	63.6	228.80	30.05	6878.45
2006/11/16	10:03:00	1213.7	921.0	266.9	291.2	249.7	248.9	540.4	697.3	250.4	245.7	220.7	242.5	64.4	63.5	65.3	63.4	228.30	30.05	6866.43
2006/11/16	10:04:00	1214.4	921.7	266.9	290.6	249.4	248.7	541.6	668.8	250.5	245.8	221.0	242.7	64.6	63.3	65.5	62.6	228.80	30.08	6882.30
2006/11/16	10:05:00	1214.4	923.5	266.8	290.2	248.9	248.9	541.7	656.6	250.4	246.3	220.8	242.7	64.1	63.1	64.8	63.0	229.80	30.27	6956.05
2006/11/16	10:06:00	1215.0	921.3	267.0	290.7	249.7	248.2	540.5	658.6	250.2	245.8	220.8	242.7	63.6	63.7	65.1	62.4	230.10	30.25	6966.58
2006/11/16	10:07:00	1216.4	923.5	267.1	290.1	249.9	248.7	542.4	652.2	250.7	245.8	221.1	242.7	64.8	63.5	65.4	63.4	229.70	30.26	6950.72
2006/11/16	10:08:00	1214.7	924.0	267.0	290.2	250.2	248.4	541.2	657.4	250.4	245.8	221.2	242.7	64.8	62.6	65.0	62.4	230.00	30.29	6966.70
2006/11/16	10:09:00	1214.9	921.7	267.2	290.9	249.1	248.7	541.3	650.7	250.7	246.1	221.1	242.7	63.7	62.8	65.4	62.8	229.70	30.26	6950.72
2006/11/16	10:10:00	1214.1	921.0	267.0	291.0	248.9	248.4	540.7	652.6	250.2	245.9	221.0	242.7	63.8	61.6	64.8	62.6	228.90	30.16	6903.62
2006/11/16	10:11:00	1213.9	921.0	267.0	290.7	250.2	248.1	540.9	666.8	249.9	245.6	221.0	242.7	64.3	61.9	64.3	61.7	229.50	30.26	6944.67
2006/11/16	10:12:00	1214.3	919.7	266.9	290.2	249.2	248.7	541.4	652.9	250.7	245.5	220.8	242.5	62.3	63.3	64.6	61.7	228.60	30.10	6880.86
2006/11/16	10:13:00	1214.3	919.6	266.9	291.2	248.9	248.4	540.9	650.8	250.4	246.0	220.7	242.5	62.4	62.6	64.2	63.3	229.60	30.17	6930.05
2006/11/16	10:14:00	1215.0	921.3	266.7	289.9	249.7	248.3	540.8	661.1	249.9	245.9	220.9	242.5	63.9	62.6	63.7	62.0	229.30	30.19	6922.57
2006/11/16	10:15:00	1216.3	919.7	267.0	290.2	249.7	248.7	541.4	648.9	250.8	246.3	220.8	242.5	63.3	64.0	64.4	63.6	228.00	30.11	6865.08
2006/11/16	10:16:00	1215.1	921.2	266.9	290.2	250.2	248.9	540.9	675.4	250.7	246.2	220.9	242.7	64.1	64.0	65.6	63.4	229.10	30.14	6911.95
2006/11/16	10:17:00	1214.2	922.4	267.3	290.7	249.2	249.1	541.4	690.1	251.3	246.5	220.9	242.9	64.8	65.0	65.7	64.1	229.50	30.15	6924.02
2006/11/16	10:18:00	1214.4	920.7	267.3	290.9	248.7	248.9	537.9	697.1	250.4	246.8	220.9	242.9	65.5	64.6	65.8	64.6	229.40	30.08	6903.36
2006/11/16	10:19:00	1214.3	919.1	267.1	290.4	249.2	248.9	540.5	691.4	250.4	246.6	221.0	242.9	64.6	63.5	65.1	62.8	228.50	30.09	6875.57
2006/11/16	10:20:00	1215.6	921.5	267.2	290.6	249.4	248.4	541.1	691.5	249.7	246.1	221.3	242.9	64.0	62.6	64.6	62.1	229.50	30.22	6935.49
2006/11/16	10:21:00	1215.4	920.1	267.0	290.4	249.4	248.9	539.9	714.7	250.2	246.1	221.0	242.7	63.8	61.9	64.3	62.2	229.60	30.20	6938.51
2006/11/16	10:22:00	1214.6	921.5	267.4	289.4	249.2	249.1	542.2	684.6	251.2	246.5	221.0	242.9	64.1	64.6	65.8	63.6	229.40	30.22	6932.47
2006/11/16	10:23:00	1215.1	922.9	267.4	291.2	249.7	249.2	542.0	683.3	250.7	246.7	220.9	242.9	64.8	62.8	65.6	63.7	229.30	30.22	6938.62
2006/11/16	10:24:00	1215.4	921.0	267.4	290.9	249.7	249.4	541.2	650.8	250.9	246.7	221.2	242.9	64.4	64.1	66.0	63.6	229.80	30.14	6935.21
2006/11/16	10:25:00	1214.7	923.1	267.4	291.2	250.7	249.2	541.9	629.6	251.3	247.0	220.9	242.9	64.6	65.4	66.0	65.3	229.80	30.24	6949.15
2006/11/16	10:26:00	1214.4	921.8	267.4	290.4	249.7	249.4	541.2	670.7	251.0	246.6	221.1	242.9	65.6	64.4	66.8	64.6	229.30	30.20	6931.74
2006/11/16	10:27:00	1216.3	920.2	267.3	290.1	248.9	248.7	540.9	671.1	251.2	246.9	221.1	242.9	64.6	63.5	66.1	64.6	229.70	30.17	6930.05
2006/11/16	10:28:00	1215.2	920.6	267.3	290.2	250.0	249.2	541.3	683.8	250.8	246.4	221.1	242.7	65.3	64.0	66.2	64.0	229.40	30.23	6934.76
2006/11/16	10:29:00	1214.6	922.3	267.3	290.4	250.5	248.9	541.4	675.1	250.8	246.4	221.0	242.7	65.4	64.2	66.1	64.1	230.00	30.28	6969.00
2006/11/16	10:30:00	1214.5	922.9	267.4	290.9	249.7	248.6	542.4	612.9	250.4	246.2	221.4	242.7	65.2	63.0	65.1	63.4	229.70	30.25	6948.43
2006/11/16	10:31:00	1214.4	920.6	267.3	290.2	250.0	248.7	539.8	676.0	250.7	245.9	221.2	242.7	64.8	61.9	65.0	62.6	229.70	30.22	6947.58
2006/11/16	10:32:00	1214.0	923.8	267.3	291.4	250.2	248.7	541.4	702.0	249.9	246.0	221.2	242.7	64.3	62.6	65.5	61.7	229.70	30.26	6950.72
2006/11/16	10:33:00	1214.8	920.0	267.2	290.2	250.4	248.9	542.4	687.5	250.7	246.0	221.1	242.7	63.5	62.2	65.5	61.9	229.40	30.23	6934.76
2006/11/16	10:34:00	1215.4	918.4	267.3	290.2	249.7	248.6	541.9	676.0	250.4	245.8	221.0	242.7	64.0	63.2	65.2	63.2	229.80	30.26	6953.75
2006/11/16	10:35:00	1213.5	921.2	267.3	289.8	249.6	248.7	542.2	681.7	250.4	246.0	221.1	242.7	64.3	61.8	64.6	62.3	230.10	30.30	6972.03
2006/11/16	10:36:00	1213.1	924.4	267.3	291.4	249.6	248.6	541.7	681.0	250.5	245.7	221.2	242.7	63.5	62.6	65.0	62.6	230.00	30.28	6964.40
2006/11/16	10:37:00	1214.6	920.8	267.3	289.9	249.4	248.4	540.5	695.1	249.9	245.8	221.2	242.7	63.4	62.3	64.8	63.0	230.20	30.30	6975.06

Heat Rise Test
1st Run

Date	Time	TC1	TC2	TC3	TC4	TC5	TC6	TC7	TC8	TC9	TC10	TC11	TC12	TC13	TC14	TC15	TC16	VDC	Amps	Watts
2006/11/16	10:38:00	1214.2	922.1	267.2	290.2	249.4	248.4	540.7	703.1	250.4	245.9	220.9	242.7	64.1	63.2	64.8	62.4	230.00	30.28	6964.40
2006/11/16	10:39:00	1213.6	921.0	267.1	290.2	248.7	248.4	540.2	673.6	250.5	246.0	221.0	242.7	64.3	63.4	64.6	63.3	230.10	30.30	6972.03
2006/11/16	10:40:00	1213.6	918.2	267.2	290.1	248.7	248.4	541.9	606.1	250.0	245.9	221.1	242.7	64.3	62.2	65.0	62.8	230.00	30.29	6966.70
2006/11/16	10:41:00	1213.9	920.7	267.4	291.7	249.9	248.4	541.6	687.8	250.4	245.7	221.1	242.7	64.6	62.6	65.5	62.3	230.10	30.28	6972.03
2006/11/16	10:42:00	1214.2	920.0	267.2	290.7	249.9	247.9	541.3	701.1	250.4	246.1	221.1	242.7	64.0	63.3	64.3	62.6	230.20	30.29	6972.76
2006/11/16	10:43:00	1214.9	920.0	267.2	290.4	249.1	248.7	540.5	689.3	250.2	246.0	221.0	242.7	64.2	62.3	64.6	62.6	230.10	30.30	6972.03
2006/11/16	10:44:00	1213.8	922.4	267.3	291.4	248.7	248.3	541.9	662.8	250.4	245.8	221.1	242.7	64.6	61.7	65.4	62.4	230.00	30.28	6964.40
2006/11/16	10:45:00	1213.9	921.4	267.4	289.9	249.6	248.7	540.5	641.4	249.9	245.7	221.0	242.7	64.2	62.8	65.1	61.9	230.00	30.29	6969.00
2006/11/16	10:46:00	1214.9	919.4	267.4	289.1	249.9	249.1	539.8	679.0	250.7	246.0	221.2	242.7	64.4	63.0	65.0	63.5	230.20	30.30	6975.06
2006/11/16	10:47:00	1214.3	921.5	267.3	290.2	249.7	248.4	542.2	662.6	249.9	245.8	221.1	242.7	64.3	61.7	64.4	62.6	230.10	30.28	6967.43
2006/11/16	10:48:00	1215.1	921.9	267.3	291.0	248.4	248.7	542.2	658.3	250.7	245.8	221.2	242.7	64.4	61.5	65.0	62.6	230.20	30.30	6975.06
2006/11/16	10:49:00	1214.4	920.2	267.4	289.7	248.4	248.7	541.9	676.7	251.0	246.2	220.8	242.7	64.6	62.8	64.8	64.0	229.90	30.28	6961.37
2006/11/16	10:50:00	1215.1	921.0	267.4	289.9	248.7	248.7	540.1	662.4	250.4	245.8	221.0	242.7	64.8	63.2	64.2	63.1	230.10	30.23	6958.95
2006/11/16	10:51:00	1215.1	920.4	267.3	291.0	249.4	248.7	541.3	655.3	250.7	245.7	221.1	242.7	65.0	62.6	64.1	62.8	229.60	30.25	6945.40
2006/11/16	10:52:00	1214.3	920.8	267.4	291.4	248.6	248.6	542.0	644.2	250.8	246.1	221.0	242.7	62.6	63.0	64.6	63.1	229.70	30.26	6950.72
2006/11/16	10:53:00	1214.5	920.1	267.4	290.4	247.7	248.3	542.2	666.8	250.8	246.1	220.8	242.7	63.7	63.7	63.9	63.6	229.90	30.29	6966.70
2006/11/16	10:54:00	1214.8	918.9	267.4	289.6	249.4	248.6	541.2	647.9	250.7	246.0	221.1	242.7	64.6	62.4	64.1	62.3	230.10	30.27	6967.43
2006/11/16	10:55:00	1215.1	919.6	267.6	290.7	249.9	248.7	543.0	651.1	250.4	245.9	221.2	242.7	64.6	63.8	65.4	62.3	229.40	30.18	6923.29
2006/11/16	10:56:00	1214.7	921.3	267.6	290.4	249.7	248.9	541.1	562.6	250.7	246.3	221.2	242.9	64.8	63.8	65.1	63.3	229.90	30.25	6959.07
2006/11/16	10:57:00	1216.1	919.7	267.4	289.2	249.2	248.9	541.9	564.6	250.7	245.9	221.1	242.9	64.6	63.1	65.4	63.9	229.70	30.25	6948.43
2006/11/16	10:58:00	1215.4	921.2	267.4	290.2	249.2	249.2	542.2	562.2	250.8	246.4	221.3	242.9	64.4	63.1	64.8	63.6	229.70	30.21	6948.30
2006/11/16	10:59:00	1214.7	922.6	267.6	290.2	249.4	248.6	542.0	559.0	250.4	246.4	221.2	242.9	64.8	62.2	64.8	63.1	229.20	30.20	6921.84
2006/11/16	11:00:00	1215.2	923.1	267.8	291.2	249.6	249.7	541.1	555.4	251.2	246.4	221.4	242.9	65.1	62.4	65.6	62.8	229.20	30.17	6922.57
2006/11/16	11:01:00	1214.1	921.6	267.7	290.2	249.6	249.1	539.4	531.3	251.0	246.5	221.3	242.9	65.1	64.1	65.3	63.5	229.00	30.13	6899.77
2006/11/16	11:02:00	1215.2	921.1	267.8	290.1	249.7	248.9	542.2	583.3	251.4	246.7	221.5	243.0	64.6	62.8	65.6	63.7	229.60	30.25	6945.40
2006/11/16	11:03:00	1214.6	923.3	267.9	291.4	249.9	248.9	541.7	579.1	250.9	246.4	221.5	243.0	64.6	62.3	65.4	63.3	229.70	30.26	6950.72
2006/11/16	11:04:00	1214.7	921.7	267.9	290.2	249.7	249.2	540.9	570.5	251.0	246.3	221.3	243.0	64.6	63.3	65.5	63.4	229.90	30.25	6954.47
2006/11/16	11:05:00	1214.4	920.8	267.9	290.4	249.2	248.9	542.2	576.9	251.2	246.4	221.4	243.0	64.8	63.1	65.0	63.1	229.40	30.23	6934.76
2006/11/16	11:06:00	1214.6	920.1	267.7	290.6	249.4	249.1	542.4	557.2	250.8	246.5	221.3	243.0	64.0	60.4	64.4	62.6	228.80	30.15	6898.32
2006/11/16	11:07:00	1215.1	919.1	267.7	290.7	249.6	249.1	541.4	586.3	250.4	246.1	221.1	242.9	63.2	60.4	64.6	62.1	229.70	30.26	6950.72
2006/11/16	11:08:00	1214.5	922.7	267.8	289.7	249.2	248.9	541.9	567.0	250.8	246.3	221.1	242.9	63.4	61.8	65.4	62.1	229.20	30.20	6921.84
2006/11/16	11:09:00	1215.1	922.1	267.8	289.6	248.9	248.4	541.9	560.4	250.8	246.0	221.2	242.9	64.1	63.1	65.4	62.8	229.40	30.21	6930.17
2006/11/16	11:10:00	1215.4	918.8	267.8	290.2	248.9	248.6	540.9	577.9	250.8	246.0	221.3	242.9	64.3	62.6	64.3	62.0	227.60	29.92	6809.79
2006/11/16	11:11:00	1215.4	919.4	267.8	290.1	249.6	248.4	541.2	568.2	250.5	246.5	221.2	242.9	64.6	62.8	64.8	62.2	229.60	30.19	6931.62
2006/11/16	11:12:00	1214.4	924.2	267.9	289.6	249.1	249.1	541.9	588.1	250.9	246.5	221.3	242.9	63.5	61.9	64.6	62.2	229.60	30.05	6920.52
2006/11/16	11:13:00	1214.4	921.9	267.8	290.6	248.9	248.9	541.3	574.6	251.0	246.5	221.1	242.9	63.0	63.0	64.0	63.2	229.30	30.19	6922.57
2006/11/16	11:14:00	1215.1	922.9	267.8	290.2	249.4	249.1	542.2	564.4	250.7	246.3	221.3	242.9	64.4	62.8	65.0	63.0	230.00	30.22	6959.67
2006/11/16	11:15:00	1214.2	920.5	267.9	290.4	248.7	249.2	540.9	576.4	251.3	246.4	221.2	242.9	64.1	61.9	65.2	63.1	230.10	30.29	6969.73
2006/11/16	11:16:00	1213.7	921.4	267.9	289.6	249.6	248.7	540.8	547.9	250.5	246.2	221.2	242.9	64.0	61.8	65.5	62.8	229.50	30.21	6933.20
2006/11/16	11:17:00	1214.4	921.2	267.9	290.4	249.7	248.7	540.9	556.6	250.7	246.3	221.0	242.9	63.1	62.8	65.1	62.8	228.90	30.14	6899.05
2006/11/16	11:18:00	1213.2	924.0	267.8	290.6	249.7	249.1	542.2	551.2	250.7	246.5	221.2	242.9	64.1	62.4	64.8	63.2	229.40	30.13	6929.90
2006/11/16	11:19:00	1213.7	922.4	267.9	289.9	249.2	249.1	541.7	557.4	250.4	246.6	221.2	243.0	64.2	63.0	65.2	62.0	229.00	30.17	6908.93
2006/11/16	11:20:00	1213.6	921.1	267.9	290.1	250.0	248.9	542.4	566.1	250.2	246.2	221.2	242.9	64.2	62.6	65.3	61.2	229.50	30.20	6930.90
2006/11/16	11:21:00	1213.4	920.0	267.9	290.7	249.9	248.6	543.2	572.4	250.7	246.2	221.3	243.0	64.4	63.0	65.1	62.3	230.00	30.27	6962.10
2006/11/16	11:22:00	1214.1	920.9	268.1	289.6	249.6	248.7	542.4	550.2	250.7	246.4	221.2	243.0	64.1	63.0	64.8	63.1	230.00	30.28	6966.70
2006/11/16	11:23:00	1214.0	921.8	268.1	289.4	249.4	248.9	542.0	556.1	250.4	246.1	221.3	243.0	64.1	62.8	64.4	62.8	229.80	30.27	6956.05
2006/11/16	11:24:00	1214.4	919.9	268.2	289.9	249.4	249.1	542.4	569.8	250.8	246.2	221.4	243.0	63.8	61.8	64.8	62.2	229.10	30.14	6905.07
2006/11/16	11:25:00	1214.8	922.3	268.2	289.7	249.9	249.2	541.1	560.7	250.7	246.2	221.2	243.0	63.8	62.8	65.1	62.6	229.30	30.18	6920.27
2006/11/16	11:26:00	1215.1	921.4	268.2	290.4	248.9	249.4	542.4	576.9	250.8	246.5	221.4	243.2	63.7	63.2	65.7	62.0	228.90	30.11	6903.62
2006/11/16	11:27:00	1214.6	921.4	267.9	290.4	249.4	249.2	540.9	554.9	250.8	246.5	221.3	243.2	64.4	63.8	65.2	62.2	229.30	30.15	6913.40
2006/11/16	11:28:00	1214.4	921.6	268.1	289.4	250.2	249.2	541.9	562.7	250.7	246.3	221.4	243.0	65.3	63.0	65.1	63.1	229.80	30.25	6951.45
2006/11/16	11:29:00	1215.5	920.1	268.2	290.2	250.2	249.2	541.4	565.2	251.0	246.5	221.4	243.0	65.1	63.1	65.6	63.4	229.90	30.28	6961.37
2006/11/16	11:30:00	1215.5	920.1	268.2	289.8	250.4	249.6	540.8	561.4	251.2	246.3	221.1	243.0	64.8	64.0	65.7	63.2	229.70	30.15	6925.45
2006/11/16	11:31:00	1214.9	921.4	268.2	290.9	249.9	249.1	542.2	576.4	251.3	246.6	221.4	243.2	64.8	64.6	65.4	63.7	229.70	30.22	6941.53
2006/11/16	11:32:00	1214.8	921.8	268.2	290.9	249.6	249.6	542.2	584.4	251.5	246.6	221.3	243.2	64.2	63.1	65.0	63.7	229.60	30.22	6938.51
2006/11/16	11:33:00	1214.7	920.4	268.2	290.9	249.4	248.9	542.7	559.9	250.7	246.7	221.2	243.2	64.0	62.6	64.8	63.2	229.30	30.23	6931.74

Heat Rise Test
1st Run

Date	Time	TC1	TC2	TC3	TC4	TC5	TC6	TC7	TC8	TC9	TC10	TC11	TC12	TC13	TC14	TC15	TC16	VDC	Amps	Watts
2006/11/16	11:34:00	1214.4	921.6	268.2	290.2	249.7	249.6	542.2	591.9	251.0	246.3	221.3	243.2	64.2	62.6	65.4	63.2	229.30	30.24	6934.03
2006/11/16	11:35:00	1214.9	919.9	268.2	290.7	250.2	249.4	541.4	578.9	251.2	246.6	221.2	243.2	64.3	63.5	65.6	62.8	229.70	30.23	6943.83
2006/11/16	11:36:00	1214.5	917.1	268.2	289.7	249.1	249.4	540.7	566.5	250.4	246.6	221.1	243.2	64.8	64.3	65.7	63.2	229.30	30.22	6929.45
2006/11/16	11:37:00	1216.1	918.9	268.2	289.8	249.6	249.1	542.0	564.7	250.7	246.8	221.4	243.2	64.8	62.8	65.4	62.6	229.80	30.24	6952.18
2006/11/16	11:38:00	1214.4	923.8	268.2	290.9	249.2	248.9	541.9	559.8	250.8	246.5	221.5	243.2	64.3	61.7	64.3	62.1	229.70	30.25	6948.43
2006/11/16	11:39:00	1214.6	921.7	268.2	290.9	249.6	248.9	541.4	575.9	250.9	246.2	221.3	243.2	65.0	62.2	65.0	63.1	229.60	30.19	6931.62
2006/11/16	11:40:00	1214.0	919.7	267.9	290.9	248.7	248.6	542.4	584.9	251.2	246.5	221.3	243.2	65.1	63.4	64.8	63.5	229.70	30.09	6911.67
2006/11/16	11:41:00	1214.4	919.6	268.2	290.1	249.4	249.2	540.3	603.4	250.8	246.6	221.3	243.2	64.4	63.0	65.6	63.1	229.90	30.26	6956.77
2006/11/16	11:42:00	1215.2	919.6	268.2	289.9	249.7	249.4	540.7	584.6	251.4	246.5	221.2	243.2	64.2	62.8	65.4	62.8	229.30	30.20	6924.86
2006/11/16	11:43:00	1215.9	918.3	268.2	289.2	250.2	249.7	540.4	594.7	250.7	246.7	221.3	243.2	64.0	62.0	65.7	61.8	229.50	30.23	6937.79
2006/11/16	11:44:00	1214.6	921.3	268.4	289.2	249.7	249.4	542.2	594.7	251.2	246.6	221.4	243.2	65.0	63.8	65.4	62.4	229.50	30.17	6924.02
2006/11/16	11:45:00	1215.6	919.9	268.4	290.4	249.9	248.9	541.9	573.9	251.4	246.7	221.5	243.4	65.0	64.0	65.5	62.8	228.70	30.22	6911.31
2006/11/16	11:46:00	1214.8	921.5	268.6	290.4	250.2	249.4	543.1	567.3	251.2	246.8	221.6	243.4	64.6	63.8	65.2	63.0	229.60	30.17	6938.51
2006/11/16	11:47:00	1215.1	921.7	268.4	289.7	249.9	249.7	542.7	562.0	251.2	246.6	221.5	243.4	64.2	63.6	65.5	63.3	229.60	30.22	6938.51
2006/11/16	11:48:00	1214.8	921.8	268.6	290.6	250.7	249.9	541.9	563.9	251.6	247.1	221.4	243.4	64.6	63.7	65.6	64.0	229.30	30.25	6936.33
2006/11/16	11:49:00	1214.1	922.7	268.6	290.9	250.2	249.9	542.4	554.6	251.5	247.1	221.7	243.4	64.8	63.3	65.5	63.6	229.90	30.25	6959.07
2006/11/16	11:50:00	1214.6	922.0	268.4	290.9	249.7	249.7	541.4	563.5	251.5	247.0	221.6	243.4	65.1	63.2	65.9	63.1	229.90	30.28	6961.37
2006/11/16	11:51:00	1213.8	920.5	268.7	290.7	250.2	249.6	541.2	560.4	251.4	246.9	221.7	243.4	64.4	63.1	65.5	63.1	229.90	30.26	6959.07
2006/11/16	11:52:00	1214.2	920.6	268.6	290.9	249.9	249.7	543.4	538.4	251.4	246.8	221.7	243.4	64.4	63.7	65.8	63.1	228.90	30.15	6912.78
2006/11/16	11:53:00	1214.4	921.4	268.6	289.7	249.9	249.7	542.8	548.1	251.4	246.5	221.5	243.4	64.8	63.5	65.8	63.6	229.90	30.27	6959.07
2006/11/16	11:54:00	1214.7	920.5	268.7	290.9	249.7	249.7	541.7	540.0	251.5	246.8	221.6	243.4	65.1	63.4	65.8	63.8	229.70	30.26	6953.02
2006/11/16	11:55:00	1214.9	920.1	268.4	289.7	249.9	249.7	542.2	552.3	251.6	247.0	221.5	243.4	64.6	63.8	65.0	63.8	229.90	30.24	6956.77
2006/11/16	11:56:00	1215.4	919.3	268.6	290.9	249.6	249.4	540.9	539.4	251.5	247.0	221.5	243.4	63.7	64.3	65.3	63.0	230.00	30.25	6957.50
2006/11/16	11:57:00	1214.3	921.5	268.7	291.2	249.9	249.7	541.7	497.8	251.6	247.0	221.6	243.4	64.6	63.6	65.3	63.0	230.10	30.27	6965.13
2006/11/16	11:58:00	1215.4	920.9	268.4	290.9	249.7	249.7	541.4	499.5	251.5	246.8	221.6	243.4	65.2	62.8	65.4	63.4	229.80	30.25	6951.45
2006/11/16	11:59:00	1215.7	921.3	268.4	289.7	250.0	249.4	541.9	550.7	251.5	246.9	221.6	243.4	65.0	62.8	65.4	62.8	229.50	30.19	6928.61
2006/11/16	12:00:00	1215.4	922.1	268.7	290.7	249.4	250.0	540.9	484.3	251.9	246.9	221.5	243.4	63.1	64.6	65.3	63.1	229.80	30.26	6953.75
2006/11/16	12:01:00	1215.4	922.1	268.6	289.7	249.7	249.4	540.2	487.4	251.6	247.3	221.4	243.4	63.2	63.1	65.1	64.1	229.50	30.25	6942.38
2006/11/16	12:02:00	1214.9	921.3	268.7	291.5	250.0	249.4	542.7	492.5	251.6	246.8	221.5	243.4	65.0	63.6	65.8	63.9	229.40	30.25	6939.35
2006/11/16	12:03:00	1214.6	921.7	268.7	289.9	249.2	249.7	541.9	500.5	251.6	247.1	221.5	243.4	65.0	64.3	66.2	63.8	229.80	30.27	6956.05
2006/11/16	12:04:00	1214.4	921.1	268.7	290.4	250.2	249.7	540.9	482.6	251.6	247.3	221.3	243.4	64.3	63.2	65.8	63.2	229.70	30.24	6946.13
2006/11/16	12:05:00	1214.7	919.9	268.7	290.2	250.4	249.7	541.7	525.2	251.5	247.1	221.7	243.4	64.8	63.5	65.6	63.4	230.00	30.29	6966.70
2006/11/16	12:06:00	1214.4	921.5	268.6	290.9	249.9	249.6	540.9	511.2	251.7	247.0	221.8	243.5	65.0	63.6	65.8	63.5	230.00	30.26	6962.83
2006/11/16	12:07:00	1214.2	920.0	268.7	290.4	249.9	249.9	540.5	471.7	251.0	247.0	221.7	243.5	64.6	63.2	65.4	63.8	229.80	30.24	6949.15
2006/11/16	12:08:00	1215.0	919.1	268.7	289.8	250.2	249.4	542.0	505.2	250.9	246.8	221.7	243.5	64.3	62.6	65.2	63.7	229.70	30.24	6953.02
2006/11/16	12:09:00	1215.9	921.5	268.7	290.9	249.7	249.6	542.7	488.4	250.9	246.9	221.8	243.5	64.4	62.8	65.5	62.8	229.90	30.26	6959.07
2006/11/16	12:10:00	1214.3	922.1	268.7	290.7	248.9	249.7	543.5	486.7	251.5	247.0	221.8	243.5	64.4	63.2	65.3	62.6	229.00	30.16	6906.64
2006/11/16	12:11:00	1214.3	920.1	268.7	290.2	250.4	249.7	541.1	496.2	251.5	246.9	221.6	243.4	65.3	63.6	65.8	63.1	229.70	30.18	6947.44
2006/11/16	12:12:00	1215.1	920.2	268.7	290.1	250.0	249.2	542.2	496.7	251.7	247.0	221.5	243.5	64.6	64.4	65.6	63.3	230.00	30.25	6966.70
2006/11/16	12:13:00	1214.6	922.9	268.7	291.0	249.6	249.7	543.8	509.4	251.8	247.7	221.4	243.4	64.1	64.2	65.0	64.8	229.80	30.25	6951.45
2006/11/16	12:14:00	1214.4	919.4	268.7	291.2	249.9	249.7	542.2	501.5	251.8	247.3	221.5	243.4	63.7	63.3	65.5	64.1	229.20	30.20	6921.84
2006/11/16	12:15:00	1214.5	920.6	268.7	290.7	250.4	249.7	541.9	504.3	251.2	247.1	221.5	243.4	64.2	63.6	65.6	63.4	229.90	30.23	6949.88
2006/11/16	12:16:00	1214.7	922.6	268.9	290.6	249.1	249.6	542.4	503.0	251.2	247.0	221.7	243.4	64.3	63.6	65.2	62.3	230.10	30.29	6969.73
2006/11/16	12:17:00	1215.1	922.6	268.7	290.9	248.9	249.6	542.2	496.0	251.8	247.4	221.5	243.5	63.2	64.0	65.1	62.8	229.10	30.18	6914.24
2006/11/16	12:18:00	1214.4	922.3	268.9	290.9	250.0	249.9	542.8	502.1	251.7	247.5	221.6	243.5	63.6	63.9	65.5	63.2	230.10	30.27	6968.15
2006/11/16	12:19:00	1214.3	923.4	268.9	290.4	250.2	250.2	541.2	499.4	251.5	247.5	221.8	243.5	64.8	63.6	65.9	63.8	229.90	30.28	6961.37
2006/11/16	12:20:00	1214.7	922.4	269.0	291.2	249.9	250.2	540.8	529.4	251.6	247.3	221.9	243.7	65.5	64.1	66.1	63.3	229.70	30.26	6950.72
2006/11/16	12:21:00	1214.7	923.3	268.9	291.2	250.0	249.7	541.6	513.9	251.6	247.3	221.9	243.7	63.9	63.8	65.4	63.3	230.10	30.27	6965.13
2006/11/16	12:22:00	1214.2	921.8	268.9	290.4	249.6	250.0	541.4	574.1	251.8	247.6	221.8	243.7	63.5	62.0	65.6	63.3	230.00	30.26	6959.80
2006/11/16	12:23:00	1215.1	922.1	268.9	289.9	249.7	249.7	541.3	545.4	250.9	247.4	221.7	243.7	64.3	63.7	65.6	61.8	229.70	30.16	6927.75
2006/11/16	12:24:00	1214.4	925.1	269.2	290.9	249.4	249.9	541.9	552.1	252.1	247.5	221.7	243.7	64.8	64.3	65.3	63.3	229.80	30.23	6946.85
2006/11/16	12:25:00	1214.6	920.8	269.2	289.0	250.5	249.9	541.9	538.7	252.4	247.6	221.7	243.7	65.3	64.8	65.4	64.0	229.30	30.22	6929.45
2006/11/16	12:26:00	1214.4	920.8	269.2	290.7	250.8	250.4	542.9	565.7	252.1	247.9	221.9	243.8	65.4	63.5	65.8	63.7	229.30	30.18	6920.27
2006/11/16	12:27:00	1214.4	920.1	269.0	291.0	249.9	250.2	543.1	538.4	251.9	247.8	221.7	243.7	64.8	63.8	65.5	63.3	229.80	30.25	6951.45
2006/11/16	12:28:00	1215.0	923.7	269.2	290.9	249.7	249.7	542.4	516.0	251.9	247.7	221.8	243.7	64.8	63.4	65.4	63.1	229.90	30.21	6948.30
2006/11/16	12:29:00	1214.1	921.5	268.9	291.2	249.6	249.7	542.2	520.0	251.8	247.9	221.8	243.7	65.3	63.4	65.3	63.4	230.00	30.26	6959.80

Heat Rise Test
1st Run

Date	Time	TC1	TC2	TC3	TC4	TC5	TC6	TC7	TC8	TC9	TC10	TC11	TC12	TC13	TC14	TC15	TC16	VDC	Amps	Watts
2006/11/16	12:30:00	1213.5	921.6	269.0	290.4	249.4	249.9	543.4	526.7	251.9	247.6	221.7	243.7	64.2	63.4	65.5	62.6	229.60	30.27	6954.58
2006/11/16	12:31:00	1214.6	922.9	269.2	290.9	249.7	250.2	543.5	518.1	252.2	247.6	221.8	243.7	64.8	63.9	65.4	63.0	229.50	30.21	6933.20
2006/11/16	12:32:00	1214.8	921.5	269.0	290.2	249.7	249.7	542.9	536.0	251.8	247.6	221.8	243.7	64.6	63.0	65.1	62.8	229.90	30.26	6956.77
2006/11/16	12:33:00	1215.2	921.0	268.9	290.9	250.4	250.0	542.2	510.2	251.4	247.4	221.9	243.7	64.6	63.5	65.6	62.6	229.70	30.26	6950.72
2006/11/16	12:34:00	1214.7	919.1	269.2	290.9	250.7	250.0	542.0	530.2	252.1	247.2	221.9	243.7	64.6	63.2	65.5	63.3	229.90	30.26	6956.77
2006/11/16	12:35:00	1214.3	920.1	269.0	290.7	249.9	249.6	541.9	533.6	251.6	247.3	221.7	243.7	64.6	62.2	64.8	63.5	229.50	30.22	6937.79
2006/11/16	12:36:00	1213.6	918.8	269.0	290.9	249.7	249.9	541.4	515.4	251.4	247.3	221.6	243.7	65.2	63.1	65.2	63.6	229.90	30.23	6958.95
2006/11/16	12:37:00	1214.0	922.4	269.2	291.4	249.9	249.9	542.0	556.7	251.6	247.3	221.8	243.7	65.1	63.9	65.8	63.3	230.10	30.29	6969.73
2006/11/16	12:38:00	1215.1	918.7	269.2	290.7	250.2	250.2	542.2	534.9	252.0	247.2	221.8	243.7	64.8	64.1	65.5	63.9	229.30	30.19	6922.57
2006/11/16	12:39:00	1213.7	922.1	269.0	290.4	249.7	250.2	542.4	529.4	251.8	247.8	221.8	243.8	64.3	64.2	65.1	63.5	230.10	30.29	6969.73
2006/11/16	12:40:00	1213.6	925.3	269.0	290.9	249.7	250.2	543.9	1183.5	251.9	247.7	221.9	243.9	65.0	63.9	65.1	63.3	229.90	30.28	6966.70
2006/11/16	12:41:00	1213.5	922.7	269.4	291.7	250.4	250.4	542.2	1204.9	251.7	247.9	222.0	243.9	64.3	63.9	65.4	63.1	229.50	30.22	6935.49
2006/11/16	12:42:00	1213.3	922.1	269.2	290.7	250.0	250.2	541.7	1206.3	251.7	247.8	221.8	243.8	64.8	63.9	66.0	63.1	229.50	30.17	6924.02
2006/11/16	12:43:00	1215.0	923.3	269.2	290.4	250.7	250.4	542.2	1097.4	251.9	248.1	221.7	243.8	64.2	63.5	66.1	64.0	230.00	30.28	6964.40
2006/11/16	12:44:00	1215.1	921.2	269.2	289.7	250.9	250.4	542.4	1166.1	252.2	248.1	221.7	243.8	64.2	64.0	65.1	63.9	229.80	30.23	6965.24
2006/11/16	12:45:00	1214.4	922.6	269.2	290.4	250.0	250.2	543.1	1204.9	252.1	247.9	221.8	243.8	64.6	64.0	64.6	64.2	229.50	30.25	6942.38
2006/11/16	12:46:00	1214.1	921.3	269.4	290.9	250.2	250.4	541.1	1209.4	251.8	247.9	222.0	243.9	65.0	63.6	66.0	64.0	230.00	30.29	6966.70
2006/11/16	12:47:00	1214.4	919.0	269.2	290.6	250.2	250.4	541.2	1216.6	251.5	247.7	221.9	243.9	65.4	63.2	66.0	63.0	229.90	30.21	6952.18
2006/11/16	12:48:00	1214.2	920.7	269.4	290.7	249.9	250.2	542.5	1203.3	251.9	247.8	221.7	243.9	65.5	64.1	65.8	64.0	229.60	30.23	6945.40
2006/11/16	12:49:00	1213.8	924.0	269.4	291.7	250.0	250.4	542.0	1205.8	252.0	247.7	221.9	243.9	64.4	62.3	66.1	63.0	229.40	30.23	6934.76
2006/11/16	12:50:00	1213.6	922.4	269.4	290.6	250.4	250.2	543.3	1213.6	252.2	247.7	221.9	243.8	64.6	62.2	65.9	62.8	229.30	30.23	6936.33
2006/11/16	12:51:00	1214.7	920.4	269.2	289.8	250.0	250.4	542.0	1214.3	251.9	247.5	221.9	243.8	64.8	63.3	65.5	62.4	229.30	30.23	6940.81
2006/11/16	12:52:00	1215.1	921.9	269.2	290.7	249.7	249.9	542.9	1223.7	251.6	247.5	221.9	243.8	65.1	61.6	64.8	62.6	230.00	30.23	6966.70
2006/11/16	12:53:00	1214.7	922.0	269.4	290.4	250.0	249.7	542.4	1219.8	251.5	247.3	221.9	243.7	65.1	63.2	65.6	62.8	229.10	30.17	6911.95
2006/11/16	12:54:00	1213.7	923.1	269.4	291.2	250.2	250.2	542.4	1220.9	251.6	247.4	222.0	243.8	65.3	63.4	65.4	63.1	229.90	30.27	6959.07
2006/11/16	12:55:00	1214.1	923.9	269.4	290.7	249.7	250.0	543.9	1217.3	251.6	247.4	222.0	243.8	64.3	62.8	65.4	63.2	229.70	30.17	6936.08
2006/11/16	12:56:00	1213.7	922.6	269.4	290.4	250.2	250.0	542.4	1225.9	251.6	247.4	221.8	243.8	64.8	63.1	65.5	63.4	229.70	30.27	6964.40
2006/11/16	12:57:00	1213.6	921.1	269.4	290.6	249.9	250.2	543.3	1217.2	251.8	247.6	221.7	243.8	64.6	64.2	65.8	63.8	229.90	30.25	6954.47
2006/11/16	12:58:00	1213.5	925.1	269.7	290.9	249.9	250.5	542.7	1225.3	252.1	247.7	221.8	243.9	65.3	63.3	65.7	63.5	229.80	30.23	6946.85
2006/11/16	12:59:00	1213.8	919.9	269.7	290.4	250.7	250.2	543.4	1213.3	252.1	247.7	221.9	244.0	65.4	63.7	65.7	63.4	229.90	30.27	6959.07
2006/11/16	13:00:00	1213.9	923.2	269.7	291.9	250.2	250.5	542.2	1213.3	252.2	247.8	221.9	244.0	65.0	64.0	66.0	63.8	229.30	30.24	6938.62
2006/11/16	13:01:00	1214.8	920.2	269.7	290.4	250.5	250.4	542.4	1211.1	252.0	247.8	221.9	244.0	65.1	64.0	65.7	63.9	229.90	30.28	6961.37
2006/11/16	13:02:00	1214.3	924.6	269.4	291.0	250.4	250.4	542.4	1212.3	252.4	248.3	222.0	244.2	64.8	63.3	65.5	63.6	230.10	30.29	6969.73
2006/11/16	13:03:00	1215.1	920.6	269.4	291.7	249.7	250.5	540.8	1228.8	252.2	247.8	221.8	244.2	65.3	63.3	65.3	63.5	230.20	30.30	6975.06
2006/11/16	13:04:00	1214.5	921.6	269.7	291.8	251.2	250.4	542.2	1203.4	252.0	247.9	221.9	244.0	65.4	64.4	66.0	64.1	230.10	30.30	6972.03
2006/11/16	13:05:00	1214.4	918.8	269.8	291.2	251.2	250.7	542.4	1234.0	252.9	248.1	221.9	244.2	64.3	64.3	66.1	64.2	230.20	30.30	6975.06
2006/11/16	13:06:00	1214.4	921.7	269.7	291.4	249.7	250.7	542.2	1239.9	252.4	248.7	221.8	244.2	63.9	65.1	66.1	64.4	230.20	30.29	6972.76
2006/11/16	13:07:00	1213.3	923.0	269.7	291.4	249.9	250.7	542.2	1228.4	252.9	248.7	221.9	244.0	64.0	64.6	65.8	64.6	230.20	30.30	6975.06
2006/11/16	13:08:00	1213.3	924.1	269.7	290.7	249.2	250.4	542.4	1223.7	253.2	248.9	221.8	244.0	65.4	64.8	65.8	65.7	230.20	30.30	6975.06
2006/11/16	13:09:00	1215.2	921.4	269.5	290.9	250.4	249.9	540.9	1233.1	252.8	248.7	221.8	244.0	65.2	63.2	64.8	63.9	230.20	30.30	6975.06
2006/11/16	13:10:00	1215.0	921.6	269.7	290.4	250.5	250.0	541.6	1243.0	252.6	247.9	221.8	244.0	65.0	63.6	64.8	64.0	230.20	30.30	6975.06
2006/11/16	13:11:00	1214.6	922.6	269.8	291.2	250.2	249.9	543.1	1235.8	252.1	248.4	221.9	244.0	64.2	63.6	65.2	64.1	230.20	30.30	6975.06
2006/11/16	13:12:00	1214.4	920.2	269.8	290.6	249.9	250.4	540.9	1246.3	251.9	248.4	221.7	244.0	64.0	64.4	65.4	64.8	230.20	30.30	6975.06
2006/11/16	13:13:00	1215.4	922.1	269.8	290.9	249.6	250.2	541.7	1237.9	252.9	248.7	221.8	244.0	63.9	63.6	65.1	65.2	230.20	30.30	6975.06
2006/11/16	13:14:00	1215.1	919.6	269.9	290.9	250.7	250.5	540.6	1227.9	252.3	248.4	221.9	244.0	65.3	64.1	66.1	65.0	230.20	30.30	6975.06
2006/11/16	13:15:00	1215.0	923.3	269.9	290.6	250.0	250.7	543.3	1035.8	252.4	248.6	222.2	244.2	65.7	64.6	66.4	64.3	230.20	30.30	6975.06
2006/11/16	13:16:00	1214.2	920.9	270.0	291.0	249.7	250.9	542.9	1120.4	252.9	248.4	222.1	244.2	64.8	64.6	66.2	64.3	230.20	30.29	6972.76
2006/11/16	13:17:00	1214.6	922.1	269.9	291.2	249.9	250.4	541.7	1141.5	253.2	249.1	222.1	244.2	64.0	64.0	65.4	64.4	230.20	30.30	6975.06
2006/11/16	13:18:00	1215.0	920.8	269.8	290.6	250.7	250.5	542.8	1200.7	252.9	248.7	222.2	244.2	64.8	64.1	66.1	64.2	230.20	30.30	6975.06
2006/11/16	13:19:00	1214.3	922.0	269.9	291.7	250.9	250.8	542.7	1200.5	252.6	248.7	222.0	244.3	65.6	64.8	66.6	64.8	230.00	30.30	6971.30
2006/11/16	13:20:00	1214.8	922.6	270.0	291.0	250.2	250.5	543.2	1202.6	252.9	248.7	222.3	244.3	65.0	65.0	67.1	64.6	230.20	30.30	6975.06
2006/11/16	13:21:00	1214.4	922.1	269.8	291.5	249.9	250.4	541.4	1181.0	252.8	248.7	222.2	244.2	65.3	64.2	65.9	64.3	230.10	30.30	6972.03
2006/11/16	13:22:00	1215.2	921.8	270.2	291.4	250.8	250.4	542.2	1200.1	252.4	248.4	222.3	244.2	64.6	64.6	65.6	64.2	230.20	30.30	6975.06
2006/11/16	13:23:00	1215.0	922.9	270.0	290.9	249.4	250.2	541.3	1190.7	252.4	248.7	222.2	244.2	64.2	65.6	64.8	64.2	229.20	30.19	6919.55
2006/11/16	13:24:00	1214.4	922.7	270.0	290.9	248.9	250.2	542.2	1198.0	253.0	248.9	222.0	244.2	65.5	65.6	65.1	65.8	230.20	30.30	6975.06
2006/11/16	13:25:00	1213.2	921.4	269.7	290.9	250.2	250.4	543.5	1185.3	252.7	249.2	222.2	244.2	64.4	64.4	65.1	65.1	230.20	30.30	6975.06

Heat Rise Test
1st Run

Date	Time	TC1	TC2	TC3	TC4	TC5	TC6	TC7	TC8	TC9	TC10	TC11	TC12	TC13	TC14	TC15	TC16	VDC	Amps	Watts
2006/11/16	13:26:00	1213.5	919.9	269.9	290.4	250.7	250.5	543.0	1199.8	252.6	248.7	222.2	244.2	64.6	63.8	65.9	64.6	230.20	30.30	6975.06
2006/11/16	13:27:00	1213.9	921.5	270.0	290.4	250.4	250.2	541.7	1126.7	252.8	248.9	222.2	244.2	65.1	63.8	65.2	63.9	230.10	30.29	6969.73
2006/11/16	13:28:00	1214.0	920.6	270.2	290.9	250.0	250.4	541.4	1193.9	252.6	248.9	222.3	244.2	64.8	64.6	65.2	64.4	230.20	30.29	6972.76
2006/11/16	13:29:00	1213.5	920.6	270.2	290.7	250.5	250.5	541.9	1192.1	253.2	249.2	222.2	244.3	64.8	64.0	65.8	65.7	230.20	30.29	6972.76
2006/11/16	13:30:00	1214.4	921.0	270.0	291.2	250.5	250.2	541.4	1188.6	252.9	249.4	222.1	244.3	65.3	65.4	66.0	65.3	230.20	30.30	6977.36
2006/11/16	13:31:00	1214.0	919.9	269.9	290.9	250.5	250.5	541.3	1186.8	252.6	249.2	222.2	244.3	65.3	66.8	66.0	65.1	230.20	30.30	6975.06
2006/11/16	13:32:00	1213.6	918.3	270.2	291.0	250.4	250.9	541.6	1208.2	253.1	249.4	222.3	244.3	64.6	66.2	65.9	65.7	230.20	30.30	6975.06
2006/11/16	13:33:00	1214.1	922.9	270.2	291.4	251.2	250.9	542.9	1195.5	253.5	249.4	222.2	244.4	65.4	67.1	66.4	65.8	230.20	30.30	6975.06
2006/11/16	13:34:00	1214.2	920.4	270.2	291.7	250.7	249.6	541.9	1206.9	253.2	249.7	222.3	244.4	65.9	67.3	66.0	65.1	230.10	30.29	6969.73
2006/11/16	13:35:00	1214.1	920.6	270.3	291.9	250.7	250.7	542.4	1202.6	253.6	249.6	222.4	244.4	66.6	66.3	66.2	65.7	230.20	30.30	6977.36
2006/11/16	13:36:00	1215.1	919.6	270.2	291.2	251.0	250.8	542.8	1211.0	253.8	249.7	222.5	244.5	66.6	65.7	67.6	66.3	230.20	30.30	6975.06
2006/11/16	13:37:00	1214.4	922.1	270.5	290.7	250.9	250.8	540.6	1115.6	253.8	249.9	222.6	244.7	66.8	66.3	65.8	66.8	230.20	30.30	6977.36
2006/11/16	13:38:00	1214.4	921.5	270.5	292.0	251.0	251.2	542.7	1175.7	253.7	250.0	222.8	244.7	67.3	66.3	66.3	66.6	230.20	30.29	6975.06
2006/11/16	13:39:00	1213.9	923.7	270.5	292.7	251.2	251.2	543.4	1168.6	253.9	250.0	222.6	244.7	66.1	66.3	66.6	66.4	230.10	30.29	6969.73
2006/11/16	13:40:00	1213.8	922.4	270.5	291.8	250.8	250.8	543.4	1183.5	254.2	250.2	222.7	244.7	66.4	66.8	66.6	66.6	230.10	30.29	6972.76
2006/11/16	13:41:00	1213.9	920.6	270.6	291.7	251.4	251.3	543.5	1181.9	253.9	250.4	222.6	244.7	66.6	66.2	66.6	66.3	230.20	30.29	6975.06
2006/11/16	13:42:00	1214.2	920.5	270.6	292.8	250.4	250.7	542.2	1195.4	253.6	250.4	222.8	244.7	66.2	65.9	66.8	65.8	230.10	30.28	6972.03
2006/11/16	13:43:00	1214.1	924.3	270.6	292.2	250.7	251.4	542.4	1177.9	254.1	250.7	222.6	244.8	66.0	66.4	67.6	66.4	230.00	30.28	6964.40
2006/11/16	13:44:00	1214.4	921.2	269.7	292.2	250.7	250.7	541.1	1191.4	253.6	250.4	222.7	244.8	66.2	66.6	66.8	65.7	229.40	30.23	6934.76
2006/11/16	13:45:00	1213.5	922.6	270.4	291.4	250.9	251.0	543.4	1180.1	254.0	250.5	222.7	244.8	65.2	67.3	66.3	66.0	230.00	30.27	6962.10
2006/11/16	13:46:00	1213.6	921.9	270.5	291.5	250.9	251.0	543.3	1181.1	254.1	250.4	222.7	244.8	64.8	65.9	66.3	66.1	229.50	30.23	6940.08
2006/11/16	13:47:00	1214.1	922.0	270.4	291.4	250.5	251.2	541.7	1188.2	253.3	250.2	222.8	244.8	65.5	64.8	66.6	65.7	230.00	30.23	6958.95
2006/11/16	13:48:00	1214.4	922.6	270.3	290.4	250.4	251.2	543.0	1196.3	253.6	249.7	222.7	244.7	65.1	65.8	66.6	65.4	228.90	30.17	6905.91
2006/11/16	13:49:00	1214.2	922.1	270.4	292.0	251.4	251.0	542.4	1188.9	254.4	250.5	222.6	244.8	65.6	65.5	66.8	65.9	229.20	30.20	6921.84
2006/11/16	13:50:00	1214.1	924.9	270.5	291.7	251.2	250.7	542.9	1222.4	254.0	250.5	222.6	244.8	65.3	66.1	67.1	66.1	229.90	30.23	6954.47
2006/11/16	13:51:00	1214.4	920.9	270.5	291.4	250.7	251.2	543.7	1214.7	253.8	250.7	222.6	244.9	66.3	66.2	67.3	66.1	229.30	30.14	6927.15
2006/11/16	13:52:00	1214.0	920.9	270.5	291.2	250.5	251.2	541.7	1203.8	253.9	250.8	222.9	244.9	66.6	66.0	67.1	66.4	229.70	30.26	6950.72
2006/11/16	13:53:00	1214.0	921.4	270.6	291.2	251.4	251.2	542.0	1210.1	254.2	250.5	222.8	244.9	66.8	67.2	67.5	67.3	229.80	30.26	6953.75
2006/11/16	13:54:00	1214.4	920.1	270.7	291.9	252.2	251.2	543.7	1204.6	254.9	250.9	222.7	245.0	67.0	67.3	67.3	67.6	229.10	30.18	6914.24
2006/11/16	13:55:00	1214.5	921.5	270.9	291.5	251.6	251.2	541.9	1206.4	254.5	251.4	222.8	245.1	67.3	67.2	67.2	67.7	229.70	30.20	6939.24
2006/11/16	13:56:00	1215.1	921.6	270.9	291.7	250.9	251.3	541.9	1214.6	254.8	251.3	222.9	245.1	67.6	66.8	67.7	67.6	229.40	30.20	6927.88
2006/11/16	13:57:00	1214.8	922.4	270.9	292.0	251.2	251.0	544.0	1224.4	254.4	251.5	222.9	245.1	66.4	67.1	67.5	67.1	229.40	30.22	6932.47
2006/11/16	13:58:00	1214.5	920.5	271.0	292.2	251.9	251.4	543.2	1198.0	254.7	251.2	222.9	245.1	66.3	67.8	67.7	67.1	230.00	30.21	6957.36
2006/11/16	13:59:00	1214.7	921.8	270.9	291.8	252.1	250.4	543.0	1173.8	254.4	251.2	222.9	245.1	66.2	67.3	66.6	66.6	229.20	30.19	6919.55
2006/11/16	14:00:00	1214.4	919.7	270.8	291.7	251.5	250.9	541.4	1231.3	254.7	251.2	222.9	245.2	66.2	68.1	66.8	67.6	229.80	30.25	6951.45
2006/11/16	14:01:00	1215.4	921.3	270.8	291.8	250.7	251.4	542.0	1195.6	255.3	251.0	222.9	245.2	66.6	66.6	67.1	67.6	229.50	30.23	6937.79
2006/11/16	14:02:00	1214.5	924.1	271.0	292.9	251.8	251.3	542.8	1214.6	254.9	251.4	222.9	245.2	65.5	67.5	67.3	67.5	229.50	30.22	6935.49
2006/11/16	14:03:00	1214.3	922.3	270.9	291.7	251.5	251.3	544.1	1212.0	255.3	251.4	222.9	245.2	66.8	68.0	67.6	67.3	229.70	30.24	6946.13
2006/11/16	14:04:00	1214.4	922.4	271.0	292.2	251.2	251.4	543.0	1203.0	254.3	251.4	223.0	245.2	66.2	67.3	67.2	65.9	228.60	30.15	6892.29
2006/11/16	14:05:00	1214.3	920.6	270.7	292.3	250.2	251.2	542.4	1196.2	255.1	251.3	223.0	245.2	65.9	67.2	67.0	66.1	228.50	30.14	6886.99
2006/11/16	14:06:00	1215.1	917.9	270.9	291.4	250.4	251.3	541.6	1219.1	255.2	251.3	222.8	245.2	66.3	66.3	67.3	66.6	229.80	30.24	6949.15
2006/11/16	14:07:00	1214.9	919.4	270.8	291.5	251.2	251.2	544.3	1204.1	254.9	251.6	223.0	245.2	66.3	66.8	67.3	67.2	230.00	30.24	6958.22
2006/11/16	14:08:00	1214.9	921.0	270.9	291.4	251.8	251.2	542.2	1213.8	254.7	251.3	222.9	245.2	65.6	67.3	67.0	67.1	229.50	30.23	6937.79
2006/11/16	14:09:00	1214.4	922.4	270.9	291.7	250.8	251.0	542.2	1213.2	254.5	251.2	222.9	245.2	66.4	67.3	67.3	66.4	229.50	30.22	6935.49
2006/11/16	14:10:00	1214.6	921.7	271.0	292.0	251.0	251.3	542.4	1230.0	255.2	251.5	223.1	245.2	65.7	67.3	67.2	67.0	228.80	30.16	6900.61
2006/11/16	14:11:00	1214.3	921.0	270.9	290.6	250.9	251.2	543.7	1217.3	254.3	251.5	223.1	245.2	66.8	67.3	66.8	67.3	230.00	30.29	6969.00
2006/11/16	14:12:00	1214.5	920.5	270.9	290.4	251.6	251.5	541.3	1246.0	254.3	251.2	223.1	245.2	66.2	65.5	68.0	66.4	229.50	30.23	6937.79
2006/11/16	14:13:00	1214.4	921.9	270.9	292.0	251.6	251.2	543.7	1214.6	253.9	250.9	223.3	245.2	66.1	64.8	66.8	65.9	228.30	30.11	6874.11
2006/11/16	14:14:00	1213.6	921.4	271.0	291.2	251.0	251.2	543.9	1224.1	254.2	251.0	223.2	245.2	66.4	65.5	66.3	65.9	229.70	30.23	6943.83
2006/11/16	14:15:00	1214.5	921.1	270.9	291.2	251.5	251.2	543.2	1228.1	253.9	250.7	223.2	245.2	66.8	65.9	67.3	65.7	229.70	30.23	6943.83
2006/11/16	14:16:00	1214.4	919.4	270.9	290.7	251.6	251.2	541.6	1240.6	254.5	250.4	223.0	245.0	66.8	65.7	67.1	65.5	229.20	30.18	6917.26
2006/11/16	14:17:00	1215.4	920.0	270.6	291.7	251.2	250.8	543.7	1239.6	253.9	250.2	223.1	244.9	66.0	65.7	67.3	65.2	228.60	29.96	6848.86
2006/11/16	14:18:00	1215.5	921.1	270.8	291.2	251.2	251.2	541.7	1224.1	253.4	250.2	223.2	245.0	66.2	64.8	67.3	65.3	229.40	30.16	6927.88
2006/11/16	14:19:00	1214.4	922.3	270.8	290.2	251.0	251.2	542.4	1245.2	254.5	250.2	223.1	245.0	66.4	65.4	67.1	65.6	228.80	30.14	6896.03
2006/11/16	14:20:00	1213.9	921.2	270.8	290.7	251.4	251.4	543.4	1245.1	254.2	250.2	223.2	245.0	66.4	65.2	67.0	64.6	229.70	30.27	6957.61
2006/11/16	14:21:00	1212.6	921.6	270.7	290.6	250.9	250.9	541.7	1241.1	254.3	250.5	223.2	245.0	65.8	65.2	65.7	64.6	229.70	30.27	6953.02

Heat Rise Test
1st Run

Date	Time	TC1	TC2	TC3	TC4	TC5	TC6	TC7	TC8	TC9	TC10	TC11	TC12	TC13	TC14	TC15	TC16	VDC	Amps	Watts
2006/11/16	14:22:00	1213.4	924.0	270.7	291.8	251.2	251.3	542.8	1257.2	254.3	250.7	223.1	245.1	65.6	65.6	65.9	64.8	230.00	30.28	6964.40
2006/11/16	14:23:00	1214.5	918.3	270.7	291.5	250.4	251.2	541.6	1257.3	254.5	250.8	223.1	245.1	65.6	65.7	66.6	65.3	229.70	30.11	6916.27
2006/11/16	14:24:00	1214.8	918.2	271.0	291.7	250.5	251.2	542.9	1243.3	254.5	250.8	223.2	245.1	65.3	66.0	66.8	65.4	229.80	30.24	6951.45
2006/11/16	14:25:00	1214.4	920.4	271.0	291.5	251.0	251.4	542.0	1231.3	255.1	250.9	223.0	245.2	66.6	67.3	66.8	66.8	229.90	30.27	6961.37
2006/11/16	14:26:00	1214.8	920.9	271.1	291.4	251.8	251.4	544.1	1234.7	255.4	251.5	223.0	245.2	66.6	67.7	67.9	67.3	229.80	30.12	6924.59
2006/11/16	14:27:00	1214.7	921.5	271.0	291.7	251.3	251.2	543.5	1262.4	254.7	251.4	222.9	245.3	67.3	67.2	67.6	67.2	227.60	30.13	6857.59
2006/11/16	14:28:00	1215.0	919.9	271.2	291.9	250.5	251.5	541.7	1247.4	255.3	251.3	223.0	245.4	67.1	67.7	67.7	67.8	229.50	30.21	6936.22
2006/11/16	14:29:00	1214.8	922.1	271.3	291.2	251.4	251.5	542.2	1236.7	254.3	251.5	223.1	245.4	67.3	67.5	67.8	67.6	229.20	30.15	6910.38
2006/11/16	14:30:00	1216.5	923.4	271.3	291.7	251.9	251.7	541.9	1261.3	255.1	251.6	223.3	245.4	67.0	66.6	68.6	67.3	229.70	30.24	6946.13
2006/11/16	14:31:00	1215.8	921.7	271.4	291.9	251.2	251.8	541.9	1240.3	255.3	251.8	223.3	245.4	67.2	68.0	68.0	67.9	229.70	30.24	6946.13
2006/11/16	14:32:00	1214.8	922.7	271.2	291.7	251.3	251.9	542.9	1236.6	255.4	252.0	223.3	245.5	67.5	67.5	68.2	68.1	229.30	30.19	6922.57
2006/11/16	14:33:00	1214.4	923.1	271.3	292.2	251.0	251.6	542.5	1252.3	254.9	251.9	223.4	245.5	67.5	66.6	68.2	67.7	229.80	29.91	6891.26
2006/11/16	14:34:00	1214.2	921.4	271.4	292.2	251.7	251.5	543.6	1265.0	255.1	251.7	223.4	245.4	67.2	67.3	68.8	68.0	229.30	30.17	6925.59
2006/11/16	14:35:00	1214.7	920.8	271.4	291.4	251.6	252.0	544.2	1249.9	255.9	251.8	223.2	245.5	67.1	67.7	68.8	68.3	229.80	30.24	6951.45
2006/11/16	14:36:00	1213.9	920.8	271.5	292.0	252.1	251.4	543.5	1245.1	255.4	251.8	223.4	245.6	67.3	67.8	68.6	67.7	229.10	30.17	6911.95
2006/11/16	14:37:00	1214.6	922.4	271.4	291.9	251.5	252.0	543.2	1266.8	254.9	251.6	223.4	245.6	67.2	67.3	68.6	67.3	229.80	30.28	6958.34
2006/11/16	14:38:00	1214.2	921.5	271.5	292.4	251.7	251.8	541.7	1268.3	256.1	252.2	223.4	245.6	68.3	67.8	67.9	68.1	229.00	30.17	6908.93
2006/11/16	14:39:00	1214.5	921.8	271.5	292.0	252.2	251.9	543.4	1259.6	256.1	252.6	223.2	245.6	67.9	68.3	68.6	67.8	229.90	30.26	6956.77
2006/11/16	14:40:00	1214.4	921.8	271.6	293.0	252.7	252.1	542.0	1271.1	255.4	252.2	223.3	245.6	67.7	67.3	68.6	67.8	229.10	30.19	6916.53
2006/11/16	14:41:00	1214.2	922.9	271.5	292.2	252.3	252.1	544.1	1262.5	255.2	252.5	223.4	245.7	67.2	67.5	68.2	67.8	229.90	30.27	6959.07
2006/11/16	14:42:00	1213.9	921.1	271.5	292.6	251.7	251.7	544.7	1256.2	255.3	252.3	223.6	245.6	66.8	67.9	67.9	67.9	230.00	30.25	6966.70
2006/11/16	14:43:00	1214.0	921.5	271.6	291.7	252.1	251.9	542.7	1235.5	255.7	252.4	223.4	245.6	67.5	67.8	69.0	68.2	230.10	30.27	6965.13
2006/11/16	14:44:00	1214.6	920.1	271.6	292.3	252.0	252.2	544.3	1241.3	255.7	252.4	223.4	245.7	67.7	67.5	69.0	68.6	229.70	30.24	6948.43
2006/11/16	14:45:00	1214.6	920.9	271.7	291.9	251.8	251.7	543.3	1278.8	255.7	252.5	223.5	245.7	66.8	67.3	68.1	68.2	229.90	30.28	6961.37
2006/11/16	14:46:00	1214.9	920.6	271.6	293.0	251.7	252.1	543.0	1283.2	256.2	252.7	223.6	245.7	67.5	67.9	68.3	68.3	229.00	30.19	6913.51
2006/11/16	14:47:00	1215.0	919.4	271.5	292.6	252.5	251.8	543.7	1276.8	255.7	252.3	223.6	245.8	67.8	67.6	68.4	68.2	229.90	30.28	6964.40
2006/11/16	14:48:00	1214.7	918.9	271.7	292.6	252.4	251.8	542.5	1259.5	255.4	252.3	223.7	245.8	67.0	67.3	68.8	68.4	229.50	30.21	6933.20
2006/11/16	14:49:00	1214.6	921.9	271.7	292.0	252.6	251.9	543.4	1170.9	255.4	252.5	223.6	245.7	67.5	67.8	68.8	67.7	229.70	30.27	6953.02
2006/11/16	14:50:00	1215.6	923.1	271.7	292.0	251.9	252.1	544.3	1179.4	256.2	252.8	223.7	245.8	67.7	67.9	69.0	68.0	229.90	30.27	6959.07
2006/11/16	14:51:00	1215.1	922.1	271.8	292.0	252.9	252.4	543.9	1179.2	256.2	252.9	223.7	245.9	68.2	68.3	69.0	68.2	229.70	30.24	6948.43
2006/11/16	14:52:00	1215.1	917.8	271.8	292.6	252.0	252.4	542.8	1154.7	256.2	252.7	223.7	245.9	68.6	68.2	69.0	68.3	229.10	30.20	6918.82
2006/11/16	14:53:00	1214.2	922.1	271.7	292.8	252.0	252.2	544.3	1197.2	255.6	253.0	223.7	245.8	68.2	68.2	69.1	68.0	229.90	30.27	6962.10
2006/11/16	14:54:00	1214.2	918.6	271.9	293.2	252.4	252.3	543.1	1184.4	255.9	253.0	223.5	245.8	67.8	68.3	69.3	68.8	230.20	30.26	6968.88
2006/11/16	14:55:00	1214.8	917.8	271.7	291.9	252.9	252.0	544.1	1189.4	255.7	252.6	223.6	245.8	68.0	67.8	68.6	68.3	229.80	30.24	6958.22
2006/11/16	14:56:00	1215.4	921.4	271.6	292.3	252.5	251.5	544.4	1178.8	255.6	253.0	223.6	245.8	67.8	68.0	68.6	67.9	229.80	30.28	6958.34
2006/11/16	14:57:00	1214.6	922.6	271.8	292.3	251.8	252.0	543.4	1188.9	255.7	253.0	223.7	245.8	67.5	68.3	68.1	67.9	229.90	30.27	6963.67
2006/11/16	14:58:00	1214.6	920.0	271.9	292.3	251.7	252.1	543.4	1186.2	256.1	253.1	223.7	245.9	68.1	68.0	69.1	68.4	229.40	30.21	6930.17
2006/11/16	14:59:00	1214.4	919.7	271.9	293.3	252.0	252.1	545.4	1199.5	256.4	253.2	223.8	245.9	67.6	69.0	69.6	68.3	230.10	30.26	6965.85
2006/11/16	15:00:00	1213.1	922.4	272.0	292.4	252.2	252.1	544.9	1177.9	255.7	253.1	223.8	245.9	67.6	68.8	68.8	68.2	230.00	30.27	6964.40
2006/11/16	15:01:00	1215.2	920.2	271.9	292.0	252.2	251.5	542.5	1192.9	255.7	253.0	223.8	245.9	67.3	67.8	68.4	67.9	229.40	30.26	6941.64
2006/11/16	15:02:00	1214.3	921.1	271.6	292.3	252.8	252.1	545.2	1205.6	255.9	252.9	223.6	245.9	68.4	68.1	68.3	68.6	229.80	30.23	6949.88
2006/11/16	15:03:00	1215.4	920.1	271.7	292.0	252.1	251.8	542.5	1194.9	256.2	253.0	223.7	245.9	67.6	68.4	67.8	68.6	229.50	30.24	6940.08
2006/11/16	15:04:00	1215.0	920.9	271.9	292.6	252.3	252.1	543.8	1187.9	255.9	253.1	223.7	245.9	68.0	68.0	69.1	69.1	229.80	30.27	6965.24
2006/11/16	15:05:00	1214.4	922.1	271.7	292.3	252.3	252.0	543.3	1190.4	255.7	253.1	223.7	245.9	68.2	68.0	68.6	68.1	230.10	30.19	6949.74
2006/11/16	15:06:00	1215.4	920.2	271.8	292.0	253.0	252.1	543.0	1176.9	256.1	252.9	223.8	246.0	68.0	67.7	68.4	68.6	230.10	30.27	6969.73
2006/11/16	15:07:00	1215.0	918.8	271.8	291.9	252.5	252.1	542.4	1225.5	256.2	253.0	223.7	246.0	67.7	68.8	68.2	68.0	230.20	30.28	6970.46
2006/11/16	15:08:00	1215.1	920.7	271.9	292.2	252.2	251.5	542.7	1215.1	256.4	253.1	223.7	246.0	67.5	68.0	68.0	68.6	229.80	30.25	6951.45
2006/11/16	15:09:00	1215.0	922.9	271.9	291.0	252.6	251.9	544.9	1161.7	256.7	253.1	223.7	246.0	68.0	68.2	67.9	68.2	229.70	30.20	6936.94
2006/11/16	15:10:00	1213.7	922.4	271.9	292.5	252.6	251.9	543.2	1120.0	256.4	253.0	223.7	246.0	68.0	67.9	69.1	68.6	229.70	30.23	6957.61
2006/11/16	15:11:00	1214.7	920.2	271.9	292.0	251.8	252.2	544.8	1152.2	256.2	253.2	223.6	246.0	68.0	67.9	68.8	68.0	229.70	30.27	6959.91
2006/11/16	15:12:00	1214.7	922.6	271.8	292.3	252.1	252.2	543.6	1154.4	255.9	253.1	223.9	246.0	67.9	67.9	69.5	68.2	230.10	30.28	6967.43
2006/11/16	15:13:00	1213.6	922.0	271.9	292.7	251.8	252.4	543.6	1152.4	256.2	253.0	223.8	246.0	68.1	68.3	69.6	68.0	229.70	30.24	6946.13
2006/11/16	15:14:00	1213.2	921.8	272.0	292.6	252.9	252.3	543.6	1164.2	256.2	253.4	223.7	246.0	68.1	68.4	68.8	68.0	229.30	30.21	6927.15
2006/11/16	15:15:00	1212.3	922.1	271.8	293.1	252.5	252.2	543.2	1146.4	256.4	253.2	223.7	246.1	67.7	67.9	68.6	68.4	229.90	30.28	6963.67
2006/11/16	15:16:00	1213.0	921.2	272.0	292.3	252.2	252.3	542.4	1135.4	256.2	253.3	223.8	246.1	68.2	67.7	69.5	68.2	229.80	30.24	6949.15
2006/11/16	15:17:00	1213.8	920.8	272.0	292.5	252.2	252.6	544.9	1117.8	256.2	253.1	224.0	246.1	68.8	68.0	69.6	68.1	229.60	30.16	6924.74

Heat Rise Test
1st Run

Date	Time	TC1	TC2	TC3	TC4	TC5	TC6	TC7	TC8	TC9	TC10	TC11	TC12	TC13	TC14	TC15	TC16	VDC	Amps	Watts
2006/11/16	15:18:00	1214.2	923.1	271.9	293.4	252.7	251.8	543.6	1106.7	256.2	253.2	223.9	246.1	68.4	69.0	69.1	67.8	228.60	30.14	6890.00
2006/11/16	15:19:00	1215.2	920.4	271.9	292.7	252.6	252.3	543.3	1137.9	256.5	253.5	223.8	246.1	67.6	68.6	69.0	67.8	229.70	30.06	6925.82
2006/11/16	15:20:00	1215.1	917.2	271.9	292.0	252.5	252.2	542.7	1127.9	255.9	253.4	223.9	246.2	69.0	68.4	69.3	68.1	229.00	30.16	6906.64
2006/11/16	15:21:00	1215.0	921.3	271.9	293.2	253.2	252.6	544.3	1155.2	255.9	253.4	223.9	246.2	68.6	68.8	68.6	67.9	229.10	30.18	6928.72
2006/11/16	15:22:00	1213.3	921.9	272.0	293.2	252.3	252.5	543.3	1083.2	256.4	253.8	223.9	246.2	68.8	68.4	70.0	68.3	229.90	30.25	6963.55
2006/11/16	15:23:00	1213.6	921.6	272.0	292.9	252.4	251.9	543.5	1090.3	256.7	253.6	224.0	246.2	67.0	67.7	69.1	68.6	223.40	29.71	6637.21
2006/11/16	15:24:00	1214.0	920.9	272.0	293.1	251.4	251.8	544.1	1081.0	256.7	253.3	223.9	246.2	66.0	67.6	68.8	68.1	229.50	30.23	6937.79
2006/11/16	15:25:00	1214.4	920.9	272.0	292.2	251.0	252.1	544.0	1086.4	256.4	253.3	223.8	246.2	66.8	68.3	68.4	67.3	229.40	30.23	6937.79
2006/11/16	15:26:00	1214.4	921.0	272.0	292.5	251.5	252.4	541.9	1099.0	256.4	253.1	223.8	246.2	67.3	68.4	68.4	67.6	229.70	30.27	6955.32
2006/11/16	15:27:00	1213.8	922.3	271.9	292.8	252.8	252.2	543.3	1146.2	256.4	253.7	223.9	246.2	67.3	68.4	68.6	68.4	229.70	30.24	6953.02
2006/11/16	15:28:00	1213.8	922.9	272.0	292.2	251.8	252.4	544.4	1121.6	256.9	253.7	223.9	246.2	67.7	67.3	69.6	68.6	229.90	30.24	6952.18
2006/11/16	15:29:00	1214.1	922.9	271.9	291.9	252.5	251.9	543.3	1141.4	256.7	253.5	223.9	246.2	68.1	67.7	69.3	68.6	229.60	30.27	6949.99
2006/11/16	15:30:00	1214.3	919.1	272.0	292.7	252.7	251.9	542.4	1133.7	256.7	253.5	223.9	246.2	67.9	67.9	69.5	68.8	229.80	30.25	6956.05
2006/11/16	15:31:00	1214.4	923.2	272.1	292.0	252.8	251.7	544.5	1180.5	256.2	253.7	223.9	246.3	66.8	68.3	68.8	68.0	229.50	30.22	6935.49
2006/11/16	15:32:00	1215.5	918.4	272.1	292.3	252.5	251.8	542.4	1162.1	256.5	253.8	223.8	246.2	67.8	68.8	68.8	68.6	229.90	30.25	6954.47
2006/11/16	15:33:00	1214.2	919.3	272.0	293.2	252.5	252.3	543.0	1170.4	255.9	253.8	223.9	246.2	68.6	68.4	68.8	68.2	230.10	30.28	6967.43
2006/11/16	15:34:00	1213.8	919.1	271.9	293.1	253.0	252.2	543.7	1158.2	256.7	253.4	223.9	246.2	67.7	68.6	68.8	68.0	230.00	30.28	6966.70
2006/11/16	15:35:00	1215.1	920.5	271.9	291.5	252.5	251.9	543.9	1185.9	257.2	253.7	223.7	246.3	68.3	68.8	69.3	68.8	229.60	30.11	6947.70
2006/11/16	15:36:00	1214.1	921.3	272.0	293.7	252.1	251.9	542.9	1111.5	256.2	253.8	223.9	246.3	68.4	68.2	69.5	68.3	228.70	29.82	6819.83
2006/11/16	15:37:00	1213.5	920.1	272.2	293.5	252.6	252.4	543.3	1099.5	256.5	253.6	224.1	246.3	67.6	68.3	69.8	68.4	229.50	30.18	6928.61
2006/11/16	15:38:00	1213.7	921.8	272.2	292.5	251.7	251.9	542.7	1104.0	256.4	253.6	224.2	246.4	67.1	68.2	68.3	68.4	229.50	30.19	6928.61
2006/11/16	15:39:00	1213.7	922.0	272.1	293.3	250.7	251.5	542.4	1130.2	256.2	253.1	224.1	246.4	67.0	68.2	68.1	68.1	229.50	30.21	6942.38
2006/11/16	15:40:00	1214.8	921.9	272.1	291.5	251.6	251.4	543.5	1116.3	256.4	253.3	224.1	246.4	66.2	67.7	67.8	68.1	229.70	29.42	6772.48
2006/11/16	15:41:00	1213.8	922.9	272.3	291.7	251.4	251.8	545.2	1087.8	257.2	253.2	224.2	246.4	67.0	68.1	67.7	68.2	229.20	30.16	6912.67
2006/11/16	15:42:00	1213.5	919.9	272.3	293.6	252.6	251.5	543.8	1092.0	256.9	253.4	224.1	246.5	66.6	68.3	67.9	68.2	230.00	30.22	6958.22
2006/11/16	15:43:00	1214.0	923.8	272.3	293.0	252.6	252.5	543.2	1093.4	256.4	253.2	224.2	246.5	68.1	67.8	68.3	68.3	229.20	30.21	6924.13
2006/11/16	15:44:00	1214.4	922.4	272.1	292.6	252.1	251.9	543.4	1102.0	255.9	253.5	224.2	246.4	67.8	67.7	68.3	67.8	229.20	30.21	6924.13
2006/11/16	15:45:00	1214.0	920.9	272.3	293.5	252.7	252.2	544.4	1094.4	256.9	253.7	224.2	246.4	67.8	68.8	68.2	67.8	230.00	30.29	6969.00
2006/11/16	15:46:00	1214.1	923.9	272.2	292.7	252.5	252.0	544.2	1088.1	256.4	253.4	224.3	246.4	68.2	68.6	68.6	68.6	229.30	30.17	6917.98
2006/11/16	15:47:00	1213.1	920.0	272.3	292.8	252.9	251.7	542.2	1079.9	256.7	253.6	224.1	246.4	68.8	67.9	68.6	68.2	229.80	30.23	6949.15
2006/11/16	15:48:00	1214.5	918.8	272.4	292.2	252.6	252.6	543.1	1174.9	256.9	253.7	224.2	246.4	68.8	68.2	69.3	68.2	229.30	30.20	6939.96
2006/11/16	15:49:00	1214.4	919.9	272.4	292.5	252.1	252.6	543.6	1167.8	256.9	253.7	224.3	246.4	68.3	67.2	68.6	69.0	229.60	30.19	6933.92
2006/11/16	15:50:00	1214.8	922.6	272.3	293.5	252.4	252.2	545.1	1166.9	256.5	253.7	224.2	246.4	68.6	67.0	68.1	68.6	229.70	30.26	6959.80
2006/11/16	15:51:00	1214.0	922.1	272.3	292.9	251.7	252.5	543.5	1058.0	256.1	253.9	224.3	246.5	70.2	66.8	68.3	67.7	229.60	30.23	6943.83
2006/11/16	15:52:00	1213.9	920.2	272.0	292.2	252.6	252.3	543.8	1051.1	256.4	253.7	224.5	246.5	69.3	67.9	68.8	67.8	229.40	30.19	6925.59
2006/11/16	15:53:00	1213.1	922.0	272.3	292.9	252.0	252.5	544.5	1098.0	257.2	253.7	224.3	246.4	70.0	67.7	68.6	68.6	229.90	30.26	6959.80
2006/11/16	15:54:00	1214.4	922.9	272.3	291.7	252.7	252.8	542.4	1094.8	257.4	254.0	224.1	246.4	68.8	67.8	68.6	68.4	229.60	30.23	6940.81
2006/11/16	15:55:00	1214.7	920.6	272.3	292.5	252.1	252.5	543.7	1158.7	257.4	254.1	224.2	246.4	67.5	68.3	69.1	68.6	229.30	30.20	6927.15
2006/11/16	15:56:00	1213.7	923.2	272.4	293.4	252.0	252.4	544.5	1140.5	256.9	254.1	224.4	246.4	67.9	68.0	69.3	68.8	229.50	30.23	6937.79
2006/11/16	15:57:00	1213.6	921.1	272.3	292.8	252.3	252.3	542.4	1140.2	256.5	253.8	224.4	246.5	68.4	67.9	69.3	68.8	229.40	30.28	6946.23
2006/11/16	15:58:00	1214.8	920.5	272.4	292.7	252.0	252.8	543.7	1191.7	255.9	253.8	224.2	246.4	69.5	67.2	69.6	68.2	230.10	30.30	6972.03
2006/11/16	15:59:00	1214.7	920.4	272.5	292.3	252.1	252.8	544.0	1207.3	256.4	253.5	224.3	246.4	68.4	67.2	69.5	68.1	229.70	30.23	6943.83
2006/11/16	16:00:00	1214.1	922.0	272.4	292.7	252.5	252.8	544.2	1170.5	256.9	253.7	224.2	246.4	67.6	67.8	69.6	68.2	229.60	30.25	6945.40
2006/11/16	16:01:00	1214.6	923.0	272.4	293.9	252.8	252.5	544.1	1096.5	257.2	254.2	224.2	246.4	67.5	69.1	68.8	68.2	230.10	30.29	6969.73
2006/11/16	16:02:00	1214.5	923.4	272.4	292.6	253.2	252.6	543.6	1099.2	256.7	254.0	224.3	246.4	68.1	68.1	68.8	68.2	230.20	30.29	6977.36
2006/11/16	16:03:00	1214.4	918.5	272.3	293.1	252.1	252.5	542.7	1221.9	256.4	253.8	224.3	246.5	68.0	67.3	69.6	68.3	230.20	30.29	6972.76
2006/11/16	16:04:00	1214.5	922.0	272.3	292.5	252.4	252.4	543.5	1248.9	257.2	254.0	224.1	246.5	67.0	67.3	68.6	68.6	230.20	30.28	6973.48
2006/11/16	16:05:00	1216.1	920.9	272.6	293.2	252.4	252.9	542.7	1023.0	256.9	253.8	224.2	246.6	67.3	68.3	68.8	68.0	230.10	30.28	6967.43
2006/11/16	16:06:00	1215.4	919.9	272.6	293.0	252.6	252.4	542.4	1257.7	257.2	254.5	224.3	246.5	67.6	67.8	69.5	68.8	229.60	30.23	6940.81
2006/11/16	16:07:00	1214.7	920.4	272.4	293.4	253.2	252.6	544.3	1261.3	256.7	254.2	224.4	246.5	67.8	67.8	69.3	67.9	230.10	30.28	6967.43
2006/11/16	16:08:00	1214.1	921.1	272.6	293.2	253.3	252.7	542.8	1258.4	257.4	254.3	224.3	246.5	68.0	68.2	69.9	68.3	230.20	30.30	6977.36
2006/11/16	16:09:00	1214.4	921.7	272.3	292.2	253.7	253.0	543.7	1261.3	257.4	254.2	224.3	246.5	68.3	68.2	69.7	68.4	230.10	30.27	6969.73
2006/11/16	16:10:00	1214.6	921.2	272.5	292.3	253.6	252.9	543.3	1109.0	257.4	254.5	224.5	246.5	67.8	68.8	70.1	69.1	230.10	30.29	6969.73
2006/11/16	16:11:00	1214.4	921.3	272.5	291.8	252.5	253.0	543.7	1106.5	256.4	254.1	224.4	246.5	67.9	68.3	69.8	68.1	230.20	30.29	6975.06
2006/11/16	16:12:00	1213.8	920.6	272.5	293.3	253.5	252.8	544.1	1104.3	256.7	253.8	224.5	246.5	68.4	68.6	69.7	68.2	229.30	30.19	6922.57
2006/11/16	16:13:00	1214.9	920.0	272.5	293.1	253.4	253.2	543.2	1291.5	256.7	253.8	224.3	246.5	68.0	69.3	69.1	68.4	230.00	30.29	6969.00

Heat Rise Test
1st Run

Date	Time	TC1	TC2	TC3	TC4	TC5	TC6	TC7	TC8	TC9	TC10	TC11	TC12	TC13	TC14	TC15	TC16	VDC	Amps	Watts
2006/11/16	16:14:00	1214.4	920.5	272.5	292.4	253.0	252.6	543.7	1270.3	256.5	254.5	224.3	246.5	67.2	68.6	68.8	68.8	230.00	30.20	6949.02
2006/11/16	16:15:00	1216.6	918.8	272.5	292.5	252.5	253.0	543.7	1171.5	256.9	254.1	224.4	246.5	67.3	68.4	69.9	68.4	229.80	30.21	6942.26
2006/11/16	16:16:00	1215.1	920.5	272.4	293.3	251.8	252.8	543.9	1203.8	257.2	254.2	224.5	246.5	67.2	68.6	69.6	68.4	230.00	30.29	6966.70
2006/11/16	16:17:00	1215.2	920.1	272.4	291.2	252.4	252.9	543.6	1276.8	256.7	254.0	224.4	246.6	67.3	68.0	69.5	68.6	229.90	30.19	6952.76
2006/11/16	16:18:00	1215.9	920.0	272.6	291.9	252.9	252.8	542.5	1272.7	257.4	254.1	224.4	246.6	68.0	68.6	69.7	68.6	229.50	30.23	6940.08
2006/11/16	16:19:00	1215.5	921.4	272.7	292.9	251.4	252.5	544.4	1294.7	257.7	253.8	224.4	246.6	68.8	69.5	69.3	68.6	229.90	30.26	6959.80
2006/11/16	16:20:00	1213.8	922.0	272.5	292.8	251.8	252.5	544.9	1281.1	257.0	254.2	224.5	246.7	68.3	67.8	69.0	68.2	229.50	30.18	6926.31
2006/11/16	16:21:00	1213.8	918.7	272.7	293.1	252.0	252.7	544.7	1048.0	257.4	254.3	224.3	246.7	67.5	68.6	69.1	68.6	229.50	30.18	6935.36
2006/11/16	16:22:00	1215.1	922.1	272.6	292.8	252.0	253.0	543.5	1111.2	257.5	254.5	224.4	246.7	68.6	69.3	69.1	69.1	229.70	30.23	6943.83
2006/11/16	16:23:00	1215.8	919.3	272.6	293.4	253.6	252.7	543.6	1273.1	257.4	254.5	224.4	246.7	69.0	68.6	70.0	69.0	229.60	30.23	6940.81
2006/11/16	16:24:00	1215.2	922.7	272.6	292.7	253.0	252.0	543.8	1278.8	257.5	254.5	224.4	246.8	68.8	68.8	69.3	69.3	230.00	30.27	6962.10
2006/11/16	16:25:00	1214.6	923.1	272.9	292.7	254.1	252.6	544.3	1254.2	257.5	254.7	224.5	246.7	68.8	69.1	70.1	69.8	229.40	30.21	6930.17
2006/11/16	16:26:00	1214.5	919.4	272.8	292.7	253.7	252.7	543.1	1270.7	257.5	254.9	224.3	246.8	68.3	69.0	69.9	69.5	229.80	30.26	6953.75
2006/11/16	16:27:00	1213.9	919.7	272.7	293.5	253.5	253.0	544.3	1135.1	257.7	254.7	224.3	246.8	68.4	69.0	70.2	69.1	229.20	30.16	6912.67
2006/11/16	16:28:00	1214.9	923.0	272.9	291.9	252.8	252.8	542.7	1220.1	257.4	255.1	224.6	246.8	67.9	68.8	69.8	69.3	230.10	30.18	6944.42
2006/11/16	16:29:00	1215.4	921.0	272.8	292.6	253.1	252.8	542.9	1210.1	257.5	255.1	224.4	246.7	68.4	68.6	69.3	69.1	229.90	30.27	6961.37
2006/11/16	16:30:00	1215.9	921.9	272.6	292.7	253.0	252.1	543.5	1235.8	257.5	254.7	224.4	246.7	68.6	69.3	69.1	69.3	229.80	30.23	6958.95
2006/11/16	16:31:00	1213.9	920.4	272.5	293.4	252.9	253.0	544.3	1138.7	257.4	254.6	224.3	246.6	67.9	69.5	69.1	68.6	229.80	30.23	6952.90
2006/11/16	16:32:00	1213.7	920.0	272.6	293.4	252.5	252.7	544.8	1064.0	256.7	254.4	224.4	246.7	68.8	69.1	69.1	68.4	229.70	30.23	6943.83
2006/11/16	16:33:00	1214.2	920.4	272.5	293.0	253.0	252.7	543.7	1066.7	257.0	254.7	224.4	246.7	68.6	68.6	69.1	68.4	229.20	30.23	6928.72
2006/11/16	16:34:00	1214.0	920.9	272.5	293.1	253.1	252.5	545.4	1237.6	257.2	254.8	224.4	246.6	67.8	68.8	69.1	68.8	229.70	30.26	6953.02
2006/11/16	16:35:00	1214.0	921.7	272.7	292.4	253.2	252.7	543.7	1196.7	257.7	254.7	224.4	246.7	67.8	68.6	69.3	69.1	229.80	30.25	6953.75
2006/11/16	16:36:00	1213.9	921.5	272.8	292.9	253.0	252.8	544.7	1266.1	257.7	254.9	224.4	246.8	68.6	69.6	70.1	69.3	229.00	30.14	6902.06
2006/11/16	16:37:00	1214.5	920.1	272.7	293.2	253.5	253.1	543.7	1253.7	257.4	254.9	224.5	246.8	68.8	69.7	70.1	69.1	229.90	30.25	6957.50
2006/11/16	16:38:00	1214.0	922.9	273.0	292.5	253.3	253.2	544.5	1257.9	257.7	254.9	224.4	246.9	69.8	68.8	69.9	69.1	229.70	30.21	6950.72
2006/11/16	16:39:00	1213.8	920.1	272.8	292.8	253.8	253.4	543.4	1260.5	257.2	255.3	224.5	247.0	68.3	68.8	69.7	69.1	229.90	30.25	6954.47
2006/11/16	16:40:00	1215.4	920.0	272.8	293.0	253.8	253.2	543.2	1250.0	258.4	255.2	224.6	247.0	68.6	69.1	69.7	69.5	230.10	30.29	6969.73
2006/11/16	16:41:00	1214.9	920.8	273.0	293.4	253.7	252.5	542.7	1249.9	258.3	254.9	224.4	247.0	69.8	69.5	69.8	69.5	229.60	30.24	6943.10
2006/11/16	16:42:00	1214.4	920.6	273.1	292.8	253.6	253.0	544.0	1242.4	258.0	255.3	224.7	247.0	69.9	68.6	70.1	69.6	230.10	30.30	6974.33
2006/11/16	16:43:00	1213.9	922.9	273.1	293.5	253.1	253.0	542.4	1257.6	258.0	255.1	224.7	247.0	68.3	69.5	70.2	68.8	230.10	30.28	6967.43
2006/11/16	16:44:00	1215.0	923.7	273.0	292.8	253.0	253.3	544.1	1023.0	257.7	255.2	224.6	247.0	68.6	69.7	69.5	69.5	229.00	30.17	6908.93
2006/11/16	16:45:00	1215.0	923.5	273.0	292.5	254.2	253.6	545.4	1176.9	258.3	255.3	224.7	247.1	69.3	69.8	70.0	70.1	229.20	30.17	6914.96
2006/11/16	16:46:00	1214.0	921.8	272.9	294.0	252.9	253.3	544.3	1196.6	257.9	255.4	224.7	247.1	69.0	69.9	69.6	69.0	229.30	30.22	6929.45
2006/11/16	16:47:00	1213.8	921.6	273.1	293.3	253.4	253.1	544.9	1008.5	258.2	255.6	224.7	247.1	69.1	69.5	69.9	69.8	229.30	30.14	6926.17
2006/11/16	16:48:00	1213.6	923.2	273.1	293.4	253.6	253.1	543.5	1033.9	257.4	255.4	224.9	247.2	69.1	69.9	69.0	69.3	229.20	30.20	6921.84
2006/11/16	16:49:00	1214.4	922.1	273.1	293.2	253.6	252.9	543.3	1195.0	257.7	255.3	224.7	247.2	69.1	70.1	69.1	69.3	230.20	30.29	6975.79
2006/11/16	16:50:00	1214.6	919.9	273.0	292.7	254.4	253.0	543.0	1210.2	257.8	255.2	224.8	247.2	68.8	69.0	70.0	69.7	229.50	30.26	6944.67
2006/11/16	16:51:00	1215.6	920.9	273.2	293.5	254.0	253.4	542.7	1190.0	258.3	255.2	224.8	247.2	69.7	69.3	70.3	69.6	228.90	30.15	6901.34
2006/11/16	16:52:00	1214.3	921.6	273.1	292.7	253.5	253.5	542.7	1217.0	258.2	255.4	224.8	247.2	69.6	69.5	70.2	69.6	229.00	30.21	6918.09
2006/11/16	16:53:00	1213.8	918.4	273.2	294.3	253.7	253.4	544.1	1212.6	257.8	255.6	224.7	247.2	69.6	69.5	69.9	69.5	230.10	30.29	6969.73
2006/11/16	16:54:00	1214.5	919.7	273.3	293.5	253.3	252.5	544.3	1200.5	258.4	255.3	224.8	247.2	68.8	69.1	69.3	69.7	229.60	30.24	6943.10
2006/11/16	16:55:00	1215.2	920.4	273.2	293.1	253.3	253.1	545.1	1208.0	258.7	255.3	224.8	247.2	69.1	69.0	70.1	69.7	229.40	30.20	6941.64
2006/11/16	16:56:00	1215.4	922.3	273.2	293.8	253.7	253.5	543.3	1180.6	258.5	256.1	225.0	247.1	69.6	69.7	70.6	69.6	229.60	30.21	6957.36
2006/11/16	16:57:00	1214.4	920.2	273.0	293.6	253.7	253.3	543.8	1204.1	258.4	255.9	224.8	247.1	69.1	69.5	70.2	69.3	230.00	30.21	6948.30
2006/11/16	16:58:00	1214.0	918.6	273.3	293.8	253.1	253.5	545.2	997.1	258.5	255.9	224.6	247.1	69.3	69.1	70.9	69.9	230.10	30.28	6967.43
2006/11/16	16:59:00	1214.6	920.4	273.3	293.0	253.1	253.5	544.3	1002.2	258.4	255.7	224.6	247.1	69.1	70.1	70.1	70.1	230.00	30.28	6964.40
2006/11/16	17:00:00	1213.5	924.3	273.3	293.4	254.0	253.1	545.6	941.5	257.9	255.9	224.9	247.2	69.5	68.8	70.1	69.3	230.20	30.30	6975.06
2006/11/16	17:01:00	1213.7	920.5	273.4	292.8	254.3	253.7	543.5	937.1	257.7	255.4	224.9	247.1	69.3	69.0	70.1	69.3	230.20	30.30	6977.36
2006/11/16	17:02:00	1214.5	922.1	273.2	293.5	254.3	253.5	544.4	1244.6	258.4	255.9	224.8	247.2	68.8	68.8	70.3	69.7	229.80	30.26	6953.75
2006/11/16	17:03:00	1214.6	921.9	273.3	293.4	254.2	253.5	544.8	1249.7	258.5	255.4	224.8	247.2	68.8	70.0	70.1	70.0	230.00	30.25	6957.50
2006/11/16	17:04:00	1214.5	923.9	273.3	293.5	254.9	253.7	545.4	1147.4	258.2	255.7	224.8	247.3	69.7	70.1	70.6	69.9	230.10	30.27	6973.48
2006/11/16	17:05:00	1213.7	924.6	273.4	293.5	254.4	253.5	543.7	1169.5	258.4	255.9	224.9	247.3	69.3	70.1	70.6	69.5	230.10	30.30	6972.03
2006/11/16	17:06:00	1213.8	922.9	273.4	293.3	253.9	253.6	544.2	970.3	258.2	256.1	225.0	247.3	68.6	70.1	70.6	70.0	228.80	30.24	6934.93
2006/11/16	17:07:00	1214.7	921.6	273.3	293.5	253.9	252.9	544.7	1115.7	258.8	256.2	225.0	247.4	69.6	70.3	70.1	69.8	230.00	30.17	6939.10
2006/11/16	17:08:00	1213.8	922.1	273.4	294.4	252.8	253.4	545.1	1162.4	258.6	256.2	224.9	247.4	69.1	70.2	70.2	69.9	229.60	30.24	6943.10
2006/11/16	17:09:00	1214.3	921.5	273.4	294.4	253.7	253.2	545.2	1172.2	258.6	256.1	224.7	247.4	69.1	70.1	70.3	69.3	229.60	30.21	6936.22

Heat Rise Test
1st Run

Date	Time	TC1	TC2	TC3	TC4	TC5	TC6	TC7	TC8	TC9	TC10	TC11	TC12	TC13	TC14	TC15	TC16	VDC	Amps	Watts
2006/11/16	17:10:00	1215.4	921.9	273.4	293.9	254.5	253.4	544.6	1219.1	259.0	256.2	225.0	247.5	69.5	70.6	70.3	69.6	229.00	30.18	6911.22
2006/11/16	17:11:00	1214.4	923.0	273.4	293.9	254.4	253.7	544.3	1213.6	258.8	256.2	225.1	247.5	69.1	70.6	70.9	69.7	229.40	30.23	6934.76
2006/11/16	17:12:00	1215.0	919.3	273.2	294.0	253.8	253.5	543.2	1232.1	258.5	256.2	225.0	247.5	69.3	70.0	70.0	69.9	229.30	30.23	6931.74
2006/11/16	17:13:00	1215.1	920.1	273.4	293.7	253.6	253.3	543.5	1219.5	258.8	255.9	224.9	247.5	68.1	69.3	70.0	69.1	229.90	30.18	6938.38
2006/11/16	17:14:00	1215.4	921.1	273.4	293.0	254.2	253.2	541.9	1251.6	258.6	256.2	224.9	247.4	68.3	68.8	69.7	69.1	229.80	30.22	6949.15
2006/11/16	17:15:00	1214.4	920.9	273.4	294.1	253.9	252.9	543.8	1257.6	258.5	256.1	225.0	247.4	68.8	69.1	69.7	68.8	229.40	30.26	6941.64
2006/11/16	17:16:00	1213.2	920.5	273.4	293.9	252.8	253.2	543.2	1256.4	258.7	256.1	225.0	247.4	69.5	70.0	70.0	69.3	230.00	30.25	6957.50
2006/11/16	17:17:00	1213.9	920.6	273.4	294.6	254.2	253.3	544.0	1269.1	258.5	256.2	225.0	247.4	69.0	69.3	69.9	69.3	230.10	30.30	6972.03
2006/11/16	17:18:00	1214.7	921.1	273.4	293.4	254.0	253.3	543.3	1268.3	257.9	256.4	225.1	247.5	69.1	70.0	70.3	69.0	229.80	30.26	6953.75
2006/11/16	17:19:00	1213.9	921.6	273.4	293.7	254.0	253.4	544.7	1258.0	258.8	256.2	225.1	247.5	69.5	70.2	70.1	69.6	229.70	30.23	6943.83
2006/11/16	17:20:00	1214.3	920.5	273.1	293.7	253.5	252.7	543.9	1262.6	258.9	256.2	225.1	247.5	69.1	70.3	70.0	69.1	229.70	30.10	6913.97
2006/11/16	17:21:00	1214.5	919.4	273.6	293.5	253.8	253.7	545.2	1193.6	258.4	256.2	225.1	247.4	69.1	69.9	70.1	69.8	230.00	30.29	6969.73
2006/11/16	17:22:00	1215.1	920.5	273.6	294.1	254.0	253.6	544.5	1250.6	258.8	256.7	225.2	247.6	69.1	69.8	70.1	69.7	229.90	30.26	6961.37
2006/11/16	17:23:00	1215.4	923.2	273.4	293.9	254.5	253.6	544.6	1231.8	259.0	256.5	225.2	247.5	69.7	70.0	69.8	69.3	230.20	30.30	6978.09
2006/11/16	17:24:00	1214.9	919.3	273.4	294.1	253.9	253.3	544.1	1315.5	258.3	256.2	225.2	247.6	69.0	69.8	69.8	69.6	229.70	30.22	6941.53
2006/11/16	17:25:00	1215.9	922.3	273.4	293.6	253.9	253.7	544.0	1284.3	258.9	255.9	225.2	247.6	68.6	70.3	69.9	69.1	230.20	30.23	6961.97
2006/11/16	17:26:00	1214.8	924.9	273.4	294.4	254.0	253.7	545.1	1289.9	258.7	256.4	225.2	247.5	68.8	69.9	69.5	69.6	229.90	30.26	6961.37
2006/11/16	17:27:00	1214.8	921.0	273.7	293.8	253.5	253.2	543.6	1295.9	258.5	256.4	225.2	247.5	69.1	69.9	70.2	70.0	229.70	30.24	6946.13
2006/11/16	17:28:00	1214.6	919.6	273.4	293.8	253.0	253.6	544.5	1285.2	258.5	256.4	225.0	247.5	69.0	70.0	69.9	69.5	229.70	30.23	6943.83
2006/11/16	17:29:00	1214.5	922.1	273.6	294.2	254.3	253.6	545.4	1277.0	258.4	256.2	225.1	247.5	69.1	69.1	70.2	69.9	229.70	30.23	6943.83
2006/11/16	17:30:00	1214.7	920.5	273.6	294.6	254.1	253.5	543.8	1296.4	258.8	256.2	225.1	247.5	68.6	69.7	70.3	69.7	230.00	30.27	6962.10
2006/11/16	17:31:00	1215.1	922.4	273.6	294.7	253.7	253.5	544.4	1128.1	258.8	256.7	225.2	247.6	68.6	69.6	69.7	69.3	229.70	30.22	6950.60
2006/11/16	17:32:00	1214.0	923.9	273.7	294.1	253.8	254.3	543.7	1254.2	259.3	256.5	225.2	247.6	69.1	69.6	70.0	69.8	229.80	30.28	6958.34
2006/11/16	17:33:00	1214.0	922.0	273.6	294.7	254.5	253.7	543.8	1274.1	259.0	256.7	225.1	247.6	68.8	70.3	69.6	69.6	229.70	30.20	6952.04
2006/11/16	17:34:00	1214.1	919.7	273.7	294.9	254.0	254.0	543.5	1266.8	259.0	256.7	225.2	247.5	69.3	69.7	70.1	70.6	230.00	30.24	6967.30
2006/11/16	17:35:00	1214.3	921.9	273.7	294.4	254.4	253.7	544.6	1145.9	259.4	256.7	225.2	247.6	68.8	70.1	70.6	69.6	229.10	30.16	6909.66
2006/11/16	17:36:00	1215.1	921.8	273.9	292.9	253.7	253.7	545.2	1280.8	259.1	256.9	225.2	247.6	69.3	70.6	70.4	69.7	229.40	30.22	6932.47
2006/11/16	17:37:00	1215.4	919.1	273.7	293.1	254.1	253.9	544.0	1238.7	258.9	256.7	225.2	247.6	70.0	70.2	70.2	70.1	230.00	30.28	6964.40
2006/11/16	17:38:00	1215.1	920.7	273.7	293.5	253.7	253.8	543.0	1288.7	259.3	256.7	225.1	247.6	68.8	70.1	70.4	70.3	230.10	30.30	6974.33
2006/11/16	17:39:00	1214.3	921.3	273.9	294.0	254.3	253.5	544.4	1276.0	259.3	256.5	225.2	247.6	69.3	70.8	70.6	70.0	229.10	30.17	6911.95
2006/11/16	17:40:00	1214.2	921.7	273.7	294.2	254.7	253.6	543.3	1273.5	258.9	256.9	225.4	247.6	69.5	68.8	70.3	70.0	230.20	30.30	6975.06
2006/11/16	17:41:00	1214.3	923.7	273.7	293.8	254.4	253.9	545.2	1269.6	259.3	256.9	225.2	247.6	68.8	69.7	70.6	69.8	230.10	30.28	6967.43
2006/11/16	17:42:00	1214.4	919.0	273.9	293.5	254.2	254.1	543.5	1280.6	259.0	256.7	225.4	247.6	69.1	69.8	70.0	69.7	230.10	30.25	6969.60
2006/11/16	17:43:00	1215.4	921.7	273.7	293.9	253.7	253.8	545.7	1254.3	259.0	257.0	225.5	247.7	69.3	69.7	70.4	69.3	229.80	30.25	6951.45
2006/11/16	17:44:00	1214.5	924.4	273.9	294.1	254.2	253.7	545.7	1278.1	259.3	256.9	225.4	247.7	69.5	69.7	70.2	69.9	229.90	30.24	6956.77
2006/11/16	17:45:00	1214.3	924.5	273.7	293.4	253.7	253.7	545.2	1242.6	258.9	256.9	225.6	247.7	68.8	68.8	70.4	70.0	230.10	30.24	6961.25
2006/11/16	17:46:00	1214.8	921.7	273.9	294.9	254.2	253.5	545.7	1249.1	259.8	256.9	225.6	247.7	68.8	69.9	69.6	69.1	229.00	30.16	6906.64
2006/11/16	17:47:00	1214.5	920.6	273.9	293.6	254.7	253.8	542.9	1264.4	259.1	256.9	225.4	247.7	68.4	69.8	70.0	69.9	229.70	30.23	6949.88
2006/11/16	17:48:00	1213.7	922.3	274.1	294.4	253.8	254.2	545.6	1280.3	259.4	257.2	225.6	247.7	68.8	69.5	70.1	69.5	229.80	30.26	6956.05
2006/11/16	17:49:00	1213.8	919.1	273.9	293.9	254.9	254.1	545.6	1274.8	259.3	256.9	225.6	247.8	69.5	69.7	70.1	70.1	229.70	30.21	6939.24
2006/11/16	17:50:00	1215.0	920.7	273.7	294.2	253.3	254.2	544.6	1282.7	259.0	256.9	225.6	247.8	69.7	69.6	70.4	70.0	229.00	30.15	6904.35
2006/11/16	17:51:00	1214.5	921.9	274.1	293.8	254.4	254.3	546.5	1215.0	259.2	256.9	225.6	247.8	69.3	69.3	70.6	70.1	229.10	30.15	6907.37
2006/11/16	17:52:00	1214.4	921.6	273.9	294.4	254.1	254.0	544.8	1273.6	258.5	256.9	225.6	247.8	68.6	69.3	69.9	69.7	229.40	30.21	6930.17
2006/11/16	17:53:00	1215.0	919.1	273.9	293.7	254.9	253.9	545.1	1288.5	258.9	256.9	225.7	247.9	68.8	69.1	69.8	70.0	229.60	30.24	6943.10
2006/11/16	17:54:00	1215.5	920.9	273.9	293.7	254.0	253.9	543.7	1290.8	259.0	257.0	225.7	247.8	68.8	69.8	69.8	69.3	229.20	30.19	6919.55
2006/11/16	17:55:00	1214.7	918.5	273.9	293.8	253.3	253.8	545.2	1255.9	259.3	256.5	225.6	247.8	69.1	69.7	69.1	69.5	228.70	30.13	6890.73
2006/11/16	17:56:00	1214.4	921.0	273.9	294.1	253.8	254.2	543.7	1228.1	259.2	256.7	225.9	247.9	68.4	68.8	69.3	69.3	229.20	30.23	6928.72
2006/11/16	17:57:00	1214.4	922.6	273.9	293.3	254.1	254.0	544.1	1288.3	259.8	256.4	225.7	247.9	68.8	68.8	70.2	69.7	229.40	30.20	6927.88
2006/11/16	17:58:00	1213.4	922.9	274.1	294.7	253.2	254.0	545.9	1249.5	258.9	256.9	225.7	247.9	69.5	70.1	70.0	70.0	229.60	30.28	6968.36
2006/11/16	17:59:00	1213.6	923.3	274.1	294.3	253.8	254.0	545.7	1064.1	259.1	256.7	225.7	247.9	69.5	69.9	69.9	69.0	230.00	30.19	6949.74
2006/11/16	18:00:00	1213.6	922.6	274.1	295.2	254.0	254.1	545.9	1260.8	259.2	256.9	226.0	247.9	69.5	69.5	69.9	69.3	229.60	30.25	6945.40
2006/11/16	18:01:00	1213.8	921.0	274.1	293.6	254.0	253.9	545.6	1234.6	259.2	256.5	225.7	247.9	68.8	68.8	70.1	69.5	229.70	30.22	6941.53
2006/11/16	18:02:00	1214.7	919.6	274.1	294.3	254.7	254.3	544.9	1255.4	259.3	257.0	225.7	247.9	69.1	69.1	70.2	69.9	230.20	30.24	6964.27
2006/11/16	18:03:00	1215.1	919.0	273.9	293.7	254.6	254.0	544.7	1169.7	259.4	256.9	225.7	248.1	69.3	69.3	70.8	69.7	230.10	30.19	6949.74
2006/11/16	18:04:00	1215.1	920.6	274.2	294.0	253.9	253.9	544.4	1214.1	259.0	256.7	225.9	248.1	70.2	68.8	70.4	69.9	229.70	30.15	6925.45
2006/11/16	18:05:00	1215.4	919.4	274.2	293.6	254.5	253.9	544.6	1274.6	259.0	256.9	226.0	248.1	69.3	69.5	70.4	69.3	230.10	30.29	6969.73

Heat Rise Test
1st Run

Date	Time	TC1	TC2	TC3	TC4	TC5	TC6	TC7	TC8	TC9	TC10	TC11	TC12	TC13	TC14	TC15	TC16	VDC	Amps	Watts
2006/11/16	18:06:00	1215.1	922.4	273.9	293.8	254.3	254.0	544.9	1241.3	259.3	256.7	226.1	248.1	69.7	69.5	70.2	69.6	230.20	30.30	6977.36
2006/11/16	18:07:00	1214.4	919.6	274.1	293.9	254.4	254.4	544.7	1240.2	259.2	256.4	226.2	248.1	69.1	69.1	70.6	69.3	230.10	30.29	6969.73
2006/11/16	18:08:00	1214.4	921.9	274.2	293.6	253.4	253.9	545.7	1080.5	258.5	256.4	226.2	248.1	69.0	69.7	69.3	68.6	229.30	30.24	6936.33
2006/11/16	18:09:00	1215.2	918.6	274.2	294.4	253.7	253.6	546.0	1149.8	259.1	256.7	225.9	248.1	69.5	69.9	70.1	68.6	229.40	30.24	6937.06
2006/11/16	18:10:00	1214.3	920.1	274.2	294.1	253.8	254.1	545.2	1108.0	258.8	256.7	226.0	248.1	69.1	69.3	69.6	69.1	230.00	30.28	6964.40
2006/11/16	18:11:00	1214.2	921.8	274.4	294.4	253.6	254.3	544.8	1171.6	259.3	256.7	226.2	248.1	70.0	69.3	69.7	69.1	229.60	30.23	6943.83
2006/11/16	18:12:00	1214.6	921.0	274.2	294.9	253.6	253.8	545.6	1034.9	259.5	256.5	226.0	248.1	68.1	69.5	69.1	69.3	229.70	30.22	6941.53
2006/11/16	18:13:00	1214.2	918.0	274.1	294.3	253.4	253.8	545.4	1165.1	259.2	256.4	226.0	248.1	68.1	69.0	69.0	69.3	229.80	30.30	6978.09
2006/11/16	18:14:00	1214.3	919.4	274.2	294.3	254.3	254.2	545.7	1042.1	259.2	256.5	226.2	248.1	68.1	68.6	69.0	68.8	229.70	30.23	6946.13
2006/11/16	18:15:00	1214.4	918.2	274.2	294.0	254.1	254.3	546.2	1180.7	259.1	256.5	226.2	248.1	69.6	67.9	69.9	68.6	229.80	30.26	6953.75
2006/11/16	18:16:00	1214.9	918.8	274.1	293.2	254.4	254.2	544.5	1124.4	259.2	256.4	226.0	248.2	68.8	68.2	70.3	68.6	229.70	30.22	6941.53
2006/11/16	18:17:00	1214.8	919.6	274.2	294.6	254.3	254.2	544.6	1120.7	259.1	256.7	226.0	248.1	68.8	69.5	69.3	69.1	229.60	30.24	6943.10
2006/11/16	18:18:00	1214.4	921.0	274.2	294.4	254.9	254.6	546.0	1193.6	259.3	256.9	226.1	248.2	69.1	69.9	69.5	69.1	228.50	30.20	6902.99
2006/11/16	18:19:00	1214.4	921.2	274.4	294.0	254.8	254.3	546.0	1190.3	259.7	256.9	226.2	248.2	69.1	69.3	70.4	69.6	228.90	30.02	6904.60
2006/11/16	18:20:00	1214.3	918.0	274.2	294.4	254.5	254.2	545.6	1125.1	259.7	256.7	226.1	248.3	69.1	69.5	70.2	69.7	229.50	30.22	6947.58
2006/11/16	18:21:00	1215.0	920.5	274.4	294.3	253.7	254.4	544.7	1201.9	258.9	256.7	226.2	248.2	69.3	69.3	70.3	69.3	228.90	30.14	6899.05
2006/11/16	18:22:00	1214.4	920.4	274.2	294.4	254.0	254.5	546.0	1200.9	259.5	256.9	226.2	248.2	67.9	68.4	69.5	69.1	229.40	30.20	6927.88
2006/11/16	18:23:00	1214.6	919.1	274.4	294.4	253.0	253.8	544.9	1138.0	259.5	256.9	226.1	248.2	68.4	68.4	68.8	69.3	229.40	30.09	6911.67
2006/11/16	18:24:00	1214.2	918.8	274.4	294.4	254.0	254.1	544.7	1123.7	258.9	256.7	226.1	248.1	69.7	69.3	69.1	68.6	228.20	30.22	6923.59
2006/11/16	18:25:00	1214.4	919.4	274.4	294.2	254.7	253.9	546.2	1029.8	259.8	257.0	225.9	247.9	69.3	67.8	69.9	69.1	229.90	30.26	6956.77
2006/11/16	18:26:00	1213.8	921.9	274.6	294.4	254.0	254.3	546.7	1181.0	259.2	256.5	226.1	247.9	69.1	68.2	70.2	68.6	229.80	30.27	6956.05
2006/11/16	18:27:00	1214.2	920.6	274.2	294.8	253.7	254.3	545.9	1176.9	259.1	256.4	226.2	247.9	69.1	68.6	69.3	67.8	228.70	30.13	6935.93
2006/11/16	18:28:00	1215.4	919.4	274.4	294.1	254.4	254.3	544.9	1146.9	259.4	256.7	226.1	247.9	69.1	68.4	69.9	68.4	230.00	30.30	6969.00
2006/11/16	18:29:00	1214.2	922.4	274.4	294.6	254.1	254.2	545.4	1156.4	259.3	256.5	226.1	247.9	68.6	69.0	69.7	68.1	229.60	30.01	6890.30
2006/11/16	18:30:00	1214.4	922.4	274.4	294.4	254.0	254.3	546.2	1058.6	259.2	256.7	226.1	248.1	69.6	69.1	69.3	68.1	229.20	30.22	6926.42
2006/11/16	18:31:00	1213.7	921.6	274.4	294.6	253.8	254.1	545.9	1120.4	259.2	256.7	226.1	248.2	69.1	69.1	70.4	69.1	229.40	30.20	6927.88
2006/11/16	18:32:00	1214.1	921.3	274.4	295.1	254.2	254.5	546.2	996.2	259.4	256.7	226.2	248.2	68.6	69.6	70.4	69.3	228.30	30.21	6915.21
2006/11/16	18:33:00	1213.6	921.4	274.4	294.7	254.9	254.5	545.4	1176.4	259.3	256.9	226.1	248.2	69.0	69.5	69.9	69.1	229.20	30.23	6935.59
2006/11/16	18:34:00	1213.9	922.3	274.6	294.9	254.6	254.2	546.2	1101.5	259.8	257.2	226.1	248.2	69.1	69.5	70.6	69.5	229.90	30.24	6959.07
2006/11/16	18:35:00	1214.4	919.4	274.4	295.2	254.4	254.3	546.5	1164.8	259.1	257.2	226.1	248.2	68.3	69.1	69.5	69.1	229.80	30.24	6960.64
2006/11/16	18:36:00	1214.5	920.2	274.6	294.9	254.3	254.6	545.9	1181.1	259.3	257.5	226.0	248.1	69.0	69.1	69.7	69.3	228.80	30.13	6893.74
2006/11/16	18:37:00	1214.4	921.5	274.4	294.4	254.2	254.4	545.7	1160.3	259.8	257.4	225.9	248.1	69.0	69.0	70.1	69.1	228.90	30.19	6910.49
2006/11/16	18:38:00	1215.4	922.1	274.6	294.7	253.3	254.0	546.7	990.8	259.1	256.9	225.9	248.1	69.1	67.6	69.9	68.0	229.50	30.23	6937.79
2006/11/16	18:39:00	1214.6	921.0	274.6	294.9	253.3	254.1	544.9	1140.6	259.9	256.9	226.2	248.2	68.2	69.1	69.5	68.8	228.90	30.20	6926.51
2006/11/16	18:40:00	1214.4	920.7	274.4	294.0	255.1	254.2	544.8	1083.1	259.7	256.9	226.2	248.3	68.4	68.8	69.1	68.1	229.50	30.20	6937.79
2006/11/16	18:41:00	1214.9	921.6	274.6	293.6	255.2	254.4	545.1	1073.8	259.6	257.4	226.2	248.4	69.0	68.8	69.8	68.8	229.70	30.25	6950.72
2006/11/16	18:42:00	1214.7	922.1	274.7	293.8	254.0	254.2	546.4	1133.6	259.8	257.2	226.4	248.4	68.8	70.2	69.3	69.1	227.70	30.21	6878.82
2006/11/16	18:43:00	1214.8	922.4	274.6	294.3	254.9	254.2	545.9	1131.8	259.3	257.2	226.5	248.4	69.1	69.3	69.8	69.1	228.30	30.13	6911.82
2006/11/16	18:44:00	1214.6	922.6	274.6	292.9	254.3	254.3	545.6	1058.5	259.7	257.0	226.4	248.3	67.8	69.3	70.6	69.3	229.60	30.22	6938.51
2006/11/16	18:45:00	1215.0	920.0	274.7	294.1	253.1	254.3	545.1	1058.5	259.3	256.9	226.4	248.3	67.8	68.2	69.6	68.6	229.60	30.24	6945.40
2006/11/16	18:46:00	1214.7	920.0	274.6	294.4	253.8	254.7	545.2	1069.2	259.7	256.7	226.2	248.3	68.8	69.1	70.1	68.8	228.10	30.19	6909.15
2006/11/16	18:47:00	1214.5	922.9	274.7	294.3	254.2	254.5	545.2	1101.0	260.2	257.5	226.2	248.2	68.8	69.3	69.7	68.8	229.50	30.26	6944.67
2006/11/16	18:48:00	1214.4	925.1	274.6	293.5	254.6	254.6	545.7	915.8	259.7	257.4	226.2	248.2	68.8	68.8	70.6	69.5	229.70	30.23	6946.13
2006/11/16	18:49:00	1214.5	923.6	274.7	294.0	254.7	254.4	545.9	947.7	259.2	257.0	226.2	248.3	68.3	69.3	70.6	69.5	229.70	30.07	6907.08
2006/11/16	18:50:00	1214.1	924.3	274.4	294.2	254.3	254.7	546.0	956.1	259.4	257.4	226.4	248.3	68.0	69.3	69.6	69.6	229.70	30.22	6943.83
2006/11/16	18:51:00	1214.4	922.4	274.6	295.1	254.8	254.0	545.7	953.0	259.7	257.2	226.2	248.3	68.6	69.3	69.0	69.3	229.40	30.18	6923.29
2006/11/16	18:52:00	1214.6	918.5	274.4	294.0	254.1	254.1	545.4	937.5	259.1	257.0	226.2	248.4	70.3	69.5	69.3	69.1	230.10	30.29	6974.33
2006/11/16	18:53:00	1214.2	919.4	274.4	293.8	253.9	254.0	545.1	1051.5	259.5	257.0	226.2	248.3	69.1	69.6	69.6	68.8	229.20	30.09	6905.66
2006/11/16	18:54:00	1215.2	920.9	274.4	294.3	253.9	253.9	544.2	826.7	259.6	256.9	226.0	248.2	69.1	69.1	70.1	69.9	230.10	30.29	6972.03
2006/11/16	18:55:00	1214.5	920.4	274.4	294.7	254.4	254.8	545.7	762.3	259.4	256.9	226.1	248.2	69.1	69.0	69.9	69.1	230.10	30.29	6972.03
2006/11/16	18:56:00	1214.1	923.6	274.7	294.2	254.1	254.4	545.7	860.9	260.0	257.2	226.2	248.2	68.6	68.6	69.6	69.5	230.00	30.29	6974.33
2006/11/16	18:57:00	1214.2	920.9	274.7	294.2	254.5	254.3	545.4	896.9	259.3	257.2	226.2	248.3	68.6	69.7	69.3	69.5	229.70	30.21	6954.34
2006/11/16	18:58:00	1213.7	920.7	274.4	294.2	254.3	253.9	545.6	1125.1	258.8	256.9	226.4	248.3	69.1	69.6	69.1	68.4	230.10	30.29	6972.03
2006/11/16	18:59:00	1213.8	921.4	274.7	294.2	254.5	254.2	545.2	1049.3	259.3	256.7	226.4	248.3	67.9	68.6	70.1	68.8	230.10	30.27	6968.15
2006/11/16	19:00:00	1213.8	921.0	274.6	294.8	254.7	254.1	545.2	1039.5	259.4	256.9	226.4	248.2	67.8	69.1	69.0	68.4	229.90	30.27	6959.07
2006/11/16	19:01:00	1213.7	922.0	274.6	295.2	254.6	254.0	545.2	1098.7	259.4	256.7	226.4	248.2	68.1	69.7	69.7	69.0	229.40	30.21	6930.17

Heat Rise Test
1st Run

Date	Time	TC1	TC2	TC3	TC4	TC5	TC6	TC7	TC8	TC9	TC10	TC11	TC12	TC13	TC14	TC15	TC16	VDC	Amps	Watts
2006/11/16	19:02:00	1214.0	922.1	274.6	295.6	253.7	254.5	543.9	933.9	259.0	257.2	226.5	248.2	69.3	68.6	70.0	69.1	229.90	30.25	6957.50
2006/11/16	19:03:00	1214.1	920.9	274.7	295.1	254.3	254.3	545.6	1053.3	259.6	257.0	226.5	248.2	68.6	68.6	69.8	69.6	229.20	30.19	6919.55
2006/11/16	19:04:00	1214.3	922.1	274.7	294.1	254.1	254.1	544.7	1056.2	259.4	257.0	226.4	248.3	68.3	68.0	69.5	69.1	229.70	30.25	6948.43
2006/11/16	19:05:00	1215.6	921.2	274.6	295.1	254.1	254.1	545.7	1066.2	260.1	257.4	226.5	248.3	67.8	68.8	69.5	69.1	230.10	30.17	6945.13
2006/11/16	19:06:00	1214.4	920.7	274.7	294.4	254.7	254.1	544.8	1110.0	259.5	257.4	226.2	248.3	67.6	69.1	69.5	69.1	229.60	30.25	6945.40
2006/11/16	19:07:00	1214.9	921.2	274.7	294.3	254.2	254.3	544.3	1060.1	259.8	257.4	226.2	248.3	67.6	69.5	69.3	68.8	229.80	30.25	6951.45
2006/11/16	19:08:00	1215.2	918.7	274.9	294.2	254.5	254.3	543.6	1006.5	259.8	257.0	226.2	248.3	68.4	69.7	69.3	68.2	229.90	30.26	6959.07
2006/11/16	19:09:00	1214.5	922.1	274.7	295.6	254.5	254.1	545.4	802.9	259.3	257.2	226.5	248.3	68.6	68.3	69.8	69.1	229.80	30.19	6955.78
2006/11/16	19:10:00	1215.1	922.6	274.7	293.9	254.4	254.4	546.4	1048.8	259.6	256.9	226.5	248.3	69.3	67.8	69.0	69.0	229.40	30.17	6921.00
2006/11/16	19:11:00	1214.8	918.4	274.9	294.9	254.3	254.5	546.2	940.5	259.8	257.7	226.5	248.4	68.1	68.6	69.6	69.3	229.10	30.22	6923.40
2006/11/16	19:12:00	1214.5	921.6	274.9	295.1	253.9	254.4	545.4	999.9	259.8	257.7	226.5	248.4	68.0	69.3	68.8	69.5	229.40	30.24	6937.06
2006/11/16	19:13:00	1214.4	918.1	274.9	295.1	254.6	254.7	545.1	949.6	259.4	257.4	226.5	248.4	69.3	69.5	70.1	69.3	230.00	30.28	6964.40
2006/11/16	19:14:00	1213.6	923.1	274.9	294.8	253.8	254.6	546.9	982.8	260.1	257.7	226.7	248.4	68.6	69.1	70.1	68.8	230.10	30.29	6972.76
2006/11/16	19:15:00	1213.6	922.0	275.0	295.1	254.1	254.5	545.7	818.5	259.8	257.7	226.5	248.4	68.2	68.8	69.7	68.8	230.10	30.23	6967.43
2006/11/16	19:16:00	1213.7	922.1	275.0	295.2	254.3	254.6	546.9	863.9	259.8	257.5	226.7	248.6	69.0	68.8	70.0	68.8	229.40	30.21	6941.64
2006/11/16	19:17:00	1214.5	922.9	274.9	294.1	255.4	254.8	546.2	857.2	259.5	257.7	226.7	248.6	68.8	69.0	69.9	69.1	229.40	30.20	6927.88
2006/11/16	19:18:00	1213.3	920.5	274.9	294.4	254.9	254.9	546.0	927.3	259.5	257.4	226.7	248.6	69.1	69.1	69.9	69.3	230.00	30.25	6957.50
2006/11/16	19:19:00	1213.8	921.7	275.0	294.4	254.2	254.9	545.2	983.7	260.3	257.5	226.7	248.6	68.8	69.3	69.7	69.7	229.60	30.26	6947.70
2006/11/16	19:20:00	1215.0	922.1	275.2	294.9	254.0	254.7	545.4	1033.1	260.2	257.7	226.7	248.6	69.3	69.5	69.3	69.9	230.10	30.28	6972.03
2006/11/16	19:21:00	1214.3	919.9	274.9	294.2	255.2	254.8	545.4	1016.6	260.4	257.7	226.4	248.4	69.1	69.6	69.9	69.5	229.90	30.27	6961.37
2006/11/16	19:22:00	1215.4	920.7	274.9	294.7	254.9	254.6	545.4	1044.0	260.1	257.7	226.9	248.6	68.8	69.3	70.2	69.7	229.90	30.26	6956.77
2006/11/16	19:23:00	1215.6	921.2	275.0	293.7	254.8	254.7	545.7	1006.3	259.9	257.2	226.7	248.7	68.6	69.8	70.0	69.5	229.60	30.23	6940.81
2006/11/16	19:24:00	1213.9	920.4	274.9	294.4	254.5	254.6	544.9	965.6	259.5	258.0	226.9	248.7	69.0	69.5	70.3	69.3	229.60	30.23	6940.81
2006/11/16	19:25:00	1213.0	918.7	275.2	294.0	253.8	254.6	545.2	958.2	259.9	258.0	226.7	248.7	68.6	69.7	69.9	70.1	230.00	30.27	6968.15
2006/11/16	19:26:00	1213.2	920.4	275.2	294.9	254.6	254.5	546.2	986.1	260.0	257.9	226.9	248.7	69.9	68.4	70.1	70.0	229.80	30.26	6953.75
2006/11/16	19:27:00	1214.0	923.3	275.0	294.7	254.1	254.5	546.2	1036.5	260.1	257.7	226.7	248.7	68.8	69.1	70.0	69.7	229.10	30.24	6934.86
2006/11/16	19:28:00	1213.8	922.9	275.0	295.6	254.8	254.2	547.1	870.5	260.7	258.0	226.9	248.7	69.0	69.3	70.1	69.7	230.20	30.28	6972.76
2006/11/16	19:29:00	1213.9	921.3	275.2	294.9	254.3	254.6	544.9	866.8	260.1	257.9	226.7	248.7	69.3	69.3	69.7	69.8	228.20	30.09	6866.54
2006/11/16	19:30:00	1214.7	921.4	275.0	295.1	254.2	254.6	546.2	932.2	259.8	257.7	227.0	248.7	69.3	69.3	70.0	69.3	229.40	30.18	6923.29
2006/11/16	19:31:00	1214.1	921.1	275.2	294.9	254.9	254.4	545.7	971.9	260.1	257.8	227.0	248.7	69.1	69.3	70.2	69.5	230.20	30.30	6975.06
2006/11/16	19:32:00	1215.1	919.9	275.2	293.7	255.4	254.8	545.6	1006.8	260.1	257.9	227.0	248.7	69.7	69.3	70.8	69.3	230.20	30.30	6975.06
2006/11/16	19:33:00	1214.6	919.4	275.2	294.9	255.1	254.6	546.0	1038.1	260.1	258.2	227.0	248.7	68.8	68.8	70.6	69.3	230.20	30.29	6972.76
2006/11/16	19:34:00	1215.0	922.1	275.3	294.9	255.4	254.4	545.9	1042.0	260.1	257.9	227.0	248.7	69.3	69.3	70.8	69.3	229.60	30.25	6951.45
2006/11/16	19:35:00	1214.4	921.7	275.2	294.7	254.5	254.8	543.7	885.9	260.4	258.0	226.7	248.7	68.4	69.7	70.3	69.5	230.20	30.29	6972.76
2006/11/16	19:36:00	1214.4	920.8	275.3	295.6	254.5	254.9	546.7	939.1	259.9	258.2	227.0	248.7	68.6	69.0	69.5	69.5	229.90	30.22	6947.58
2006/11/16	19:37:00	1213.6	921.7	275.2	294.9	255.3	254.9	546.7	953.2	260.3	257.9	227.2	248.9	69.1	69.3	70.6	69.5	229.40	30.29	6955.41
2006/11/16	19:38:00	1214.9	918.0	275.2	294.9	255.4	254.9	545.4	964.6	260.5	257.7	227.0	248.9	69.7	69.6	70.8	69.5	229.90	30.24	6952.18
2006/11/16	19:39:00	1214.0	922.9	275.3	295.1	255.4	254.8	545.9	901.6	260.9	258.2	227.2	248.9	68.2	69.0	70.1	69.7	229.80	30.26	6953.75
2006/11/16	19:40:00	1213.8	922.1	275.2	295.2	254.7	254.8	546.2	947.3	259.4	258.2	227.0	248.9	69.3	69.5	70.3	68.6	229.70	30.26	6950.72
2006/11/16	19:41:00	1214.6	919.9	275.3	294.4	253.8	254.9	544.9	968.1	260.7	257.8	227.0	248.9	68.8	69.8	70.2	69.3	230.10	30.29	6969.73
2006/11/16	19:42:00	1215.0	922.1	275.2	294.7	254.2	254.5	545.9	903.4	260.6	258.3	227.0	248.9	69.1	69.7	70.2	69.7	230.20	30.29	6975.06
2006/11/16	19:43:00	1215.1	921.3	275.2	294.9	254.6	254.0	546.0	956.6	260.8	257.9	227.0	248.9	69.1	69.3	70.0	69.6	229.60	30.26	6956.77
2006/11/16	19:44:00	1215.4	918.7	275.2	294.8	254.3	254.8	544.4	911.2	259.8	257.9	227.0	248.9	68.1	69.3	70.2	69.3	229.80	30.15	6928.47
2006/11/16	19:45:00	1215.0	920.8	275.2	296.2	254.3	254.9	545.4	901.9	260.3	257.7	227.0	248.9	68.8	69.5	70.2	69.3	229.80	30.22	6949.15
2006/11/16	19:46:00	1214.5	921.4	275.3	294.4	254.5	254.8	546.2	935.6	260.0	258.0	227.2	248.9	69.1	69.5	69.8	69.3	229.90	30.17	6948.15
2006/11/16	19:47:00	1214.9	921.0	275.3	294.2	254.4	254.6	547.4	947.7	260.3	258.0	227.0	248.9	68.4	69.3	69.6	69.5	229.20	30.26	6953.93
2006/11/16	19:48:00	1214.7	919.4	275.3	294.8	254.3	254.5	546.2	997.2	260.0	257.9	227.0	248.9	69.7	68.8	69.6	70.1	229.70	30.24	6946.13
2006/11/16	19:49:00	1214.2	919.9	275.2	294.8	254.9	255.2	546.9	889.7	259.9	257.9	227.2	248.9	69.1	70.1	69.9	69.8	229.50	30.18	6933.20
2006/11/16	19:50:00	1214.0	921.9	275.3	294.4	254.5	254.6	546.7	941.6	260.2	257.7	227.2	248.9	69.1	68.8	69.7	69.3	229.60	30.23	6940.81
2006/11/16	19:51:00	1213.9	922.1	275.2	295.2	253.9	254.6	546.2	984.9	260.2	257.5	227.0	248.9	69.3	68.1	70.1	68.3	229.90	30.24	6952.18
2006/11/16	19:52:00	1214.6	923.3	275.2	294.9	254.2	254.8	546.7	872.2	260.3	258.0	227.0	248.9	69.0	69.3	70.2	69.5	229.50	30.20	6930.90
2006/11/16	19:53:00	1214.4	922.0	275.3	293.8	254.9	254.3	544.3	899.5	260.7	258.2	227.0	248.9	68.6	70.0	69.3	69.1	229.50	30.23	6937.79
2006/11/16	19:54:00	1214.3	921.2	275.2	294.9	255.7	254.9	546.7	952.6	260.3	258.2	227.0	248.9	69.5	70.6	70.2	69.3	229.90	30.24	6954.47
2006/11/16	19:55:00	1215.4	920.7	275.4	294.3	255.1	255.4	544.9	921.1	260.9	258.4	227.0	248.9	68.8	70.1	70.6	69.7	229.40	30.22	6932.47
2006/11/16	19:56:00	1215.4	918.4	275.4	294.0	255.3	254.9	546.2	993.3	260.6	258.2	226.9	248.9	68.8	70.4	70.1	69.8	229.40	30.14	6914.12
2006/11/16	19:57:00	1215.5	921.5	275.4	294.1	254.3	254.9	546.2	1034.6	260.7	258.3	227.0	248.9	69.1	70.0	70.2	69.3	229.60	30.26	6947.70

Heat Rise Test
1st Run

Date	Time	TC1	TC2	TC3	TC4	TC5	TC6	TC7	TC8	TC9	TC10	TC11	TC12	TC13	TC14	TC15	TC16	VDC	Amps	Watts
2006/11/16	19:58:00	1215.4	919.6	275.3	295.2	254.8	254.8	545.4	1022.1	261.1	258.2	227.2	248.9	68.6	69.5	70.3	70.1	230.00	30.25	6960.53
2006/11/16	19:59:00	1214.9	922.6	275.4	295.1	254.6	254.5	546.8	894.2	260.8	258.5	227.2	249.1	68.6	69.9	69.9	69.3	229.10	30.19	6934.64
2006/11/16	20:00:00	1213.8	924.9	275.3	295.2	254.3	254.9	545.9	914.5	260.8	258.2	227.2	248.9	68.3	69.5	69.8	68.8	229.80	30.18	6935.36
2006/11/16	20:01:00	1214.1	921.3	275.3	295.2	255.4	254.8	545.9	918.6	260.9	258.2	227.0	248.9	68.4	69.3	70.0	69.3	229.80	30.25	6953.75
2006/11/16	20:02:00	1213.6	922.9	275.3	294.9	255.1	254.9	545.6	950.9	260.1	258.4	227.2	248.9	69.3	70.0	69.5	69.9	229.60	30.20	6943.10
2006/11/16	20:03:00	1213.5	922.0	275.4	294.8	255.1	255.1	545.9	1006.8	260.0	257.9	227.0	248.9	69.3	68.8	69.9	69.8	230.20	30.29	6977.36
2006/11/16	20:04:00	1214.0	920.7	275.5	294.9	254.7	254.9	546.7	871.1	260.4	258.0	227.2	248.9	69.0	69.1	69.9	69.5	230.20	30.29	6978.09
2006/11/16	20:05:00	1215.5	921.9	275.4	294.3	255.1	254.6	545.4	948.1	260.7	258.2	227.0	249.1	68.6	69.5	69.3	69.6	230.20	30.30	6977.36
2006/11/16	20:06:00	1215.4	919.4	275.3	294.7	255.1	255.1	545.9	1052.7	260.4	258.0	227.2	249.1	69.0	69.8	69.7	69.5	230.20	30.29	6972.76
2006/11/16	20:07:00	1215.1	920.6	275.3	294.9	254.7	255.2	545.4	1045.3	260.2	258.3	227.2	249.1	69.3	70.0	70.0	69.3	230.20	30.29	6977.36
2006/11/16	20:08:00	1214.5	922.1	275.4	294.9	254.9	254.9	545.9	988.1	260.4	258.3	227.4	249.2	68.6	69.9	69.8	70.1	230.20	30.29	6975.06
2006/11/16	20:09:00	1214.8	918.8	275.7	294.4	254.6	254.7	546.5	996.3	260.9	258.2	227.2	249.1	68.3	69.9	69.9	69.1	230.20	30.29	6975.06
2006/11/16	20:10:00	1215.2	919.1	275.5	294.7	255.2	254.8	546.5	996.6	261.1	258.4	227.2	249.2	68.2	69.9	69.7	69.6	230.10	30.29	6974.33
2006/11/16	20:11:00	1214.3	923.2	275.4	295.4	255.2	254.8	545.9	1019.6	260.5	258.2	227.2	249.2	68.8	69.7	69.3	69.1	230.20	30.29	6977.36
2006/11/16	20:12:00	1215.1	920.5	275.7	295.1	255.1	254.9	547.0	1019.9	260.3	258.2	227.5	249.2	68.8	69.8	69.7	69.3	230.20	30.29	6975.06
2006/11/16	20:13:00	1214.7	921.7	275.7	295.1	255.1	255.4	545.6	1021.8	260.7	258.4	227.7	249.2	69.3	69.5	69.8	69.7	230.20	30.29	6975.06
2006/11/16	20:14:00	1214.2	918.5	275.7	294.1	255.3	255.2	547.0	1027.1	261.1	258.4	227.2	249.2	68.6	69.3	70.2	69.5	230.20	30.30	6975.06
2006/11/16	20:15:00	1214.7	922.0	275.7	293.5	255.9	255.3	546.0	926.3	260.7	258.3	227.5	249.4	69.3	69.8	70.0	69.6	230.10	30.29	6972.03
2006/11/16	20:16:00	1214.3	919.4	275.7	296.0	255.4	254.8	546.2	914.2	260.6	258.4	227.5	249.4	69.1	69.7	69.3	69.1	230.10	30.30	6972.03
2006/11/16	20:17:00	1214.4	922.6	275.7	294.6	254.4	255.2	546.8	941.8	261.3	258.4	227.7	249.4	70.0	70.1	70.3	69.7	230.20	30.29	6975.06
2006/11/16	20:18:00	1214.3	922.9	275.7	294.1	254.7	254.6	547.1	945.2	260.6	258.3	227.5	249.4	69.0	69.8	69.8	68.6	230.20	30.29	6975.79
2006/11/16	20:19:00	1214.4	924.1	275.7	295.4	254.6	255.1	545.9	965.7	260.7	258.5	227.7	249.4	69.3	69.5	69.8	68.8	230.20	30.30	6975.06
2006/11/16	20:20:00	1214.5	920.9	275.7	295.2	254.8	254.9	546.2	972.2	260.5	257.9	227.7	249.4	69.3	68.4	69.8	68.6	230.20	30.30	6975.06
2006/11/16	20:21:00	1215.1	920.4	275.7	294.7	254.9	254.8	546.7	1069.8	260.9	258.2	227.4	249.2	68.6	69.3	69.3	69.1	230.10	30.29	6972.03
2006/11/16	20:22:00	1215.8	917.7	275.7	294.1	254.3	254.9	546.5	1070.0	260.6	258.3	227.4	249.2	69.0	69.3	70.3	69.5	230.10	30.29	6972.03
2006/11/16	20:23:00	1214.4	918.4	275.7	294.6	254.5	255.3	545.9	969.8	260.1	258.5	227.5	249.2	68.8	69.8	69.1	68.6	230.20	30.29	6975.06
2006/11/16	20:24:00	1213.7	921.8	275.7	295.2	254.3	255.2	545.2	885.3	261.1	258.5	227.5	249.2	69.3	69.7	69.3	68.8	230.20	30.29	6972.76
2006/11/16	20:25:00	1214.1	920.0	275.8	294.6	254.3	255.3	547.5	1085.5	260.9	258.6	227.5	249.2	68.8	69.1	70.3	69.9	230.10	30.29	6974.33
2006/11/16	20:26:00	1213.4	921.2	275.8	295.4	254.0	255.1	546.3	1108.0	260.4	258.5	227.5	249.4	68.3	70.3	69.3	69.1	230.10	30.29	6974.33
2006/11/16	20:27:00	1212.9	921.9	275.8	295.4	256.2	255.4	546.2	958.2	261.3	258.5	227.5	249.4	69.3	69.1	69.3	69.6	230.10	30.29	6972.03
2006/11/16	20:28:00	1215.4	921.3	275.8	294.4	256.1	255.4	547.3	998.3	261.4	258.7	227.5	249.4	68.8	69.3	70.6	69.7	230.10	30.30	6974.33
2006/11/16	20:29:00	1214.4	922.6	275.9	294.4	255.4	254.9	547.3	986.6	260.6	258.8	227.5	249.4	69.1	69.3	69.6	69.3	230.20	30.30	6975.06
2006/11/16	20:30:00	1214.0	921.8	275.9	295.6	256.1	254.8	546.9	984.1	261.3	258.7	227.2	249.4	68.6	69.9	69.5	69.9	230.10	30.29	6972.03
2006/11/16	20:31:00	1214.0	921.7	275.9	294.9	254.0	254.8	546.7	1015.0	260.8	258.8	227.5	249.2	69.1	69.1	69.5	69.8	230.10	30.29	6972.03
2006/11/16	20:32:00	1214.4	921.9	275.8	294.1	254.8	254.6	546.4	1000.0	260.8	258.4	227.5	249.2	69.0	69.1	69.6	69.6	230.10	30.29	6974.33
2006/11/16	20:33:00	1214.7	918.3	275.8	294.8	254.8	255.1	546.4	976.1	260.9	258.6	227.5	249.2	69.1	69.3	69.1	69.6	230.10	30.30	6974.33
2006/11/16	20:34:00	1214.4	920.4	275.9	294.4	255.4	255.2	546.2	969.1	261.6	258.5	227.2	249.2	68.4	69.3	69.9	69.8	230.20	30.29	6972.76
2006/11/16	20:35:00	1214.5	918.3	275.7	294.9	254.9	254.9	546.5	979.2	260.9	258.7	227.2	249.2	69.0	70.0	69.7	69.3	230.20	30.29	6972.76
2006/11/16	20:36:00	1213.9	922.0	275.9	294.9	255.6	255.3	546.3	1000.3	260.7	258.8	227.7	249.4	69.3	69.0	70.1	69.3	230.20	30.29	6972.76
2006/11/16	20:37:00	1214.0	920.2	275.9	295.1	255.7	255.3	545.7	1009.3	261.4	258.9	227.4	249.4	68.2	69.1	70.2	69.0	230.20	30.29	6972.76
2006/11/16	20:38:00	1215.1	921.0	276.0	295.6	253.5	255.3	547.3	1031.0	261.4	259.2	227.5	249.4	69.1	69.3	69.7	69.6	230.20	30.29	6972.76
2006/11/16	20:39:00	1214.6	922.7	276.0	294.9	255.7	255.3	546.0	1033.8	261.6	258.8	227.7	249.4	68.6	69.0	69.6	69.9	230.00	30.27	6962.10
2006/11/16	20:40:00	1215.2	923.2	276.2	294.9	255.1	255.3	547.2	949.9	261.2	258.9	227.7	249.4	68.2	68.8	69.6	69.6	230.20	30.29	6972.76
2006/11/16	20:41:00	1214.4	920.2	276.0	295.2	255.3	255.1	547.6	995.2	261.7	258.7	227.5	249.4	68.6	69.0	69.3	69.8	230.20	30.29	6972.76
2006/11/16	20:42:00	1214.4	921.3	276.2	295.7	255.4	255.3	547.2	1010.9	261.8	259.0	227.5	249.4	68.8	69.5	70.0	69.3	230.20	30.29	6972.76
2006/11/16	20:43:00	1215.0	921.2	276.0	295.6	254.3	255.2	546.8	1009.3	261.3	258.9	227.5	249.4	68.1	69.7	70.2	69.6	230.20	30.29	6972.76
2006/11/16	20:44:00	1214.5	922.7	276.0	295.1	254.9	254.9	547.2	992.8	260.9	258.7	227.7	249.2	68.4	68.8	69.9	69.6	230.10	30.27	6967.43
2006/11/16	20:45:00	1214.8	922.1	276.2	295.1	254.6	255.3	547.4	994.3	260.7	259.1	227.4	249.4	68.8	68.8	69.8	69.3	229.80	30.23	6946.85
2006/11/16	20:46:00	1215.4	920.6	276.2	295.2	254.9	255.4	545.1	1017.8	260.9	259.2	227.7	249.4	68.8	68.6	70.3	69.3	229.60	30.25	6945.40
2006/11/16	20:47:00	1215.0	919.7	276.2	295.2	254.8	255.6	546.9	995.6	260.9	258.7	227.4	249.4	69.1	69.3	69.9	69.9	229.90	30.27	6959.07
2006/11/16	20:48:00	1214.0	920.7	276.2	296.4	255.7	255.3	547.2	1003.0	261.4	259.1	227.5	249.4	69.7	69.7	70.4	69.7	230.10	30.29	6972.03
2006/11/16	20:49:00	1214.3	922.4	276.3	295.2	255.6	255.3	547.8	998.0	260.5	258.8	227.5	249.4	69.1	69.3	69.5	69.1	230.10	30.29	6969.73
2006/11/16	20:50:00	1213.9	922.1	276.2	295.2	255.2	255.1	546.9	1069.7	260.9	259.0	227.7	249.4	69.0	69.3	68.8	68.4	230.10	30.29	6972.03
2006/11/16	20:51:00	1213.9	922.9	276.3	295.2	255.4	255.6	547.0	1081.0	261.8	259.1	227.7	249.4	68.6	69.3	70.1	69.5	230.10	30.29	6972.03
2006/11/16	20:52:00	1214.0	921.9	276.2	294.9	255.1	255.4	547.9	1077.3	261.7	259.2	227.5	249.4	69.1	69.6	70.0	69.5	230.10	30.29	6969.73
2006/11/16	20:53:00	1214.1	921.0	276.3	295.4	255.4	255.4	546.0	926.4	261.7	258.7	227.5	249.4	69.1	69.3	70.4	69.6	229.90	30.20	6949.02

Heat Rise Test
1st Run

Date	Time	TC1	TC2	TC3	TC4	TC5	TC6	TC7	TC8	TC9	TC10	TC11	TC12	TC13	TC14	TC15	TC16	VDC	Amps	Watts
2006/11/16	20:54:00	1214.8	922.3	276.2	294.8	255.6	255.2	547.1	1017.0	261.6	259.0	227.7	249.4	69.3	69.8	69.3	69.9	229.60	30.20	6933.92
2006/11/16	20:55:00	1214.8	920.5	276.2	295.2	255.9	255.7	546.7	964.8	261.2	258.8	227.5	249.4	68.8	69.1	69.9	70.3	229.40	30.20	6927.88
2006/11/16	20:56:00	1214.0	919.1	276.3	295.7	254.9	255.4	547.6	928.7	260.6	258.7	227.7	249.4	70.6	68.2	70.0	68.8	230.10	30.29	6972.76
2006/11/16	20:57:00	1213.8	922.4	276.2	295.4	255.7	255.6	546.4	843.8	261.3	259.2	227.5	249.6	68.2	69.1	69.5	70.0	230.10	30.28	6967.43
2006/11/16	20:58:00	1215.0	921.8	276.2	294.8	254.7	255.2	547.1	851.9	260.7	259.1	227.7	249.7	68.6	68.8	69.1	69.0	230.10	30.27	6965.13
2006/11/16	20:59:00	1214.3	920.8	276.2	294.9	255.4	255.4	546.7	864.1	260.9	258.8	227.9	249.7	70.6	69.3	69.3	69.1	229.80	30.27	6956.05
2006/11/16	21:00:00	1215.1	920.4	276.3	294.4	255.6	255.4	546.9	785.3	261.7	258.8	227.7	249.7	70.0	69.5	69.3	69.3	229.90	30.22	6953.62
2006/11/16	21:01:00	1215.1	920.2	276.3	295.2	255.7	255.7	545.7	820.5	261.4	259.1	227.9	249.7	69.3	70.2	69.8	69.3	230.10	30.30	6972.03
2006/11/16	21:02:00	1214.5	919.3	276.4	294.9	255.7	255.7	547.1	756.3	261.8	259.1	227.7	249.7	69.0	69.3	70.1	69.9	229.70	30.24	6946.13
2006/11/16	21:03:00	1215.2	919.4	276.4	295.1	255.4	255.4	546.0	781.2	261.6	259.1	227.7	249.7	69.1	69.1	70.2	70.2	229.70	30.26	6950.72
2006/11/16	21:04:00	1214.2	921.7	276.4	294.8	254.9	255.9	547.4	787.0	261.8	259.3	227.7	249.7	69.6	69.6	70.1	70.4	230.10	30.23	6955.92
2006/11/16	21:05:00	1214.4	922.7	276.2	295.2	255.4	255.7	546.9	787.3	261.3	259.1	227.7	249.7	69.1	68.8	70.8	70.0	230.20	30.29	6972.76
2006/11/16	21:06:00	1214.6	920.6	276.3	295.6	255.4	255.7	547.9	810.7	261.9	259.2	228.0	249.7	68.2	69.3	69.3	69.3	230.20	30.30	6975.06
2006/11/16	21:07:00	1214.3	921.9	276.5	295.6	255.3	255.9	547.5	780.8	261.9	259.3	227.9	249.7	69.8	69.3	69.1	69.3	229.80	30.25	6951.45
2006/11/16	21:08:00	1213.7	922.9	276.5	296.6	255.3	256.2	545.9	947.1	261.9	259.2	227.9	249.7	69.8	69.7	69.9	69.3	230.10	30.29	6969.73
2006/11/16	21:09:00	1215.1	921.3	276.5	294.4	255.4	255.9	546.7	937.5	261.9	259.3	227.7	249.7	68.3	69.6	69.8	69.6	229.40	30.22	6932.47
2006/11/16	21:10:00	1215.4	921.0	276.5	295.2	255.2	255.6	548.3	869.2	261.4	259.3	228.0	249.9	69.1	70.1	70.3	69.8	230.00	30.28	6964.40
2006/11/16	21:11:00	1214.9	920.5	276.4	295.4	254.9	255.6	547.1	860.9	261.8	259.3	228.0	249.9	69.5	70.3	69.8	69.9	230.00	30.23	6961.97
2006/11/16	21:12:00	1214.4	921.3	276.3	296.1	255.2	255.7	546.3	865.4	261.7	258.8	228.0	249.7	69.0	69.8	70.6	69.3	230.20	30.29	6972.76
2006/11/16	21:13:00	1214.4	922.1	276.4	295.2	255.1	255.4	547.1	836.1	262.2	259.2	227.9	249.9	69.3	70.8	70.0	70.3	230.10	30.30	6974.33
2006/11/16	21:14:00	1214.4	919.6	276.4	294.4	255.4	255.3	547.1	949.8	261.3	259.1	227.7	249.7	68.8	69.6	69.5	69.3	230.10	30.29	6974.33
2006/11/16	21:15:00	1214.4	920.5	276.3	295.7	255.4	255.2	546.3	907.9	261.7	259.1	227.9	249.9	67.9	69.9	69.3	69.5	230.20	30.29	6975.06
2006/11/16	21:16:00	1214.5	918.5	276.5	295.6	254.7	256.1	547.1	987.3	262.1	259.2	227.9	249.9	69.0	69.6	70.6	70.0	230.10	30.27	6971.18
2006/11/16	21:17:00	1214.4	921.3	276.6	295.2	256.1	255.6	546.7	988.5	261.4	259.4	228.0	249.9	69.7	69.5	70.6	69.3	228.90	30.20	6912.78
2006/11/16	21:18:00	1214.3	923.9	276.6	295.2	255.9	255.6	546.7	889.1	262.1	259.5	227.9	249.7	69.0	70.6	69.3	69.5	230.20	30.29	6975.06
2006/11/16	21:19:00	1214.3	921.7	276.5	295.4	255.4	255.1	547.9	926.6	262.1	259.7	228.0	249.9	69.0	69.3	69.8	70.1	230.20	30.29	6975.06
2006/11/16	21:20:00	1213.9	919.4	276.4	295.4	255.7	255.9	547.2	881.8	261.9	259.7	227.9	249.9	69.1	69.3	69.8	69.1	230.20	30.29	6975.79
2006/11/16	21:21:00	1214.4	921.9	276.5	294.4	255.1	255.9	547.4	832.2	261.3	259.4	227.9	249.9	69.7	69.1	70.2	69.7	229.30	30.23	6931.74
2006/11/16	21:22:00	1214.6	920.8	276.4	294.9	255.7	256.2	548.7	859.1	261.8	259.4	227.7	249.9	68.8	69.5	69.5	69.3	230.10	30.28	6972.03
2006/11/16	21:23:00	1214.7	923.9	276.5	294.8	254.9	255.2	547.5	939.3	262.4	259.4	227.7	249.9	69.3	69.5	70.0	69.8	230.10	30.29	6975.06
2006/11/16	21:24:00	1215.1	919.7	276.4	294.3	255.4	255.4	547.1	844.9	261.3	259.9	228.0	249.9	68.8	69.5	69.9	69.3	230.20	30.28	6970.46
2006/11/16	21:25:00	1214.7	922.9	276.2	294.8	254.8	256.1	546.4	964.9	261.7	259.4	228.0	249.9	69.1	69.3	69.9	68.4	230.10	30.29	6969.73
2006/11/16	21:26:00	1214.4	920.4	276.6	295.4	254.9	255.9	547.9	976.1	262.2	259.6	228.0	249.9	68.2	69.7	69.5	69.8	229.90	30.23	6949.88
2006/11/16	21:27:00	1214.1	919.1	276.5	295.4	254.6	255.7	546.2	1019.3	261.1	259.0	228.0	249.9	69.1	69.3	69.6	69.3	230.20	30.25	6963.55
2006/11/16	21:28:00	1213.5	920.1	276.5	294.4	255.1	255.9	546.9	1033.3	260.9	259.6	228.2	249.9	69.3	69.7	70.0	68.8	230.00	30.26	6959.80
2006/11/16	21:29:00	1213.2	923.2	276.5	295.9	255.1	255.4	547.6	1031.1	261.4	259.1	228.2	249.9	69.7	69.7	69.6	69.0	229.10	30.12	6900.49
2006/11/16	21:30:00	1214.2	923.7	276.7	294.3	255.3	256.1	546.9	1035.8	261.7	259.3	228.2	249.9	69.1	69.7	70.4	70.6	230.10	30.29	6969.73
2006/11/16	21:31:00	1214.5	920.9	276.6	295.2	255.3	256.2	548.7	1041.5	262.2	259.3	227.9	249.9	69.5	69.9	70.6	70.0	230.10	30.29	6976.63
2006/11/16	21:32:00	1213.7	921.7	276.6	295.6	255.3	255.9	547.6	1032.7	261.9	259.6	228.2	249.9	69.0	69.3	70.2	69.8	230.10	30.29	6974.33
2006/11/16	21:33:00	1213.9	919.9	276.8	294.9	255.1	255.4	547.9	1067.4	261.9	259.4	228.0	249.9	69.0	69.9	70.6	69.8	230.20	30.30	6975.06
2006/11/16	21:34:00	1213.9	920.5	276.8	295.1	256.4	255.6	548.3	1053.6	261.8	259.8	227.9	249.7	69.1	70.0	70.6	70.0	229.70	30.25	6948.43
2006/11/16	21:35:00	1214.3	922.1	276.6	295.2	254.8	255.7	548.9	1088.5	261.7	259.9	228.0	249.9	68.3	69.9	69.9	69.6	230.10	30.24	6967.30
2006/11/16	21:36:00	1214.4	922.3	276.7	295.2	255.1	255.7	548.1	1096.5	261.8	259.9	227.7	249.7	68.4	69.7	69.3	69.9	230.10	30.29	6972.03
2006/11/16	21:37:00	1215.9	920.4	276.7	294.9	255.4	255.7	546.7	1100.2	261.9	259.8	227.7	249.7	68.8	70.0	69.6	69.8	230.20	30.29	6972.76
2006/11/16	21:38:00	1215.1	921.2	276.6	294.6	255.6	255.6	547.0	1072.5	261.4	259.4	227.9	249.7	68.4	69.6	69.5	69.3	230.20	30.29	6972.76
2006/11/16	21:39:00	1214.1	922.6	276.5	295.6	255.4	255.9	547.7	1049.5	261.7	259.3	227.7	249.9	68.6	70.0	69.7	69.1	230.10	30.30	6972.03
2006/11/16	21:40:00	1214.9	921.7	276.7	294.6	255.2	255.4	547.6	1077.7	261.4	259.4	227.7	249.9	68.6	70.3	69.3	69.5	230.20	30.29	6972.76
2006/11/16	21:41:00	1214.6	920.4	276.3	295.1	255.3	254.9	546.7	1086.6	261.4	259.3	228.0	249.9	68.8	69.3	69.8	69.1	229.90	30.27	6959.07
2006/11/16	21:42:00	1213.7	921.4	276.7	295.4	254.6	255.7	548.3	1100.2	261.9	259.4	228.2	249.9	68.6	70.4	70.4	70.0	230.00	30.29	6966.70
2006/11/16	21:43:00	1213.6	922.3	276.7	295.2	254.6	255.7	547.3	1093.7	261.9	259.5	228.2	250.0	68.6	70.2	69.7	69.7	230.10	30.29	6969.73
2006/11/16	21:44:00	1213.5	923.9	276.8	294.8	254.9	255.4	546.3	1099.0	261.4	259.7	228.0	250.0	69.0	70.1	69.7	69.6	230.10	30.29	6969.73
2006/11/16	21:45:00	1215.1	920.9	276.8	294.3	254.7	255.7	547.8	1088.7	261.4	259.5	228.0	249.9	70.0	70.1	70.8	70.0	230.10	30.29	6972.03
2006/11/16	21:46:00	1215.2	921.5	276.7	294.4	254.9	255.9	547.8	1097.8	262.2	259.6	228.0	249.9	69.5	70.1	70.0	70.1	230.10	30.29	6969.73
2006/11/16	21:47:00	1214.0	921.7	276.8	294.8	255.9	256.2	546.4	1070.7	262.2	259.8	228.2	249.9	69.3	70.3	70.4	69.9	230.10	30.29	6972.03
2006/11/16	21:48:00	1213.7	922.4	276.8	295.2	255.2	256.1	546.5	1062.3	262.2	259.9	228.0	249.9	69.3	69.1	70.1	69.7	229.40	30.21	6930.17
2006/11/16	21:49:00	1213.4	919.6	276.9	295.6	255.4	256.2	548.2	1081.0	262.4	259.9	227.9	249.9	69.1	69.7	70.6	70.1	230.10	30.27	6968.15

Heat Rise Test
1st Run

Date	Time	TC1	TC2	TC3	TC4	TC5	TC6	TC7	TC8	TC9	TC10	TC11	TC12	TC13	TC14	TC15	TC16	VDC	Amps	Watts
2006/11/16	21:50:00	1213.5	922.6	277.0	295.2	254.9	256.1	548.4	1055.1	262.2	259.8	227.9	249.9	69.7	69.5	70.3	69.8	230.10	30.29	6972.03
2006/11/16	21:51:00	1213.6	923.3	276.9	295.6	255.6	256.2	548.3	1042.4	262.6	259.8	228.0	250.0	68.3	70.0	69.6	69.9	230.00	30.22	6959.67
2006/11/16	21:52:00	1214.4	921.2	276.6	295.1	254.9	256.1	548.0	1054.8	262.4	260.0	228.2	250.2	69.1	70.1	69.1	69.7	229.80	30.27	6956.05
2006/11/16	21:53:00	1213.6	922.1	276.9	295.9	254.9	255.9	546.5	992.1	262.2	260.0	228.2	250.2	69.9	70.1	69.5	70.1	230.10	30.29	6972.03
2006/11/16	21:54:00	1213.9	922.4	276.7	294.8	254.9	255.9	548.0	1072.2	261.9	259.8	228.3	250.2	70.2	69.8	70.0	69.3	230.00	30.28	6964.40
2006/11/16	21:55:00	1214.0	922.1	276.9	295.4	256.1	256.2	548.8	1061.4	262.4	259.6	228.5	250.2	69.5	70.2	69.9	69.8	230.10	30.25	6969.60
2006/11/16	21:56:00	1214.7	920.4	276.9	295.1	255.7	256.2	547.4	1059.7	262.4	259.9	228.3	250.2	68.8	70.4	70.6	69.7	230.10	30.29	6972.03
2006/11/16	21:57:00	1215.1	920.8	277.2	295.7	254.9	255.9	547.7	1131.5	262.4	259.9	228.5	250.2	69.0	69.7	70.3	69.8	230.00	30.23	6964.99
2006/11/16	21:58:00	1214.2	921.1	277.2	296.0	255.1	256.4	548.9	1063.5	262.9	260.0	228.3	250.2	69.5	69.8	70.2	70.3	229.70	30.23	6949.88
2006/11/16	21:59:00	1213.7	922.1	277.1	296.4	255.1	256.2	547.4	1010.3	262.4	260.0	228.5	250.2	69.9	69.7	70.4	70.3	229.60	30.24	6943.10
2006/11/16	22:00:00	1214.0	922.6	277.3	295.2	255.7	256.4	547.1	988.6	262.7	260.2	228.5	250.4	69.7	70.6	70.1	70.8	230.10	30.30	6974.33
2006/11/16	22:01:00	1213.2	920.8	277.2	295.6	255.3	255.9	548.8	988.3	261.9	260.3	228.5	250.4	69.3	70.6	69.3	70.2	230.10	30.29	6969.73
2006/11/16	22:02:00	1213.2	919.9	277.0	296.4	254.8	256.2	547.9	1059.3	262.4	260.0	228.3	250.4	69.3	69.3	70.6	70.4	230.20	30.29	6975.79
2006/11/16	22:03:00	1213.9	924.0	277.0	295.7	255.4	255.9	548.3	1014.7	262.2	260.2	228.5	250.4	68.6	70.0	70.0	69.3	230.10	30.27	6969.73
2006/11/16	22:04:00	1213.9	922.1	277.2	295.9	254.6	256.2	547.3	1055.5	261.8	259.7	228.5	250.4	68.8	69.3	70.0	68.8	230.10	30.27	6969.73
2006/11/16	22:05:00	1213.5	921.9	277.1	294.9	256.1	255.9	547.6	1066.9	262.4	260.1	228.5	250.4	68.8	70.0	69.6	69.1	230.10	30.29	6969.73
2006/11/16	22:06:00	1213.6	921.9	277.2	294.6	255.4	255.9	547.3	1083.5	262.7	260.0	228.5	250.4	68.8	70.0	69.9	69.7	230.10	30.29	6974.33
2006/11/16	22:07:00	1214.4	919.6	277.0	294.9	254.9	256.1	547.1	1086.3	262.4	259.5	228.3	250.4	68.0	70.6	69.5	69.6	230.20	30.29	6975.06
2006/11/16	22:08:00	1215.1	922.9	277.0	296.0	255.2	256.2	547.9	1071.6	262.7	260.1	228.5	250.4	69.1	70.6	70.4	69.7	230.00	30.29	6966.70
2006/11/16	22:09:00	1214.4	922.4	277.1	294.9	256.2	256.2	546.7	1035.3	263.0	260.2	228.5	250.4	69.1	69.8	70.3	69.8	230.00	30.28	6964.40
2006/11/16	22:10:00	1214.5	922.1	277.0	294.9	255.7	256.1	547.0	1015.3	262.4	260.2	228.5	250.4	69.0	70.8	70.2	69.9	230.10	30.27	6965.13
2006/11/16	22:11:00	1215.4	920.6	277.0	295.1	255.2	255.9	548.4	1095.0	262.7	260.1	228.7	250.2	68.8	70.3	69.7	69.8	230.00	30.28	6966.70
2006/11/16	22:12:00	1214.6	921.6	277.3	295.4	254.6	256.1	548.2	874.9	262.6	260.2	228.5	250.4	69.6	69.8	70.8	70.2	230.00	30.26	6966.70
2006/11/16	22:13:00	1213.8	922.9	277.1	295.6	255.7	256.4	546.9	1079.2	261.9	260.2	228.5	250.4	69.8	69.7	70.1	69.8	230.00	30.29	6966.70
2006/11/16	22:14:00	1214.6	920.4	277.3	295.4	255.6	255.9	548.3	921.3	262.7	260.0	228.3	250.4	69.6	70.0	70.6	69.8	230.10	30.29	6972.76
2006/11/16	22:15:00	1215.5	923.9	277.2	295.2	255.6	256.2	548.8	922.4	262.6	260.0	228.7	250.4	69.5	70.1	70.1	69.1	230.10	30.28	6969.73
2006/11/16	22:16:00	1215.2	921.4	277.2	295.2	255.9	255.9	548.9	956.8	262.7	260.2	228.7	250.4	69.3	70.3	70.1	69.5	230.10	30.28	6967.43
2006/11/16	22:17:00	1214.6	921.1	277.4	295.4	256.2	256.2	549.7	1025.7	263.0	260.1	228.5	250.4	69.0	69.1	70.2	70.0	230.10	30.29	6969.73
2006/11/16	22:18:00	1215.6	921.0	277.4	295.4	255.7	255.9	547.0	1048.0	261.6	260.2	228.5	250.4	69.5	69.3	70.4	69.5	230.00	30.28	6969.00
2006/11/16	22:19:00	1215.5	919.4	277.3	295.9	255.4	256.4	548.1	928.9	261.7	260.1	228.7	250.4	69.1	69.6	70.3	69.1	229.90	30.28	6961.37
2006/11/16	22:20:00	1214.9	918.4	277.3	295.4	255.9	256.5	547.2	1100.5	262.7	260.3	228.7	250.4	69.1	70.2	70.3	70.1	229.50	30.23	6937.79
2006/11/16	22:21:00	1214.8	921.7	277.4	294.9	255.7	256.2	548.6	1194.9	262.7	260.3	228.7	250.4	69.7	69.9	70.4	69.9	230.10	30.29	6969.73
2006/11/16	22:22:00	1215.0	921.6	277.3	295.9	255.7	256.2	547.8	915.3	262.6	260.3	228.5	250.4	69.1	69.7	69.5	69.3	230.10	30.30	6974.33
2006/11/16	22:23:00	1214.8	921.2	277.4	295.2	255.7	256.5	548.3	1112.2	262.2	260.0	228.5	250.4	69.6	69.6	70.3	69.3	230.10	30.28	6969.73
2006/11/16	22:24:00	1213.9	923.2	277.1	295.4	256.2	256.2	548.4	974.1	262.9	260.1	228.7	250.4	69.5	70.6	69.8	69.7	229.90	30.26	6962.10
2006/11/16	22:25:00	1213.8	920.6	277.5	295.2	256.1	256.2	547.5	1098.7	263.2	260.5	228.7	250.4	69.0	70.6	70.6	69.9	228.80	30.16	6900.61
2006/11/16	22:26:00	1215.1	920.1	277.5	295.2	255.7	256.2	549.1	1048.8	262.9	260.4	228.8	250.5	69.7	69.8	70.6	69.9	230.10	30.26	6962.83
2006/11/16	22:27:00	1214.5	924.6	277.3	295.6	256.2	256.4	547.3	838.0	262.4	260.1	229.0	250.5	69.1	70.0	69.9	68.8	230.00	30.29	6966.70
2006/11/16	22:28:00	1213.6	923.9	277.2	295.4	256.1	256.2	547.9	838.0	262.4	260.4	229.0	250.7	68.8	69.1	69.8	69.5	230.20	30.28	6970.46
2006/11/16	22:29:00	1213.9	923.4	277.4	295.2	255.3	256.4	546.8	1025.0	261.9	260.4	229.0	250.7	70.2	69.3	70.0	69.5	230.20	30.29	6977.36
2006/11/16	22:30:00	1215.6	920.9	277.4	295.4	255.4	256.4	547.1	1067.5	262.7	260.4	228.7	250.5	69.3	70.4	70.6	70.0	230.10	30.30	6974.33
2006/11/16	22:31:00	1214.8	923.0	277.4	295.2	255.9	256.2	547.3	1053.8	261.9	260.6	228.7	250.5	69.3	69.9	70.6	70.0	230.10	30.30	6974.33
2006/11/16	22:32:00	1214.7	920.7	277.4	296.2	255.1	256.4	547.8	936.0	262.7	260.2	228.7	250.4	68.8	69.6	70.1	69.5	230.20	30.29	6975.06
2006/11/16	22:33:00	1214.3	924.6	277.4	295.7	254.9	256.1	547.8	988.6	262.2	260.2	228.8	250.4	69.3	69.1	70.0	69.5	230.20	30.29	6975.06
2006/11/16	22:34:00	1213.6	922.4	277.4	294.9	255.1	256.2	548.4	987.6	262.4	260.2	228.7	250.4	68.6	69.8	70.1	69.3	230.10	30.27	6972.03
2006/11/16	22:35:00	1214.8	923.2	277.4	294.8	255.4	256.2	549.2	1044.2	262.7	260.3	228.5	250.4	69.1	70.2	70.1	69.5	230.20	30.30	6975.06
2006/11/16	22:36:00	1214.9	922.7	277.4	294.6	255.6	256.7	546.8	1049.8	262.4	260.3	228.5	250.4	68.6	69.7	70.1	70.2	230.10	30.29	6972.03
2006/11/16	22:37:00	1215.1	920.1	277.4	295.2	255.1	256.2	547.3	1009.4	261.9	260.4	228.3	250.4	68.8	70.3	70.2	70.2	229.90	30.26	6956.77
2006/11/16	22:38:00	1213.9	924.4	277.5	296.2	255.4	256.7	548.7	1092.4	262.6	260.3	228.5	250.4	69.5	69.7	70.0	70.1	230.10	30.28	6970.46
2006/11/16	22:39:00	1213.6	921.3	277.5	296.1	256.2	256.7	547.4	1036.1	262.4	260.4	228.5	250.4	69.7	69.7	70.3	70.2	230.00	30.16	6936.80
2006/11/16	22:40:00	1213.9	919.4	277.5	295.9	256.2	256.2	547.5	945.3	262.4	260.5	228.5	250.4	70.0	69.9	70.3	70.3	229.20	30.17	6914.96
2006/11/16	22:41:00	1214.8	924.6	277.5	296.1	255.4	256.2	548.0	1042.6	262.7	260.8	228.7	250.4	69.8	70.2	70.3	69.7	229.80	30.28	6958.34
2006/11/16	22:42:00	1214.5	922.1	277.5	296.4	255.6	256.4	547.3	1013.7	262.9	260.4	228.7	250.4	69.7	70.2	69.0	69.5	230.10	30.29	6969.73
2006/11/16	22:43:00	1213.9	921.8	277.6	296.1	255.7	256.4	548.3	1083.4	262.7	260.5	228.7	250.5	68.8	69.7	69.1	69.7	230.10	30.28	6969.73
2006/11/16	22:44:00	1214.0	923.8	277.6	295.2	255.4	255.9	548.4	1125.4	262.4	260.5	229.0	250.5	69.1	70.3	70.6	69.8	230.10	30.29	6972.03
2006/11/16	22:45:00	1214.1	922.9	277.7	295.1	255.9	256.7	548.9	1126.7	263.2	260.5	229.0	250.7	69.5	70.2	71.3	70.4	230.20	30.29	6972.76

Heat Rise Test
1st Run

Date	Time	TC1	TC2	TC3	TC4	TC5	TC6	TC7	TC8	TC9	TC10	TC11	TC12	TC13	TC14	TC15	TC16	VDC	Amps	Watts
2006/11/16	22:46:00	1213.8	922.0	277.7	294.7	255.2	256.5	549.1	1043.8	263.0	260.5	229.0	250.5	69.7	69.7	70.1	70.1	230.10	30.29	6969.73
2006/11/16	22:47:00	1213.7	921.7	277.7	296.2	255.4	255.9	548.3	1020.4	262.7	260.6	229.0	250.5	69.5	69.9	70.3	70.1	230.10	30.29	6969.73
2006/11/16	22:48:00	1214.5	919.7	277.6	295.2	255.3	256.5	548.4	1095.2	262.6	260.4	228.7	250.7	69.5	69.9	69.9	69.1	230.10	30.29	6972.03
2006/11/16	22:49:00	1213.8	920.2	277.6	294.9	255.6	256.1	546.5	1110.3	262.7	260.5	228.8	250.7	68.8	69.8	69.5	70.2	230.10	30.29	6969.73
2006/11/16	22:50:00	1214.8	919.1	277.6	295.9	254.9	256.4	548.8	1066.9	262.1	260.1	229.0	250.7	69.8	70.2	69.5	70.2	230.10	30.29	6969.73
2006/11/16	22:51:00	1214.7	920.1	277.6	294.9	255.7	256.2	547.7	1050.9	263.4	260.4	229.0	250.7	70.0	69.6	70.3	70.4	230.10	30.27	6965.13
2006/11/16	22:52:00	1214.4	923.1	277.6	295.9	255.6	256.4	548.7	969.4	262.7	260.4	229.0	250.7	69.5	70.1	70.4	70.1	230.10	30.27	6968.15
2006/11/16	22:53:00	1214.4	922.4	277.6	295.2	255.6	256.4	548.3	1115.9	262.7	260.4	228.8	250.7	69.3	69.3	70.4	70.1	230.00	30.26	6959.80
2006/11/16	22:54:00	1214.6	922.3	277.7	295.9	255.7	256.5	547.4	1126.9	262.2	260.4	229.0	250.7	69.5	69.5	70.2	69.1	230.10	30.29	6969.73
2006/11/16	22:55:00	1214.1	922.7	277.6	295.2	255.9	256.5	547.4	1134.7	263.2	260.6	229.0	250.7	69.1	70.2	70.2	70.4	229.80	30.22	6947.58
2006/11/16	22:56:00	1213.9	923.5	277.6	295.7	256.2	256.4	548.2	1000.6	262.4	260.4	229.0	250.7	69.1	70.1	69.9	69.8	230.00	30.29	6966.70
2006/11/16	22:57:00	1214.0	922.0	277.7	296.0	255.9	256.7	548.2	1006.2	262.9	260.5	229.0	250.7	68.6	70.0	69.8	70.0	230.10	30.29	6972.03
2006/11/16	22:58:00	1214.4	921.1	277.6	296.4	255.9	256.1	547.8	1160.2	263.2	260.3	229.0	250.7	69.1	69.3	69.9	70.1	230.00	30.27	6964.40
2006/11/16	22:59:00	1214.2	920.9	277.7	295.4	255.7	255.7	548.8	1163.7	263.2	260.5	229.0	250.7	68.8	70.3	69.1	69.8	230.00	30.29	6966.70
2006/11/16	23:00:00	1214.9	919.4	277.6	295.6	255.4	256.4	548.8	1159.7	263.0	260.5	228.8	250.7	69.1	69.6	69.1	69.6	230.10	30.29	6969.73
2006/11/16	23:01:00	1215.1	921.0	277.7	295.2	255.7	256.4	548.8	1162.4	262.6	260.4	228.7	250.7	69.3	69.1	70.6	70.1	230.20	30.29	6972.76
2006/11/16	23:02:00	1215.4	920.7	277.7	294.7	255.7	256.4	547.6	1179.2	262.4	260.3	228.7	250.5	69.1	67.7	69.8	69.3	229.50	30.19	6928.61
2006/11/16	23:03:00	1214.6	919.7	277.7	295.9	254.9	256.2	547.7	1085.7	261.2	259.7	229.0	250.5	68.8	67.0	69.9	67.6	230.10	30.26	6962.83
2006/11/16	23:04:00	1215.0	919.7	277.5	295.2	254.7	256.1	548.4	1142.0	261.7	259.6	229.0	250.5	68.8	66.6	69.5	67.3	230.10	30.29	6969.73
2006/11/16	23:05:00	1214.2	922.7	277.8	295.2	255.2	256.2	547.6	949.0	261.8	259.6	229.0	250.5	69.1	67.1	70.0	67.5	230.10	30.29	6972.03
2006/11/16	23:06:00	1214.2	921.5	277.8	295.9	255.1	256.2	547.6	1072.0	261.8	259.7	228.7	250.5	68.6	67.3	69.6	67.3	230.10	30.29	6969.73
2006/11/16	23:07:00	1215.1	922.0	277.8	294.7	254.7	256.2	548.7	1098.7	261.8	259.6	228.7	250.4	68.8	66.6	69.6	67.8	230.10	30.29	6972.03
2006/11/16	23:08:00	1214.2	924.6	277.7	295.4	254.7	256.4	550.2	951.9	261.7	259.5	228.8	250.5	68.8	67.2	69.8	67.9	230.10	30.28	6970.46
2006/11/16	23:09:00	1214.3	922.6	277.8	295.7	254.7	256.2	548.4	993.1	261.6	259.3	228.7	250.5	69.0	66.6	69.9	67.3	230.20	30.29	6972.76
2006/11/16	23:10:00	1214.4	922.6	277.8	295.9	255.1	255.7	547.9	1146.9	261.4	259.3	228.7	250.4	68.8	67.0	69.1	66.8	230.20	30.29	6975.06
2006/11/16	23:11:00	1213.8	918.9	277.7	296.1	254.9	256.1	547.2	1143.0	261.9	259.2	228.7	250.4	68.4	66.1	69.1	67.0	230.20	30.29	6972.76
2006/11/16	23:12:00	1213.6	921.6	277.8	295.6	255.1	256.4	548.6	1136.4	262.2	259.2	228.7	250.4	68.6	66.8	69.1	67.5	230.10	30.30	6972.03
2006/11/16	23:13:00	1214.0	923.5	277.7	295.1	255.7	256.1	548.7	1098.9	262.4	259.4	228.8	250.5	69.1	67.3	70.0	68.2	230.10	30.29	6972.76
2006/11/16	23:14:00	1213.2	922.6	277.9	295.7	256.1	256.1	548.4	998.0	262.1	259.4	228.8	250.4	69.3	67.2	69.6	67.9	230.20	30.29	6972.76
2006/11/16	23:15:00	1214.1	923.3	277.9	294.7	255.2	256.5	549.2	1007.8	261.9	259.1	228.7	250.5	69.3	68.1	70.4	67.8	230.20	30.29	6972.76
2006/11/16	23:16:00	1213.7	920.5	277.9	295.9	255.4	256.4	547.6	1022.3	261.6	259.4	228.7	250.5	69.1	68.3	70.0	68.8	230.10	30.29	6969.73
2006/11/16	23:17:00	1214.6	919.7	277.9	295.2	255.4	256.2	547.2	1094.7	261.6	259.2	228.8	250.5	69.7	67.1	70.0	68.6	230.10	30.29	6969.73
2006/11/16	23:18:00	1214.9	921.1	277.9	295.9	255.6	256.4	549.2	1103.4	261.6	258.9	228.8	250.7	69.0	67.3	69.9	67.3	230.10	30.29	6969.73
2006/11/16	23:19:00	1214.4	921.5	277.8	296.0	255.6	256.4	549.1	1094.0	261.6	259.0	228.7	250.5	68.8	68.6	69.9	67.9	230.10	30.29	6969.73
2006/11/16	23:20:00	1215.0	922.6	277.8	294.8	254.8	256.4	548.0	1103.1	261.9	258.8	228.7	250.5	69.1	67.8	69.5	68.6	230.10	30.29	6972.03
2006/11/16	23:21:00	1214.8	918.5	277.8	295.9	254.8	255.7	549.7	1000.8	261.4	259.0	228.7	250.4	68.6	66.8	69.6	68.2	230.10	30.29	6972.03
2006/11/16	23:22:00	1214.1	922.0	277.9	295.9	254.8	256.1	547.2	949.3	261.4	258.9	228.5	250.5	69.0	66.8	69.6	68.0	230.10	30.29	6972.03
2006/11/16	23:23:00	1214.3	920.8	277.6	296.0	255.6	256.2	548.8	1166.4	261.9	259.2	228.7	250.4	68.6	69.0	69.6	68.1	230.20	30.28	6970.46
2006/11/16	23:24:00	1214.1	923.2	277.8	295.6	255.4	256.7	548.9	971.6	261.7	259.4	228.7	250.4	69.0	68.2	69.9	69.0	230.10	30.29	6969.73
2006/11/16	23:25:00	1215.1	919.6	278.0	295.9	256.2	256.4	547.8	1078.1	261.9	259.2	228.7	250.4	69.3	68.2	70.2	68.2	230.20	30.29	6972.76
2006/11/16	23:26:00	1213.8	921.1	278.0	294.9	254.9	256.4	548.0	1184.5	262.6	259.1	228.7	250.4	69.0	67.8	69.9	68.6	230.10	30.29	6972.03
2006/11/16	23:27:00	1213.5	921.4	277.8	294.6	254.7	256.2	548.0	931.4	261.9	259.1	228.5	250.4	68.6	67.1	69.3	68.0	230.10	30.29	6969.73
2006/11/16	23:28:00	1213.6	922.9	277.9	296.1	255.4	255.9	549.4	992.8	261.4	259.0	228.7	250.4	69.0	66.8	69.3	67.8	230.10	30.29	6972.76
2006/11/16	23:29:00	1213.6	920.2	278.0	296.0	255.4	256.5	548.9	999.0	261.4	258.9	228.7	250.4	69.6	68.3	69.8	68.1	230.20	30.29	6972.76
2006/11/16	23:30:00	1215.4	919.7	277.8	295.2	255.7	257.0	548.0	1061.0	262.1	259.0	228.5	250.4	69.6	68.4	70.2	68.6	230.10	30.29	6969.73
2006/11/16	23:31:00	1214.8	921.4	278.1	294.7	254.9	256.5	548.4	998.5	261.6	259.0	228.5	250.4	69.6	68.3	70.0	68.8	230.10	30.29	6972.03
2006/11/16	23:32:00	1214.1	922.9	278.0	295.4	254.7	256.7	548.2	1124.2	261.4	259.1	228.7	250.4	69.6	68.0	69.6	68.4	230.10	30.29	6972.03
2006/11/16	23:33:00	1214.0	922.9	278.0	296.0	254.0	256.7	548.9	983.0	262.1	259.2	228.7	250.4	69.3	68.0	69.8	68.3	230.10	30.29	6969.73
2006/11/16	23:34:00	1214.4	922.0	278.2	294.9	255.7	257.2	548.9	1188.3	261.9	259.0	228.5	250.4	68.6	67.5	70.0	68.2	228.70	30.13	6890.73
2006/11/16	23:35:00	1214.8	921.2	278.0	295.9	255.9	256.7	548.4	1179.1	261.9	259.4	228.7	250.5	68.6	68.3	69.9	68.8	229.40	30.18	6926.31
2006/11/16	23:36:00	1215.0	922.6	278.2	295.9	254.9	256.9	548.9	1157.2	261.7	259.0	228.7	250.5	68.6	67.1	69.6	68.3	229.20	30.18	6917.26
2006/11/16	23:37:00	1214.8	922.9	278.1	295.9	254.7	257.0	548.8	1073.1	262.1	259.3	228.8	250.5	69.0	67.5	69.9	67.7	229.20	30.22	6926.42
2006/11/16	23:38:00	1214.7	921.6	278.1	295.6	255.9	257.2	547.4	1066.2	261.8	258.9	228.7	250.5	68.8	68.8	70.0	68.4	230.10	30.29	6972.03
2006/11/16	23:39:00	1214.3	923.6	278.2	295.2	255.9	256.9	548.9	1010.8	262.4	259.4	228.7	250.7	68.8	68.6	69.7	69.1	230.20	30.29	6972.76
2006/11/16	23:40:00	1214.4	923.2	278.3	295.9	256.9	256.5	548.9	1101.4	262.2	259.4	228.7	250.5	69.3	68.6	70.0	69.1	229.80	30.23	6952.90
2006/11/16	23:41:00	1214.2	921.7	278.3	296.0	256.4	257.0	549.1	1004.0	262.9	258.9	228.7	250.5	68.6	68.6	70.0	68.6	229.50	30.22	6935.49

Heat Rise Test
1st Run

Date	Time	TC1	TC2	TC3	TC4	TC5	TC6	TC7	TC8	TC9	TC10	TC11	TC12	TC13	TC14	TC15	TC16	VDC	Amps	Watts
2006/11/16	23:42:00	1213.7	919.9	278.2	296.5	255.4	256.7	547.9	993.8	262.2	259.2	228.7	250.7	68.8	67.3	69.7	67.9	230.10	30.26	6968.88
2006/11/16	23:43:00	1214.3	920.2	278.3	296.6	255.4	256.7	549.2	989.5	261.9	259.1	228.8	250.7	68.8	67.6	69.8	67.6	229.10	30.17	6916.53
2006/11/16	23:44:00	1214.2	923.2	278.0	295.7	254.7	256.9	548.8	1177.1	262.7	259.2	228.7	250.7	68.4	69.0	69.9	68.1	230.10	30.28	6970.46
2006/11/16	23:45:00	1213.9	922.1	278.1	296.4	255.9	257.2	548.2	1171.2	261.9	259.6	228.7	250.7	68.0	69.1	69.5	68.2	229.60	30.29	6954.58
2006/11/16	23:46:00	1214.3	920.1	278.0	296.1	255.3	256.4	549.2	1167.7	262.4	259.7	228.7	250.7	68.6	69.0	69.1	68.1	229.00	30.15	6908.93
2006/11/16	23:47:00	1214.3	924.0	278.0	296.2	255.9	256.7	548.2	1063.7	261.9	259.9	228.8	250.7	69.0	68.2	69.3	68.1	230.10	30.28	6967.43
2006/11/16	23:48:00	1214.9	919.1	278.2	295.7	255.6	256.5	547.7	1074.0	262.2	259.3	228.7	250.7	69.1	67.6	70.1	68.2	229.50	30.27	6965.13
2006/11/16	23:49:00	1214.6	921.5	278.1	294.9	255.3	256.9	549.5	998.5	261.9	259.4	229.0	250.7	68.8	68.4	70.0	68.2	230.10	30.29	6969.73
2006/11/16	23:50:00	1215.0	920.4	278.2	294.1	256.1	257.2	547.4	1084.5	262.2	259.7	228.8	250.7	69.8	69.8	70.3	69.1	230.00	30.27	6966.70
2006/11/16	23:51:00	1214.8	920.6	278.1	295.4	255.4	256.9	548.4	1057.1	262.4	260.1	228.7	250.5	69.0	69.8	69.6	69.0	230.20	30.29	6975.06
2006/11/16	23:52:00	1214.4	923.1	278.2	295.6	255.7	256.7	547.4	1004.5	262.9	260.0	228.5	250.7	68.3	69.6	69.8	68.8	230.00	30.26	6959.80
2006/11/16	23:53:00	1214.2	920.8	278.0	295.6	255.4	257.2	548.2	1001.3	261.9	259.6	228.7	250.5	68.8	68.6	70.1	68.6	229.90	30.26	6959.80
2006/11/16	23:54:00	1213.7	919.1	278.2	295.4	256.1	257.2	549.4	994.1	262.4	259.6	228.7	250.5	69.6	68.3	70.1	68.2	230.10	30.29	6972.76
2006/11/16	23:55:00	1213.6	919.6	278.0	295.4	255.4	257.2	548.2	1100.2	261.9	259.6	228.8	250.7	69.3	69.1	69.1	68.6	230.00	30.27	6964.40
2006/11/16	23:56:00	1214.2	919.4	278.1	294.9	255.4	257.4	548.4	1090.8	262.4	259.6	228.7	250.5	68.6	69.0	69.3	69.0	229.90	30.25	6965.97
2006/11/16	23:57:00	1214.6	921.3	278.2	295.1	255.4	257.0	548.4	1026.0	262.2	259.8	228.7	250.7	69.0	69.0	69.6	68.8	230.10	30.29	6969.73
2006/11/16	23:58:00	1214.0	921.3	278.2	295.9	255.7	257.2	548.0	1088.2	262.6	260.1	228.7	250.7	69.0	68.8	69.5	69.1	230.00	30.29	6966.70
2006/11/16	23:59:00	1214.4	921.2	278.2	295.9	256.7	257.4	548.7	1043.3	261.9	260.3	228.7	250.7	68.8	68.8	70.0	69.3	230.10	30.29	6969.73
2006/11/17	00:00:00	1213.8	919.7	278.2	295.9	256.4	257.0	547.3	1065.3	262.4	260.0	228.8	250.7	69.1	69.3	70.3	69.7	230.00	30.29	6971.30
2006/11/17	00:01:00	1214.3	919.1	278.2	294.9	255.4	257.4	548.6	1040.8	262.7	259.7	228.8	250.7	69.1	68.8	70.1	69.6	230.20	30.29	6972.76
2006/11/17	00:02:00	1214.9	921.1	278.2	295.6	255.1	257.2	548.4	1008.5	262.2	259.5	229.0	250.8	69.1	68.8	70.0	69.0	230.20	30.29	6975.06
2006/11/17	00:03:00	1214.9	918.1	278.2	294.6	255.6	257.2	546.2	1100.1	262.1	259.3	228.8	250.8	69.3	69.1	70.3	69.1	230.10	30.29	6974.33
2006/11/17	00:04:00	1214.0	922.6	278.3	295.2	256.7	257.0	547.3	995.7	262.4	259.3	229.2	250.9	69.8	69.1	70.4	69.1	230.10	30.28	6970.46
2006/11/17	00:05:00	1214.3	921.3	278.2	293.6	254.9	257.4	548.7	987.3	262.6	259.6	228.8	250.9	69.8	68.6	70.6	69.7	230.10	30.26	6962.83
2006/11/17	00:06:00	1214.6	921.3	278.4	295.6	254.4	257.2	549.2	1073.1	262.2	259.6	229.0	250.8	69.5	67.8	70.2	68.8	230.00	30.26	6962.83
2006/11/17	00:07:00	1213.9	919.6	278.3	296.0	254.9	256.9	548.7	962.7	262.4	259.5	228.8	250.8	69.3	68.8	69.5	68.8	230.10	30.28	6970.46
2006/11/17	00:08:00	1213.9	920.8	278.4	295.2	256.2	257.2	549.5	951.9	262.7	259.6	229.0	250.7	69.5	69.8	70.6	69.6	230.10	30.28	6967.43
2006/11/17	00:09:00	1215.1	918.6	278.4	294.8	256.4	257.4	548.4	1052.7	261.9	259.3	229.0	250.7	69.7	68.8	70.2	69.6	230.20	30.29	6972.76
2006/11/17	00:10:00	1214.2	923.5	278.3	295.6	256.2	257.2	549.7	938.8	262.6	259.4	229.0	250.7	69.3	68.8	69.9	69.1	230.10	30.24	6961.25
2006/11/17	00:11:00	1214.6	918.3	278.5	295.9	255.3	257.2	549.9	1005.2	261.8	259.6	229.0	250.7	69.3	67.3	69.9	68.6	229.80	30.28	6958.34
2006/11/17	00:12:00	1214.4	921.6	278.3	296.1	255.2	256.9	549.7	1000.0	262.4	259.4	229.0	250.7	68.8	68.3	69.3	68.8	230.20	30.29	6972.76
2006/11/17	00:13:00	1215.4	922.1	278.5	295.1	255.9	257.0	548.4	1063.2	262.2	259.5	229.0	250.7	69.6	67.9	70.2	67.9	230.20	30.30	6975.06
2006/11/17	00:14:00	1214.8	925.4	278.5	295.9	255.9	257.2	548.3	1045.5	261.9	259.6	229.0	250.7	69.8	69.0	70.4	68.6	230.20	30.29	6975.06
2006/11/17	00:15:00	1214.6	917.1	278.6	294.9	255.6	257.4	548.6	1068.0	262.4	259.5	229.0	250.8	69.3	69.1	70.4	69.3	230.20	30.29	6975.06
2006/11/17	00:16:00	1214.4	923.5	278.5	295.4	255.7	256.7	549.4	1024.5	262.1	259.7	229.2	250.9	69.5	68.4	70.8	69.1	230.00	30.23	6952.90
2006/11/17	00:17:00	1214.2	922.6	278.4	295.9	254.9	257.2	547.4	1014.5	261.9	259.8	228.8	250.8	69.0	69.3	70.1	69.3	230.10	30.28	6967.43
2006/11/17	00:18:00	1214.0	923.0	278.5	295.6	254.7	257.4	548.3	934.2	262.7	260.1	228.8	250.8	68.8	68.8	70.1	69.3	230.20	30.29	6972.76
2006/11/17	00:19:00	1213.7	922.9	278.4	296.4	255.3	257.7	549.2	1045.8	262.6	259.9	229.0	250.7	69.3	68.6	70.4	69.0	228.90	30.17	6905.91
2006/11/17	00:20:00	1214.3	922.4	278.6	295.9	255.2	257.2	548.9	902.1	262.2	259.7	229.0	250.7	69.1	68.8	70.4	69.0	230.00	30.28	6966.70
2006/11/17	00:21:00	1215.1	922.7	278.5	294.6	256.1	257.4	548.3	1026.3	262.2	259.5	229.0	250.8	69.5	69.0	70.3	69.3	229.80	30.26	6953.75
2006/11/17	00:22:00	1214.6	922.0	278.6	295.4	255.1	257.4	548.3	974.9	262.4	259.5	229.0	250.7	69.3	69.3	69.6	68.6	230.00	30.27	6962.10
2006/11/17	00:23:00	1213.6	923.3	278.4	295.2	255.9	257.5	549.5	1058.4	262.7	259.6	229.0	250.7	69.3	68.8	69.3	68.6	230.10	30.29	6969.73
2006/11/17	00:24:00	1213.7	921.3	278.5	295.2	256.2	257.4	548.7	1067.7	262.4	259.7	228.8	250.7	69.1	68.8	70.2	69.0	230.10	30.29	6969.73
2006/11/17	00:25:00	1214.4	920.4	278.6	295.4	256.5	257.7	547.8	1065.3	262.2	260.0	228.8	250.7	69.0	68.3	69.8	69.3	229.90	30.28	6963.67
2006/11/17	00:26:00	1214.5	921.0	278.4	295.2	255.2	257.0	548.7	984.3	262.2	259.9	229.0	250.7	69.1	68.4	69.5	69.1	230.10	30.28	6970.46
2006/11/17	00:27:00	1214.1	922.4	278.6	295.4	255.4	257.4	549.9	991.3	261.9	259.6	229.2	250.7	69.9	69.0	69.9	68.8	230.00	30.27	6962.10
2006/11/17	00:28:00	1215.4	923.0	278.7	295.2	255.9	257.2	549.1	1119.7	262.1	259.7	229.2	250.8	70.0	68.3	70.3	68.6	230.20	30.26	6965.85
2006/11/17	00:29:00	1214.4	922.9	278.8	296.2	255.6	257.2	549.4	1136.9	262.7	259.8	229.2	250.9	70.0	68.3	70.2	68.6	230.20	30.29	6975.06
2006/11/17	00:30:00	1214.1	923.8	278.7	295.9	255.4	257.4	549.7	968.6	262.7	259.8	229.3	251.0	69.6	68.6	70.4	68.8	230.10	30.29	6972.76
2006/11/17	00:31:00	1213.6	921.6	278.7	295.6	255.7	257.4	548.9	949.0	262.4	259.6	229.3	251.0	69.6	67.8	70.1	69.1	230.10	30.29	6972.76
2006/11/17	00:32:00	1213.9	921.4	278.6	296.4	255.3	257.5	547.7	1006.2	262.2	259.2	229.2	250.9	69.7	68.6	70.3	68.2	230.00	30.29	6966.70
2006/11/17	00:33:00	1214.8	923.0	278.7	295.1	255.9	257.4	548.6	940.2	262.4	259.5	229.2	250.9	69.8	68.4	70.6	69.3	230.10	30.29	6972.03
2006/11/17	00:34:00	1214.4	920.6	278.9	295.7	255.3	257.5	549.2	938.4	262.2	259.7	229.2	250.9	69.6	68.4	70.4	69.0	230.00	30.29	6966.70
2006/11/17	00:35:00	1214.5	920.5	278.6	294.4	255.4	256.9	547.5	1088.1	262.2	259.2	229.2	250.9	69.7	67.8	69.8	67.9	230.20	30.28	6975.06
2006/11/17	00:36:00	1214.7	922.6	278.6	295.9	255.2	257.7	549.4	991.6	262.7	259.8	229.0	250.9	69.0	69.1	70.6	68.6	230.10	30.28	6972.03
2006/11/17	00:37:00	1214.4	921.8	278.7	295.4	255.9	257.7	549.4	1120.7	262.7	259.9	229.2	251.0	69.3	69.0	70.6	69.6	230.20	30.29	6975.06

Heat Rise Test
1st Run

Date	Time	TC1	TC2	TC3	TC4	TC5	TC6	TC7	TC8	TC9	TC10	TC11	TC12	TC13	TC14	TC15	TC16	VDC	Amps	Watts
2006/11/17	00:38:00	1214.9	922.4	278.9	295.2	256.2	257.7	548.9	1143.2	262.7	259.6	229.2	251.0	70.0	69.1	70.8	69.7	230.00	30.26	6959.80
2006/11/17	00:39:00	1214.9	921.4	278.8	295.4	256.4	257.8	550.7	1142.2	262.4	260.0	229.0	251.2	69.3	69.5	70.4	69.9	230.00	30.28	6969.73
2006/11/17	00:40:00	1215.6	921.5	278.8	295.9	255.3	257.8	548.9	1143.0	262.2	259.6	229.5	251.2	69.7	69.0	69.8	69.5	229.90	30.28	6963.67
2006/11/17	00:41:00	1215.0	919.7	278.9	295.9	255.9	258.0	547.5	1214.1	262.2	259.7	229.2	251.2	69.6	69.0	70.4	69.6	230.10	30.28	6969.73
2006/11/17	00:42:00	1214.4	921.5	278.7	296.4	255.7	257.5	549.2	968.1	262.4	259.8	229.3	251.2	69.5	68.0	70.6	68.3	230.20	30.29	6975.06
2006/11/17	00:43:00	1214.7	924.4	278.9	296.1	255.4	257.8	548.9	976.8	262.9	259.8	229.5	251.0	69.5	68.0	70.3	68.8	230.10	30.29	6972.03
2006/11/17	00:44:00	1214.6	922.1	278.9	296.6	255.4	257.8	548.6	942.1	262.9	260.0	229.2	251.0	70.3	69.3	70.8	69.7	230.10	30.29	6969.73
2006/11/17	00:45:00	1213.9	923.1	278.9	296.0	255.6	257.8	549.7	945.9	262.6	259.9	229.3	251.2	69.6	68.8	70.6	69.3	230.10	30.28	6970.46
2006/11/17	00:46:00	1214.1	922.0	278.9	295.4	255.7	257.2	547.8	956.5	261.9	259.8	229.3	251.2	69.6	68.1	70.0	69.1	230.10	30.29	6969.73
2006/11/17	00:47:00	1215.2	920.0	278.9	296.4	255.7	257.2	549.2	1033.4	262.2	259.5	229.3	251.2	69.9	68.1	70.1	68.8	230.10	30.28	6967.43
2006/11/17	00:48:00	1214.4	924.1	278.9	295.6	255.4	256.9	549.7	926.2	261.9	259.4	229.5	251.2	69.9	68.0	70.3	68.6	230.20	30.29	6975.06
2006/11/17	00:49:00	1213.8	924.3	279.1	296.9	255.9	257.4	550.2	945.5	262.4	259.7	229.5	251.2	70.0	68.0	70.3	68.8	230.20	30.29	6972.76
2006/11/17	00:50:00	1214.4	922.6	278.9	296.9	255.6	257.5	549.2	1034.0	262.4	259.4	229.2	251.2	69.6	68.6	70.6	69.0	230.20	30.30	6975.06
2006/11/17	00:51:00	1214.0	920.4	278.9	295.9	255.7	257.8	549.7	1061.0	262.4	259.5	229.2	251.2	69.9	68.2	70.6	68.6	230.20	30.29	6972.76
2006/11/17	00:52:00	1214.2	923.6	278.9	295.7	255.7	258.2	550.0	1105.5	262.4	259.6	229.2	251.2	69.5	68.4	69.8	68.6	230.20	30.28	6970.46
2006/11/17	00:53:00	1214.4	922.3	278.9	296.0	256.9	257.8	550.3	1097.3	262.4	259.6	229.2	251.2	69.7	68.2	69.9	69.3	230.20	30.29	6975.06
2006/11/17	00:54:00	1215.5	922.9	278.9	295.4	256.9	258.2	549.9	975.2	262.7	259.8	229.2	251.2	69.8	69.1	70.4	69.3	230.20	30.27	6974.21
2006/11/17	00:55:00	1213.9	922.7	278.9	295.6	256.4	257.9	550.3	906.3	263.0	259.9	229.5	251.3	69.8	69.6	70.9	69.9	230.20	30.28	6970.46
2006/11/17	00:56:00	1214.6	921.4	279.1	296.4	257.0	257.8	549.7	982.7	262.4	259.9	229.5	251.2	70.0	69.0	71.1	69.6	230.20	30.29	6975.06
2006/11/17	00:57:00	1214.6	922.1	278.9	296.8	255.9	257.7	550.3	936.4	262.2	260.1	229.3	251.2	69.9	69.0	70.4	69.0	230.20	30.29	6975.06
2006/11/17	00:58:00	1214.4	920.7	279.1	295.6	255.7	257.7	549.9	1085.9	262.4	260.1	229.2	251.2	68.8	70.4	70.6	68.8	230.10	30.29	6974.33
2006/11/17	00:59:00	1213.9	923.7	278.9	296.5	255.7	257.7	549.5	970.8	262.4	259.8	229.5	251.2	70.2	68.6	70.1	69.5	230.20	30.29	6975.79
2006/11/17	01:00:00	1213.3	922.4	278.9	295.7	255.3	257.9	550.2	953.8	262.1	259.7	229.3	251.2	70.1	68.1	70.6	68.1	230.20	30.29	6972.76
2006/11/17	01:01:00	1214.5	922.6	278.9	295.7	254.9	257.7	548.3	1188.4	262.9	259.8	229.2	251.2	70.2	69.3	70.6	68.1	230.10	30.26	6971.90
2006/11/17	01:02:00	1214.0	921.1	278.9	295.7	256.4	257.8	550.2	1179.2	262.9	260.4	229.2	251.2	69.7	69.6	70.3	69.5	230.10	30.28	6967.43
2006/11/17	01:03:00	1215.2	920.1	279.1	295.6	256.2	257.7	549.7	1165.7	262.9	259.9	229.0	251.2	69.5	68.3	70.6	69.5	230.00	30.27	6962.10
2006/11/17	01:04:00	1215.2	919.9	279.1	295.2	256.5	257.9	549.4	1083.2	262.4	260.0	229.3	251.4	69.5	69.5	71.3	69.0	230.20	30.29	6972.76
2006/11/17	01:05:00	1214.7	919.7	279.2	295.4	256.2	257.9	547.9	932.4	262.9	260.0	229.3	251.4	69.6	69.3	70.8	69.6	230.20	30.29	6975.06
2006/11/17	01:06:00	1213.6	922.1	279.1	296.4	256.1	258.5	549.4	927.0	262.4	260.2	229.3	251.4	70.3	69.8	71.1	69.6	230.20	30.26	6965.85
2006/11/17	01:07:00	1214.1	923.1	279.3	295.4	256.4	257.7	550.2	927.6	262.9	260.4	229.5	251.4	70.0	69.1	70.6	69.9	230.00	30.28	6964.40
2006/11/17	01:08:00	1214.8	921.6	279.3	296.9	256.1	258.2	548.1	922.9	263.2	260.3	229.7	251.5	70.1	69.7	70.8	69.5	230.20	30.29	6975.06
2006/11/17	01:09:00	1214.3	923.5	279.2	296.2	256.2	258.2	549.7	1055.0	263.2	260.1	229.7	251.6	70.1	68.8	70.9	69.1	230.20	30.29	6975.06
2006/11/17	01:10:00	1214.5	924.1	279.3	296.4	255.1	258.2	549.9	925.3	263.4	260.4	229.7	251.6	69.8	69.3	70.0	70.0	230.20	30.29	6975.79
2006/11/17	01:11:00	1214.0	918.5	279.2	296.4	255.7	258.0	550.5	925.3	262.1	260.3	229.5	251.6	69.1	69.1	70.1	70.0	230.20	30.29	6972.76
2006/11/17	01:12:00	1214.7	922.0	279.4	296.4	255.9	257.7	550.0	1076.2	262.4	260.3	229.6	251.6	70.4	68.4	70.8	69.1	230.20	30.30	6975.06
2006/11/17	01:13:00	1214.9	921.1	279.4	295.9	256.2	258.2	549.5	934.4	263.2	260.0	229.5	251.5	70.0	68.8	71.3	69.3	230.10	30.27	6965.13
2006/11/17	01:14:00	1214.3	921.3	279.3	296.0	256.5	257.7	549.2	914.7	263.0	260.7	229.5	251.5	69.3	68.6	70.1	69.3	230.30	30.30	6978.09
2006/11/17	01:15:00	1213.7	921.1	279.4	295.9	255.9	257.7	550.8	940.3	262.9	260.4	229.7	251.5	69.9	69.8	70.8	69.5	230.20	30.29	6975.06
2006/11/17	01:16:00	1214.5	922.3	279.4	295.9	256.7	258.5	549.9	1062.3	263.4	260.3	229.7	251.6	70.1	69.7	70.8	70.0	230.20	30.26	6971.90
2006/11/17	01:17:00	1214.1	923.5	279.4	295.9	256.4	257.9	550.2	949.8	262.9	260.3	229.7	251.6	69.3	69.8	70.8	70.0	230.20	30.29	6972.76
2006/11/17	01:18:00	1214.0	924.0	279.2	296.1	256.9	258.2	549.2	895.6	263.5	260.2	229.7	251.5	69.3	70.2	71.5	69.7	230.10	30.28	6969.73
2006/11/17	01:19:00	1214.2	922.3	279.3	296.4	257.4	257.9	550.3	1122.0	262.7	260.4	229.6	251.5	69.5	70.2	70.8	69.8	230.20	30.29	6972.76
2006/11/17	01:20:00	1214.5	921.4	279.3	295.6	256.2	257.9	550.3	1046.0	262.6	260.8	229.6	251.5	69.3	69.3	70.2	70.4	229.70	30.09	6911.67
2006/11/17	01:21:00	1214.6	920.8	279.1	296.1	256.4	257.9	550.2	924.6	262.4	260.0	229.8	251.5	70.1	69.5	70.9	69.3	229.70	30.19	6934.64
2006/11/17	01:22:00	1213.6	920.4	279.2	296.7	256.4	258.2	549.7	946.6	263.2	260.4	229.7	251.4	70.1	69.6	71.1	69.8	230.00	30.27	6962.10
2006/11/17	01:23:00	1213.5	920.6	279.4	297.2	256.2	258.2	549.9	954.3	262.2	260.6	229.7	251.5	70.1	69.1	70.4	70.1	230.20	30.29	6972.76
2006/11/17	01:24:00	1214.2	920.6	279.2	297.0	255.7	258.2	550.5	1154.4	262.2	260.1	229.6	251.6	70.2	69.1	70.0	70.0	230.10	30.28	6970.46
2006/11/17	01:25:00	1214.0	918.5	279.4	295.9	256.4	258.4	547.1	1145.9	262.9	260.5	229.6	251.6	69.8	69.9	70.8	70.4	230.20	30.27	6974.21
2006/11/17	01:26:00	1214.9	923.8	279.4	297.4	255.7	258.4	550.2	1030.3	263.5	260.7	229.8	251.6	70.2	69.3	70.9	70.2	230.20	30.29	6975.06
2006/11/17	01:27:00	1213.8	923.6	279.4	296.5	256.4	258.4	549.7	1023.8	263.2	260.7	229.8	251.6	70.3	69.3	70.6	70.2	230.00	30.26	6959.80
2006/11/17	01:28:00	1213.8	921.0	279.4	296.2	256.7	257.9	549.9	1018.9	262.9	260.2	229.8	251.6	70.4	69.1	70.8	69.6	230.20	30.30	6975.06
2006/11/17	01:29:00	1215.9	921.4	279.4	296.1	256.2	258.2	549.7	938.3	263.0	260.2	229.8	251.5	70.6	69.0	71.1	70.0	230.20	30.29	6972.76
2006/11/17	01:30:00	1215.5	919.1	279.4	295.9	255.6	258.3	548.9	941.3	262.9	260.1	229.8	251.5	69.7	68.3	70.8	69.3	229.90	30.26	6956.77
2006/11/17	01:31:00	1215.2	921.5	279.4	296.0	256.4	258.4	549.9	916.7	262.9	260.3	229.6	251.5	69.9	68.6	70.6	69.1	230.10	30.29	6969.73
2006/11/17	01:32:00	1213.7	922.6	279.4	295.4	255.9	258.7	550.7	957.8	262.7	260.4	229.8	251.5	70.4	69.6	71.3	70.0	230.20	30.29	6977.36
2006/11/17	01:33:00	1213.3	920.1	279.4	296.2	256.7	258.5	549.5	1025.6	263.4	260.2	229.5	251.6	70.3	68.8	70.8	69.5	230.20	30.30	6975.06

Heat Rise Test
1st Run

Date	Time	TC1	TC2	TC3	TC4	TC5	TC6	TC7	TC8	TC9	TC10	TC11	TC12	TC13	TC14	TC15	TC16	VDC	Amps	Watts
2006/11/17	01:34:00	1214.9	920.5	279.6	296.2	256.4	258.8	550.2	1149.6	263.0	260.4	229.7	251.6	70.0	68.3	70.6	69.1	230.20	30.29	6972.76
2006/11/17	01:35:00	1215.0	921.7	279.4	296.0	256.4	258.2	550.0	954.1	262.7	260.4	229.8	251.6	70.0	68.8	70.8	68.8	230.20	30.29	6977.36
2006/11/17	01:36:00	1213.6	920.6	279.4	296.6	256.9	258.4	550.4	964.1	262.7	260.3	229.8	251.6	70.3	69.3	70.8	69.7	230.20	30.30	6975.06
2006/11/17	01:37:00	1213.8	920.9	279.6	296.2	256.4	258.6	550.8	974.1	262.2	260.0	229.7	251.6	70.6	69.6	71.5	70.1	230.20	30.29	6977.36
2006/11/17	01:38:00	1213.1	921.1	279.4	296.1	256.4	258.8	551.1	1032.8	262.9	259.8	229.6	251.6	70.4	69.1	71.3	69.8	230.10	30.28	6967.43
2006/11/17	01:39:00	1214.7	920.4	279.4	296.1	256.1	258.2	549.9	1034.1	262.4	260.8	229.6	251.7	70.2	69.0	71.3	70.0	230.20	30.29	6975.06
2006/11/17	01:40:00	1213.7	920.2	279.4	296.8	256.1	258.5	550.0	933.6	262.6	260.5	229.6	251.6	70.1	69.0	70.3	69.9	230.30	30.29	6975.79
2006/11/17	01:41:00	1213.8	920.2	279.4	297.0	256.4	258.5	549.7	982.4	262.9	260.3	229.5	251.6	70.1	68.4	70.4	69.3	230.20	30.29	6975.06
2006/11/17	01:42:00	1214.2	920.2	279.4	296.8	256.1	258.7	548.7	1166.2	263.2	260.3	229.7	251.5	68.6	68.8	70.1	69.3	230.20	30.29	6975.06
2006/11/17	01:43:00	1214.3	924.3	279.4	296.4	256.9	258.4	550.4	1004.6	262.9	260.4	229.6	251.5	69.5	69.1	70.8	69.3	230.10	30.29	6972.03
2006/11/17	01:44:00	1214.4	921.8	279.7	296.1	256.4	258.6	549.9	1010.9	262.6	260.3	230.0	251.6	70.1	69.1	70.8	69.1	230.20	30.29	6975.06
2006/11/17	01:45:00	1215.0	922.1	279.6	295.9	256.7	258.4	548.4	1184.9	263.2	260.3	229.8	251.7	70.3	69.8	71.1	69.7	230.20	30.29	6972.76
2006/11/17	01:46:00	1214.8	921.8	279.4	296.8	256.5	258.8	549.1	1182.0	262.9	260.4	229.8	251.7	69.5	69.8	70.8	70.0	230.00	30.26	6966.70
2006/11/17	01:47:00	1216.1	921.4	279.6	295.9	256.2	258.9	549.7	1014.8	262.6	260.6	230.0	251.7	70.3	69.8	70.8	69.7	230.20	30.29	6972.76
2006/11/17	01:48:00	1214.9	923.0	279.7	296.2	256.9	258.5	549.2	1197.6	263.2	260.6	229.6	251.7	69.3	70.1	70.6	69.1	230.20	30.29	6975.79
2006/11/17	01:49:00	1215.2	923.0	279.7	296.4	256.4	258.7	549.7	1180.5	263.0	260.3	229.7	251.8	70.1	69.6	70.8	70.2	230.20	30.30	6975.06
2006/11/17	01:50:00	1213.8	922.4	279.6	295.7	255.9	258.6	548.4	1081.7	263.2	260.3	229.5	251.7	70.2	69.1	70.8	70.1	230.00	30.29	6966.70
2006/11/17	01:51:00	1213.6	922.9	279.6	296.5	256.9	258.6	550.4	989.4	263.5	260.7	229.7	251.7	69.9	69.3	70.8	69.7	230.20	30.28	6973.48
2006/11/17	01:52:00	1213.7	923.7	279.6	297.0	256.4	258.4	549.7	1081.0	263.2	260.5	229.5	251.6	70.4	69.0	70.6	69.7	230.20	30.29	6975.79
2006/11/17	01:53:00	1214.0	922.0	279.7	296.1	255.7	258.4	549.9	1041.2	262.4	260.4	229.6	251.7	69.3	68.3	70.6	68.8	230.20	30.29	6972.76
2006/11/17	01:54:00	1214.1	917.5	279.4	295.4	255.9	258.3	549.4	1155.9	262.7	260.0	229.5	251.6	68.6	67.7	70.4	68.6	230.20	30.29	6975.06
2006/11/17	01:55:00	1215.0	920.4	279.4	296.4	256.2	258.5	547.9	961.9	262.9	260.2	229.3	251.6	69.0	68.2	70.2	68.6	230.20	30.29	6972.76
2006/11/17	01:56:00	1214.5	922.3	279.6	294.7	256.2	258.2	549.2	1024.3	263.4	260.3	229.5	251.6	70.0	69.3	71.1	69.3	230.20	30.30	6975.06
2006/11/17	01:57:00	1214.5	921.1	279.4	296.2	255.7	258.7	548.4	1059.2	262.7	260.9	229.6	251.6	69.7	69.3	70.4	68.4	230.20	30.29	6972.76
2006/11/17	01:58:00	1215.2	920.0	279.6	296.4	255.9	258.7	550.7	1045.8	262.2	260.3	229.7	251.6	70.0	69.6	70.6	69.3	230.20	30.29	6972.76
2006/11/17	01:59:00	1213.9	919.9	279.7	296.1	256.4	258.4	549.7	962.7	262.9	260.4	229.7	251.6	69.8	69.0	70.9	70.1	230.20	30.29	6975.06
2006/11/17	02:00:00	1214.9	922.7	279.7	296.7	256.4	258.6	549.7	1106.7	263.5	260.9	229.6	251.6	69.1	69.1	70.4	69.5	230.20	30.30	6975.06
2006/11/17	02:01:00	1214.9	921.0	279.7	296.4	256.4	258.6	548.1	1301.7	263.5	260.9	229.7	251.7	69.8	68.6	70.6	69.1	230.20	30.29	6975.06
2006/11/17	02:02:00	1214.6	922.9	279.7	295.6	256.2	258.3	549.9	1006.3	262.7	260.4	230.0	251.7	70.3	67.8	70.8	68.6	230.20	30.29	6975.06
2006/11/17	02:03:00	1215.1	920.6	279.7	295.6	256.2	258.2	549.7	1200.8	262.1	260.0	229.7	251.8	70.0	69.1	70.8	68.0	230.20	30.30	6977.36
2006/11/17	02:04:00	1214.4	922.9	279.3	297.0	256.2	258.2	547.4	1038.5	262.9	260.2	230.0	251.8	70.3	70.0	70.8	68.4	230.20	30.29	6972.76
2006/11/17	02:05:00	1213.6	922.9	279.7	295.4	257.5	258.3	550.2	1010.9	263.4	260.6	230.0	251.8	70.6	70.3	71.1	69.7	230.20	30.29	6972.76
2006/11/17	02:06:00	1214.4	922.1	279.7	296.0	257.5	258.7	549.2	1120.9	263.8	260.6	229.8	251.8	70.9	70.0	71.3	69.6	230.20	30.29	6972.76
2006/11/17	02:07:00	1215.7	920.6	279.9	295.1	257.9	258.6	549.2	1257.9	263.8	260.6	230.0	251.8	70.6	70.4	71.5	69.6	230.10	30.30	6974.33
2006/11/17	02:08:00	1215.6	920.1	280.1	296.0	257.4	258.8	549.9	1091.2	264.2	260.7	230.0	251.9	70.9	70.4	71.6	70.1	230.20	30.29	6975.06
2006/11/17	02:09:00	1214.7	921.6	279.9	296.2	257.5	259.1	549.4	1072.1	264.2	260.9	230.0	251.9	70.8	70.8	71.6	70.4	230.20	30.30	6975.06
2006/11/17	02:10:00	1214.5	922.9	279.9	296.5	257.5	258.9	550.5	1281.5	263.4	260.7	230.0	251.9	70.9	70.6	71.8	70.4	230.10	30.29	6972.03
2006/11/17	02:11:00	1214.3	922.1	280.1	296.4	257.8	258.6	549.7	1141.0	264.0	260.7	229.8	251.9	70.9	70.6	71.6	70.2	230.20	30.29	6975.06
2006/11/17	02:12:00	1214.7	921.6	280.1	295.7	257.5	258.6	549.9	1171.5	263.8	260.6	230.0	251.9	70.8	70.2	71.3	70.0	230.10	30.29	6972.03
2006/11/17	02:13:00	1214.4	922.6	279.9	296.4	256.4	258.8	550.4	1146.6	263.2	260.6	230.0	251.9	70.6	70.3	71.3	70.3	230.10	30.29	6969.73
2006/11/17	02:14:00	1214.4	921.1	280.1	297.4	256.9	258.8	549.1	1080.7	263.2	260.8	230.2	251.9	70.6	70.2	71.1	69.6	230.20	30.29	6975.06
2006/11/17	02:15:00	1213.6	921.2	280.1	296.4	256.7	258.8	550.2	1215.6	263.4	260.6	230.1	251.9	70.8	70.4	71.5	70.2	230.20	30.29	6975.06
2006/11/17	02:16:00	1213.5	920.7	280.1	296.2	257.2	258.9	550.5	996.8	263.4	260.6	230.0	251.9	70.8	70.0	71.6	70.2	230.20	30.29	6972.76
2006/11/17	02:17:00	1215.4	923.8	280.1	296.1	256.7	258.5	549.5	1203.7	263.2	260.6	230.0	251.9	70.8	69.8	71.3	69.9	230.20	30.29	6975.06
2006/11/17	02:18:00	1215.4	918.5	279.9	295.2	257.8	258.6	550.2	1168.0	263.7	260.4	229.8	251.9	70.1	69.6	71.1	69.7	230.20	30.29	6972.76
2006/11/17	02:19:00	1215.0	919.3	280.1	297.2	257.2	258.7	549.7	1129.5	263.2	260.7	230.0	251.9	70.4	70.2	71.7	70.0	230.20	30.29	6972.76
2006/11/17	02:20:00	1215.1	920.4	280.1	296.2	257.5	258.9	550.2	1222.6	263.0	260.3	230.1	251.9	70.6	70.2	71.6	69.8	230.10	30.27	6965.13
2006/11/17	02:21:00	1214.8	921.9	279.9	296.5	257.0	258.5	550.2	1295.6	263.2	260.6	230.0	251.9	70.6	69.6	71.1	69.9	230.20	30.29	6975.79
2006/11/17	02:22:00	1214.4	921.1	279.9	295.9	257.7	258.8	549.9	1003.1	263.4	260.5	230.2	251.9	71.1	70.0	71.1	70.0	230.00	30.26	6959.80
2006/11/17	02:23:00	1213.9	923.0	280.1	296.9	256.9	258.8	550.5	1124.2	263.4	260.7	230.1	252.0	70.8	70.1	71.3	70.4	230.20	30.30	6977.36
2006/11/17	02:24:00	1213.6	922.3	280.1	296.5	257.4	258.8	550.3	1076.0	263.2	260.6	230.2	252.0	70.6	69.7	71.3	69.8	230.20	30.29	6975.06
2006/11/17	02:25:00	1213.8	919.1	280.1	296.6	256.7	258.7	549.9	935.6	263.2	260.5	230.2	252.1	70.8	70.3	71.5	69.7	230.20	30.30	6975.06
2006/11/17	02:26:00	1214.2	920.9	279.9	296.5	257.2	258.8	549.5	989.3	263.4	260.3	230.1	252.1	70.6	68.8	70.8	69.1	230.20	30.29	6975.79
2006/11/17	02:27:00	1214.1	922.4	279.9	296.6	256.9	258.4	551.6	838.7	262.7	260.6	230.1	252.1	70.1	68.6	70.9	68.6	230.20	30.29	6975.06
2006/11/17	02:28:00	1214.1	923.0	279.9	297.0	256.9	258.3	549.7	846.7	263.2	260.3	230.3	252.0	70.2	69.6	70.8	68.6	230.10	30.29	6969.73
2006/11/17	02:29:00	1214.1	922.9	280.2	294.9	257.2	258.7	548.8	1192.9	263.7	260.5	230.3	252.1	70.4	69.3	70.8	69.7	230.30	30.29	6975.79

Heat Rise Test
1st Run

Date	Time	TC1	TC2	TC3	TC4	TC5	TC6	TC7	TC8	TC9	TC10	TC11	TC12	TC13	TC14	TC15	TC16	VDC	Amps	Watts
2006/11/17	02:30:00	1214.7	923.8	280.2	296.6	257.4	258.9	549.7	1194.1	263.7	260.8	230.2	252.1	70.6	70.2	71.1	70.0	230.20	30.30	6977.36
2006/11/17	02:31:00	1214.6	920.7	280.2	296.5	257.7	258.5	550.0	942.2	263.4	260.6	230.1	252.1	70.6	69.3	71.1	69.6	230.30	30.29	6978.09
2006/11/17	02:32:00	1214.1	922.6	280.2	297.4	256.9	258.6	550.7	1113.7	263.2	260.8	230.4	252.1	70.9	69.3	71.7	69.6	230.30	30.29	6975.79
2006/11/17	02:33:00	1214.0	921.6	280.1	296.8	256.4	258.8	550.3	1151.6	262.9	260.7	230.4	252.1	70.3	70.6	70.8	70.3	230.20	30.29	6972.76
2006/11/17	02:34:00	1213.6	921.3	280.4	297.1	257.2	258.9	550.2	933.7	263.4	260.0	230.1	252.1	70.6	69.3	71.1	69.3	230.20	30.29	6972.76
2006/11/17	02:35:00	1212.6	921.4	280.2	297.3	256.7	259.2	550.4	1178.9	263.9	260.5	230.3	252.1	70.4	69.9	71.8	70.2	230.30	30.30	6978.09
2006/11/17	02:36:00	1212.8	919.3	280.4	296.9	256.9	259.1	549.5	909.0	263.4	260.7	230.2	252.1	70.4	70.2	71.5	70.2	230.20	30.29	6977.36
2006/11/17	02:37:00	1214.0	923.8	280.2	297.5	257.2	259.1	549.2	893.4	262.9	260.5	230.4	252.1	70.0	69.6	71.3	69.8	230.20	30.29	6972.76
2006/11/17	02:38:00	1215.6	921.1	280.4	295.9	258.0	258.8	549.9	1221.6	263.7	260.6	230.4	252.2	71.1	69.8	71.3	69.7	230.20	30.29	6977.36
2006/11/17	02:39:00	1214.7	923.1	280.4	297.0	257.2	259.1	550.2	1145.9	264.0	260.8	230.4	252.2	70.4	69.3	71.1	70.2	230.30	30.29	6975.79
2006/11/17	02:40:00	1214.4	920.9	280.4	296.9	257.9	259.1	550.7	991.4	263.2	260.7	230.4	252.2	70.4	69.1	70.8	69.1	230.20	30.29	6975.79
2006/11/17	02:41:00	1213.8	922.0	280.4	295.4	257.8	259.1	549.9	1010.3	263.4	260.5	230.5	252.3	70.8	69.3	71.3	69.1	230.30	30.29	6978.09
2006/11/17	02:42:00	1213.8	921.2	280.4	296.4	256.1	258.8	549.7	1304.2	263.4	260.9	230.2	252.2	70.8	70.1	71.1	70.1	230.20	30.29	6977.36
2006/11/17	02:43:00	1214.6	923.1	280.4	295.7	256.9	258.9	549.7	1300.8	262.7	260.6	230.4	252.2	70.8	68.8	71.1	69.0	230.20	30.30	6975.06
2006/11/17	02:44:00	1215.2	924.4	280.4	296.4	256.7	259.2	549.9	902.7	263.2	260.4	230.5	252.2	70.4	69.1	70.6	69.0	230.30	30.30	6978.09
2006/11/17	02:45:00	1215.1	921.5	280.2	296.4	256.2	258.4	549.9	1042.9	263.8	260.4	230.1	252.2	70.8	68.8	70.9	69.5	230.20	30.30	6977.36
2006/11/17	02:46:00	1215.4	919.9	280.4	295.6	256.1	258.4	550.4	923.4	262.4	260.5	230.5	252.2	70.2	68.6	70.6	68.3	230.30	30.29	6975.79
2006/11/17	02:47:00	1214.9	920.6	280.2	296.4	256.2	258.6	549.9	1028.9	262.7	260.4	230.5	252.3	69.9	68.8	70.4	68.1	230.20	30.30	6977.36
2006/11/17	02:48:00	1214.6	923.3	280.2	296.6	256.9	258.6	550.0	1038.5	263.4	260.5	230.5	252.3	70.1	69.0	70.4	68.6	230.20	30.30	6975.06
2006/11/17	02:49:00	1214.5	921.5	280.4	295.6	256.9	259.2	549.9	961.2	263.2	260.7	230.3	252.2	70.6	70.1	71.3	69.8	230.20	30.30	6975.06
2006/11/17	02:50:00	1215.1	921.5	280.2	295.9	257.4	259.6	550.3	1243.1	263.2	260.7	230.3	252.2	69.8	69.7	71.1	70.3	230.20	30.30	6975.06
2006/11/17	02:51:00	1214.3	924.3	280.4	296.5	257.5	259.1	550.2	1145.9	264.0	260.8	230.4	252.2	70.1	69.3	71.1	69.5	230.20	30.30	6975.06
2006/11/17	02:52:00	1213.5	919.9	280.4	296.9	256.4	258.8	550.7	1111.8	262.9	260.7	230.3	252.2	70.4	68.6	70.6	68.4	230.20	30.29	6975.79
2006/11/17	02:53:00	1213.6	922.0	280.2	297.2	256.4	258.0	551.2	1160.4	262.9	260.4	230.6	252.3	70.3	68.4	70.4	68.4	230.20	30.29	6975.79
2006/11/17	02:54:00	1214.4	921.2	280.4	297.2	256.2	258.9	548.4	1253.8	262.6	260.5	230.5	252.3	70.3	68.0	70.9	68.8	230.20	30.29	6975.06
2006/11/17	02:55:00	1214.5	919.0	280.4	297.0	255.7	258.2	551.0	1016.0	262.7	260.4	230.7	252.3	69.8	68.0	70.4	68.3	230.20	30.29	6972.76
2006/11/17	02:56:00	1215.4	919.9	280.2	295.6	256.2	258.5	550.8	1040.2	262.9	260.1	230.5	252.3	69.8	67.9	70.3	68.4	230.20	30.30	6977.36
2006/11/17	02:57:00	1214.5	922.6	280.4	296.2	255.9	258.5	550.9	1069.2	263.0	260.4	230.4	252.2	70.4	68.0	70.6	68.6	230.20	30.29	6977.36
2006/11/17	02:58:00	1215.7	919.4	280.4	296.8	256.4	258.6	549.5	1155.7	262.9	260.4	230.6	252.2	70.3	68.2	70.6	68.4	230.20	30.29	6972.76
2006/11/17	02:59:00	1214.6	920.9	280.4	296.7	256.7	258.6	549.4	1057.2	262.7	260.1	230.4	252.2	70.1	68.6	70.4	68.1	230.20	30.29	6972.76
2006/11/17	03:00:00	1215.2	921.5	280.7	297.0	257.7	259.2	549.9	1065.7	263.5	260.4	230.4	252.2	69.9	68.3	70.3	68.8	230.20	30.29	6975.79
2006/11/17	03:01:00	1215.9	921.0	280.5	295.9	256.9	259.1	550.2	925.4	263.9	260.6	230.4	252.2	70.3	69.6	71.1	69.3	230.20	30.29	6975.79
2006/11/17	03:02:00	1215.0	922.6	280.5	296.4	256.4	259.3	549.2	943.8	263.2	260.7	230.5	252.2	70.6	68.8	71.3	69.5	230.20	30.29	6975.06
2006/11/17	03:03:00	1214.5	922.6	280.5	295.9	256.5	258.8	549.4	1115.2	262.9	260.2	230.5	252.2	70.4	69.0	70.6	68.6	230.20	30.29	6975.06
2006/11/17	03:04:00	1214.3	921.4	280.5	297.4	256.4	258.6	550.0	1014.5	263.4	260.6	230.5	252.2	70.8	69.6	70.6	69.1	230.20	30.29	6975.79
2006/11/17	03:05:00	1214.7	921.9	280.7	297.6	257.2	259.4	550.2	1026.2	264.0	260.6	230.4	252.3	70.6	70.0	70.8	69.5	230.20	30.30	6977.36
2006/11/17	03:06:00	1214.3	922.1	280.5	296.1	257.2	259.3	549.7	1122.5	263.5	260.7	230.5	252.2	70.8	69.1	70.8	68.8	230.20	30.29	6975.06
2006/11/17	03:07:00	1214.0	922.6	280.7	297.1	256.7	259.1	547.8	951.2	263.8	260.8	230.5	252.3	70.3	68.8	70.9	69.1	230.20	30.29	6975.06
2006/11/17	03:08:00	1213.6	921.7	280.4	296.7	256.4	259.0	549.9	1040.3	262.9	260.7	230.5	252.3	70.2	68.8	70.8	68.6	230.20	30.29	6972.76
2006/11/17	03:09:00	1214.4	922.1	280.4	296.1	256.4	258.5	550.2	1181.8	262.7	260.1	230.6	252.3	70.2	68.8	70.8	68.0	230.20	30.29	6972.76
2006/11/17	03:10:00	1215.1	918.6	280.5	296.5	256.2	259.0	550.8	1192.9	263.4	260.4	230.6	252.2	69.7	68.1	70.2	68.2	230.20	30.29	6975.06
2006/11/17	03:11:00	1214.6	918.6	280.7	296.5	256.5	258.9	549.9	1154.7	263.0	260.0	230.3	252.2	70.1	68.6	70.8	68.6	230.20	30.29	6975.06
2006/11/17	03:12:00	1215.4	920.0	280.7	297.4	256.4	258.8	550.0	924.6	263.0	260.5	230.6	252.3	69.8	69.0	70.6	68.6	230.20	30.29	6972.76
2006/11/17	03:13:00	1214.4	919.0	280.5	297.5	257.2	259.1	550.8	947.3	264.3	260.7	230.5	252.3	70.3	69.3	70.8	69.3	230.20	30.29	6972.76
2006/11/17	03:14:00	1214.8	921.2	280.4	296.5	256.7	258.6	550.3	1143.9	262.9	260.5	230.5	252.3	70.6	68.3	70.2	68.3	230.20	30.29	6975.06
2006/11/17	03:15:00	1213.6	922.1	280.7	297.0	256.4	258.8	550.7	1167.8	262.7	260.6	230.8	252.3	70.1	68.8	70.2	68.1	230.20	30.29	6975.06
2006/11/17	03:16:00	1214.9	921.4	280.7	297.6	257.2	259.0	549.9	1193.6	263.2	260.7	230.8	252.4	69.8	68.8	70.6	69.0	230.20	30.29	6975.06
2006/11/17	03:17:00	1214.5	922.9	280.7	297.2	257.0	259.1	550.8	1051.3	263.8	260.4	230.7	252.4	70.4	68.6	70.8	68.8	230.20	30.29	6975.06
2006/11/17	03:18:00	1213.6	921.3	280.4	298.1	256.5	259.0	550.7	1026.1	262.9	260.6	230.7	252.4	70.4	68.2	70.8	68.4	230.20	30.29	6972.76
2006/11/17	03:19:00	1214.6	919.0	280.7	297.0	256.4	258.4	550.5	1269.1	263.0	260.5	230.7	252.3	69.7	67.9	70.3	68.1	230.20	30.29	6972.76
2006/11/17	03:20:00	1214.8	923.9	280.7	297.5	256.9	259.1	550.8	954.1	263.0	260.4	230.6	252.3	69.9	68.2	70.8	68.6	230.20	30.28	6970.46
2006/11/17	03:21:00	1214.7	923.0	280.5	296.8	256.5	258.2	548.6	1267.8	262.9	260.3	230.7	252.3	69.9	68.3	70.3	68.3	230.10	30.27	6965.13
2006/11/17	03:22:00	1214.9	918.0	280.9	296.6	257.4	259.1	549.9	902.6	263.7	260.4	230.5	252.3	70.1	68.3	70.3	68.8	230.20	30.29	6975.06
2006/11/17	03:23:00	1215.2	920.7	280.9	296.8	256.7	259.0	549.2	1086.4	263.4	260.3	230.6	252.3	70.1	68.8	71.1	68.8	230.10	30.30	6972.03
2006/11/17	03:24:00	1216.1	918.2	280.9	296.4	256.7	259.4	550.0	913.7	263.0	260.8	230.6	252.3	70.2	68.8	70.9	69.3	230.20	30.30	6977.36
2006/11/17	03:25:00	1214.5	922.0	280.7	297.0	256.5	259.0	549.7	982.6	263.2	260.7	230.7	252.3	70.2	67.9	70.8	68.6	230.20	30.29	6972.76

Heat Rise Test
1st Run

Date	Time	TC1	TC2	TC3	TC4	TC5	TC6	TC7	TC8	TC9	TC10	TC11	TC12	TC13	TC14	TC15	TC16	VDC	Amps	Watts
2006/11/17	03:26:00	1214.6	923.4	280.7	296.7	256.9	259.0	549.2	1032.5	263.7	260.6	230.7	252.4	70.0	67.9	70.8	68.8	230.20	30.29	6975.06
2006/11/17	03:27:00	1214.7	920.4	280.7	295.7	256.9	259.3	549.7	947.1	262.7	260.3	230.7	252.3	70.2	68.2	70.6	68.8	230.20	30.29	6975.79
2006/11/17	03:28:00	1214.9	920.7	280.7	296.8	257.2	259.3	550.5	1139.7	263.7	260.3	230.6	252.3	69.9	68.6	70.6	68.6	230.20	30.29	6975.06
2006/11/17	03:29:00	1214.0	923.4	280.7	297.6	256.7	259.6	550.2	1013.0	263.2	260.7	230.6	252.2	70.3	68.4	70.3	68.8	230.20	30.29	6975.06
2006/11/17	03:30:00	1214.4	922.0	280.7	296.7	256.7	259.6	548.9	1107.7	263.4	260.8	230.7	252.3	70.6	69.7	70.6	69.1	230.20	30.29	6975.06
2006/11/17	03:31:00	1214.0	921.6	280.7	296.9	257.2	259.4	551.4	962.9	263.2	260.4	230.6	252.2	70.8	68.4	70.8	69.6	230.20	30.29	6975.06
2006/11/17	03:32:00	1214.7	922.6	280.9	296.4	256.2	259.0	551.2	1015.8	263.2	260.5	230.6	252.4	69.7	67.8	70.2	68.4	230.20	30.29	6975.79
2006/11/17	03:33:00	1214.0	923.2	280.9	296.6	256.4	258.8	548.3	1188.3	262.9	260.6	230.7	252.3	69.7	67.8	70.0	68.4	230.00	30.26	6959.80
2006/11/17	03:34:00	1214.1	921.9	280.9	297.0	256.4	259.2	550.2	964.4	263.0	260.6	230.7	252.3	70.4	68.2	70.3	68.6	230.20	30.29	6975.06
2006/11/17	03:35:00	1213.7	922.1	280.7	297.4	256.5	259.0	549.9	1098.4	263.0	260.6	230.9	252.3	70.0	68.3	70.2	68.3	230.10	30.30	6972.03
2006/11/17	03:36:00	1214.4	921.1	280.7	296.9	256.4	259.1	550.5	1120.9	262.9	260.2	230.6	252.3	70.3	68.1	70.1	68.4	230.20	30.29	6977.36
2006/11/17	03:37:00	1215.2	919.4	280.9	296.5	256.5	259.0	551.4	1027.8	262.4	260.3	230.6	252.3	69.7	68.1	69.9	68.2	230.20	30.29	6975.06
2006/11/17	03:38:00	1215.1	922.1	280.9	297.1	256.4	258.8	551.2	998.8	263.0	260.4	230.7	252.3	69.8	68.6	70.4	68.6	230.20	30.29	6975.79
2006/11/17	03:39:00	1213.5	923.3	280.9	296.1	256.5	259.6	550.2	1123.4	263.4	260.4	230.5	252.3	70.3	68.8	70.8	68.8	230.20	30.29	6975.79
2006/11/17	03:40:00	1213.8	921.1	280.9	296.9	256.9	259.3	552.2	973.6	263.8	260.7	230.4	252.3	70.4	69.1	70.9	69.5	230.20	30.30	6977.36
2006/11/17	03:41:00	1214.3	920.6	280.9	297.1	257.5	259.6	551.2	998.8	263.0	260.5	230.6	252.3	70.1	68.4	70.8	69.0	230.20	30.29	6975.06
2006/11/17	03:42:00	1214.4	919.7	280.7	297.0	256.9	259.5	550.4	1152.8	263.4	260.5	230.5	252.3	70.2	68.8	70.6	69.7	230.20	30.29	6975.79
2006/11/17	03:43:00	1214.7	919.0	281.0	296.2	256.4	259.3	550.2	1309.3	263.2	260.5	230.8	252.4	70.2	67.8	70.4	68.6	230.20	30.29	6975.79
2006/11/17	03:44:00	1214.3	921.3	280.7	297.2	256.4	258.9	550.2	1014.9	262.9	260.4	230.9	252.4	69.7	67.5	70.3	68.4	230.20	30.29	6975.06
2006/11/17	03:45:00	1214.2	925.1	280.9	296.1	256.5	258.6	550.9	1018.9	262.9	260.3	230.9	252.4	70.0	67.8	70.6	68.2	230.20	30.29	6975.06
2006/11/17	03:46:00	1215.0	922.1	280.7	297.1	256.4	258.9	549.7	1023.1	262.7	260.5	231.0	252.4	69.9	68.2	70.6	67.9	230.20	30.29	6975.79
2006/11/17	03:47:00	1215.1	919.4	280.9	297.4	256.5	259.0	550.9	910.6	263.2	260.5	230.9	252.4	69.8	68.8	70.3	67.9	230.20	30.30	6977.36
2006/11/17	03:48:00	1214.1	921.2	280.9	296.8	257.2	259.9	549.7	970.8	263.4	260.5	230.5	252.3	70.2	68.2	70.8	68.8	230.20	30.30	6975.06
2006/11/17	03:49:00	1214.4	919.9	280.9	296.9	256.2	259.4	550.2	1160.7	263.2	260.2	230.6	252.3	70.2	68.0	70.2	68.3	230.20	30.29	6977.36
2006/11/17	03:50:00	1214.1	919.7	280.9	297.4	256.1	259.3	550.8	1218.2	263.4	260.3	230.7	252.4	69.8	68.6	70.2	68.4	230.20	30.30	6977.36
2006/11/17	03:51:00	1214.4	920.5	281.0	297.7	256.4	259.0	551.1	984.8	263.2	260.4	230.8	252.4	69.9	68.0	70.6	68.6	230.20	30.29	6975.79
2006/11/17	03:52:00	1214.4	920.7	280.4	297.4	256.9	259.8	550.5	1003.4	263.0	260.3	230.8	252.4	70.4	68.0	70.6	68.1	230.20	30.30	6975.06
2006/11/17	03:53:00	1214.4	921.2	281.2	297.1	257.4	259.8	548.7	1373.7	263.7	260.3	230.7	252.3	70.0	68.8	70.8	68.4	230.20	30.29	6975.79
2006/11/17	03:54:00	1214.6	922.0	280.7	297.7	256.5	259.8	550.7	1178.9	264.2	260.8	230.7	252.3	70.1	69.7	70.9	69.1	230.20	30.29	6975.79
2006/11/17	03:55:00	1214.1	921.5	281.0	296.7	256.5	259.8	550.8	946.3	263.2	260.4	230.7	252.3	70.1	68.8	70.8	69.3	230.20	30.29	6975.06
2006/11/17	03:56:00	1213.6	922.7	280.9	297.4	256.9	259.8	549.4	1196.3	264.0	260.7	230.7	252.3	70.2	69.0	69.9	69.1	230.20	30.29	6975.06
2006/11/17	03:57:00	1214.4	921.6	281.0	297.4	257.7	259.6	551.6	990.0	264.3	260.9	230.8	252.3	70.0	69.1	70.8	69.3	230.20	30.29	6975.06
2006/11/17	03:58:00	1214.4	921.2	281.2	297.4	257.5	259.7	551.8	1243.2	263.8	260.5	230.9	252.3	70.4	69.1	71.1	69.5	230.20	30.28	6970.46
2006/11/17	03:59:00	1214.2	920.9	281.2	297.1	257.5	259.6	551.2	1054.3	264.2	260.6	230.7	252.4	70.3	69.3	71.1	69.6	230.20	30.29	6975.06
2006/11/17	04:00:00	1213.3	923.1	281.2	297.5	256.5	259.5	548.9	1188.6	263.2	260.4	230.9	252.4	70.2	67.8	70.6	68.2	230.20	30.29	6975.79
2006/11/17	04:01:00	1214.5	922.1	281.2	296.9	257.0	259.0	550.9	1002.0	263.2	260.7	230.9	252.4	69.5	67.5	70.4	67.8	230.20	30.30	6975.06
2006/11/17	04:02:00	1213.6	919.7	281.2	296.7	256.7	259.0	551.4	1237.4	263.2	260.6	231.1	252.5	69.5	67.8	70.3	68.3	230.20	30.29	6975.79
2006/11/17	04:03:00	1213.6	922.9	281.0	297.3	256.7	259.4	551.7	989.9	262.9	260.3	231.0	252.5	69.9	68.0	70.4	68.0	230.20	30.30	6975.06
2006/11/17	04:04:00	1214.8	923.2	281.2	297.4	257.4	259.6	550.7	1129.9	263.4	260.6	230.9	252.4	69.7	68.8	70.3	68.3	230.20	30.29	6975.79
2006/11/17	04:05:00	1215.5	924.0	281.2	296.4	258.2	260.0	551.6	1057.5	264.3	260.7	230.9	252.4	70.4	69.3	71.1	69.3	230.20	30.29	6975.06
2006/11/17	04:06:00	1214.9	920.5	281.0	297.2	257.5	259.5	550.9	1042.0	264.2	260.9	231.0	252.4	70.6	69.3	71.1	69.3	230.20	30.29	6975.06
2006/11/17	04:07:00	1214.6	922.4	281.2	297.3	257.2	260.2	552.6	1152.2	263.7	260.9	231.0	252.4	70.2	69.1	70.8	69.6	230.20	30.29	6975.06
2006/11/17	04:08:00	1213.2	922.6	281.2	296.4	257.7	259.7	551.6	1358.2	264.4	260.8	230.8	252.4	70.1	69.1	70.8	69.3	230.20	30.29	6975.06
2006/11/17	04:09:00	1214.4	923.4	281.3	296.1	257.4	259.5	550.9	1060.7	264.2	260.7	230.9	252.4	70.1	68.4	70.6	69.3	230.20	30.29	6975.79
2006/11/17	04:10:00	1213.9	922.4	281.3	297.5	257.7	259.8	550.8	1215.4	263.9	261.1	231.2	252.4	70.2	68.8	71.1	68.8	230.20	30.29	6972.76
2006/11/17	04:11:00	1214.6	922.9	281.2	298.0	257.0	259.9	550.3	1113.3	263.2	260.9	231.2	252.5	70.1	68.6	70.8	69.3	230.20	30.29	6972.76
2006/11/17	04:12:00	1215.6	921.8	281.3	297.8	256.9	259.6	551.9	1054.5	264.2	260.9	231.2	252.5	70.2	67.7	70.4	68.8	230.20	30.29	6972.76
2006/11/17	04:13:00	1214.2	922.9	280.5	297.4	256.4	259.5	550.4	1042.0	263.2	260.8	231.2	252.5	70.1	67.5	70.6	68.2	230.10	30.28	6967.43
2006/11/17	04:14:00	1213.7	921.1	281.2	297.6	256.4	259.3	551.8	1115.6	263.2	260.6	231.2	252.6	69.7	67.7	70.0	68.0	230.20	30.29	6975.06
2006/11/17	04:15:00	1214.3	922.4	281.2	296.9	256.2	259.8	551.5	967.2	263.7	260.6	231.2	252.6	69.8	67.5	70.1	68.3	230.20	30.29	6975.06
2006/11/17	04:16:00	1214.4	923.1	281.2	298.3	256.7	259.4	551.7	1017.0	263.8	260.8	231.2	252.6	70.1	67.9	70.3	69.0	230.20	30.29	6972.76
2006/11/17	04:17:00	1214.3	923.2	281.3	296.0	256.5	259.4	549.2	1199.9	263.2	260.6	231.2	252.5	69.8	68.2	70.2	68.8	230.20	30.29	6975.06
2006/11/17	04:18:00	1214.8	920.4	281.2	297.0	257.0	259.5	549.2	1095.8	263.2	260.5	231.0	252.5	70.0	68.0	70.6	68.2	230.00	30.26	6959.80
2006/11/17	04:19:00	1215.6	920.5	281.2	297.2	256.7	258.9	551.5	1028.3	263.4	260.4	231.0	252.4	69.3	67.3	70.1	67.7	230.10	30.29	6969.73
2006/11/17	04:20:00	1214.4	921.0	281.4	297.6	256.7	259.5	551.9	1141.3	263.7	260.4	231.1	252.4	69.3	67.3	70.1	68.1	230.20	30.29	6975.06
2006/11/17	04:21:00	1214.3	921.2	281.3	297.2	256.7	259.7	551.6	1288.4	263.7	260.4	231.1	252.4	69.8	67.3	70.1	68.1	230.20	30.29	6975.06

Heat Rise Test
1st Run

Date	Time	TC1	TC2	TC3	TC4	TC5	TC6	TC7	TC8	TC9	TC10	TC11	TC12	TC13	TC14	TC15	TC16	VDC	Amps	Watts
2006/11/17	04:22:00	1214.3	921.3	281.3	296.9	257.2	259.4	552.2	1034.3	262.9	260.7	230.9	252.4	69.9	68.1	70.2	68.2	230.20	30.27	6968.15
2006/11/17	04:23:00	1214.3	921.8	281.2	296.6	257.4	260.0	551.1	1027.8	263.2	260.6	230.8	252.4	70.1	67.8	70.4	67.9	230.20	30.29	6975.06
2006/11/17	04:24:00	1214.0	922.6	281.3	297.1	257.2	259.0	551.8	1239.3	262.9	260.5	231.0	252.4	69.6	68.0	69.9	67.7	230.20	30.29	6975.06
2006/11/17	04:25:00	1214.4	923.2	281.3	297.1	256.5	259.4	548.2	1165.4	263.8	260.5	230.9	252.4	69.8	67.8	70.1	68.0	230.20	30.29	6975.06
2006/11/17	04:26:00	1214.6	920.7	281.2	297.6	256.9	259.1	551.9	1139.7	262.9	260.7	231.2	252.4	69.8	67.8	70.1	68.0	230.20	30.29	6975.06
2006/11/17	04:27:00	1213.8	920.0	281.4	297.2	256.2	259.8	552.7	1081.0	263.2	260.6	231.1	252.4	69.8	67.6	70.2	68.1	230.20	30.30	6977.36
2006/11/17	04:28:00	1214.9	919.1	281.3	296.8	257.2	259.4	551.2	1042.3	263.0	260.7	231.2	252.5	69.9	67.9	70.4	68.1	230.20	30.29	6975.06
2006/11/17	04:29:00	1214.3	919.9	281.3	297.4	257.4	259.9	550.4	1087.7	263.4	260.2	231.0	252.4	70.0	67.9	70.4	67.9	230.20	30.29	6975.06
2006/11/17	04:30:00	1214.5	919.9	281.3	296.9	256.7	259.1	552.3	1087.7	263.2	260.7	231.0	252.4	69.8	68.1	70.2	67.5	230.20	30.29	6975.06
2006/11/17	04:31:00	1213.9	923.1	281.4	298.1	256.9	259.4	551.4	1151.4	263.4	260.8	231.1	252.4	69.9	67.5	70.2	67.7	230.20	30.29	6972.76
2006/11/17	04:32:00	1214.4	922.4	281.0	298.0	256.9	259.5	552.3	1111.6	262.9	260.5	230.9	252.4	70.1	67.6	70.6	67.9	230.20	30.29	6975.06
2006/11/17	04:33:00	1213.9	923.9	281.7	297.3	256.7	260.1	552.4	1183.4	263.7	260.7	231.2	252.4	70.1	68.4	70.4	68.0	230.20	30.29	6972.76
2006/11/17	04:34:00	1214.3	921.5	281.5	297.3	256.9	260.1	552.1	1180.7	263.4	260.8	231.0	252.5	70.2	67.5	70.3	68.2	230.20	30.29	6975.06
2006/11/17	04:35:00	1214.1	921.9	281.3	296.2	256.9	259.7	549.9	1227.0	262.9	260.3	231.0	252.5	70.0	67.7	70.1	67.9	230.20	30.30	6977.36
2006/11/17	04:36:00	1213.3	919.4	281.3	296.9	256.7	259.4	549.4	1138.6	263.4	260.5	231.2	252.4	69.8	67.5	69.9	68.0	230.20	30.30	6975.06
2006/11/17	04:37:00	1213.2	919.9	281.3	297.8	256.4	259.0	552.4	1089.6	263.4	260.5	231.2	252.4	69.7	67.3	70.1	67.9	230.20	30.29	6975.79
2006/11/17	04:38:00	1214.9	923.0	281.2	297.2	256.4	259.6	552.3	1326.4	263.5	260.7	231.2	252.4	70.1	67.5	70.1	68.3	230.20	30.30	6975.06
2006/11/17	04:39:00	1214.3	922.1	281.3	297.8	256.7	259.2	550.3	1075.0	263.2	260.3	231.1	252.4	69.5	67.5	70.2	67.9	230.20	30.29	6975.06
2006/11/17	04:40:00	1214.7	923.8	281.0	297.9	257.0	259.9	552.3	1300.8	263.2	260.1	231.1	252.4	69.7	67.3	70.1	68.1	230.20	30.29	6972.76
2006/11/17	04:41:00	1214.7	921.6	281.3	297.3	256.9	259.5	551.1	1150.7	262.9	260.1	231.0	252.4	69.9	68.3	70.2	67.9	230.20	30.29	6975.06
2006/11/17	04:42:00	1215.2	921.2	281.4	297.3	256.7	259.7	551.9	1274.2	263.7	260.8	231.1	252.5	69.9	68.4	70.3	68.0	230.20	30.29	6972.76
2006/11/17	04:43:00	1214.4	922.7	281.4	297.5	257.2	260.0	549.9	1194.3	263.8	260.7	231.0	252.4	70.2	68.6	70.8	69.5	230.20	30.29	6972.76
2006/11/17	04:44:00	1213.9	923.5	281.4	297.2	256.5	259.6	552.2	1131.2	263.2	260.6	231.0	252.4	70.0	68.1	70.8	67.8	230.20	30.29	6972.76
2006/11/17	04:45:00	1213.8	925.1	281.3	297.1	256.5	258.9	551.9	1391.2	263.2	260.6	231.2	252.4	69.6	68.0	70.1	67.9	230.20	30.29	6975.06
2006/11/17	04:46:00	1214.1	921.3	281.4	296.4	256.9	259.8	551.0	1315.5	262.9	260.8	231.2	252.4	69.6	67.8	70.0	67.9	230.20	30.29	6975.06
2006/11/17	04:47:00	1214.3	923.3	281.4	297.0	256.2	259.5	552.3	1176.0	263.7	260.7	231.1	252.5	70.2	67.8	70.1	68.4	230.20	30.29	6972.76
2006/11/17	04:48:00	1213.9	920.9	281.4	297.0	257.5	260.0	550.9	1275.3	263.7	260.6	231.2	252.5	69.9	67.8	70.6	67.9	230.20	30.29	6975.06
2006/11/17	04:49:00	1214.4	921.6	281.3	296.8	256.7	260.1	552.7	1295.8	263.2	260.1	230.8	252.5	70.6	67.6	70.6	68.0	230.20	30.29	6972.76
2006/11/17	04:50:00	1215.4	923.5	281.4	297.3	257.4	259.8	550.7	1179.9	263.7	260.6	231.1	252.4	69.7	68.0	70.6	68.1	230.20	30.29	6972.76
2006/11/17	04:51:00	1215.5	921.0	281.4	297.4	257.4	260.2	550.9	1234.3	264.2	260.5	231.0	252.4	70.6	68.6	70.8	68.8	230.20	30.29	6972.76
2006/11/17	04:52:00	1214.4	920.4	281.4	297.3	257.4	259.6	550.7	1235.1	263.9	260.8	231.1	252.4	70.2	68.6	70.1	68.6	230.20	30.29	6975.06
2006/11/17	04:53:00	1214.3	920.1	281.4	296.6	257.0	259.0	551.4	1178.0	263.4	260.5	231.2	252.4	69.9	67.8	70.6	68.1	230.20	30.29	6972.76
2006/11/17	04:54:00	1214.5	921.5	281.7	297.1	256.7	259.0	551.7	1298.8	263.4	260.4	231.2	252.5	69.5	67.6	70.6	67.9	230.20	30.29	6977.36
2006/11/17	04:55:00	1213.6	923.1	281.4	297.6	256.7	260.1	550.8	1122.9	263.2	260.6	231.3	252.5	70.1	67.8	70.1	67.6	230.20	30.29	6975.79
2006/11/17	04:56:00	1213.9	918.7	281.5	297.3	257.4	259.8	550.8	1182.9	263.7	260.5	231.2	252.5	69.6	67.9	70.3	67.8	230.20	30.29	6975.79
2006/11/17	04:57:00	1214.3	921.8	281.7	297.3	257.4	260.2	552.4	1086.2	264.2	260.3	230.8	252.5	70.1	67.8	70.4	68.3	230.20	30.29	6975.79
2006/11/17	04:58:00	1214.4	921.0	281.4	296.2	257.0	259.9	551.4	1151.6	263.7	260.3	230.9	252.5	69.6	67.6	70.3	67.9	230.20	30.29	6975.06
2006/11/17	04:59:00	1215.1	921.8	281.5	296.8	256.7	259.4	551.4	1149.2	263.2	260.3	231.0	252.5	69.9	67.7	70.6	68.1	230.20	30.29	6975.06
2006/11/17	05:00:00	1214.7	922.1	281.5	297.0	256.9	259.4	550.4	1288.2	263.7	260.6	231.1	252.5	69.7	67.8	70.3	68.2	230.20	30.29	6972.76
2006/11/17	05:01:00	1215.6	924.1	281.5	296.7	256.7	260.0	551.2	1231.8	263.2	260.6	231.2	252.5	69.7	67.3	70.1	68.0	230.20	30.29	6972.76
2006/11/17	05:02:00	1214.5	922.0	281.3	296.1	256.9	259.5	551.8	1250.3	263.4	260.2	231.2	252.5	69.7	67.3	70.1	67.9	230.20	30.29	6975.06
2006/11/17	05:03:00	1214.4	922.9	281.3	297.7	256.9	259.8	551.5	1152.5	263.5	260.5	231.1	252.5	69.9	67.5	70.3	68.0	230.20	30.29	6972.76
2006/11/17	05:04:00	1214.1	923.1	281.5	297.7	257.2	259.9	552.8	1331.4	263.2	260.5	231.2	252.5	69.3	67.7	70.3	68.0	230.20	30.29	6975.06
2006/11/17	05:05:00	1213.4	920.6	281.4	297.4	256.9	259.4	551.4	1195.9	263.9	260.5	231.0	252.5	69.3	67.6	70.2	68.2	230.20	30.29	6975.06
2006/11/17	05:06:00	1214.3	922.0	281.3	297.8	256.7	259.7	551.6	1064.6	263.2	260.4	231.0	252.5	69.3	67.3	70.1	67.6	230.20	30.29	6972.76
2006/11/17	05:07:00	1215.5	920.7	281.4	296.5	256.9	259.3	551.4	1290.4	263.4	260.3	231.2	252.5	69.3	67.3	70.1	67.9	230.20	30.29	6975.06
2006/11/17	05:08:00	1214.4	923.7	281.5	297.8	256.7	260.0	551.8	1015.4	263.4	260.6	231.3	252.5	69.9	67.9	70.1	68.0	230.20	30.29	6975.79
2006/11/17	05:09:00	1213.9	921.0	281.2	296.8	256.2	259.8	552.6	1018.2	263.2	260.2	231.0	252.5	69.3	67.3	69.8	68.1	230.30	30.30	6978.09
2006/11/17	05:10:00	1215.1	918.2	281.4	296.7	256.2	259.7	551.3	1014.5	263.7	260.6	231.2	252.5	69.9	67.7	70.1	68.2	230.20	30.29	6972.76
2006/11/17	05:11:00	1214.0	920.1	281.5	297.2	256.5	259.8	551.9	1214.4	263.4	260.5	231.3	252.5	69.6	67.7	69.9	67.8	230.20	30.30	6977.36
2006/11/17	05:12:00	1214.9	918.9	281.3	297.7	256.4	259.8	551.6	1291.1	263.5	260.4	231.2	252.4	69.9	67.7	69.9	68.4	230.20	30.29	6972.76
2006/11/17	05:13:00	1214.4	919.9	281.3	297.8	256.9	260.0	551.6	1252.0	263.4	260.3	231.0	252.4	69.7	67.7	70.6	68.0	230.20	30.29	6975.79
2006/11/17	05:14:00	1214.1	919.9	281.7	297.4	256.7	259.6	552.4	1256.2	263.2	260.3	231.1	252.4	69.3	67.3	70.0	67.6	230.20	30.29	6975.79
2006/11/17	05:15:00	1214.4	923.5	281.5	297.0	257.0	259.9	551.8	1019.6	263.8	260.3	231.3	252.4	70.0	67.5	70.1	68.0	230.20	30.30	6977.36
2006/11/17	05:16:00	1216.1	919.7	281.5	297.5	256.9	259.8	550.8	985.8	262.9	260.5	231.2	252.4	69.7	68.1	70.0	67.9	230.20	30.30	6975.06
2006/11/17	05:17:00	1214.6	921.1	281.7	297.4	256.5	259.6	551.7	1026.6	263.8	260.5	231.3	252.5	69.7	67.6	70.1	68.2	230.20	30.30	6975.06

Heat Rise Test
1st Run

Date	Time	TC1	TC2	TC3	TC4	TC5	TC6	TC7	TC8	TC9	TC10	TC11	TC12	TC13	TC14	TC15	TC16	VDC	Amps	Watts
2006/11/17	05:18:00	1214.3	922.0	281.2	298.0	256.9	259.9	551.5	1092.1	263.4	260.3	231.3	252.5	70.0	67.6	70.0	68.1	230.20	30.30	6977.36
2006/11/17	05:19:00	1214.9	921.1	281.7	296.9	256.4	260.5	553.2	1117.7	263.8	260.7	231.5	252.5	69.5	67.7	69.9	67.7	230.20	30.30	6977.36
2006/11/17	05:20:00	1213.4	922.4	281.7	297.6	257.4	260.3	551.0	1126.2	263.4	260.6	231.2	252.5	69.9	67.6	70.4	68.1	230.20	30.30	6977.36
2006/11/17	05:21:00	1212.8	922.0	281.8	297.7	256.5	260.2	549.7	1166.2	263.8	260.5	231.3	252.5	69.1	67.9	70.0	67.9	230.20	30.29	6975.06
2006/11/17	05:22:00	1213.9	921.4	281.8	297.5	256.9	260.2	552.4	1103.5	263.7	260.5	231.4	252.5	69.7	67.6	70.1	67.9	230.20	30.30	6977.36
2006/11/17	05:23:00	1213.4	921.0	281.4	297.7	257.0	260.5	550.7	1087.4	263.5	260.6	231.4	252.5	69.7	67.5	70.3	67.8	230.30	30.30	6978.09
2006/11/17	05:24:00	1214.1	920.7	281.7	296.8	257.4	260.5	551.0	1144.2	263.5	260.7	231.4	252.5	70.0	67.6	70.1	68.0	230.20	30.30	6975.06
2006/11/17	05:25:00	1214.0	921.6	281.4	297.9	257.2	259.5	552.6	1178.4	263.7	260.6	231.5	252.5	69.5	67.5	70.1	67.6	230.20	30.29	6975.06
2006/11/17	05:26:00	1213.8	922.6	281.4	297.9	256.7	260.0	551.8	1145.9	263.7	260.5	231.3	252.4	70.1	67.5	70.6	68.3	230.20	30.29	6977.36
2006/11/17	05:27:00	1213.6	921.2	281.7	297.1	256.7	260.2	550.9	1200.5	263.4	260.4	231.4	252.4	69.6	67.9	70.6	67.7	230.30	30.29	6978.09
2006/11/17	05:28:00	1214.6	920.6	281.4	296.6	257.4	260.5	551.1	1161.9	263.7	260.4	231.2	252.4	69.8	67.9	70.4	67.9	230.20	30.29	6975.06
2006/11/17	05:29:00	1215.0	920.4	281.3	297.7	257.5	259.9	552.4	1153.1	263.5	260.3	231.2	252.4	69.9	67.7	70.2	67.9	230.20	30.30	6977.36
2006/11/17	05:30:00	1214.1	920.0	281.8	297.1	257.2	260.5	552.6	1233.7	264.0	260.3	230.8	252.3	69.5	68.0	70.2	68.4	230.20	30.29	6977.36
2006/11/17	05:31:00	1215.8	921.3	281.7	295.4	257.4	260.0	552.4	1281.7	263.4	260.5	231.1	252.4	69.3	67.8	69.8	67.6	230.20	30.30	6975.06
2006/11/17	05:32:00	1214.7	922.9	281.7	297.1	257.0	260.2	552.2	1181.8	263.2	260.5	231.1	252.4	69.3	68.0	69.9	67.6	230.20	30.29	6977.36
2006/11/17	05:33:00	1214.8	921.2	281.8	297.3	256.9	260.2	552.1	1162.5	263.7	260.8	231.4	252.4	69.5	67.3	69.9	67.8	230.20	30.29	6975.06
2006/11/17	05:34:00	1214.4	922.7	281.5	297.4	257.0	259.6	552.3	1195.7	263.7	260.7	231.4	252.5	69.3	67.7	70.4	67.7	230.20	30.29	6975.06
2006/11/17	05:35:00	1214.3	923.8	281.4	297.2	257.4	260.4	551.7	1145.4	263.8	260.9	231.4	252.5	69.3	67.7	70.3	67.7	230.20	30.29	6975.79
2006/11/17	05:36:00	1214.0	921.6	281.2	297.2	256.9	259.7	552.2	1126.7	263.4	260.6	231.4	252.5	69.8	67.3	70.0	67.5	230.20	30.29	6975.06
2006/11/17	05:37:00	1213.7	923.4	281.9	297.2	257.0	260.3	552.2	1320.5	263.7	260.8	231.3	252.5	69.3	67.2	69.9	67.8	230.20	30.29	6972.76
2006/11/17	05:38:00	1214.4	921.7	281.7	297.2	257.4	260.3	551.3	1085.5	263.4	260.9	231.3	252.5	69.6	67.8	69.9	67.6	230.20	30.30	6975.06
2006/11/17	05:39:00	1214.4	922.1	281.9	296.7	256.9	260.0	552.4	1072.0	263.4	260.2	231.4	252.5	69.7	67.3	70.1	67.8	230.20	30.30	6975.06
2006/11/17	05:40:00	1214.4	921.9	281.8	296.8	256.9	260.0	552.2	1127.7	263.4	260.2	231.2	252.5	69.7	67.3	70.1	67.6	230.20	30.29	6975.06
2006/11/17	05:41:00	1214.3	922.3	281.7	297.3	256.2	260.1	550.7	1017.8	264.0	260.7	231.2	252.5	69.7	67.3	70.0	67.8	230.10	30.28	6967.43
2006/11/17	05:42:00	1214.6	922.1	281.7	296.5	256.9	259.9	552.3	1100.6	263.4	260.4	231.3	252.4	69.6	67.3	69.9	67.5	230.20	30.29	6975.06
2006/11/17	05:43:00	1214.8	924.1	281.7	296.2	256.9	260.3	552.3	1308.5	263.8	260.7	231.4	252.4	70.0	67.6	70.2	68.2	230.20	30.29	6975.06
2006/11/17	05:44:00	1214.3	920.6	281.7	297.2	257.2	260.0	552.4	1233.1	263.5	260.7	231.4	252.4	69.9	69.3	70.2	67.9	230.20	30.29	6975.06
2006/11/17	05:45:00	1214.4	917.8	281.9	297.2	257.7	260.0	552.3	1156.0	264.0	260.4	231.4	252.4	69.7	67.8	70.2	67.9	230.20	30.30	6975.06
2006/11/17	05:46:00	1214.4	918.2	282.0	297.8	256.9	260.5	550.8	1117.1	263.7	260.2	231.1	252.4	69.9	67.2	70.1	67.5	230.20	30.29	6975.06
2006/11/17	05:47:00	1214.6	921.8	281.9	297.3	257.0	259.5	552.4	1155.5	263.7	260.6	231.4	252.5	69.3	67.3	69.9	67.8	230.20	30.30	6977.36
2006/11/17	05:48:00	1214.3	921.5	281.7	297.7	256.7	260.4	551.6	1165.5	264.0	260.5	231.4	252.5	69.9	67.3	70.4	68.1	227.50	29.84	6788.60
2006/11/17	05:49:00	1214.8	921.3	281.8	297.3	256.9	260.3	552.7	1045.9	263.4	260.4	231.3	252.5	69.8	67.5	69.9	67.8	230.20	30.30	6977.36
2006/11/17	05:50:00	1213.8	920.4	281.5	297.8	257.2	260.4	552.3	1025.9	263.7	260.8	231.4	252.5	70.1	67.6	69.9	68.0	230.20	30.30	6977.36
2006/11/17	05:51:00	1213.6	921.7	281.4	297.9	256.7	260.1	551.8	1103.7	263.5	260.6	231.4	252.5	69.7	67.6	69.9	67.6	230.20	30.29	6975.06
2006/11/17	05:52:00	1214.1	922.7	281.8	296.8	256.4	259.7	552.3	1177.0	263.4	260.4	231.4	252.5	69.3	67.3	69.8	67.5	230.20	30.29	6975.79
2006/11/17	05:53:00	1214.1	923.7	281.4	296.7	257.2	260.2	552.6	1160.4	263.7	260.4	231.5	252.5	69.6	67.3	69.7	67.8	230.20	30.30	6975.06
2006/11/17	05:54:00	1214.7	919.3	281.8	296.7	256.7	260.2	552.8	1091.9	263.7	260.4	231.4	252.5	69.3	67.3	69.9	67.9	230.20	30.30	6975.06
2006/11/17	05:55:00	1214.3	920.4	281.8	297.8	256.7	259.9	552.0	1091.9	263.9	260.2	231.5	252.5	69.6	67.3	69.9	68.1	230.20	30.30	6975.06
2006/11/17	05:56:00	1214.6	921.0	281.7	297.0	256.7	260.4	552.2	1306.0	263.5	260.1	231.4	252.5	69.7	67.3	69.8	67.3	230.20	30.30	6975.06
2006/11/17	05:57:00	1214.9	918.9	281.7	296.0	256.9	259.7	552.2	1081.2	263.4	260.6	231.4	252.5	69.7	69.0	69.7	67.1	230.20	30.30	6977.36
2006/11/17	05:58:00	1214.8	922.1	281.8	296.9	257.4	260.1	552.4	1015.8	263.7	260.8	231.3	252.4	69.8	67.9	70.0	67.8	230.20	30.30	6977.36
2006/11/17	05:59:00	1214.8	919.4	281.9	297.4	256.7	260.4	551.5	1020.2	263.7	260.5	231.3	252.5	69.5	67.7	69.8	67.6	230.20	30.29	6975.79
2006/11/17	06:00:00	1214.6	921.4	281.7	297.2	257.5	260.3	552.0	1020.2	263.7	260.4	231.3	252.5	69.5	68.4	69.8	67.7	230.20	30.30	6975.06
2006/11/17	06:01:00	1215.5	919.1	282.0	296.5	256.2	260.5	552.1	1052.4	264.2	260.7	231.3	252.5	69.9	68.1	70.8	68.8	230.20	30.30	6975.06
2006/11/17	06:02:00	1214.8	922.7	281.5	297.2	256.2	260.5	552.0	1053.3	263.2	260.5	231.4	252.5	69.8	67.6	69.9	67.3	230.30	30.29	6975.79
2006/11/17	06:03:00	1214.4	922.4	281.9	297.2	256.2	260.0	552.9	1185.1	263.4	260.5	231.4	252.5	69.3	68.2	69.8	67.5	230.20	30.30	6975.06
2006/11/17	06:04:00	1214.4	922.1	281.8	297.4	256.2	260.3	551.6	1093.2	263.4	260.6	231.6	252.5	69.5	67.6	69.9	67.8	230.30	30.30	6978.09
2006/11/17	06:05:00	1214.0	921.8	281.9	297.3	256.9	259.9	552.4	1163.2	263.2	260.8	231.7	252.5	69.7	67.7	69.7	67.8	230.20	30.30	6975.06
2006/11/17	06:06:00	1213.9	918.8	282.0	296.5	256.7	260.1	551.1	1047.3	264.0	260.5	231.5	252.5	69.6	67.5	69.8	68.0	230.20	30.29	6975.06
2006/11/17	06:07:00	1215.2	920.6	281.9	296.8	256.2	260.3	552.0	1062.7	263.7	260.7	231.5	252.5	69.8	67.2	70.1	67.9	230.20	30.30	6975.06
2006/11/17	06:08:00	1214.5	918.0	282.0	296.5	256.4	260.4	549.9	1071.5	263.8	260.6	231.6	252.6	69.6	67.6	70.1	67.8	230.20	30.30	6977.36
2006/11/17	06:09:00	1213.6	921.8	281.8	297.1	256.7	260.2	551.3	1154.7	263.8	260.5	231.6	252.6	69.3	67.5	69.9	67.7	230.30	30.30	6978.09
2006/11/17	06:10:00	1215.0	917.5	281.9	296.8	256.2	260.5	552.4	1156.5	263.9	260.4	231.4	252.5	69.1	67.6	69.8	67.8	230.20	30.30	6975.06
2006/11/17	06:11:00	1213.4	922.3	281.5	297.2	256.4	260.5	553.2	1042.9	263.7	261.1	231.6	252.5	69.3	67.3	70.0	67.8	230.10	30.28	6967.43
2006/11/17	06:12:00	1213.6	921.6	281.7	296.7	257.4	260.9	553.2	1142.5	263.4	260.9	231.6	252.6	69.7	68.2	69.9	67.7	230.20	30.29	6975.79
2006/11/17	06:13:00	1214.5	923.3	282.1	297.4	256.9	260.5	552.1	1070.8	264.4	261.1	231.6	252.5	69.3	67.9	70.0	68.1	230.20	30.29	6975.06

Heat Rise Test
1st Run

Date	Time	TC1	TC2	TC3	TC4	TC5	TC6	TC7	TC8	TC9	TC10	TC11	TC12	TC13	TC14	TC15	TC16	VDC	Amps	Watts
2006/11/17	06:14:00	1214.3	922.1	282.1	296.4	256.9	260.5	552.1	1025.3	263.9	260.9	231.5	252.5	70.0	67.3	70.3	68.0	230.20	30.29	6975.06
2006/11/17	06:15:00	1213.9	922.1	282.0	297.5	257.4	261.1	552.8	1140.9	264.0	260.8	231.4	252.5	70.0	68.6	70.3	68.2	230.20	30.29	6975.79
2006/11/17	06:16:00	1214.1	921.3	281.9	297.2	257.0	260.9	551.8	1051.5	264.7	260.8	231.3	252.5	70.1	69.3	70.6	68.6	230.20	30.29	6975.79
2006/11/17	06:17:00	1214.3	921.7	282.0	297.1	257.2	260.6	552.6	1086.9	264.4	260.8	231.5	252.4	70.2	68.1	70.6	68.6	230.20	30.30	6975.06
2006/11/17	06:18:00	1213.7	924.5	281.9	297.0	256.7	260.4	551.6	1173.2	263.8	260.8	231.5	252.4	69.3	67.2	69.8	67.6	230.20	30.29	6975.06
2006/11/17	06:19:00	1213.9	922.1	281.8	296.1	257.0	260.4	551.3	1174.0	263.8	260.6	231.6	252.4	69.3	68.6	69.8	67.3	230.20	30.29	6972.76
2006/11/17	06:20:00	1213.2	919.1	282.1	296.5	257.4	260.9	553.4	1105.5	263.5	260.8	231.6	252.4	70.0	67.8	70.2	68.8	230.20	30.29	6975.06
2006/11/17	06:21:00	1215.0	922.6	282.0	297.8	257.2	260.9	553.5	1107.0	264.2	260.5	231.6	252.5	69.3	67.8	70.0	68.0	230.20	30.30	6975.06
2006/11/17	06:22:00	1214.2	920.6	282.2	296.4	256.9	260.8	552.9	1142.2	264.0	260.8	231.6	252.5	69.3	67.3	69.9	68.1	230.10	30.30	6974.33
2006/11/17	06:23:00	1214.6	920.5	282.1	297.1	256.9	260.4	553.7	1088.7	263.7	260.7	231.7	252.7	69.3	67.3	69.9	68.0	230.20	30.30	6975.06
2006/11/17	06:24:00	1215.4	922.3	282.3	297.4	256.7	260.9	552.9	1133.4	264.2	261.1	231.8	252.7	69.8	67.3	70.3	68.6	230.20	30.30	6975.06
2006/11/17	06:25:00	1214.2	922.3	282.1	297.8	256.7	261.3	553.5	1085.7	264.2	261.3	231.9	252.7	69.8	69.9	70.3	68.2	230.20	30.29	6975.06
2006/11/17	06:26:00	1213.9	922.6	282.1	297.5	257.7	261.4	552.7	1144.6	264.5	261.2	231.8	252.7	69.6	69.3	70.8	68.4	230.20	30.29	6975.06
2006/11/17	06:27:00	1214.0	919.9	282.2	297.3	257.7	261.6	551.4	1136.4	265.0	261.6	231.5	252.7	69.6	69.0	71.3	69.0	230.20	30.29	6975.06
2006/11/17	06:28:00	1213.8	920.1	282.1	297.7	257.0	260.9	552.9	1075.8	264.6	261.1	231.8	252.7	70.2	68.2	70.8	68.8	230.20	30.27	6971.18
2006/11/17	06:29:00	1215.1	921.5	282.3	297.5	256.9	261.2	552.8	1229.9	264.2	261.1	231.9	252.6	70.1	68.2	70.6	68.6	230.20	30.29	6972.76
2006/11/17	06:30:00	1214.9	921.3	282.1	297.7	256.9	260.6	551.2	1105.0	264.6	261.1	231.9	252.6	70.0	68.1	70.9	68.6	230.20	30.29	6975.06
2006/11/17	06:31:00	1214.4	921.1	282.0	298.0	257.4	260.9	553.7	1096.4	264.2	260.8	232.0	252.7	69.9	68.2	70.3	68.0	230.20	30.29	6975.06
2006/11/17	06:32:00	1214.4	922.4	282.3	297.6	257.7	261.2	553.1	1067.9	264.4	260.9	231.8	252.7	70.1	68.3	70.2	68.8	230.20	30.29	6975.06
2006/11/17	06:33:00	1214.5	923.3	282.2	296.5	256.4	260.8	554.3	1077.2	264.5	260.9	231.8	252.7	70.0	68.0	70.2	68.6	230.20	30.29	6975.79
2006/11/17	06:34:00	1213.3	920.9	282.1	298.1	257.0	261.4	552.9	1147.9	264.9	261.2	231.7	252.7	69.9	69.7	70.1	68.6	230.20	30.29	6972.76
2006/11/17	06:35:00	1214.5	922.4	282.0	297.3	257.9	261.3	553.4	1012.3	265.5	261.4	231.5	252.7	69.3	69.8	70.4	69.3	230.20	30.30	6977.36
2006/11/17	06:36:00	1214.9	920.7	282.1	296.9	256.4	261.2	551.6	1079.0	264.3	260.9	231.6	252.7	70.1	68.3	70.3	68.8	230.20	30.29	6975.79
2006/11/17	06:37:00	1214.1	919.0	282.2	297.8	256.4	261.1	552.9	1193.9	263.9	260.8	231.9	252.7	70.3	68.6	70.3	68.0	230.20	30.28	6973.48
2006/11/17	06:38:00	1214.3	920.6	282.1	297.4	257.2	261.6	550.8	1154.8	264.7	260.9	231.8	252.7	69.7	68.0	70.4	68.1	230.20	30.30	6975.06
2006/11/17	06:39:00	1214.5	921.1	282.1	297.4	257.7	261.3	552.4	1017.8	265.0	261.1	231.8	252.7	69.9	69.0	70.6	68.8	230.20	30.29	6975.06
2006/11/17	06:40:00	1213.8	921.3	282.3	297.3	257.4	261.4	552.2	1186.4	264.3	261.2	231.9	252.7	70.0	67.7	70.8	68.8	230.30	30.30	6978.09
2006/11/17	06:41:00	1214.5	923.2	282.4	296.9	256.9	260.9	553.1	1083.7	264.4	260.9	231.9	252.7	69.8	67.8	70.2	68.0	230.20	30.29	6975.79
2006/11/17	06:42:00	1214.4	922.4	282.4	297.5	256.9	260.5	551.7	1181.1	264.4	261.3	231.9	252.7	69.3	67.6	70.2	68.3	230.20	30.30	6975.06
2006/11/17	06:43:00	1214.4	921.8	282.1	296.6	256.9	261.6	552.7	1190.3	264.4	261.1	232.0	252.7	69.3	67.6	70.0	68.4	230.20	30.30	6975.06
2006/11/17	06:44:00	1214.6	922.4	282.0	297.2	256.2	261.1	552.2	1056.3	264.2	261.2	232.0	252.7	69.9	68.2	69.7	68.2	230.20	30.29	6975.06
2006/11/17	06:45:00	1213.5	921.9	282.0	298.5	257.2	261.4	552.7	1101.8	264.6	260.9	231.7	252.7	69.6	68.8	70.1	68.2	230.20	30.29	6975.06
2006/11/17	06:46:00	1213.2	919.1	282.0	297.5	256.4	260.8	552.0	1101.8	264.2	261.4	231.7	252.6	70.6	68.1	70.6	69.3	230.20	30.29	6975.06
2006/11/17	06:47:00	1214.4	921.7	282.2	297.7	256.5	260.7	552.7	1085.4	263.5	260.8	231.9	252.6	69.7	67.9	70.3	67.7	230.20	30.29	6975.06
2006/11/17	06:48:00	1213.4	918.2	282.3	297.2	256.5	260.2	553.2	1099.5	263.5	260.7	231.9	252.6	69.5	67.8	70.3	67.5	230.10	30.27	6965.13
2006/11/17	06:49:00	1214.1	921.0	282.0	296.9	257.2	260.8	552.7	1085.1	264.0	260.9	231.8	252.7	69.7	68.8	70.1	67.8	230.20	30.29	6975.06
2006/11/17	06:50:00	1214.1	922.4	282.2	298.0	256.7	260.2	553.4	1102.5	263.7	260.9	231.8	252.6	69.9	67.8	70.2	68.2	229.50	30.23	6937.79
2006/11/17	06:51:00	1213.6	920.4	282.3	297.5	256.9	260.6	552.9	1133.5	263.9	260.5	231.7	252.7	69.9	67.3	70.1	67.8	230.20	30.30	6975.06
2006/11/17	06:52:00	1214.5	920.8	282.1	296.6	256.9	260.8	552.4	1051.1	263.9	260.7	231.8	252.7	69.6	68.2	69.9	68.3	230.20	30.30	6977.36
2006/11/17	06:53:00	1215.5	919.7	282.1	296.7	256.9	260.7	552.8	1206.1	263.9	260.7	232.0	252.6	69.9	68.3	70.1	67.8	230.20	30.30	6975.06
2006/11/17	06:54:00	1215.6	915.8	282.2	296.6	256.9	260.7	552.3	1237.1	264.2	260.6	231.8	252.6	69.6	67.3	69.9	67.9	230.20	30.29	6975.79
2006/11/17	06:55:00	1214.4	921.1	282.3	296.9	256.7	261.3	550.2	1027.6	264.4	260.7	232.0	252.7	69.9	68.1	70.3	68.3	230.30	30.29	6975.79
2006/11/17	06:56:00	1214.5	921.0	282.3	297.3	257.0	260.9	553.2	1082.3	264.2	260.6	231.8	252.6	69.7	68.1	70.3	68.2	230.20	30.28	6970.46
2006/11/17	06:57:00	1214.4	919.0	282.4	297.0	256.4	260.9	552.3	1114.5	263.8	260.5	231.9	252.8	69.3	67.3	69.7	67.9	230.20	30.28	6970.46
2006/11/17	06:58:00	1214.6	920.8	282.3	298.4	257.4	260.5	554.0	1080.1	263.5	260.9	232.0	252.7	69.5	67.6	70.0	67.5	230.20	30.29	6975.06
2006/11/17	06:59:00	1215.1	919.3	282.5	297.3	257.7	261.3	553.7	1229.9	264.4	260.8	231.8	252.7	69.8	67.8	70.1	68.4	230.20	30.29	6975.06
2006/11/17	07:00:00	1214.4	922.1	282.4	297.3	257.5	261.3	551.5	1179.1	264.2	260.7	231.8	252.7	69.6	67.3	70.1	68.4	230.20	30.30	6975.06
2006/11/17	07:01:00	1214.2	921.6	282.3	297.1	256.2	261.1	554.4	1090.5	264.0	260.6	231.9	252.7	69.5	67.3	69.8	67.7	228.90	30.16	6903.62
2006/11/17	07:02:00	1214.3	920.4	282.3	297.2	256.7	261.3	552.7	1121.1	263.9	260.5	231.7	252.6	69.7	67.6	69.8	68.0	229.30	30.20	6924.86
2006/11/17	07:03:00	1213.8	922.6	282.2	296.8	257.4	260.9	552.4	1081.3	263.9	260.7	231.9	252.7	69.9	67.5	70.1	67.6	230.20	30.28	6973.48
2006/11/17	07:04:00	1212.6	923.2	282.4	296.9	257.2	260.9	552.1	997.7	263.7	260.7	231.7	252.7	69.6	67.7	69.8	67.3	230.20	30.29	6975.79
2006/11/17	07:05:00	1212.9	923.1	282.3	297.2	257.2	261.4	552.4	996.8	264.4	260.8	231.8	252.6	69.9	68.8	70.8	68.3	230.20	30.29	6975.06
2006/11/17	07:06:00	1212.6	922.1	282.4	297.1	257.4	261.6	552.8	932.7	263.5	260.7	231.7	252.7	69.5	68.1	70.6	68.4	229.20	30.16	6912.67
2006/11/17	07:07:00	1212.9	921.6	282.4	296.7	257.8	261.3	552.7	991.4	264.0	260.8	231.7	252.7	69.3	68.3	70.2	68.4	230.00	30.12	6927.60
2006/11/17	07:08:00	1213.4	918.9	282.3	297.4	257.7	261.3	552.2	1174.9	264.2	260.6	231.9	252.6	69.3	67.7	70.0	67.8	230.20	30.30	6975.06
2006/11/17	07:09:00	1214.1	921.3	282.4	297.3	258.0	260.8	553.2	930.1	264.2	260.8	231.9	252.6	69.1	68.3	69.9	67.9	230.20	30.29	6975.06

Heat Rise Test
1st Run

Date	Time	TC1	TC2	TC3	TC4	TC5	TC6	TC7	TC8	TC9	TC10	TC11	TC12	TC13	TC14	TC15	TC16	VDC	Amps	Watts
2006/11/17	07:10:00	1212.9	921.8	282.2	298.1	257.2	261.3	552.6	972.5	263.8	260.8	231.6	252.6	69.8	67.3	69.8	68.6	230.20	30.26	6968.88
2006/11/17	07:11:00	1212.9	922.4	282.1	297.5	256.9	261.1	551.8	1024.5	263.7	260.4	231.7	252.6	69.5	67.1	69.7	67.7	230.20	30.29	6975.06
2006/11/17	07:12:00	1212.9	919.9	282.2	297.4	257.2	261.2	551.8	974.6	263.8	260.3	231.7	252.6	69.3	68.1	69.9	67.5	230.10	30.24	6967.30
2006/11/17	07:13:00	1214.0	920.6	282.3	297.5	257.0	260.9	553.5	986.6	263.7	260.8	231.8	252.6	69.6	68.1	70.1	68.2	230.20	30.28	6970.46
2006/11/17	07:14:00	1213.2	923.5	282.2	296.9	257.4	261.2	553.1	1085.0	263.5	260.6	231.9	252.7	69.5	67.7	69.9	67.7	230.20	30.28	6972.76
2006/11/17	07:15:00	1213.6	922.6	282.2	297.2	257.2	261.3	553.7	1126.0	263.4	260.7	232.1	252.7	69.5	67.9	69.7	67.5	230.20	30.29	6972.76
2006/11/17	07:16:00	1212.9	922.1	282.4	296.9	256.9	261.3	552.9	1057.5	264.3	261.2	231.9	252.7	69.3	67.8	69.8	67.9	230.20	30.25	6966.58
2006/11/17	07:17:00	1213.1	921.8	282.5	298.5	257.2	261.4	552.0	1136.9	264.2	261.2	231.9	252.7	69.7	68.3	70.2	67.5	229.10	30.21	6921.11
2006/11/17	07:18:00	1213.6	918.7	282.5	298.2	257.4	261.1	552.2	1155.7	264.4	260.9	231.8	252.7	69.8	68.1	70.0	67.3	229.10	30.19	6916.53
2006/11/17	07:19:00	1213.6	918.6	282.6	297.1	257.4	261.3	553.4	1122.9	264.2	260.9	231.9	252.7	69.7	68.2	70.0	67.8	230.10	30.29	6969.73
2006/11/17	07:20:00	1212.9	920.2	282.5	298.0	257.2	261.2	554.2	1130.2	264.9	261.2	231.8	252.7	69.9	68.8	70.4	68.6	230.20	30.29	6975.06
2006/11/17	07:21:00	1213.1	919.4	282.4	297.0	257.2	261.4	552.9	1133.2	264.3	261.1	231.7	252.7	68.8	68.6	69.5	68.2	230.20	30.29	6975.06
2006/11/17	07:22:00	1212.8	921.6	282.3	297.6	257.7	261.4	553.2	1230.8	263.9	260.9	231.9	252.6	69.3	67.9	69.1	67.9	230.10	30.24	6964.27
2006/11/17	07:23:00	1212.6	920.6	282.4	297.4	257.4	261.3	552.1	1224.2	264.5	260.9	231.8	252.7	69.1	68.0	69.1	68.1	230.00	30.27	6965.13
2006/11/17	07:24:00	1214.4	920.0	282.4	297.8	257.2	261.6	553.2	1199.8	263.7	260.9	231.9	252.7	69.3	67.8	70.0	67.9	230.10	30.29	6969.73
2006/11/17	07:25:00	1214.4	920.1	282.4	297.4	256.9	261.4	554.2	1116.1	264.2	260.9	231.9	252.7	69.6	68.2	69.9	68.4	229.40	30.17	6921.00
2006/11/17	07:26:00	1214.6	920.1	282.4	296.1	257.4	261.2	552.4	1127.9	263.9	260.9	231.8	252.6	69.3	67.3	69.6	68.0	230.10	30.28	6967.43
2006/11/17	07:27:00	1215.2	920.2	282.5	297.7	257.9	261.2	550.7	1102.1	264.0	260.7	231.9	252.6	69.3	67.5	70.2	67.8	230.10	30.29	6969.73
2006/11/17	07:28:00	1213.8	921.0	282.5	296.7	257.8	261.4	551.6	1126.2	264.4	260.9	231.8	252.7	69.3	68.3	70.4	68.4	230.20	30.29	6975.06
2006/11/17	07:29:00	1213.4	920.8	282.6	298.2	258.2	261.1	553.2	1118.4	264.4	260.9	232.0	252.8	69.6	68.8	70.2	68.1	230.00	30.26	6959.80
2006/11/17	07:30:00	1214.0	921.8	282.5	298.4	257.7	260.9	552.9	1001.2	263.9	260.7	232.0	252.7	69.3	66.8	69.7	67.5	230.20	30.29	6972.76
2006/11/17	07:31:00	1213.5	921.3	282.4	297.1	257.0	260.9	551.5	1143.6	264.2	260.6	231.7	252.6	68.6	66.2	69.3	67.2	229.60	30.25	6945.40
2006/11/17	07:32:00	1212.9	919.3	282.2	297.4	256.7	260.8	552.9	1044.3	263.9	260.2	231.8	252.7	68.2	65.7	69.0	66.0	230.20	30.29	6972.76
2006/11/17	07:33:00	1214.1	920.4	281.4	297.3	256.1	260.8	551.3	1151.9	263.4	260.4	231.8	252.7	68.6	67.0	69.1	66.0	230.00	30.28	6964.40
2006/11/17	07:34:00	1213.5	919.9	282.1	297.3	256.7	261.1	551.9	1113.8	263.4	260.4	231.6	252.7	68.8	66.8	68.8	66.4	230.20	30.29	6972.76
2006/11/17	07:35:00	1214.6	917.9	282.0	296.9	257.2	261.6	552.7	1051.4	264.4	260.9	231.7	252.7	68.8	68.4	68.6	67.7	230.10	30.29	6969.73
2006/11/17	07:36:00	1213.3	918.7	282.3	297.6	257.5	261.7	552.4	1067.3	264.8	261.1	231.7	252.7	68.8	68.4	69.1	68.4	230.20	30.29	6972.76
2006/11/17	07:37:00	1213.5	917.7	282.5	297.9	256.2	261.4	553.5	1074.0	264.0	260.7	231.8	252.9	69.0	67.3	69.3	67.2	230.20	30.29	6972.76
2006/11/17	07:38:00	1213.6	917.9	282.3	297.8	256.7	261.6	552.4	1144.6	264.7	261.1	231.8	252.8	68.8	67.7	69.3	67.6	229.50	30.22	6935.49
2006/11/17	07:39:00	1213.1	918.7	282.4	297.9	256.1	261.4	552.3	956.6	264.3	260.5	231.9	252.8	68.4	68.2	68.8	67.7	230.20	30.29	6975.06
2006/11/17	07:40:00	1212.5	917.5	282.3	296.9	257.2	261.3	551.3	956.6	263.8	260.5	231.7	252.8	68.8	67.0	68.6	67.6	230.20	30.29	6972.76
2006/11/17	07:41:00	1214.1	918.5	282.3	297.0	256.4	260.9	551.7	1103.6	264.2	260.6	231.9	252.7	68.6	67.3	68.4	66.8	230.00	30.22	6950.60
2006/11/17	07:42:00	1214.4	919.6	282.2	298.0	256.9	261.3	552.0	1075.2	264.6	260.9	231.8	252.7	68.0	68.3	68.3	67.3	229.60	30.19	6933.92
2006/11/17	07:43:00	1212.6	920.9	282.2	298.3	256.7	260.9	553.1	1099.7	263.8	260.8	231.9	252.7	68.3	67.3	68.3	67.5	229.40	30.19	6925.59
2006/11/17	07:44:00	1213.6	920.4	282.2	297.9	257.2	260.9	552.6	1152.0	264.2	260.6	231.8	252.6	68.3	67.0	69.0	66.6	230.20	30.29	6972.76
2006/11/17	07:45:00	1214.1	920.4	282.1	297.5	257.4	261.2	550.8	983.0	264.9	260.9	231.8	252.6	67.9	68.3	69.5	68.1	230.20	30.29	6972.76
2006/11/17	07:46:00	1213.6	922.4	282.4	297.4	256.7	261.3	552.8	1144.0	264.8	260.7	231.9	252.6	69.1	68.4	69.1	68.0	229.80	30.23	6949.88
2006/11/17	07:47:00	1213.5	919.7	282.4	296.2	257.2	261.3	553.2	1129.3	263.8	260.9	231.9	252.7	69.0	68.0	68.6	67.8	230.20	30.28	6970.46
2006/11/17	07:48:00	1214.8	916.9	282.3	296.9	257.2	261.2	553.2	1135.7	263.8	260.6	231.7	252.6	68.2	66.6	68.6	67.8	230.00	30.26	6959.80
2006/11/17	07:49:00	1213.5	919.4	282.2	297.6	256.7	260.9	552.8	1099.5	264.0	260.9	232.0	252.7	68.3	65.7	68.3	67.3	230.10	30.29	6972.03
2006/11/17	07:50:00	1212.8	918.7	282.2	297.3	256.4	261.1	553.2	1133.2	264.2	260.9	231.8	252.5	68.8	66.8	69.1	67.2	230.10	30.29	6972.03
2006/11/17	07:51:00	1213.6	918.5	282.2	297.7	256.7	260.5	552.1	1144.3	264.4	261.2	231.8	252.6	68.6	65.9	69.1	67.6	230.20	30.28	6972.76
2006/11/17	07:52:00	1212.6	919.6	282.3	297.4	257.2	261.2	552.6	1079.2	264.2	260.8	231.8	252.6	68.4	65.6	69.0	67.3	229.80	30.22	6958.34
2006/11/17	07:53:00	1212.9	920.5	282.2	297.5	256.9	260.7	553.7	1112.8	263.4	260.7	232.0	252.6	68.4	66.1	68.8	65.9	229.90	30.26	6956.77
2006/11/17	07:54:00	1213.4	916.7	282.2	297.5	256.4	260.6	553.1	1213.2	263.5	260.7	231.5	252.5	68.6	66.6	68.3	65.7	229.90	30.26	6956.77
2006/11/17	07:55:00	1214.5	916.4	282.5	297.4	257.8	261.3	552.7	1154.7	264.6	260.9	231.7	252.4	68.6	67.9	69.1	66.8	230.10	30.28	6967.43
2006/11/17	07:56:00	1214.5	918.5	282.7	298.3	258.4	261.4	553.7	1195.2	264.3	260.4	232.0	252.5	68.6	67.9	69.1	66.4	230.10	30.29	6969.73
2006/11/17	07:57:00	1213.7	917.2	282.5	297.7	258.2	261.3	552.0	994.3	264.7	261.1	231.9	252.6	68.4	67.8	69.6	67.0	230.20	30.28	6972.76
2006/11/17	07:58:00	1213.1	918.0	282.4	298.3	257.5	261.4	552.2	1119.8	264.3	260.8	231.8	252.6	68.4	66.8	68.6	67.0	230.10	30.29	6969.73
2006/11/17	07:59:00	1213.4	918.0	282.4	297.7	256.9	261.4	553.2	1106.1	264.2	260.9	231.8	252.5	68.4	66.0	68.6	66.8	230.00	30.27	6962.10
2006/11/17	08:00:00	1213.3	922.1	282.3	297.8	256.7	260.1	552.4	1146.8	263.7	260.9	231.9	252.6	68.2	66.3	68.8	66.0	230.10	30.29	6969.73
2006/11/17	08:01:00	1212.9	921.1	282.3	297.2	256.7	260.8	552.7	1130.2	264.0	260.6	231.9	252.6	68.1	65.1	68.6	66.6	229.90	30.26	6956.77
2006/11/17	08:02:00	1212.3	921.8	282.5	297.8	257.0	260.9	551.4	1147.4	263.4	260.9	231.8	252.5	68.2	65.1	68.8	65.5	229.80	30.25	6951.45
2006/11/17	08:03:00	1211.7	918.3	282.5	297.1	256.4	260.8	552.0	983.5	263.8	260.5	231.7	252.6	67.7	65.7	68.2	65.5	230.10	30.27	6965.13
2006/11/17	08:04:00	1213.2	919.7	282.5	297.1	257.2	261.4	552.1	1205.5	264.2	260.9	231.7	252.6	67.1	67.3	68.6	67.6	229.80	30.20	6939.96
2006/11/17	08:05:00	1212.2	919.4	282.5	297.7	257.2	261.6	551.7	1110.0	264.0	260.9	232.0	252.8	67.7	67.3	68.6	67.1	230.20	30.28	6972.76

Heat Rise Test
1st Run

Date	Time	TC1	TC2	TC3	TC4	TC5	TC6	TC7	TC8	TC9	TC10	TC11	TC12	TC13	TC14	TC15	TC16	VDC	Amps	Watts
2006/11/17	08:06:00	1212.4	919.9	282.5	297.5	258.3	260.9	551.9	1089.4	263.8	260.9	231.8	252.6	68.0	67.3	68.8	65.9	230.20	30.29	6972.76
2006/11/17	08:07:00	1213.8	917.9	282.6	297.5	258.0	261.4	552.6	1155.4	264.6	261.2	231.9	252.5	68.0	66.8	68.4	65.8	229.90	30.26	6959.07
2006/11/17	08:08:00	1214.1	920.7	282.6	297.7	257.0	261.3	550.8	1120.9	264.8	261.1	231.8	252.6	68.1	66.6	68.8	67.2	230.20	30.27	6968.15
2006/11/17	08:09:00	1213.9	920.4	282.6	297.6	256.7	260.9	552.9	1116.9	263.8	260.9	232.2	252.8	68.0	65.9	68.3	66.3	229.90	30.25	6954.47
2006/11/17	08:10:00	1213.7	918.1	282.8	299.1	257.9	261.2	555.4	1292.6	264.8	261.3	232.5	253.0	69.6	68.4	69.3	67.1	230.30	30.30	6978.09
2006/11/17	08:11:00	1213.8	918.1	282.7	297.0	256.7	261.3	552.4	1184.9	264.0	260.9	232.0	252.9	69.1	67.7	69.1	66.8	230.10	30.27	6965.13
2006/11/17	08:12:00	1213.3	922.6	282.6	297.6	256.5	261.2	551.5	1071.3	264.0	261.1	232.0	252.9	67.8	67.9	68.4	66.8	230.10	30.27	6968.15
2006/11/17	08:13:00	1213.6	919.0	282.4	297.4	257.2	261.3	550.9	1046.3	264.5	261.2	232.1	252.9	67.9	66.3	67.9	67.8	230.00	30.26	6959.80
2006/11/17	08:14:00	1212.6	920.8	282.6	297.7	256.2	261.4	552.8	1049.4	264.5	261.2	232.2	253.0	68.0	66.6	69.3	67.3	230.20	30.29	6972.76
2006/11/17	08:15:00	1212.6	919.3	282.5	297.0	257.2	261.3	551.5	1020.5	264.8	261.4	232.1	253.0	68.0	67.0	68.6	67.7	229.90	30.27	6959.07
2006/11/17	08:16:00	1212.8	919.9	282.6	298.1	256.9	261.3	553.1	1042.9	264.0	261.4	232.3	253.1	68.6	66.6	68.8	67.3	230.20	30.29	6972.76
2006/11/17	08:17:00	1211.9	919.7	282.8	298.1	255.9	260.9	552.4	1046.2	265.4	261.4	232.1	253.1	68.4	68.0	69.9	67.5	230.20	30.28	6972.76
2006/11/17	08:18:00	1213.7	918.4	282.8	297.1	256.2	261.6	551.4	1074.4	264.7	261.7	232.2	253.1	68.6	66.6	68.6	67.7	230.20	30.27	6968.15
2006/11/17	08:19:00	1212.6	918.8	282.8	297.8	256.7	261.6	552.6	1061.9	264.4	261.4	232.4	253.1	69.0	65.9	69.0	67.2	229.00	30.13	6899.77
2006/11/17	08:20:00	1213.1	920.4	282.6	298.1	256.7	261.7	552.4	1107.8	265.2	261.7	232.3	253.1	68.1	66.6	69.1	67.6	230.00	30.27	6962.10
2006/11/17	08:21:00	1211.8	919.3	282.6	298.5	257.7	261.3	552.9	1039.7	264.5	261.4	232.2	253.1	67.7	67.0	68.8	67.5	230.20	30.29	6972.76
2006/11/17	08:22:00	1213.3	921.3	282.7	297.7	257.2	260.6	552.9	1073.4	265.3	261.8	232.2	253.1	66.8	68.2	68.6	67.7	229.70	30.25	6948.43
2006/11/17	08:23:00	1213.4	920.5	282.7	298.3	257.2	261.6	553.4	1058.1	264.8	262.2	232.1	253.1	67.5	68.3	69.1	68.1	230.10	30.27	6965.13
2006/11/17	08:24:00	1213.6	922.1	282.7	298.1	257.4	261.2	553.5	1022.5	264.6	262.2	232.0	253.1	66.6	67.9	68.3	68.3	230.10	30.28	6967.43
2006/11/17	08:25:00	1213.1	922.1	282.5	298.1	257.0	261.3	552.3	995.5	264.5	262.1	232.1	253.0	68.0	67.8	69.1	67.9	230.20	30.27	6971.18
2006/11/17	08:26:00	1212.3	919.9	282.5	298.3	256.1	261.4	551.9	1003.3	264.7	261.7	232.1	252.9	67.6	67.0	68.3	67.7	228.90	30.17	6905.91
2006/11/17	08:27:00	1213.6	919.6	282.3	297.1	256.9	260.9	552.4	978.6	263.9	261.6	232.1	252.9	67.6	66.4	67.7	66.1	229.80	30.22	6944.56
2006/11/17	08:28:00	1212.5	922.9	282.5	297.4	256.5	261.6	552.3	904.4	264.8	261.4	232.0	252.9	67.3	66.8	68.1	66.2	230.20	30.27	6972.76
2006/11/17	08:29:00	1212.9	919.3	282.5	296.8	256.7	261.2	553.2	967.8	264.3	261.4	231.7	252.9	66.8	67.2	68.3	67.1	230.10	30.29	6969.73
2006/11/17	08:30:00	1214.2	920.1	282.4	298.0	256.2	261.1	552.1	940.0	263.7	261.4	231.7	252.9	67.5	67.9	68.3	67.3	230.10	30.28	6967.43
2006/11/17	08:31:00	1214.1	919.6	282.6	297.0	256.2	261.1	552.4	881.1	265.3	262.2	232.1	252.9	68.1	67.8	67.8	68.1	230.20	30.27	6968.15
2006/11/17	08:32:00	1213.5	919.1	282.4	297.1	256.4	260.9	553.7	958.4	264.8	261.6	232.1	252.9	68.2	66.6	68.8	67.0	230.10	30.22	6956.64
2006/11/17	08:33:00	1213.4	920.2	282.6	296.6	255.9	261.1	553.1	804.1	263.9	261.6	232.2	252.9	68.8	66.3	68.6	67.2	230.10	30.26	6965.85
2006/11/17	08:34:00	1214.3	920.4	282.7	297.4	257.0	261.3	552.8	849.4	264.5	261.4	232.4	253.0	68.6	67.2	69.8	67.8	230.10	30.26	6968.88
2006/11/17	08:35:00	1213.5	919.7	282.7	297.2	256.5	261.1	553.5	767.4	264.4	261.6	232.3	253.1	68.8	67.1	69.1	67.3	230.10	30.27	6967.43
2006/11/17	08:36:00	1213.6	919.4	282.9	296.9	257.5	261.3	554.2	815.3	265.2	261.4	232.5	253.1	68.6	67.8	69.7	68.1	230.20	30.26	6970.46
2006/11/17	08:37:00	1213.0	922.9	282.7	298.3	257.2	261.6	553.5	769.2	264.2	261.4	232.6	253.2	69.1	67.2	69.8	67.9	229.50	30.21	6933.20
2006/11/17	08:38:00	1212.1	921.0	282.8	298.6	257.4	261.7	553.7	814.0	264.8	261.4	232.5	253.3	68.8	67.3	69.8	67.2	230.10	30.28	6967.43
2006/11/17	08:39:00	1212.5	921.8	282.9	298.2	257.5	261.6	552.4	824.3	265.1	261.8	232.7	253.3	68.8	67.2	69.6	67.3	230.20	30.29	6972.76
2006/11/17	08:40:00	1212.9	919.0	282.9	297.9	257.0	261.7	552.0	985.8	264.7	261.4	232.8	253.3	68.6	67.0	69.1	67.3	230.10	30.26	6968.88
2006/11/17	08:41:00	1214.1	919.6	282.8	297.5	257.0	261.4	553.2	975.1	264.9	261.7	232.6	253.3	68.8	67.3	68.8	67.3	229.20	30.21	6924.13
2006/11/17	08:42:00	1213.6	919.6	282.9	297.0	257.4	261.9	552.8	971.9	264.8	261.9	232.6	253.3	68.6	67.2	69.5	67.1	229.90	30.28	6963.67
2006/11/17	08:43:00	1214.1	919.7	283.0	297.6	258.0	261.7	553.9	942.3	264.9	261.4	232.6	253.3	68.8	67.6	69.6	67.7	230.00	30.17	6948.15
2006/11/17	08:44:00	1212.6	921.1	282.9	297.5	258.4	261.9	552.3	895.6	264.8	261.7	232.6	253.3	69.0	68.1	69.3	67.3	229.40	30.20	6927.88
2006/11/17	08:45:00	1212.4	918.7	282.9	297.1	257.2	261.7	553.2	894.0	265.0	261.9	232.6	253.3	68.8	67.3	68.8	67.3	229.90	30.26	6956.77
2006/11/17	08:46:00	1211.9	923.3	282.8	297.9	257.8	261.6	553.5	858.2	265.1	262.2	232.6	253.3	68.6	67.3	69.3	68.0	230.10	30.26	6962.83
2006/11/17	08:47:00	1211.9	918.7	282.9	298.1	257.4	261.8	553.9	912.7	265.1	261.7	232.6	253.3	69.0	67.5	69.6	67.7	230.00	30.27	6967.43
2006/11/17	08:48:00	1212.9	919.9	283.0	298.1	257.4	261.9	553.4	814.3	264.8	261.8	232.8	253.2	68.8	67.3	68.8	67.3	230.10	30.26	6965.85
2006/11/17	08:49:00	1212.8	922.1	283.0	298.2	257.4	261.7	551.5	940.5	265.2	261.6	232.7	253.3	68.2	67.3	69.5	67.3	229.80	30.21	6948.30
2006/11/17	08:50:00	1212.2	921.5	283.1	297.6	257.7	261.9	552.4	959.0	265.0	261.9	232.7	253.3	68.6	67.8	69.1	68.0	230.10	30.25	6969.60
2006/11/17	08:51:00	1212.6	919.1	283.1	298.4	257.7	261.7	553.1	963.3	264.7	261.8	232.3	253.3	68.8	67.3	69.3	68.3	230.10	30.28	6970.46
2006/11/17	08:52:00	1211.7	919.9	283.1	298.0	257.5	261.9	552.1	950.1	264.4	261.6	232.8	253.3	68.8	67.3	69.7	67.3	230.20	30.28	6970.46
2006/11/17	08:53:00	1211.9	921.9	283.1	298.0	257.4	262.1	552.2	907.9	265.1	261.8	232.6	253.3	68.8	67.3	69.1	67.5	230.10	30.23	6955.92
2006/11/17	08:54:00	1212.0	920.6	283.0	298.0	256.5	261.7	552.9	889.7	264.2	261.4	232.6	253.2	68.0	67.3	69.0	67.8	229.80	30.24	6949.15
2006/11/17	08:55:00	1213.6	919.7	283.0	297.7	257.0	262.2	552.0	818.2	264.9	261.6	232.7	253.2	68.2	67.1	69.3	67.3	230.00	30.28	6966.70
2006/11/17	08:56:00	1214.1	919.0	282.9	296.5	257.4	261.9	552.4	928.1	264.4	261.4	232.5	253.1	68.1	67.3	70.1	67.3	229.90	30.22	6955.92
2006/11/17	08:57:00	1214.3	919.9	283.0	296.9	257.2	261.9	551.0	828.4	264.7	261.6	232.6	253.2	69.0	67.5	69.7	67.2	229.70	30.25	6948.43
2006/11/17	08:58:00	1214.0	917.6	282.7	296.9	256.9	261.7	553.2	766.9	264.6	261.3	232.5	253.2	68.1	67.5	68.3	66.6	229.90	30.27	6959.07
2006/11/17	08:59:00	1213.6	921.8	282.9	297.7	257.2	261.8	552.1	694.7	264.7	261.3	232.6	253.2	67.9	67.1	68.8	66.6	230.20	30.26	6968.88
2006/11/17	09:00:00	1214.0	919.1	283.0	297.6	257.4	262.1	551.3	662.9	264.9	261.4	232.6	253.2	68.3	67.1	69.1	67.1	229.80	30.24	6949.15
2006/11/17	09:01:00	1213.3	921.4	283.0	298.0	257.4	261.9	551.3	757.9	264.7	261.3	232.6	253.2	68.8	67.6	69.5	67.6	229.60	30.22	6938.51

Heat Rise Test
1st Run

Date	Time	TC1	TC2	TC3	TC4	TC5	TC6	TC7	TC8	TC9	TC10	TC11	TC12	TC13	TC14	TC15	TC16	VDC	Amps	Watts
2006/11/17	09:02:00	1213.8	918.2	283.0	297.7	257.7	261.8	551.2	793.0	264.8	261.4	232.6	253.3	68.6	67.5	68.6	67.0	230.00	30.27	6962.10
2006/11/17	09:03:00	1213.1	918.2	282.8	297.6	257.0	261.9	552.3	844.8	264.4	261.6	232.5	253.2	68.8	67.2	69.9	67.3	230.10	30.29	6969.73
2006/11/17	09:04:00	1212.8	920.4	283.1	297.9	257.5	262.2	551.0	800.4	264.4	261.4	232.5	253.2	68.1	66.6	69.1	66.8	229.80	30.25	6951.45
2006/11/17	09:05:00	1213.5	921.5	283.0	297.1	257.4	261.9	552.6	821.2	264.9	261.4	232.3	253.2	68.2	66.8	68.3	66.6	230.10	30.28	6969.73
2006/11/17	09:06:00	1213.6	919.3	282.9	297.5	256.5	261.8	551.5	859.7	264.6	261.3	232.3	253.2	67.3	66.1	68.6	66.6	230.20	30.29	6972.76
2006/11/17	09:07:00	1213.3	920.1	283.0	297.5	257.4	261.7	552.2	807.0	264.6	261.7	232.5	253.3	67.5	66.8	68.2	66.3	230.20	30.29	6972.76
2006/11/17	09:08:00	1213.5	921.1	282.9	296.9	257.4	262.2	551.6	844.5	264.7	261.7	232.5	253.2	68.0	66.4	68.3	66.4	230.00	30.27	6962.10
2006/11/17	09:09:00	1213.7	921.6	283.1	296.9	257.7	262.4	552.3	848.5	265.2	261.8	232.6	253.2	68.2	67.3	69.5	67.5	230.00	30.23	6955.92
2006/11/17	09:10:00	1213.3	921.7	282.7	298.0	257.0	262.2	552.1	901.1	264.7	261.8	232.6	253.4	68.8	67.1	69.3	67.3	229.70	30.21	6939.24
2006/11/17	09:11:00	1212.9	920.6	283.1	297.6	256.7	262.2	550.5	848.6	264.8	261.7	232.6	253.3	67.8	66.8	68.2	67.2	230.00	30.27	6966.70
2006/11/17	09:12:00	1212.4	921.0	283.0	297.4	257.2	262.2	551.4	752.8	265.0	262.1	232.7	253.4	68.0	66.8	68.2	67.0	229.40	30.20	6930.17
2006/11/17	09:13:00	1212.5	917.9	283.3	297.9	256.7	261.8	553.4	782.2	265.1	261.7	232.6	253.4	68.6	67.3	68.8	66.6	230.10	30.27	6965.13
2006/11/17	09:14:00	1213.4	919.3	283.1	296.8	256.9	262.2	552.7	1066.7	265.2	261.9	232.6	253.4	68.3	68.0	68.6	67.0	230.00	30.27	6962.10
2006/11/17	09:15:00	1213.3	919.9	283.3	297.4	257.4	262.2	551.6	809.5	264.6	261.4	232.4	253.4	68.3	67.3	69.0	67.1	230.20	30.29	6972.76
2006/11/17	09:16:00	1211.9	919.9	283.2	298.5	256.7	262.2	551.7	999.2	265.3	261.9	232.6	253.4	68.2	67.7	69.1	67.5	229.80	30.22	6946.85
2006/11/17	09:17:00	1212.9	920.4	283.2	297.4	256.2	262.1	552.0	902.7	265.2	261.9	232.5	253.4	67.7	68.1	69.8	68.1	230.20	30.27	6968.15
2006/11/17	09:18:00	1213.9	919.6	283.3	296.7	257.8	262.2	552.6	986.1	265.7	261.9	232.6	253.5	68.3	67.6	69.0	67.3	230.10	30.25	6963.55
2006/11/17	09:19:00	1212.6	920.8	283.4	297.9	256.4	262.2	552.6	928.6	265.3	262.2	232.6	253.5	67.0	67.6	69.8	66.8	230.20	30.29	6972.76
2006/11/17	09:20:00	1213.4	919.1	283.3	297.0	256.2	261.4	551.9	931.4	264.9	262.1	232.7	253.5	67.1	67.2	69.1	66.3	229.70	30.20	6942.98
2006/11/17	09:21:00	1213.2	921.9	283.5	297.7	256.9	261.8	551.3	913.1	265.4	262.1	232.7	253.6	68.4	67.3	69.3	67.1	230.20	30.28	6970.46
2006/11/17	09:22:00	1213.7	922.6	283.4	297.6	257.0	262.4	552.9	915.1	265.3	262.1	232.7	253.6	68.4	67.7	69.6	67.7	229.60	30.21	6936.22
2006/11/17	09:23:00	1213.1	921.1	283.4	297.5	257.7	262.2	552.9	924.9	265.7	262.7	232.8	253.6	68.4	67.3	69.3	67.9	230.00	30.26	6965.13
2006/11/17	09:24:00	1213.0	919.7	283.5	297.8	257.4	262.4	552.1	866.7	265.1	261.9	232.8	253.5	68.4	67.6	69.8	67.6	229.90	30.26	6956.77
2006/11/17	09:25:00	1212.6	920.5	283.5	298.0	256.4	262.4	551.2	917.9	265.2	261.9	232.6	253.5	68.4	67.7	68.8	67.9	230.10	30.28	6969.73
2006/11/17	09:26:00	1213.5	922.3	283.4	297.3	256.7	262.1	553.4	859.8	265.0	262.1	232.7	253.5	67.8	67.8	68.8	67.6	228.70	30.15	6895.31
2006/11/17	09:27:00	1212.8	921.1	283.4	296.6	257.4	261.9	552.6	949.3	265.5	262.1	232.7	253.4	68.3	67.5	69.3	67.3	229.70	30.23	6943.83
2006/11/17	09:28:00	1212.0	921.2	283.4	297.8	257.0	262.1	553.4	908.1	265.0	262.1	232.7	253.5	68.6	67.5	69.1	67.3	230.10	30.26	6962.83
2006/11/17	09:29:00	1213.0	921.1	283.5	297.0	256.9	262.2	552.9	896.9	265.0	262.2	232.6	253.5	67.7	67.6	69.0	67.0	229.30	30.14	6915.69
2006/11/17	09:30:00	1212.8	919.9	283.5	297.2	256.2	262.2	552.4	937.4	264.4	261.8	232.6	253.5	67.5	67.3	69.3	67.6	229.20	30.01	6878.29
2006/11/17	09:31:00	1213.9	918.5	283.4	297.2	257.4	261.9	553.4	893.1	265.8	262.2	232.6	253.5	68.6	67.1	68.3	67.7	229.50	30.23	6937.79
2006/11/17	09:32:00	1214.5	921.0	283.3	297.1	257.2	262.1	551.7	971.8	264.7	262.2	232.7	253.5	68.6	67.0	68.8	67.0	229.70	30.19	6934.64
2006/11/17	09:33:00	1213.1	920.8	283.4	297.7	257.4	262.2	552.1	944.9	265.3	262.4	232.5	253.5	68.6	67.3	69.3	67.5	229.80	30.20	6942.26
2006/11/17	09:34:00	1212.9	921.4	283.3	297.2	256.5	262.2	552.0	960.4	265.1	261.9	232.7	253.5	68.4	67.1	68.4	67.5	229.70	30.20	6939.96
2006/11/17	09:35:00	1213.3	920.6	283.2	297.1	256.9	262.2	552.0	847.4	265.3	261.9	232.5	253.5	68.3	67.9	68.3	67.1	229.70	30.25	6948.43
2006/11/17	09:36:00	1213.6	920.8	283.1	296.5	257.9	262.4	551.7	954.0	265.3	262.4	232.6	253.5	68.1	67.9	68.3	67.3	229.50	30.15	6925.45
2006/11/17	09:37:00	1213.3	921.0	283.4	297.2	257.7	262.2	552.4	888.6	265.3	262.4	232.8	253.6	67.6	67.3	68.8	67.1	229.70	30.24	6946.13
2006/11/17	09:38:00	1213.3	922.4	283.5	297.3	257.5	262.7	552.2	1008.6	265.7	262.9	232.8	253.6	67.6	67.2	68.4	67.3	229.70	30.21	6947.58
2006/11/17	09:39:00	1212.9	921.1	283.2	297.9	258.0	262.6	552.7	965.1	265.4	262.4	233.0	253.7	68.4	66.8	69.1	66.6	229.90	30.26	6956.77
2006/11/17	09:40:00	1212.4	921.8	283.6	296.7	257.8	262.7	551.5	879.7	265.6	262.9	232.9	253.7	67.9	67.3	69.9	67.1	229.90	30.21	6956.77
2006/11/17	09:41:00	1212.6	920.0	283.5	296.8	257.5	262.7	552.4	868.4	265.6	262.7	233.0	253.8	68.2	67.3	70.0	67.1	230.10	30.24	6964.27
2006/11/17	09:42:00	1212.6	921.1	283.7	297.5	257.0	262.4	552.1	890.1	265.4	262.6	232.9	253.7	68.6	67.3	69.5	67.5	229.80	30.21	6942.26
2006/11/17	09:43:00	1214.2	918.8	283.5	297.1	257.4	261.9	551.2	834.9	264.8	262.4	232.8	253.6	68.4	66.8	69.3	66.8	229.60	30.18	6929.33
2006/11/17	09:44:00	1212.9	916.9	283.3	297.4	256.4	262.2	551.0	986.3	265.2	262.1	232.6	253.5	67.8	66.8	68.1	65.9	229.60	30.22	6938.51
2006/11/17	09:45:00	1213.6	920.0	283.3	297.3	257.2	261.9	551.1	924.8	264.5	262.4	232.6	253.5	68.2	66.4	68.0	66.6	229.90	30.22	6947.58
2006/11/17	09:46:00	1213.2	918.8	283.3	297.6	257.4	262.2	551.1	889.9	264.6	261.8	232.7	253.5	68.0	67.0	68.8	66.3	229.70	30.24	6946.13
2006/11/17	09:47:00	1213.2	918.8	283.5	298.2	255.9	262.4	550.9	865.8	265.0	262.2	232.5	253.5	68.2	67.0	68.8	66.8	229.30	30.25	6954.67
2006/11/17	09:48:00	1213.4	921.3	283.4	297.0	256.4	261.9	550.9	865.8	265.4	262.2	232.5	253.4	68.3	66.8	68.6	67.2	229.10	30.17	6911.95
2006/11/17	09:49:00	1212.6	919.1	283.3	298.0	256.9	261.9	551.2	765.0	264.7	262.2	232.4	253.4	67.9	66.6	68.1	66.4	229.20	30.20	6921.84
2006/11/17	09:50:00	1213.1	920.5	283.3	297.9	257.0	261.9	551.1	832.8	265.5	262.4	232.5	253.3	67.8	67.3	67.9	66.4	229.30	30.21	6927.15
2006/11/17	09:51:00	1212.9	919.0	283.3	297.3	256.2	262.4	550.3	998.8	265.5	262.4	232.7	253.5	68.1	67.0	68.2	66.6	229.20	30.17	6914.96
2006/11/17	09:52:00	1213.4	920.5	283.4	295.9	256.7	262.4	552.2	924.8	265.3	262.4	232.6	253.5	68.0	66.8	67.2	66.6	229.50	30.26	6944.67
2006/11/17	09:53:00	1213.6	921.0	283.3	296.9	256.4	262.1	550.8	969.3	265.2	262.4	232.7	253.6	67.9	65.8	67.2	66.2	230.00	30.26	6959.80
2006/11/17	09:54:00	1213.7	918.6	283.6	297.5	257.7	261.8	550.7	1093.2	265.3	262.2	232.7	253.5	67.9	66.6	67.9	66.1	229.20	30.18	6917.26
2006/11/17	09:55:00	1213.8	918.9	283.2	297.3	256.5	262.1	551.8	886.5	265.6	262.4	232.6	253.5	66.8	66.6	67.8	66.4	229.40	30.17	6932.47
2006/11/17	09:56:00	1212.3	918.5	283.1	297.5	256.7	262.4	550.8	876.3	265.2	262.2	232.4	253.4	67.1	66.4	69.1	66.8	229.50	30.23	6937.79
2006/11/17	09:57:00	1212.5	918.5	283.4	297.2	257.2	262.2	551.2	923.9	265.4	262.2	232.6	253.4	67.5	67.0	68.2	66.6	230.10	30.23	6961.97

Heat Rise Test
1st Run

Date	Time	TC1	TC2	TC3	TC4	TC5	TC6	TC7	TC8	TC9	TC10	TC11	TC12	TC13	TC14	TC15	TC16	VDC	Amps	Watts
2006/11/17	09:58:00	1212.6	920.8	283.4	296.7	257.5	262.2	548.9	824.1	265.5	262.1	232.7	253.4	68.0	66.8	67.9	66.6	229.60	30.26	6947.70
2006/11/17	09:59:00	1213.6	918.6	283.5	296.9	256.7	261.6	552.0	923.3	265.2	262.2	232.7	253.4	67.3	66.3	67.9	66.6	230.00	30.18	6941.40
2006/11/17	10:00:00	1212.8	917.9	283.2	297.3	256.9	261.9	549.9	933.9	265.4	261.9	232.7	253.4	67.7	66.3	68.0	66.6	229.70	30.25	6948.43
2006/11/17	10:01:00	1213.2	916.9	283.3	297.8	256.2	261.9	550.3	933.9	264.7	261.6	232.6	253.4	65.9	66.6	67.7	65.8	230.20	30.28	6970.46
2006/11/17	10:02:00	1212.6	920.0	283.1	297.4	256.5	261.6	552.3	946.8	265.0	262.2	232.5	253.4	65.9	65.5	67.6	66.6	230.10	30.23	6961.97
2006/11/17	10:03:00	1212.9	920.6	283.4	297.6	257.0	261.9	551.1	1037.8	264.5	261.9	232.5	253.4	67.3	66.2	68.2	66.2	230.00	30.20	6961.10
2006/11/17	10:04:00	1212.6	918.7	283.4	297.0	257.2	261.8	549.1	912.6	265.0	261.7	232.6	253.4	67.8	66.1	68.0	65.6	229.90	30.24	6952.18
2006/11/17	10:05:00	1213.5	918.7	283.2	297.0	256.7	262.2	550.2	921.1	264.7	261.6	232.5	253.4	67.7	66.2	68.0	66.8	229.60	30.22	6938.51
2006/11/17	10:06:00	1212.9	919.4	283.4	297.5	256.2	261.9	551.6	835.7	265.2	261.9	232.7	253.4	67.3	65.3	68.0	66.0	229.30	30.20	6924.86
2006/11/17	10:07:00	1212.8	919.9	283.1	297.8	256.2	261.9	550.7	811.4	265.3	261.9	232.5	253.4	67.3	65.3	67.2	65.3	229.60	30.21	6936.22
2006/11/17	10:08:00	1212.6	920.2	283.1	297.4	256.4	261.9	551.3	934.5	265.1	262.1	232.6	253.4	66.8	65.3	67.0	65.5	229.80	30.22	6958.34
2006/11/17	10:09:00	1212.0	919.9	283.3	297.7	256.2	261.9	551.6	835.5	264.8	261.9	232.8	253.5	67.3	65.5	67.8	64.8	229.90	30.24	6954.47
2006/11/17	10:10:00	1211.9	922.4	283.3	297.5	257.4	261.7	550.7	786.2	264.5	261.8	232.8	253.5	67.2	65.4	67.9	65.4	229.40	30.20	6927.88
2006/11/17	10:11:00	1212.3	919.1	283.5	297.2	255.9	261.8	551.2	782.8	264.4	261.8	232.7	253.4	66.0	66.4	67.8	65.5	230.10	30.23	6961.97
2006/11/17	10:12:00	1212.0	919.1	283.3	297.9	255.9	261.9	550.3	862.5	265.1	261.9	232.7	253.4	66.2	65.9	67.3	65.7	229.60	30.21	6936.22
2006/11/17	10:13:00	1211.9	917.2	283.4	297.4	256.4	262.1	551.6	907.0	264.8	261.9	232.6	253.4	67.0	65.2	67.3	66.0	230.20	30.28	6970.46
2006/11/17	10:14:00	1212.2	917.6	283.5	297.3	255.9	261.9	551.3	970.1	264.6	262.4	232.3	253.4	65.9	65.9	67.7	66.6	229.50	30.22	6935.49
2006/11/17	10:15:00	1213.2	919.4	283.7	296.8	256.9	261.7	551.4	913.7	264.7	261.9	232.8	253.4	67.7	66.4	68.3	66.0	230.10	30.21	6954.34
2006/11/17	10:16:00	1212.1	920.0	283.7	297.4	255.9	261.9	551.5	825.7	265.4	261.8	232.6	253.5	66.0	66.4	68.4	66.4	230.00	30.26	6962.10
2006/11/17	10:17:00	1212.4	919.3	283.7	296.9	256.4	262.2	551.2	741.0	264.6	261.9	232.7	253.5	66.0	65.6	68.3	64.6	229.60	30.19	6936.22
2006/11/17	10:18:00	1212.0	921.3	283.4	297.5	255.9	261.7	551.5	905.6	264.6	261.9	232.8	253.5	67.0	66.8	66.8	64.6	230.20	30.25	6966.58
2006/11/17	10:19:00	1212.9	919.3	283.6	297.2	256.9	261.6	551.4	842.5	265.5	262.1	232.6	253.5	66.4	66.4	67.3	66.0	229.50	30.21	6933.20
2006/11/17	10:20:00	1212.2	921.7	283.3	297.2	256.5	261.6	551.5	891.3	265.0	262.2	232.8	253.5	67.2	66.0	67.3	66.2	230.10	30.28	6969.73
2006/11/17	10:21:00	1212.2	921.2	283.5	297.2	256.7	261.9	550.8	866.7	265.2	261.8	232.8	253.5	67.2	64.8	67.7	65.9	229.90	30.25	6954.47
2006/11/17	10:22:00	1212.3	921.3	283.5	297.5	255.2	261.4	551.7	909.9	264.7	261.9	232.8	253.5	65.5	65.6	67.8	64.8	230.10	30.28	6967.43
2006/11/17	10:23:00	1212.1	919.9	283.6	297.4	256.2	262.1	551.6	916.0	265.0	261.6	232.8	253.5	66.3	65.7	67.8	65.5	230.10	30.28	6967.43
2006/11/17	10:24:00	1212.2	919.9	283.5	298.3	255.9	262.4	551.9	804.5	265.1	262.1	232.8	253.6	67.3	66.2	67.9	65.9	230.10	30.27	6969.73
2006/11/17	10:25:00	1211.5	920.5	283.5	298.6	256.7	262.1	551.7	821.7	264.9	262.2	233.0	253.6	67.1	65.5	67.5	65.4	229.70	30.25	6951.45
2006/11/17	10:26:00	1212.1	920.6	283.6	296.6	255.9	262.2	552.2	900.1	265.1	261.4	232.7	253.5	66.3	65.2	66.3	64.6	230.20	30.27	6968.15
2006/11/17	10:27:00	1213.4	921.2	283.4	297.0	256.2	261.9	551.4	894.5	264.4	262.2	233.0	253.5	66.8	65.6	66.3	65.5	229.90	30.23	6949.88
2006/11/17	10:28:00	1212.1	922.3	283.5	297.7	256.7	261.4	550.8	806.4	264.7	262.1	233.0	253.5	66.8	64.8	67.3	64.8	230.00	30.27	6965.13
2006/11/17	10:29:00	1212.1	922.0	283.3	298.0	256.4	261.6	552.2	940.5	264.7	262.1	232.6	253.4	66.2	64.0	66.4	64.6	230.10	30.25	6965.13
2006/11/17	10:30:00	1213.3	921.8	283.3	297.1	256.9	261.4	550.2	970.0	264.2	261.9	232.7	253.3	66.6	63.6	66.3	64.8	230.20	30.29	6972.76
2006/11/17	10:31:00	1212.9	917.1	283.3	297.2	257.0	261.4	551.7	851.8	264.9	261.9	232.7	253.4	67.3	65.0	67.3	65.7	229.80	30.27	6965.24
2006/11/17	10:32:00	1212.2	920.0	283.5	298.0	256.9	261.9	552.4	911.7	264.6	261.9	232.7	253.3	66.0	65.3	67.7	66.3	230.20	30.29	6975.06
2006/11/17	10:33:00	1211.9	920.0	283.5	297.6	256.4	261.7	552.1	839.5	264.5	262.1	232.4	253.3	66.0	65.2	67.3	65.4	230.20	30.28	6970.46
2006/11/17	10:34:00	1211.9	919.9	283.5	297.5	256.5	261.7	550.3	786.4	265.0	261.9	232.7	253.4	66.4	65.6	66.3	65.8	230.20	30.28	6970.46
2006/11/17	10:35:00	1212.8	918.8	283.5	297.5	256.4	262.4	550.8	899.6	264.7	262.1	232.4	253.3	66.2	66.0	67.1	65.8	230.20	30.29	6972.76
2006/11/17	10:36:00	1212.9	917.8	282.9	297.6	256.5	261.9	549.9	904.0	265.2	262.4	232.4	253.3	66.2	65.3	67.6	66.3	230.20	30.29	6972.76
2006/11/17	10:37:00	1212.0	923.1	283.4	297.9	255.6	261.9	550.9	817.7	265.1	262.2	232.6	253.3	66.8	64.2	67.8	65.2	230.20	30.29	6972.76
2006/11/17	10:38:00	1211.7	920.4	283.4	297.1	256.5	262.1	551.1	868.7	264.4	262.2	232.4	253.4	67.7	65.6	68.0	65.6	230.20	30.28	6973.48
2006/11/17	10:39:00	1212.5	918.1	283.5	297.8	256.4	262.1	551.2	903.6	265.3	262.4	232.3	253.4	66.8	65.7	67.6	66.3	230.00	30.29	6966.70
2006/11/17	10:40:00	1213.2	918.1	283.1	297.0	256.7	261.9	550.5	860.2	264.6	262.4	232.4	253.4	66.8	63.9	66.6	65.9	230.20	30.28	6970.46
2006/11/17	10:41:00	1212.2	918.1	283.4	297.8	256.1	262.1	551.9	819.7	264.8	261.9	232.5	253.5	67.1	63.8	66.8	65.9	230.20	30.29	6972.76
2006/11/17	10:42:00	1213.0	917.1	283.6	297.4	255.7	262.2	552.1	854.9	264.7	262.1	232.4	253.5	67.0	66.1	67.3	66.2	230.20	30.29	6972.76
2006/11/17	10:43:00	1212.9	920.5	283.5	297.3	257.2	262.1	551.7	915.7	264.2	262.1	232.2	253.4	67.5	65.3	67.7	65.1	230.20	30.29	6972.76
2006/11/17	10:44:00	1213.1	920.6	283.5	297.5	257.2	262.1	552.0	887.3	264.5	262.1	232.2	253.4	67.0	65.6	68.6	65.2	230.20	30.29	6972.76
2006/11/17	10:45:00	1211.9	922.6	283.6	297.2	256.7	261.8	551.1	819.9	265.4	262.2	232.6	253.4	67.6	65.4	68.4	66.1	230.20	30.29	6972.76
2006/11/17	10:46:00	1212.1	921.3	283.8	297.4	256.2	262.4	549.4	833.7	264.5	262.2	232.5	253.4	67.2	65.2	68.0	64.4	230.20	30.29	6972.76
2006/11/17	10:47:00	1213.1	920.4	283.5	297.5	256.2	261.6	551.0	846.4	264.3	261.9	232.5	253.4	67.2	64.8	68.2	64.6	230.20	30.29	6972.76
2006/11/17	10:48:00	1212.1	923.5	283.0	297.2	256.1	261.7	552.9	990.0	264.3	261.9	232.5	253.4	67.0	66.1	67.2	64.8	230.20	30.29	6972.76
2006/11/17	10:49:00	1212.4	919.4	283.4	297.6	255.9	261.4	551.7	881.3	264.7	261.9	232.5	253.3	65.9	65.0	67.0	65.5	230.10	30.26	6969.73
2006/11/17	10:50:00	1212.0	919.0	283.6	298.1	256.4	261.9	551.1	793.2	265.0	261.4	232.7	253.3	65.5	66.8	68.3	65.0	230.20	30.28	6970.46
2006/11/17	10:51:00	1211.9	921.5	283.7	297.6	256.9	262.2	551.3	850.5	265.0	261.7	232.6	253.3	67.8	65.3	68.3	65.3	230.20	30.27	6968.15
2006/11/17	10:52:00	1212.1	918.8	283.6	297.2	256.4	262.2	550.7	911.8	265.3	262.2	232.4	253.4	67.8	66.6	68.3	66.3	230.10	30.28	6969.73
2006/11/17	10:53:00	1211.4	919.9	283.6	298.0	256.1	260.7	551.1	873.4	265.0	262.1	232.2	253.3	65.3	66.2	67.5	66.8	230.00	30.26	6959.80

Heat Rise Test
1st Run

Date	Time	TC1	TC2	TC3	TC4	TC5	TC6	TC7	TC8	TC9	TC10	TC11	TC12	TC13	TC14	TC15	TC16	VDC	Amps	Watts
2006/11/17	10:54:00	1211.7	920.1	283.6	298.0	256.4	261.9	551.7	914.7	264.8	262.6	232.4	253.3	65.2	66.0	67.0	66.0	230.20	30.28	6970.46
2006/11/17	10:55:00	1212.3	921.6	283.5	297.5	256.4	262.2	551.9	854.8	265.0	262.2	232.6	253.4	67.1	65.3	68.6	65.6	230.10	30.26	6962.83
2006/11/17	10:56:00	1212.4	920.6	283.6	297.3	257.0	261.9	551.6	922.9	265.4	262.4	232.6	253.4	67.7	66.4	68.4	65.7	230.20	30.27	6970.46
2006/11/17	10:57:00	1212.3	916.6	283.6	296.8	257.2	261.9	552.2	847.6	265.2	262.2	232.3	253.3	67.5	66.4	68.4	66.3	230.10	30.28	6967.43
2006/11/17	10:58:00	1212.3	922.6	283.5	297.4	256.1	262.1	549.5	786.5	265.2	262.2	232.3	253.3	66.3	66.6	68.2	65.7	230.00	30.27	6964.40
2006/11/17	10:59:00	1212.1	919.6	283.8	297.8	256.2	261.9	552.4	814.2	265.4	262.4	232.2	253.3	67.9	66.8	67.7	67.1	230.20	30.28	6970.46
2006/11/17	11:00:00	1212.2	920.0	283.7	297.0	255.7	262.2	550.9	859.3	264.9	262.4	232.4	253.3	67.7	66.6	67.6	66.1	230.10	30.27	6965.13
2006/11/17	11:01:00	1212.2	921.1	283.8	298.2	256.1	261.9	552.1	815.6	265.1	262.2	232.4	253.3	67.9	65.5	68.6	66.6	230.20	30.28	6972.76
2006/11/17	11:02:00	1211.1	921.0	283.6	298.1	256.2	262.4	551.6	875.4	264.5	262.2	232.5	253.4	67.7	66.1	68.2	66.4	230.10	30.24	6961.25
2006/11/17	11:03:00	1212.8	919.1	283.7	295.6	256.1	261.4	550.7	791.8	264.8	262.1	232.3	253.3	65.9	66.4	66.6	65.9	229.60	30.22	6940.81
2006/11/17	11:04:00	1213.2	919.3	283.7	295.6	255.9	261.3	551.0	765.8	265.1	262.2	232.3	253.3	66.2	66.3	66.6	66.4	230.00	30.27	6964.40
2006/11/17	11:05:00	1213.6	921.3	283.5	297.2	256.7	261.9	552.0	816.9	264.7	262.2	232.5	253.4	67.3	65.7	67.3	65.6	230.10	30.21	6957.36
2006/11/17	11:06:00	1212.3	922.7	283.7	297.8	256.1	261.6	551.3	677.9	265.2	262.4	232.5	253.4	67.5	66.4	68.6	67.1	229.10	30.14	6914.24
2006/11/17	11:07:00	1211.8	922.9	283.7	297.4	256.4	262.4	551.7	719.9	265.3	262.4	232.4	253.4	67.7	67.1	68.2	67.1	230.00	30.27	6962.10
2006/11/17	11:08:00	1211.9	919.4	283.8	297.5	256.7	262.6	551.9	890.9	265.4	262.4	232.5	253.4	66.2	65.7	68.1	65.7	230.00	30.26	6962.10
2006/11/17	11:09:00	1212.9	919.9	283.9	297.8	257.0	262.2	552.6	839.0	265.2	262.4	232.5	253.4	67.2	65.3	68.1	65.5	230.00	30.27	6965.13
2006/11/17	11:10:00	1212.3	919.4	283.9	297.8	256.2	262.4	550.8	933.1	265.3	262.6	232.5	253.4	66.8	65.9	68.6	65.4	229.60	30.23	6949.88
2006/11/17	11:11:00	1212.3	922.6	283.9	298.2	256.2	262.4	551.2	837.9	265.1	262.6	232.6	253.4	66.4	67.1	68.4	65.8	230.10	30.26	6967.43
2006/11/17	11:12:00	1213.3	918.2	283.9	298.0	255.7	261.8	551.3	810.8	265.5	262.7	232.2	253.4	66.8	67.5	67.8	67.1	229.90	30.25	6954.47
2006/11/17	11:13:00	1211.5	920.6	283.6	296.8	255.7	262.1	551.2	876.0	265.4	262.7	232.4	253.4	67.1	66.2	66.6	67.2	230.10	30.27	6965.13
2006/11/17	11:14:00	1213.5	920.1	283.5	296.9	256.4	262.1	552.0	845.1	265.3	262.9	232.5	253.4	65.3	65.9	66.3	67.0	229.80	30.23	6949.88
2006/11/17	11:15:00	1213.2	922.0	283.9	296.9	256.2	262.1	552.6	904.0	265.3	262.4	232.6	253.4	66.6	65.7	67.7	65.7	230.00	30.27	6964.40
2006/11/17	11:16:00	1213.1	919.1	283.7	295.7	256.7	262.1	551.3	862.9	265.2	262.4	232.7	253.4	66.2	66.4	68.1	65.6	230.10	30.27	6965.13
2006/11/17	11:17:00	1212.0	918.4	283.8	297.0	256.2	261.9	550.2	718.8	265.5	262.6	232.6	253.4	66.2	66.6	67.5	66.8	229.70	30.19	6934.64
2006/11/17	11:18:00	1211.4	918.0	283.8	297.9	256.1	262.4	550.0	746.8	265.1	262.1	232.6	253.4	67.5	65.0	68.4	65.5	229.60	30.23	6940.81
2006/11/17	11:19:00	1211.9	920.1	283.8	297.7	256.4	262.2	551.6	758.3	265.0	262.2	232.9	253.3	67.2	66.0	67.5	64.6	230.00	30.24	6959.80
2006/11/17	11:20:00	1212.0	919.6	283.8	297.0	255.9	261.9	551.6	854.9	265.0	262.6	232.7	253.4	67.0	66.4	66.8	66.4	230.00	30.27	6964.40
2006/11/17	11:21:00	1212.2	921.9	283.8	297.0	256.2	262.2	552.0	790.6	265.4	262.2	232.8	253.4	67.3	65.6	67.6	66.0	229.50	30.20	6930.90
2006/11/17	11:22:00	1211.0	917.2	283.9	297.5	255.6	262.1	551.7	787.3	264.2	262.2	232.7	253.3	66.6	65.0	67.5	64.2	229.90	30.27	6959.07
2006/11/17	11:23:00	1211.6	918.8	283.9	296.9	257.4	262.2	548.9	838.5	265.2	262.1	232.5	253.4	67.3	65.9	68.4	65.9	229.40	30.21	6930.17
2006/11/17	11:24:00	1212.2	919.9	283.9	296.2	256.7	262.1	551.0	795.4	265.1	262.4	232.5	253.4	65.7	65.8	68.1	66.0	229.90	30.19	6940.68
2006/11/17	11:25:00	1213.0	918.6	283.9	296.8	256.2	261.9	551.0	709.6	264.9	262.2	232.4	253.4	66.6	64.1	67.9	64.8	230.10	30.25	6960.53
2006/11/17	11:26:00	1211.9	920.4	283.9	296.6	256.2	262.2	551.8	727.8	265.5	262.7	232.6	253.4	66.2	65.6	66.8	65.7	229.90	30.27	6959.07
2006/11/17	11:27:00	1211.7	920.2	283.9	297.5	254.9	262.2	550.9	841.4	265.7	262.7	232.5	253.4	66.6	65.9	67.3	66.1	230.20	30.29	6972.76
2006/11/17	11:28:00	1211.8	920.4	283.8	297.2	255.9	262.1	551.3	720.1	265.5	262.4	232.3	253.4	66.2	66.2	66.4	65.9	229.80	30.27	6956.05
2006/11/17	11:29:00	1212.5	919.3	283.8	296.7	256.9	261.4	551.9	801.5	264.8	262.4	232.5	253.4	66.2	65.1	67.0	65.3	230.10	30.27	6968.15
2006/11/17	11:30:00	1212.8	918.8	283.9	297.4	255.6	262.1	550.3	776.6	265.6	262.6	232.3	253.4	65.7	65.8	66.6	65.5	230.00	30.25	6963.55
2006/11/17	11:31:00	1213.0	919.1	283.9	296.4	255.7	262.1	549.5	810.6	265.0	262.6	232.3	253.4	67.5	64.8	66.6	65.4	230.10	30.27	6967.43
2006/11/17	11:32:00	1211.9	921.2	283.9	298.1	256.1	262.2	551.9	810.6	265.7	262.7	232.8	253.4	65.7	66.1	67.2	65.9	229.90	30.25	6969.60
2006/11/17	11:33:00	1211.9	917.5	283.9	297.5	255.3	261.6	550.9	834.5	265.7	262.7	232.4	253.4	66.4	66.0	67.3	66.3	230.00	30.26	6959.80
2006/11/17	11:34:00	1212.0	918.2	283.9	296.9	256.9	261.9	550.9	808.5	265.3	262.7	232.5	253.4	67.0	65.3	68.2	66.1	230.10	30.27	6968.15
2006/11/17	11:35:00	1212.1	918.3	283.9	296.7	256.2	262.2	552.3	666.2	265.0	262.6	232.7	253.4	67.1	64.6	68.1	65.3	230.10	30.28	6969.73
2006/11/17	11:36:00	1212.2	918.6	283.8	296.6	255.4	261.9	551.5	759.3	264.8	262.4	232.6	253.4	66.8	65.5	67.6	65.6	230.00	30.26	6959.80
2006/11/17	11:37:00	1213.5	919.9	283.8	297.6	255.9	262.1	549.9	823.1	265.5	262.1	232.8	253.3	67.3	65.5	67.2	66.1	230.00	30.16	6936.80
2006/11/17	11:38:00	1213.6	920.0	283.8	297.1	257.0	262.1	550.3	833.4	265.3	262.4	232.9	253.4	66.8	65.6	67.6	65.6	229.00	30.14	6902.06
2006/11/17	11:39:00	1211.5	920.0	283.4	297.8	256.1	262.1	551.4	829.2	265.2	262.7	232.9	253.4	67.0	65.0	67.9	65.4	230.00	30.25	6962.10
2006/11/17	11:40:00	1211.6	921.0	283.8	297.4	256.1	261.9	551.4	830.8	264.8	262.4	232.9	253.4	66.8	65.1	67.6	65.2	229.80	30.25	6951.45
2006/11/17	11:41:00	1212.9	920.4	283.9	297.4	256.7	262.2	552.1	848.9	265.5	262.2	232.9	253.5	66.8	65.1	67.6	65.5	230.00	30.23	6952.90
2006/11/17	11:42:00	1213.1	920.4	283.8	297.4	256.9	262.6	551.5	687.1	265.2	262.6	232.6	253.4	66.6	66.1	68.6	66.4	229.60	30.24	6943.10
2006/11/17	11:43:00	1212.6	920.9	283.8	297.9	256.9	261.8	551.9	714.7	265.6	262.4	232.7	253.4	67.1	65.3	68.2	65.7	230.00	30.26	6959.80
2006/11/17	11:44:00	1211.6	922.1	283.9	298.1	257.0	262.2	549.2	817.4	265.1	262.4	232.9	253.4	67.7	65.7	68.6	65.8	229.90	30.25	6956.77
2006/11/17	11:45:00	1211.7	919.4	283.7	297.0	255.9	262.4	548.3	629.7	265.1	262.4	232.6	253.4	67.3	66.4	68.4	66.3	230.00	30.21	6952.90
2006/11/17	11:46:00	1212.9	919.9	283.7	297.3	256.2	262.2	550.7	755.0	265.3	262.2	232.8	253.4	67.0	66.2	67.8	66.0	230.20	30.28	6970.46
2006/11/17	11:47:00	1211.9	919.4	283.9	297.3	256.7	262.2	549.9	816.5	264.7	261.7	232.7	253.4	66.8	66.1	67.7	66.1	230.00	30.27	6964.40
2006/11/17	11:48:00	1213.3	919.3	283.9	297.0	256.7	262.2	550.8	831.3	265.0	262.4	232.8	253.4	67.6	65.4	67.2	66.8	230.00	30.27	6966.70
2006/11/17	11:49:00	1212.6	919.6	283.9	297.0	256.4	262.2	551.1	845.6	265.1	262.9	232.7	253.4	67.1	66.3	67.7	66.8	229.70	30.21	6939.24

Heat Rise Test
1st Run

Date	Time	TC1	TC2	TC3	TC4	TC5	TC6	TC7	TC8	TC9	TC10	TC11	TC12	TC13	TC14	TC15	TC16	VDC	Amps	Watts
2006/11/17	11:50:00	1212.8	919.4	283.9	297.1	255.9	261.7	550.7	752.5	265.4	262.4	232.7	253.4	66.3	64.6	68.3	66.4	229.20	30.17	6914.96
2006/11/17	11:51:00	1212.2	917.7	283.9	297.4	256.2	262.1	550.0	822.5	264.8	262.2	232.6	253.4	66.6	63.6	67.9	64.3	229.40	30.21	6930.17
2006/11/17	11:52:00	1211.3	917.7	283.9	296.6	255.9	262.2	550.7	656.6	265.3	262.2	232.4	253.3	66.8	65.4	67.5	64.6	229.30	30.22	6931.74
2006/11/17	11:53:00	1212.5	920.1	283.9	297.1	256.7	262.2	550.5	819.6	265.0	262.6	232.7	253.3	67.3	65.4	67.7	65.4	230.20	30.27	6968.15
2006/11/17	11:54:00	1211.1	923.0	283.9	297.6	257.2	262.6	550.0	845.4	265.3	262.6	232.7	253.4	67.5	66.2	67.9	66.4	229.80	30.24	6949.15
2006/11/17	11:55:00	1212.0	922.6	283.9	297.3	255.4	262.2	549.9	773.8	264.9	262.4	232.7	253.4	67.6	66.6	68.3	66.6	229.70	30.20	6936.94
2006/11/17	11:56:00	1212.3	923.2	284.1	297.7	256.4	262.7	549.9	791.4	265.5	262.6	232.7	253.4	67.5	65.8	68.6	66.8	229.10	30.17	6911.95
2006/11/17	11:57:00	1212.0	920.4	283.9	297.0	256.7	262.4	549.9	751.0	265.7	262.7	232.6	253.4	66.8	66.2	68.3	65.9	229.10	30.12	6900.49
2006/11/17	11:58:00	1212.3	919.0	283.9	297.9	256.7	262.7	549.9	811.7	265.4	262.7	232.8	253.4	67.5	66.4	68.2	65.6	229.00	30.13	6902.06
2006/11/17	11:59:00	1212.6	919.3	284.2	298.2	257.4	262.2	549.9	801.5	265.2	262.6	232.6	253.4	67.7	66.2	68.8	66.8	229.00	30.13	6907.37
2006/11/17	12:00:00	1211.6	920.8	283.9	297.9	257.2	262.1	550.9	682.5	265.0	261.9	232.7	253.4	67.7	65.7	67.7	66.8	229.10	30.14	6912.67
2006/11/17	12:01:00	1211.1	921.8	284.1	297.0	256.5	262.4	551.7	812.4	264.5	262.2	232.9	253.4	67.6	67.0	67.9	66.6	229.30	30.19	6922.57
2006/11/17	12:02:00	1211.4	920.4	283.9	298.3	257.4	262.4	549.2	752.9	265.3	262.4	232.8	253.4	67.3	66.6	67.3	66.4	229.50	30.22	6935.49
2006/11/17	12:03:00	1211.7	919.7	283.9	297.8	256.1	262.6	549.9	900.0	265.6	262.4	232.6	253.4	67.1	66.8	67.3	66.2	229.50	30.22	6935.49
2006/11/17	12:04:00	1212.4	919.3	284.1	297.7	256.2	262.4	549.9	779.5	265.6	262.7	232.6	253.5	68.1	66.8	67.8	66.6	229.20	30.07	6910.09
2006/11/17	12:05:00	1212.2	919.6	284.2	298.0	257.2	262.4	550.7	742.4	264.9	262.4	232.8	253.5	67.7	66.1	68.6	66.2	229.00	30.15	6904.35
2006/11/17	12:06:00	1211.9	919.9	284.2	297.3	256.9	262.1	551.1	685.2	265.0	262.2	232.7	253.5	67.2	65.7	68.8	66.6	229.00	30.15	6904.35
2006/11/17	12:07:00	1212.3	919.1	284.1	296.0	256.7	262.1	550.2	796.5	264.6	262.4	232.8	253.4	67.8	66.3	68.6	65.9	229.00	30.17	6908.93
2006/11/17	12:08:00	1212.4	920.6	284.2	297.0	257.2	262.4	550.5	832.9	265.1	262.1	232.8	253.5	68.0	66.6	68.6	66.8	229.00	30.17	6908.93
2006/11/17	12:09:00	1212.9	921.1	284.1	297.0	256.9	262.4	548.9	902.8	265.7	262.6	232.5	253.4	67.5	66.3	67.8	67.0	229.10	30.22	6941.53
2006/11/17	12:10:00	1212.5	920.0	284.1	297.4	256.7	261.9	550.4	826.6	265.2	262.4	232.8	253.5	67.7	66.0	67.9	66.1	229.50	30.20	6930.90
2006/11/17	12:11:00	1212.8	918.0	284.1	297.1	256.2	262.2	549.9	768.5	265.0	262.2	232.9	253.4	68.0	65.8	68.6	65.7	229.80	30.24	6949.15
2006/11/17	12:12:00	1212.1	922.9	283.8	296.2	257.7	262.1	550.4	815.1	265.0	262.4	232.8	253.4	67.8	66.8	68.2	65.5	229.40	30.11	6925.30
2006/11/17	12:13:00	1213.6	916.9	284.3	297.1	257.4	262.4	548.3	705.4	265.6	262.1	232.7	253.4	67.9	66.6	68.3	66.1	229.60	30.19	6937.66
2006/11/17	12:14:00	1212.4	918.3	284.3	297.8	257.0	262.7	548.7	818.6	265.6	262.4	232.5	253.5	68.0	66.6	68.1	66.1	229.60	30.22	6940.81
2006/11/17	12:15:00	1212.6	919.9	284.2	296.5	256.9	262.4	548.4	848.9	265.5	262.2	232.7	253.5	68.2	66.8	68.8	66.3	229.80	30.24	6949.15
2006/11/17	12:16:00	1212.6	921.4	284.3	297.4	256.9	262.7	549.2	814.0	265.4	262.7	232.8	253.5	68.0	66.8	68.8	66.3	230.20	30.10	6929.02
2006/11/17	12:17:00	1212.5	921.4	284.1	297.8	255.9	262.6	549.2	821.5	265.3	262.4	232.6	253.5	67.3	67.3	68.1	67.1	229.80	30.23	6946.85
2006/11/17	12:18:00	1211.1	921.0	283.9	297.3	256.2	262.9	548.8	682.1	265.6	262.9	232.5	253.5	66.0	67.6	67.6	68.0	229.90	30.22	6947.58
2006/11/17	12:19:00	1212.1	922.0	284.2	296.9	256.5	261.9	549.5	764.5	265.2	262.2	232.7	253.5	67.3	65.6	68.6	66.6	229.40	30.19	6925.59
2006/11/17	12:20:00	1211.6	918.5	284.3	297.2	256.5	262.4	549.9	796.0	265.6	262.2	232.6	253.5	66.8	66.4	68.0	67.0	228.50	30.09	6875.57
2006/11/17	12:21:00	1212.6	918.5	284.2	296.1	256.9	262.4	548.9	810.7	266.1	262.9	232.4	253.5	67.3	67.3	68.1	67.7	229.60	30.21	6936.22
2006/11/17	12:22:00	1212.9	921.1	284.2	296.4	256.7	262.6	549.1	805.6	265.9	263.0	232.6	253.5	66.4	67.3	67.5	67.3	230.20	30.27	6968.15
2006/11/17	12:23:00	1212.2	920.4	284.3	297.7	256.5	261.9	549.2	816.9	266.2	263.0	232.4	253.5	67.3	67.3	68.1	66.8	229.70	30.20	6943.83
2006/11/17	12:24:00	1211.1	922.6	284.2	297.7	256.4	262.4	549.1	800.2	265.8	262.9	232.7	253.6	66.6	66.1	68.0	67.1	229.80	30.18	6946.85
2006/11/17	12:25:00	1212.5	920.9	284.1	297.6	256.5	262.6	549.2	822.4	265.7	263.2	232.9	253.6	66.6	65.7	68.1	66.3	229.10	30.18	6914.24
2006/11/17	12:26:00	1212.4	918.3	284.2	297.9	256.2	262.4	551.4	773.8	265.8	263.0	232.9	253.6	67.7	65.8	67.5	66.4	229.20	30.19	6919.55
2006/11/17	12:27:00	1212.1	920.7	284.2	298.6	256.7	262.7	549.1	780.1	265.8	263.4	232.8	253.7	67.3	66.8	68.4	67.0	229.50	30.17	6930.90
2006/11/17	12:28:00	1211.1	920.0	283.9	297.9	256.1	262.6	549.2	693.8	265.2	263.2	233.2	253.7	67.9	66.8	67.6	65.5	229.60	30.21	6938.51
2006/11/17	12:29:00	1211.1	921.8	284.3	296.7	256.1	262.1	549.9	726.8	265.6	262.9	232.6	253.7	66.0	68.6	67.7	65.5	228.00	30.08	6886.16
2006/11/17	12:30:00	1211.6	919.4	284.2	297.6	256.4	262.2	550.2	693.0	265.6	263.2	232.7	253.6	67.7	66.4	67.8	67.0	229.60	30.15	6936.22
2006/11/17	12:31:00	1211.5	919.6	284.3	297.1	256.2	262.6	550.8	799.7	266.1	262.9	232.8	253.7	67.3	67.9	68.2	66.6	229.00	30.16	6906.64
2006/11/17	12:32:00	1211.7	920.7	284.4	297.8	256.2	262.2	551.0	662.9	265.7	263.4	232.8	253.8	66.8	66.8	68.0	67.9	229.90	30.25	6954.47
2006/11/17	12:33:00	1211.5	917.4	284.1	297.6	257.0	262.7	549.1	781.9	265.7	263.4	233.1	253.9	68.6	67.1	69.1	67.3	229.50	30.19	6928.61
2006/11/17	12:34:00	1210.2	919.6	284.4	296.9	256.4	262.6	550.9	753.2	266.0	263.2	232.9	253.8	67.7	67.8	69.6	67.3	230.10	30.27	6965.13
2006/11/17	12:35:00	1210.2	919.6	284.4	298.0	256.7	262.2	547.1	795.2	266.0	262.9	232.6	253.7	68.3	67.0	68.4	67.9	230.20	30.28	6970.46
2006/11/17	12:36:00	1212.2	920.2	283.9	296.5	256.7	262.4	549.9	833.7	265.8	263.4	232.6	253.6	66.8	67.1	68.1	67.6	230.00	30.26	6959.80
2006/11/17	12:37:00	1211.9	918.6	284.3	298.2	257.4	262.7	549.7	733.6	265.9	263.2	232.9	253.7	67.8	67.1	68.4	67.3	229.60	30.13	6941.95
2006/11/17	12:38:00	1211.9	919.1	284.3	296.6	256.2	262.7	550.2	709.9	265.8	263.2	233.0	253.7	67.7	67.5	69.1	66.4	229.60	30.20	6933.92
2006/11/17	12:39:00	1212.3	918.9	284.3	297.0	256.7	262.7	550.2	699.3	265.6	263.4	233.0	253.7	67.0	66.8	68.1	67.1	230.10	30.24	6958.22
2006/11/17	12:40:00	1211.9	921.0	284.3	297.0	255.9	262.4	549.9	715.9	265.5	263.5	232.8	253.7	65.8	65.4	67.6	67.2	229.50	30.23	6937.79
2006/11/17	12:41:00	1211.1	920.9	284.2	297.8	255.6	262.4	549.4	639.5	264.8	262.7	232.8	253.7	67.9	66.6	68.3	66.6	229.70	30.23	6948.43
2006/11/17	12:42:00	1211.9	920.2	284.2	296.7	255.6	262.1	550.2	721.3	266.0	262.9	232.8	253.8	67.1	66.8	67.9	66.4	229.20	30.18	6917.26
2006/11/17	12:43:00	1212.8	919.9	284.3	297.6	256.4	262.4	549.7	686.3	265.6	263.0	232.7	253.7	66.6	66.1	68.4	65.2	230.00	30.25	6957.50
2006/11/17	12:44:00	1211.9	919.9	284.2	297.5	257.2	262.4	549.5	762.7	265.6	262.7	232.7	253.6	67.3	65.3	67.8	64.8	230.10	30.27	6965.13
2006/11/17	12:45:00	1211.5	923.0	284.3	297.7	257.8	262.1	550.3	695.8	265.4	263.2	232.9	253.6	67.7	66.1	68.1	65.9	230.00	30.26	6962.10

Heat Rise Test
1st Run

Date	Time	TC1	TC2	TC3	TC4	TC5	TC6	TC7	TC8	TC9	TC10	TC11	TC12	TC13	TC14	TC15	TC16	VDC	Amps	Watts
2006/11/17	12:46:00	1211.6	921.1	284.3	297.9	256.7	262.4	550.7	755.3	265.7	262.9	232.9	253.6	67.6	66.6	68.2	66.6	230.10	30.26	6962.83
2006/11/17	12:47:00	1211.3	923.2	284.1	296.6	256.7	262.2	549.4	692.1	265.7	262.7	232.7	253.5	66.6	65.0	67.9	66.8	229.90	30.26	6956.77
2006/11/17	12:48:00	1211.5	920.4	284.2	297.8	256.5	262.4	550.0	781.0	264.9	262.9	232.9	253.5	67.2	64.8	67.8	66.2	230.10	30.20	6949.02
2006/11/17	12:49:00	1212.1	919.6	284.2	297.0	256.4	262.1	550.8	781.7	265.2	262.9	232.7	253.5	67.3	66.6	67.9	66.0	230.00	30.21	6954.34
2006/11/17	12:50:00	1212.6	919.6	284.2	296.4	256.4	262.2	550.8	719.7	264.9	262.9	232.7	253.5	67.0	67.2	68.0	66.3	229.30	30.24	6940.91
2006/11/17	12:51:00	1212.8	920.2	284.1	296.4	255.3	261.9	550.7	792.8	265.6	262.9	232.6	253.5	66.0	65.9	67.9	66.2	230.10	30.23	6955.92
2006/11/17	12:52:00	1211.1	923.4	284.3	298.0	256.4	261.9	550.5	690.3	265.4	262.9	232.9	253.5	67.2	65.3	67.7	66.2	229.90	30.25	6956.77
2006/11/17	12:53:00	1211.3	920.4	284.3	297.4	256.1	262.1	549.9	744.5	265.5	263.0	233.0	253.5	67.3	65.4	68.0	66.0	230.10	30.25	6960.53
2006/11/17	12:54:00	1211.5	921.0	284.2	297.7	255.9	262.7	549.7	740.5	265.7	263.0	233.0	253.5	67.2	66.8	67.8	66.8	229.20	30.23	6933.30
2006/11/17	12:55:00	1211.9	918.6	284.3	297.7	256.7	262.7	550.7	755.3	266.3	263.2	232.9	253.7	66.3	66.1	67.5	66.2	229.00	30.01	6911.30
2006/11/17	12:56:00	1211.9	919.1	284.4	296.9	257.2	262.7	551.2	700.2	266.4	263.2	232.8	253.6	67.0	66.8	67.1	66.6	229.00	30.15	6925.45
2006/11/17	12:57:00	1211.4	922.1	284.4	296.8	256.4	261.9	551.8	757.5	266.3	263.5	232.7	253.6	67.3	67.6	67.3	67.5	229.60	30.10	6947.08
2006/11/17	12:58:00	1211.6	918.4	284.4	296.8	255.9	262.2	549.9	676.8	265.4	263.2	232.7	253.7	66.6	67.3	67.6	67.5	229.80	30.24	6953.75
2006/11/17	12:59:00	1211.8	919.9	284.4	297.4	255.9	262.2	550.0	680.6	265.8	263.2	232.8	253.7	66.4	66.2	67.3	66.8	229.90	30.13	6938.94
2006/11/17	13:00:00	1211.9	921.8	284.4	297.6	256.4	262.2	551.3	686.9	265.8	263.2	233.0	253.7	68.4	65.8	68.6	66.6	229.70	30.26	6950.72
2006/11/17	13:01:00	1211.9	920.1	284.4	297.9	256.1	262.6	550.3	654.6	265.6	262.9	233.0	253.7	68.3	67.3	68.0	67.5	229.50	30.08	6921.41
2006/11/17	13:02:00	1212.2	920.7	284.4	297.6	256.4	262.7	550.9	704.8	265.5	263.2	233.1	253.7	67.5	67.3	68.2	66.2	229.60	30.23	6943.83
2006/11/17	13:03:00	1212.9	919.3	284.4	297.0	257.2	262.6	551.6	719.2	265.5	263.2	233.1	253.7	67.3	67.2	68.6	65.7	230.10	30.28	6967.43
2006/11/17	13:04:00	1211.9	920.5	284.3	297.3	256.7	262.4	551.7	795.5	265.7	263.4	233.0	253.7	66.8	67.1	68.0	66.8	230.10	30.27	6965.13
2006/11/17	13:05:00	1212.6	918.1	284.4	297.8	256.5	262.4	550.5	683.6	265.6	263.2	232.9	253.8	67.1	66.6	68.2	66.3	230.20	30.29	6972.76
2006/11/17	13:06:00	1211.7	920.5	284.4	297.4	256.7	261.9	548.8	709.4	265.9	263.2	233.1	253.8	68.0	67.2	67.1	66.3	230.20	30.28	6970.46
2006/11/17	13:07:00	1211.9	920.4	284.4	296.9	257.0	262.9	550.8	721.2	266.1	263.4	233.0	253.8	66.3	67.3	68.1	67.6	230.30	30.29	6975.79
2006/11/17	13:08:00	1211.3	918.6	284.6	298.6	257.2	262.7	551.0	721.2	265.9	263.5	232.9	253.8	67.0	67.2	67.9	67.3	230.10	30.28	6967.43
2006/11/17	13:09:00	1211.6	919.0	284.6	297.2	257.4	262.7	550.9	693.3	265.6	263.5	233.1	253.8	67.6	67.2	69.1	66.8	230.20	30.28	6972.76
2006/11/17	13:10:00	1211.9	919.9	284.6	296.7	257.2	263.2	550.2	708.9	265.9	263.2	233.0	253.8	67.6	67.3	69.3	66.6	230.10	30.25	6960.53
2006/11/17	13:11:00	1211.8	919.6	284.4	297.9	257.7	262.4	550.5	672.9	265.8	263.4	233.0	253.7	67.7	67.3	69.3	67.2	230.10	30.25	6960.53
2006/11/17	13:12:00	1211.0	919.3	284.4	297.8	256.7	262.7	550.3	632.7	265.5	263.4	232.8	253.8	66.8	65.6	68.8	66.0	230.20	30.29	6972.76
2006/11/17	13:13:00	1210.9	921.2	284.4	297.2	256.7	262.1	551.2	694.3	265.0	262.4	233.1	253.8	67.8	65.2	68.8	65.6	230.20	30.28	6970.46
2006/11/17	13:14:00	1211.8	918.9	284.6	297.0	257.0	262.7	549.7	664.0	265.6	262.9	232.7	253.8	67.8	67.3	69.1	66.8	230.20	30.28	6970.46
2006/11/17	13:15:00	1212.6	919.4	284.6	297.3	257.0	262.9	548.6	710.8	265.4	262.7	232.9	253.8	68.6	67.3	69.1	66.8	230.20	30.29	6972.76
2006/11/17	13:16:00	1211.7	922.6	284.6	297.3	257.2	262.6	551.5	684.4	265.8	263.2	232.9	253.7	66.3	67.1	69.6	67.1	230.20	30.29	6972.76
2006/11/17	13:17:00	1210.7	921.5	284.4	298.4	256.9	262.1	549.9	691.2	265.1	262.9	233.0	253.8	67.0	66.4	68.1	65.8	230.20	30.29	6972.76
2006/11/17	13:18:00	1211.0	921.8	284.4	298.6	256.9	262.9	551.5	692.0	266.5	263.4	232.7	253.8	67.3	68.1	68.4	67.3	230.20	30.28	6972.76
2006/11/17	13:19:00	1210.8	919.0	284.8	296.7	257.0	262.4	550.3	651.4	266.5	263.8	232.6	253.9	67.5	69.0	67.5	68.2	230.10	30.28	6967.43
2006/11/17	13:20:00	1210.7	921.1	284.7	298.0	257.4	262.7	550.4	772.1	266.3	263.5	232.7	253.9	68.1	67.3	67.6	67.3	230.20	30.28	6970.46
2006/11/17	13:21:00	1211.7	918.7	284.7	296.1	257.9	262.6	551.0	710.1	266.4	263.9	232.8	253.9	67.6	67.7	68.1	67.5	230.20	30.29	6972.76
2006/11/17	13:22:00	1211.6	920.6	284.8	297.9	256.7	262.6	552.3	691.4	266.2	263.7	232.9	253.9	67.0	67.5	68.1	67.2	230.20	30.29	6972.76
2006/11/17	13:23:00	1211.6	921.4	284.8	298.0	257.0	262.9	552.7	756.8	266.4	263.9	233.0	254.0	67.2	68.2	67.9	67.5	230.20	30.29	6972.76
2006/11/17	13:24:00	1212.9	920.1	284.9	297.7	257.7	262.7	551.1	858.4	267.1	264.0	232.8	254.0	67.8	68.6	68.2	68.3	230.30	30.29	6975.79
2006/11/17	13:25:00	1211.5	920.6	284.8	298.5	257.4	262.9	551.5	720.2	266.1	264.0	233.0	254.0	67.6	67.5	67.5	66.2	230.20	30.29	6972.76
2006/11/17	13:26:00	1211.0	917.6	284.8	298.3	257.4	262.7	552.3	687.3	266.7	264.4	232.9	254.0	67.6	68.4	68.6	67.8	230.20	30.29	6972.76
2006/11/17	13:27:00	1211.4	920.4	284.9	297.9	256.7	262.9	552.3	684.8	266.4	264.0	233.1	254.0	67.6	67.9	69.3	67.7	230.20	30.29	6972.76
2006/11/17	13:28:00	1212.1	919.9	284.9	298.2	257.7	262.7	551.2	757.2	266.0	264.0	232.7	253.9	67.5	69.1	69.1	68.6	230.20	30.29	6972.76
2006/11/17	13:29:00	1211.9	920.0	284.9	297.7	257.7	263.0	551.5	803.1	266.0	263.9	233.0	254.0	68.2	67.8	68.6	67.5	230.20	30.29	6972.76
2006/11/17	13:30:00	1212.0	917.5	284.9	297.5	256.2	262.4	548.8	737.7	266.9	263.9	233.0	254.0	67.7	69.0	68.6	67.7	230.20	30.29	6972.76
2006/11/17	13:31:00	1211.9	917.5	284.9	298.1	256.2	262.7	550.9	748.8	266.9	264.2	232.9	254.0	68.2	68.4	68.2	68.3	230.20	30.28	6972.76
2006/11/17	13:32:00	1212.9	922.6	284.7	298.2	256.5	262.7	551.2	775.1	266.4	264.3	233.1	254.0	67.0	66.8	68.1	67.5	230.20	30.28	6972.76
2006/11/17	13:33:00	1213.6	916.4	284.8	297.3	256.4	262.7	550.7	792.5	266.3	263.9	233.2	254.0	67.5	67.0	67.9	67.2	230.30	30.28	6973.48
2006/11/17	13:34:00	1212.0	920.2	284.7	298.4	257.2	262.6	551.3	765.2	266.4	263.8	233.2	253.9	68.3	67.5	68.4	67.1	230.20	30.28	6970.46
2006/11/17	13:35:00	1211.9	917.4	284.8	297.8	256.7	262.6	550.0	711.8	265.7	263.8	233.2	253.9	68.3	66.3	68.6	67.1	230.30	30.29	6975.79
2006/11/17	13:36:00	1212.0	917.1	284.8	298.3	257.5	262.6	550.9	748.2	265.8	263.7	233.1	253.9	68.2	66.2	68.3	66.6	230.20	30.29	6972.76
2006/11/17	13:37:00	1211.9	921.7	284.6	297.5	256.9	262.7	551.5	713.7	266.3	263.7	233.1	253.9	68.3	67.5	67.9	67.1	230.20	30.29	6972.76
2006/11/17	13:38:00	1212.4	921.7	284.9	297.6	257.2	262.7	552.0	789.1	266.3	263.9	233.0	253.9	67.3	67.8	68.2	67.3	230.20	30.29	6972.76
2006/11/17	13:39:00	1211.4	920.4	284.4	298.3	256.9	262.9	552.3	682.5	266.4	264.2	233.0	253.8	67.5	67.5	67.8	67.3	230.20	30.28	6972.76
2006/11/17	13:40:00	1211.2	920.1	284.7	297.9	257.4	263.4	551.5	720.5	266.6	264.0	233.0	253.9	68.1	68.4	68.0	67.7	230.20	30.27	6968.15
2006/11/17	13:41:00	1211.9	917.9	284.7	297.5	256.7	262.7	551.8	674.6	266.3	264.4	232.8	253.9	68.1	69.3	68.4	68.0	230.10	30.28	6970.46

Heat Rise Test
1st Run

Date	Time	TC1	TC2	TC3	TC4	TC5	TC6	TC7	TC8	TC9	TC10	TC11	TC12	TC13	TC14	TC15	TC16	VDC	Amps	Watts
2006/11/17	13:42:00	1211.8	918.4	284.9	297.7	258.3	262.9	550.7	768.7	265.9	264.0	232.9	253.8	68.4	67.6	69.6	67.1	230.20	30.28	6972.76
2006/11/17	13:43:00	1213.5	917.5	284.9	297.5	256.7	262.9	550.8	794.1	266.6	263.9	233.1	253.8	68.8	67.2	69.3	67.3	229.90	30.27	6961.37
2006/11/17	13:44:00	1212.8	920.8	284.6	297.6	256.4	262.9	552.3	823.1	266.1	264.2	232.9	253.8	67.7	68.0	69.3	67.3	230.10	30.25	6966.58
2006/11/17	13:45:00	1212.5	920.8	284.9	297.9	256.9	263.0	553.7	788.5	266.5	264.0	232.9	253.8	68.0	67.8	68.6	67.0	230.10	30.28	6967.43
2006/11/17	13:46:00	1212.4	921.3	284.8	297.7	258.4	262.9	550.7	802.3	266.5	264.4	232.9	253.8	67.7	67.8	68.1	68.0	230.00	30.28	6964.40
2006/11/17	13:47:00	1211.3	920.2	284.9	298.4	257.5	262.7	550.0	775.5	266.3	264.4	233.1	253.9	67.8	66.8	68.3	67.1	230.00	30.27	6964.40
2006/11/17	13:48:00	1211.8	920.2	284.6	298.2	257.4	262.9	551.1	675.6	266.0	264.3	233.0	253.8	67.6	67.3	68.6	67.5	230.20	30.27	6970.46
2006/11/17	13:49:00	1211.4	920.4	284.8	297.5	257.2	262.9	553.9	724.3	266.2	264.2	233.2	253.8	67.5	66.6	68.8	67.1	229.50	30.23	6943.10
2006/11/17	13:50:00	1213.0	922.0	284.8	297.6	257.4	263.0	550.2	720.3	266.2	264.3	233.2	253.9	67.8	67.2	69.1	66.8	228.30	30.20	6928.91
2006/11/17	13:51:00	1210.9	921.8	284.8	298.9	257.0	262.7	551.9	655.3	266.6	264.2	233.4	253.9	68.4	67.3	69.5	67.6	230.00	30.25	6957.50
2006/11/17	13:52:00	1211.1	921.1	284.8	297.7	257.2	262.9	552.2	679.6	266.3	264.2	233.0	253.9	67.5	66.8	69.1	67.1	230.00	30.25	6957.50
2006/11/17	13:53:00	1211.4	921.0	284.9	297.3	257.5	262.9	551.9	701.4	265.4	263.9	233.1	254.0	68.0	67.6	68.3	67.1	228.80	30.22	6918.91
2006/11/17	13:54:00	1211.1	922.1	284.8	298.2	256.2	262.9	552.3	693.1	266.1	264.2	233.2	254.0	67.9	68.0	69.1	67.5	228.50	30.09	6902.65
2006/11/17	13:55:00	1210.4	920.1	284.9	297.8	257.4	262.9	550.2	727.0	266.4	264.2	233.1	254.0	68.0	67.8	68.6	67.5	229.90	30.20	6942.98
2006/11/17	13:56:00	1211.2	921.3	284.8	297.9	257.4	262.7	552.4	697.0	267.1	264.2	233.0	253.9	67.8	68.4	69.1	67.7	229.30	30.11	6917.98
2006/11/17	13:57:00	1211.4	917.6	284.7	298.3	256.2	262.9	552.4	743.5	266.9	264.3	233.1	253.9	67.3	68.2	68.6	68.0	229.20	30.05	6905.49
2006/11/17	13:58:00	1211.9	918.1	284.8	298.6	257.2	262.9	550.8	712.0	266.1	264.4	233.0	253.9	66.8	66.1	68.6	67.0	229.40	30.22	6932.47
2006/11/17	13:59:00	1211.9	919.6	284.8	298.1	257.8	262.7	552.0	790.4	267.1	264.4	233.0	253.9	67.0	67.1	68.4	67.1	227.50	29.98	6820.45
2006/11/17	14:00:00	1211.2	917.6	284.8	298.2	256.4	263.2	552.4	741.3	266.4	264.2	233.1	253.9	68.2	67.8	69.1	67.1	229.60	30.12	6927.03
2006/11/17	14:01:00	1211.4	921.0	284.4	297.9	257.2	262.9	552.7	702.8	266.5	264.0	233.2	253.9	67.3	66.8	68.6	67.1	229.40	30.12	6939.82
2006/11/17	14:02:00	1210.9	920.6	284.8	298.1	256.4	263.2	552.2	734.8	266.5	264.2	233.3	253.9	67.7	67.0	68.8	67.0	229.90	30.24	6952.18
2006/11/17	14:03:00	1212.2	920.0	284.8	297.4	257.2	262.9	552.6	733.8	266.8	264.3	233.1	253.9	67.6	67.8	68.8	67.3	229.30	30.17	6922.57
2006/11/17	14:04:00	1211.7	918.7	284.9	297.5	258.2	262.9	551.8	716.8	267.2	264.7	233.2	253.9	67.7	67.8	69.5	67.8	229.20	30.20	6936.94
2006/11/17	14:05:00	1211.2	921.1	284.9	297.9	256.9	262.7	552.6	716.8	266.6	264.7	233.2	254.0	67.1	67.1	67.9	67.3	228.50	30.05	6866.43
2006/11/17	14:06:00	1211.1	919.4	284.9	297.9	256.9	262.9	551.4	784.6	266.7	264.3	233.3	254.0	68.1	67.2	67.7	67.2	228.70	30.05	6878.45
2006/11/17	14:07:00	1211.3	921.6	284.9	297.9	257.4	262.7	551.8	688.6	266.5	264.4	233.5	254.1	67.7	65.7	68.2	66.6	227.50	29.97	6849.84
2006/11/17	14:08:00	1211.3	920.5	284.9	297.2	257.4	262.7	552.4	772.7	266.1	264.2	233.5	254.1	67.5	65.8	69.1	66.3	228.10	30.10	6892.90
2006/11/17	14:09:00	1210.4	922.6	284.8	298.6	257.7	262.9	550.0	774.8	266.8	264.3	233.4	254.0	67.8	66.2	69.3	66.3	229.00	30.07	6892.04
2006/11/17	14:10:00	1210.5	920.1	285.1	297.9	256.7	262.7	551.7	698.1	265.8	263.9	233.2	253.9	67.3	66.2	68.4	65.5	228.70	30.05	6886.16
2006/11/17	14:11:00	1210.6	921.3	284.9	298.0	257.2	262.7	551.4	720.1	266.0	263.9	233.1	253.9	66.6	67.0	68.0	67.0	228.10	30.00	6843.00
2006/11/17	14:12:00	1211.9	919.3	284.9	297.9	256.9	262.7	552.9	658.7	266.6	264.3	233.3	253.9	67.2	67.1	68.8	67.0	229.50	30.20	6933.20
2006/11/17	14:13:00	1211.8	919.6	284.9	298.3	256.2	262.4	551.1	738.7	265.9	264.3	233.2	253.9	67.6	65.7	67.9	66.8	230.00	30.26	6959.80
2006/11/17	14:14:00	1211.2	922.1	285.1	298.2	257.5	263.0	551.7	676.5	266.1	263.8	233.4	254.0	67.9	65.7	69.3	66.6	230.20	30.27	6971.18
2006/11/17	14:15:00	1211.9	920.4	284.9	297.3	257.2	263.2	552.3	703.8	266.0	264.0	233.6	254.0	67.7	65.4	68.8	66.0	229.70	30.26	6953.02
2006/11/17	14:16:00	1211.9	920.6	284.9	297.8	257.2	262.9	551.9	664.6	266.7	264.3	233.0	253.9	67.2	66.1	69.0	66.8	229.80	30.27	6958.34
2006/11/17	14:17:00	1210.7	918.9	284.8	298.4	257.0	262.9	551.5	642.4	266.8	264.3	233.1	253.9	66.6	66.8	67.5	67.3	229.50	30.03	6915.91
2006/11/17	14:18:00	1210.8	919.1	284.9	298.9	257.7	263.0	552.4	681.4	266.5	264.5	233.1	253.9	66.6	66.3	67.5	67.5	229.50	30.19	6928.61
2006/11/17	14:19:00	1210.6	921.8	284.9	298.5	257.2	262.7	550.7	661.8	266.1	263.9	233.2	253.9	67.3	65.6	68.6	66.4	230.00	30.23	6952.90
2006/11/17	14:20:00	1211.3	921.0	285.1	297.1	257.2	262.9	551.9	698.4	266.5	263.8	233.5	254.0	67.7	67.0	67.8	67.3	230.20	30.28	6970.46
2006/11/17	14:21:00	1212.5	918.1	284.8	298.6	255.9	263.0	550.9	673.3	265.5	264.2	233.2	254.0	68.3	67.3	67.8	67.0	229.10	30.15	6907.37
2006/11/17	14:22:00	1211.2	920.4	284.9	298.6	256.4	262.9	552.9	651.0	266.1	263.7	233.3	254.0	67.9	65.7	68.6	66.3	228.40	30.07	6867.99
2006/11/17	14:23:00	1211.1	917.4	285.1	297.8	256.2	262.9	551.8	758.3	266.4	264.0	233.2	254.0	67.0	67.5	67.6	67.0	228.50	30.09	6875.57
2006/11/17	14:24:00	1211.3	919.9	284.9	297.4	257.0	262.7	550.3	705.8	266.7	264.0	233.2	254.0	66.8	68.2	67.6	67.8	229.80	30.26	6958.34
2006/11/17	14:25:00	1211.3	919.9	284.8	298.0	257.2	262.7	551.4	772.5	266.4	264.3	233.0	254.0	67.8	67.3	67.9	67.0	230.00	30.23	6958.95
2006/11/17	14:26:00	1210.9	921.3	284.9	297.4	256.7	263.0	552.0	763.4	266.3	264.0	233.2	254.0	67.2	67.0	69.0	67.3	228.50	30.15	6900.70
2006/11/17	14:27:00	1211.4	917.9	285.1	297.8	257.5	262.6	552.4	737.9	266.6	264.0	232.8	254.0	67.7	67.0	69.1	68.1	228.50	30.07	6871.00
2006/11/17	14:28:00	1211.4	918.7	284.9	297.4	257.7	262.9	552.4	742.3	266.6	264.3	233.2	254.0	67.2	67.3	69.7	66.8	229.10	30.08	6900.49
2006/11/17	14:29:00	1211.1	922.4	285.1	298.1	257.5	262.7	551.5	712.8	266.7	264.3	233.2	254.0	66.6	68.3	68.4	66.4	228.70	30.13	6890.73
2006/11/17	14:30:00	1211.7	922.4	284.9	296.7	256.9	262.7	552.0	676.6	266.6	264.2	233.3	254.0	67.2	67.3	68.4	66.8	229.00	30.12	6897.48
2006/11/17	14:31:00	1211.5	922.0	284.9	297.4	256.9	263.2	553.4	724.5	266.6	264.0	233.3	253.9	68.4	66.2	67.6	67.3	229.70	30.06	6925.82
2006/11/17	14:32:00	1211.0	921.0	285.1	298.5	256.9	262.9	552.4	653.1	266.1	263.9	233.2	253.9	68.0	66.2	68.3	67.5	229.50	30.18	6929.33
2006/11/17	14:33:00	1211.7	921.0	284.9	297.3	256.9	262.7	551.7	740.4	266.7	263.8	233.0	253.9	67.6	66.6	68.6	67.6	229.00	30.17	6908.93
2006/11/17	14:34:00	1212.1	920.2	284.6	298.2	257.2	262.7	551.4	754.8	266.9	264.2	233.1	253.9	66.8	67.2	67.8	67.9	228.60	30.09	6878.57
2006/11/17	14:35:00	1211.6	920.6	285.1	298.8	256.9	262.9	552.0	697.6	266.4	264.4	233.1	253.9	67.1	67.9	67.7	67.6	230.10	30.27	6967.43
2006/11/17	14:36:00	1211.5	922.4	284.9	297.5	257.2	263.0	552.4	712.1	266.4	264.2	233.2	254.0	68.2	67.2	68.1	67.2	229.20	30.18	6917.26
2006/11/17	14:37:00	1211.7	921.8	284.9	297.6	258.0	263.2	552.0	661.6	266.3	264.0	233.4	253.9	68.0	67.5	68.6	67.0	228.90	30.09	6887.60

Heat Rise Test
1st Run

Date	Time	TC1	TC2	TC3	TC4	TC5	TC6	TC7	TC8	TC9	TC10	TC11	TC12	TC13	TC14	TC15	TC16	VDC	Amps	Watts
2006/11/17	14:38:00	1210.7	919.7	284.8	297.8	257.4	262.4	552.9	628.9	266.7	264.3	233.4	253.9	68.6	67.0	68.3	67.2	230.10	30.28	6967.43
2006/11/17	14:39:00	1210.7	920.2	284.9	298.5	257.2	263.4	552.3	682.5	266.9	264.2	233.2	254.0	68.6	67.5	69.3	67.3	230.00	30.26	6959.80
2006/11/17	14:40:00	1211.9	922.9	284.9	298.1	257.7	263.2	552.6	657.4	266.9	264.4	233.4	254.0	68.6	68.2	69.1	67.3	229.80	30.22	6951.45
2006/11/17	14:41:00	1211.2	919.1	285.1	297.8	257.4	263.2	552.6	709.5	266.5	264.4	233.2	253.9	67.9	66.8	69.3	67.2	228.70	30.12	6888.44
2006/11/17	14:42:00	1212.5	918.8	285.1	297.6	257.4	263.4	551.3	692.2	266.6	264.0	233.3	254.0	68.4	66.8	69.1	66.4	229.30	30.20	6924.86
2006/11/17	14:43:00	1212.9	919.0	285.1	298.1	256.5	263.4	552.9	718.7	266.8	264.3	233.4	254.0	68.6	66.8	69.9	66.8	229.80	30.25	6951.45
2006/11/17	14:44:00	1211.9	920.9	285.2	298.5	257.4	263.0	551.7	763.2	266.8	264.4	233.4	254.0	68.1	66.6	69.6	67.1	229.60	30.22	6938.51
2006/11/17	14:45:00	1211.9	919.3	285.1	296.8	257.7	263.2	551.1	729.1	266.6	263.8	233.4	253.9	68.4	66.6	69.0	66.4	229.50	30.21	6933.20
2006/11/17	14:46:00	1211.1	921.3	285.2	297.3	257.8	262.9	553.2	705.2	266.7	264.2	233.6	253.9	68.6	66.6	68.8	66.8	229.60	30.21	6936.22
2006/11/17	14:47:00	1211.1	921.5	285.2	297.2	258.0	263.0	552.0	668.8	266.1	264.0	233.4	253.9	68.4	66.8	69.1	67.3	229.50	30.19	6928.61
2006/11/17	14:48:00	1211.0	920.6	285.1	298.4	257.0	263.0	552.4	700.5	266.1	263.9	233.4	253.9	67.9	67.2	69.3	67.3	229.90	30.23	6949.88
2006/11/17	14:49:00	1211.5	919.4	284.9	297.9	257.0	262.9	552.9	719.2	266.1	263.9	233.3	253.9	67.9	67.1	69.0	67.2	228.60	30.07	6874.00
2006/11/17	14:50:00	1211.6	921.7	284.9	297.4	257.8	262.7	552.9	705.9	266.2	263.9	233.3	253.8	67.3	67.1	68.0	67.2	229.40	30.22	6932.47
2006/11/17	14:51:00	1211.9	921.8	285.2	297.0	257.7	263.2	552.4	688.9	266.4	263.8	233.4	254.0	68.3	67.3	69.1	67.1	229.70	30.24	6946.13
2006/11/17	14:52:00	1211.9	918.7	285.2	298.0	257.2	263.2	552.0	725.3	266.5	263.9	233.3	254.0	68.4	67.3	68.8	67.3	230.10	30.27	6965.13
2006/11/17	14:53:00	1211.9	919.6	285.1	298.1	257.2	263.2	551.8	720.3	266.5	263.8	233.2	254.0	67.1	66.4	69.1	67.8	229.80	30.23	6958.34
2006/11/17	14:54:00	1211.7	923.2	285.2	297.4	258.0	262.7	552.2	720.3	266.7	264.2	233.5	254.0	68.0	66.4	69.0	67.1	229.80	30.23	6946.85
2006/11/17	14:55:00	1211.4	921.1	285.1	297.1	257.2	262.9	552.2	729.4	266.1	263.9	233.4	253.9	68.0	67.0	68.0	67.2	229.90	30.23	6949.88
2006/11/17	14:56:00	1211.0	921.3	285.1	298.0	256.5	263.4	552.1	676.5	266.5	263.9	233.4	253.9	68.0	67.2	69.1	67.0	230.10	30.25	6963.55
2006/11/17	14:57:00	1211.0	921.4	285.1	297.6	257.4	262.9	552.4	675.4	267.0	264.2	233.2	253.9	67.3	67.0	68.3	67.7	229.50	30.23	6937.79
2006/11/17	14:58:00	1211.1	921.0	285.2	298.4	257.4	262.9	551.8	657.6	266.9	264.4	233.2	253.9	67.5	67.8	68.6	67.8	230.00	30.28	6966.70
2006/11/17	14:59:00	1210.9	920.9	285.1	298.9	257.9	262.7	551.6	643.5	266.3	264.4	232.9	253.9	67.7	66.8	67.8	67.0	230.10	30.25	6962.83
2006/11/17	15:00:00	1210.4	917.8	285.1	298.1	256.7	262.7	551.9	678.1	266.5	264.4	232.9	253.9	67.3	68.0	67.9	67.2	229.20	30.16	6912.67
2006/11/17	15:01:00	1211.9	920.7	285.1	298.0	257.0	263.2	552.0	679.3	266.3	264.2	233.1	253.8	68.4	67.8	68.8	67.6	230.10	30.27	6967.43
2006/11/17	15:02:00	1212.4	916.9	284.9	297.4	256.7	263.0	552.7	606.1	266.2	263.9	233.3	253.8	68.0	68.0	68.0	66.6	229.40	30.19	6925.59
2006/11/17	15:03:00	1211.9	918.9	285.1	298.5	257.4	263.2	552.9	686.5	267.0	264.2	233.1	253.9	68.0	67.2	68.4	68.0	229.50	30.23	6942.38
2006/11/17	15:04:00	1211.9	919.1	285.2	298.1	256.7	263.2	552.4	675.3	266.1	264.0	233.1	253.9	67.9	67.2	68.8	66.8	229.60	30.21	6940.81
2006/11/17	15:05:00	1211.6	921.1	285.2	297.3	257.2	262.4	551.4	625.4	266.2	264.2	233.3	253.9	68.1	67.5	69.1	67.1	230.00	30.26	6962.83
2006/11/17	15:06:00	1211.8	917.4	285.2	297.3	257.4	263.2	552.4	658.6	266.9	264.5	233.2	254.0	68.2	67.8	68.4	67.8	228.90	30.14	6899.05
2006/11/17	15:07:00	1212.1	920.4	285.2	296.8	257.4	263.2	552.2	668.2	266.7	264.6	233.2	254.0	68.6	67.2	69.0	68.4	230.10	30.23	6963.55
2006/11/17	15:08:00	1210.9	920.0	285.1	297.5	257.2	262.9	552.0	630.5	267.4	264.6	233.2	254.0	67.3	67.7	68.4	68.0	229.40	30.20	6927.88
2006/11/17	15:09:00	1211.1	918.3	285.2	297.9	257.8	262.7	551.1	596.9	266.6	264.2	233.3	254.0	67.3	66.8	68.6	67.7	229.00	30.20	6915.80
2006/11/17	15:10:00	1211.6	918.2	285.1	297.7	257.8	262.9	551.5	630.7	267.1	264.2	233.2	254.0	68.3	67.6	68.3	67.9	229.20	30.17	6914.96
2006/11/17	15:11:00	1211.7	920.4	285.2	298.5	257.4	263.2	552.2	657.3	266.8	264.2	233.3	253.9	68.4	67.5	68.6	67.7	230.00	30.27	6962.10
2006/11/17	15:12:00	1211.1	918.6	284.9	298.2	256.9	263.2	550.7	626.1	266.3	264.2	233.4	253.9	67.6	66.8	68.6	67.3	229.80	30.15	6937.52
2006/11/17	15:13:00	1211.3	920.2	285.1	298.3	256.9	263.0	551.9	649.5	266.7	264.2	233.3	253.9	67.2	67.5	67.8	68.3	229.90	30.25	6954.47
2006/11/17	15:14:00	1211.3	918.6	285.1	298.2	256.5	263.4	552.9	679.6	266.0	264.2	233.1	254.0	68.8	68.3	69.1	68.1	229.70	30.23	6943.83
2006/11/17	15:15:00	1210.9	918.4	285.2	298.6	257.4	263.2	553.1	672.2	266.7	264.4	233.4	254.0	68.4	68.3	68.2	67.9	228.90	30.16	6903.62
2006/11/17	15:16:00	1211.0	919.7	285.4	297.9	256.2	262.9	551.3	663.2	267.4	264.6	233.3	254.1	68.4	69.0	68.2	69.0	229.80	30.25	6951.45
2006/11/17	15:17:00	1210.5	921.7	285.4	298.5	256.2	263.0	552.1	638.6	266.4	264.6	233.3	254.0	69.1	68.6	69.0	68.4	229.70	30.25	6953.02
2006/11/17	15:18:00	1210.5	920.4	285.4	296.9	258.0	263.4	551.7	664.5	266.7	264.5	233.3	254.1	68.6	67.7	68.8	67.3	229.90	30.26	6961.37
2006/11/17	15:19:00	1211.3	919.7	285.4	298.5	257.4	263.4	553.2	634.9	267.2	264.8	233.4	254.1	67.1	68.2	69.3	68.8	229.70	30.22	6941.53
2006/11/17	15:20:00	1211.9	920.5	285.6	298.1	257.7	262.9	551.1	633.9	267.0	264.8	233.2	254.1	67.5	68.8	68.4	68.1	230.00	30.26	6959.80
2006/11/17	15:21:00	1212.2	919.4	285.4	298.4	258.0	263.0	550.3	667.2	267.4	265.1	233.4	254.1	68.1	68.8	69.1	68.8	229.80	30.25	6951.45
2006/11/17	15:22:00	1211.1	920.9	285.2	298.5	257.5	263.2	553.2	703.3	267.1	265.1	233.3	254.2	67.5	67.7	68.3	68.0	229.30	30.17	6917.98
2006/11/17	15:23:00	1211.4	917.5	285.4	298.6	257.0	263.0	551.8	642.3	267.3	264.9	233.4	254.2	67.7	67.1	68.3	67.5	229.80	30.26	6953.75
2006/11/17	15:24:00	1211.4	918.5	285.4	298.3	257.2	263.4	550.2	673.3	267.6	264.9	233.5	254.2	67.6	67.8	69.1	67.7	229.50	30.24	6942.38
2006/11/17	15:25:00	1211.0	918.7	285.4	298.0	257.4	263.2	552.6	624.9	266.9	264.9	233.5	254.2	67.6	67.8	68.4	67.3	229.90	30.23	6949.88
2006/11/17	15:26:00	1211.2	919.1	285.4	297.4	256.9	263.0	552.4	628.6	266.9	264.9	233.4	254.2	68.2	66.4	67.9	67.3	229.40	30.22	6937.06
2006/11/17	15:27:00	1211.1	921.7	285.4	298.6	257.0	263.2	552.6	651.6	266.9	265.2	233.4	254.1	67.9	68.3	69.1	68.3	228.80	30.12	6891.46
2006/11/17	15:28:00	1211.4	918.3	285.1	298.9	256.9	263.2	552.4	570.4	266.5	264.8	233.5	254.1	68.6	67.5	69.0	67.2	229.90	30.25	6954.47
2006/11/17	15:29:00	1212.5	917.4	285.4	297.3	258.2	263.7	552.9	656.9	267.0	264.4	233.4	254.1	68.0	67.7	68.8	67.6	228.80	30.13	6893.74
2006/11/17	15:30:00	1211.9	917.4	285.4	297.8	257.4	263.0	552.6	678.3	267.3	264.9	233.3	254.1	67.6	68.0	68.2	67.8	229.60	30.19	6931.62
2006/11/17	15:31:00	1211.4	919.6	285.6	298.1	257.5	263.2	551.4	639.4	267.0	265.0	233.5	254.2	68.0	68.0	68.0	67.9	227.80	29.98	6834.00
2006/11/17	15:32:00	1211.7	918.2	285.4	298.6	257.4	263.2	551.8	616.4	267.8	265.0	233.4	254.2	67.3	68.3	68.8	68.0	229.90	30.26	6956.77
2006/11/17	15:33:00	1211.0	920.6	285.6	297.7	256.4	263.7	551.6	683.3	267.3	265.1	233.2	254.2	69.0	68.8	70.1	68.3	229.60	30.20	6939.24

Heat Rise Test
1st Run

Date	Time	TC1	TC2	TC3	TC4	TC5	TC6	TC7	TC8	TC9	TC10	TC11	TC12	TC13	TC14	TC15	TC16	VDC	Amps	Watts
2006/11/17	15:34:00	1210.8	920.8	285.4	298.6	257.4	263.2	551.7	689.7	267.4	265.2	233.5	254.3	68.4	68.1	69.1	68.2	229.40	30.21	6930.17
2006/11/17	15:35:00	1211.1	918.4	285.6	297.5	258.5	263.0	552.2	690.2	267.0	265.3	233.5	254.2	68.8	68.2	69.9	69.0	229.60	30.24	6943.10
2006/11/17	15:36:00	1210.6	922.6	285.4	298.0	257.9	263.2	553.4	682.0	267.3	264.9	233.5	254.2	68.3	69.0	69.7	68.1	229.60	30.21	6943.10
2006/11/17	15:37:00	1211.1	920.5	285.6	298.1	257.4	263.2	552.6	616.8	266.8	265.0	233.7	254.3	68.2	68.2	68.4	67.8	229.80	30.24	6949.15
2006/11/17	15:38:00	1210.8	922.7	285.4	298.4	258.5	262.6	551.8	632.2	266.9	265.2	234.0	254.3	69.1	67.0	69.5	67.8	230.10	30.27	6965.13
2006/11/17	15:39:00	1211.1	921.6	285.7	298.6	257.2	263.5	550.7	668.6	267.4	265.4	233.6	254.3	69.1	67.3	68.6	67.8	230.20	30.27	6968.15
2006/11/17	15:40:00	1212.4	919.4	285.7	296.7	257.0	263.2	553.2	698.6	267.1	265.3	233.5	254.3	68.8	68.8	69.1	68.0	229.70	30.23	6950.72
2006/11/17	15:41:00	1210.6	919.1	285.6	296.7	258.3	263.7	552.8	662.1	267.4	265.3	233.8	254.2	68.2	68.1	69.3	68.1	230.10	30.23	6955.92
2006/11/17	15:42:00	1210.7	920.6	285.4	298.0	258.7	263.4	552.8	596.6	267.4	265.4	233.5	254.2	68.3	67.6	69.7	68.3	230.20	30.27	6970.46
2006/11/17	15:43:00	1211.4	920.1	285.7	297.7	257.2	263.2	551.9	721.5	267.0	265.2	233.9	254.2	68.1	67.0	69.3	67.5	230.10	30.26	6965.85
2006/11/17	15:44:00	1211.8	920.4	285.4	298.1	257.0	263.2	551.9	700.6	267.9	265.2	233.7	254.2	68.2	67.5	68.2	68.3	229.60	30.21	6936.22
2006/11/17	15:45:00	1211.7	918.7	285.6	297.6	256.9	263.2	552.6	674.6	267.3	264.9	233.7	254.2	67.5	68.3	69.8	68.3	230.00	30.27	6962.10
2006/11/17	15:46:00	1211.9	918.9	285.7	298.3	256.7	263.4	552.6	624.4	266.6	265.1	233.6	254.2	67.2	66.8	68.4	67.9	229.40	30.21	6930.17
2006/11/17	15:47:00	1211.2	921.1	285.7	298.4	256.1	263.2	552.3	622.6	267.4	265.5	233.7	254.2	67.8	67.5	68.4	67.7	229.40	30.21	6930.17
2006/11/17	15:48:00	1211.0	916.9	285.6	298.0	257.7	263.4	551.7	584.4	267.4	264.9	233.5	254.2	67.7	67.7	68.8	67.6	229.80	30.21	6948.30
2006/11/17	15:49:00	1212.1	918.2	285.6	297.7	257.2	262.9	551.7	579.3	267.6	265.3	233.4	254.2	69.0	67.9	69.1	67.7	230.10	30.23	6958.95
2006/11/17	15:50:00	1211.9	920.6	285.6	298.3	256.7	263.4	552.6	628.5	267.3	265.1	233.6	254.2	68.8	67.8	68.3	67.6	230.10	30.14	6953.30
2006/11/17	15:51:00	1211.4	922.9	285.6	298.6	257.4	263.2	552.8	593.1	267.3	265.3	233.8	254.2	68.6	68.2	69.1	68.1	230.00	30.26	6959.80
2006/11/17	15:52:00	1211.0	920.4	284.9	297.9	257.0	263.2	552.4	657.8	267.0	264.8	233.8	254.2	68.8	68.1	68.4	67.1	229.80	30.23	6955.92
2006/11/17	15:53:00	1211.1	919.6	285.6	297.2	257.9	263.2	553.4	634.1	267.4	265.0	233.7	254.2	67.6	68.3	69.3	67.7	229.90	30.25	6956.77
2006/11/17	15:54:00	1210.1	920.9	285.4	298.0	257.2	263.2	552.1	630.5	267.3	265.4	233.6	254.2	67.0	67.3	68.6	68.8	229.20	30.17	6914.96
2006/11/17	15:55:00	1210.0	920.2	285.6	298.8	258.0	263.4	553.1	668.8	267.3	264.8	233.5	254.2	68.3	67.8	69.5	68.6	230.20	30.27	6970.46
2006/11/17	15:56:00	1211.2	918.5	285.4	298.2	256.5	263.2	552.4	676.4	267.4	265.1	233.7	254.1	68.1	66.4	69.1	67.6	229.40	30.21	6930.17
2006/11/17	15:57:00	1211.8	915.9	285.4	297.9	257.2	263.2	553.2	678.1	267.4	265.2	233.5	254.1	67.6	67.7	69.0	67.8	230.20	30.28	6970.46
2006/11/17	15:58:00	1212.5	918.8	285.4	297.1	258.0	262.9	552.2	643.6	267.4	265.1	233.7	254.1	68.3	67.5	68.8	67.7	230.00	30.27	6962.10
2006/11/17	15:59:00	1211.2	919.3	285.4	297.7	257.8	263.4	552.6	620.1	267.0	264.5	233.8	254.1	68.8	67.9	68.3	68.0	230.10	30.27	6967.43
2006/11/17	16:00:00	1210.7	920.4	285.2	297.8	257.4	263.2	552.1	624.6	267.3	264.8	233.7	254.1	69.3	68.1	68.6	68.8	229.70	30.27	6955.32
2006/11/17	16:01:00	1210.2	917.8	285.4	298.1	257.4	263.4	552.9	604.9	267.3	265.3	233.6	254.2	69.1	67.7	69.9	67.7	229.40	30.16	6927.88
2006/11/17	16:02:00	1210.1	920.5	285.2	298.5	258.2	263.2	553.2	613.7	266.9	265.4	233.7	254.2	67.8	67.7	69.5	68.0	229.50	30.21	6933.20
2006/11/17	16:03:00	1210.5	922.4	285.6	298.4	257.4	263.5	552.8	639.9	267.8	265.6	233.9	254.2	67.9	67.3	69.7	68.8	230.20	30.24	6961.25
2006/11/17	16:04:00	1210.4	919.9	285.6	298.2	258.5	263.5	552.0	641.4	267.9	265.4	233.7	254.2	68.6	68.1	70.6	68.6	230.10	30.24	6961.25
2006/11/17	16:05:00	1210.1	917.9	285.6	298.3	258.0	263.4	551.2	592.7	267.4	265.3	233.7	254.2	68.8	68.6	69.9	68.2	230.20	30.28	6970.46
2006/11/17	16:06:00	1209.9	919.6	285.6	297.9	258.0	263.4	552.9	627.4	267.7	265.6	233.5	254.3	68.3	68.2	69.7	69.3	229.50	30.25	6953.85
2006/11/17	16:07:00	1211.2	916.9	285.7	298.0	257.4	263.0	552.4	614.5	266.9	265.5	233.7	254.3	67.0	68.8	69.1	68.3	229.90	30.23	6949.88
2006/11/17	16:08:00	1211.7	921.2	285.4	298.1	257.2	263.4	552.1	612.3	267.7	265.4	233.8	254.3	67.9	68.8	68.8	67.9	230.20	30.28	6970.46
2006/11/17	16:09:00	1210.8	921.3	285.6	299.0	257.7	263.5	553.1	667.9	267.4	265.5	233.8	254.3	68.2	68.3	69.1	67.8	230.00	30.27	6962.10
2006/11/17	16:10:00	1210.6	916.7	285.6	299.0	257.4	263.2	552.4	630.1	267.6	265.4	233.8	254.3	68.0	68.4	69.5	67.9	230.10	30.27	6965.13
2006/11/17	16:11:00	1210.6	918.1	285.6	297.3	257.7	263.4	552.6	623.3	267.3	265.2	233.8	254.2	67.1	67.9	69.6	67.6	229.80	30.25	6951.45
2006/11/17	16:12:00	1211.7	919.7	285.4	297.6	258.2	263.2	552.2	591.8	267.0	265.1	234.0	254.1	68.0	67.2	68.6	67.1	230.00	30.28	6964.40
2006/11/17	16:13:00	1211.5	920.4	285.6	298.1	258.4	263.4	552.4	636.6	267.4	265.3	233.9	254.1	67.7	67.2	69.1	67.3	230.00	30.27	6962.10
2006/11/17	16:14:00	1211.2	918.3	285.4	297.8	258.2	263.2	553.4	603.8	267.1	265.1	233.9	254.1	67.8	67.5	69.5	67.3	230.20	30.26	6968.88
2006/11/17	16:15:00	1211.7	918.4	285.2	297.8	257.8	263.4	551.6	598.8	267.1	265.0	233.9	254.0	68.3	67.2	68.3	67.3	230.20	30.28	6970.46
2006/11/17	16:16:00	1210.9	920.9	285.2	298.2	257.8	263.4	553.9	599.9	267.3	265.0	233.8	254.0	68.3	67.7	69.5	68.3	230.10	30.26	6962.83
2006/11/17	16:17:00	1210.6	915.9	285.4	297.5	257.8	263.4	552.7	671.2	267.3	265.0	233.5	254.0	68.6	68.6	69.5	68.6	230.20	30.28	6970.46
2006/11/17	16:18:00	1211.1	917.5	285.4	297.9	258.0	263.4	551.9	620.4	267.6	265.7	233.6	254.1	68.1	66.8	69.3	68.1	229.50	30.23	6937.79
2006/11/17	16:19:00	1210.5	921.8	285.4	298.1	257.4	262.9	552.2	641.8	267.2	265.1	233.6	254.1	67.2	66.2	69.1	68.0	230.20	30.28	6970.46
2006/11/17	16:20:00	1210.2	919.4	285.4	297.8	258.2	263.2	551.0	710.3	267.3	265.0	233.5	254.0	67.5	67.1	68.3	67.6	230.10	30.27	6965.13
2006/11/17	16:21:00	1210.8	919.3	285.4	297.6	258.2	262.9	552.2	663.7	266.9	265.2	233.4	254.0	67.5	67.7	68.8	67.8	230.20	30.28	6970.46
2006/11/17	16:22:00	1209.7	920.2	285.6	299.3	257.7	263.2	552.3	692.3	266.8	264.8	233.7	254.1	68.1	68.6	69.3	66.6	230.10	30.28	6967.43
2006/11/17	16:23:00	1210.4	920.0	285.4	297.7	258.0	263.2	551.9	658.8	266.9	264.8	233.9	254.0	68.4	67.3	69.5	66.6	230.20	30.28	6970.46
2006/11/17	16:24:00	1210.6	919.9	285.4	297.9	257.7	263.2	551.2	670.4	266.5	264.3	233.5	254.1	67.3	67.7	69.1	67.0	229.00	30.14	6902.06
2006/11/17	16:25:00	1211.7	919.1	285.4	297.4	256.7	262.9	550.7	637.9	267.3	264.9	233.2	254.1	67.2	68.4	69.1	68.6	230.00	30.26	6959.80
2006/11/17	16:26:00	1211.9	918.6	285.4	297.8	257.0	263.2	551.5	655.3	267.3	264.6	233.5	254.1	68.4	68.8	68.8	68.0	230.10	30.22	6956.64
2006/11/17	16:27:00	1211.1	917.9	285.4	297.6	257.7	263.4	550.3	654.6	267.0	264.7	233.5	254.1	68.6	68.6	69.1	68.3	229.70	30.21	6943.83
2006/11/17	16:28:00	1210.5	919.4	285.4	298.2	258.2	262.9	551.1	641.1	267.4	265.2	233.6	254.1	67.7	67.8	69.1	68.1	229.50	30.22	6937.79
2006/11/17	16:29:00	1210.4	914.4	285.2	298.1	256.9	262.7	552.0	645.0	267.2	264.5	233.4	254.1	67.6	67.2	68.3	67.7	230.20	30.28	6970.46

Heat Rise Test
1st Run

Date	Time	TC1	TC2	TC3	TC4	TC5	TC6	TC7	TC8	TC9	TC10	TC11	TC12	TC13	TC14	TC15	TC16	VDC	Amps	Watts
2006/11/17	16:30:00	1212.4	916.0	285.4	297.2	257.9	263.4	551.2	606.4	267.2	264.8	233.6	254.1	67.8	67.6	69.1	68.0	230.00	30.22	6950.60
2006/11/17	16:31:00	1211.6	918.1	285.2	297.4	257.9	263.2	551.4	579.7	267.4	264.8	233.4	254.1	68.2	68.1	69.0	67.8	229.70	30.20	6936.94
2006/11/17	16:32:00	1212.0	919.4	285.4	297.8	258.0	263.2	551.7	544.4	267.0	265.3	233.6	254.1	68.3	67.6	68.8	67.5	230.00	30.26	6959.80
2006/11/17	16:33:00	1211.3	920.0	285.4	298.0	257.4	263.2	551.3	561.5	267.3	265.3	233.6	254.1	67.2	66.8	68.8	67.5	230.10	30.25	6960.53
2006/11/17	16:34:00	1211.2	921.4	285.4	298.2	256.9	263.2	552.6	633.3	267.7	265.0	233.4	254.1	67.3	67.2	69.1	67.6	230.20	30.27	6970.46
2006/11/17	16:35:00	1210.1	919.1	285.2	297.6	257.9	262.9	551.8	590.6	266.7	265.4	233.4	254.1	67.3	68.4	68.8	67.7	230.20	30.28	6970.46
2006/11/17	16:36:00	1210.4	920.5	285.4	298.6	257.7	262.9	551.8	592.4	267.3	265.3	233.5	254.1	67.2	68.0	69.3	67.7	230.20	30.25	6970.46
2006/11/17	16:37:00	1211.7	917.1	285.4	297.9	257.7	263.0	551.8	591.1	267.2	265.7	233.4	254.1	67.6	68.2	69.1	68.2	230.10	30.27	6969.73
2006/11/17	16:38:00	1209.8	917.6	285.2	297.9	257.4	263.4	549.1	625.3	266.8	265.2	233.8	254.2	68.6	67.9	69.8	67.3	230.00	30.28	6964.40
2006/11/17	16:39:00	1209.9	917.7	285.6	297.6	257.8	263.2	551.6	666.2	267.4	265.2	233.7	254.1	69.0	67.7	69.7	68.1	230.00	30.26	6962.10
2006/11/17	16:40:00	1210.6	918.5	285.6	298.1	258.2	263.2	551.1	650.3	267.3	265.1	233.6	254.1	68.6	67.7	69.6	68.1	229.80	30.24	6949.15
2006/11/17	16:41:00	1210.5	920.8	285.6	298.3	258.2	263.2	551.8	612.6	267.3	265.1	233.6	254.1	67.8	68.2	68.6	68.1	229.20	30.09	6896.63
2006/11/17	16:42:00	1210.2	920.5	285.7	298.2	257.4	262.9	551.9	621.6	266.9	265.5	233.5	254.1	67.1	67.8	68.8	68.6	229.30	30.25	6943.20
2006/11/17	16:43:00	1211.9	919.6	285.6	297.7	257.4	263.4	551.1	601.4	266.9	265.4	233.6	254.1	68.0	67.7	69.3	68.3	229.60	30.20	6938.51
2006/11/17	16:44:00	1210.4	918.9	285.4	298.3	257.5	263.2	552.4	546.3	267.3	265.1	233.6	254.2	67.7	68.1	68.4	67.5	229.20	30.19	6919.55
2006/11/17	16:45:00	1210.8	917.9	285.6	297.6	257.4	263.2	551.6	525.9	266.6	264.9	233.7	254.2	68.6	67.2	69.1	67.8	229.60	30.22	6940.81
2006/11/17	16:46:00	1210.1	920.0	285.6	297.9	256.5	263.4	551.4	528.8	267.3	264.9	233.8	254.2	67.3	67.8	69.6	67.7	229.40	30.20	6939.35
2006/11/17	16:47:00	1210.4	921.1	285.4	298.6	256.4	262.9	550.2	555.4	267.3	265.2	233.6	254.2	67.1	68.2	69.1	68.6	228.60	30.12	6885.43
2006/11/17	16:48:00	1210.4	917.2	285.4	298.6	257.4	263.4	550.2	536.3	267.4	265.1	233.7	254.2	68.1	67.9	69.6	67.7	228.90	30.18	6917.36
2006/11/17	16:49:00	1209.8	917.2	285.7	297.9	257.4	263.4	551.9	615.3	266.5	264.9	233.6	254.3	68.4	67.8	69.1	67.7	229.60	30.17	6927.03
2006/11/17	16:50:00	1209.7	918.1	285.6	297.9	257.0	263.2	550.2	600.3	267.2	265.7	233.7	254.3	67.9	68.6	69.7	68.6	229.20	30.19	6919.55
2006/11/17	16:51:00	1209.6	919.4	285.4	298.6	256.9	263.2	550.5	622.7	267.3	265.8	233.5	254.3	67.3	69.0	69.6	67.5	229.10	30.20	6934.86
2006/11/17	16:52:00	1210.1	919.3	285.4	298.8	257.5	263.4	551.6	589.8	267.4	265.2	233.6	254.2	67.2	68.1	68.8	67.5	230.20	30.28	6970.46
2006/11/17	16:53:00	1210.0	917.8	285.4	298.1	257.2	262.9	552.3	627.8	267.2	265.5	233.7	254.3	68.1	67.1	68.6	68.2	229.80	30.25	6951.45
2006/11/17	16:54:00	1210.8	917.1	285.6	297.5	257.7	262.9	551.9	615.5	267.7	265.6	233.6	254.3	67.6	66.3	69.1	67.3	229.20	30.19	6924.86
2006/11/17	16:55:00	1209.4	920.7	285.4	297.9	257.4	262.9	551.9	678.5	267.4	265.6	233.7	254.3	67.9	67.7	69.1	67.8	229.20	30.19	6919.55
2006/11/17	16:56:00	1209.4	919.6	285.7	298.9	257.7	262.9	552.9	607.3	267.4	265.1	233.7	254.2	67.8	67.7	69.1	67.6	229.30	30.20	6924.86
2006/11/17	16:57:00	1210.4	918.6	285.4	297.9	256.7	263.2	552.0	633.4	267.9	265.2	233.5	254.2	67.2	67.3	69.3	68.0	229.70	30.22	6944.56
2006/11/17	16:58:00	1211.8	918.8	285.7	298.6	257.8	263.4	552.8	606.1	267.2	264.9	233.8	254.3	68.8	66.8	69.9	67.7	229.60	30.22	6947.70
2006/11/17	16:59:00	1210.7	920.0	285.6	299.0	258.0	263.4	553.9	643.7	266.8	265.1	233.9	254.3	68.6	67.2	69.1	67.6	229.60	30.21	6939.24
2006/11/17	17:00:00	1210.0	919.4	285.4	298.4	256.4	262.4	551.1	595.6	267.8	265.4	233.6	254.2	67.6	67.6	68.8	67.6	229.70	30.19	6948.43
2006/11/17	17:01:00	1210.6	919.6	285.4	297.7	257.2	263.0	551.6	571.4	267.1	265.5	233.6	254.2	68.8	66.8	68.1	67.3	229.90	30.25	6954.47
2006/11/17	17:02:00	1209.6	920.5	285.4	297.9	257.7	263.0	551.4	551.5	266.7	265.4	233.6	254.2	68.4	67.3	68.0	67.7	229.50	30.19	6928.61
2006/11/17	17:03:00	1210.0	921.5	285.4	297.8	257.7	263.2	551.4	513.5	267.1	265.2	233.5	254.2	68.2	67.3	69.3	67.6	229.60	30.21	6938.51
2006/11/17	17:04:00	1210.0	917.9	285.4	297.7	257.9	262.7	551.7	493.2	267.2	265.0	233.5	254.2	67.6	67.1	68.3	67.2	229.70	30.17	6930.05
2006/11/17	17:05:00	1210.0	919.4	285.7	298.3	257.2	263.2	551.3	571.6	267.2	265.2	233.6	254.2	67.9	66.2	68.4	66.8	229.50	30.21	6933.20
2006/11/17	17:06:00	1209.1	919.1	285.6	298.1	257.2	262.9	551.6	596.7	267.2	265.3	233.7	254.2	67.7	67.7	68.6	66.8	230.10	30.26	6962.83
2006/11/17	17:07:00	1209.8	918.8	285.7	298.6	257.4	263.4	550.3	576.4	267.2	265.2	233.6	254.2	67.8	67.3	68.6	67.9	230.00	30.26	6959.80
2006/11/17	17:08:00	1210.8	918.9	285.2	297.5	257.2	263.2	550.7	617.9	267.4	265.4	233.6	254.2	67.1	67.1	67.9	67.6	229.70	30.14	6923.16
2006/11/17	17:09:00	1210.4	918.5	285.9	299.0	257.9	263.4	551.6	586.7	267.9	266.1	233.6	254.3	67.0	68.1	68.8	68.8	229.80	30.27	6956.05
2006/11/17	17:10:00	1210.5	918.1	285.7	299.0	257.4	263.4	550.4	538.4	267.9	266.2	233.6	254.4	66.6	68.1	68.6	67.8	229.20	30.25	6942.47
2006/11/17	17:11:00	1210.2	920.1	285.7	299.1	257.4	263.2	551.3	628.0	267.3	265.5	233.8	254.4	67.2	66.8	68.6	67.2	230.20	30.28	6970.46
2006/11/17	17:12:00	1210.9	920.0	285.7	298.2	257.5	263.0	550.9	510.1	267.0	265.6	233.8	254.5	67.5	67.1	68.6	66.6	229.50	30.22	6944.67
2006/11/17	17:13:00	1210.8	916.4	285.7	297.8	258.4	263.5	552.4	570.5	267.2	265.2	233.9	254.4	67.6	67.3	69.1	67.3	229.60	30.20	6933.92
2006/11/17	17:14:00	1210.9	920.5	285.7	298.0	257.4	263.2	551.4	605.6	267.4	265.6	233.8	254.4	68.0	67.5	68.3	67.6	229.10	30.18	6914:24
2006/11/17	17:15:00	1210.5	917.8	285.7	298.1	257.0	263.7	552.2	514.2	267.1	265.3	233.6	254.4	66.8	67.7	69.1	67.7	230.10	30.28	6969.73
2006/11/17	17:16:00	1211.3	920.2	285.7	298.3	258.3	263.4	552.0	569.5	266.6	265.5	233.8	254.4	67.5	67.3	68.8	67.3	229.80	30.28	6958.34
2006/11/17	17:17:00	1210.5	919.3	285.7	297.6	258.3	263.2	552.8	605.1	267.4	264.9	234.0	254.3	67.2	66.8	69.1	67.2	230.10	30.25	6965.13
2006/11/17	17:18:00	1210.4	921.3	285.7	298.5	257.2	263.4	551.4	542.2	267.4	265.0	234.1	254.3	67.6	67.0	67.8	67.0	230.10	30.27	6967.43
2006/11/17	17:19:00	1209.8	917.6	285.6	297.7	258.0	263.2	550.8	572.7	267.8	265.0	233.4	254.3	66.8	67.2	67.8	67.0	229.90	30.25	6954.47
2006/11/17	17:20:00	1211.0	916.3	285.6	297.6	257.7	263.2	550.9	624.3	267.7	265.4	233.7	254.3	67.0	67.2	67.3	67.0	229.90	30.24	6952.18
2006/11/17	17:21:00	1210.1	922.4	285.6	298.8	256.7	263.0	550.8	596.1	267.2	265.5	233.7	254.3	67.3	67.8	68.1	67.0	230.00	30.25	6963.55
2006/11/17	17:22:00	1210.7	920.2	285.7	298.3	257.5	263.0	552.4	603.3	266.4	265.1	233.9	254.3	67.0	67.0	68.2	67.1	230.20	30.26	6965.85
2006/11/17	17:23:00	1209.4	917.1	285.7	298.3	257.9	263.5	551.3	605.1	267.2	265.0	233.8	254.3	67.0	67.0	68.8	67.0	230.10	30.26	6967.43
2006/11/17	17:24:00	1209.6	917.6	285.7	298.6	256.7	263.0	550.7	630.4	267.7	264.9	233.6	254.4	65.7	67.1	67.9	66.6	230.10	30.26	6962.83
2006/11/17	17:25:00	1210.1	922.1	285.7	297.6	257.2	262.9	552.0	651.8	267.8	265.6	233.6	254.3	65.6	68.0	67.3	67.3	230.20	30.27	6968.15

Heat Rise Test
1st Run

Date	Time	TC1	TC2	TC3	TC4	TC5	TC6	TC7	TC8	TC9	TC10	TC11	TC12	TC13	TC14	TC15	TC16	VDC	Amps	Watts
2006/11/17	17:26:00	1209.1	918.4	285.9	299.0	256.9	263.0	552.4	504.8	267.4	265.4	233.8	254.4	67.3	65.2	68.6	66.0	230.20	30.27	6968.15
2006/11/17	17:27:00	1209.1	918.3	285.4	298.3	256.5	263.0	550.7	486.2	265.9	264.7	233.8	254.4	66.4	65.7	67.5	65.1	230.20	30.27	6972.76
2006/11/17	17:28:00	1209.6	918.3	285.4	298.0	257.0	263.0	552.4	550.0	267.8	265.2	233.7	254.3	66.6	67.0	67.8	66.8	230.10	30.28	6967.43
2006/11/17	17:29:00	1209.7	920.5	285.7	298.6	257.8	263.2	552.4	597.0	267.4	265.3	233.5	254.4	67.8	67.0	68.4	67.1	229.90	30.26	6956.77
2006/11/17	17:30:00	1211.2	918.8	285.6	297.2	257.8	263.4	550.3	613.4	267.8	265.6	233.6	254.4	66.3	66.6	68.6	66.6	229.70	30.24	6946.13
2006/11/17	17:31:00	1210.7	918.9	285.7	298.4	257.2	263.4	552.1	615.4	267.2	265.3	233.7	254.4	66.8	65.9	68.6	65.9	229.70	30.21	6939.24
2006/11/17	17:32:00	1210.1	916.6	285.6	298.4	258.0	262.9	552.6	552.3	267.4	265.6	233.7	254.5	67.2	66.0	67.2	66.0	230.20	30.28	6970.46
2006/11/17	17:33:00	1210.4	916.4	285.7	298.1	257.4	263.4	551.8	677.1	267.8	265.6	233.6	254.6	67.7	66.6	67.3	66.8	229.60	30.21	6936.22
2006/11/17	17:34:00	1210.1	917.1	285.9	299.1	258.4	263.4	551.7	648.7	268.2	265.8	234.0	254.6	67.7	66.2	67.8	66.8	230.20	30.28	6970.46
2006/11/17	17:35:00	1210.1	919.3	285.7	297.8	258.2	263.5	553.4	581.8	267.9	265.7	234.0	254.5	68.2	66.6	68.2	67.1	230.20	30.28	6970.46
2006/11/17	17:36:00	1210.6	919.1	285.4	298.6	257.8	263.0	553.2	656.3	267.9	265.8	234.0	254.4	66.0	66.6	68.1	66.3	230.20	30.28	6972.76
2006/11/17	17:37:00	1209.9	920.0	285.9	298.9	257.4	263.5	553.1	698.4	267.4	265.7	234.1	254.4	67.2	66.3	68.6	66.1	230.10	30.26	6965.13
2006/11/17	17:38:00	1209.8	918.9	285.9	298.5	257.8	263.2	552.9	671.1	267.8	265.5	233.9	254.4	66.8	67.7	68.2	66.1	230.10	30.27	6965.13
2006/11/17	17:39:00	1210.1	919.3	285.9	299.1	257.7	262.9	553.7	686.8	267.2	265.6	233.8	254.4	67.0	66.6	67.9	67.3	230.20	30.28	6970.46
2006/11/17	17:40:00	1210.2	920.8	285.9	297.7	256.7	263.7	553.9	646.8	267.9	266.0	233.9	254.5	66.4	66.6	69.1	66.6	230.10	30.26	6965.85
2006/11/17	17:41:00	1209.6	918.7	285.9	297.8	256.4	262.9	553.1	489.5	267.9	266.0	233.8	254.5	65.6	66.6	68.2	66.1	230.20	30.24	6967.30
2006/11/17	17:42:00	1210.4	918.8	285.9	298.6	257.4	263.4	552.6	645.2	267.4	266.0	233.8	254.5	65.5	66.3	67.8	66.8	230.10	30.23	6961.97
2006/11/17	17:43:00	1210.1	918.3	285.9	299.1	257.7	263.7	552.7	612.9	267.7	265.7	234.2	254.5	66.8	66.8	68.2	67.1	230.00	30.28	6964.40
2006/11/17	17:44:00	1210.9	917.7	286.0	297.9	257.7	263.7	553.2	605.1	267.9	265.6	233.9	254.5	67.7	67.2	68.4	67.0	230.20	30.28	6970.46
2006/11/17	17:45:00	1211.2	919.7	285.7	298.4	258.6	263.4	553.9	601.2	267.7	265.6	233.9	254.5	67.3	67.2	67.5	67.0	230.10	30.27	6965.13
2006/11/17	17:46:00	1209.7	920.0	285.9	298.4	257.8	263.2	552.9	545.7	267.9	265.6	233.9	254.4	67.1	66.8	67.8	67.1	230.10	30.28	6967.43
2006/11/17	17:47:00	1209.9	918.8	285.7	298.1	257.5	263.7	553.4	482.5	267.9	265.9	233.8	254.4	66.3	66.8	68.2	66.3	230.20	30.28	6972.76
2006/11/17	17:48:00	1209.9	921.3	285.7	298.8	258.4	263.4	552.9	606.9	267.9	265.6	234.0	254.4	66.8	66.8	67.7	66.4	230.20	30.28	6970.46
2006/11/17	17:49:00	1210.1	919.7	285.9	298.4	258.0	263.0	552.4	510.9	267.9	265.6	234.1	254.5	67.0	66.4	67.7	66.2	230.20	30.28	6970.46
2006/11/17	17:50:00	1209.3	919.3	285.7	298.9	257.9	263.7	553.5	630.7	267.8	265.7	233.9	254.4	66.4	66.6	67.9	67.7	230.20	30.28	6972.76
2006/11/17	17:51:00	1209.1	919.9	285.9	299.1	256.4	262.7	553.5	467.8	267.1	265.4	233.8	254.4	66.4	64.8	68.1	65.6	230.20	30.26	6968.88
2006/11/17	17:52:00	1209.1	920.0	285.9	298.4	257.7	262.9	553.7	509.2	267.1	265.3	233.9	254.4	67.3	65.1	68.0	65.7	229.70	30.23	6943.83
2006/11/17	17:53:00	1210.1	916.9	285.9	298.8	258.2	263.5	552.8	503.5	267.4	265.5	233.8	254.4	65.7	65.8	68.0	65.9	230.10	30.28	6970.46
2006/11/17	17:54:00	1209.6	919.9	285.9	299.3	257.4	263.2	554.0	477.2	267.9	265.7	233.9	254.6	65.8	66.8	67.5	67.0	230.10	30.27	6965.13
2006/11/17	17:55:00	1210.1	917.4	286.2	299.3	257.7	263.7	553.9	477.2	267.9	265.9	233.9	254.6	67.1	66.6	68.1	66.1	230.10	30.27	6967.43
2006/11/17	17:56:00	1209.6	918.1	286.0	299.4	257.2	263.0	554.0	512.0	268.1	266.1	234.1	254.6	66.8	66.8	67.8	66.8	230.10	30.27	6965.13
2006/11/17	17:57:00	1209.4	916.4	286.0	299.1	258.4	263.5	552.7	512.0	267.9	265.7	234.0	254.7	66.0	66.6	67.8	66.8	230.00	30.19	6946.72
2006/11/17	17:58:00	1210.2	919.6	286.2	298.6	258.6	263.5	552.9	598.0	267.9	265.9	234.2	254.7	67.3	65.7	68.0	66.6	230.10	30.27	6965.13
2006/11/17	17:59:00	1210.2	918.8	286.0	299.6	257.5	263.7	552.0	590.8	267.0	265.9	234.2	254.7	67.1	66.3	67.2	65.9	230.10	30.27	6965.13
2006/11/17	18:00:00	1209.6	918.9	285.9	298.3	257.7	263.2	553.1	654.2	267.8	265.9	234.0	254.6	65.9	66.4	67.2	66.0	230.10	30.26	6965.13
2006/11/17	18:01:00	1211.4	917.2	285.9	298.6	258.4	263.2	552.1	631.4	267.8	265.9	234.1	254.6	66.8	66.6	67.6	65.7	230.10	30.27	6965.13
2006/11/17	18:02:00	1211.9	917.4	285.9	299.3	258.4	263.4	552.6	595.1	267.7	265.7	234.2	254.6	67.1	65.9	68.3	65.5	230.00	30.25	6957.50
2006/11/17	18:03:00	1210.4	920.0	286.2	299.4	256.9	263.7	554.9	572.7	267.8	265.7	234.2	254.6	66.3	66.8	67.3	65.7	230.10	30.26	6965.85
2006/11/17	18:04:00	1210.8	918.9	285.9	298.9	257.9	263.4	552.3	563.7	268.4	266.1	234.1	254.6	66.1	66.8	67.7	66.8	230.20	30.27	6968.15
2006/11/17	18:05:00	1210.2	921.2	285.9	297.8	257.5	263.4	552.3	532.6	267.7	265.9	234.1	254.6	65.9	66.6	68.0	66.4	230.00	30.26	6962.10
2006/11/17	18:06:00	1210.0	917.5	285.9	298.4	258.0	263.8	553.4	504.7	267.2	265.8	233.9	254.6	65.7	65.9	67.1	65.9	230.10	30.24	6961.25
2006/11/17	18:07:00	1210.0	915.6	285.9	298.4	257.7	263.2	552.8	530.4	266.8	265.5	234.0	254.6	67.5	65.7	67.8	64.6	230.10	30.27	6965.13
2006/11/17	18:08:00	1210.7	915.6	286.0	298.4	258.3	263.2	552.4	566.5	267.2	265.3	233.9	254.5	67.2	65.6	67.7	65.4	230.10	30.27	6968.15
2006/11/17	18:09:00	1211.0	919.4	286.0	298.9	257.4	263.2	553.4	487.2	267.6	265.6	233.9	254.5	66.3	66.4	68.0	65.7	229.90	30.26	6956.77
2006/11/17	18:10:00	1209.4	920.2	286.0	298.8	256.9	263.4	554.5	459.0	267.9	265.7	233.8	254.5	66.8	66.6	67.3	65.8	230.10	30.27	6965.13
2006/11/17	18:11:00	1209.1	920.6	285.9	297.9	257.5	263.5	553.7	467.8	267.3	265.7	233.8	254.5	66.8	66.4	67.5	65.7	229.60	30.24	6943.10
2006/11/17	18:12:00	1209.8	917.9	285.9	297.8	257.4	263.5	554.2	519.4	267.3	265.5	233.9	254.5	67.3	66.6	68.3	65.7	230.20	30.26	6968.15
2006/11/17	18:13:00	1209.9	918.4	285.9	298.2	256.4	263.4	552.9	596.9	267.9	265.9	234.0	254.6	66.8	66.4	67.8	66.1	230.20	30.27	6970.46
2006/11/17	18:14:00	1209.7	918.1	285.9	298.5	258.3	263.4	552.7	515.1	267.6	265.8	233.9	254.6	66.3	65.9	67.8	66.6	229.80	30.23	6958.95
2006/11/17	18:15:00	1210.6	920.1	285.9	298.0	257.8	263.5	553.2	487.7	267.6	265.9	234.1	254.5	66.4	66.3	68.1	66.2	229.80	30.24	6949.15
2006/11/17	18:16:00	1209.8	917.5	286.0	297.8	258.0	263.4	553.2	453.3	267.3	265.4	233.9	254.5	67.3	67.1	68.3	65.9	230.20	30.28	6970.46
2006/11/17	18:17:00	1210.1	919.9	285.9	297.8	258.0	263.4	553.4	545.6	267.4	265.1	233.9	254.5	67.3	66.1	68.0	65.4	229.70	30.23	6950.72
2006/11/17	18:18:00	1209.0	920.2	285.6	298.3	257.8	263.2	551.2	563.6	267.2	265.4	234.1	254.5	67.3	66.0	67.8	66.3	230.10	30.26	6965.85
2006/11/17	18:19:00	1209.0	918.1	285.7	298.8	257.0	263.2	552.8	521.2	267.1	265.0	234.1	254.5	66.0	65.6	68.8	66.4	230.10	30.27	6968.15
2006/11/17	18:20:00	1210.2	921.1	285.9	298.4	257.0	263.2	554.7	496.4	267.1	264.9	234.0	254.5	65.4	65.5	67.3	66.0	229.70	30.24	6946.13
2006/11/17	18:21:00	1209.4	919.9	285.9	298.9	257.2	263.4	554.0	522.7	266.7	264.8	234.0	254.4	65.6	66.3	66.6	65.9	230.10	30.27	6967.43

Heat Rise Test
1st Run

Date	Time	TC1	TC2	TC3	TC4	TC5	TC6	TC7	TC8	TC9	TC10	TC11	TC12	TC13	TC14	TC15	TC16	VDC	Amps	Watts
2006/11/17	18:22:00	1210.4	911.1	285.9	298.8	255.9	262.9	550.2	507.0	266.9	264.9	233.9	254.4	65.6	63.9	66.8	65.6	229.80	30.26	6953.75
2006/11/17	18:23:00	1209.4	919.0	285.7	297.8	255.7	262.6	553.7	545.4	267.6	264.9	233.7	254.4	65.3	64.2	66.8	65.2	230.00	30.26	6959.80
2006/11/17	18:24:00	1210.2	916.1	285.6	297.5	256.9	262.4	553.2	505.8	266.9	264.3	233.7	254.4	66.6	65.8	67.3	64.3	230.10	30.24	6958.22
2006/11/17	18:25:00	1210.0	920.7	285.6	297.6	257.4	262.6	552.9	481.1	267.1	264.5	233.9	254.3	66.3	65.7	67.8	64.2	230.10	30.25	6962.83
2006/11/17	18:26:00	1210.1	917.4	285.7	298.4	256.9	263.0	553.7	507.0	267.1	264.9	233.7	254.4	66.8	65.5	67.2	65.7	229.70	30.26	6950.72
2006/11/17	18:27:00	1209.6	919.0	285.9	298.6	257.4	263.4	553.7	488.2	267.1	264.9	233.7	254.4	66.6	65.7	67.3	66.2	230.00	30.25	6957.50
2006/11/17	18:28:00	1209.9	920.4	285.9	298.5	256.2	263.2	553.2	466.7	267.9	265.3	233.6	254.4	65.7	65.5	67.3	65.7	230.00	30.26	6959.80
2006/11/17	18:29:00	1209.8	918.7	285.9	297.4	257.5	263.0	553.9	443.1	266.8	265.4	233.9	254.4	66.3	65.3	67.7	64.6	230.00	30.27	6962.10
2006/11/17	18:30:00	1210.0	920.4	285.7	298.5	257.2	262.9	553.5	491.2	267.1	265.2	233.8	254.5	65.9	65.6	67.6	64.6	230.20	30.27	6970.46
2006/11/17	18:31:00	1210.1	919.6	285.7	296.2	257.5	262.7	555.5	470.7	267.9	265.3	233.9	254.6	66.3	66.2	67.5	65.3	230.20	30.27	6970.46
2006/11/17	18:32:00	1209.3	919.4	286.0	298.9	256.4	262.9	554.3	517.2	267.9	265.5	234.0	254.6	65.5	65.6	67.0	64.6	230.20	30.28	6970.46
2006/11/17	18:33:00	1208.7	920.7	286.0	299.1	257.8	263.2	555.3	504.0	267.6	265.4	233.8	254.6	65.0	65.6	66.8	65.2	230.20	30.28	6970.46
2006/11/17	18:34:00	1208.6	918.2	285.9	298.1	257.0	263.2	552.4	444.5	267.6	265.3	233.7	254.5	65.9	65.7	67.6	65.8	230.10	30.26	6968.15
2006/11/17	18:35:00	1209.1	919.1	285.9	298.8	257.0	262.9	553.7	448.9	267.3	265.4	233.9	254.5	66.0	67.0	67.0	65.9	230.10	30.28	6969.73
2006/11/17	18:36:00	1209.6	919.1	286.2	298.2	257.4	263.2	554.3	423.7	267.7	265.4	233.7	254.4	64.8	64.4	66.8	65.7	229.70	30.23	6943.83
2006/11/17	18:37:00	1209.9	919.4	286.0	298.4	256.7	263.2	553.2	451.9	267.9	265.5	233.7	254.4	65.5	64.8	66.1	65.5	230.10	30.27	6965.13
2006/11/17	18:38:00	1209.9	919.6	286.2	298.5	256.5	262.9	553.2	472.0	267.9	266.0	233.6	254.4	65.7	66.8	67.2	66.2	229.30	30.19	6922.57
2006/11/17	18:39:00	1209.9	916.9	285.9	297.3	256.4	262.7	554.0	465.9	267.6	265.7	233.6	254.4	66.3	65.7	66.8	66.6	230.10	30.24	6962.83
2006/11/17	18:40:00	1210.0	920.9	286.2	298.4	257.7	262.9	552.4	513.1	267.0	265.5	233.9	254.4	66.2	65.2	67.3	64.1	229.80	30.26	6953.75
2006/11/17	18:41:00	1210.4	915.3	285.9	298.6	257.2	263.4	552.8	458.3	267.4	265.2	234.0	254.4	65.8	65.4	67.1	64.0	230.00	30.26	6959.80
2006/11/17	18:42:00	1209.4	916.9	285.9	298.1	257.7	262.9	553.1	462.0	267.7	265.5	234.0	254.4	66.0	65.3	67.1	65.1	229.80	30.23	6949.15
2006/11/17	18:43:00	1208.9	918.8	286.0	298.3	255.7	263.2	552.8	464.5	267.3	265.1	233.9	254.4	65.0	65.4	67.6	65.1	229.90	30.24	6952.18
2006/11/17	18:44:00	1209.8	917.4	286.2	299.0	255.7	262.9	553.7	523.5	268.2	265.6	233.7	254.5	65.5	66.4	67.1	65.4	230.00	30.19	6952.76
2006/11/17	18:45:00	1211.0	917.6	286.0	298.2	257.5	262.7	553.4	514.5	267.1	265.2	233.7	254.5	65.6	64.3	66.8	64.8	229.90	30.22	6956.64
2006/11/17	18:46:00	1208.9	920.6	286.0	298.6	257.2	263.4	552.7	447.9	267.6	265.6	234.1	254.5	65.3	65.9	66.8	65.4	230.20	30.28	6970.46
2006/11/17	18:47:00	1210.4	919.1	286.2	298.0	257.4	263.2	554.5	564.2	267.7	265.3	234.1	254.5	65.4	65.2	67.3	64.2	230.20	30.27	6970.46
2006/11/17	18:48:00	1209.7	917.8	286.2	298.3	257.9	263.4	552.7	566.4	267.1	265.6	234.1	254.6	65.4	65.4	67.3	63.9	230.20	30.27	6968.15
2006/11/17	18:49:00	1208.4	919.6	286.0	298.5	256.9	263.4	553.9	476.5	267.2	265.5	234.1	254.6	66.6	65.3	68.0	65.4	229.20	30.14	6908.09
2006/11/17	18:50:00	1208.6	919.7	286.2	298.9	257.0	263.4	553.5	488.2	267.2	265.4	234.1	254.5	65.3	65.3	67.3	65.4	230.20	30.28	6970.46
2006/11/17	18:51:00	1209.9	916.4	286.2	298.0	256.5	263.2	552.9	570.0	267.4	265.2	234.0	254.5	65.7	65.6	67.5	65.4	229.50	30.22	6935.49
2006/11/17	18:52:00	1211.0	917.7	286.2	297.9	257.8	263.2	554.4	579.0	267.0	264.8	233.9	254.5	66.6	65.5	67.3	64.8	229.90	30.20	6955.06
2006/11/17	18:53:00	1209.6	917.6	286.0	298.2	257.2	263.2	553.2	545.1	267.1	265.2	233.8	254.4	66.4	65.8	67.3	65.1	230.20	30.27	6970.46
2006/11/17	18:54:00	1209.1	919.6	286.0	298.6	257.7	263.2	553.5	520.0	267.0	264.9	233.7	254.4	66.2	65.2	67.2	64.8	229.70	30.20	6936.94
2006/11/17	18:55:00	1208.7	919.9	286.0	298.2	257.2	262.9	552.4	510.7	266.7	264.7	233.9	254.4	66.1	65.1	67.2	65.4	229.70	30.19	6934.64
2006/11/17	18:56:00	1209.6	917.8	285.9	297.9	257.0	262.9	552.9	477.6	266.4	264.7	233.8	254.3	65.7	64.6	66.0	64.3	230.10	30.22	6959.67
2006/11/17	18:57:00	1209.6	919.9	285.9	298.2	257.2	263.2	552.9	446.3	267.1	264.7	233.8	254.3	65.7	65.6	67.2	64.4	230.00	30.25	6957.50
2006/11/17	18:58:00	1210.1	919.1	285.7	298.1	256.9	262.7	552.4	469.1	266.9	264.8	233.8	254.3	65.5	65.2	66.3	64.4	229.00	30.22	6920.38
2006/11/17	18:59:00	1208.9	919.4	285.9	298.1	257.2	262.9	553.5	471.7	266.7	264.8	234.0	254.3	65.3	65.0	66.0	63.3	230.20	30.19	6955.78
2006/11/17	19:00:00	1208.9	919.6	286.0	298.3	256.9	262.6	553.7	421.4	267.1	264.8	233.9	254.3	66.0	65.2	65.8	63.7	230.00	30.26	6959.80
2006/11/17	19:01:00	1209.4	918.1	285.6	298.1	257.7	262.9	553.9	527.3	267.2	264.9	233.7	254.3	65.5	65.1	66.0	64.6	229.90	30.26	6963.67
2006/11/17	19:02:00	1207.6	919.0	285.9	298.2	257.9	262.9	553.7	485.2	267.2	265.0	233.9	254.3	66.0	65.2	66.6	64.6	229.30	30.21	6927.15
2006/11/17	19:03:00	1208.9	919.3	285.9	297.6	256.7	262.7	553.9	534.9	267.6	265.0	233.8	254.4	66.0	65.5	67.0	65.4	230.20	30.23	6958.95
2006/11/17	19:04:00	1208.2	921.2	286.2	299.1	257.4	263.4	554.5	534.7	267.4	264.8	234.0	254.4	66.3	65.0	67.1	64.8	229.60	30.23	6940.81
2006/11/17	19:05:00	1208.6	919.6	286.2	298.1	257.4	263.4	553.7	484.1	267.1	264.8	234.0	254.5	66.2	64.1	67.0	63.6	229.80	30.23	6946.85
2006/11/17	19:06:00	1208.9	919.3	286.0	298.0	257.2	263.4	552.4	461.9	267.1	264.7	234.0	254.5	65.8	64.4	67.0	64.8	229.60	30.21	6936.22
2006/11/17	19:07:00	1209.9	918.9	285.9	298.1	256.7	263.2	554.0	457.5	267.8	264.8	233.9	254.5	64.6	65.8	67.3	64.6	229.60	30.14	6920.14
2006/11/17	19:08:00	1209.6	916.6	285.9	297.7	256.4	263.4	553.7	533.7	267.1	264.7	233.7	254.5	65.6	65.3	67.3	64.4	230.10	30.26	6967.43
2006/11/17	19:09:00	1209.1	918.3	286.2	297.6	257.7	263.4	553.5	491.7	267.1	264.7	234.0	254.4	65.9	65.1	66.8	65.0	229.80	30.27	6956.05
2006/11/17	19:10:00	1209.8	918.7	285.9	297.6	257.2	263.2	552.2	586.8	266.3	264.6	234.1	254.4	65.9	65.0	67.1	64.8	230.20	30.28	6970.46
2006/11/17	19:11:00	1209.4	918.4	286.2	297.9	257.4	263.4	552.7	555.8	267.1	264.3	233.9	254.4	65.4	65.0	67.0	64.8	229.80	30.26	6953.75
2006/11/17	19:12:00	1209.1	917.1	285.9	298.2	257.2	262.9	553.9	548.0	266.8	264.5	233.9	254.4	65.9	65.0	66.6	65.1	230.20	30.27	6970.46
2006/11/17	19:13:00	1209.1	918.9	286.0	297.7	257.0	262.2	553.4	539.5	266.4	264.4	233.9	254.4	65.5	65.0	67.1	65.3	230.10	30.27	6965.13
2006/11/17	19:14:00	1209.7	918.9	285.9	298.4	257.2	263.2	554.8	505.2	266.8	264.4	234.2	254.4	66.4	64.6	67.0	64.3	230.10	30.27	6965.13
2006/11/17	19:15:00	1209.0	918.9	286.0	298.5	257.8	263.2	554.6	443.0	266.8	264.4	234.0	254.4	65.9	65.0	66.6	64.3	230.20	30.26	6970.46
2006/11/17	19:16:00	1210.1	921.0	286.2	297.4	256.7	263.2	554.2	488.2	266.7	264.5	233.8	254.4	65.9	64.6	66.6	64.2	230.20	30.28	6970.46
2006/11/17	19:17:00	1209.6	919.0	286.0	297.6	256.1	263.2	553.7	492.2	266.9	264.6	234.0	254.4	65.8	63.7	66.0	64.1	229.90	30.26	6959.07

Heat Rise Test
1st Run

Date	Time	TC1	TC2	TC3	TC4	TC5	TC6	TC7	TC8	TC9	TC10	TC11	TC12	TC13	TC14	TC15	TC16	VDC	Amps	Watts
2006/11/17	19:18:00	1208.6	919.9	286.2	298.5	256.4	263.2	552.2	434.7	266.3	264.6	233.8	254.4	65.6	63.5	65.9	64.0	229.90	30.25	6954.47
2006/11/17	19:19:00	1209.4	919.6	286.2	297.9	257.4	262.7	553.9	449.2	266.9	264.6	233.8	254.4	65.8	64.8	67.0	64.1	230.20	30.21	6957.36
2006/11/17	19:20:00	1210.1	916.9	286.0	297.4	256.7	262.9	553.1	479.7	266.7	264.4	233.8	254.3	65.7	65.0	66.6	64.6	230.20	30.28	6970.46
2006/11/17	19:21:00	1209.1	919.1	285.9	297.5	257.2	263.0	553.9	510.7	267.2	264.5	233.6	254.3	65.0	65.2	65.6	64.6	230.10	30.27	6967.43
2006/11/17	19:22:00	1208.9	918.9	285.9	297.5	256.9	263.0	553.7	491.5	266.5	264.2	233.7	254.2	67.0	64.8	66.0	65.0	230.10	30.27	6965.13
2006/11/17	19:23:00	1209.4	918.7	285.9	298.5	256.9	262.9	553.9	504.3	266.8	264.3	233.6	254.2	65.7	64.3	66.6	64.8	230.10	30.27	6967.43
2006/11/17	19:24:00	1209.4	919.9	285.9	297.6	256.9	262.9	553.4	443.4	267.1	264.4	233.5	254.2	65.7	64.8	66.4	64.8	230.20	30.28	6970.46
2006/11/17	19:25:00	1210.1	918.0	286.2	298.2	257.2	263.4	553.5	478.5	266.8	264.3	233.6	254.3	65.0	64.6	66.2	63.2	230.10	30.27	6965.13
2006/11/17	19:26:00	1210.4	917.9	286.2	297.6	257.5	263.4	554.2	548.9	267.1	264.4	233.7	254.3	64.8	65.3	66.2	63.5	230.20	30.27	6968.15
2006/11/17	19:27:00	1209.7	919.3	286.2	297.9	256.5	263.4	554.3	495.5	267.4	264.6	233.8	254.4	66.3	65.2	66.8	64.6	230.20	30.27	6968.15
2006/11/17	19:28:00	1209.3	918.8	286.2	297.7	257.0	263.0	553.9	443.5	267.4	264.7	233.4	254.3	65.5	66.2	66.6	64.6	229.60	30.19	6933.92
2006/11/17	19:29:00	1208.4	917.5	286.0	298.6	257.7	263.2	554.7	550.3	267.1	264.6	233.6	254.2	65.4	65.3	66.4	64.8	229.60	30.20	6933.92
2006/11/17	19:30:00	1209.4	919.0	286.0	298.4	257.5	263.0	555.0	446.3	267.0	264.3	233.7	254.3	66.0	64.2	66.8	64.3	230.20	30.27	6968.15
2006/11/17	19:31:00	1210.1	919.1	285.9	297.5	256.4	263.4	553.2	437.5	266.7	264.3	233.7	254.4	65.9	64.1	65.9	64.0	230.10	30.27	6965.13
2006/11/17	19:32:00	1209.1	917.7	286.2	298.2	257.5	263.2	554.3	432.2	267.3	264.8	233.8	254.3	65.7	63.9	66.2	63.6	229.60	30.21	6936.22
2006/11/17	19:33:00	1208.4	920.2	286.2	298.4	256.9	263.2	554.9	463.7	266.4	264.7	233.7	254.3	65.5	65.0	67.0	65.0	230.10	30.25	6960.53
2006/11/17	19:34:00	1209.8	918.1	286.2	298.1	256.2	263.4	554.2	490.5	267.4	264.6	233.7	254.4	65.9	64.6	66.8	64.4	229.80	30.23	6946.85
2006/11/17	19:35:00	1209.9	920.7	286.2	297.8	255.9	263.0	554.9	436.0	267.1	264.7	233.7	254.4	65.5	65.9	66.8	64.6	229.90	30.27	6959.07
2006/11/17	19:36:00	1209.8	919.6	285.9	297.6	257.7	262.9	554.6	427.1	266.9	264.8	233.9	254.3	65.4	64.6	66.4	64.4	230.10	30.25	6960.53
2006/11/17	19:37:00	1209.7	918.2	286.0	298.1	257.7	263.2	554.2	637.4	267.3	264.4	233.8	254.3	65.4	64.6	66.4	63.9	229.70	30.19	6937.66
2006/11/17	19:38:00	1210.1	919.1	285.9	298.8	256.5	263.7	554.3	636.3	267.1	264.5	233.9	254.3	65.3	64.8	66.2	64.3	230.20	30.21	6954.34
2006/11/17	19:39:00	1209.1	914.7	286.2	297.9	258.0	263.4	553.2	478.7	267.8	264.9	233.3	254.3	64.8	66.1	66.3	64.8	229.90	30.25	6954.47
2006/11/17	19:40:00	1210.2	919.1	285.9	297.3	256.7	263.4	553.7	602.3	267.7	264.9	233.4	254.3	65.9	65.3	66.6	65.6	230.10	30.19	6952.76
2006/11/17	19:41:00	1210.5	919.1	286.0	297.2	257.4	263.2	554.5	484.6	267.7	265.1	233.7	254.4	65.9	65.4	67.5	65.0	230.00	30.27	6962.10
2006/11/17	19:42:00	1209.8	918.1	286.4	297.0	257.2	263.4	552.6	523.0	267.8	264.9	233.8	254.3	67.0	66.6	67.3	65.7	229.90	30.27	6959.07
2006/11/17	19:43:00	1209.0	919.3	286.0	298.3	257.0	263.2	553.5	587.6	267.6	265.1	234.0	254.4	67.6	65.4	67.0	66.1	229.70	30.20	6936.94
2006/11/17	19:44:00	1209.6	919.0	286.4	298.1	256.9	263.4	554.0	569.4	266.7	264.9	233.8	254.4	67.0	64.6	67.3	64.8	229.60	30.20	6933.92
2006/11/17	19:45:00	1210.1	918.1	286.2	298.3	256.9	263.2	554.7	589.0	267.8	265.4	233.6	254.4	66.4	67.0	67.1	66.0	230.20	30.23	6961.97
2006/11/17	19:46:00	1209.8	918.3	286.2	297.1	256.2	263.4	553.4	518.1	267.4	264.8	233.6	254.4	66.4	66.2	67.6	66.4	230.10	30.26	6965.13
2006/11/17	19:47:00	1210.6	917.5	286.2	297.8	257.0	263.5	552.6	520.3	267.3	264.9	233.7	254.4	67.0	65.7	67.9	66.3	229.80	30.23	6949.88
2006/11/17	19:48:00	1210.2	917.4	286.2	298.1	257.4	263.4	554.5	553.5	267.3	264.9	233.8	254.3	66.6	66.1	67.9	65.3	230.10	30.26	6967.43
2006/11/17	19:49:00	1209.3	917.9	286.2	297.2	257.0	263.4	553.1	575.5	267.6	264.9	233.7	254.3	67.0	66.0	67.9	66.4	230.20	30.22	6956.64
2006/11/17	19:50:00	1208.4	920.4	285.9	297.8	255.7	262.9	553.2	605.1	266.4	264.8	233.8	254.3	67.0	66.6	67.3	64.8	229.70	30.23	6943.83
2006/11/17	19:51:00	1208.6	919.4	285.9	298.8	254.0	262.7	553.9	594.7	266.5	264.8	233.8	254.3	67.3	68.1	67.1	64.8	230.20	30.27	6968.15
2006/11/17	19:52:00	1208.9	919.1	286.2	297.3	256.7	263.4	553.5	509.9	267.3	264.8	233.9	254.3	67.0	66.8	67.3	65.3	230.00	30.20	6952.04
2006/11/17	19:53:00	1208.4	919.0	286.0	297.3	256.4	263.2	554.9	515.7	267.4	264.8	233.5	254.3	65.5	66.6	67.3	65.7	229.70	30.19	6934.64
2006/11/17	19:54:00	1209.0	919.9	286.2	297.3	256.7	263.2	554.6	544.2	267.4	264.9	233.7	254.3	66.3	65.7	67.6	66.0	229.90	30.22	6954.47
2006/11/17	19:55:00	1209.6	919.4	286.4	297.9	256.5	263.0	553.9	571.6	267.4	264.9	233.9	254.3	66.1	66.8	68.1	65.3	229.70	30.20	6939.24
2006/11/17	19:56:00	1209.8	916.6	286.0	296.9	257.7	263.4	554.0	575.9	267.2	264.8	233.8	254.3	66.6	67.3	68.1	64.6	230.10	30.22	6959.67
2006/11/17	19:57:00	1210.6	916.6	286.2	298.2	257.2	262.9	554.2	607.9	267.1	264.8	234.0	254.3	66.6	66.2	67.7	64.6	230.20	30.27	6970.46
2006/11/17	19:58:00	1209.7	920.4	286.3	297.5	257.2	263.4	553.9	561.2	267.3	264.6	233.9	254.3	67.1	66.8	67.8	65.1	229.90	30.26	6956.77
2006/11/17	19:59:00	1209.6	919.9	285.9	297.6	257.2	263.4	554.5	540.5	267.1	264.4	233.9	254.3	66.6	66.2	68.1	65.1	230.20	30.28	6970.46
2006/11/17	20:00:00	1209.4	919.1	286.2	298.1	257.8	263.4	554.0	551.8	267.4	264.8	233.9	254.3	66.8	66.8	68.3	65.7	230.20	30.28	6970.46
2006/11/17	20:01:00	1209.3	920.5	286.4	298.2	257.4	263.4	552.3	671.4	267.7	264.7	233.9	254.3	68.1	66.4	68.0	65.9	230.20	30.27	6968.15
2006/11/17	20:02:00	1209.4	920.1	286.4	297.1	257.4	263.2	553.7	577.3	266.5	264.8	233.9	254.4	67.0	64.8	67.3	64.6	230.10	30.28	6967.43
2006/11/17	20:03:00	1208.1	915.3	285.9	298.3	255.9	263.0	555.0	592.6	266.3	264.5	233.9	254.4	66.6	65.5	67.1	63.7	230.20	30.27	6968.15
2006/11/17	20:04:00	1208.9	915.9	286.3	298.9	257.2	263.0	554.4	589.2	266.9	264.7	233.8	254.4	67.3	67.0	67.7	64.8	230.20	30.27	6968.15
2006/11/17	20:05:00	1209.6	917.9	286.3	297.3	257.7	263.4	554.0	482.7	266.9	264.5	233.6	254.3	67.2	65.7	67.9	65.3	230.20	30.28	6970.46
2006/11/17	20:06:00	1210.2	919.1	286.3	297.0	256.7	262.7	553.2	540.7	266.2	264.5	233.6	254.4	66.8	65.6	67.6	64.1	230.10	30.27	6965.13
2006/11/17	20:07:00	1209.6	920.4	286.2	297.9	256.4	263.2	554.2	558.3	266.2	264.4	233.9	254.4	66.6	65.0	67.1	64.0	230.20	30.28	6970.46
2006/11/17	20:08:00	1210.1	919.9	286.4	297.5	257.4	263.2	554.5	570.7	267.1	264.5	233.8	254.3	66.6	65.3	67.8	65.2	230.20	30.28	6970.46
2006/11/17	20:09:00	1210.1	919.3	286.3	297.5	256.9	263.2	555.1	585.5	266.7	264.5	233.7	254.2	67.2	65.8	67.7	64.3	230.10	30.27	6965.13
2006/11/17	20:10:00	1208.7	921.0	286.2	297.8	257.4	263.0	554.8	568.4	266.5	264.6	233.9	254.3	66.4	65.8	67.3	64.3	230.20	30.27	6970.46
2006/11/17	20:11:00	1208.7	917.6	286.3	298.3	257.4	263.4	554.4	513.5	267.2	264.4	233.7	254.4	67.0	64.8	67.3	64.8	230.20	30.27	6968.15
2006/11/17	20:12:00	1209.4	918.1	286.0	297.0	256.2	263.2	555.0	519.7	266.1	264.2	233.6	254.4	67.2	64.8	67.7	64.2	230.00	30.25	6957.50
2006/11/17	20:13:00	1210.2	917.9	286.3	297.9	256.7	263.2	553.9	555.4	266.5	264.2	233.7	254.3	67.0	65.9	67.6	64.6	230.20	30.28	6970.46

Heat Rise Test
1st Run

Date	Time	TC1	TC2	TC3	TC4	TC5	TC6	TC7	TC8	TC9	TC10	TC11	TC12	TC13	TC14	TC15	TC16	VDC	Amps	Watts
2006/11/17	20:14:00	1209.7	917.4	286.0	297.9	255.7	263.4	553.2	563.1	267.3	264.4	233.6	254.3	65.9	65.6	67.6	64.6	230.20	30.28	6970.46
2006/11/17	20:15:00	1209.6	917.4	286.2	297.9	257.2	262.9	553.7	620.9	267.3	264.5	233.7	254.3	67.0	65.6	67.2	65.2	230.20	30.28	6970.46
2006/11/17	20:16:00	1209.1	918.3	286.3	296.7	257.4	263.4	554.4	555.0	266.2	264.4	233.5	254.3	67.0	64.1	67.6	64.1	230.20	30.28	6970.46
2006/11/17	20:17:00	1209.9	917.6	286.3	297.2	256.2	262.4	556.1	641.2	266.4	264.2	233.6	254.3	66.1	64.6	67.1	64.1	230.20	30.28	6972.76
2006/11/17	20:18:00	1208.9	918.7	285.9	298.1	256.5	263.0	554.9	592.9	266.4	263.9	233.7	254.3	66.2	64.2	67.3	64.4	230.20	30.28	6970.46
2006/11/17	20:19:00	1208.6	920.0	285.9	297.5	256.7	263.2	555.4	553.7	266.6	264.2	233.7	254.3	67.1	66.0	67.2	64.8	230.20	30.28	6972.76
2006/11/17	20:20:00	1210.4	918.0	286.2	297.1	256.4	263.0	554.2	528.5	266.6	264.3	233.6	254.3	67.1	66.0	67.5	64.3	230.20	30.28	6972.76
2006/11/17	20:21:00	1209.6	916.1	286.2	297.4	256.9	263.7	554.3	558.4	267.0	264.5	233.6	254.3	67.1	66.8	67.1	65.1	230.20	30.28	6970.46
2006/11/17	20:22:00	1209.6	916.6	286.3	298.2	257.2	263.4	555.1	642.3	267.2	264.8	233.6	254.3	67.3	65.3	67.7	65.6	230.20	30.28	6970.46
2006/11/17	20:23:00	1209.8	917.8	286.4	297.7	257.2	263.0	555.1	577.8	267.0	264.3	233.5	254.2	67.0	64.6	67.3	65.0	230.20	30.28	6972.76
2006/11/17	20:24:00	1210.1	916.4	286.4	297.8	256.9	263.4	554.7	512.6	266.3	264.2	233.5	254.2	66.8	65.7	67.5	64.2	230.20	30.28	6970.46
2006/11/17	20:25:00	1210.5	918.9	286.2	297.9	256.4	262.9	554.6	618.8	266.0	264.3	233.6	254.2	66.2	64.8	67.3	64.0	230.20	30.28	6970.46
2006/11/17	20:26:00	1209.3	918.1	286.2	297.9	256.1	262.9	555.9	567.4	265.6	264.2	233.6	254.2	66.1	65.5	66.3	63.6	230.20	30.28	6972.76
2006/11/17	20:27:00	1209.0	918.6	286.4	297.6	256.2	263.4	556.4	571.0	266.8	264.2	233.6	254.2	66.6	66.3	67.2	64.6	230.20	30.28	6970.46
2006/11/17	20:28:00	1209.0	920.5	286.4	298.0	256.4	263.5	553.5	579.9	266.7	264.6	233.6	254.3	66.8	65.7	67.7	64.8	230.20	30.28	6970.46
2006/11/17	20:29:00	1209.1	915.5	286.3	298.1	256.9	263.2	554.3	526.2	266.9	264.3	233.6	254.3	66.8	66.1	66.8	64.8	230.20	30.28	6970.46
2006/11/17	20:30:00	1208.6	918.2	286.4	297.3	256.1	263.2	553.7	578.9	267.6	264.3	233.4	254.3	67.0	67.3	67.3	65.5	230.20	30.27	6968.15
2006/11/17	20:31:00	1209.4	916.1	286.4	297.2	257.5	263.5	554.2	572.1	267.2	264.9	233.6	254.2	67.0	64.0	67.3	64.6	230.20	30.28	6970.46
2006/11/17	20:32:00	1208.2	920.4	286.2	298.3	256.1	263.2	555.6	543.0	267.2	264.7	233.5	254.3	65.5	64.0	67.0	64.4	230.10	30.26	6962.83
2006/11/17	20:33:00	1208.4	919.4	286.3	297.7	256.2	263.2	554.3	567.5	266.6	264.9	233.5	254.2	67.2	65.3	67.2	65.8	230.10	30.26	6962.83
2006/11/17	20:34:00	1208.6	917.8	286.3	298.3	256.4	263.5	554.0	520.0	267.1	264.6	233.5	254.2	67.1	65.6	68.1	65.2	230.20	30.28	6970.46
2006/11/17	20:35:00	1208.4	917.6	286.4	298.2	257.5	263.4	554.3	580.4	267.0	264.6	233.5	254.1	66.6	65.4	67.9	65.3	230.20	30.28	6970.46
2006/11/17	20:36:00	1207.3	915.3	286.4	297.5	257.0	263.2	554.9	528.1	267.1	264.2	233.7	254.1	66.0	64.6	66.6	64.8	230.20	30.28	6970.46
2006/11/17	20:37:00	1208.6	919.6	286.3	297.4	257.0	263.2	553.4	554.3	266.6	263.9	233.7	254.2	66.4	64.6	67.6	64.8	230.20	30.28	6970.46
2006/11/17	20:38:00	1208.4	916.7	286.2	298.1	256.9	263.2	553.9	564.3	266.6	264.3	233.7	254.2	66.8	66.8	67.6	64.6	230.20	30.28	6970.46
2006/11/17	20:39:00	1209.0	916.6	286.3	297.9	256.7	263.7	554.6	537.4	266.4	264.2	233.7	254.2	66.8	64.8	67.8	64.6	230.20	30.27	6970.46
2006/11/17	20:40:00	1209.0	918.2	286.3	297.3	255.6	262.9	552.8	564.4	266.9	264.4	233.7	254.2	66.6	65.6	67.8	64.6	230.20	30.27	6970.46
2006/11/17	20:41:00	1208.7	918.4	286.2	297.2	255.9	263.2	555.1	556.3	266.8	264.2	233.7	254.1	66.3	65.3	67.6	65.1	230.20	30.27	6970.46
2006/11/17	20:42:00	1209.7	917.1	286.2	297.5	257.2	263.2	553.4	531.4	267.0	264.5	233.7	254.1	66.1	65.4	67.3	65.4	230.20	30.27	6968.15
2006/11/17	20:43:00	1210.1	917.2	286.3	297.7	256.2	263.0	555.5	586.8	266.6	264.0	233.5	254.1	66.4	64.1	67.3	64.1	230.10	30.28	6967.43
2006/11/17	20:44:00	1208.9	918.0	286.4	298.3	256.4	263.2	554.9	541.2	267.2	264.2	233.5	254.2	66.8	66.3	67.1	65.1	230.20	30.28	6970.46
2006/11/17	20:45:00	1210.2	918.9	286.3	298.5	257.4	263.4	555.2	592.2	266.7	264.2	233.6	254.2	67.2	65.5	67.9	64.6	230.20	30.28	6972.76
2006/11/17	20:46:00	1208.9	916.9	286.2	297.4	256.7	263.5	554.2	542.7	266.9	264.6	233.5	254.2	66.6	66.6	67.2	65.2	230.20	30.28	6970.46
2006/11/17	20:47:00	1208.4	919.3	286.2	298.6	256.4	263.4	554.4	556.4	267.4	265.0	233.5	254.2	66.8	65.9	65.8	66.6	229.70	30.22	6941.53
2006/11/17	20:48:00	1208.4	918.0	286.4	298.2	256.2	263.7	554.8	599.5	266.8	264.3	233.6	254.2	66.6	65.6	67.2	65.7	230.20	30.20	6955.06
2006/11/17	20:49:00	1207.9	918.4	286.3	298.6	256.2	263.2	554.9	486.6	267.7	264.7	233.5	254.3	66.6	64.6	66.6	65.7	229.90	30.20	6942.98
2006/11/17	20:50:00	1209.0	917.8	286.4	298.3	256.5	263.4	554.9	579.1	266.5	264.3	233.8	254.3	66.6	65.0	67.5	64.3	230.10	30.27	6968.15
2006/11/17	20:51:00	1208.6	919.4	286.3	297.3	257.2	263.7	554.6	503.2	267.8	264.6	233.5	254.3	66.2	67.2	67.3	64.6	230.10	30.28	6969.73
2006/11/17	20:52:00	1208.9	919.9	286.5	298.3	256.9	263.2	554.4	492.2	267.1	264.9	233.5	254.3	66.4	64.3	67.1	66.0	229.60	30.18	6935.36
2006/11/17	20:53:00	1208.3	919.7	286.5	297.6	257.2	263.4	555.5	584.2	266.5	264.2	233.5	254.2	66.6	63.5	67.3	64.3	229.80	30.23	6946.85
2006/11/17	20:54:00	1208.7	919.4	286.3	298.2	256.4	263.7	556.0	506.4	267.4	264.5	233.4	254.3	66.2	65.4	67.9	65.0	230.20	30.27	6968.15
2006/11/17	20:55:00	1209.3	918.3	286.3	297.6	256.2	263.2	554.6	537.3	267.6	264.8	233.2	254.3	67.7	65.0	65.9	66.1	229.70	30.25	6948.43
2006/11/17	20:56:00	1210.1	918.7	286.7	297.4	257.0	263.4	555.1	521.1	267.0	264.7	233.7	254.3	66.6	65.2	67.1	64.6	230.10	30.28	6967.43
2006/11/17	20:57:00	1209.0	917.1	286.5	298.1	256.1	263.5	554.2	563.1	267.1	264.6	233.8	254.3	65.6	64.0	66.8	64.3	230.20	30.27	6968.15
2006/11/17	20:58:00	1209.8	916.9	286.2	298.2	256.4	263.2	553.7	571.1	266.8	264.7	233.7	254.3	65.5	65.4	66.3	64.8	230.20	30.28	6970.46
2006/11/17	20:59:00	1210.1	916.4	286.2	297.2	256.2	263.5	553.9	578.0	266.8	264.6	233.7	254.2	67.3	65.1	67.2	65.0	230.20	30.19	6958.80
2006/11/17	21:00:00	1208.7	919.1	286.5	297.8	257.5	263.7	553.7	517.0	267.0	264.4	233.7	254.2	66.8	64.8	67.3	64.6	230.20	30.27	6968.15
2006/11/17	21:01:00	1208.9	920.4	286.4	298.4	257.0	263.2	554.4	605.4	266.8	264.4	233.5	254.2	66.8	64.2	67.3	64.6	230.20	30.28	6970.46
2006/11/17	21:02:00	1208.6	919.3	286.4	297.9	256.9	262.9	553.9	540.9	266.0	264.4	233.6	254.2	66.6	65.1	66.8	63.8	230.10	30.27	6965.13
2006/11/17	21:03:00	1207.6	920.4	286.5	298.4	257.2	263.4	554.3	536.9	267.4	264.6	233.5	254.2	66.3	67.0	67.3	65.4	230.20	30.28	6970.46
2006/11/17	21:04:00	1209.4	919.0	286.4	298.1	256.9	263.7	554.7	557.2	267.1	264.3	233.6	254.1	66.6	65.9	68.2	65.8	229.70	30.27	6955.32
2006/11/17	21:05:00	1209.9	917.6	286.5	298.3	256.7	263.4	556.1	516.2	266.9	264.3	233.4	254.1	66.3	64.2	67.1	65.0	230.10	30.27	6970.46
2006/11/17	21:06:00	1209.4	917.1	286.4	297.6	256.9	263.8	553.4	511.7	266.4	264.2	233.5	254.1	66.4	64.1	67.0	64.3	230.20	30.25	6966.58
2006/11/17	21:07:00	1208.3	917.1	286.4	297.7	257.0	263.4	554.3	567.5	266.9	264.5	233.6	254.1	67.0	64.8	67.0	64.6	230.20	30.28	6970.46
2006/11/17	21:08:00	1207.6	917.5	286.5	298.3	256.7	263.4	554.5	462.5	267.3	264.2	233.3	254.1	66.8	65.3	67.7	65.0	230.20	30.28	6970.46
2006/11/17	21:09:00	1208.9	918.7	286.4	298.0	256.2	262.7	554.8	559.6	266.5	264.2	233.5	254.2	66.8	64.3	67.0	65.6	230.00	30.26	6959.80

Heat Rise Test
1st Run

Date	Time	TC1	TC2	TC3	TC4	TC5	TC6	TC7	TC8	TC9	TC10	TC11	TC12	TC13	TC14	TC15	TC16	VDC	Amps	Watts
2006/11/17	21:10:00	1208.9	918.4	286.4	297.1	257.2	263.4	554.7	535.7	267.1	264.2	233.4	254.1	66.8	63.8	67.0	64.8	230.20	30.27	6968.15
2006/11/17	21:11:00	1209.1	918.0	286.4	297.8	257.0	263.4	554.6	566.9	266.4	264.2	233.5	254.2	65.5	65.4	66.6	65.3	230.00	30.24	6955.20
2006/11/17	21:12:00	1207.7	920.8	286.7	297.8	257.0	263.7	553.4	505.5	267.1	264.3	233.6	254.2	66.0	65.2	67.7	65.6	229.90	30.25	6957.50
2006/11/17	21:13:00	1207.9	917.2	286.4	298.5	257.0	263.5	553.4	517.2	266.4	264.2	233.6	254.2	66.1	65.0	66.3	64.4	229.80	30.25	6951.45
2006/11/17	21:14:00	1208.4	919.7	286.4	298.6	256.7	263.4	554.3	530.1	266.9	264.5	233.6	254.2	66.4	64.8	66.6	65.3	230.10	30.25	6960.53
2006/11/17	21:15:00	1208.9	917.7	286.4	297.9	257.4	263.4	553.2	481.5	267.0	264.2	233.5	254.2	66.6	64.8	67.6	65.2	230.10	30.27	6967.43
2006/11/17	21:16:00	1208.9	920.4	286.5	298.4	256.9	263.4	555.3	529.4	267.1	264.0	233.5	254.3	66.6	64.6	67.5	64.8	229.50	30.18	6926.31
2006/11/17	21:17:00	1208.9	916.7	286.5	298.5	257.4	263.7	555.4	501.0	267.2	264.2	233.6	254.3	66.3	65.0	67.3	64.8	230.10	30.27	6967.43
2006/11/17	21:18:00	1209.1	916.7	286.4	298.6	256.9	263.5	555.3	552.9	266.7	264.4	233.5	254.3	65.7	65.8	67.2	64.1	229.80	30.27	6956.05
2006/11/17	21:19:00	1208.9	920.0	286.3	298.0	257.9	263.2	555.0	490.9	267.3	264.6	233.4	254.2	65.5	65.4	67.1	65.7	229.80	30.24	6949.15
2006/11/17	21:20:00	1208.4	918.0	286.4	297.8	257.4	263.4	554.9	572.6	266.5	264.5	233.6	254.1	65.1	65.0	67.3	65.6	229.30	30.20	6924.86
2006/11/17	21:21:00	1208.2	919.1	286.5	298.4	256.9	263.4	555.6	627.5	266.9	264.4	233.6	254.2	66.2	65.6	66.6	65.6	229.70	30.22	6941.53
2006/11/17	21:22:00	1208.4	919.9	286.4	297.9	257.2	263.4	554.2	564.6	266.8	264.2	233.5	254.2	65.7	65.4	67.1	65.7	229.80	30.20	6939.96
2006/11/17	21:23:00	1208.7	917.5	286.3	297.9	256.9	263.0	555.1	469.5	266.7	264.0	233.5	254.2	65.6	65.2	67.6	64.0	230.00	30.24	6955.20
2006/11/17	21:24:00	1208.7	917.5	286.4	298.5	256.7	262.4	554.0	458.7	265.6	263.8	233.4	254.2	66.1	64.1	66.6	63.2	230.20	30.27	6968.15
2006/11/17	21:25:00	1209.3	919.3	286.2	297.8	255.9	261.9	554.5	586.2	265.3	263.7	233.4	254.1	66.2	64.3	66.6	62.8	229.60	30.20	6933.92
2006/11/17	21:26:00	1209.3	914.8	286.2	297.4	256.7	262.9	554.5	603.8	266.1	263.8	233.3	254.1	66.6	63.7	66.6	63.1	229.60	30.20	6933.92
2006/11/17	21:27:00	1211.0	913.4	286.4	298.1	258.2	263.2	554.5	579.6	266.5	263.7	233.2	254.1	66.2	64.8	66.8	64.6	230.10	30.26	6962.83
2006/11/17	21:28:00	1208.7	919.1	286.3	298.6	256.7	262.9	553.9	580.9	265.7	263.7	233.3	254.0	66.2	64.6	67.0	63.2	230.00	30.21	6957.36
2006/11/17	21:29:00	1209.0	920.4	286.0	297.5	257.0	262.6	554.2	562.7	265.3	263.7	233.3	254.0	65.5	64.3	66.2	62.8	230.00	30.24	6960.53
2006/11/17	21:30:00	1208.4	920.4	285.9	297.8	256.5	262.2	555.3	562.6	265.2	263.4	233.5	254.0	65.3	63.9	66.6	62.8	230.10	30.27	6967.43
2006/11/17	21:31:00	1208.4	917.7	285.9	297.3	256.7	262.6	553.7	544.6	265.8	263.2	233.2	254.0	66.0	65.1	66.3	62.6	230.10	30.27	6967.43
2006/11/17	21:32:00	1209.0	917.7	286.0	297.8	256.1	262.2	555.4	567.9	265.4	263.7	233.4	254.0	64.8	62.8	65.4	62.4	230.20	30.27	6970.46
2006/11/17	21:33:00	1209.4	917.4	286.2	296.9	256.4	262.9	554.6	594.5	265.2	263.5	233.2	254.1	65.3	63.0	65.6	63.1	230.00	30.19	6943.70
2006/11/17	21:34:00	1208.4	917.6	286.2	298.2	256.2	262.7	554.2	702.6	265.2	263.4	233.3	254.1	65.5	63.9	66.0	62.6	230.20	30.28	6970.46
2006/11/17	21:35:00	1208.4	915.1	285.9	298.6	257.0	263.0	554.2	736.9	265.5	263.7	233.2	254.0	65.7	64.8	66.0	63.0	230.10	30.20	6949.02
2006/11/17	21:36:00	1208.1	918.9	286.4	298.2	257.4	263.4	554.8	726.2	265.9	263.8	233.4	254.0	66.3	65.1	66.8	63.1	230.10	30.26	6965.13
2006/11/17	21:37:00	1208.6	918.0	286.4	298.2	257.5	263.4	554.6	611.6	267.3	264.0	233.2	254.0	66.4	65.1	66.8	64.8	230.00	30.25	6962.10
2006/11/17	21:38:00	1209.0	915.1	286.4	298.6	257.4	262.9	556.0	560.7	266.4	263.7	233.1	254.0	66.4	63.4	66.8	63.7	229.80	30.27	6960.64
2006/11/17	21:39:00	1208.9	917.2	285.7	297.1	256.9	262.7	554.4	567.9	265.8	263.7	233.2	254.0	66.3	63.8	66.4	63.1	230.10	30.26	6962.83
2006/11/17	21:40:00	1207.7	917.4	286.2	297.4	257.2	263.0	554.8	569.5	266.4	263.5	233.4	254.0	66.1	65.0	66.2	63.5	230.10	30.23	6961.97
2006/11/17	21:41:00	1208.0	918.9	286.3	298.6	257.0	262.9	553.9	552.6	267.1	263.9	233.3	254.0	66.6	64.8	67.2	65.1	229.20	30.17	6914.96
2006/11/17	21:42:00	1207.7	918.2	286.2	298.2	256.2	263.2	554.8	479.8	266.9	263.9	233.3	254.0	66.3	65.0	67.3	64.1	230.10	30.26	6967.43
2006/11/17	21:43:00	1208.2	922.6	286.4	297.9	257.2	263.5	555.2	509.6	266.7	264.2	233.3	254.0	66.4	64.6	67.3	65.0	229.90	30.24	6952.18
2006/11/17	21:44:00	1208.3	916.3	286.3	297.6	257.0	262.9	554.0	576.9	266.4	263.7	233.4	254.0	66.6	64.6	67.2	65.0	230.10	30.27	6967.43
2006/11/17	21:45:00	1208.4	919.1	285.9	297.6	257.0	263.4	554.8	560.6	266.2	263.7	233.5	254.0	66.4	64.8	66.8	63.4	229.70	30.21	6939.24
2006/11/17	21:46:00	1210.5	915.1	286.2	297.7	256.7	262.7	554.8	529.9	265.7	263.4	233.5	254.0	65.9	65.5	66.2	62.8	230.00	30.18	6941.40
2006/11/17	21:47:00	1209.4	918.1	286.4	297.8	257.7	263.0	555.7	758.7	266.6	264.0	233.6	254.0	67.3	65.5	66.6	63.7	230.10	30.27	6965.13
2006/11/17	21:48:00	1208.6	917.8	286.3	297.9	257.7	263.7	555.4	671.9	266.0	263.7	233.4	254.1	67.0	64.8	67.3	64.2	230.00	30.26	6959.80
2006/11/17	21:49:00	1208.6	919.4	286.5	297.6	258.2	263.4	555.6	523.2	266.6	263.9	233.5	254.0	66.6	64.8	67.5	64.1	230.20	30.28	6970.46
2006/11/17	21:50:00	1208.3	918.8	286.3	298.1	257.7	263.5	556.1	631.8	267.0	264.2	233.4	254.0	66.3	64.8	67.3	64.8	230.00	30.27	6962.10
2006/11/17	21:51:00	1207.9	918.7	285.9	297.0	257.7	263.2	554.9	599.5	266.1	263.7	233.4	254.1	66.3	64.0	67.0	63.3	230.00	30.27	6962.10
2006/11/17	21:52:00	1208.6	915.5	286.0	297.3	255.7	263.2	555.8	601.1	265.8	263.7	233.5	254.1	65.5	64.4	66.6	63.1	230.20	30.21	6957.36
2006/11/17	21:53:00	1208.4	917.5	286.2	298.3	257.2	263.2	554.9	569.4	265.7	263.7	233.5	254.1	66.0	64.4	66.2	62.6	230.00	30.26	6959.80
2006/11/17	21:54:00	1207.6	916.3	286.2	298.2	256.7	263.4	554.2	601.4	266.0	263.4	233.1	254.1	65.8	64.3	66.2	62.3	230.00	30.26	6959.80
2006/11/17	21:55:00	1208.7	919.6	285.9	297.6	256.5	262.4	554.6	705.3	265.3	263.5	233.4	254.1	65.5	65.8	66.3	62.1	230.10	30.25	6966.58
2006/11/17	21:56:00	1209.0	915.5	286.3	297.6	256.5	262.4	555.3	698.4	265.5	263.4	233.4	254.0	65.4	65.5	65.9	62.2	230.20	30.27	6968.15
2006/11/17	21:57:00	1209.6	917.4	286.2	297.3	256.9	262.9	555.4	650.8	265.5	263.5	233.3	254.0	66.0	63.7	66.6	63.2	230.10	30.27	6965.13
2006/11/17	21:58:00	1208.4	918.5	286.2	297.8	257.0	263.2	555.6	662.1	265.9	263.7	233.2	254.0	65.6	63.3	65.9	62.8	230.20	30.28	6970.46
2006/11/17	21:59:00	1208.0	919.0	285.9	296.6	256.9	262.9	555.6	630.4	265.1	263.4	233.4	254.0	66.2	63.1	65.9	63.3	230.10	30.25	6963.55
2006/11/17	22:00:00	1208.3	920.8	286.2	297.8	256.4	263.2	555.3	678.3	265.4	263.4	233.4	254.1	65.6	64.0	66.8	62.8	230.10	30.27	6965.13
2006/11/17	22:01:00	1208.3	919.6	286.3	298.3	257.4	263.2	553.9	693.3	265.8	263.7	233.5	254.1	65.5	64.1	66.6	62.6	230.00	30.26	6959.80
2006/11/17	22:02:00	1208.2	918.9	285.9	297.8	256.5	263.2	554.2	623.7	265.9	263.7	233.4	254.0	66.0	64.8	66.6	63.4	229.70	30.22	6941.53
2006/11/17	22:03:00	1208.7	918.4	286.5	298.0	257.4	263.4	554.8	662.7	267.0	263.8	233.3	254.0	65.9	65.8	66.6	64.3	230.10	30.20	6952.04
2006/11/17	22:04:00	1208.3	918.1	286.2	298.0	257.7	263.2	555.4	651.1	266.7	263.7	233.3	254.0	66.1	64.6	67.1	64.6	229.90	30.26	6956.77
2006/11/17	22:05:00	1208.9	916.9	286.3	297.5	257.5	263.7	554.2	578.0	266.2	263.7	233.3	254.0	66.0	64.6	66.6	63.6	230.00	30.20	6946.00

Heat Rise Test
1st Run

Date	Time	TC1	TC2	TC3	TC4	TC5	TC6	TC7	TC8	TC9	TC10	TC11	TC12	TC13	TC14	TC15	TC16	VDC	Amps	Watts
2006/11/17	22:06:00	1208.4	915.0	285.9	297.6	257.2	262.9	553.4	616.9	265.5	263.4	233.4	254.1	65.7	64.8	66.4	62.2	229.90	30.26	6956.77
2006/11/17	22:07:00	1207.7	919.4	286.0	297.8	256.9	262.4	552.3	606.1	265.1	263.4	233.5	254.0	65.2	64.6	66.0	62.1	230.10	30.25	6963.55
2006/11/17	22:08:00	1208.7	918.3	286.3	297.7	256.9	263.0	553.5	691.1	266.9	263.2	233.2	254.0	65.5	63.6	66.3	63.0	230.20	30.28	6970.46
2006/11/17	22:09:00	1208.3	915.3	286.5	298.2	257.9	263.4	551.6	609.1	267.1	263.9	233.4	254.0	66.1	64.6	67.2	64.1	230.10	30.27	6967.43
2006/11/17	22:10:00	1209.1	918.1	286.0	297.8	256.2	262.7	553.2	689.1	265.8	263.7	233.5	254.0	65.6	64.3	66.8	63.2	230.20	30.27	6968.15
2006/11/17	22:11:00	1209.0	915.0	285.6	298.3	257.7	262.7	551.1	671.4	265.9	263.7	233.4	254.0	65.5	66.0	66.6	62.0	229.90	30.19	6940.68
2006/11/17	22:12:00	1209.1	917.5	286.4	297.4	256.9	263.4	552.9	617.9	266.8	263.8	233.2	254.0	65.6	64.0	66.6	63.0	229.70	30.24	6946.13
2006/11/17	22:13:00	1208.9	915.8	286.3	298.4	257.4	263.4	551.2	584.6	266.9	264.2	233.3	254.0	65.5	64.3	66.6	64.8	229.90	30.23	6954.47
2006/11/17	22:14:00	1208.9	919.1	286.4	298.3	257.4	263.4	551.2	596.4	266.9	263.8	233.4	254.0	66.0	63.8	66.8	64.1	230.20	30.27	6970.46
2006/11/17	22:15:00	1208.6	918.5	286.5	298.6	257.5	263.4	549.9	612.1	266.2	263.7	233.5	254.0	66.0	64.4	66.8	63.4	230.00	30.25	6957.50
2006/11/17	22:16:00	1208.7	917.4	286.4	297.7	257.7	263.7	550.4	674.1	267.1	264.2	233.4	254.0	66.1	65.2	66.1	63.5	229.90	30.24	6952.18
2006/11/17	22:17:00	1208.4	916.1	286.5	297.9	257.5	263.5	549.7	616.3	266.6	263.9	233.4	254.0	66.2	63.1	66.8	64.0	229.70	30.23	6948.43
2006/11/17	22:18:00	1208.6	918.7	286.4	297.9	256.7	263.8	550.5	617.1	266.8	263.9	233.5	254.1	66.4	63.1	66.4	63.8	230.00	30.24	6959.80
2006/11/17	22:19:00	1208.4	918.5	286.7	297.9	257.7	263.4	549.5	636.6	266.6	263.9	233.4	254.1	66.4	65.5	67.0	63.9	229.40	30.18	6923.29
2006/11/17	22:20:00	1208.4	917.1	286.3	298.6	256.7	263.4	551.2	617.2	265.9	263.5	233.6	254.1	66.0	64.6	66.6	62.8	229.90	30.26	6956.77
2006/11/17	22:21:00	1208.1	918.3	286.4	297.7	257.4	263.4	549.4	577.8	266.9	264.0	233.5	254.1	65.6	65.1	66.3	64.2	229.70	30.16	6930.77
2006/11/17	22:22:00	1208.7	917.1	286.4	296.9	256.5	263.5	550.7	608.3	266.4	264.0	233.4	254.1	65.4	63.0	66.4	64.4	229.60	30.23	6943.10
2006/11/17	22:23:00	1208.6	919.3	286.0	298.8	256.5	263.4	550.8	571.0	266.3	263.8	233.7	254.1	65.5	62.6	66.6	63.4	230.00	30.20	6955.06
2006/11/17	22:24:00	1209.3	920.2	286.5	298.6	256.9	263.7	549.9	570.9	267.4	264.2	233.6	254.2	66.0	65.8	66.6	64.0	229.70	30.18	6932.35
2006/11/17	22:25:00	1208.6	918.0	286.5	298.6	257.8	263.8	550.2	553.9	266.2	264.2	233.5	254.1	65.9	64.4	66.6	65.2	230.10	30.21	6957.36
2006/11/17	22:26:00	1207.6	918.7	286.4	297.8	257.7	263.8	550.2	547.7	266.4	264.2	233.4	254.1	65.5	63.4	66.4	64.6	229.60	30.24	6943.10
2006/11/17	22:27:00	1208.1	918.8	286.7	298.3	256.9	263.7	550.5	584.6	266.8	264.0	233.2	254.1	65.3	63.8	65.8	64.8	229.30	30.17	6917.98
2006/11/17	22:28:00	1208.6	919.3	286.4	298.0	257.2	263.7	548.8	590.5	266.7	264.2	233.4	254.1	65.8	65.0	66.3	65.1	230.10	30.26	6962.83
2006/11/17	22:29:00	1207.9	918.8	286.7	298.6	257.8	263.7	551.1	569.2	266.9	264.2	233.4	254.0	66.4	65.2	67.0	64.0	229.80	30.25	6951.45
2006/11/17	22:30:00	1207.9	919.1	286.4	298.8	257.4	263.2	549.9	554.8	267.1	264.2	233.3	254.0	66.3	65.3	66.8	64.8	230.10	30.23	6961.97
2006/11/17	22:31:00	1209.4	914.9	286.2	298.1	257.4	263.8	549.5	581.3	266.3	264.2	233.3	254.1	66.1	64.6	66.8	63.7	229.90	30.24	6952.18
2006/11/17	22:32:00	1208.9	917.1	286.3	298.1	256.2	263.2	550.3	687.8	267.0	264.2	233.6	254.1	65.6	63.2	65.8	64.2	230.00	30.26	6959.80
2006/11/17	22:33:00	1207.9	915.6	286.4	297.7	256.9	263.7	550.7	624.9	267.0	263.8	233.5	254.0	66.3	63.6	66.3	64.0	230.20	30.27	6970.46
2006/11/17	22:34:00	1207.7	920.0	286.4	298.6	256.5	263.7	551.0	574.9	266.7	263.5	233.4	254.0	65.3	63.4	66.2	64.2	230.10	30.26	6962.83
2006/11/17	22:35:00	1208.6	916.1	286.5	298.3	257.8	263.4	550.4	654.3	267.1	263.7	233.6	254.0	66.0	64.2	67.1	64.2	229.90	30.24	6952.18
2006/11/17	22:36:00	1207.9	918.7	286.7	298.2	257.9	263.5	551.5	668.8	266.8	263.8	233.5	254.0	65.6	64.4	67.0	64.8	230.20	30.27	6968.15
2006/11/17	22:37:00	1208.4	918.6	286.5	298.6	256.9	263.9	551.6	639.5	266.5	263.7	233.7	254.1	65.3	65.0	66.8	64.8	230.10	30.27	6965.13
2006/11/17	22:38:00	1208.3	920.8	286.7	297.6	258.2	263.7	552.1	628.6	266.8	263.7	233.6	254.1	65.6	64.0	66.3	64.2	230.20	30.27	6968.15
2006/11/17	22:39:00	1207.7	917.2	286.7	297.5	257.7	263.7	551.0	581.8	266.8	263.8	233.5	254.1	66.0	64.0	66.6	64.2	229.70	30.21	6939.24
2006/11/17	22:40:00	1208.4	915.9	286.7	299.0	258.2	263.5	551.3	600.1	266.8	263.8	233.5	254.1	65.6	64.8	66.8	63.7	230.10	30.25	6962.83
2006/11/17	22:41:00	1208.2	918.8	286.7	298.8	257.9	263.8	550.2	556.7	267.2	263.7	233.5	254.1	65.6	65.1	66.4	64.4	230.10	30.22	6962.69
2006/11/17	22:42:00	1207.6	915.5	286.5	298.6	257.8	263.8	550.2	577.8	266.6	263.7	233.6	254.1	66.1	64.6	66.6	64.1	230.20	30.27	6968.15
2006/11/17	22:43:00	1208.2	917.8	286.5	299.0	257.4	263.2	551.3	519.5	266.7	263.7	233.6	254.1	65.5	64.2	66.6	63.8	230.20	30.27	6970.46
2006/11/17	22:44:00	1208.1	919.4	286.5	297.9	257.4	263.4	550.4	568.7	267.1	264.2	233.4	254.1	64.6	63.7	67.0	64.4	230.10	30.26	6965.13
2006/11/17	22:45:00	1208.4	918.9	286.7	298.2	256.7	263.5	551.2	561.7	266.4	263.8	233.6	254.1	65.5	63.5	66.6	62.8	229.90	30.25	6954.47
2006/11/17	22:46:00	1208.0	918.8	286.7	298.6	257.4	263.4	551.8	524.3	267.0	263.9	233.5	254.1	65.2	64.2	66.6	63.3	230.10	30.27	6965.13
2006/11/17	22:47:00	1208.0	917.1	286.2	297.6	257.4	263.7	550.0	574.9	266.9	263.9	233.4	254.1	65.8	65.4	66.1	64.0	230.20	30.27	6968.15
2006/11/17	22:48:00	1208.2	917.7	286.5	297.4	256.9	263.7	551.1	627.9	267.1	263.7	233.1	254.1	66.1	65.4	66.0	63.9	230.10	30.27	6967.43
2006/11/17	22:49:00	1208.7	918.3	286.3	297.7	257.2	263.0	551.5	584.6	266.6	263.9	233.4	254.1	65.0	64.8	66.4	63.2	230.20	30.26	6970.46
2006/11/17	22:50:00	1207.6	919.0	286.5	297.9	257.5	263.2	550.7	582.3	267.4	263.9	233.3	254.1	65.2	65.9	67.0	64.0	230.20	30.26	6965.85
2006/11/17	22:51:00	1207.4	916.4	286.4	298.9	257.4	263.7	551.2	596.6	266.8	264.5	233.3	254.1	65.3	64.2	66.6	64.3	230.20	30.27	6968.15
2006/11/17	22:52:00	1208.4	917.1	286.7	298.1	257.4	263.4	552.4	576.1	267.1	264.0	233.4	254.1	66.1	63.8	66.3	64.1	230.20	30.27	6968.15
2006/11/17	22:53:00	1208.7	915.3	286.5	297.0	256.1	263.7	549.9	582.7	266.7	264.2	233.2	254.1	65.7	65.0	66.3	65.1	230.20	30.27	6970.46
2006/11/17	22:54:00	1209.6	915.7	286.7	297.9	257.5	263.4	551.1	638.9	267.1	264.0	233.4	254.1	65.8	64.6	67.5	64.1	230.10	30.27	6965.13
2006/11/17	22:55:00	1208.3	917.2	286.7	297.5	257.4	263.7	550.8	602.1	266.6	263.9	233.5	254.1	65.9	64.1	66.6	64.4	230.00	30.26	6962.10
2006/11/17	22:56:00	1207.9	919.6	286.7	298.4	257.2	262.7	551.6	614.6	266.9	263.9	233.7	254.1	66.1	64.2	66.8	63.8	229.80	30.26	6956.05
2006/11/17	22:57:00	1208.4	916.7	286.7	298.6	257.4	262.7	551.2	603.1	267.1	263.9	233.8	254.2	65.8	63.6	66.8	63.9	230.10	30.24	6958.22
2006/11/17	22:58:00	1209.3	916.7	286.5	298.1	256.1	263.5	552.4	593.9	266.8	264.0	233.6	254.2	65.7	63.5	66.4	63.3	229.90	30.26	6959.07
2006/11/17	22:59:00	1208.0	918.9	286.5	298.6	256.9	262.6	552.4	619.9	265.8	263.7	233.6	254.1	65.3	63.5	66.2	62.6	230.20	30.27	6968.15
2006/11/17	23:00:00	1208.0	918.7	286.4	298.1	257.0	263.4	552.4	617.9	266.6	263.7	233.6	254.1	65.2	64.1	66.4	63.2	230.00	30.24	6961.25
2006/11/17	23:01:00	1206.9	920.6	286.5	298.4	257.4	263.7	552.2	602.4	267.8	264.7	233.2	254.1	65.1	64.6	66.1	64.6	229.90	30.19	6949.74

Heat Rise Test
1st Run

Date	Time	TC1	TC2	TC3	TC4	TC5	TC6	TC7	TC8	TC9	TC10	TC11	TC12	TC13	TC14	TC15	TC16	VDC	Amps	Watts
2006/11/17	23:02:00	1207.6	919.9	286.7	298.9	257.7	263.7	554.0	606.6	267.2	264.4	233.5	254.1	65.1	64.6	66.6	64.6	230.10	30.26	6962.83
2006/11/17	23:03:00	1207.6	915.9	286.5	298.6	257.0	263.4	551.4	561.4	266.6	263.9	233.3	254.1	65.3	64.0	66.6	64.0	229.20	30.19	6919.55
2006/11/17	23:04:00	1207.2	918.4	286.7	298.6	257.4	263.7	551.9	637.1	266.5	263.7	233.5	254.1	65.5	63.5	66.2	62.8	230.00	30.26	6964.40
2006/11/17	23:05:00	1207.6	918.2	286.4	298.6	256.7	263.7	552.1	547.7	266.6	264.0	233.4	254.1	65.7	64.0	66.2	64.3	229.40	30.18	6923.29
2006/11/17	23:06:00	1208.0	917.1	286.7	298.9	256.9	264.0	551.4	519.4	266.3	264.0	233.4	254.1	66.2	64.2	66.3	65.0	230.10	30.26	6965.13
2006/11/17	23:07:00	1208.1	918.4	286.7	298.0	257.5	263.4	552.7	614.1	266.8	263.8	233.7	254.1	65.8	63.8	65.9	64.4	230.20	30.27	6968.15
2006/11/17	23:08:00	1208.3	917.2	286.7	298.6	257.5	263.4	551.6	596.9	267.0	264.0	233.6	254.2	65.8	64.8	66.1	63.9	230.20	30.28	6970.46
2006/11/17	23:09:00	1208.1	917.7	286.7	298.5	257.0	263.2	551.6	592.1	266.7	263.7	233.5	254.2	65.4	63.4	66.3	63.9	230.20	30.27	6968.15
2006/11/17	23:10:00	1207.9	918.9	286.7	297.6	257.7	263.5	553.4	523.0	266.9	263.5	233.6	254.2	65.8	63.2	66.6	63.9	230.20	30.28	6970.46
2006/11/17	23:11:00	1208.4	915.1	286.5	298.3	256.9	263.4	551.9	567.6	266.9	263.5	233.6	254.1	65.9	64.0	67.0	63.9	230.10	30.26	6962.83
2006/11/17	23:12:00	1207.9	917.4	286.7	297.1	257.4	263.7	553.2	537.3	267.0	263.7	233.3	254.1	65.2	64.1	66.8	64.3	230.10	30.26	6962.83
2006/11/17	23:13:00	1208.0	916.9	286.7	298.2	257.0	263.4	552.7	594.9	266.3	263.8	233.7	254.2	65.3	64.0	66.2	63.0	230.20	30.27	6968.15
2006/11/17	23:14:00	1207.6	916.9	286.7	297.7	256.9	263.4	552.1	586.6	266.3	263.5	233.6	254.2	65.3	64.0	66.2	62.8	230.20	30.27	6968.15
2006/11/17	23:15:00	1208.2	917.4	286.3	298.4	257.7	263.7	551.0	578.2	267.2	263.4	233.5	254.1	65.8	63.7	66.3	63.8	230.20	30.28	6970.46
2006/11/17	23:16:00	1208.2	917.1	286.7	298.6	257.0	263.7	553.1	620.9	267.3	263.7	233.4	254.1	65.6	64.4	66.3	64.4	230.20	30.28	6970.46
2006/11/17	23:17:00	1207.7	917.1	286.5	298.2	257.2	263.2	554.3	610.7	266.5	263.5	233.4	254.1	65.7	64.1	66.2	63.7	230.20	30.28	6970.46
2006/11/17	23:18:00	1207.0	917.1	286.7	298.5	257.7	263.5	552.2	587.1	266.9	263.5	233.5	254.2	65.6	64.0	66.2	63.7	230.20	30.27	6968.15
2006/11/17	23:19:00	1208.6	916.9	286.7	298.4	257.0	263.7	553.4	626.4	266.9	263.8	233.4	254.1	65.0	63.7	66.6	64.2	230.20	30.27	6970.46
2006/11/17	23:20:00	1208.6	915.9	286.8	297.5	256.5	263.7	553.2	682.0	266.4	263.4	233.2	254.2	65.1	63.7	65.6	64.2	230.20	30.27	6970.46
2006/11/17	23:21:00	1209.4	916.0	286.8	297.4	257.0	263.2	553.4	623.5	266.5	263.7	233.6	254.2	65.1	63.8	65.8	63.9	230.20	30.27	6968.15
2006/11/17	23:22:00	1208.4	916.6	286.7	298.0	257.2	263.7	552.4	647.1	266.9	263.9	233.4	254.2	65.1	64.4	65.9	64.8	230.20	30.27	6968.15
2006/11/17	23:23:00	1207.5	915.8	286.8	297.6	257.4	263.7	552.7	590.5	266.4	263.7	233.4	254.2	64.8	63.1	66.1	64.0	230.20	30.27	6968.15
2006/11/17	23:24:00	1208.9	915.8	286.7	298.1	257.7	264.0	552.4	608.1	266.9	263.7	233.5	254.2	64.6	63.4	66.8	63.2	230.20	30.27	6968.15
2006/11/17	23:25:00	1208.4	916.9	286.7	297.0	257.4	263.5	552.4	693.3	266.4	263.5	233.3	254.2	65.5	62.6	66.3	63.4	229.90	30.26	6956.77
2006/11/17	23:26:00	1209.1	917.6	286.5	298.0	256.9	263.7	552.3	624.2	266.8	263.5	233.6	254.2	65.5	62.8	66.6	63.7	230.10	30.28	6967.43
2006/11/17	23:27:00	1208.9	917.4	286.7	298.6	256.5	263.5	552.4	600.3	266.5	263.7	233.5	254.2	66.0	62.8	66.8	64.0	230.20	30.28	6970.46
2006/11/17	23:28:00	1208.9	917.9	286.7	297.8	256.5	263.5	552.4	657.2	266.2	263.4	233.4	254.2	66.0	63.6	66.6	63.3	230.20	30.26	6965.85
2006/11/17	23:29:00	1208.9	917.6	286.8	298.1	256.2	263.4	553.2	649.6	266.8	263.5	233.4	254.2	65.1	63.7	67.1	63.2	230.20	30.27	6968.15
2006/11/17	23:30:00	1209.0	915.9	286.7	298.3	257.0	263.4	553.1	626.8	266.7	263.7	233.4	254.2	65.5	63.7	66.6	63.9	230.20	30.28	6970.46
2006/11/17	23:31:00	1208.2	913.3	286.7	298.3	256.9	263.7	553.4	665.8	266.3	263.2	233.2	254.1	65.0	63.4	65.7	63.3	230.20	30.26	6965.85
2006/11/17	23:32:00	1208.2	916.0	286.7	298.2	256.7	263.5	552.8	652.8	266.5	263.8	233.2	254.1	65.3	63.3	66.1	64.1	230.10	30.27	6967.43
2006/11/17	23:33:00	1207.7	917.4	286.7	297.6	256.5	263.8	552.8	570.4	266.6	263.7	233.5	254.1	65.4	63.6	66.2	63.6	230.20	30.26	6965.85
2006/11/17	23:34:00	1208.2	917.8	286.7	298.0	256.5	263.4	553.7	675.3	266.4	263.2	233.3	254.1	65.9	64.3	66.4	64.0	230.20	30.27	6970.46
2006/11/17	23:35:00	1207.6	914.4	286.8	298.4	256.2	263.4	553.7	659.8	266.2	263.4	233.3	254.1	65.3	65.0	66.1	64.4	229.90	30.23	6949.88
2006/11/17	23:36:00	1208.7	916.0	286.8	296.8	256.9	263.5	551.5	626.4	266.7	263.5	233.3	254.2	64.6	64.3	66.4	64.6	230.20	30.27	6970.46
2006/11/17	23:37:00	1208.4	916.6	286.8	298.4	256.4	263.8	552.4	603.2	266.5	263.4	233.5	254.3	65.0	63.1	66.0	64.1	230.20	30.27	6968.15
2006/11/17	23:38:00	1206.6	917.6	286.8	298.4	256.7	263.7	553.4	561.4	266.8	263.7	233.5	254.3	65.2	63.2	66.0	63.7	229.50	30.20	6930.90
2006/11/17	23:39:00	1207.3	918.4	286.9	298.0	257.9	263.7	553.4	563.4	266.4	263.4	233.4	254.3	65.8	63.7	67.0	63.5	229.80	30.26	6953.75
2006/11/17	23:40:00	1208.0	915.4	287.0	298.3	257.2	263.7	553.4	691.5	267.1	263.5	233.5	254.3	65.5	64.0	66.4	63.8	230.00	30.27	6964.40
2006/11/17	23:41:00	1208.0	917.4	286.9	298.6	256.9	263.7	553.9	591.8	266.3	263.8	233.4	254.3	65.6	64.2	66.8	64.3	230.00	30.27	6962.10
2006/11/17	23:42:00	1207.9	919.4	286.7	298.9	257.7	263.5	553.4	624.1	266.8	263.5	233.4	254.3	65.2	62.4	66.6	63.5	229.80	30.23	6946.85
2006/11/17	23:43:00	1208.6	915.4	286.9	299.1	256.9	263.7	552.3	604.6	266.3	263.4	233.3	254.3	65.6	62.4	66.4	63.5	230.00	30.24	6955.20
2006/11/17	23:44:00	1208.1	918.7	286.9	297.7	257.2	263.7	552.6	622.4	266.5	263.7	233.4	254.3	65.7	63.5	66.4	64.2	229.70	30.22	6946.13
2006/11/17	23:45:00	1208.0	916.6	286.8	297.8	257.7	263.7	552.7	571.9	266.4	263.7	233.2	254.3	65.5	62.6	66.3	63.8	229.90	30.24	6955.20
2006/11/17	23:46:00	1208.3	918.9	286.8	298.3	257.2	263.7	553.7	631.9	266.0	263.4	233.4	254.3	65.0	63.7	65.8	63.5	229.70	30.23	6943.83
2006/11/17	23:47:00	1208.0	917.4	286.9	297.7	257.4	263.7	553.4	555.8	266.7	263.4	233.4	254.2	65.4	63.9	66.3	63.5	229.30	30.18	6922.57
2006/11/17	23:48:00	1209.7	917.2	286.9	298.4	256.7	263.4	553.9	602.0	266.3	263.5	233.4	254.2	65.4	63.1	66.3	62.8	229.60	30.19	6933.92
2006/11/17	23:49:00	1208.1	918.7	286.9	297.5	258.0	263.7	552.0	674.6	266.4	263.4	233.2	254.2	65.2	64.0	66.3	63.1	229.60	30.19	6931.62
2006/11/17	23:50:00	1207.4	918.9	286.8	297.9	257.2	263.5	553.7	589.1	266.8	263.7	233.4	254.3	64.6	63.5	66.0	63.7	229.50	30.18	6926.31
2006/11/17	23:51:00	1207.5	913.7	286.9	297.2	257.2	263.4	552.9	576.6	266.1	263.2	233.2	254.3	64.8	63.2	66.8	64.0	230.00	30.24	6958.22
2006/11/17	23:52:00	1208.4	914.8	286.9	297.6	257.5	263.2	552.0	711.2	266.8	263.7	233.3	254.3	65.0	63.4	66.4	64.1	229.40	30.23	6934.76
2006/11/17	23:53:00	1208.2	917.9	286.9	298.6	257.7	263.7	553.9	588.9	266.3	263.5	233.4	254.3	65.3	63.5	66.3	63.0	230.00	30.25	6959.80
2006/11/17	23:54:00	1207.7	917.6	286.7	298.0	256.5	263.7	552.9	609.1	266.3	263.4	233.5	254.3	64.6	64.8	66.2	62.6	229.90	30.25	6959.07
2006/11/17	23:55:00	1208.0	917.1	286.9	298.3	256.9	263.4	553.7	604.7	266.0	263.2	233.4	254.3	65.0	63.1	66.1	63.0	230.20	30.27	6968.15
2006/11/17	23:56:00	1208.6	917.1	286.9	298.0	257.4	263.7	552.4	656.1	266.4	263.2	233.3	254.3	64.8	63.3	65.8	63.1	230.10	30.26	6962.83
2006/11/17	23:57:00	1207.2	916.6	286.9	297.7	257.4	263.2	554.5	626.7	265.9	263.5	233.4	254.3	64.8	62.6	66.0	62.6	230.10	30.27	6965.13

Heat Rise Test
1st Run

Date	Time	TC1	TC2	TC3	TC4	TC5	TC6	TC7	TC8	TC9	TC10	TC11	TC12	TC13	TC14	TC15	TC16	VDC	Amps	Watts
2006/11/17	23:58:00	1207.0	916.4	286.9	297.3	256.9	264.0	553.4	591.3	266.5	263.4	233.2	254.3	65.3	63.3	66.0	63.4	229.50	30.18	6926.31
2006/11/17	23:59:00	1207.2	919.1	286.8	297.6	256.4	263.7	553.9	590.2	265.9	263.4	233.5	254.3	65.4	63.3	66.4	63.9	230.00	30.26	6959.80
2006/11/18	00:00:00	1208.1	918.2	286.9	298.0	256.7	263.5	552.8	636.0	266.0	263.2	233.3	254.3	64.4	62.6	66.2	63.7	230.20	30.24	6961.25
2006/11/18	00:01:00	1208.0	918.6	286.9	297.5	257.2	263.2	552.4	616.9	266.0	263.2	233.4	254.2	65.4	62.6	66.1	62.4	230.20	30.27	6968.15
2006/11/18	00:02:00	1208.4	918.4	286.8	298.3	256.5	263.4	554.3	589.0	266.1	263.2	233.3	254.2	65.1	62.8	66.0	63.3	229.80	30.18	6935.36
2006/11/18	00:03:00	1207.7	918.7	286.9	297.5	256.5	263.4	554.2	562.0	266.3	263.0	233.2	254.3	65.2	63.1	65.8	63.3	229.70	30.21	6939.24
2006/11/18	00:04:00	1208.6	918.1	286.7	297.7	256.4	263.7	553.5	571.2	266.2	263.2	233.2	254.3	64.8	63.0	66.0	62.6	230.00	30.24	6959.80
2006/11/18	00:05:00	1208.2	916.7	286.8	298.3	256.4	263.8	553.4	640.8	265.7	263.4	233.1	254.3	65.6	63.5	66.1	63.5	230.00	30.25	6957.50
2006/11/18	00:06:00	1207.5	919.6	286.8	298.6	256.4	263.7	553.7	627.8	266.6	263.4	233.2	254.2	65.8	63.2	66.3	63.2	230.20	30.27	6968.15
2006/11/18	00:07:00	1207.5	919.1	286.8	298.6	256.5	263.7	554.2	686.1	266.1	263.4	233.1	254.2	65.4	63.0	66.4	63.6	229.50	30.20	6930.90
2006/11/18	00:08:00	1207.5	917.5	286.9	297.4	256.4	263.7	553.7	672.3	266.6	263.2	233.0	254.2	65.1	62.6	66.1	63.6	229.20	30.17	6914.96
2006/11/18	00:09:00	1207.2	919.0	286.7	298.0	256.4	263.2	553.4	642.1	265.7	262.9	233.1	254.2	64.6	63.1	66.2	62.8	229.90	30.22	6950.60
2006/11/18	00:10:00	1206.8	917.7	286.7	298.2	257.4	263.2	554.8	595.1	266.0	262.9	233.1	254.2	65.3	63.3	66.0	62.8	229.50	30.18	6930.90
2006/11/18	00:11:00	1207.6	917.7	286.8	297.4	256.5	263.5	553.5	697.3	266.1	263.0	233.0	254.2	65.0	64.0	65.7	62.1	229.70	30.22	6941.53
2006/11/18	00:12:00	1207.9	917.6	286.4	298.5	256.4	262.9	554.4	566.0	264.6	262.4	233.2	254.2	64.0	62.0	64.8	59.9	230.10	30.25	6963.55
2006/11/18	00:13:00	1208.0	919.0	286.5	298.0	255.7	262.9	553.5	634.4	265.8	262.9	232.9	254.1	63.8	61.1	63.9	61.0	229.60	30.24	6943.10
2006/11/18	00:14:00	1208.3	915.8	286.4	297.8	255.7	262.9	553.4	632.6	265.9	262.9	232.8	254.0	63.5	61.9	64.4	61.3	230.00	30.25	6957.50
2006/11/18	00:15:00	1208.1	915.3	286.2	297.5	256.5	262.9	553.2	590.1	265.5	262.7	232.9	254.0	64.0	62.1	64.8	61.2	230.00	30.26	6959.80
2006/11/18	00:16:00	1207.3	916.1	286.5	297.6	256.4	263.2	553.9	605.4	265.9	262.9	232.9	254.0	64.1	62.4	65.1	62.6	229.00	30.15	6904.35
2006/11/18	00:17:00	1207.4	917.7	286.7	298.0	256.1	263.2	554.3	596.7	265.1	262.7	232.7	254.0	64.3	62.8	65.3	61.7	230.10	30.26	6962.83
2006/11/18	00:18:00	1206.9	918.5	286.7	297.7	256.4	263.2	553.4	521.4	266.0	263.2	232.9	254.0	64.8	62.8	65.0	62.4	230.10	30.26	6965.13
2006/11/18	00:19:00	1207.5	918.7	286.7	296.9	256.4	263.2	554.9	678.8	265.9	262.9	232.9	254.0	65.0	62.6	65.5	62.6	230.10	30.25	6965.13
2006/11/18	00:20:00	1207.9	918.9	286.7	298.3	255.9	263.2	553.9	665.4	266.3	263.4	232.9	254.1	62.8	62.4	64.4	61.8	230.20	30.27	6968.15
2006/11/18	00:21:00	1208.0	913.9	286.7	297.6	256.2	262.7	554.9	655.6	265.4	262.9	233.0	254.2	62.4	61.6	63.9	59.8	230.20	30.26	6968.15
2006/11/18	00:22:00	1207.6	919.6	286.7	297.7	256.4	263.4	555.5	689.4	265.4	263.2	233.1	254.2	62.6	62.4	63.9	60.1	230.20	30.27	6968.15
2006/11/18	00:23:00	1208.1	918.5	286.7	298.2	257.2	263.4	554.9	749.2	266.5	263.4	232.9	254.1	63.8	62.6	64.8	62.0	229.50	30.26	6953.85
2006/11/18	00:24:00	1208.6	919.0	286.7	297.5	255.9	263.5	555.1	744.6	266.1	263.2	232.9	254.2	63.2	62.6	65.0	62.4	229.90	30.24	6952.18
2006/11/18	00:25:00	1207.5	918.8	286.8	298.4	257.0	263.4	555.2	613.5	266.3	263.5	233.1	254.2	64.3	63.3	65.3	62.6	230.10	30.27	6967.43
2006/11/18	00:26:00	1207.3	919.4	286.8	297.3	255.9	263.7	555.1	608.6	266.0	263.4	233.0	254.2	64.8	62.4	65.2	62.4	230.00	30.26	6962.83
2006/11/18	00:27:00	1206.9	918.8	286.8	297.3	257.2	263.7	553.2	587.9	266.3	263.4	233.1	254.2	64.3	62.1	65.0	62.4	230.10	30.22	6959.67
2006/11/18	00:28:00	1207.2	918.0	286.7	297.4	256.4	263.7	555.1	631.6	266.1	263.2	233.2	254.2	64.2	63.9	65.6	62.3	230.10	30.26	6965.13
2006/11/18	00:29:00	1207.0	919.6	286.8	297.2	256.4	263.7	553.4	582.9	266.4	263.2	233.2	254.2	65.0	63.3	65.6	62.6	230.00	30.23	6958.95
2006/11/18	00:30:00	1208.6	916.9	286.7	298.0	256.7	263.4	553.9	649.7	266.3	263.0	232.9	254.1	64.0	62.8	65.6	62.8	230.10	30.26	6962.83
2006/11/18	00:31:00	1207.9	920.9	286.8	297.0	257.2	263.5	555.1	724.6	266.1	263.2	233.0	254.1	64.1	62.2	65.5	62.8	230.10	30.26	6962.83
2006/11/18	00:32:00	1207.5	915.2	286.8	297.9	256.5	263.2	552.7	604.9	266.5	263.2	233.0	254.1	64.8	62.6	65.5	62.6	230.20	30.27	6968.15
2006/11/18	00:33:00	1209.6	914.5	286.8	297.2	256.9	263.4	554.2	741.0	265.9	263.2	233.0	254.1	64.6	62.6	65.5	62.6	230.10	30.26	6962.83
2006/11/18	00:34:00	1207.9	915.9	286.7	297.8	256.9	263.7	554.5	683.5	266.5	263.2	232.8	254.1	65.0	63.0	65.4	64.0	230.20	30.26	6968.15
2006/11/18	00:35:00	1206.6	920.1	286.8	298.2	257.2	263.4	554.7	578.1	266.1	263.2	233.0	254.1	64.1	63.2	65.4	62.8	230.20	30.26	6965.85
2006/11/18	00:36:00	1207.3	917.4	286.7	298.6	255.7	263.4	554.3	657.3	266.3	263.2	233.0	254.1	64.0	63.7	65.7	62.6	230.10	30.26	6967.43
2006/11/18	00:37:00	1207.6	917.5	286.8	297.1	256.9	263.5	553.7	569.0	266.2	263.2	233.1	254.2	64.3	63.7	66.0	62.8	230.20	30.27	6968.15
2006/11/18	00:38:00	1207.6	917.7	286.8	298.1	256.1	263.4	554.8	542.2	266.4	263.4	232.9	254.1	64.8	64.0	66.1	63.3	230.20	30.27	6968.15
2006/11/18	00:39:00	1207.4	919.6	286.8	297.6	257.4	263.8	552.8	564.1	266.0	263.7	233.0	254.2	64.6	62.8	65.9	62.6	230.00	30.25	6960.53
2006/11/18	00:40:00	1207.0	916.4	286.8	297.8	256.5	263.8	553.5	640.7	265.2	263.0	233.0	254.2	64.8	62.8	65.8	62.0	230.20	30.27	6970.46
2006/11/18	00:41:00	1207.9	915.6	286.7	298.4	257.4	263.8	553.2	585.7	265.8	263.4	232.9	254.1	65.3	65.1	65.7	62.8	229.60	30.22	6938.51
2006/11/18	00:42:00	1207.2	918.2	286.7	297.8	257.2	263.7	553.4	629.9	266.2	263.4	233.0	254.1	65.4	63.3	66.2	63.8	229.40	30.20	6927.88
2006/11/18	00:43:00	1208.0	917.1	286.9	297.5	257.0	263.7	554.7	650.5	265.7	263.0	233.0	254.1	65.3	63.7	66.2	62.3	230.20	30.27	6968.15
2006/11/18	00:44:00	1208.1	919.1	286.7	297.0	257.2	263.4	553.4	655.3	265.9	263.4	233.1	254.2	65.2	63.8	65.7	61.7	230.10	30.27	6965.13
2006/11/18	00:45:00	1208.0	918.2	286.7	298.2	256.4	263.4	553.5	615.8	266.2	262.9	232.9	254.1	65.4	62.2	65.9	62.6	230.00	30.26	6959.80
2006/11/18	00:46:00	1208.3	917.6	286.8	297.8	256.5	264.0	555.2	572.2	266.1	263.2	232.9	254.2	65.4	62.2	65.4	62.2	229.90	30.26	6956.77
2006/11/18	00:47:00	1207.3	918.9	286.7	298.2	256.4	263.7	554.9	588.7	266.3	263.5	232.9	254.1	64.2	63.3	65.5	63.3	230.00	30.25	6959.80
2006/11/18	00:48:00	1208.2	918.4	286.8	297.8	257.2	263.7	554.8	628.4	266.4	263.4	232.9	254.1	64.4	63.6	66.1	63.0	230.20	30.27	6968.15
2006/11/18	00:49:00	1207.1	918.8	286.5	297.4	257.0	263.5	554.4	570.5	266.6	263.7	232.9	254.1	65.4	63.8	66.4	63.8	230.20	30.27	6968.15
2006/11/18	00:50:00	1206.6	919.3	286.7	297.4	257.0	263.4	555.1	618.7	265.7	263.0	232.9	254.1	65.4	62.3	66.6	62.6	230.20	30.27	6968.15
2006/11/18	00:51:00	1207.7	916.9	286.7	297.9	257.0	263.7	553.4	615.5	265.3	263.2	232.8	254.2	65.4	64.0	66.1	62.3	230.20	30.27	6968.15
2006/11/18	00:52:00	1207.1	918.8	286.8	298.1	257.8	263.7	554.7	561.2	266.2	263.7	232.9	254.2	65.4	63.9	66.6	62.4	230.20	30.27	6968.15
2006/11/18	00:53:00	1207.0	920.0	286.8	298.0	257.4	263.5	553.4	610.5	266.1	263.2	232.9	254.1	65.4	64.1	65.5	62.3	230.20	30.27	6968.15

Heat Rise Test
1st Run

Date	Time	TC1	TC2	TC3	TC4	TC5	TC6	TC7	TC8	TC9	TC10	TC11	TC12	TC13	TC14	TC15	TC16	VDC	Amps	Watts
2006/11/18	00:54:00	1207.1	915.1	286.8	298.2	257.4	263.7	555.2	655.0	265.9	263.4	232.8	254.2	64.8	62.0	65.5	62.8	230.20	30.27	6968.15
2006/11/18	00:55:00	1207.3	914.2	286.8	297.5	257.2	263.7	555.3	581.4	266.3	263.5	232.9	254.2	63.9	63.4	65.9	63.8	230.10	30.27	6965.13
2006/11/18	00:56:00	1206.8	914.9	286.9	298.4	256.7	263.8	554.5	548.9	266.5	263.7	232.9	254.2	65.1	63.5	65.7	63.7	230.20	30.27	6968.15
2006/11/18	00:57:00	1207.2	917.9	286.9	298.1	257.0	263.4	554.3	628.6	266.9	263.7	232.9	254.2	65.4	63.7	66.0	64.2	230.20	30.27	6968.15
2006/11/18	00:58:00	1207.2	917.7	286.8	297.7	256.7	263.4	553.9	576.2	266.6	263.7	233.0	254.2	64.6	63.0	65.9	63.9	230.20	30.26	6968.15
2006/11/18	00:59:00	1207.6	918.3	286.7	297.5	256.1	264.0	554.2	666.9	266.2	263.7	232.9	254.2	64.2	62.4	65.8	63.0	230.10	30.25	6960.53
2006/11/18	01:00:00	1206.6	919.4	286.9	298.3	256.2	263.9	552.9	581.7	265.5	263.7	232.9	254.1	64.6	62.6	65.6	62.4	229.90	30.24	6952.18
2006/11/18	01:01:00	1206.4	919.1	286.8	297.6	256.9	263.7	554.8	646.3	265.5	263.7	232.9	254.2	65.1	63.2	65.7	62.1	230.10	30.26	6965.13
2006/11/18	01:02:00	1207.6	919.0	286.8	297.2	257.2	262.9	555.5	699.4	265.7	263.4	233.0	254.2	64.8	63.3	65.5	61.9	230.00	30.26	6959.80
2006/11/18	01:03:00	1207.6	918.7	286.8	297.8	257.0	263.7	554.2	598.3	266.1	263.4	232.9	254.2	64.8	63.6	65.9	62.1	230.00	30.25	6959.80
2006/11/18	01:04:00	1206.9	918.0	287.0	298.0	257.2	263.7	555.6	596.9	266.3	263.7	232.8	254.1	65.1	64.0	65.8	62.3	229.80	30.19	6943.70
2006/11/18	01:05:00	1206.9	919.4	286.9	297.4	256.5	263.7	553.9	602.0	266.3	263.4	232.9	254.1	65.1	64.2	66.1	63.2	229.50	30.23	6937.79
2006/11/18	01:06:00	1207.3	916.4	286.9	297.1	256.4	263.7	554.5	653.0	266.0	263.5	233.0	254.1	65.2	63.6	65.5	62.3	229.90	30.24	6952.18
2006/11/18	01:07:00	1207.5	916.7	286.8	298.5	256.7	263.7	554.8	560.9	266.2	263.7	232.8	254.1	64.8	63.9	65.5	63.2	230.00	30.25	6962.10
2006/11/18	01:08:00	1207.2	915.6	286.8	298.5	256.4	263.7	554.2	543.0	266.4	263.5	232.8	254.1	64.6	63.8	66.0	63.8	230.10	30.22	6956.64
2006/11/18	01:09:00	1207.1	914.1	286.7	297.1	256.4	263.7	554.4	568.9	266.4	263.5	232.7	254.1	63.3	64.2	65.4	62.6	230.00	30.21	6957.36
2006/11/18	01:10:00	1206.9	914.1	286.8	297.1	256.7	263.7	554.9	549.4	266.5	263.7	232.7	254.1	63.9	63.9	66.2	63.3	229.60	30.25	6945.40
2006/11/18	01:11:00	1206.6	918.2	286.9	297.9	257.0	263.7	554.7	545.4	266.1	263.4	233.0	254.2	65.8	63.9	66.1	62.6	230.00	30.26	6959.80
2006/11/18	01:12:00	1206.6	916.1	287.1	298.3	256.7	263.7	553.2	588.7	266.1	263.4	233.0	254.2	65.5	64.6	65.8	62.6	230.20	30.27	6968.15
2006/11/18	01:13:00	1207.9	914.5	286.7	297.2	257.2	263.0	553.2	546.0	265.7	263.2	233.0	254.2	64.8	64.4	65.8	62.3	229.60	30.26	6947.70
2006/11/18	01:14:00	1208.3	917.4	286.7	297.8	257.2	263.8	555.9	585.2	265.4	263.4	233.0	254.2	65.4	64.0	65.9	63.1	229.50	30.20	6930.90
2006/11/18	01:15:00	1208.6	917.1	286.7	297.4	256.7	263.7	554.6	633.6	265.0	263.2	233.3	254.2	65.2	63.5	65.3	61.6	229.90	30.25	6956.77
2006/11/18	01:16:00	1207.3	918.9	286.5	297.6	257.7	263.4	555.5	595.4	265.9	263.4	233.2	254.1	65.5	63.3	65.6	62.8	230.10	30.25	6960.53
2006/11/18	01:17:00	1207.5	913.9	286.8	298.1	256.4	263.5	555.5	612.4	266.0	263.4	232.8	254.1	65.3	63.0	66.1	62.8	229.00	30.20	6915.80
2006/11/18	01:18:00	1208.2	913.9	286.8	296.8	256.4	263.9	555.3	568.4	265.3	263.4	232.8	254.2	65.2	63.6	65.8	62.0	230.10	30.26	6962.83
2006/11/18	01:19:00	1208.0	916.7	286.9	297.0	256.5	263.4	555.0	585.3	266.3	263.5	233.0	254.1	65.1	64.1	66.0	62.8	230.10	30.26	6962.83
2006/11/18	01:20:00	1207.9	917.1	286.7	298.6	257.2	264.0	555.1	535.3	265.6	263.5	232.9	254.1	64.3	63.9	65.5	63.1	229.30	30.21	6927.15
2006/11/18	01:21:00	1207.6	920.7	286.8	297.5	256.9	263.7	554.6	531.5	265.9	263.4	232.9	254.1	64.6	62.4	65.8	63.4	230.00	30.26	6959.80
2006/11/18	01:22:00	1208.2	916.1	286.7	297.7	256.7	263.2	555.4	523.7	265.0	262.7	232.8	254.1	65.2	62.6	65.8	62.0	230.00	30.23	6952.90
2006/11/18	01:23:00	1207.9	914.8	286.5	298.6	257.0	262.9	555.1	566.3	265.1	263.4	232.8	254.1	64.8	63.0	65.5	61.8	230.00	30.26	6959.80
2006/11/18	01:24:00	1207.7	921.2	286.7	297.8	256.7	263.4	555.5	612.3	265.5	263.4	232.9	254.0	65.1	61.4	65.6	62.4	230.20	30.27	6968.15
2006/11/18	01:25:00	1207.9	915.1	286.2	296.4	256.2	263.4	554.5	613.9	265.8	263.4	233.0	254.2	65.0	63.7	66.3	62.4	230.00	30.26	6959.80
2006/11/18	01:26:00	1207.5	918.9	286.7	299.4	255.9	264.0	554.5	555.7	266.2	263.5	233.1	254.1	64.8	64.8	66.3	62.8	230.00	30.22	6959.67
2006/11/18	01:27:00	1206.9	917.5	286.8	297.2	256.4	264.0	555.3	554.5	266.2	263.2	233.0	254.1	65.6	64.2	66.3	62.8	230.10	30.26	6962.83
2006/11/18	01:28:00	1206.5	918.0	286.9	298.0	256.9	264.2	554.9	570.4	266.6	263.4	233.0	254.1	65.4	64.6	65.9	63.0	230.10	30.26	6962.83
2006/11/18	01:29:00	1206.2	915.6	286.8	298.5	256.7	263.7	553.9	576.1	266.1	263.0	232.7	254.1	64.8	63.9	65.7	63.4	229.80	30.21	6942.26
2006/11/18	01:30:00	1206.2	916.3	286.7	297.5	256.4	263.9	553.4	579.8	265.9	263.4	232.7	254.0	64.6	63.2	64.8	64.0	229.90	30.20	6946.00
2006/11/18	01:31:00	1206.6	916.1	286.8	298.6	256.9	263.9	552.9	540.8	265.8	263.8	232.7	254.0	64.8	62.8	65.6	63.0	229.80	30.23	6946.85
2006/11/18	01:32:00	1206.1	917.9	286.5	297.4	256.9	263.2	555.0	568.1	265.4	263.2	232.9	254.1	65.4	63.4	65.7	62.4	230.10	30.25	6962.83
2006/11/18	01:33:00	1208.4	915.5	286.7	297.5	256.4	263.4	554.3	654.0	265.4	263.2	232.8	254.1	65.0	64.6	65.7	61.9	230.10	30.27	6968.15
2006/11/18	01:34:00	1206.1	918.7	286.9	299.1	257.2	263.4	553.7	614.8	266.2	263.4	232.9	254.1	65.3	64.1	65.7	62.4	230.10	30.26	6965.85
2006/11/18	01:35:00	1207.7	915.7	286.9	297.7	257.0	263.4	554.2	590.7	266.4	263.4	232.9	254.1	65.6	64.1	66.2	63.6	229.90	30.22	6947.58
2006/11/18	01:36:00	1207.6	915.4	286.8	298.2	257.4	263.5	554.4	809.0	266.6	263.5	232.7	254.0	65.5	64.4	65.9	63.8	230.10	30.26	6962.83
2006/11/18	01:37:00	1207.3	918.7	286.8	298.2	257.2	263.4	555.2	584.9	266.2	263.4	232.8	254.0	64.6	63.7	66.2	63.0	229.50	30.16	6930.77
2006/11/18	01:38:00	1207.3	917.9	286.2	297.3	256.1	262.9	554.6	554.2	264.8	263.2	232.9	254.0	64.8	62.8	65.6	61.3	230.20	30.27	6968.15
2006/11/18	01:39:00	1207.3	919.1	286.0	298.0	256.2	263.2	555.5	553.9	265.0	263.0	233.0	254.0	64.4	62.6	65.6	61.3	230.20	30.27	6968.15
2006/11/18	01:40:00	1207.1	917.1	286.7	298.0	256.7	263.7	556.3	561.4	265.8	262.9	232.9	254.0	64.8	65.3	65.3	61.9	230.20	30.27	6968.15
2006/11/18	01:41:00	1207.4	916.3	286.7	297.7	257.0	263.7	555.2	539.7	265.9	263.2	232.8	254.0	65.2	62.6	65.9	62.4	230.20	30.27	6968.15
2006/11/18	01:42:00	1206.9	919.1	286.4	298.4	255.9	263.4	555.2	556.7	264.7	262.9	232.9	254.0	64.4	61.7	65.7	61.3	230.20	30.27	6968.15
2006/11/18	01:43:00	1207.1	917.5	286.4	297.7	256.2	263.4	555.2	572.2	265.3	262.9	232.8	254.0	64.2	62.2	65.0	61.2	230.00	30.26	6962.10
2006/11/18	01:44:00	1207.3	917.7	286.0	298.6	255.9	262.6	554.2	534.2	265.0	262.9	232.9	254.0	64.2	62.6	64.6	61.1	230.20	30.27	6968.15
2006/11/18	01:45:00	1207.1	917.4	286.5	297.3	256.7	263.4	555.1	598.6	265.0	263.4	232.7	253.9	65.3	63.5	65.4	61.9	230.20	30.26	6965.85
2006/11/18	01:46:00	1207.2	917.7	286.7	297.7	256.9	263.9	555.8	614.8	266.4	263.5	232.8	254.0	65.8	63.7	65.9	63.4	230.20	30.27	6968.15
2006/11/18	01:47:00	1205.8	919.3	286.5	297.9	257.5	263.5	554.4	605.6	265.5	262.9	232.8	254.0	65.0	63.7	66.0	61.8	229.60	30.16	6924.74
2006/11/18	01:48:00	1205.9	917.4	286.7	297.1	256.4	263.4	554.0	589.1	266.1	263.2	232.7	254.0	64.8	63.8	65.6	62.6	229.60	30.22	6938.51
2006/11/18	01:49:00	1206.3	916.6	286.7	297.1	257.2	263.7	554.4	557.7	266.1	263.0	232.8	253.9	65.3	63.9	65.5	63.4	230.10	30.24	6960.53

Heat Rise Test
1st Run

Date	Time	TC1	TC2	TC3	TC4	TC5	TC6	TC7	TC8	TC9	TC10	TC11	TC12	TC13	TC14	TC15	TC16	VDC	Amps	Watts
2006/11/18	01:50:00	1206.6	916.6	286.7	296.9	256.9	263.7	555.7	550.7	265.9	263.4	232.7	253.9	65.1	63.3	66.0	62.6	230.10	30.25	6960.53
2006/11/18	01:51:00	1206.5	916.1	286.7	297.4	256.7	263.7	554.2	559.9	266.0	262.9	232.8	254.0	65.3	63.3	65.9	62.4	228.90	30.17	6905.91
2006/11/18	01:52:00	1208.2	915.1	286.7	297.2	256.7	263.8	554.9	595.5	266.3	263.2	232.7	253.8	65.1	64.3	65.6	62.8	230.10	30.26	6965.85
2006/11/18	01:53:00	1206.1	917.7	286.3	298.3	256.7	263.4	554.2	596.9	265.2	263.2	232.8	253.9	64.8	63.5	65.6	61.6	230.10	30.26	6962.83
2006/11/18	01:54:00	1206.8	917.4	286.3	298.2	256.7	262.9	556.0	560.1	265.1	262.9	232.8	253.9	64.4	63.8	65.2	61.5	230.20	30.25	6963.55
2006/11/18	01:55:00	1206.6	915.1	286.3	297.4	256.2	263.4	555.8	510.7	265.0	262.9	232.7	253.9	64.8	62.4	65.4	61.8	229.90	30.25	6954.47
2006/11/18	01:56:00	1207.3	916.4	286.0	296.8	256.2	263.4	556.0	560.1	264.8	262.9	232.8	254.0	64.8	63.4	65.4	61.4	230.10	30.10	6932.03
2006/11/18	01:57:00	1209.0	916.6	286.4	297.9	255.2	263.4	553.5	557.9	265.8	263.4	232.8	253.9	65.0	62.8	65.2	62.4	230.00	30.23	6952.90
2006/11/18	01:58:00	1208.9	916.1	286.7	297.8	256.4	263.7	553.9	591.8	265.6	263.2	232.7	254.0	65.0	62.8	65.2	62.8	230.10	30.27	6965.13
2006/11/18	01:59:00	1207.6	918.3	286.7	298.1	257.2	262.7	554.6	543.3	265.8	263.0	232.8	254.0	65.3	62.4	66.2	62.0	230.20	30.27	6968.15
2006/11/18	02:00:00	1206.6	919.1	286.2	298.2	256.7	263.2	555.2	537.3	265.1	263.0	232.8	254.0	64.6	63.3	65.3	61.1	230.20	30.27	6968.15
2006/11/18	02:01:00	1206.5	917.1	286.4	297.0	256.5	263.5	555.6	526.9	266.1	263.5	232.9	253.9	65.1	63.8	65.3	62.4	230.00	30.23	6952.90
2006/11/18	02:02:00	1207.0	915.5	286.7	298.1	257.2	263.8	556.1	545.1	266.5	263.7	232.7	253.9	65.0	64.6	66.1	63.1	230.00	30.25	6960.53
2006/11/18	02:03:00	1207.0	913.3	286.7	297.7	257.4	263.9	555.4	516.0	266.3	263.4	232.7	253.9	65.0	64.3	65.7	64.2	230.10	30.23	6961.97
2006/11/18	02:04:00	1207.1	914.1	286.7	298.0	257.7	263.7	554.2	583.0	266.4	263.7	232.8	253.9	65.3	63.7	66.2	63.0	230.10	30.26	6962.83
2006/11/18	02:05:00	1206.6	916.9	286.7	298.3	257.5	264.0	554.3	538.8	266.8	263.4	232.6	253.9	65.3	64.3	65.8	63.3	230.10	30.25	6962.83
2006/11/18	02:06:00	1207.7	918.4	286.7	297.9	257.2	263.8	554.0	515.2	266.0	263.7	232.8	253.9	64.8	62.6	65.5	62.8	230.00	30.26	6959.80
2006/11/18	02:07:00	1207.5	917.1	286.5	297.4	257.4	263.7	555.2	517.9	266.1	263.4	232.8	254.0	65.6	62.6	66.2	62.6	230.00	30.20	6952.04
2006/11/18	02:08:00	1207.2	917.6	286.7	297.8	256.7	263.7	554.2	523.2	266.0	263.4	232.9	254.0	65.4	63.6	65.8	62.6	230.10	30.27	6965.13
2006/11/18	02:09:00	1207.6	918.2	286.5	297.0	256.2	263.5	554.5	519.2	265.3	263.0	232.7	254.0	65.3	62.4	65.3	62.4	230.00	30.26	6959.80
2006/11/18	02:10:00	1207.4	917.1	286.5	296.9	256.1	263.4	555.4	479.0	265.2	263.2	232.8	254.0	64.8	61.8	65.9	62.0	229.80	30.25	6959.07
2006/11/18	02:11:00	1206.6	914.5	286.5	298.3	256.4	263.2	556.2	490.3	265.4	263.2	233.0	254.0	64.8	62.1	65.5	61.6	229.80	30.23	6949.15
2006/11/18	02:12:00	1206.3	917.1	286.3	297.3	256.5	263.2	554.8	502.9	265.2	263.4	233.0	254.1	64.3	63.3	65.6	61.6	229.70	30.24	6946.13
2006/11/18	02:13:00	1206.8	917.4	286.7	298.0	256.9	262.9	555.2	497.5	264.9	263.2	233.1	254.0	64.6	63.0	65.4	61.6	229.90	30.16	6933.78
2006/11/18	02:14:00	1207.6	915.8	286.7	297.3	257.4	263.2	554.0	527.8	265.6	263.0	232.8	254.1	64.8	63.1	65.3	63.1	229.50	30.21	6933.20
2006/11/18	02:15:00	1207.0	916.1	286.5	298.4	257.2	263.4	556.1	487.8	266.1	263.2	232.9	254.0	65.5	63.7	66.4	63.1	230.20	30.27	6968.15
2006/11/18	02:16:00	1206.6	917.9	286.8	298.9	257.7	263.5	554.8	471.0	266.7	263.0	232.5	254.0	65.5	64.2	66.2	63.7	230.20	30.27	6968.15
2006/11/18	02:17:00	1206.4	919.6	286.4	297.2	256.5	263.5	556.4	472.2	265.2	263.4	232.9	254.0	65.2	63.8	66.1	61.9	230.20	30.27	6968.15
2006/11/18	02:18:00	1206.2	918.0	285.9	297.4	256.5	263.0	554.3	507.9	265.1	263.2	232.8	254.0	65.2	63.7	65.4	61.9	230.20	30.27	6968.15
2006/11/18	02:19:00	1206.1	918.8	286.2	297.8	256.4	263.7	554.3	465.8	265.2	263.4	232.9	254.0	65.1	63.3	65.4	61.3	230.20	30.27	6968.15
2006/11/18	02:20:00	1206.3	917.1	286.3	298.1	256.9	264.0	555.0	507.9	265.7	263.2	232.9	254.0	65.0	65.1	65.4	61.7	230.20	30.27	6968.15
2006/11/18	02:21:00	1206.1	917.5	286.5	298.6	257.2	263.9	554.4	505.0	266.6	263.2	232.6	253.9	65.5	64.6	66.4	64.0	230.20	30.27	6968.15
2006/11/18	02:22:00	1206.1	916.1	286.7	297.6	257.2	263.4	554.0	486.5	265.9	263.4	232.6	254.0	65.5	62.1	65.6	62.8	230.20	30.27	6968.15
2006/11/18	02:23:00	1206.8	917.4	286.4	298.1	256.9	263.7	554.7	483.0	265.2	263.4	232.9	254.0	65.1	62.1	65.8	61.6	230.20	30.27	6968.15
2006/11/18	02:24:00	1206.5	917.8	286.5	297.2	257.2	263.7	554.4	499.7	266.3	263.4	232.8	254.0	65.0	64.6	65.5	62.3	230.20	30.27	6968.15
2006/11/18	02:25:00	1206.1	917.7	286.5	297.8	257.2	263.9	554.9	448.0	266.5	263.4	232.9	254.0	65.5	64.3	65.7	63.5	230.20	30.27	6970.46
2006/11/18	02:26:00	1206.3	917.2	286.5	297.3	257.2	263.9	557.2	449.5	266.3	263.2	232.7	254.0	65.4	64.2	66.3	62.8	230.20	30.27	6968.15
2006/11/18	02:27:00	1207.3	915.6	286.7	297.5	257.4	263.9	555.5	483.4	266.4	263.7	232.9	254.0	65.6	63.5	66.4	63.4	230.20	30.27	6968.15
2006/11/18	02:28:00	1206.9	917.6	286.5	298.6	256.9	263.7	555.8	443.0	265.2	263.2	233.0	254.0	65.1	62.8	65.4	62.0	230.20	30.26	6965.85
2006/11/18	02:29:00	1206.3	915.8	286.4	297.5	256.4	263.7	553.7	463.4	265.1	263.0	232.9	254.0	65.0	63.4	65.5	62.0	230.20	30.27	6968.15
2006/11/18	02:30:00	1206.1	918.6	286.5	298.1	257.2	263.7	555.3	459.1	265.9	263.0	232.7	254.0	65.5	64.0	65.8	62.6	230.20	30.27	6968.15
2006/11/18	02:31:00	1206.8	913.9	286.5	298.4	256.4	263.9	553.9	450.6	266.4	263.2	232.7	254.0	65.4	64.1	65.9	63.2	230.20	30.27	6968.15
2006/11/18	02:32:00	1206.8	915.0	286.5	297.8	256.4	263.5	555.5	469.6	264.9	263.2	232.8	254.0	65.3	63.6	65.7	62.2	230.20	30.27	6968.15
2006/11/18	02:33:00	1205.9	920.4	286.3	298.1	255.2	263.7	555.1	452.5	265.5	263.2	232.7	254.0	65.2	64.3	65.7	62.1	230.20	30.27	6968.15
2006/11/18	02:34:00	1206.2	915.7	286.5	298.4	255.9	263.7	555.0	451.0	266.1	263.2	232.7	253.9	65.3	63.7	65.5	62.6	230.20	30.27	6968.15
2006/11/18	02:35:00	1206.9	915.4	286.5	298.0	256.9	263.4	555.0	446.3	265.2	263.2	232.7	254.0	65.0	62.4	65.6	61.4	230.20	30.27	6968.15
2006/11/18	02:36:00	1205.9	916.4	286.4	298.1	256.2	263.0	554.9	466.1	265.2	262.9	232.8	254.0	65.0	61.9	65.2	61.2	230.20	30.27	6968.15
2006/11/18	02:37:00	1206.4	918.3	285.9	298.1	256.2	263.2	556.3	461.8	265.0	262.9	232.8	254.0	64.8	63.2	65.4	62.0	230.20	30.27	6968.15
2006/11/18	02:38:00	1206.1	917.4	286.2	297.3	256.4	262.7	554.8	424.7	265.3	262.9	232.8	254.0	65.0	63.0	64.6	61.7	230.20	30.27	6968.15
2006/11/18	02:39:00	1206.6	919.1	286.4	297.8	256.4	263.4	555.7	446.8	265.2	263.0	232.8	253.9	64.8	62.0	65.1	61.7	230.20	30.27	6968.15
2006/11/18	02:40:00	1206.2	916.4	286.4	297.2	256.4	263.2	555.0	449.8	265.0	263.0	232.9	253.9	64.6	61.4	65.2	61.5	230.20	30.27	6968.15
2006/11/18	02:41:00	1206.1	916.6	286.2	297.9	256.4	263.5	552.9	457.0	264.6	262.9	232.6	253.9	64.8	61.3	65.2	61.7	230.20	30.27	6968.15
2006/11/18	02:42:00	1207.0	916.6	285.7	296.7	256.4	263.5	555.9	489.0	264.6	262.9	232.7	253.9	64.6	62.2	65.7	61.6	230.20	30.27	6968.15
2006/11/18	02:43:00	1207.5	915.7	286.7	297.1	257.5	263.2	553.2	458.4	266.2	263.4	232.8	253.9	65.2	63.3	65.9	63.0	230.20	30.27	6968.15
2006/11/18	02:44:00	1206.9	916.4	286.7	297.2	256.9	263.9	555.3	453.8	265.8	262.9	232.7	253.9	65.5	64.0	65.9	62.8	230.20	30.27	6968.15
2006/11/18	02:45:00	1206.8	916.3	286.5	297.6	256.5	264.0	555.0	450.3	265.5	263.2	232.5	253.9	65.5	64.3	65.8	62.2	230.20	30.27	6968.15

Heat Rise Test
1st Run

Date	Time	TC1	TC2	TC3	TC4	TC5	TC6	TC7	TC8	TC9	TC10	TC11	TC12	TC13	TC14	TC15	TC16	VDC	Amps	Watts
2006/11/18	02:46:00	1206.8	915.7	286.2	298.8	255.9	263.9	554.5	473.4	265.2	262.9	232.7	253.9	65.5	63.3	65.5	61.9	230.20	30.27	6968.15
2006/11/18	02:47:00	1207.3	912.5	286.2	297.9	256.2	263.2	555.4	473.4	265.1	262.9	232.7	253.9	64.4	62.3	64.8	61.4	230.20	30.27	6968.15
2006/11/18	02:48:00	1207.9	913.0	286.2	297.4	256.7	263.0	555.1	465.5	265.2	262.9	232.7	253.9	64.0	62.2	65.4	61.7	230.20	30.27	6968.15
2006/11/18	02:49:00	1207.6	917.1	286.0	297.7	256.2	263.4	556.4	537.9	265.5	262.9	232.6	253.9	64.4	62.8	65.5	61.8	230.20	30.27	6968.15
2006/11/18	02:50:00	1207.1	919.1	286.5	296.8	257.2	263.7	553.7	544.1	266.4	262.9	232.7	253.9	65.4	63.6	65.4	63.1	230.20	30.27	6968.15
2006/11/18	02:51:00	1207.1	917.5	286.5	297.3	257.0	263.7	555.2	522.2	265.9	263.2	232.6	253.9	65.5	62.6	66.1	63.2	230.20	30.27	6968.15
2006/11/18	02:52:00	1206.4	918.4	286.5	297.9	257.2	263.7	553.7	447.1	265.9	263.2	232.7	253.9	65.5	63.9	66.2	62.8	229.60	30.21	6936.22
2006/11/18	02:53:00	1207.2	917.1	286.4	298.0	257.2	263.7	554.2	470.2	266.1	262.7	232.7	253.9	65.3	63.4	65.9	63.5	230.20	30.27	6968.15
2006/11/18	02:54:00	1206.6	916.4	286.4	298.5	255.7	262.9	553.9	457.8	264.8	262.6	232.8	253.9	64.2	60.9	65.7	61.1	230.20	30.27	6968.15
2006/11/18	02:55:00	1206.6	916.7	285.9	297.1	255.9	262.6	555.4	464.8	264.8	262.4	232.7	253.9	64.1	61.3	64.8	61.1	230.20	30.27	6968.15
2006/11/18	02:56:00	1207.1	917.5	286.3	297.2	255.6	263.2	554.6	465.3	265.3	262.9	232.9	253.9	65.0	63.4	65.1	61.5	230.10	30.27	6965.13
2006/11/18	02:57:00	1207.3	917.1	286.5	297.7	257.2	264.0	554.3	490.6	266.0	263.0	232.8	253.9	65.4	63.8	65.2	62.6	230.20	30.27	6968.15
2006/11/18	02:58:00	1208.2	914.4	286.2	296.5	256.4	263.5	554.5	474.7	265.1	262.7	232.7	253.8	65.5	64.0	65.7	62.2	230.20	30.27	6968.15
2006/11/18	02:59:00	1206.1	916.9	286.2	297.5	257.2	263.7	555.8	467.5	265.6	262.7	232.8	253.8	65.6	64.2	65.6	61.8	230.20	30.27	6968.15
2006/11/18	03:00:00	1206.1	917.1	286.0	296.7	255.7	262.9	555.2	471.8	265.1	262.7	232.7	253.9	65.8	61.8	65.5	61.6	230.20	30.27	6968.15
2006/11/18	03:01:00	1206.9	914.8	286.2	297.1	256.2	262.9	556.1	463.5	265.4	262.4	232.7	253.8	65.3	62.6	65.3	61.7	230.20	30.27	6968.15
2006/11/18	03:02:00	1206.9	916.3	286.2	297.7	256.4	263.2	555.4	487.1	265.5	262.7	232.8	253.9	64.6	61.7	65.5	62.0	230.20	30.27	6968.15
2006/11/18	03:03:00	1206.6	918.2	286.3	297.6	256.7	262.9	556.1	451.4	265.2	262.7	232.6	253.9	64.6	62.6	65.5	61.2	230.20	30.27	6968.15
2006/11/18	03:04:00	1206.9	917.7	286.4	297.0	257.2	263.2	556.2	479.0	266.5	262.9	232.6	253.8	65.0	64.4	65.6	62.8	230.20	30.27	6968.15
2006/11/18	03:05:00	1206.6	917.4	286.4	297.7	256.7	263.2	554.4	471.2	265.5	263.2	232.5	253.7	64.8	62.3	65.7	62.8	230.20	30.27	6968.15
2006/11/18	03:06:00	1205.9	915.9	286.2	298.2	256.5	263.7	555.6	502.8	264.9	262.7	232.7	253.8	65.2	62.6	65.6	61.8	230.20	30.27	6968.15
2006/11/18	03:07:00	1205.7	916.6	286.2	297.6	256.7	263.8	554.7	449.8	266.1	262.7	232.5	253.7	65.5	64.1	65.5	62.2	230.20	30.27	6968.15
2006/11/18	03:08:00	1207.2	913.6	286.4	297.0	256.9	263.8	555.0	496.1	265.5	262.9	232.6	253.8	65.2	62.6	65.9	62.8	230.20	30.27	6968.15
2006/11/18	03:09:00	1206.8	913.6	285.7	297.8	255.9	262.9	553.7	475.0	264.8	262.6	232.8	253.8	64.1	62.2	65.1	61.2	230.20	30.26	6965.85
2006/11/18	03:10:00	1206.9	913.7	286.2	297.7	255.9	262.7	553.7	514.1	265.0	262.7	232.8	253.8	64.1	63.4	65.1	61.2	230.20	30.27	6968.15
2006/11/18	03:11:00	1206.9	917.2	285.7	297.8	256.2	263.5	554.7	473.3	265.2	262.9	232.9	253.8	65.1	62.8	66.0	62.1	230.20	30.27	6968.15
2006/11/18	03:12:00	1206.2	918.6	285.7	297.9	256.2	262.4	555.8	540.8	265.1	262.7	232.9	253.7	64.6	63.1	65.0	61.3	230.20	30.26	6965.85
2006/11/18	03:13:00	1207.1	916.4	286.0	296.2	255.3	262.9	555.2	489.7	265.0	262.7	232.7	253.7	64.8	61.9	65.3	61.4	230.20	30.27	6968.15
2006/11/18	03:14:00	1206.9	915.8	285.9	298.4	256.2	263.2	555.2	458.5	265.1	262.6	232.7	253.7	64.2	61.9	65.1	61.4	230.20	30.27	6968.15
2006/11/18	03:15:00	1206.2	919.7	286.2	297.5	255.7	263.0	554.9	479.2	265.0	262.7	232.8	253.7	64.6	61.9	65.0	61.3	230.20	30.27	6968.15
2006/11/18	03:16:00	1205.8	918.3	286.2	297.6	256.2	262.4	556.2	473.0	264.9	262.4	232.5	253.7	64.6	61.3	64.8	61.2	230.20	30.27	6968.15
2006/11/18	03:17:00	1205.6	918.1	285.7	297.0	255.7	262.7	555.0	445.7	264.9	262.4	232.5	253.7	64.4	63.7	65.1	61.2	230.20	30.27	6968.15
2006/11/18	03:18:00	1206.8	918.2	286.4	297.2	255.7	264.0	554.3	435.3	264.9	262.7	232.6	253.7	65.3	63.3	65.4	62.1	230.10	30.26	6962.83
2006/11/18	03:19:00	1206.3	917.1	286.2	298.1	255.9	263.7	555.5	452.5	265.0	262.7	232.8	253.7	65.4	62.6	65.7	61.6	230.10	30.26	6962.83
2006/11/18	03:20:00	1206.4	916.6	285.9	297.6	256.2	262.7	556.1	460.0	264.5	262.4	232.7	253.7	63.9	61.2	65.4	61.0	230.10	30.25	6960.53
2006/11/18	03:21:00	1206.3	916.9	286.0	297.3	255.9	262.2	554.9	469.2	264.8	262.4	232.5	253.7	63.9	63.3	64.4	60.6	230.20	30.27	6968.15
2006/11/18	03:22:00	1207.5	913.7	286.2	297.1	255.7	262.6	555.0	470.5	265.1	262.4	232.5	253.6	64.1	62.1	64.8	60.8	230.20	30.27	6968.15
2006/11/18	03:23:00	1206.4	918.7	286.3	296.9	256.5	263.4	555.4	479.1	265.9	262.7	232.4	253.6	64.8	63.2	66.1	62.2	230.20	30.27	6968.15
2006/11/18	03:24:00	1206.3	916.9	286.2	297.6	256.7	263.4	556.2	451.9	265.6	262.7	232.6	253.7	65.0	63.6	65.5	61.9	230.20	30.27	6968.15
2006/11/18	03:25:00	1206.1	916.9	286.3	298.3	256.7	263.5	555.2	446.8	265.2	262.9	232.8	253.6	65.0	62.6	65.3	61.7	230.20	30.27	6968.15
2006/11/18	03:26:00	1205.5	915.0	285.7	297.3	255.7	262.7	555.4	456.5	264.7	262.4	232.7	253.6	63.9	62.1	65.0	60.8	230.20	30.27	6968.15
2006/11/18	03:27:00	1205.5	915.4	285.9	298.1	256.4	262.9	555.3	453.0	264.9	262.4	232.6	253.6	64.6	61.5	65.4	61.1	230.10	30.27	6965.13
2006/11/18	03:28:00	1206.4	917.9	286.2	298.1	256.9	263.4	555.8	468.5	265.2	262.6	232.7	253.6	64.3	62.6	64.2	61.3	230.10	30.26	6962.83
2006/11/18	03:29:00	1206.9	916.4	286.2	297.3	256.5	263.5	554.9	474.7	265.2	262.7	232.6	253.6	65.1	62.4	65.1	62.1	230.20	30.27	6968.15
2006/11/18	03:30:00	1206.6	916.7	286.2	297.9	256.2	263.7	555.6	457.3	265.2	262.4	232.6	253.5	64.8	64.4	65.6	61.6	230.20	30.27	6968.15
2006/11/18	03:31:00	1205.8	915.8	286.2	297.5	256.1	263.5	553.9	485.5	266.1	262.7	232.5	253.5	65.2	63.7	65.4	62.2	230.20	30.27	6968.15
2006/11/18	03:32:00	1205.9	916.6	286.4	297.5	257.0	263.8	554.5	492.0	265.8	262.7	232.5	253.5	64.4	62.6	64.8	62.3	230.20	30.27	6968.15
2006/11/18	03:33:00	1207.6	916.3	285.9	298.0	255.9	263.2	554.5	486.5	265.1	262.4	232.6	253.5	64.4	62.6	64.8	61.8	230.20	30.27	6968.15
2006/11/18	03:34:00	1207.7	918.0	286.2	297.7	256.2	263.4	554.6	468.5	265.4	262.7	232.6	253.6	64.6	63.8	65.3	61.6	230.10	30.26	6962.83
2006/11/18	03:35:00	1207.0	914.7	286.0	297.3	255.7	263.7	554.0	509.3	264.9	262.7	232.7	253.5	63.9	61.0	64.6	61.0	230.00	30.25	6957.50
2006/11/18	03:36:00	1206.1	919.7	286.2	297.3	255.9	263.4	553.9	428.8	265.1	262.4	232.8	253.5	64.0	60.6	64.0	61.0	230.10	30.26	6962.83
2006/11/18	03:37:00	1206.8	916.6	285.9	297.8	256.2	263.4	555.1	477.2	265.1	262.4	232.6	253.5	64.2	61.0	65.0	61.0	230.20	30.27	6968.15
2006/11/18	03:38:00	1207.1	916.4	286.2	297.6	255.9	262.6	555.1	474.8	265.1	262.4	232.5	253.5	63.9	62.1	65.1	60.6	230.10	30.26	6965.13
2006/11/18	03:39:00	1205.9	918.7	285.9	297.9	255.9	263.7	555.2	440.0	265.0	262.6	232.5	253.5	64.0	61.5	65.3	60.8	230.20	30.27	6968.15
2006/11/18	03:40:00	1206.1	918.1	285.7	297.7	256.5	263.2	555.5	449.8	264.7	262.4	232.5	253.5	64.0	63.0	65.3	60.6	230.10	30.26	6962.83
2006/11/18	03:41:00	1207.3	915.7	285.7	296.5	255.9	263.4	553.9	477.1	265.0	262.7	232.5	253.5	63.9	62.2	65.2	60.8	230.20	30.27	6968.15

Heat Rise Test
1st Run

Date	Time	TC1	TC2	TC3	TC4	TC5	TC6	TC7	TC8	TC9	TC10	TC11	TC12	TC13	TC14	TC15	TC16	VDC	Amps	Watts
2006/11/18	03:42:00	1206.9	915.5	285.4	297.4	255.7	262.9	554.8	468.0	264.8	262.4	232.7	253.5	64.6	63.4	64.0	60.6	230.10	30.26	6962.83
2006/11/18	03:43:00	1206.2	912.3	286.2	297.7	256.5	263.7	554.2	444.5	266.0	262.7	232.5	253.5	65.0	63.4	64.8	62.6	230.20	30.26	6965.85
2006/11/18	03:44:00	1205.7	916.4	285.9	297.6	256.2	262.9	555.4	474.1	264.4	262.4	232.6	253.5	64.6	62.4	64.8	61.0	230.10	30.26	6962.83
2006/11/18	03:45:00	1205.9	916.1	285.9	296.9	255.7	262.4	555.0	444.7	265.0	262.4	232.8	253.5	63.3	61.3	64.1	60.6	230.20	30.27	6968.15
2006/11/18	03:46:00	1206.5	915.9	285.6	297.9	256.2	263.4	553.7	453.5	265.3	262.4	232.8	253.6	63.9	61.3	65.3	61.7	230.20	30.27	6968.15
2006/11/18	03:47:00	1206.5	919.1	286.0	297.6	256.4	263.7	554.3	495.5	264.9	262.4	232.6	253.6	64.3	61.8	65.5	61.0	230.20	30.27	6968.15
2006/11/18	03:48:00	1207.1	918.0	285.9	297.7	256.5	263.4	555.4	447.8	265.1	262.4	232.6	253.6	64.0	61.2	65.5	61.1	230.20	30.27	6968.15
2006/11/18	03:49:00	1207.5	917.1	286.0	297.6	256.4	263.4	554.4	466.7	265.0	262.6	232.5	253.6	64.2	63.4	65.4	61.1	230.20	30.27	6968.15
2006/11/18	03:50:00	1206.9	917.6	286.2	296.6	257.2	263.5	554.3	463.5	266.5	262.9	232.5	253.5	65.1	63.5	65.4	62.6	230.20	30.27	6968.15
2006/11/18	03:51:00	1206.6	919.0	286.2	297.4	256.7	262.7	553.7	436.3	265.0	262.7	232.6	253.5	64.6	61.6	65.6	60.9	230.20	30.27	6968.15
2006/11/18	03:52:00	1206.1	914.4	285.4	297.4	255.9	262.4	553.7	443.0	264.9	262.2	232.6	253.5	63.9	61.6	65.0	60.6	230.20	30.26	6965.85
2006/11/18	03:53:00	1205.8	914.4	285.9	297.5	255.7	262.9	553.2	460.3	265.1	262.4	232.5	253.5	64.0	62.6	64.6	61.6	230.20	30.27	6968.15
2006/11/18	03:54:00	1206.8	916.7	286.0	298.2	257.2	263.4	554.6	436.8	266.0	262.7	232.4	253.5	64.6	63.1	64.4	62.4	230.20	30.27	6968.15
2006/11/18	03:55:00	1206.5	916.1	285.7	298.2	256.2	263.2	554.2	444.3	264.6	262.4	232.6	253.5	64.2	62.0	65.2	60.8	230.20	30.27	6968.15
2006/11/18	03:56:00	1206.8	913.1	285.7	297.2	255.6	263.2	555.8	450.3	264.8	262.2	232.6	253.4	64.2	62.4	64.2	60.9	230.20	30.27	6968.15
2006/11/18	03:57:00	1206.1	916.4	285.7	297.7	255.9	263.2	554.8	434.8	265.1	262.6	232.6	253.5	63.9	61.5	64.8	61.3	230.20	30.27	6968.15
2006/11/18	03:58:00	1205.1	916.1	285.7	298.0	256.4	262.9	554.9	439.6	265.4	262.4	232.7	253.5	64.1	63.1	64.6	61.1	230.20	30.27	6968.15
2006/11/18	03:59:00	1205.4	916.6	285.9	298.1	256.1	263.0	554.2	423.5	264.5	262.2	232.5	253.4	64.2	61.2	64.6	61.0	230.20	30.27	6968.15
2006/11/18	04:00:00	1205.7	917.4	285.4	298.1	255.4	262.7	554.4	473.3	265.0	262.4	232.6	253.4	63.9	61.6	64.4	60.8	230.20	30.27	6968.15
2006/11/18	04:01:00	1205.6	916.3	285.4	297.4	256.2	263.2	554.8	472.0	264.5	262.2	232.4	253.4	63.9	62.6	64.8	60.6	230.20	30.27	6968.15
2006/11/18	04:02:00	1206.4	917.6	285.7	298.0	255.7	263.2	554.5	424.8	265.0	262.4	232.5	253.4	63.7	61.9	64.8	60.8	230.20	30.27	6968.15
2006/11/18	04:03:00	1206.4	915.2	285.2	297.7	256.7	263.7	555.0	447.3	266.0	262.7	232.4	253.4	63.8	63.3	65.0	61.4	230.20	30.27	6968.15
2006/11/18	04:04:00	1207.7	912.7	286.2	297.8	256.7	263.2	553.9	454.8	265.6	262.6	232.4	253.4	64.8	62.4	65.2	61.9	230.20	30.27	6968.15
2006/11/18	04:05:00	1206.2	915.0	285.9	297.9	256.7	263.2	553.4	487.6	265.7	262.6	232.6	253.4	64.1	62.8	65.5	61.7	230.20	30.27	6968.15
2006/11/18	04:06:00	1206.1	915.9	285.4	298.1	256.2	263.2	553.9	442.3	264.9	262.6	232.6	253.4	64.0	63.1	65.3	60.9	230.20	30.27	6968.15
2006/11/18	04:07:00	1206.1	915.1	285.9	297.6	256.2	262.9	555.5	452.4	265.0	262.2	232.4	253.3	63.7	63.4	64.4	60.8	230.20	30.27	6968.15
2006/11/18	04:08:00	1206.4	916.7	284.9	297.9	255.7	263.7	553.7	409.3	265.3	262.4	232.4	253.4	63.8	63.5	64.3	61.0	230.20	30.27	6968.15
2006/11/18	04:09:00	1206.9	916.1	286.0	297.4	256.7	262.9	554.2	497.6	265.8	262.7	232.5	253.3	64.6	62.4	65.0	61.8	230.20	30.27	6968.15
2006/11/18	04:10:00	1205.9	916.6	285.9	298.4	255.7	263.4	555.7	503.5	265.1	262.2	232.5	253.3	63.9	62.6	65.1	60.9	230.10	30.26	6962.83
2006/11/18	04:11:00	1205.9	913.3	285.9	298.2	255.6	263.2	552.9	469.6	264.8	261.9	232.3	253.3	63.6	62.4	65.3	60.9	230.20	30.27	6968.15
2006/11/18	04:12:00	1205.8	917.1	285.4	298.0	256.2	262.7	554.7	448.1	265.0	262.2	232.5	253.3	63.7	61.9	64.6	60.1	230.20	30.27	6968.15
2006/11/18	04:13:00	1206.6	916.0	285.9	297.6	255.7	262.7	554.6	413.2	265.3	262.2	232.4	253.3	63.8	61.2	64.3	60.6	230.20	30.27	6968.15
2006/11/18	04:14:00	1207.1	917.7	285.9	297.4	256.4	263.2	555.1	439.9	264.9	262.2	232.3	253.3	63.8	61.6	64.8	61.0	230.20	30.27	6968.15
2006/11/18	04:15:00	1207.1	914.6	285.6	298.5	256.2	262.7	555.0	445.5	264.9	262.4	232.5	253.3	63.6	61.7	64.3	60.4	230.20	30.27	6968.15
2006/11/18	04:16:00	1206.6	917.9	285.9	297.4	256.5	263.2	555.3	457.6	265.7	262.4	232.7	253.3	63.9	62.6	65.0	61.0	230.20	30.27	6968.15
2006/11/18	04:17:00	1206.9	917.5	285.4	297.3	255.9	262.9	554.8	443.8	264.9	262.4	232.7	253.4	63.9	61.9	65.1	61.1	230.20	30.27	6968.15
2006/11/18	04:18:00	1206.6	913.9	285.7	298.1	256.4	263.4	554.7	449.2	265.3	262.7	232.5	253.4	64.2	64.1	64.4	61.3	230.20	30.27	6968.15
2006/11/18	04:19:00	1206.6	916.4	285.7	297.6	256.2	263.7	554.2	445.5	265.3	262.7	232.5	253.4	63.8	61.2	65.1	62.0	230.20	30.27	6968.15
2006/11/18	04:20:00	1206.4	916.6	285.9	296.0	256.1	263.5	553.4	425.5	265.4	262.4	232.4	253.4	64.3	61.0	64.4	61.3	230.20	30.27	6968.15
2006/11/18	04:21:00	1207.1	916.0	285.9	297.4	255.6	263.0	554.9	469.7	264.9	262.6	232.7	253.4	63.5	60.4	64.0	60.8	230.20	30.27	6968.15
2006/11/18	04:22:00	1206.9	915.2	285.4	297.3	256.5	262.9	554.7	431.8	265.0	262.2	232.7	253.4	63.5	61.0	63.9	60.6	230.20	30.27	6968.15
2006/11/18	04:23:00	1206.6	915.0	285.4	297.0	255.4	263.0	552.9	445.8	264.8	262.4	232.6	253.4	63.9	62.0	64.6	60.8	230.20	30.27	6968.15
2006/11/18	04:24:00	1205.8	918.3	285.7	297.6	255.6	263.4	553.2	470.2	264.8	262.2	232.6	253.3	63.5	61.0	64.1	60.8	230.20	30.27	6968.15
2006/11/18	04:25:00	1206.2	915.7	285.1	297.2	256.1	263.0	553.5	438.5	264.9	262.2	232.3	253.3	63.7	60.6	64.2	60.9	230.20	30.27	6968.15
2006/11/18	04:26:00	1206.6	916.0	285.7	297.9	256.4	262.9	555.7	481.2	264.8	262.4	232.6	253.3	63.8	61.7	64.1	60.8	230.20	30.27	6968.15
2006/11/18	04:27:00	1206.4	916.1	285.2	296.7	255.6	262.2	554.2	434.7	264.8	262.2	232.6	253.3	63.5	63.0	64.3	60.4	230.20	30.27	6968.15
2006/11/18	04:28:00	1206.1	917.1	285.9	296.7	256.7	264.0	554.6	440.1	265.7	262.6	232.4	253.3	64.4	63.5	64.8	61.7	230.20	30.27	6968.15
2006/11/18	04:29:00	1206.2	916.4	285.9	297.5	255.3	263.5	554.5	450.5	265.3	262.4	232.3	253.3	64.0	61.3	64.8	61.8	230.20	30.27	6968.15
2006/11/18	04:30:00	1207.5	916.3	285.6	297.3	256.2	262.9	556.1	433.6	264.7	262.4	232.3	253.3	63.6	62.0	64.6	60.6	230.20	30.27	6968.15
2006/11/18	04:31:00	1205.9	916.4	285.9	297.5	256.2	263.2	554.9	428.5	264.9	262.4	232.6	253.3	63.8	62.6	64.6	60.9	230.20	30.27	6968.15
2006/11/18	04:32:00	1205.5	914.9	286.0	298.0	256.7	263.5	552.9	428.5	265.2	262.6	232.6	253.3	63.9	61.9	65.0	60.6	230.20	30.27	6968.15
2006/11/18	04:33:00	1205.5	915.1	286.0	298.0	257.0	263.7	555.4	439.0	265.4	262.4	232.5	253.3	63.7	62.8	64.6	60.6	230.20	30.27	6968.15
2006/11/18	04:34:00	1205.2	918.4	285.9	297.7	255.7	263.4	554.6	443.0	265.2	262.4	232.6	253.3	64.3	62.1	64.8	60.8	230.20	30.27	6968.15
2006/11/18	04:35:00	1205.2	914.9	285.7	297.4	255.9	263.0	554.4	452.5	264.8	262.2	232.5	253.3	63.6	61.8	64.1	60.6	230.20	30.27	6968.15
2006/11/18	04:36:00	1206.6	917.1	285.9	297.4	255.6	263.2	553.2	441.8	264.8	262.4	232.4	253.3	64.0	61.3	64.8	60.8	230.10	30.26	6965.13
2006/11/18	04:37:00	1206.1	913.9	285.6	297.2	255.1	263.0	554.4	442.8	264.8	262.1	232.5	253.2	63.4	61.8	63.9	60.0	230.20	30.27	6968.15

Heat Rise Test
1st Run

Date	Time	TC1	TC2	TC3	TC4	TC5	TC6	TC7	TC8	TC9	TC10	TC11	TC12	TC13	TC14	TC15	TC16	VDC	Amps	Watts
2006/11/18	04:38:00	1205.5	914.9	285.6	297.7	255.7	262.7	555.1	510.4	264.2	262.1	232.5	253.2	63.4	60.4	64.0	60.1	230.20	30.27	6968.15
2006/11/18	04:39:00	1205.9	915.4	285.4	297.4	255.4	261.7	553.9	495.1	264.5	262.2	232.5	253.3	63.3	59.8	63.7	59.4	230.20	30.27	6968.15
2006/11/18	04:40:00	1206.2	916.4	285.6	297.5	255.7	262.4	556.1	507.7	265.1	262.2	232.6	253.3	63.5	60.2	63.8	60.0	230.20	30.27	6968.15
2006/11/18	04:41:00	1206.3	914.8	285.2	297.0	255.9	263.4	554.8	527.3	265.2	262.2	232.4	253.3	64.0	61.6	65.1	60.8	230.20	30.27	6968.15
2006/11/18	04:42:00	1205.9	916.6	285.6	297.9	254.9	263.7	554.7	485.4	264.8	262.2	232.6	253.3	64.4	61.6	64.4	60.6	230.10	30.26	6962.83
2006/11/18	04:43:00	1206.4	916.9	285.7	297.1	255.4	263.7	554.9	457.0	265.3	262.2	232.4	253.2	64.0	61.7	64.4	61.3	230.20	30.26	6968.15
2006/11/18	04:44:00	1206.4	912.8	285.4	297.3	255.7	262.4	554.8	501.8	264.8	261.9	232.2	253.2	63.7	60.4	64.2	60.6	230.20	30.27	6968.15
2006/11/18	04:45:00	1207.6	915.2	285.9	297.3	255.7	263.2	555.0	499.9	265.0	262.2	232.4	253.2	63.5	60.6	64.4	60.4	230.20	30.26	6965.85
2006/11/18	04:46:00	1206.1	917.9	285.6	297.9	256.1	262.9	555.6	464.6	265.0	262.2	232.4	253.2	63.6	61.0	64.2	60.4	230.20	30.27	6968.15
2006/11/18	04:47:00	1206.2	916.4	285.6	296.8	255.7	262.9	555.0	461.0	264.8	261.8	232.3	253.1	63.6	61.4	64.6	60.2	230.20	30.27	6968.15
2006/11/18	04:48:00	1207.9	913.4	284.9	296.7	255.9	262.9	555.5	433.6	264.6	261.7	232.2	253.1	63.3	61.4	63.5	60.0	230.20	30.27	6968.15
2006/11/18	04:49:00	1206.6	917.1	285.6	297.0	256.2	262.9	553.7	520.9	265.7	262.4	232.4	253.1	63.2	61.6	64.6	60.6	230.10	30.27	6965.13
2006/11/18	04:50:00	1205.9	915.7	284.9	297.6	256.1	263.2	555.5	504.7	265.1	262.1	232.3	253.1	63.5	62.0	64.6	60.4	230.20	30.27	6968.15
2006/11/18	04:51:00	1206.5	917.9	285.4	296.9	256.5	263.4	555.0	513.0	265.2	262.2	232.3	253.1	63.9	62.6	64.4	60.9	230.20	30.27	6968.15
2006/11/18	04:52:00	1206.1	915.2	285.7	298.0	256.9	263.4	554.5	494.9	265.3	262.4	232.4	253.1	64.0	62.6	64.8	61.9	230.20	30.27	6968.15
2006/11/18	04:53:00	1206.6	913.9	285.9	296.7	256.7	263.2	553.4	504.8	265.3	262.2	232.3	253.1	64.4	62.6	64.8	61.5	230.20	30.27	6968.15
2006/11/18	04:54:00	1207.3	918.3	284.9	296.9	255.4	262.7	554.8	520.0	264.3	262.1	232.5	253.1	63.9	61.9	64.0	60.4	230.20	30.27	6968.15
2006/11/18	04:55:00	1206.6	916.3	285.7	297.5	256.7	263.4	553.7	426.3	265.0	262.2	232.4	253.1	64.1	61.9	64.2	61.0	230.20	30.27	6968.15
2006/11/18	04:56:00	1205.1	914.7	285.4	297.8	256.4	263.4	554.4	419.8	265.5	262.1	232.3	253.1	64.0	62.8	64.8	61.1	230.20	30.27	6968.15
2006/11/18	04:57:00	1205.4	915.2	285.9	297.4	255.9	263.2	554.3	433.1	265.1	262.2	232.3	253.1	64.3	62.4	64.8	61.4	230.20	30.26	6968.15
2006/11/18	04:58:00	1206.1	915.2	285.7	297.6	256.4	263.4	555.7	459.0	265.3	262.1	232.4	253.2	64.0	61.9	64.8	61.1	230.20	30.27	6968.15
2006/11/18	04:59:00	1206.2	918.4	285.7	296.5	256.5	262.7	555.1	449.3	264.5	261.9	232.4	253.1	64.3	62.2	63.9	60.4	230.20	30.27	6968.15
2006/11/18	05:00:00	1205.9	915.9	285.6	297.6	255.1	263.7	555.0	446.0	265.0	262.1	232.5	253.1	64.0	60.6	64.2	60.2	230.20	30.27	6968.15
2006/11/18	05:01:00	1206.2	915.7	285.4	297.6	255.1	262.4	554.5	522.1	264.4	261.9	232.5	253.1	63.2	60.4	63.2	59.8	230.20	30.27	6968.15
2006/11/18	05:02:00	1207.6	916.9	285.4	296.8	255.9	262.9	555.8	510.9	264.4	261.7	232.2	253.0	63.3	60.6	63.8	60.4	230.20	30.27	6968.15
2006/11/18	05:03:00	1207.0	919.6	285.7	297.4	255.9	263.5	554.2	530.9	265.0	262.2	232.4	253.1	64.0	61.0	63.8	60.6	230.20	30.27	6968.15
2006/11/18	05:04:00	1206.2	915.9	285.2	297.4	255.9	262.9	553.2	502.5	264.6	261.9	232.4	253.1	63.7	60.8	64.3	59.9	230.10	30.27	6965.13
2006/11/18	05:05:00	1206.2	915.6	285.2	297.3	255.3	262.2	554.7	425.5	264.0	261.3	232.3	253.1	62.8	61.2	63.7	59.8	230.10	30.26	6962.83
2006/11/18	05:06:00	1206.2	917.5	284.9	296.9	255.7	262.4	554.0	426.7	264.4	261.9	232.5	253.1	63.2	61.6	63.6	59.8	230.20	30.27	6968.15
2006/11/18	05:07:00	1206.4	915.9	285.4	296.6	255.9	262.9	555.1	515.1	264.3	261.9	232.4	253.1	63.2	61.0	63.7	60.0	230.20	30.27	6968.15
2006/11/18	05:08:00	1206.5	915.7	285.7	296.8	256.2	263.4	555.1	533.7	265.3	261.9	232.2	253.1	63.6	62.3	64.2	61.7	230.20	30.27	6968.15
2006/11/18	05:09:00	1205.9	915.6	285.6	297.6	256.4	263.4	553.2	509.1	264.7	262.1	232.3	253.1	64.2	62.3	64.8	61.0	230.20	30.27	6968.15
2006/11/18	05:10:00	1205.8	915.3	285.2	298.0	255.9	263.2	554.0	474.0	264.7	261.9	232.4	253.1	63.8	62.3	64.1	60.6	230.20	30.27	6968.15
2006/11/18	05:11:00	1206.2	914.6	285.2	296.8	256.4	263.4	554.2	407.5	265.3	261.9	232.2	253.0	63.9	62.4	64.1	60.8	230.20	30.27	6968.15
2006/11/18	05:12:00	1205.9	916.6	285.2	297.2	256.9	263.7	553.9	426.3	265.2	261.9	232.3	253.1	64.1	62.8	64.6	61.6	230.20	30.27	6968.15
2006/11/18	05:13:00	1205.9	917.4	284.9	297.1	256.7	263.2	555.6	510.1	265.2	262.1	232.2	253.1	64.2	63.1	64.6	61.2	230.20	30.27	6968.15
2006/11/18	05:14:00	1205.6	914.8	285.7	297.0	256.7	263.2	554.7	439.5	265.5	262.2	232.2	253.1	63.9	61.6	64.8	61.2	230.20	30.27	6968.15
2006/11/18	05:15:00	1206.4	916.6	285.4	297.1	255.9	263.2	555.1	417.1	264.8	261.9	232.2	253.1	64.0	62.8	64.6	60.4	230.20	30.27	6968.15
2006/11/18	05:16:00	1207.2	917.5	285.1	297.3	256.4	263.4	555.3	450.3	265.2	262.1	232.2	253.0	63.3	63.3	63.8	60.4	230.20	30.27	6968.15
2006/11/18	05:17:00	1205.9	917.5	285.4	297.5	255.6	263.4	552.9	425.6	264.7	262.4	232.3	253.0	63.8	61.2	64.4	60.8	230.20	30.27	6968.15
2006/11/18	05:18:00	1205.8	915.9	285.4	297.0	254.9	263.0	553.7	516.3	264.7	262.1	232.5	253.1	63.5	62.0	63.6	60.1	230.20	30.27	6968.15
2006/11/18	05:19:00	1205.4	917.5	285.6	296.4	255.3	262.7	553.9	482.2	265.5	262.2	232.2	253.0	63.7	60.4	64.0	61.5	230.20	30.27	6968.15
2006/11/18	05:20:00	1205.9	917.4	285.2	297.3	255.6	263.2	553.2	478.2	265.3	262.4	232.1	253.0	63.8	60.4	64.0	61.1	230.20	30.27	6968.15
2006/11/18	05:21:00	1204.8	917.5	285.2	296.2	256.9	263.7	553.7	482.0	265.8	262.2	232.2	253.0	63.9	62.4	64.4	60.9	230.20	30.27	6968.15
2006/11/18	05:22:00	1204.8	916.7	285.7	297.1	255.7	263.4	553.9	439.3	264.7	262.2	232.2	253.0	63.7	61.6	64.4	60.1	230.20	30.27	6968.15
2006/11/18	05:23:00	1205.6	913.4	285.4	297.6	255.7	262.7	554.9	425.2	264.4	262.1	232.3	253.0	63.7	61.3	64.0	60.0	230.10	30.26	6962.83
2006/11/18	05:24:00	1206.2	914.2	285.6	296.9	256.2	263.4	554.5	501.8	265.9	262.2	232.1	253.0	64.2	62.8	64.3	61.5	230.20	30.26	6965.85
2006/11/18	05:25:00	1205.4	914.1	285.7	297.9	256.5	263.4	554.2	410.0	265.9	262.2	232.1	253.1	64.1	62.0	64.4	61.8	230.20	30.27	6968.15
2006/11/18	05:26:00	1205.2	916.3	285.6	297.1	256.2	262.7	554.0	525.1	264.9	262.2	232.5	253.0	64.2	62.0	63.9	60.6	230.20	30.27	6968.15
2006/11/18	05:27:00	1205.5	916.3	285.7	297.6	256.2	263.2	555.1	484.6	265.0	262.1	232.2	253.0	64.0	61.5	64.0	61.3	230.20	30.26	6965.85
2006/11/18	05:28:00	1205.9	916.6	284.9	296.2	256.1	263.0	554.8	446.6	264.7	261.9	232.2	253.0	63.3	60.8	63.8	60.0	230.10	30.27	6965.13
2006/11/18	05:29:00	1204.8	918.4	285.4	297.6	255.4	262.7	556.1	421.0	264.6	261.9	232.6	253.0	63.3	61.2	63.4	60.0	230.20	30.27	6968.15
2006/11/18	05:30:00	1204.8	918.8	285.2	297.8	255.4	262.4	555.2	423.0	264.5	261.6	232.4	253.0	63.1	61.1	63.6	60.0	230.20	30.27	6968.15
2006/11/18	05:31:00	1205.1	916.3	285.4	297.3	255.7	262.2	555.5	417.5	264.5	262.2	232.2	253.1	63.7	63.2	63.5	60.0	230.20	30.27	6968.15
2006/11/18	05:32:00	1204.8	915.5	285.6	297.6	255.7	263.2	554.5	415.0	265.6	262.1	232.3	253.1	63.9	61.3	64.6	61.3	230.20	30.27	6968.15
2006/11/18	05:33:00	1205.5	916.4	285.6	296.4	255.6	263.0	554.2	419.7	264.9	261.9	232.5	253.1	63.4	59.7	64.6	60.0	230.20	30.27	6968.15

Heat Rise Test
1st Run

Date	Time	TC1	TC2	TC3	TC4	TC5	TC6	TC7	TC8	TC9	TC10	TC11	TC12	TC13	TC14	TC15	TC16	VDC	Amps	Watts
2006/11/18	05:34:00	1205.5	918.1	285.4	297.1	256.2	262.9	556.0	453.3	264.8	261.9	232.2	253.1	63.0	60.8	64.3	59.8	230.20	30.27	6968.15
2006/11/18	05:35:00	1205.6	915.5	285.4	297.8	256.7	263.7	555.3	414.5	265.6	261.9	232.0	253.0	63.6	62.4	64.3	61.2	230.20	30.27	6968.15
2006/11/18	05:36:00	1207.6	913.9	285.6	297.6	256.2	263.4	554.8	532.6	265.6	262.4	232.0	253.0	64.3	62.2	64.6	61.3	230.20	30.27	6968.15
2006/11/18	05:37:00	1206.2	917.7	285.1	295.7	256.4	263.0	555.5	469.1	264.9	262.1	232.4	253.1	63.5	61.6	63.8	59.8	230.20	30.27	6968.15
2006/11/18	05:38:00	1205.4	914.5	285.4	297.2	255.9	263.0	554.6	424.4	265.3	262.1	232.2	253.0	63.4	62.0	63.7	60.6	230.20	30.27	6968.15
2006/11/18	05:39:00	1205.8	916.6	285.2	297.3	256.5	263.0	552.9	466.5	265.3	262.1	232.1	253.0	64.0	60.6	64.3	61.2	230.10	30.27	6965.13
2006/11/18	05:40:00	1206.6	915.2	285.2	296.8	255.3	261.7	555.3	503.2	264.4	261.9	232.3	253.0	63.0	61.4	63.6	59.7	230.20	30.27	6968.15
2006/11/18	05:41:00	1205.9	913.0	285.6	297.6	256.2	262.9	554.7	476.6	265.3	262.1	232.3	253.0	63.5	61.4	64.0	60.2	230.20	30.27	6968.15
2006/11/18	05:42:00	1206.5	913.1	285.4	297.6	255.7	263.0	555.9	483.6	264.2	261.8	232.2	252.9	63.0	60.4	63.9	59.3	230.20	30.27	6968.15
2006/11/18	05:43:00	1206.1	914.6	284.7	296.6	255.7	262.7	555.5	478.5	264.4	261.8	232.2	253.0	62.6	61.1	63.9	59.6	230.20	30.26	6965.85
2006/11/18	05:44:00	1205.0	918.5	285.7	296.5	254.9	263.4	554.7	445.0	265.1	261.9	232.3	253.0	63.7	61.3	63.7	59.9	230.20	30.27	6968.15
2006/11/18	05:45:00	1205.2	916.6	285.2	296.6	255.4	262.9	555.6	490.3	264.9	261.9	232.3	253.0	63.4	61.3	63.6	59.5	230.20	30.27	6968.15
2006/11/18	05:46:00	1205.1	917.1	285.1	297.6	255.3	262.7	555.9	422.3	264.5	261.8	232.2	253.0	62.8	61.6	63.6	59.9	230.20	30.27	6968.15
2006/11/18	05:47:00	1204.8	916.7	285.7	297.6	255.9	263.5	555.7	414.3	265.0	262.2	232.2	253.0	63.7	62.3	64.0	60.4	230.20	30.27	6968.15
2006/11/18	05:48:00	1205.5	915.6	285.2	296.8	255.9	262.4	554.8	432.0	264.5	261.7	232.2	253.0	63.2	62.3	63.8	59.9	230.20	30.27	6968.15
2006/11/18	05:49:00	1205.9	915.1	285.7	297.2	256.4	263.2	554.2	502.0	265.2	262.2	232.3	253.0	63.3	62.3	63.9	60.6	230.20	30.27	6968.15
2006/11/18	05:50:00	1205.1	917.2	285.2	297.4	255.6	263.0	553.5	452.0	264.9	261.9	232.2	253.0	63.5	62.8	64.4	59.9	230.20	30.27	6968.15
2006/11/18	05:51:00	1205.1	914.1	285.2	297.5	254.9	262.4	554.6	411.5	263.9	261.9	232.1	252.9	63.5	63.2	63.6	59.8	230.20	30.27	6968.15
2006/11/18	05:52:00	1205.7	916.4	285.4	297.9	256.2	263.2	554.2	442.3	266.1	262.4	232.1	252.9	62.8	62.4	64.3	61.7	230.20	30.26	6965.85
2006/11/18	05:53:00	1205.8	914.1	285.4	297.2	255.7	263.2	554.2	434.5	264.6	262.2	232.2	252.9	63.5	60.9	63.9	59.8	230.20	30.27	6968.15
2006/11/18	05:54:00	1205.7	915.4	284.9	297.9	255.1	262.6	554.9	443.3	264.2	261.9	232.3	252.9	62.4	60.0	63.3	58.8	230.20	30.27	6968.15
2006/11/18	05:55:00	1205.9	916.6	284.8	297.0	254.8	262.4	554.6	481.7	264.4	261.6	232.4	253.0	62.8	61.1	62.6	59.0	230.10	30.27	6965.13
2006/11/18	05:56:00	1205.4	912.5	284.9	297.0	255.4	262.4	554.8	406.9	264.5	261.7	232.2	252.9	63.1	62.6	63.8	59.9	230.10	30.27	6965.13
2006/11/18	05:57:00	1205.6	912.9	285.4	296.9	256.2	263.7	555.0	456.5	264.4	261.9	232.0	252.9	63.5	62.4	64.6	61.3	230.20	30.27	6968.15
2006/11/18	05:58:00	1205.4	916.4	285.4	297.8	256.1	263.4	555.2	452.4	264.9	261.7	232.1	252.9	63.6	61.3	65.0	60.4	230.20	30.27	6968.15
2006/11/18	05:59:00	1205.4	914.4	285.4	297.1	255.6	263.2	556.2	488.1	264.5	261.4	231.9	252.9	63.2	62.0	64.4	59.9	230.10	30.27	6967.43
2006/11/18	06:00:00	1206.3	912.1	285.4	296.7	256.1	262.9	552.8	504.2	265.4	262.1	231.8	252.9	63.3	61.1	64.0	61.4	230.20	30.27	6968.15
2006/11/18	06:01:00	1205.8	916.0	284.9	297.3	255.6	263.0	555.2	464.2	264.8	261.9	232.2	252.9	63.4	60.6	63.7	59.8	230.20	30.26	6965.85
2006/11/18	06:02:00	1205.9	913.1	285.6	297.1	256.5	263.2	556.2	466.8	264.7	262.1	232.3	252.9	63.4	62.6	63.5	59.8	230.20	30.27	6968.15
2006/11/18	06:03:00	1206.1	918.7	284.9	297.3	254.8	263.2	555.2	442.2	264.5	261.4	232.1	252.9	63.4	60.6	64.1	59.8	230.10	30.27	6965.13
2006/11/18	06:04:00	1206.6	916.1	284.8	297.8	255.7	263.2	555.8	446.8	264.4	261.7	232.3	252.9	63.1	60.4	64.1	59.5	230.10	30.26	6965.13
2006/11/18	06:05:00	1205.9	915.0	284.9	298.1	255.4	261.2	554.8	470.2	264.3	261.1	231.9	253.0	62.8	60.0	63.3	59.3	230.10	30.27	6965.13
2006/11/18	06:06:00	1206.9	916.6	284.7	298.3	255.7	262.9	555.9	428.0	264.2	261.4	232.2	252.9	62.6	60.2	64.2	59.2	230.10	30.27	6965.13
2006/11/18	06:07:00	1206.3	914.1	285.2	297.7	255.6	262.2	554.9	426.3	264.3	261.4	232.1	252.9	63.5	62.8	64.2	59.5	230.10	30.27	6965.13
2006/11/18	06:08:00	1205.1	917.1	284.9	298.2	255.6	262.9	554.2	405.3	264.5	261.8	232.1	252.9	63.4	60.0	64.1	60.0	230.10	30.26	6965.85
2006/11/18	06:09:00	1206.2	915.1	284.9	297.2	255.4	262.4	554.4	491.8	264.2	261.3	232.2	252.9	62.8	59.9	63.7	59.7	230.20	30.27	6968.15
2006/11/18	06:10:00	1205.7	916.7	285.2	297.2	256.2	262.6	554.6	459.9	264.2	261.4	232.2	252.9	63.0	61.7	63.9	59.8	230.10	30.26	6965.85
2006/11/18	06:11:00	1205.5	914.1	285.4	297.3	256.7	262.9	555.4	434.0	266.0	262.1	232.0	252.9	63.8	62.3	64.0	61.2	230.20	30.26	6965.85
2006/11/18	06:12:00	1205.5	916.1	285.4	297.3	257.0	263.4	556.1	438.1	265.3	261.9	232.1	252.9	63.7	62.1	64.8	61.4	230.10	30.27	6965.13
2006/11/18	06:13:00	1205.2	918.7	284.9	297.2	256.2	263.2	555.2	422.0	265.3	261.6	232.0	252.9	63.8	60.6	63.7	60.6	230.20	30.26	6965.85
2006/11/18	06:14:00	1205.2	915.4	284.9	297.4	256.4	263.4	554.2	482.7	265.0	261.7	232.1	252.8	63.6	61.0	64.3	60.0	230.20	30.27	6968.15
2006/11/18	06:15:00	1205.9	917.2	285.4	297.5	256.1	263.7	555.3	475.8	265.7	261.9	232.2	252.8	63.9	62.4	64.3	61.3	230.20	30.27	6968.15
2006/11/18	06:16:00	1205.9	916.4	285.2	296.7	256.2	263.4	554.5	425.5	264.0	261.8	232.1	252.9	63.7	61.6	64.1	60.1	230.20	30.27	6968.15
2006/11/18	06:17:00	1205.9	915.4	285.4	297.1	255.3	263.4	554.8	458.4	263.9	261.8	232.0	252.9	63.4	62.3	64.1	60.1	230.10	30.26	6965.13
2006/11/18	06:18:00	1206.4	914.4	285.4	296.7	255.3	262.9	554.2	427.2	265.2	262.1	231.9	252.9	64.1	61.3	64.1	61.8	230.20	30.26	6965.85
2006/11/18	06:19:00	1205.6	916.9	284.9	296.5	255.4	262.4	554.3	459.4	264.4	261.7	232.2	252.9	63.2	61.6	63.8	60.2	230.10	30.26	6965.13
2006/11/18	06:20:00	1205.8	917.1	285.4	297.7	255.7	262.9	553.9	474.8	265.2	261.9	232.3	252.9	63.5	61.1	63.5	60.4	230.20	30.27	6968.15
2006/11/18	06:21:00	1205.5	915.7	285.2	297.2	255.7	263.4	554.8	433.0	264.3	261.8	232.2	252.8	63.1	61.0	64.3	59.8	230.20	30.27	6968.15
2006/11/18	06:22:00	1204.9	914.1	285.4	297.8	256.1	263.4	555.7	442.8	265.3	261.8	232.2	252.8	63.3	62.1	64.2	60.6	230.20	30.27	6968.15
2006/11/18	06:23:00	1204.6	913.4	285.2	296.9	256.2	263.4	555.0	414.0	265.6	261.8	232.0	252.9	63.8	61.0	64.8	61.1	230.20	30.27	6968.15
2006/11/18	06:24:00	1205.1	914.6	284.8	297.1	255.4	263.2	555.9	424.8	264.3	261.7	232.0	252.9	63.6	61.3	64.3	60.0	230.20	30.27	6968.15
2006/11/18	06:25:00	1205.5	915.9	284.8	297.4	255.2	263.2	555.4	415.5	264.4	261.4	232.2	252.9	63.4	61.2	64.0	59.7	230.20	30.27	6968.15
2006/11/18	06:26:00	1205.4	916.6	284.9	296.4	255.7	262.4	554.4	418.9	264.4	261.8	232.1	252.9	63.4	61.3	64.6	60.0	230.20	30.27	6968.15
2006/11/18	06:27:00	1205.8	913.4	284.7	296.4	254.8	262.7	555.2	445.0	264.6	261.7	232.2	252.9	63.7	60.9	64.1	60.1	230.20	30.27	6968.15
2006/11/18	06:28:00	1205.4	917.4	285.2	297.5	255.2	262.7	555.8	470.1	264.5	261.7	232.2	252.9	62.8	60.9	63.6	59.8	230.10	30.27	6965.13
2006/11/18	06:29:00	1205.9	917.4	284.6	297.9	255.9	262.6	553.4	425.5	264.4	261.6	232.2	252.9	62.8	61.3	64.0	60.0	230.20	30.27	6968.15

Heat Rise Test
1st Run

Date	Time	TC1	TC2	TC3	TC4	TC5	TC6	TC7	TC8	TC9	TC10	TC11	TC12	TC13	TC14	TC15	TC16	VDC	Amps	Watts
2006/11/18	06:30:00	1205.4	914.1	285.4	296.2	255.2	262.9	554.5	415.8	264.5	261.7	232.0	252.8	63.7	62.1	63.5	60.0	230.20	30.27	6968.15
2006/11/18	06:31:00	1205.1	915.5	284.8	296.5	255.4	262.9	553.9	406.6	264.2	261.7	232.0	252.8	63.7	60.0	63.6	59.9	230.20	30.27	6968.15
2006/11/18	06:32:00	1204.8	916.6	285.2	297.1	254.9	262.4	554.7	473.4	264.9	261.4	232.0	252.8	63.3	63.3	63.9	60.0	230.20	30.26	6965.85
2006/11/18	06:33:00	1205.6	917.1	284.9	296.2	254.9	263.4	551.7	439.6	265.0	261.9	232.0	252.8	63.1	63.1	64.2	60.9	230.20	30.27	6968.15
2006/11/18	06:34:00	1205.9	916.9	285.2	296.9	254.7	263.0	555.0	405.3	265.4	261.8	231.9	252.8	63.6	62.3	64.0	61.4	230.10	30.26	6962.83
2006/11/18	06:35:00	1205.1	913.6	285.2	296.9	255.6	263.4	554.0	407.7	265.5	261.9	232.0	252.8	64.1	62.6	63.7	60.9	230.20	30.27	6968.15
2006/11/18	06:36:00	1205.8	915.3	285.2	296.4	255.9	263.0	554.8	417.7	265.4	262.4	232.0	252.8	63.5	61.2	64.4	61.6	230.20	30.27	6968.15
2006/11/18	06:37:00	1207.1	914.5	285.2	297.0	255.6	263.2	553.9	459.4	265.0	261.9	232.2	252.8	63.1	61.4	64.6	60.6	230.20	30.27	6968.15
2006/11/18	06:38:00	1208.3	914.8	285.1	296.7	256.2	263.5	554.2	471.6	264.6	261.9	232.3	252.8	63.7	62.8	64.0	60.2	230.10	30.26	6962.83
2006/11/18	06:39:00	1206.1	916.7	285.2	296.4	256.4	263.2	554.0	458.5	265.3	261.9	232.3	252.8	63.8	61.8	64.2	61.1	230.10	30.26	6962.83
2006/11/18	06:40:00	1206.1	915.0	285.2	296.5	255.6	263.4	554.5	508.2	265.5	261.9	232.0	252.8	62.8	61.5	64.8	61.4	230.20	30.27	6968.15
2006/11/18	06:41:00	1205.9	916.1	285.2	296.9	255.9	263.0	554.9	453.3	265.9	262.1	232.0	252.8	64.1	62.8	63.3	61.3	230.20	30.26	6965.85
2006/11/18	06:42:00	1205.7	916.9	284.9	296.7	256.4	263.4	554.4	480.5	266.0	262.2	232.0	252.8	63.3	63.1	64.6	62.0	230.20	30.27	6968.15
2006/11/18	06:43:00	1205.1	913.9	285.2	297.8	255.7	263.4	554.4	444.0	265.7	262.2	232.0	252.7	63.3	62.0	64.4	61.9	230.20	30.27	6968.15
2006/11/18	06:44:00	1205.2	916.3	285.2	296.2	255.9	262.7	554.2	452.8	264.4	261.7	232.2	252.7	63.4	61.7	64.6	59.8	230.20	30.27	6968.15
2006/11/18	06:45:00	1204.9	917.5	285.1	296.9	254.9	262.9	553.2	404.6	264.4	261.7	232.1	252.7	63.1	60.4	63.2	59.8	230.20	30.26	6965.85
2006/11/18	06:46:00	1205.1	915.5	285.1	296.0	255.3	263.2	554.8	413.2	265.6	261.9	232.1	252.7	63.2	62.3	64.6	60.8	230.10	30.27	6965.13
2006/11/18	06:47:00	1204.9	915.0	285.4	296.7	256.4	262.7	554.7	400.1	265.4	261.9	232.1	252.7	63.3	61.6	64.3	61.2	230.20	30.27	6968.15
2006/11/18	06:48:00	1205.1	913.4	284.9	296.8	255.9	262.9	554.4	406.1	264.6	261.4	231.9	252.7	63.6	61.1	64.6	60.1	230.10	30.27	6965.13
2006/11/18	06:49:00	1205.7	914.2	285.1	296.4	254.7	262.9	551.9	451.0	264.5	261.8	232.1	252.7	63.2	64.2	64.4	60.2	230.10	30.11	6931.32
2006/11/18	06:50:00	1205.0	916.6	285.2	295.7	254.8	263.2	554.4	460.0	266.2	262.1	231.9	252.7	63.5	63.6	64.4	62.4	230.20	30.24	6961.25
2006/11/18	06:51:00	1204.1	911.4	285.2	296.7	256.7	262.6	553.1	407.1	266.2	262.2	231.9	252.6	63.3	63.1	65.2	62.6	230.10	30.27	6965.13
2006/11/18	06:52:00	1204.6	917.9	285.4	297.9	254.5	263.4	554.5	430.2	265.1	262.2	231.9	252.7	63.6	62.2	64.6	61.1	229.90	30.23	6949.88
2006/11/18	06:53:00	1205.1	917.6	285.2	297.4	254.0	262.9	554.9	426.3	264.8	261.9	232.1	252.7	63.2	62.6	63.6	60.6	230.20	30.27	6968.15
2006/11/18	06:54:00	1205.0	915.9	285.2	296.4	255.7	263.4	554.9	442.8	265.9	262.2	232.0	252.7	63.0	63.0	64.2	61.7	230.20	30.26	6965.85
2006/11/18	06:55:00	1205.4	914.9	285.4	296.9	256.9	263.4	553.7	454.8	265.8	262.4	232.0	252.8	62.2	61.3	64.1	62.4	230.20	30.27	6968.15
2006/11/18	06:56:00	1205.1	916.1	285.2	297.1	254.8	263.7	553.9	468.9	265.6	262.4	232.0	252.7	62.2	60.9	64.4	61.1	230.20	30.26	6965.85
2006/11/18	06:57:00	1205.0	915.9	285.4	296.7	256.4	263.4	554.7	485.0	265.7	262.1	232.1	252.7	63.6	62.4	64.1	61.1	230.20	30.26	6965.85
2006/11/18	06:58:00	1206.3	915.7	285.4	296.9	255.4	263.4	553.9	460.5	265.5	262.2	232.1	252.7	63.1	62.4	64.6	60.9	230.00	30.26	6959.80
2006/11/18	06:59:00	1206.3	915.8	285.2	296.8	255.4	263.0	553.9	466.5	266.2	262.2	232.0	252.7	63.1	63.3	64.6	61.7	230.00	30.15	6943.55
2006/11/18	07:00:00	1205.9	914.9	285.2	296.7	255.4	263.5	553.4	474.5	265.0	262.4	232.0	252.7	62.6	63.1	64.0	63.1	230.10	30.26	6962.83
2006/11/18	07:01:00	1204.9	915.3	285.2	297.6	254.4	263.4	554.0	519.4	265.3	262.2	232.1	252.6	62.6	61.9	63.8	61.2	230.00	30.25	6957.50
2006/11/18	07:02:00	1204.1	916.1	285.2	297.4	253.6	263.2	554.5	471.5	265.5	262.2	232.1	252.7	62.2	61.5	63.8	61.1	230.10	30.26	6962.83
2006/11/18	07:03:00	1204.1	916.3	285.4	297.5	256.4	263.4	554.3	406.2	265.8	262.1	231.9	252.7	63.8	60.8	64.1	61.9	230.10	30.26	6962.83
2006/11/18	07:04:00	1206.1	916.1	285.2	296.5	254.4	263.4	554.0	400.6	265.6	262.2	232.0	252.7	63.3	62.0	64.2	60.9	230.20	30.26	6965.85
2006/11/18	07:05:00	1205.1	917.7	285.4	297.4	253.4	263.4	552.9	404.9	265.3	261.9	232.2	252.7	63.1	61.9	63.7	60.6	229.80	30.25	6957.50
2006/11/18	07:06:00	1206.5	913.6	285.2	296.8	255.1	263.7	553.7	408.9	265.6	261.9	232.1	252.6	63.1	62.1	63.6	61.7	229.70	30.24	6946.13
2006/11/18	07:07:00	1204.9	918.0	285.4	296.8	255.4	263.5	553.7	458.2	264.4	261.7	232.1	252.6	63.7	61.4	64.0	61.7	230.10	30.26	6962.83
2006/11/18	07:08:00	1206.1	915.3	285.6	296.4	256.1	263.4	554.4	441.5	265.5	261.7	232.0	252.6	63.7	61.7	64.4	61.8	230.20	30.26	6965.85
2006/11/18	07:09:00	1205.4	914.7	285.4	297.7	255.4	263.4	554.3	418.5	265.6	262.1	232.1	252.7	63.2	62.0	64.2	61.8	230.10	30.26	6962.83
2006/11/18	07:10:00	1205.6	915.6	285.4	296.6	254.2	263.4	554.7	420.4	265.9	262.2	231.8	252.7	63.9	62.6	64.8	62.1	230.10	30.26	6962.83
2006/11/18	07:11:00	1206.9	911.7	285.4	296.6	254.3	262.9	552.4	470.0	265.5	262.2	232.0	252.8	63.3	62.6	64.6	62.8	230.10	30.26	6965.13
2006/11/18	07:12:00	1205.9	915.0	285.2	297.4	254.3	263.4	553.5	429.8	265.7	262.6	231.8	252.7	62.6	63.8	63.3	63.6	230.10	30.25	6962.83
2006/11/18	07:13:00	1206.6	915.1	285.4	296.5	254.2	263.4	552.6	446.3	266.3	262.9	231.8	252.7	62.0	64.2	64.3	63.8	230.10	30.25	6960.53
2006/11/18	07:14:00	1204.6	914.4	285.4	296.9	254.7	263.0	553.9	443.3	266.2	263.2	231.8	252.8	63.4	63.5	64.0	63.9	230.10	30.26	6962.83
2006/11/18	07:15:00	1204.5	916.9	285.4	297.3	254.4	263.4	555.5	466.1	265.6	262.7	232.1	252.8	63.9	63.6	64.8	63.1	230.00	30.25	6957.50
2006/11/18	07:16:00	1205.1	916.0	285.4	296.0	254.0	263.2	553.4	449.8	266.4	262.7	231.9	252.8	64.3	62.6	63.9	62.8	230.00	30.25	6959.80
2006/11/18	07:17:00	1206.6	915.4	285.2	296.8	254.5	262.9	553.9	444.3	266.4	262.9	232.1	252.8	62.0	63.0	62.6	62.6	230.00	30.23	6957.50
2006/11/18	07:18:00	1205.1	917.7	285.2	296.9	254.4	263.2	554.3	444.3	266.0	262.6	232.1	252.8	62.6	62.6	62.6	62.0	230.10	30.26	6962.83
2006/11/18	07:19:00	1205.4	914.7	285.4	296.5	254.9	263.2	553.7	448.5	266.7	262.9	231.8	252.7	62.2	63.6	64.8	62.8	230.00	30.24	6961.25
2006/11/18	07:20:00	1206.1	914.8	285.4	296.1	254.7	263.2	553.7	421.2	266.1	263.2	231.9	252.7	62.6	63.0	64.8	61.2	230.00	30.25	6957.50
2006/11/18	07:21:00	1205.4	914.9	285.4	296.4	254.9	262.9	553.9	456.2	266.8	263.4	231.8	252.7	62.8	63.7	64.1	63.6	230.10	30.26	6962.83
2006/11/18	07:22:00	1205.4	916.0	285.2	296.9	255.7	262.9	553.4	421.7	265.1	262.7	231.9	252.8	63.5	61.9	64.1	61.0	230.10	30.25	6962.83
2006/11/18	07:23:00	1204.1	916.1	285.2	297.3	254.1	262.7	553.4	454.5	265.2	262.7	232.4	252.8	63.7	63.7	64.1	60.4	230.00	30.26	6959.80
2006/11/18	07:24:00	1204.0	916.7	285.4	296.5	254.2	263.2	554.6	455.5	266.3	262.9	232.2	252.8	63.8	63.2	64.2	61.6	230.10	30.24	6961.25
2006/11/18	07:25:00	1204.4	916.7	285.6	296.8	255.7	263.2	555.3	426.3	266.2	262.7	232.3	252.8	64.6	62.1	65.1	62.3	230.00	30.25	6959.80

Heat Rise Test
1st Run

Date	Time	TC1	TC2	TC3	TC4	TC5	TC6	TC7	TC8	TC9	TC10	TC11	TC12	TC13	TC14	TC15	TC16	VDC	Amps	Watts
2006/11/18	07:26:00	1205.4	914.4	285.2	297.2	254.3	262.7	554.9	440.6	265.5	262.7	232.3	252.8	63.3	61.7	64.6	61.5	229.90	30.25	6954.47
2006/11/18	07:27:00	1204.5	916.9	285.2	297.8	254.9	262.7	554.3	428.3	264.9	262.6	232.2	252.8	63.7	61.8	64.6	61.5	230.10	30.26	6962.83
2006/11/18	07:28:00	1205.4	915.6	285.1	296.4	255.2	262.9	555.0	454.4	266.0	262.6	232.2	252.8	63.9	61.1	65.0	61.1	230.00	30.23	6952.90
2006/11/18	07:29:00	1205.5	914.5	285.2	296.7	255.1	263.2	554.3	432.6	265.9	262.4	232.1	252.9	63.7	61.9	64.6	61.6	230.10	30.25	6962.83
2006/11/18	07:30:00	1204.9	913.6	285.4	296.8	254.6	263.2	553.4	418.3	266.6	263.2	231.9	252.8	62.8	63.0	64.6	63.6	229.90	30.23	6949.88
2006/11/18	07:31:00	1205.1	912.7	285.6	296.9	255.7	263.4	553.2	452.5	266.3	263.4	232.1	252.9	63.2	62.6	64.6	62.6	229.90	30.23	6949.88
2006/11/18	07:32:00	1205.1	917.4	285.7	297.3	255.1	262.9	555.9	430.1	266.1	262.9	232.4	252.9	63.6	61.9	64.2	62.3	230.00	30.24	6955.20
2006/11/18	07:33:00	1206.2	915.7	285.6	296.5	254.7	263.5	555.0	420.6	265.8	262.7	232.1	252.9	63.8	63.4	64.2	61.5	230.00	30.25	6959.80
2006/11/18	07:34:00	1204.9	914.4	285.2	297.1	254.5	263.4	553.5	465.0	266.3	262.6	232.2	252.9	63.9	63.6	65.1	62.2	229.90	30.25	6957.50
2006/11/18	07:35:00	1205.1	912.0	285.1	296.6	255.9	262.7	554.7	434.6	266.4	262.6	232.2	252.8	64.0	62.3	63.7	62.0	230.00	30.25	6957.50
2006/11/18	07:36:00	1204.9	914.4	285.4	296.9	254.9	263.4	551.9	439.3	265.5	262.4	232.4	252.8	63.9	62.4	64.6	61.2	230.00	30.25	6959.80
2006/11/18	07:37:00	1204.7	913.6	285.4	296.0	254.9	262.7	554.8	448.5	264.6	262.2	232.5	252.7	63.2	62.8	64.0	59.4	229.90	30.23	6952.18
2006/11/18	07:38:00	1205.4	912.4	284.4	296.5	254.1	262.9	553.2	476.9	265.5	261.9	232.4	252.6	62.3	63.0	63.9	59.8	229.90	30.22	6947.58
2006/11/18	07:39:00	1205.0	913.4	285.4	296.7	253.8	262.7	553.2	478.7	265.5	262.2	232.3	252.6	63.3	61.9	63.9	60.9	229.70	30.21	6939.24
2006/11/18	07:40:00	1206.1	913.7	285.2	296.6	254.0	262.7	554.6	464.5	265.2	262.2	232.2	252.5	61.9	62.6	64.2	60.4	230.10	30.22	6953.62
2006/11/18	07:41:00	1205.7	915.4	285.2	296.8	253.6	262.4	554.2	464.5	265.4	262.4	232.3	252.5	62.6	62.6	63.9	60.9	230.20	30.25	6963.55
2006/11/18	07:42:00	1205.2	912.6	285.1	295.9	254.3	262.9	554.5	448.9	266.0	262.4	232.1	252.5	62.6	62.1	64.0	61.6	230.10	30.26	6962.83
2006/11/18	07:43:00	1205.1	912.6	285.4	296.5	254.6	262.7	553.1	417.0	265.8	262.2	232.2	252.5	63.2	61.0	63.6	60.6	229.90	30.24	6955.20
2006/11/18	07:44:00	1205.8	916.1	285.4	295.6	255.4	262.9	555.2	432.2	265.5	262.6	232.3	252.5	63.5	61.9	63.6	61.8	230.00	30.24	6955.20
2006/11/18	07:45:00	1205.1	913.1	285.2	296.0	255.4	263.0	553.7	433.0	265.7	262.4	232.3	252.5	62.6	61.8	64.3	61.2	229.80	30.23	6953.75
2006/11/18	07:46:00	1205.2	913.1	285.1	296.4	254.9	262.7	554.5	408.8	265.2	262.1	232.2	252.5	63.1	61.1	63.6	60.0	230.00	30.22	6959.67
2006/11/18	07:47:00	1205.8	915.4	285.2	296.4	254.1	262.7	554.8	438.8	265.6	262.6	232.2	252.5	62.4	63.1	63.1	61.2	229.50	30.25	6944.67
2006/11/18	07:48:00	1205.1	915.0	285.4	296.1	254.5	262.9	555.8	429.3	265.6	262.4	232.2	252.5	61.9	60.4	63.7	61.7	230.00	30.24	6955.20
2006/11/18	07:49:00	1205.0	913.4	285.2	295.9	254.3	262.4	556.9	430.2	265.7	262.4	232.0	252.5	62.8	62.1	63.9	61.8	229.90	30.21	6945.28
2006/11/18	07:50:00	1205.0	915.0	284.8	295.9	254.5	262.2	556.7	446.3	265.2	262.2	232.1	252.4	63.1	62.4	64.1	60.4	229.90	30.24	6952.18
2006/11/18	07:51:00	1204.6	917.5	285.1	296.5	253.8	262.4	556.6	429.3	265.0	261.9	232.3	252.4	63.0	62.6	63.7	60.2	230.10	30.26	6962.83
2006/11/18	07:52:00	1204.9	915.7	285.1	295.7	254.4	262.2	557.2	442.3	265.9	261.8	232.1	252.4	63.0	62.8	62.6	61.1	230.20	30.23	6961.97
2006/11/18	07:53:00	1204.9	912.7	285.2	296.0	255.1	262.2	557.4	433.4	265.6	261.9	232.1	252.4	63.5	62.1	63.9	61.4	230.10	30.26	6965.13
2006/11/18	07:54:00	1205.5	915.6	285.2	296.7	254.7	263.0	557.9	488.4	265.1	262.1	232.3	252.5	63.6	62.0	63.9	60.6	230.10	30.26	6962.83
2006/11/18	07:55:00	1205.9	916.0	285.4	296.7	255.2	262.7	557.4	443.5	266.0	262.4	232.3	252.6	63.7	61.8	64.6	61.5	229.90	30.23	6952.18
2006/11/18	07:56:00	1205.4	916.0	285.6	296.7	254.9	262.9	557.4	461.7	265.8	262.7	232.5	252.7	63.3	61.9	64.3	61.7	229.80	30.17	6936.08
2006/11/18	07:57:00	1204.8	915.1	285.6	297.5	254.5	262.9	558.2	451.3	266.4	262.7	232.3	252.8	62.8	63.2	63.5	62.8	229.60	30.20	6936.22
2006/11/18	07:58:00	1204.3	915.0	285.7	296.4	255.4	262.9	557.9	425.0	266.2	263.0	232.5	252.9	63.6	60.6	62.6	61.1	230.10	30.25	6962.83
2006/11/18	07:59:00	1205.1	916.6	285.4	295.7	253.6	262.2	559.5	452.0	265.1	261.9	232.4	252.8	60.6	57.7	61.5	57.8	229.70	30.20	6936.94
2006/11/18	08:00:00	1204.4	914.7	285.2	296.4	254.0	261.9	558.4	392.9	264.6	261.9	232.2	252.5	57.4	56.8	59.5	57.4	230.00	30.21	6951.32
2006/11/18	08:01:00	1203.6	916.1	284.4	296.0	253.2	261.3	558.8	402.4	263.4	261.6	232.0	252.2	58.6	53.4	59.2	54.9	229.80	30.23	6946.85
2006/11/18	08:02:00	1204.4	914.6	284.6	295.6	252.7	261.4	556.9	422.9	263.7	260.8	231.8	252.0	58.8	57.1	59.6	56.6	229.60	30.22	6940.81
2006/11/18	08:03:00	1204.1	913.1	284.4	295.2	252.5	261.4	557.1	418.3	264.0	261.2	231.7	251.8	59.3	56.8	59.4	57.1	229.60	30.22	6940.81
2006/11/18	08:04:00	1204.9	914.9	284.4	295.4	252.6	261.6	558.4	447.0	264.7	261.2	231.7	251.8	59.1	59.4	59.4	57.7	229.90	30.23	6952.90
2006/11/18	08:05:00	1204.8	913.7	284.4	295.2	253.9	261.7	557.5	433.8	265.0	261.8	231.8	251.9	60.2	58.9	60.6	58.6	230.00	30.23	6955.92
2006/11/18	08:06:00	1203.8	913.6	284.9	295.6	253.7	261.4	558.8	414.2	264.4	261.3	231.8	252.1	61.1	58.9	61.6	59.1	230.10	30.25	6960.53
2006/11/18	08:07:00	1203.7	914.2	284.6	295.9	253.7	261.6	559.0	432.9	264.6	261.4	232.2	252.2	61.8	59.2	62.8	59.1	230.00	30.24	6955.20