William D (Bill) Peterson
300-year SNF disposal solution
413 Vine Street
Clearfield, Utah 84015
Tel / FAX 801-825-3123
Email paengineers@juno.com

October 5, 2009

UNITED STATES OF AMERICA
NUCLEAR REGULATORY COMMISSION
BEFORE THE ATOMIC AND SAFETY LICENSING BOARD

In the Matter of	)	PETITION FOR ADMISSION
	)	STANDING, TIMING, CONTENTIONS
U.S. DEPARTMENT OF ENERGY	)	
License Applicant Appellant	)	Docket No. 63-001-HLW
v.	)	
	)	(High-Level Waste Repository)
U.S. NUCLEAR REGULATORY	)	license application speculation
COMMISSION, Licensor Appellee	)	
	)	Before the A&SL Board
& v.	)	
	)	ASLBP Nos. 09-876-HLW-CAB01
William D Peterson, 300-year spent nuclear	)	09-877-HLW-CAB02
fuel permanent disposal solution	)	9-878-HLW-CAB03
Third Party License Applicant Appellant	)	09-892-HLW-CAB04

PETITION FOR ADMISSION

By this pleading engineer Peterson tells why he needs to be a party to this matter. Peterson herewith explains his standing, his lateness, and his contentions.

STANDING

Back when the Department of Energy (DOE) was the Office of Coal Research (OCR) Peterson worked with University of Utah Professor Alex Oblad when George Hill went from Dean of Mineral Engineering to the chairman of OCR. For them Engineer Peterson designed and built equipment to successfully convert coal 95% to petroleum in 7 seconds in a churning atmosphere of hydrogen, at 3,000 psi, and 1300 deg F. With his engineering and manufacturing company PEMCO, Peterson did 17 projects at the Idaho National Laboratory relative to the FAST project for disposal of Navy spent nuclear fuel (SNF).

With his company PEMCO Peterson designed and furnished the equipment to move the Vitro uranium tailing from the Salt Lake Valley to Clive, an $80 million EPA remediation project. Even with troubles Peterson's method got the work done one year early, in two years.

In 1987 when the Congress created the office of the Nuclear Waste Negotiator Peterson proposed his Pigeon Spur site in Box Elder County, Utah to Richard Stallings for intermediate storage of SNF. Peterson proposed a system of parallel railroad tracks to service a rectangular matrix of surface accessible SNF storage. He also proposes subsurface convection air-cooled technologies. The designed project was assigned NCR Docket No. 72-23. Peterson prepared and twice submitted an NRC license application, but he was never able to get his project funded, still he has never given up.

As well as in Mechanical Engineering, Peterson had obtained a postgraduate MEA engineering degree in Operations Research Analysis (ORA). It took Peterson 1-1/2 years to contrive an ORA model of the macro economy. From it Peterson proved to himself his long time feeling that America's spiraling deficit was a consequence of its rising out of control imbalance of trade. Seeing oil being the largest deficit item and its production declining, the pollution of coal, and wrongful condemnation of nuclear power Peterson knew his country was fast getting into serious trouble with fuel, climate change, and the economy, and Peterson knew that nuclear-electricity and hydrogen would abe the best fix for all three problems.

Utah politicians did not like Peterson's work to develop SNF intermediate storage. Likewise, Utah would not listen to Peterson's deficit recovery rules. After almost 15 years of work, Peterson was stymied. Peterson spent many sessions with schoolmate Professor of Nuclear Engineering Dr. Gary Sandquist. After much consideration Peterson felt 300 years could be a target for SNF disposal. University of Pittsburgh Professor Bernard Cohen gave advice and information that further confirmed

300 years. Peterson sought and obtained help from retired INL physical chemist Dr. Jerry Christian. He further confirmed the 300 year time in that it coincided with 1000 fold decay of the 30-year half life cesium and strontium that are the near term radiation problems in the fission waste. Dr. Christian developed the 5-9s (99.999%) requirement of the removal of the transuranics from the fission waste to enable them to qualify as low level Class-C in 300 years. INL and Argonne chemists have since demonstrated the 5-9s separation process. Physicist Dr. Steven Barrowes has been along in all of this, writing about it and getting it documented for others to understand. Three patents and another pending have resulted.

So we can say that Peterson has invested work of about ¼ of a century trying to save the U.S. economy for America, his family, and himself. Now hopefully this matter can be seen by a panel of judges who have power to steer the future of nuclear energy in a way that can give America energy independence and a way to build an economy for itself that can work and endure.

Yucca Mountain (YM) was designed for storage of existing SNF and closing down the nuclear power industry. This is not acceptable. Burying unprocessed SNF with its hot cesium and strontium, then having to cool the mountain with 10,000 HP for one hundred years is not acceptable. YM will cost $60 billion to finish. For $30 billion five 300-year SNF type disposal facilities can be built and put into operation. And with another $30 billion processing facilities can be built to do the 5-9s separation.

Two years ago Peterson was invited to talk to DOE about disposal of SNF. Peterson told DOE that $30 billion needs to be expended to build five 300-year SNF storage / disposal facilities. He told DOE that they did not have justification for using funding collected from the utilities, because DOE did not have a solution for SNF. One million years of storage is not comprehendible, not a real goal.

Heating a mountain with decaying Cs and Sr then cooling it for 100 years with 10,000 HP is stupid. Burying 97% of our nuclear fuel is even more stupid. America should be doing the GNEP program. GNEP can't be done with YM type technology. But it can be done with Peterson's 300-year SNF disposal type technology. So Peterson is challenging the reality of YM and one million years of storage. Restrictions of President Carter and the Congress have made it impossible for DOE to achieve an SNF disposal solution. DOE needs to work with Peterson; otherwise, DOE does not have a solution.

Why Peterson is late
PRESIDENT JIMMY CARTER AND THE CONGRESS
HAVE STIMIED NUCLEAR POWER'S FUTURE
For DOE, NRC, EPA, and Peterson

A decade ago Matt Eyre with Peco Energy called Peterson. Peco had been a partner with Private Fuel Storage (PFS). Mr. Eyre said Corbin McNeil wanted to get something happening with SNF disposal with Pigeon Spur, or Owl Creek, or PFS. A time was being set up when CEO McNeil would fly to Utah and give $5 million to Peterson to proceed with NRC licensing. But unfortunately about this same time the Peach Bottom Incident happened. DOE was going to allow PECO to build and operate an SNF storage facility at Peach Bottom, at PECO's expense. As part of the deal PECO was required to yield over its approximately $10 billion in the nuclear waste deposit fund, and PECO had to agree to turn over its Peach Bottom facility at any time to the DOE for the total sum of $1 dollar. When other utilities got wind of the deal they were furious and brought suit against DOE and PECO and got the contract voided. The utilities believed this to be unfair and it soured the utilities relationship with the DOE since.

This quashed Peterson's deal with PECO and wrecked their relationship. Since then Peterson has made a dozen proposals of various options to DOE to start

development of the Pigeon Spur. Since Peterson had done 10 years of public relations development in Box Elder County, Peterson hoped that a license application might be done much more quickly even in 60 days. Peterson has asked NRC about this. NRC said put in another application. So now Peterson has been squeamish about talking with NRC because he still cannot raise the $1.5 million deposit required to pay for NRC's estimated expenses that was talked about ten years before.

Peterson has now made a dozen proposal requests of various sorts to DOE for funding different aspect of the SNF disposal project. A proposal to build 100 storage spots for $100 million seamed to generate the most interest. But Peterson has always been turned down with DOE giving the excuse that the Congress has restricted them to only YM. See letter from Birdie Hamilton-Ray attached.

Maybe the best help from DOE Peterson has ever had was the consideration of Linda Desell. But now even she says she can't talk to Peterson any more. In Peterson's attempt to work with DOE's Buzz Savage and Linda Desell, EPA's Betsy Forinash, and NRC,s Mark Delligatti and James Hall, he feels that he has gotten cross wise with them, he has worn out his welcome, but not sure why. Peterson has gotten quite assertive with them, telling them what they are doing with YM is not going to work, where his 300-year SNF disposal solution will. Peterson believes this is evident in what has happened to the GNEP and with the one million year storage requirement coming out of the U.S. Court of Appeals for the District of Columbia Circuit in its July 9, 2004 order in Court Case No. 01-1258. So DOE and NRC know about Peterson and his 300-year SNF disposal solution, but will not call and talk to him about it or any such thing as this hearing. Peterson is very busy. He does not monitor the FEDERAL REGISTER. Only when he would learn about this hearing from other sources would Peterson have knowledge of it. Peterson apologizes. DOE and NRC staff know of Peterson and his

300-year solution. They could have told him about this hearing. Please excuse Peterson for entering this matter late.

CONTENTIONS

The United States is in a most contentious situation threatening it's very fundamental survival. Peterson's linage comes from scientists, bankers, and astute businessmen. For many decades Peterson has personally known America's trade must balance or deficit would result. Since WWII the U.S. apparent trade deficit of $12 trillion has grown mostly from importing oil and foreign cars. Some are saying the real deficit may actually be as high as $60 trillion. The days of this borrowing type of economy are over. In desperation, the Fed is now gearing up to print $1.45 trillion paper, which will only be a start, which will create contention Worldwide and be our demise if we don't rush to have America producing what it consumes.

Nuclear–electricity and hydrogen-powered cars are our only choice, 1,150 nuclear plants are needed now. Solar, wind, etc. are only toys.

Yucca Mountain (YM) was and is designed to store required military waste and also to close down the nuclear industry. It does not make sense to geologically bury cesium and strontium then be required to cool the mountain with 10,000 HP of fans for a hundred years, when the pure fission waste can be convection air cooled and made to be low level class-C waste in 300 years, and the 97% part of spent nuclear fuel (SNF) that is fuel can be kept and eventually be fuel.

In NEI v EPA in the U.S. Court of Appeals for the District of Columbia Circuit in the July 9, 2004 order in Court Case No. 01-1258, sixty scientists from

the likes of DOE, NRC, NAS, MIT, and NEI gave testimony and NAS concluded SNF could not be disposed of so recommended that it be stored for one million years in the likes of YM, which requirement the Court put upon EPA. Without doing the "300-year solution" of precise separation and storage, SNF will always haunt the nuclear industry and U.S. Government to the point of killing the nuclear industry, when it is an un-substitutable necessity for our way of life's continuation.

The cost, the waste, length of time for required storage and the politics of YM type geological burial make it futile. DOE and NRC and may have only a limited future nuclear industry with the YM type of storage. With the conditions of the U.S. and world economies today, Peterson contends the outcome of this hearing must be to proceed with the "300-year SNF permanent disposal solution" over Yucca Mountain. YM is too scientifically contentious, costly, and politically wrong. YM has been worked on for a long time and may likely never be finished and used for unprocessed SNF storage.

For a decade Peterson and his scientific group's work of developing the "300-year solution" has been rejected by all branches of the U.S. Government contending that the Congress's singular demand is for YM type storage. But the Court in order No. 01-1258 points out that YM was not the specific prescription of the Congress but is a representation of the thorough intention for EPA to do what is required. The Court Order in 01-1258 says that EPA has the latitude to deviate from the concept of YM to whatever concept EPA concludes will work. In 1977 President Jimmy Carter put the solution for SNF into impossible contention when he ordered and stopped all processing of SNF. It was in this wrongful precept that the SNF solution of YM was born. Peterson contends that its is

wrong to plan for a future of nuclear power and not plan to reprocess SNF and not plan to use its 97% part of potential fuel. Peterson contends that the proposed use of YM for storage of canisters of SNF, stored end to end, so only the end canister is accessible, will always be wrong and not conducive to future reprocessing and use of its potential fuel, as is near surface storage of SNF in a matrix, 12 feet underground, accessible only with a computer programmable gantry crane. With its power control turned off, there is no way of access to the stored SNF canisters.

Many of the scientific world would contend that YM is not the right thing to be doing now. The nuclear utilities would contend they have been forced into onsite storage by the Presidents and Congress and don't see an open future for their industry. Ask them, they will tell you that they do not know where the power will be coming from for the families of their children.

"Nuclear power" has wrongly been used for public contention for our aspiring political leaders to get attention. When Governor Mike Leavitt was at the helm in Utah he would have told you that more nuclear power would never come to be. The entire Utah delegation followed his lead. That was back when our nation's deficit was 1/3 of what it is today. Anti-nuclear was a phony stance to scare the public and get their vote. It has caused contention that was never justified. In the time since Peterson would contend that our nation could have and should have been building nuclear-electricity and hydrogen. If we had gotten energy independent 10 years ago and if Senator Orrin Hatch would have listened when Peterson emphatically told him that if the Congress did not balance trade

the situation would soon bankrupt the World. Peterson contends there is contention that needs to be fixed.

Peterson has written much and often to NRC Commissioners Greg Jaczko and Pete Lyons and DOE Scientist Buzz Savage about trying to energize the "300-year SNF disposal solution." Peterson believes that they believe in it, but that does not matter. The contention of the Congress and Presidents have had them and all of U.S. Government scientists tied to only YM, which they know has fundamental problems. Peterson has good cause for not filing on time because DOE and NRC cannot communicate back to Peterson about the "300-year solution" and the five sites in five states which he is proposing to build. Factors apply and balance as follows per § 2.309 (c) i to viii.

1. So Peterson contends that Jaczko, Lyons, and Savage would contend that the "300-year solution" of processing, storage, and use of the SNF components is the right and best way of disposing SNF, but due to the contention in the Presidencies and the Congress over SNF, our nation's scientists cannot contend with SNF processing and can not communicate effectively with Peterson, and so cannot even inform him of meetings happening in regards to SNF. As to this matter, Peterson was not informed of it.

2. Peterson is not government sponsored so he is not required to work for SNF storage in YM and never process SNF. Peterson contends that he can rightly "300-year" dispose of SNF where there is contention as to whether U.S. Government workers can ever actually dispose of it. NRS and DOE became parties in this matter not because of notice in the Gazette, but from much mutual

talk about what can be done about SNF disposal, likewise, Peterson should have been included in those talks.

3. Peterson has been working of SNF storage since it was originally proposed for Davis Canyon in Utah, even before that when he worked on its storage at INL in the FAST project. Peterson has been working over a decade on “300-year disposal” of SNF. Probably no one in DOE or NRC has worked for a real solution for SNF disposal more than Peterson. The nuclear utilities pay a good portion of their revenues for SNF disposal which Peterson is proposing to do, so he wants to use that money. SNF storage is not disposal, it’s only storage. Peterson has more interest in proceeding with a right way of disposing of SNF than anyone else.

4. If all that the NRC board does is give license to DOE to continue with YM, no progress is being made for SNF disposal. NRC would contend SNF stores well dry, in vertical or horizontal canisters at the utilities. The Utilities would contend that such SNF storage is in their way and hinders further development of their operations. If DOE and NRC want to rightly contend about SNF disposal, then they need to be contending with Peterson and his “300-year solution.” The nuclear utilities should consider Peterson and the “300-year solution” as an alternative to on-site storage. Eventually the utilities cannot continue to make power, as out some time they cannot continue to contend with on-site storage. So how the Board contends with YM v the “300-year SNF disposal solution” will be the difference as to how the nuclear utilities contend for future power.

5. To do SNF disposal by the proposed “300-year solution,” it will have to be studied, worked on, and accepted by the DOE and NRC. They cannot continue to ignore it. Peterson believes with the Court’s 7/9/04 order in Case No. 01-1258, EPA can adopt the “300-year SNF disposal solution” and still be within its mandate from the Congress. DOE and NRC looking at this now is exactly what needs to happen. Information enough is now in this hearing to rightly dispose of SNF, where before it has never been.

6. It is very unfortunate, but due to all of the contention over nuclear power between the consecutive Presidents, the Congress and the public, and the poor dealings with it by the DOE, NRC, and EPA, because of the Congressional mandate, somebody, like this Nuclear Safety Board needs to see this and set matters straight. Otherwise, the U.S. is not going to get nuclear-electric and hydrogen to replace oil and with that being the biggest deficit item, the U.S. will not be able to balance trade, and so the U.S. cannot avoid economic failure.

7. Now giving DOE a construction license will put YM no further ahead than it was a few years ago. Our Nation does not now have time to be going down the wrong path. Not processing SNF is wrong. All the other countries of the world will be doing at least the U.S. PUREX process. The U.S. did have a very good program in the Global Nuclear Energy Partnership (GNEP). But now that opportunity for developing peaceful use of nuclear energy is likely lost because the U.S. could not prepare for it because of all of the controversies. With the “300-year SNF issue” a possibility, a consensus could be done to quickly proceed down the “300-year path” for SNF disposal. With all of the

controversies of YM, continuing down the YM path could very will end in a stalemate.

8. Without the “300-year SNF disposal solution,” what to do with SNF will always be a controversy. With the “300-year SNF disposal solution” this hearing could likely develop a record for the future of nuclear power, where otherwise it might not.

Geological Storage, Utility Canister Storage and “300-yr SNF disposal” compared

YM deep geological burial is ultimate isolation of the radioactive materials in SNF from access or contact by the public, unless percolating water corrodes container and carries isotopes into a water supply. Physically digging through the earth to get to it would be senseless exposure to radiation so would be very unlikely.

Dry concrete casks with steel canister storage in fenced sites of nuclear power plants is also very secure storage of SNF. Cutting through a steel mesh fence to get to a canister is physically fairly easy, but once inside, breaking through two feet of concrete cask and the heavy case of the steel canister would be very difficult and would require some very serious demolition equipment.

Peterson’s “300-year storage barrier design” has the features of both the YM geological burial and the concrete cask with their internal steel canister construction, so the 12 ft underground storage of SNF rods might not be as deep as geological burial, but with underground concrete structures and steel casks it would be substantially less accessible than reactor site dry storage. What makes

the “300-year storage” far more safe that either geological burial or field cask storage is that when hundreds of years from now, when all the work of breaching storage might be done, when finally getting to the inside of a “300-year SNF storage system,” an intruder would find no plutonium weapons material or even uranium, they would have for some time before been separated from the SNF for use as new fuel.

SNF is 3% fission waste, 1% transuranics, and 96% U238 uranium. In the “300-year system” 5-9s (99.999%) of the transuranics are isolated and eventually used as fuel. After 300 years of decay, the clean fission waste qualifies as low-level waste Class-C. The 95% of SNF that is U238 is simply stacked away for future use as fuel.

Peterson contends that if the U.S. and World are to go to a nuclear-electric and hydrogen fuel system the 97% of SNF that is potential fuel should not be buried, but eventually be available and used up for fuel. Peterson contends that to manufacture a fuel to replace oil, for the U.S. to have a workable economy with balanced trade, to slow global warming, to do the GNEP, to continue to live the life style we have now, to have the same comforts in the rest of the world, and so to have peace in the world, all of the world will need to be relying on nuclear-electricity and hydrogen, which will not happen if YM is continued as presently planned, putting out of reach and burying the 97% part of SNF that is future fuel.

Peterson contends his “300-year SNF disposal solution” works for the benefit of the nuclear power industry and better use of nuclear fuel for the Public’s benefit and YM does not. Peterson contends that YM is a waste of

10,000 HP for cooling the cesium and strontium in deep burial where instead in the “300-year solution” it would be near surface convection air-cooled. YM would waste 97% of America’s nuclear fuel because SNF gets buried without a plan for separation of the materials. YM dumps SNF disposal responsibility on future generations, out to one million years, where Peterson “300-year SNF disposal solution” puts away permanently SNF in three parts in 300 years. Peterson’s “300-year SNF disposal solution” benefits the public, YM does not.

A list of contentions, a letter from DOE, four drawings, and a report titled “PLAN & START TO FIX PROBLEMS” accompany and support this pleading.

Dated this 5th day of October, 2009.

Original Signed by William D. (Bill) Peterson

William D Peterson, 300-year spent nuclear
fuel permanent disposal solution
Third Party License Applicant Appellant

Differences, Controverted Issues, List of Contentions
Ref § 2.309 (f)

FEATURE / ISSUE	300-Yr Solution	Yucca Mountain (YM)
SNF stored underground	12 feet / concrete	> 900 feet / earth
Near a railroad spur	yes < 1 mile	no, 200 miles
Each canister assessable	yes, crane lift cap	no, end to end tunnels
Efficiently cooled in storage	yes, convection air	no, 10,000 HP air fans
Protective from missile attack	yes, underground	yes deep underground
Protective from aircraft impact	yes, underground	yes deep underground
SNF processed	yes, 5-9s separation	no (97% fuel wasted)
Finite storage period	yes, 300 + 500 yrs	no, one million years
Fission waste disposed of as Class-C	yes, in 300 years	no
Fission waste disposed of as Class-A	yes, in 800 years	no
Transuranics used in new fuel	yes, >1% of SNF	no
U-238 uranium recovered	yes, 96% of SNF	no
Facility construction cost	~$6 billion	$60 billion
Time to construction completion	~4 years	10 years
Time until public allowed re-entry	800 years	never, > million years
Percentage of fuel initially used	~ 3 %	~ 3 %
Percentage of fuel ultimately used	~ 100 %	~ 3 %
Percentage of fuel wasted	~ 0.0 %	~ 97 %
Would have capacity for GNEP	yes	no
NRC license application ever submitted	yes, twice	no
Is a solution for SNF for Nuc-hydrogen	yes “300-yr method”	no, YM lacks capacity

Department of Energy
Office of Civilian Radioactive Waste Management
Office of Repository Development
P.O. Box 364629
North Las Vegas, NV 89036-8629

QA:NA

AUG 06 2OO3

Mr. William D. Peterson
P&A Engineers
2127 Lincoln Lane
Holladay, UT 84124

Dear Mr. Peterson:

UNSOLICITED PROPOSALS REQUEST

References:
(1) E-mail, Peterson to Chu, dtd 07/18/03 (Yucca Mountain will be full, not usable for President Bush's new plants. Use intermediate storage in Utah, ref. NRC Dockets 72-22 and 72-23)
(2) E-mail, Peterson to Chu, dtd 07,'18/03 (Yucca Mountain will be full, not usable for newly constructed plants; use intermediate storage in Utah, ref. NRC Dockets 72-22 and 72-23
(.3) Ltr. Peterson to Weightman, dtd 06/02/03 (Storage Site License with Engineering to Build)
(4) Ltr, Barrowes to Augustine, dtd 05/08/03 (Development of hardened 300-year storage - New Application)
(5) Ltr, Barrowes to Augustine, dtd 05/07/03 (Development of hardened 300-year storage - New Application)
(6) Ltr, Peterson to Augustine, dtd 09/02/02 (Request for further consideration of our 300-year disposal process)
(7) E-mail. Peterson to Augustine, dtd 06/06/02 (300-year Disposal Solution of Spent Nuclear Fuel [SNF])
(8) Ltr, Augustine to Peterson, dtd 12/21/01 (Rejecting consideration tbr funding your unsolicited proposal.)
(9) E-mail, Peterson to Augustine --
dtd 09/28/01 (Abstract 1: Hardened Sub-surface Storage of Spent Nuclear Fuel):
dtd 10/02/01, (Abstract 2: More Secure Transportation of Spent Nuclear Fuel):
dtd t0/09/01. (Abstracl 3: l)rop-Protection Cushioning for Spent Nuclear Fuel Canisters):
dtd 10/10/01, (Abstract 4: 1st Phase Operation and Demonstration of Pigeon Spur Spent Nuclear l:uel Storage Facility;)
dtd 10/11/01. (Abstract 5: Demolition Plan for Decommissioning Spent Nuclear Fuel Storage Facility)

Thank you for your e-mails and letters concerning your proposal to develop a 300-year solution for dealing with spent nuclear fuel or reprocessed spent nuclear fuel.

The U.S. Department of Energy (DOE) takes its direction from the U.S. Congress in matters relating to the disposition of spent nuclear fuel and high-level radioactive waste. The Nuclear Waste Policy Act of 1982 (Act), as amended, directs the DOE to seek permanent disposal for such waste. The Act further directed the U.S. Environmental Protection Agency to develop standards for permanent disposal, and the U.S. Nuclear Regulatory Commission to license a permanent disposal site. Consequently, the DOE must design a permanent disposal system that meets this regulatory framework. Your proposal for a 300-year storage period would not fulfill the Congressional directives contained in the Act. With regard to reprocessed wastes, the decisions to do so would be a matter for the nuclear industry in the United States. Currently, the industry has chosen not to be engaged in spent fuel reprocessing. *

As was stated in the reference number 9 letter from John Augustine to you, DOE appreciates your interest in this important national issue and DOE's waste management program. However, at this time, we are not in a position to consider your request for funding any of the referenced unsolicited proposals.

Sincerely,

Birdie V. Hamilton-Ray
Contracting Officer

cc:
Margaret Chu, DOE/HQ (RW-I), FORS
S. A. Bokhari, DOE/HQ (RW-51E), FORS
D. K. Kim, DOE/HQ (RW-20E), FORS
John Augustine, DOE/NETL, Pittsburgh, PA
Linda Weightman, DOE/NETL, Pittsburgh, PA
W. J. Boyle, DOE/ORD (RW-40W),
Las Vegas, NV
W. B. Miller, DOE/ORD (RW-31W),
Las Vegas, NV
J. D. Ziegler, DOE/ORD (RW-40W),
Las Vegas, NV

* Blue & red coloring by Peterson WDP File C:\p\nuc\DOE\OCRWM\BRH-B806.doc

WDP notes:

In Subtitle E of Title I, of the NWPA of 1982 the Congress has stipulated that **the DOE will do an** "***orderly phase-out of site specific activities at all candidate sites other than the Yucca Mountain site***."

WDP says: "This is a policy to close down the nuclear industry. The industry requires one site for every 100 plants."

The above is a computer scan of a letter received at the 2388 East Gregson mail box on Saturday, October 25, 2003. The letter contained an envelope postmarked Aug 07 03 Las Vegas NV. The envelope is stamped - Attempted delivery, not known address. The address of the included envelope is - WILLIAM D PETERSON P&A ENGINEERS 2127 LINCOLN LN HOLLADAY UT 84124. A green sticky on the face of the letter has the following note:

10/16/03 Carla, This letter was returned, see attached envelope. Mirna

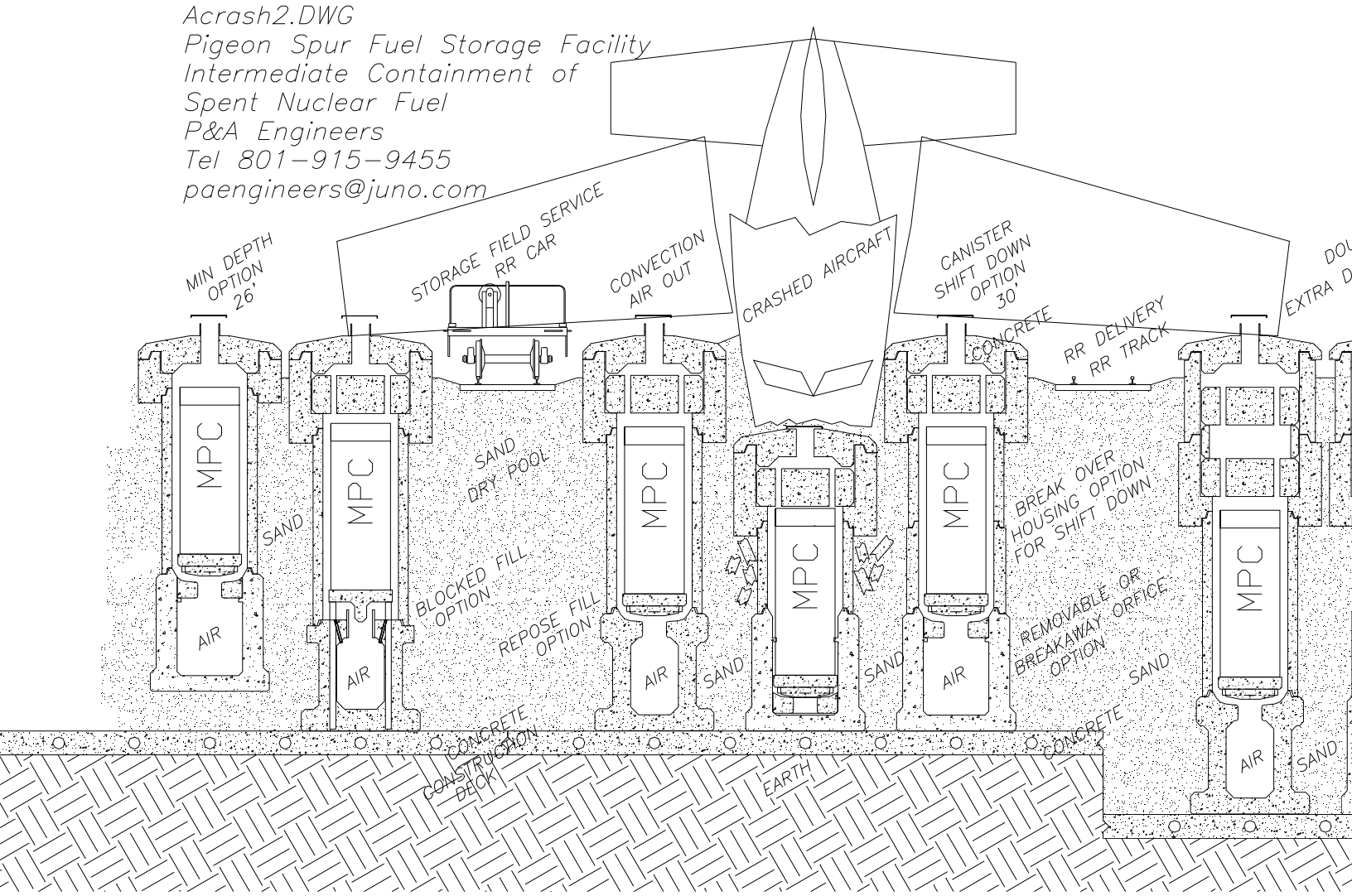

U.S. Patented storage and transport

CRASH DEMOLITION SEQUESNE

An inbound aircraft hits and transfers its momentum to a concrete spent nuclear fuel (SNF) containment cask. The downward force on the cap, plug, and retainer cause the vertical housing pipe underneath to collapse. When this happens the plug forces the SNF canister down which shears the orifice ring mount allowing the canister to be pushed into the underneath convection air passageway. This puts the canister more than 12 feet underground. This procedure allows a large momentum transfer to occur before a serious load impacts on the canister. Now the SNF containing canister is enveloped in concrete structure surrounded by sand. As more force from the impact is applied the canister is entirely in solid fluidic compression which may cause it to implode but it would be very unlikely that SNF fuel rods would escape the husky canister and even more unlikely that SNF pellets would be caused to escape fuel rods and then escape the canister. In the event of such a crash all affected canisters and casks would be replaced. Several options are shown in the above drawing.

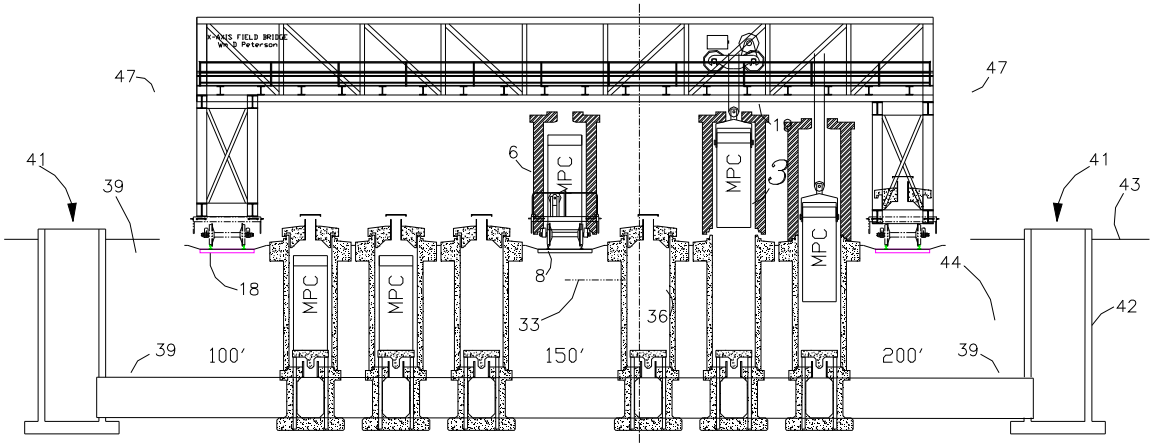

Fig.3

VIEWED FROM LEFT END,

SECTION AT A−A

Drawing Date 12/26/98

Fig.4

FUEL RODS IN CANISTER WATER DETECTION SECTION THRU MPC

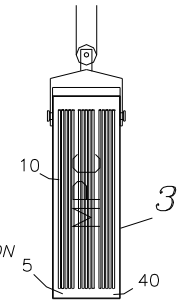

Exhibit E (7 of 7)

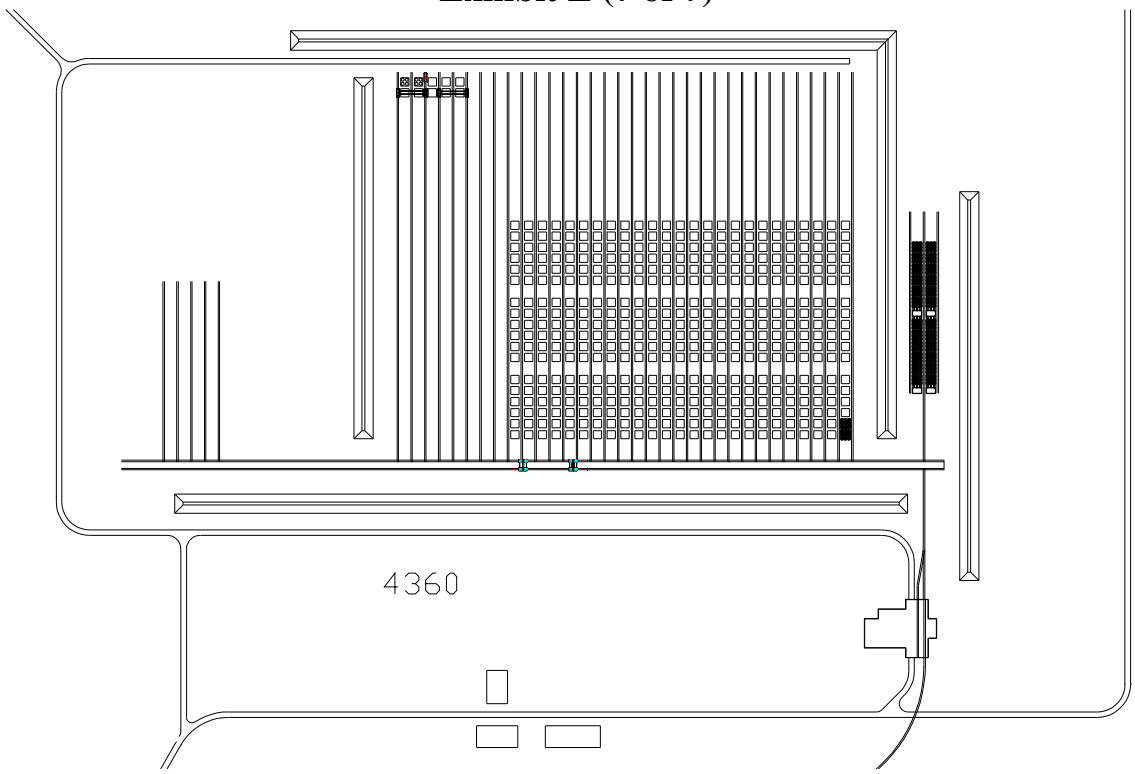

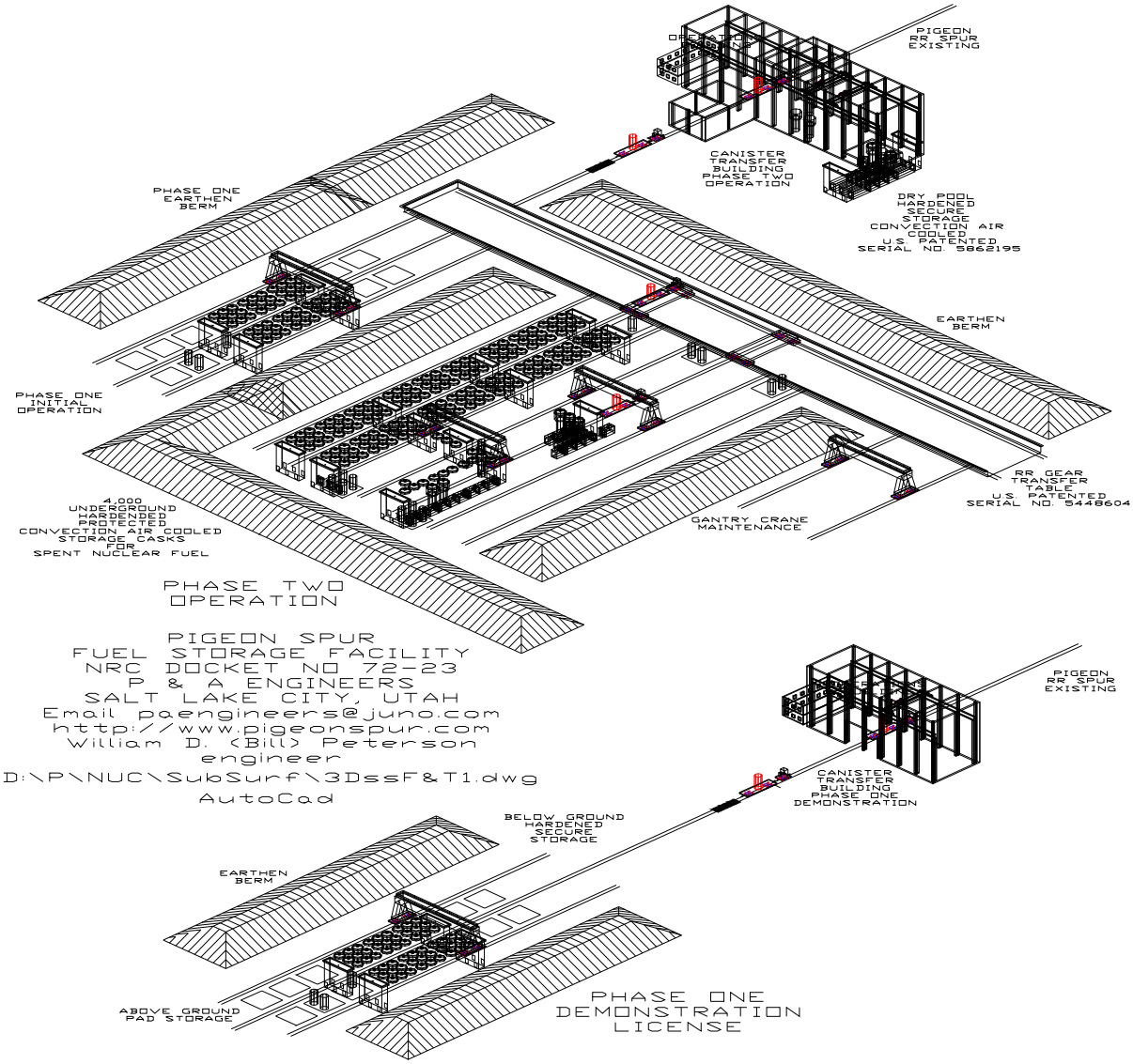
PIGEON
RR SPUR
EXISTING
CANISTER
TRANSFER
BUILDING
PHASE TWO
OPERATION
DRY POOL
HARDENED
SECURE
STORAGE
CONVECTION AIR
COOLED
U.S. PATENTED
SERIAL NO. 5862195
PHASE ONE
EARTHEN
BERM
EARTHEN
BERM
PHASE ONE
INITIAL
OPERATION
RR GEAR
TRANSFER
TABLE
U.S. PATENTED
SERIAL NO. 5446604
4,000
UNDERGROUND
HARDENED
PROTECTED
CONVECTION AIR COOLED
STORAGE CASKS
FOR
SPENT NUCLEAR FUEL
GANTRY CRANE
MAINTENANCE
PHASE TWO
OPERATION
PIGEON SPUR
FUEL STORAGE FACILITY
NRC DOCKET NO 72-23
P & A ENGINEERS
SALT LAKE CITY, UTAH
Email paengineers@juno.com
http://www.pigeonspur.com
William D. (Bill) Peterson
engineer
D:\P\NUC\SubSurf\3DssF&T1.dwg
AutoCad

PIGEON
RR SPUR
EXISTING
CANISTER
TRANSFER
BUILDING
PHASE ONE
DEMONSTRATION
BELOW GROUND
HARDENED
SECURE
STORAGE
EARTHEN
BERM
ABOVE GROUND
PAD STORAGE
PHASE ONE
DEMONSTRATION
LICENSE

PLAN & START TO FIX PROBLEMS

William "Bill" D. Peterson II

ref
U.S. Patent Application No. 11/899,209, originally filed 2002
Projected Publication Date 08/28/2008

Nuclear-Hydrogen (H_2) fuel replaces oil and coal to fix Fuel, GCC, and the Economy

SUMMARY

A plan and action is needed to start to fix Fuel, GCC, and economies worldwide. They are not going to fix themselves. The fix is huge. Replacing oil with hydrogen for fuel is current technology and will work. H_2 without carbon (C) is the best thing that can be done to slow global climate change (GCC). H_2, or any new fuel, will have to be manufactured. The H_2 source water (H_2O) is unlimited; the H_2 just burns back to water. For U.S. needs, we propose the U.S. build and operate 1,150 new nuclear power plants. These plants would be supported by Peterson's 300-year permanent spent nuclear fuel (SNF) disposal solution. This needed new technology has been proven and will work.

WHERE IT STARTS

Spent Nuclear Fuel (SNF) can be disposed of in 300 years. The U.S. will need to build 500 new nuclear power plants to manufacture hydrogen – H_2, and then by 2020, 350 more nuclear plants would be needed for demand growth and 300 more to replace coal-using plants. Altogether, the near term need is for 1,150 new nuclear plants. Initially up to five 300-year SNF storage facilities would be needed. More would be needed to service the rest of the World's switch to nuclear-hydrogen.

Disposal of SNF is the single most critical path item to fixing the peak oil fuel crisis, GCC, and the economy. To start this requires SNF disposal, which before has not been possible. Our new 300-year SNF disposal solution is done with 300-years of intermediate storage and a very high (5-9s) degree of reprocessing that in the past has not been possible or even allowable. At some time during the 300 years the SNF will require 5-9s (99.999%) of the transuranics separated from the fission waste. Then after the 300 years of storage of the fission waste, the radioactive decay has reduced it so that it qualifies as low level waste Class-C. The transuranics containing the plutonium is used up in new fuel. The 96% part of SNF that is U-238 uranium is simply stock piled for future use as fuel. INL and Argonne chemists have done 5-9s separation on commercial and navy samples of SNF.

This SNF "fix" works for the GNEP (Global Nuclear Energy Partnership), which the U.S. must do to for the whole world! With nuclear power, hydrogen (H-2) can be manufactured to replace use of gasoline and diesel. So, with sufficient

nuclear electric generation we can replace the need to burn fossil fuels. This ends CO-2 emissions from fossil fuels, fixing man's cause of global warming. Nuclear is a U.S. technology; with the U.S. doing this for the world, industry can be brought back to the U.S. for having balance of trade and sustaining economy.

This fix with nuclear should not be delayed; it has been needed for decades. All the nations of the world will require H_2 fuel. There is no reason to wait and not do this now. No other way to manufacture enough fuel is known. Other energy like bio-fuels, wind, solar, and wave motion energies should be pursued and used, but they will not be sufficient. In the transition the use of oil will linger. If by chance any other fixes are discovered, then good, we should go to work on them as well. But there is no reason to postpone starting nuclear-hydrogen. Detroit is ready and wants to and will begin this year to do make hydrogen powered vehicles. H_2 power technology will always be a good option. For a long time it may be our only option.

For the fix, the need for the SNF disposal situation exists worldwide. In the U.S. SNF disposal is needed for 104 operating plants. In other countries SNF disposal is needed for more than 400 plants. With a world transition to nuclear-hydrogen, this requirement will increase.

IT'S AMERICAN

Nuclear energy is a U.S. invention and it is right that the U.S. should take the lead and responsibility of its development and use, worldwide. Otherwise, wastes might not be properly handled making future problems. The plutonium bi-product must not end up in the wrong hands, which could potentially enable wrongful use and much trouble. So the U.S. should promote nuclear technology and its use while endeavoring to prevent the misuse of it. So it is right that the U.S. would take the responsibility for the world's nuclear power, the control of nuclear fuel, and do the disposal of its industries' waste, including its remnant SNF. To begin this, Peterson proposes building and operating five (5) SNF storage sites of the 300-year disposal design. Eventually SNF reprocessing facilities will be needed, but for now, this would not be urgent. INL has demonstrated 5-9 processing of SNF technology, and they are scaling it up.

We have been working for two decades on SNF storage. Almost half that time has been in the development of the 300-year disposal solution. The U.S. DOE has by Congress been limited to Yucca Mountain disposal. In 1977 President Jimmy Carter disallowed SNF processing. So it has not been possible for the DOE to research for the 300-year storage / processing SNF disposal solution. Idaho nuclear chemists have pursued 5-9s processing technology after Peterson announced the requirement.

A 300-year SNF storage / disposal facility will cost around $6 billion dollars. But five of them will cost less than half the projected cost to finish Yucca Mountain, and YM does not do the fix. The nuclear utilities pay one mil per kWhr

(over $3 million per day) into a fund to pay for the SNF fix. An order of President Clinton has that money going into the General Treasury. The Congress or President needs to put the money back with the work.

Historically it takes around 10 years to NRC license an SNF storage facility as we propose. Private Fuel Storage (PFS) has licensed such a facility in Western Utah and it took ten years to do it. But they still have the problem of being 31 miles from the railroad. Peterson has worked on his railroad siding site in Northern Utah during the same time, so it has most of its licensing work done. So NRC has been seeing Peterson's project for these 10 years. Peterson has told NRC he will seek approval from NRC in two months after a new license submission. NRC has been prompting Peterson for ten years. They realize the urgency, so quicker licensing could likely happen. This is a major advantage Peterson has with his work with the 300-year solution. Getting SNF disposal resolved quickly can motivate the nuclear utilities into construction activity that could more quickly get nuclear-hydrogen available and happening. The automakers want to build for the H-2 solution. With today's uncertainties, the use of gasoline and diesel vehicles is not appealing and the public is in a stalemate. So it's much to the advantage of everyone to transition to a nuclear-hydrogen fuel system as quickly as possible. The public needs to realize the situation and tell this to their Congressman, and then they can do it without being rebuked. Until this happens Peterson needs a loan to finish NRC licensing and to work on construction until the Congress puts the utilities trust fund back with the work.

William "Bill" D Peterson, II, M.S., P.E.,
300-year permanent SNF disposal solution
Operations Research Engineer
Mechanical Engineer
6413 Vine, Clearfield, Utah 84015
Tel 801-825-3123, Cel 208-317-5291
Email: paengineers@juno.com ,
Please see http://www.lifeaftertheoilcrash.net/ . See the ASPO's Peak Oil Scenario chart on page 2 of the report.
See: http://www.nuclearhydrogen.com , www.peakoilfix.com
www.globalclimatechangefix.com , www.gccfix.com , www.economyfix.us

William D (Bill) Peterson
300-year SNF disposal solution
413 Vine St
Clearfield, Utah 84015
Tel / FAX 801-825-3123
Email paengineers@juno.com

October 5, 2009

UNITED STATES OF AMERICA
NUCLEAR REGULATORY COMMISSION
BEFORE THE ATOMIC AND SAFETY LICENSING BOARD

In the Matter of	)	CERTIFICATE OF SERVICE
	)	
U.S. DEPARTMENT OF ENERGY	)	Docket No. 63-001-HLW
License Applicant Appellant	)	
v.	)	(High-Level Waste Repository)
	)	license application speculation
U.S. NUCLEAR REGULATORY	)	
COMMISSION, Licensor Appeallee	)	Before the A&SL Board
	)	
& v.	)	ASLBP Nos. 09-876-HLW-CAB01
	)	09-877-HLW-CAB02
William D Peterson, 300-year spent nuclear	)	9-878-HLW-CAB03
fuel permanent disposal solution	)	09-892-HLW-CAB04
Third Party License Applicant Appellant	)	

CERTIFICATE OF SERVICE

I hereby certify that copies of the foregoing PETITION FOR ADMISION - CONTENTIONS for the NRC staff for production of documents asserted as privileged by NRC Staff. Under 10 C.F.R. Part 2, Subpart J, and MOTION to enter as a Third Party License Applicant dated October 5, 2009, have been served upon the following persons by Electronic Information Exchange.

Dated this 5th day of October, 2009.

William D Peterson, 300-year spent nuclear
fuel permanent disposal solution
Third Party License Applicant Appellant

U.S. Nuclear Regulatory Commission
Atomic Safety and Licensing Board (ASLBP)
Mail Stop T-3F23
Washington, DC 20555-0001

CAB 01
William J. Froehlich, Chair
Administrative Judge 001
wjf1@nrc.gov

Thomas S. Moore
Administrative Judge 002
tsm2@nrc.gov

Richard E. Wardwell
Administrative Judge YM 63-001-003
rew@nrc.gov

CAB 02
Michael M. Gibson, Chair
Administrative Judge 004
mmg3@nrc.gov

Alan S. Rosenthal
Administrative Judge 005 & 006
axr@nrc.gov or rsnthl@verizon.net

Nicholas G. Trikouros
Administrative Judge 007
ngt@nrc.gov

CAB 03
Paul S. Ryerson, Chair
Administrative Judge 008
psr1@nrc.gov

Michael C. Farrar
Administrative Judge 009
mcf@nrc.gov

Mark O. Barnett
Administrative Judge 010 & 011
mob1@nrc.gov or mark.barnett@nrc.gov

ASLBP (continued)

CAB 04
Thomas S. Moore, Chair
Administrative Judge 012
tsm2@nrc.gov

Paul S. Ryerson
Administrative Judge 013
psr1@nrc.gov

Richard E. Wardwell
Administrative Judge 014
rew@nrc.gov

Anthony C. Eitreim, Esq., Chief Counsel 015
ace1@nrc.gov
Daniel J. Graser, LSN Administrator 016
djg2@nrc.gov
Zachary Kahn, Law Clerk 017
zxk1@nrc.gov
Erica LaPlante, Law Clerk 018
eal1@nrc.gov
Matthew Rotman, Law Clerk 019
matthew.rotman@nrc.gov
Joseph Deucher 020
jhd@nrc.gov
Andrew Welkie 021
axw5@nrc.gov
Jack Whetstine 022
jgw@nrc.gov
Patricia Harich 023
patricia.harich@nrc.gov
Sara Culler 024
sara.culler@nrc.gov

U.S. Nuclear Regulatory Commission
Office of the Secretary of the Commission
Mail Stop O-16C1
Washington, DC 20555-0001
Hearing Docket
hearingdocket@nrc.gov 025

U.S. Nuclear Regulatory Commission
Office of Commission Appellate Adjudication
Mail Stop O-16C1
Washington, DC 20555-0001
OCAA Mail Center
ocaamail@nrc.gov 026

U.S. Nuclear Regulatory Commission
Office of the General Counsel
Mail Stop O-15D21
Washington, DC 20555-0001
Margaret J. Bupp, Esq.
mjb5@nrc.gov YM 63-001-027
Christopher Chandler, Esq.
ccc1@nrc.gov 028
Karin Francis, Paralegal
kxf4@nrc.gov 029
Adam Gendelman, Esq.
adam.gendelman@nrc.gov 030
Joseph S. Gilman, Paralegal
jsg1@nrc.gov 031
Daniel W. Lenehan, Esq.
dwl2@nrc.gov 032
Andrea L. Silvia, Esq.
alc1@nrc.gov 033
Mitzi A. Young, Esq.
may@nrc.gov 034
Marian L. Zobler, Esq.
mlz@nrc.gov 035
OGC Mail Center
OGCMailCenter@nrc.gov 036

U.S. Department of Energy
Office of General Counsel
1000 Independence Avenue S.W.
Washington, DC 20585
Martha S. Crosland, Esq.
martha.crosland@hq.doe.gov 037
Nicholas P. DiNunzio, Esq.
nick.dinunzio@rw.doe.gov YM 63-001-038
James Bennett McRae
ben.mcrae@hq.doe.gov 039
Cyrus Nezhad, Esq.
cyrus.nezhad@hq.doe.gov 040
Christina C. Pak, Esq.
christina.pak@hq.doe.gov 041

For U.S. Department of Energy
Office of Counsel, Naval Sea Systems Command Nuclear Propulsion Program
1333 Isaac Hull Avenue, SE
Washington Navy Yard, Building 197
Washington, DC 20376
Frank A. Putzu, Esq.
frank.putzu@navy.mil 042

U.S. Department of Energy
Office of General Counsel
1551 Hillshire Drive
Las Vegas, NV 89134-6321
Jocelyn M. Gutierrez, Esq.
jocelyn.gutierrez@ymp.gov 043
George W. Hellstrom, Esq.
george.hellstrom@ymp.gov 044
Josephine L. Sommer, Paralegal
josephine.sommer@ymp.gov 045

For U.S. Department of Energy
USA-Repository Services
Yucca Mountain Project Licensing Group
1160 N. Town Center Drive, Suite 240
Las Vegas, NV 89144
Stephen J. Cereghino, Licensing/Nucl Safety
stephen_cereghino@ymp.gov 046
Jeffrey Kriner, Regulatory Programs
jeffrey_kriner@ymp.gov 047

For U.S. Department of Energy
USA-Repository Services
Yucca Mountain Project Licensing Group
6000 Executive Boulevard, Suite 608
North Bethesda, MD 20852
Edward Borella, Sr Staff, Licensing/Nuclear Safety
edward_borella@ymp.gov

For U.S. Department of Energy
Talisman International, LLC
1000 Potomac St., NW, Suite 300
Washington, DC 20007
Patricia Larimore, Senior Paralegal
plarimore@talisman-intl.com 048

Counsel for U.S. Department of Energy
Morgan, Lewis & Bockius LLP
1111 Pennsylvania Ave., NW
Washington, DC 20004
Clifford W. Cooper, Paralegal
ccooper@morganlewis.com YM 63-001-049
Lewis M. Csedrik, Esq.
lcsedrik@morganlewis.com 050
Jay M. Gutierrez, Esq.
jgutierrez@morganlewis.com 051
Charles B. Moldenhauer, Esq.
cmoldenhauer@morganlewis.com 052
Brian P. Oldham, Esq.
boldham@morganlewis.com 053
Thomas D. Poindexter, Esq.
tpoindexter@morganlewis.com 054
Alex S. Polonsky, Esq.
apolonsky@morganlewis.com 055
Thomas A. Schmutz, Esq.
tschmutz@morganlewis.com 056
Donald J. Silverman, Esq.
dsilverman@morganlewis.com 057
Shannon Staton, Legal Secretary
sstaton@morganlewis.com 058
Annette M. White, Esq.
Annette.white@morganlewis.com 059
Paul J. Zaffuts, Esq.
pzaffuts@morganlewis.com 060

Counsel for U.S. Department of Energy
Hunton & Williams LLP
Riverfront Plaza, East Tower
951 East Byrd Street
Richmond, VA 23219
Kelly L. Faglioni, Esq.
kfaglioni@hunton.com 061
Donald P. Irwin, Esq.
dirwin@hunton.com 062
Stephanie Meharg, Paralegal
smeharg@hunton.com 063
Michael R. Shebelskie, Esq.
mshebelskie@hunton.com 064
Belinda A. Wright, Sr. Professional Assistant
bwright@hunton.com 065

Counsel for State of Nevada
Egan, Fitzpatrick, Malsch & Lawrence, PLLC
1750 K Street, NW, Suite 350
Washington, DC 20006
Martin G. Malsch, Esq.
mmalsch@nuclearlawyer.com 066
Susan Montesi:
smontesi@nuclearlawyer.com 067

Counsel for State of Nevada
Egan, Fitzpatrick, Malsch & Lawrence, PLLC
12500 San Pedro Avenue, Suite 555
San Antonio, TX 78216
Laurie Borski, Paralegal
lorbski@nuclearlawyer.com 076
Charles J. Fitzpatrick, Esq.
cfitzpatrick@nuclearlawyer.com 077
John W. Lawrence, Esq.
jlawrence@nuclearlawyer.com 078

Nevada Agency for Nuclear Projects
Nuclear Waste Project Office
1761 East College Parkway, Suite 118
Carson City, NV 89706
Steve Frishman, Tech. Policy Coordinator
steve.frishman@gmail.com 068
Susan Lynch, Administrator of Technical Prgms
szeee@nuc.state.nv.us 069

Bureau of Government Affairs
Nevada Attorney General
100 N. Carson Street
Carson City, NV 89701
Marta Adams, Chief Deputy Attorney General
madams@ag.nv.gov 079

Counsel for Lincoln County, Nevada
1100 S. Tenth Street
Las Vegas, NV 89017
Annie Bailey, Legal Assistant
baileys@lcturbonet.com YM 63-001-070
Eric Hinckley, Law Clerk
erichinckley@yahoo.com 071
Bret Whipple, Esq.
bretwhipple@nomademail.com 072

Lincoln County District Attorney
P. O. Box 60
Pioche, NV 89403
Gregory Barlow, Esq.
lcda@lcturbonet.com 080

Lincoln County Nuclear Oversight Program
P.O. Box 1068
Caliente, NV 89008
Connie Simkins, Coordinator
jcciac@co.lincoln.nv.us 073

For Lincoln County, Nevada
Intertech Services Corporation
PO Box 2008
Carson City, NV 89702
Mike Baughman, Consultant
bigboff@aol.com 081

Counsel for Nye County, Nevada
Ackerman Senterfitt
801 Pennsylvania Avenue, NW, #600
Washington, DC 20004
Robert Andersen, Esq.
robert.andersen@akerman.com 074

Counsel for Nye County, Nevada
530 Farrington Court
Las Vegas, NV 89123
Jeffrey VanNiel, Esq.
nbrjdvn@gmail.com 082

Nye County Regulatory/Licensing Advisor
18160 Cottonwood Rd. #265
Sunriver, OR 97707
Malachy Murphy, Esq.
mrmurphy@chamberscable.com 075

Nye County Nuclear Waste Repository Project Office (NWRPO)
1210 E. Basin Road, #6
Pahrump, NV 89060
Zoie Choate, Secretary
zchoate@co.nye.nv.us 083
Sherry Dudley, Admin. Technical Coordinator
sdudley@co.nye.nv.us 084

Clark County, Nevada
500 S. Grand Central Parkway
Las Vegas, NV 98155
Phil Klevorick, Sr. Mgmt Analyst
klevorick@co.clark.nv.us 086
Elizabeth A. Vibert, Deputy District Attorney
Elizabeth.Vibert@ccdanv.com 086

Counsel for Clark County, Nevada
Jennings, Strouss & Salmon
8330 W. Sahara Avenue, #290
Las Vegas, NV 89117
Bryce Loveland, Esq.
bloveland@jsslaw.com 095

Counsel for Clark County, Nevada
Jennings, Strouss & Salmon
1700 Pennsylvania Avenue, NW, Suite 500
Washington, DC 20006-4725
Elene Belte, Legal Secretary
ebelete@jsslaw.com 087
Alan I. Robbins, Esq.
arobbins@jsslaw.com 088
Debra D. Roby, Esq.
droby@jsslaw.com 089

Eureka County, Nevada
Office of the District Attorney
701 S. Main Street, Box 190
Eureka, NV 89316-0190
Theodore Beutel, District Attorney
tbeutel.ecda@eurekanv.org 096

Counsel for Eureka County, Nevada
Harmon, Curran, Speilberg & Eisenberg, LLP
1726 M. Street N.W., Suite 600
Washington, DC 20036
Diane Curran, Esq.
dcurran@harmoncurran.com YM 63-001-090
Matthew Fraser, Law Clerk
mfraser@harmoncurran.com 091

Eureka County Public Works
PO Box 714
Eureka, NV 89316
Ronald Damele, Director
rdamele@eurekanv.org 097

Nuclear Waste Advisory for Eureka County, Nevada
1983 Maison Way
Carson City, NV 89703
Abigail Johnson, Consultant
eurekanrc@gmail.com 092

For Eureka County, Nevada
NWOP Consulting, Inc.
1705 Wildcat Lane
Ogden, UT 84403
Loreen Pitchford, Consultant
lpitchford@comcast.net 098

Counsel for Churchill, Esmeralda, Lander, and Mineral Counties, Nevada
Armstrong Teasdale, LLP
1975 Village Center Circle, Suite 140
Las Vegas, NV 89134-6237
Jennifer A. Gores, Esq.
jgores@armstrongteasdale.com 093
Robert F. List, Esq.
rlist@armstrongteasdale.com 094

Esmeralda County Repository Oversight Program- Yucca Mountain Project
PO Box 490
Goldfield, NV 89013
Edwin Mueller, Director
muellered@msn.com 099

Mineral County Nuclear Projects Office
P.O. Box 1600
Hawthorne, NV 89415
Linda Mathias, Director
yuccainfo@mineralcountynv.org 100

For City of Caliente, Lincoln County, and White Pine County, Nevada
P.O. Box 126
Caliente, NV 89008
Jason Pitts, LSN Administrator
jayson@idtservices.com 108

White Pine County, Nevada
Office of the District Attorney
801 Clark Street, #3
Ely, NV 89301
Richard Sears, District Attorney
rwsears@wpcda.org 101

White Pine County Nuclear Waste Project Office
959 Campton Street
Ely, NV 89301
Mike Simon, Director
wpnucwst1@mwpower.net 109

For White Pine County, Nevada
Intertech Services Corporation
PO Box 2008
Carson City, NV 89702
Mike Baughman, Consultant
bigboff@aol.com 102

Counsel for Caliente Hot Springs Resort LLC
John H. Huston, Attorney at Law
6772 Running Colors Avenue
Las Vegas, NV 89131
John H. Huston, Esq.
johnhhuston@gmail.com 110

Counsel for Inyo County, California
Berger, Silverman & Gephart
233 E. Carrillo Street, Suite B
Santa Barbara, CA 93101
Michael Berger, Esq.
mberger@bsglaw.net YM 63-001-103
Robert Hanna, Esq.
rshanna@bsglaw.net 104

Counsel for Inyo County, California
Greg James, Attorney at Law
710 Autumn Leaves Circle
Bishop, CA 93514
E-Mail: gljames@earthlink.net 111

Inyo County Yucca Mountain Repository
Assessment Office
P. O. Box 367
Independence, CA 93526-0367
Alisa M. Lembke, Project Analyst
alembke@inyocounty.us 105

California Department of Justice
Office of the Attorney General
1300 I Street, P.O. Box 944255
Sacramento, CA 94244-2550
Susan Durbin, Deputy Attorney General
susan.durbin@doj.ca.gov 106
Michele Mercado, Analyst
michele.Mercado@doj.ca.gov 107

California Department of Justice
Office of the Attorney General
1515 Clay Street, 20th Floor, P.O. Box 70550
Oakland, CA 94612-0550
Timothy E. Sullivan, Deputy Attorney General
timothy.Sullivan@doj.ca.gov 112

California Department of Justice
300 S. Spring Street, Suite 1702
Los Angeles, CA 90013
Brian Hembacher, Deputy Attorney General
brian.hembacher@doj.ca.gov 113

California Energy Commission
1516 Ninth Street
Sacramento, CA 95814
Kevin, W. Bell, Senior Staff Counsel
kwbell@energy.state.ca.us 122

Nuclear Energy Institute
Office of the General Counsel
1776 I Street, NW Suite 400
Washington, DC 20006-3708
Michael A. Bauser, Esq.
mab@nei.org 114
Anne W. Cottingham, Esq.
awc@nei.org 115
Ellen C. Ginsberg, Esq.
ecg@nei.org 116

Counsel for Nuclear Energy Institute
Pillsbury Winthrop Shaw Pittman LLP
2300 N Street, N.W.
Washington, DC 20037-1122
Jay E. Silberg, Esq.
jay.silberg@pillsburylaw.com 123
Timothy J.V. Walsh, Esq.
timothy.walsh@pillsburylaw.com 124
Maria D. Webb, Senior Energy Legal Analyst
maria.webb@pillsburylaw.com 125

Counsel for Nuclear Energy Institute
Winston & Strawn LLP
1700 K Street, N.W.
Washington, DC 20006-3817
William A. Horin, Esq.
whorin@winston.com YM 63-001-117
Rachel Miras-Wilson, Esq.
rwilson@winston.com 118
David A. Repka, Esq.
drepka@winston.com 119
Carlos L. Sisco, Senior Paralegal
csisco@winston.com 120

Native Community Action Council
P.O. Box 140
Baker, NV 89311
Ian Zabarte, Member of Board of Directors
mrizabarte@gmail.com 121

Counsel for Native Community Action Council
Alexander, Berkey, Williams & Weathers LLP
2030 Addison Street, Suite 410
Berkeley, CA 94704
Curtis G. Berkey, Esq.
cberkey@abwwlaw.com 126
Rovianne A. Leigh, Esq.
rleigh@abwwlaw.com 127
Scott W. Williams, Esq.
swilliams@abwwlaw.com 128

For Joint Timbisha Shoshone Tribal Group
3560 Savoy Boulevard
Pahrump, NV 89601
Joe Kennedy, Executive Director
joekennedy08@live.com 129
Tameka Vazquez, Bookkeeper
purpose_driven12@yahoo.com 130

Counsel for Joint Timbisha Shoshone Tribal Group
Fredericks, Peebles, & Morgan LLP
1001 Second St.
Sacramento, CA 95814
Felicia M. Brooks, Data Administrator
fbrooks@ndnlaw.com 136
Ross D. Colburn, Law Clerk
rcolburn@ndnlaw.com 137
Sally Eredia, Legal Secretary
seredia@ndnlaw.com 138
Darcie L. Houck, Esq.
dhouck@ndnlaw.com 139
Brian Niegemann, Office Manager
bniegemann@ndnlaw.com 140
John M. Peebles, Esq.
jpeebles@ndnlaw.com 141
Robert Rhoan, Esq.
rrhoan@ndnlaw.com 142

Counsel for Joint Timbisha Shoshone Tribal Group
Godfrey & Kahn, S.C.
One East Main Street, Suite 500
P. O. Box 2719
Madison, WI 53701-2719
Julie Dobie, Legal Secretary
jdobie@gklaw.com YM 63-001-131
Steven A. Heinzen, Esq.
sheinzen@gklaw.com 132
Douglas M. Poland, Esq.
dpoland@gklaw.com 133
Hannah L. Renfro, Esq.
hrenfro@gklaw.com 134
Jacqueline Schwartz, Paralegal
jschwartz@gklaw.com 135

Counsel for Joint Timbisha Shoshone Tribal Group
Godfrey & Kahn, S.C.
780 N. Water Street
Milwaukee, WI 53202
Arthur J. Harrington, Esq.
aharrington@gklaw.com 143
wjf1@nrc.gov, 144
paengineers@juno.com, 145
zxk1@nrc.gov, 146
zchoate@co.nye.nv.us 147

Original Signed by William D. (Bill) Peterson

Dated this 5th day of October **2009**