Nuclear Operating Company

South Texas Project Electric Generating Station 4000 Avenue F – Suite A Bay City, Texas 77414

September 28, 2009
U7-C-STP-NRC-090164

U. S. Nuclear Regulatory Commission
Attention: Document Control Desk
One White Flint North
11555 Rockville Pike
Rockville, MD 20852-2738

South Texas Project
Units 3 and 4
Docket Nos. 52-012 and 52-013
Response to Request for Additional Information

Reference: Letter, Jessie Muir to Scott Head, "Request for Additional Information, Letter Number Four Related to the Environmental Report for the South Texas Combined License Application", dated August 14, 2009 (ML091620673).

The above referenced letter contained 16 Requests for Additional Information (RAI) pertaining COLA Part 3 Environmental Report, 11 of which have been previously answered. The remaining 5 are attached and include:

03.03-01	05.02-08
05.02-06	05.10-04
05.02-07	

There are no commitments in this letter.

D091
NRO

STI: 325341936

If you have any questions, please feel free to contact me at (361) 972-7136, or Russell W. Kiesling at (361)-972-4716

I declare under penalty of perjury that the foregoing is true and correct.

Executed on 9/28/09

Scott Head
Manager, Regulatory Affairs
South Texas Project, Units 3 & 4

rwk

Attachments:

Attachment 1: RAI 03.03-01
Attachment 2: RAI 05.02-06
Attachment 3: RAI 05.02-07
Attachment 4: RAI 05.02-08
Attachment 5: RAI 05.10-04

cc: w/o attachment except*
(paper copy)

Director, Office of New Reactors
U. S. Nuclear Regulatory Commission
One White Flint North
11555 Rockville Pike
Rockville, MD 20852-2738

Regional Administrator, Region IV
U. S. Nuclear Regulatory Commission
611 Ryan Plaza Drive, Suite 400
Arlington, Texas 76011-8064

Kathy C. Perkins, RN, MBA
Assistant Commissioner
Division for Regulatory Services
Texas Department of State Health Services
P. O. Box 149347
Austin, Texas 78714-9347

Alice Hamilton Rogers, P.E.
Inspection Unit Manager
Texas Department of State Health Services
P. O. Box 149347
Austin, Texas 78714-9347

C. M. Canady
City of Austin
Electric Utility Department
721 Barton Springs Road
Austin, TX 78704

*Steven P. Frantz, Esquire
A. H. Gutterman, Esquire
Morgan, Lewis & Bockius LLP
1111 Pennsylvania Ave. NW
Washington, D.C. 20004

*George F. Wunder
Two White Flint North
11545 Rockville Pike
Rockville, MD 20852-2738

*Jessie Muir
Two White Flint North
U.S. Nuclear Regulatory Commission
Mail Drop T6D32
11545 Rockville Pike
Rockville, MD 20852-2738

(electronic copy)

*George Wunder
Loren R. Plisco
*Jessie Muir
U. S. Nuclear Regulatory Commission

Steve Winn
Eddy Daniels
Joseph Kiwak
Nuclear Innovation North America

Jon C. Wood, Esquire
Cox Smith Matthews

J. J. Nesrsta
R. K. Temple
Kevin Pollo
L. D. Blaylock
CPS Energy

Question Number: 03.03-01

QUESTION:

Provide clarification of changes made to Table 3.3-1 in Revision 2 of the ER.

FULL TEXT (Supporting Information):

In ER Revision 2, Table 3.3-1, normal and maximum water use values for several of the water streams increased from the previous revision. Provide a description of the changes in plant systems that brought about these increases.

In ER Revision 2, natural evaporation values for the MCR were removed from Table 3.3-1. ER Revision 2, Section 3.3.1 states "STP 1 & 2 water usage can be seen in Reference 3.3-2." Reference 3.3-2 is listed as Amendment 10 to the South Texas Project Units 1 and 2 Environmental Report, dated July 16, 1987. However, staff was not able to find any water usage values for STP Units 1 and 2 in this reference. Please provide an updated reference for STP Units 1 and 2 water usage including natural evaporation from the MCR.

State clearly which values included in Table 3.3-1 are based on observations, which are design values, and which are estimated from simulations.

RESPONSE:

The requested clarification regarding changes made to Table 3.3-1 in Revision 2 of the STP Units 3 and 4 Environmental Report (ER) is provided below. This clarification is provided in three sections that correspond with the three paragraphs in the "Full Text (Supporting Information)" of the NRC RAI.

Restatement of NRC RAI – First Paragraph

In ER Revision 2, Table 3.3-1, normal and maximum water use values for several of the water streams increased from the previous revision. Provide a description of the changes in plant systems that brought about these increases.

Response to NRC RAI – First Paragraph

The normal and maximum water use values for several of the water streams in Table 3.3-1 of the ER, Revision 2, increased (as compared to the previous revision) as a result of the Ultimate Heat Sink (UHS) redesign that is reflected in Section 9.2 of the COLA Final Safety Analysis Report (FSAR), Revision 2. Specifically, the increases in the water use values result from the selection of design heat load values for the redesigned UHS that are higher than the minimum heat load values used for the earlier UHS design. The new heat load values assumed expressly for the purposes of UHS design are summarized in Tables 9.2-20a and 9.2-22 of the FSAR, Revision 2. It should be emphasized that the higher heat loads assumed for purposes of UHS design

conservatively bound, and thus do not result in a change to, the minimum RCW heat exchanger heat removal capability required for LOCA as described in the ABWR Design Control Document (DCD), Section 9.2.11.4 and Tables 9.2-4a, 9.2-4b, and 9.2-4c.

While reviewing the calculation sources of the water use values in ER Table 3.3-1 for preparation of this response, an error was discovered related to the table entry for normal UHS Tower blowdown. Specifically, the flow rate recorded in ER Table 3.3-1 for normal UHS Tower blowdown (Stream 5) was mistakenly transposed from the source calculation as 283 gpm rather than the correct calculation value of 290 gpm. To correct this transposition error, ER Table 3.3-1 will be revised to reflect the correct calculation value of 290 gpm for normal UHS Tower blowdown.

It is noted that this correction would otherwise require a conforming change to the ER Table 3.3-1 entry for final effluent discharge to the MCR (Stream 10 on Page 2 of the table) since the UHS Tower blowdown is an addend component of the Stream 10 value. However, as detailed further in the STPNOC response to RAI Question No. 5.10-4 (provided concurrently with this response), a recently updated operating plant (Units 3 and 4) water balance calculation is resulting in a number of changes to ER Table 3.3-1, including the Stream 10 value. Notwithstanding, the updated Stream 10 value reflected in the ER Table 3.3-1 markup (in the STPNOC response to RAI Question No. 5.10-4) is based on the correct value of 290 gpm for normal UHS Tower blowdown.

The ER Table 3.3-1 entry for total well water demand for normal UHS System makeup (Stream 8) is the summation of UHS Tower evaporation (Stream 4), blowdown (Stream 5), and drift (Stream 7), as well as UHS seepage. The Stream 8 value – 885 gpm – was correctly transferred from the calculation and thus is not affected by the inadvertent transposition error in the normal blowdown rate (i.e., it is based on the correct blowdown flow rate of 290 gpm). However, it was noted during preparation of this response that UHS seepage, although appropriately factored into the calculated Stream 8 value as an addend, was not explicitly identified in ER Table 3.3-1 as a groundwater stream.

To clarify that UHS seepage is a component of the total well water demand for normal UHS System makeup (Stream 8), a new "Stream 13" will be added to ER Table 3.3-1 to represent UHS seepage. With the addition of this new table entry for UHS Seepage, the values for Streams 4, 5, 7, and 13 will correctly sum to the Stream 8 value reported in ER Table 3.3-1. A conforming change will be made concurrently to ER Figure 3.3-1, "Water Use Diagram Summary," and Figure 3.4-1, "Cooling Water Flow Diagram," to indicate new Stream 13 for UHS seepage.

The ER Figure 3.3-1 and Figure 3.4-1 changes indicated above are shown on the markups at the end of this response. The changes discussed above to ER Table 3.3-1 impact and/or are substantively related to other water usage values addressed in detail in the STPNOC response to NRC RAI No. 05.10-04. Thus, the changes to ER Table 3.3-1 resulting from this response are reflected in the markups included in the STPNOC response to NRC RAI No. 05.10-04.

Restatement of NRC RAI – Second Paragraph

In ER Revision 2, natural evaporation values for the MCR were removed from Table 3.3-1. ER Revision 2, Section 3.3.1 states "STP 1 & 2 water usage can be seen in Reference 3.3-2." Reference 3.3-2 is listed as Amendment 10 to the South Texas Project Units 1 and 2 Environmental Report, dated July 16, 1987. However, staff was not able to find any water usage values for STP Units 1 and 2 in this reference. Please provide an updated reference for STP Units 1 and 2 water usage including natural evaporation from the MCR.

Response to NRC RAI – Second Paragraph

Water usage values for STP Units 1 and 2 are incorporated in the STP Units 1 and 2 ER, Amendment 10, which is Reference 3.3-2 cited in Section 3.3.1 of the STP Units 3 and 4 ER, Revision 2. Specifically, STP Units 1 and 2 ER Section 3.3, "Plant Water Use," and Table 3.3-1, "Plant Water Use for Two Units," present water usage information for Units 1 and 2, including MCR natural and forced evaporation, seepage, makeup, blowdown, and rainfall. Within Amendment 10 of the Units 1 and 2 ER, estimated normal annual natural evaporation may be derived by subtracting the forced evaporation value provided in Section 3.3 (last paragraph on Page 3.3-2) from the 80 percent capacity factor value for total evaporation in Table 3.3-1 (Line No. 22).

Much of the Units 1 and 2 ER water usage information was incorporated and/or updated in ER Amendment 3, and remains unchanged in the current ER Amendment 10. It is noted that STP Units 3 and 4 ER Section 2.3.2.2.1; ER Tables 2.3.2-18, 2.3.1-22, and 2.9S-1; and FSAR Table 2.4S.12-3 summarize historical information on water use by STP Units 1 and 2. Additional information on total annual water use by STP Units 1 and 2 may be found in annual water use surveys and reports such as those referenced in ER Section 2.9S.1.

MCR natural evaporation was reevaluated in 2007, and the results were used in Table 3.3-1 of the STP Units 3 and 4 ER until they were removed in Revision 2 to reflect the fact that MCR natural evaporation was already accounted for under Units 1 and 2. The source of the reevaluated MCR natural evaporation values is Bechtel Calculation No. 25293-401-M0C-WA-00001, "Water Balance Calculation," Revision 1, July 25, 2007 (proprietary). Upon request, the proprietary calculation will be made available for NRC review in the electronic reading room.

Restatement of NRC RAI – Third Paragraph

State clearly which values included in Table 3.3-1 are based on observations, which are design values, and which are estimated from simulations.

Response to NRC RAI – Third Paragraph

The following table indicates the basis for each value included in the revised STP Units 3 and 4 ER Table 3.3-1 provided in the STPNOC response to RAI Question No. 5.10-4

Streams	Basis for Value
15, 43	Observations of STP Units 1 and 2
27	Observations of ABWRs currently in operation
4, 5, 6, 7, 8, 11, 13, 34	Design values
9	Simulation
1, 2, 3, 10, 16, 17, 19, 20, 21, 22, 23, 24, 26, 29, 31, 32, 33, 35, 36, 37, 39, 41	Calculation based on other streams
28, 30, 40, 42, 44	Engineering judgment
12, 14	Accounted under STP Units 1 and 2 water usage

CANDIDATE COLA REVISION:

STPNOC proposes that Figures 3.3-1 and 3.4-1 of the STP Units 3 and 4 ER be revised as indicated on the following markups. As indicated above, the changes to ER Table 3.3-1 resulting from this response are reflected in the markups included in the STPNOC response to NRC RAI No. 05.10-04 (provided concurrently with this response).

ER Figure 3.3-1

STPNOC proposes that Figure 3.3-1 be revised to reflect new Stream 13 as indicated on the following page.

ER Figure 3.4-1

STPNOC proposes that Figure 3.4-1 be revised to reflect new Stream 13 as indicated on the last page of this response.

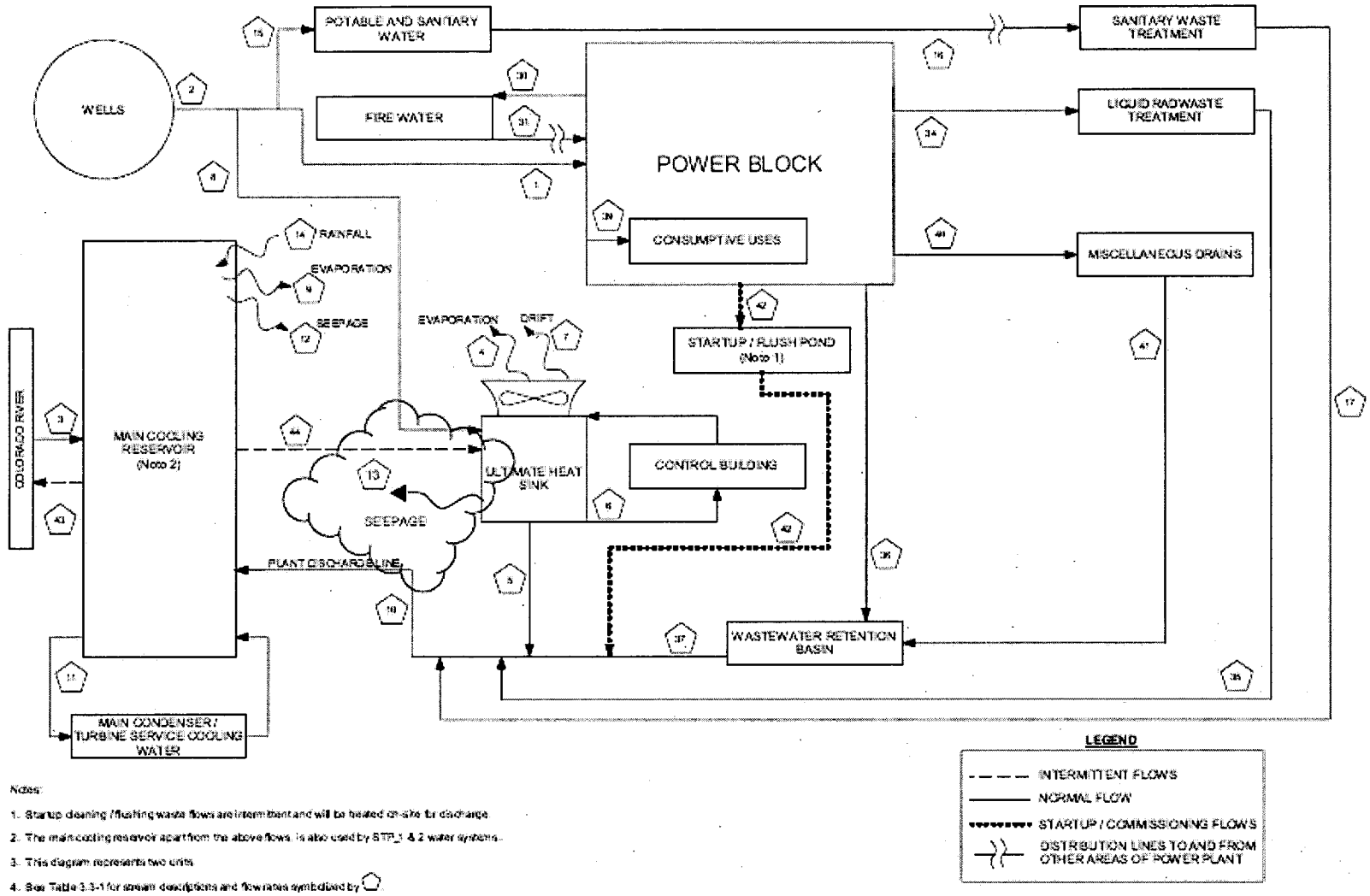

Notes:

1. Startup cleaning / flushing waste flows are intermittent and will be treated on-site for discharge.
2. The main cooling reservoir apart from the above flows, is also used by STP_1 & 2 water systems.
3. This diagram represents two units.
4. See Table 3.3-1 for stream descriptions and flow rates symbolized by ⬠.
5. This diagram is used to illustrate flows and is not representative of the final piping configurations.

Figure 3.3-1 Water Use Diagram Summary

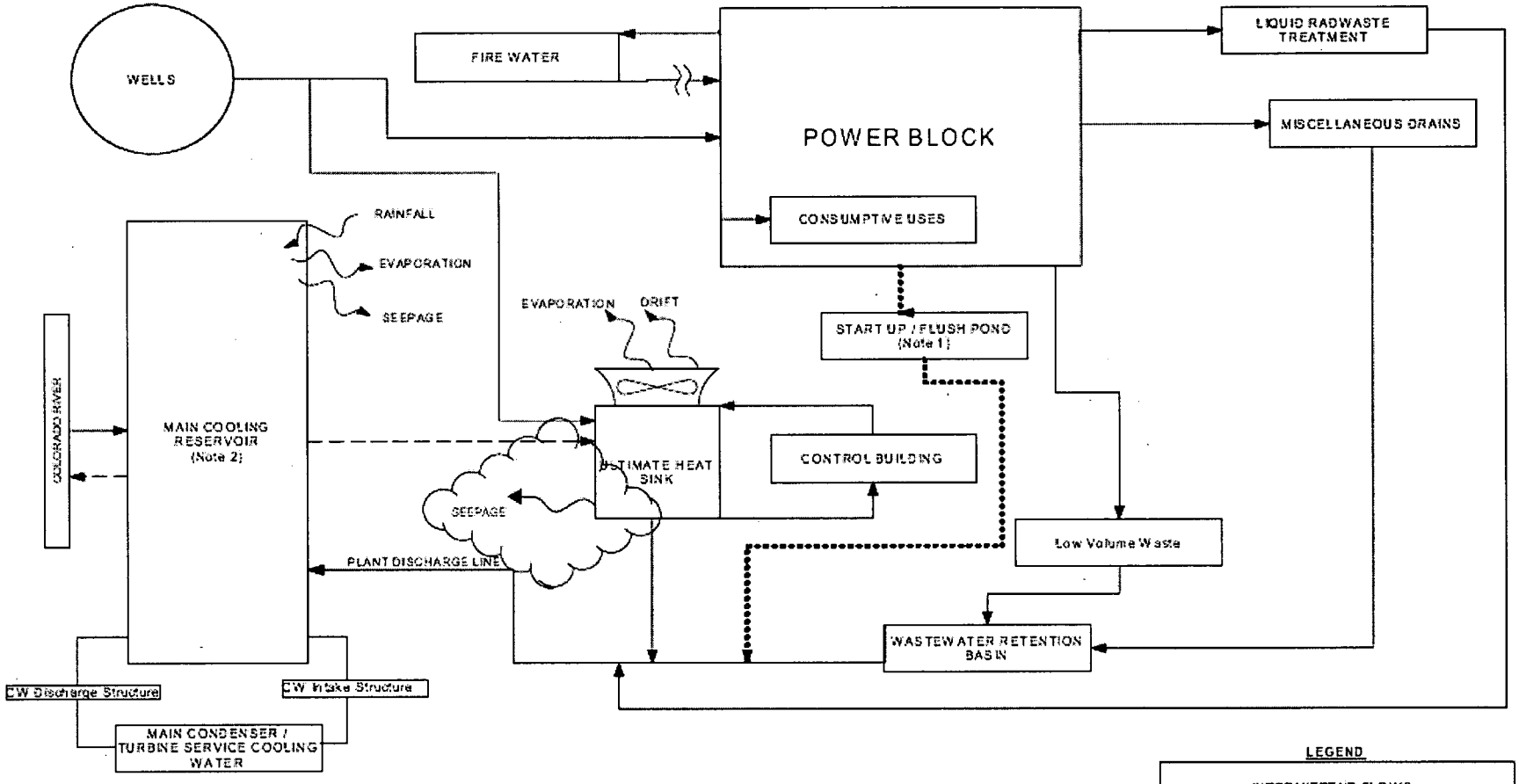

Notes:

1. Start up cleaning / flushing waste flows are intermittent and will be treated on-site for discharge
2. The main cooling reservoir apart from the above flows, is also used by STP 1 & 2 water systems
3. This diagram represents two units.
4. This diagram is used to illustrate cooling systems flow paths and is not representative of the final piping configuration

Figure 3.4-1 STP 3 & 4 Cooling Water Flow Diagram

Question Number: 05.02-06

QUESTION:

Clarify the operating policy of the MCR discharge to the Colorado River with respect to the existing TPDES permit.

FULL TEXT (Supporting Information):

In response to staff's RAI 5.2-5 (STPNOC Letter U7-C-STP-NRC-090091 dated July 30, 2009), STPNOC stated, for operation of Units 1 and 2, that "Blowdown is permitted only when the river flow at the blowdown facility is greater than or equal to 2500 cfs." (page 5 of 11). The existing TPDES permit allows discharges from the MCR to the Colorado River if the river flow at the discharge location is greater than or equal to 800 cfs. Clarify whether the 2500 cfs river flow at the discharge location is an existing STPNOC operating policy and not a permit condition.
In response to staff's RAI 2.3-6 (STPNOC Letter U7-C-STP-NRC-090006 dated January 22, 2009), STPNOC stated, for operation of all four units, that "Blowdown is permitted only when the river flow at the blowdown facility is greater than or equal to 2500 cfs." (page 3 of 17). The existing TPDES permit allows discharges from the MCR to the Colorado River if the river flow at the discharge location is greater than or equal to 800 cfs. Clarify if the 2500 cfs river flow at the discharge location would be the STPNOC operating policy when all four units are in operation. Would there be future discharges from the MCR when the river flow at the discharge location is less than 2500 cfs but greater than or equal to 800 cfs?

RESPONSE:

This RAI is addressed in two subparts:

(a) Clarify whether the 2500 cfs river flow at the discharge location is an existing STPNOC operating policy and not a permit condition.

The condition of allowing blowdown when the river flow at the discharge location is greater or equal to 2500 cfs is an existing operating procedure for STP 1 & 2, not a condition of the existing TPDES permit (Reference 1).

(b) Clarify if the 2500 cfs river flow at the discharge location would be the STPNOC operating policy when all four units are in operation. Would there be future discharges from the MCR when the river flow at the discharge location is less than 2500 cfs but greater than or equal to 800 cfs?

STPNOC intends to operate all four units using the 2500 cfs minimum river flow condition at the discharge location for blowdown as stipulated in the existing operating procedure for STP 1 & 2. However, STPNOC will revise the operating procedure to provide the flexibility to blowdown at river flow rates less than 2500 cfs, consistent with the limits provided by the TPDES permit

(Reference 1), if operating experience or other circumstances indicate the desirability of such a change.

In a telephone call held on September 1, 2009 to clarify this RAI, the NRC staff also requested the following information.

The MCR water budget and water quality model for four-unit operation described in the response to ER RAI 2.3-6 (STPNOC Letter U7-C-STP-NRC-090006, dated January 22, 2009) has been re-run with the blowdown rules changed to assume that blowdown is permitted whenever river flow is at 800 cfs or greater, as allowed by the existing permit condition. All other modeling conditions were the same as outlined in that response. The simulation was performed on both the historical river flow condition and the projected flow condition based on the proposed Lower Colorado River Authority/San Antonio Water System diversions, as discussed in the response to ER RAI 5.2-5 (STPNOC Letter U7-C-STP-NRC-090091, dated July 30, 2009). The results are summarized in Tables 1 and 2 for the two river flow conditions respectively, along with the simulation results for the 2-Unit case that allows blowdown at a minimum river flow rate of 2500 cfs in accordance with the existing STP 1 & 2 operating procedure, as documented in the July 30, 2009 response.

Table 1: Statistics Summary, Historical River Flows

Operation Scenario[1]	Top Number = Discharge (river flow) below the River Makeup Pumping Facility (cfs) [Bottom Number in square brackets= Number of days at or below top number]					
	minimum	maximum	mean	10th percentile	50th Percentile	90th percentile
Two Units (Units 1 and 2)	0 [1]	78,700.0 [21,064]	2,553.0 [16,171]	253.0 [2,106]	813.6 [10,532]	5,629.1 [18,958]
Four Units (Units 1 to 4)	0 [1]	79,300.0 [21,064]	2,503.8 [16,260]	253.0 [2,106]	795.0 [10,532]	5,610.0 [18,958]

Operation Scenario	Top Number = Water temperature of the blowdown discharge (°F) [Bottom Number in square brackets= Number of days at or below top number][2]					
	minimum	maximum	mean	10th percentile	50th Percentile	90th percentile
Two Units (Units 1 and 2)	55.8 [1]	94.9 [1,810]	76.2 [974]	64.1 [181]	75.2 [905]	90.5 [1,629]
Four Units (Units 1 to 4)	57.8 [1]	95.0 [2,735]	77.1 [1,601]	69.4 [274]	75.6 [1,368]	88.0 [2,462]

Operation Scenario	Top Number = Total Dissolved Solids of the blowdown discharge (mg/L) [Bottom Number in square brackets= Number of days at or below top number][2]					
	minimum	maximum	mean	10th percentile	50th Percentile	90th percentile
Two Units (Units 1 and 2)	1,841.8 [1]	3,625.5 [1,810]	2,178.5 [1,198]	1,934.2 [181]	2,048.1 [905]	2,599.0 [1,629]
Four Units (Units 1 to 4)	1,932.3 [1]	4,999.7 [2,735]	2,924.0 [1,523]	2,313.4 [274]	2,844.8 [1,368]	3,673.3 [2,462]

Note 1: The "Two Units" scenario allows blowdown at a minimum river flow of 2500 cfs, and the "Four Units" scenario allows blowdown at a minimum river flow of 800 cfs.
Note 2: Represents the number of days, with blowdown discharge and the temperature or total dissolved solids concentration of the blowdown, at or below the "top number", which is the value shown on the first row for each scenario.

Table 2: Statistics Summary, Projected River Flows

Operation Scenario[1]	Top Number = Discharge (river flow) below the River Makeup Pumping Facility (cfs) [Bottom Number in square brackets= Number of days at or below top number]					
	minimum	maximum	mean	10th percentile	50th percentile	90th percentile
Two Units (Units 1 and 2)	0 [1]	108,586.0 [18,507]	1,911.7 [14,925]	100.5 [1,851]	558.9 [9,254]	3,947.9 [16,656]
Four Units (Units 1 to 4)	0 [1]	108,586.0 [18,507]	1,866.0 [15,062]	100.5 [1,851]	509.2 [9,254]	3,879.9 [16,656]

Operation Scenario	Top Number = Water temperature of the blowdown discharge (°F) [Bottom Number in square brackets= Number of days at or below top number][2]					
	minimum	maximum	mean	10th percentile	50th percentile	90th percentile
Two Units (Units 1 and 2)	59.2 [1]	94.3 [1,304]	74.7 [698]	64.1 [130]	73.9 [652]	86.9 [1,174]
Four Units (Units 1 to 4)	60.9 [1]	95.0 [1,708]	77.3 [980]	70.1 [171]	76.0 [854]	87.6 [1,537]

Operation Scenario	Top Number = Total Dissolved Solids of the blowdown discharge (mg/L) [Bottom Number in square brackets= Number of days at or below top number][2]					
	minimum	maximum	mean	10th percentile	50th percentile	90th Percentile
Two Units (Units 1 and 2)	1,809.9 [1]	3,750.3 [1,304]	2,256.0 [747]	1,950.3 [130]	2,185.8 [652]	2,643.9 [1,174]
Four Units (Units 1 to 4)	1,891.3 [1]	6,044.2 [1,708]	3,610.7 [915]	2,823.1 [171]	3,547.5 [854]	4,549.9 [1,537]

Note 1: The "Two Units" scenario allows blowdown at a minimum river flow of 2500 cfs, and the "Four Units" scenario allows blowdown at a minimum river flow of 800 cfs.
Note 2: Represents the number of days, with blowdown discharge and the temperature or total dissolved solids concentration of the blowdown, at or below the "top number", which is the value shown on the first row for each scenario.

REFERENCES:

1. Texas Commission on Environmental Quality, Permit to Discharge Wastes under Provisions of Section 402 of the Clean Water Act and Chapter 26 of the Texas Water Code-Texas Pollutant Discharge Elimination System (TPDES) Permit No. WQ0001908000, Austin, Texas, July 21, 2005.

CANDIDATE COLA REVISION:

No COLA revision is required as a result of this RAI response.

Question Number: 05.02-07

QUESTION:

Explain the apparent discrepancy in forced evaporation values for STP Units 1 and 2 reported in response to staff's RAI 2.3-6.

FULL TEXT (Supporting Information):

ER Revision 2, Table 2.9S-1, Plant Parameters and Site Characteristics for STP Units 1 and 2, mentions a river water consumptive use of 37,100 ac-ft/yr. In response to staff's RAI 2.3-6 (STPNOC Letter U7-C-STP-NRC-090006 dated January 22, 2009), STPNOC stated, in the proposed text changes to ER Subsection 10.5S.2.2, that the normal forced evaporation of STP Units 1 and 2 is 33,200 ac-ft/yr.

Clarify the difference in these values and provide the source for each. State the forced evaporation values for STP Units 1 and 2 and provide a reference or a source for these values.

RESPONSE:

The differences in the MCR normal forced evaporation values noted in the NRC RAI result from the fact that these values are derived from different sources. As detailed further below, the value in STP Units 3 and 4 Environmental Report Table 2.9S-1 represents a 3-year average of historical reported water consumption, while the value cited in the STPNOC response to NRC RAI No. 02.03-06 was derived in a January 2009 MCR thermal performance calculation. For purposes of evaluating site water usage in the STP Units 3 and 4 licensing basis, the MCR forced evaporation values for STP Units 1 and 2 are considered to be the normal and maximum values derived in the January 2009 MCR thermal performance calculation.

The value for STP Units 1 and 2 river water consumptive use – 37,100 acre-ft/year – in Table 2.9S-1 of STP Units 3 and 4 Environmental Report (ER), Revision 2, is a 3-year average of the annual surface water consumption reported to the Texas Commission on Environmental Quality (TCEQ) for calendar years 2004, 2005, and 2006. For clarification, the source references cited in the third column of ER Table 2.9S-1 for river water consumptive use will be updated to refer to the three TCEQ water usage reports that were used to compute the 3-year average value. The ER markups containing these changes to ER Table 2.9S-1, as well as changes to ER Section 2.9S.1, "References," to add the three pertinent references, are included in the STPNOC response to NRC RAI No. 05.10-04 (provided concurrently with this response).

The MCR normal forced evaporation stated in the STPNOC response to NRC RAI 02.03-06 for operation of STP Units 1 and 2 – 33,200 acre-ft/year – is an estimated long-term average annual value assuming normal operating conditions at 93 percent load factor. The source of this value is Bechtel Calculation No. 25293-000-K0C-ME00-00001, "MCR Thermal Performance Study," Revision 2, effective January 20, 2009 (proprietary). The calculation methodology includes the use of a computer model to simulate MCR thermal performance using the rated plant operation

information and historical meteorological data. The simulation covers a period of 59 years, with 8 years of data not used due to the unavailability of certain meteorological data (primarily data on wind speed and cloud cover, making any data that was available for those years unsuitable for use).

In addition to the average annual value, the calculation also derives a maximum annual value for MCR forced evaporation – 37,200 acre-ft/year – assuming Units 1 and 2 operating with a 100 percent load factor. The proprietary calculation is available for NRC review in the electronic reading room.

CANDIDATE COLA REVISION:

This response requires changes to ER Table 2.9S-1 and ER Section 2.9S.1, "References." These changes impact and/or are substantively related to other water usage values addressed in detail in the STPNOC response to NRC RAI No. 05.10-04 (provided concurrently with this response). Thus, the conforming changes related to this response are reflected in the markups included in the STPNOC response to NRC RAI No. 05.10-04.

Question Number: 05.02-08

QUESTION:

Explain the apparent discrepancy in proposed text changes to ER Subsection 3.3.1, ER Subsection 10.5S.2.2, and the proposed changes to ER Table 3.3-1.

FULL TEXT (Supporting Information):

In response to staff's RAI 2.3-6 (STPNOC Letter U7-C-STP-NRC-090006 dated January 22, 2009), STPNOC stated, in the proposed text changes to ER Subsection 3.3.1, that the forced evaporation of STP Units 3 and 4 is 23,190 gpm (37,405 ac-ft/yr) at 100% load and 21,600 gpm (34,841 ac-ft/yr) at 93% load (page 16 of 17). In the same letter, STPNOC stated, in proposed changes to ER Table 3.3-1, that the normal MCR forced evaporation from STP Units 3 and 4 is 23,190 gpm (37,405 ac-ft/yr) and the maximum is 49,000 gpm (79,037 ac-ft/yr) (page 16 of 17). In the same letter, STPNOC stated, in the proposed text changes to ER Subsection 10.5S.2.2, that the normal and maximum forced evaporation from STP Units 3 and 4 are 34,850 ac-ft/yr and 38,050 ac-ft/yr (page 17 of 17).

Clarify the difference in these values and provide the source for each. Please state the forced evaporation values for STP Units 3 and 4 and provide a reference or a source for these values.

RESPONSE:

The differences noted in the values previously provided for MCR forced evaporation from operation of STP Units 3 and 4 reflect two "annual average" values and two "maximum" values calculated for forced evaporation. The two calculated "annual average" values are (with rounding) approximately 21,600 gpm (approximately 34,850 acre-ft/year) and 23,190 gpm (approximately 37,430 acre-ft/year). The two calculated "maximum" values are (with rounding) approximately 23,570 gpm (approximately 38,050 acre-ft/year) and 49,000 gpm. A description of the differences between these values is provided below.

The source of the MCR forced evaporation values incorporated in the STPNOC response to NRC RAI No. 02.03-06 is Bechtel Calculation No. 25293-000-K0C-ME00-00001, "MCR Thermal Performance Study," Revision 2, effective January 20, 2009 (proprietary). The calculation methodology includes the use of a computer model to simulate MCR thermal performance using the rated plant operation information and historical meteorological data. The simulation covers a period of 59 years, with 8 years of data not used due to the unavailability of certain meteorological data (primarily data on wind speed and cloud cover, making any data that was available for those years unsuitable for use). This proprietary calculation is available for NRC review in the electronic reading room.

Calculated "Annual Average" Values

The value of 21,600 gpm (approximately 34,850 acre-ft/year) is the calculated average annual MCR forced evaporation for STP Units 3 and 4 operating at an assumed load factor of

93 percent. The 23,190 gpm (approximately 37,430 acre-ft/year) value is the calculated average annual MCR forced evaporation for STP Units 3 and 4 operating at an assumed load factor of 100 percent. A load factor of 93 percent is considered to be reasonably representative of normal operations over the life of the units, where one unit is in a refueling outage every 18 months. Thus, the annual average MCR forced evaporation based on a 93 percent load factor is presented to approximate the anticipated (i.e., normal operating condition) average annual forced evaporation over the life of the units. The annual average MCR forced evaporation based on 100 percent load factor is considered to bound annual average MCR forced evaporation during normal operating conditions. This discussion is summarized in the following table.

"Annual Average" MCR Forced Evaporation Value	**Description**
21,600 gpm (34,850 acre-ft/yr)	Annual Average Value for Normal Operating Conditions at 93 percent load factor
23,190 gpm (37,430 acre-ft/yr)	Annual Average Value for Normal Operating Conditions at 100 percent load factor

In the STPNOC response to NRC RAI No. 02.03-06, the average annual values for normal operating conditions at both 93 percent and 100 percent load factors are cited in the proposed markup of ER Section 3.3.1 in gallons per minute. This is appropriate since the purposes of ER Section 3.3.1 include presenting site water consumption during normal operations with consideration for both anticipated and bounding conditions. ER Table 3.3-1 is intended to envelope the Units 3 and 4 water consumption. Thus, the proposed markup of Table 3.3-1 in the STPNOC response to NRC RAI No. 02.03-06 conservatively incorporates (in the "Normal" column) the average annual value assuming a load factor of 100 percent.

Finally, the proposed markup of ER Section 10.5S.2.2 cites the value of 34,850 acre-ft/year as the approximate normal forced evaporation for STP Units 3 and 4. This value is the acre-ft/year equivalent of the average annual value for normal operating conditions at a 93 percent load factor (i.e., 21,600 gpm). Discussion of the annual average based on a 93 percent load factor (as opposed to the 100 percent load factor value) in ER Section 10.5S.2.2 is appropriate since this section is intended to summarize the cumulative impacts of anticipated STP Units 3 and 4 operational water use over the life of the units.

Calculated "Maximum" Values

As stated above, the two calculated "maximum" values are (with rounding) approximately 23,570 gpm (approximately 38,050 acre-ft/year) and 49,000 gpm. The value of 23,570 gpm is the calculated maximum annual MCR forced evaporation for STP Units 3 and 4 operating at an assumed load factor of 100 percent. The value of 49,000 gpm is the calculated maximum daily MCR forced evaporation rate for STP Units 3 and 4 operating at an assumed load factor of 100 percent. (As this is a short-term value, its characterization in units of acre-ft/year is subject to misinterpretation and has no meaningful purpose.) This discussion is summarized in the following table.

"Maximum" MCR Forced Evaporation Value	Description
23,570 gpm (38,050 acre-ft/yr)	Annual Maximum Value for Normal Operating Conditions at 100 percent load factor
49,000 gpm	Daily Maximum Value for Normal Operating Conditions at 100 percent load factor

In the STPNOC response to NRC RAI No. 02.03-06, the proposed markup of ER Section 10.5S.2.2 cites the value of 38,050 acre-ft/year as the approximate maximum forced evaporation for STP Units 3 and 4. This value is the acre-ft/year equivalent of the maximum annual value of 23,570 gpm. Discussion of the maximum annual value in ER Section 10.5S.2.2 is appropriate since this section is intended to summarize the anticipated cumulative impacts of STP Units 3 and 4 operational water use over the life of the units.

ER Table 3.3-1 is intended to envelope the Units 3 and 4 water consumption. Accordingly, the proposed markup of Table 3.3-1 in the STPNOC response to NRC RAI No. 02.03-06 conservatively incorporates the daily maximum value to represent the maximum short-term peak value anticipated during operation of STP Units 3 and 4.

CANDIDATE COLA REVISION:

This response does not affect the proposed ER markups provided in the STPNOC response to NRC RAI No. 02.03-06. However, conforming changes (i.e., changes to conform to those proposed in NRC RAI No. 02.03-06) are needed to ER Sections 5.2.1, 5.2.2.1, and 5.3.1.1, and ER Table 5.2-1. These changes (in MCR forced evaporation rates attributable to STP Units 3 and 4 heat loads) impact and/or are substantively related to other water usage values addressed in detail in the STPNOC response to NRC RAI No. 05.10-04 (provided concurrently with this response). Thus, the conforming changes related to this response are reflected in the markups included in the STPNOC response to NRC RAI No. 05.10-04.

Question Number: 05.10-04

QUESTION:

Provide clarification regarding STPNOC's intent to use only the existing groundwater permit limit of 3000 ac-ft/yr, or to apply for an increase to 3500 ac-ft/yr. If the intent is to apply for an increase in the groundwater permit limit, then provide an analysis of impact.

FULL TEXT (Supporting Information):

Conflicting statements exist in the ER and FSAR regarding the groundwater permit limit and water supplied beyond the limit. In ER Rev 2 Section 5.2.2.2, STP states "During normal operations of STP 3 & 4, STPNOC would use groundwater in excess of that used by STP 1 & 2 up to the current permitted limit of 3000 ac-ft/yr..." and "To meet the proposed maximum or peak groundwater demand ...for STP 3 & 4, STPNOC would supply water needed for STP 3 & 4 UHS makeup in excess of the normal operations groundwater value... by using water stored in the MCR..." In ER Rev 2 Table 5.10-1 STP states, "STPNOC will apply to Coastal Plains Groundwater Conservation District for an increase in the site's current groundwater permit from 3000 acre-feet per year to 3500 acre-feet per year **up to the current permitted limit** with the remainder of the water requirements met by water from the Main Cooling Reservoir (MCR)." [bold by NRC staff]. NRC staff understands that permits are required by the Coastal Plains Groundwater Conservation District (CPGCD) to drill new wells under an existing permit limit, or to amend a permit and increase the permit limit. From STPNOC's statements cited above and others in the ER and FSAR, and from NRC staff's understanding of the CPGCD's rules, it is not clear which permits and permit amendments STPNOC will be seeking.

Will groundwater use be limited to the existing groundwater permit limit of 3000 ac-ft/yr, within the flexibility of the existing permit (e.g., multiple wells, averaging over 3-yr period), during both construction and operation of the proposed units? Is there intent to seek an increase in the permit limit when applying for the permits to construct two new wells or at any time prior to operating the proposed units? If STPNOC's intent is to apply for an increased permit limit, NRC would expect to receive an analysis of incremental increase and overall usage including a discussion of (1) groundwater resource availability, (2) drawdown at property line and at off-site well(s) from long-term normal use and short-term peak usage, (3) recovery time from peak usage, (4) salt water intrusion, and (5) subsidence.

RESPONSE:

Groundwater use will be limited to the existing groundwater permit limit during construction, initial testing, and operation of STP Units 3 and 4. Specifically, based on the results of an updated operating plant (Units 3 and 4) water balance calculation and a new site groundwater use calculation, STPNOC has determined that the existing groundwater permit limit provides adequate water supply for the operation of STP Units 1 and 2 and the construction, initial testing, and operation of STP Units 3 and 4. Thus, STPNOC does not intend to seek an increase in the

permit limit. As detailed further below, affected FSAR and ER sections will be rewritten to reflect this determination.

The aforementioned updated operating plant (Units 3 and 4) water balance calculation results in a number of changes to the water use values presented in ER Table 3.3-1. These changes are indicated in the ER Table 3.3-1 markup provided below. It should be noted that the water use values in ER Table 3.3-1 likely will require further updates as ongoing plant system design progresses. However, there is no reasonable expectation that such updates would necessitate increasing the existing groundwater permit limit. With consideration for such additional updates, ER Table 3.3-1 will be revised to reflect the then-current revision of the site groundwater use calculation in the next routine revision of the COLA following NRC acceptance of this RAI response.

The completion of the updated operating plant (Units 3 and 4) water balance calculation and new site groundwater use calculation encompassed the following major tasks:

1. Update of the projected normalized and peak water uses required for operation of STP Units 3 and 4 (ER Table 3.3-1).

2. Determination of the estimated normalized and peak water demands required for construction and initial testing of STP Units 3 and 4.

3. Re-evaluation of historical (typical) STP Units 1 and 2 water uses to identify potential water conservation opportunities.

4. Determination of the following:

    a. Total normalized water usage for the entire site (i.e., including Units 1 and 2) during construction, initial testing, and operation of STP Units 3 and 4;

    b. Whether sufficient groundwater is available under the existing groundwater permit limit to provide the total normalized water usage for the entire site; and

    c. Available groundwater well pumping capacity and any needed increase via installation of additional well(s) and/or increasing pump capacities of existing wells.

5. Assessment of the water storage capacity necessary to meet the peak site water demands during construction, initial testing, and operation of STP Units 3 and 4.

As detailed further in the updated operating plant (Units 3 and 4) water balance calculation, water uses projected for the operation of STP Units 3 and 4 are derived from system design data as well as from operational (ABWR) water use data for specific systems for which such data is available. The water balance calculation and the new site groundwater use calculation are available for NRC review in the electronic reading room.

In performing the site groundwater use calculation, it was determined that the description of the site groundwater permit limit in the STP Units 3 and 4 COLA requires revision to more accurately reflect the actual groundwater operating permit wording. In a number of COLA sections, the permit limit is stated to be 3000 acre-feet/year and/or 1,860 gpm, the latter of which is intended as an equivalent "normalized" withdrawal rate assuming continuous pumping every minute of every day of each year. The COLA description of the groundwater permit limit expressed in (3000) acre-feet/year reflects a fair approximation of the actual permit limit wording. However, where the permit limit is "normalized" in the COLA to a continuous withdrawal rate in gallons per minute, the resultant value (i.e., 1860 gpm) is based on an assumption that the permit term is exactly 3 years. This assumption does not reflect a slight variance in the operating permit term.

Specifically, the current permit authorizes withdrawal of groundwater from the five (5) site production wells described in ER Section 2.3.1.2.4.3 in an amount not to exceed 9000 acre-feet during the permit term. The permit term is defined as the period from the date of issue – February 7, 2008 – to the expiration date – February 28, 2011 – a period of 3 years and 23 days (accounting for leap year 2008). Although it is clear that the description of the permit limit as "3000 acre-feet/year" is a reasonable approximation for purposes of summary discussion, normalizing this limit over the actual permit term (i.e., accounting for the "extra" 23 days in the existing permit term) results in a calculated "normalized" withdrawal rate limit of 1822 gpm rather than the 1860 gpm cited in the COLA.

There is a reasonable likelihood that future groundwater permits may have similar slight variances in the permit term. Therefore, to preclude the need to revise the licensing basis following each future renewal of the permit, references in the COLA to "1860 gpm" (as the permit limit value) will be clarified as described above.

CANDIDATE COLA REVISIONS:

The updated operating plant (Units 3 and 4) water balance calculation and new site groundwater use calculation described above affect the following FSAR and ER sections and tables.

Affected FSAR Sections/Tables	Affected ER Sections/Tables		
2.4S.12.1.6	Table 1.2-4	3.3.3	5.3.1.1
2.4S.12.3.3	2.3.1.2.4.3	Table 3.3-1	5.3.3.1.3
2.4S.12.6	2.3.1.2.6	4.2.2	5.8.2.2.7
Table 2.4S.12.3	2.3.1.3	4.2.2.1	Table 5.10-1
	2.3.2.2.1	4.2.4	10.1.1.2
	2.3.2.3	Table 4.2-3	10.1.2.2
	Table 2.3.2-18	4.4.2.2.7	10.1.4 (new)
	Table 2.3.2-19	4.4.4	Table 10.1-2
	2.9S.1	5.2.1	Table 10.4-2
	Table 2.9S-1	5.2.2.1	Table 10.4-4
	3.3	5.2.2.2	10.5S.1.2
	3.3.1	5.2.3.2	10.5S.2.2
	3.3.2	Table 5.2-1	

The specific changes to the affected ER sections and tables are presented in the text markups below with changes indicated with gray shading. Since the information requested in this RAI question is substantively similar to that requested in NRC RAI No. 02.04.12-36 related to the STP Units 3 and 4 Final Safety Analysis Report (FSAR), the FSAR markups to incorporate and/or conform to this response are provided in the STPNOC response to NRC RAI No. 02.04.12-36.

It is further noted that the STPNOC responses to RAI Nos. 02.04.12-36 (safety), 03.03-01, 05.02-07, and 05.02-08 also involve related changes to certain ER sections affected by this response. Thus, those changes too are reflected in the markups below.

ER Table 1.2-4

STPNOC proposes that the table entry for Item 4.3 in ER Table 1.2-4 be revised as follows:

Table 1.2-4 Authorizations/Permits Required for Operation (Continued)

4.3	CPGCD	Rules of the CPGCD, Chapter 3, Subchapter A, B	Groundwater Well Permit	Installation and operation of ~~N~~new groundwater well(s) ~~operation and increase in permitted amount~~	02/2011

ER Section 2.3.1.2.4.3

STPNOC proposes that the second, third, and fourth paragraphs of ER Section 2.3.1.2.4.3 would be replaced as follows:

~~Table 2.3.1-22 presents the combined monthly groundwater withdrawals from the five production wells between 1995 and 2006. STPNOC is currently permitted to use up to 3000 acre-ft of groundwater. As the table indicates, annual groundwater use by STP 1 & 2 is between 1200 and 1300 acre-feet. Therefore, over 1700 acre-ft (1050 gpm) of groundwater could be available for use by STP 3 & 4. Water demand could be met by increasing the yield of the existing wells or installing new wells. STPNOC is currently evaluating the possibility of permitting and installing additional groundwater wells at the STP site. Once the evaluation has been completed, the NRC would be notified if additional wells are proposed. Also, STPNOC would submit the necessary well permit applications to the Coastal Plains Groundwater Conservation District (CPGCD) and TCEQ as required for approval. A detailed evaluation of groundwater availability and estimates of aquifer drawdown, water conservation measures, and identification of alternative sources, if practicable, will be addressed as part of the detailed engineering for STP 3 & 4.~~

~~Groundwater is projected to be the primary source of makeup water for the STP 3 & 4 UHS, condensate makeup, radwaste and fire protection systems and the source of potable~~

~~water for STP 3 & 4. These systems are predicted to require typical groundwater consumption of approximately 2003 acre-ft per year (1242 gpm), whereas the peak consumption (i.e., outages) is expected to be as great as 4108 gpm. Short-term water demand beyond the current capacity of the existing wells could be met by increasing the yield of the existing wells, installing new wells, or withdrawing the necessary additional water from the MCR. A detailed evaluation of groundwater availability and estimates of aquifer drawdown, water conservation measures, and identification of alternative sources, if practicably, will be addressed as part of the detailed engineering for STP 3 & 4.~~

~~The potential impacts to the local groundwater aquifer system as the result of plant expansion are discussed in Subsection 2.3.2.2 and Section 5.2.~~

Based on the results of an operating plant (Units 3 and 4) water balance calculation (Reference 2.3.1-42) and a site groundwater use calculation (Reference 2.3.1-43), STPNOC has determined that the STP site groundwater operating permit limit provides adequate groundwater supply for water uses required for the operation of STP Units 1 and 2 and the construction, initial testing, and operation of STP Units 3 and 4. The permit allows groundwater withdrawals from the five site production wells discussed above up to a limit of 9000 acre-feet over the permit term of approximately 3 years. For discussion purposes, this permit limit may be described herein as "approximately 3000 acre-feet/year," recognizing that groundwater withdrawal in a single year may exceed 3000 acre-feet provided that total withdrawals over the permit term do not exceed 9000 acre-feet. As a point of reference, if the permit limit were exactly 3000 acre-feet/year (which is not necessarily the case due to slight variances in the permit term with each permit renewal), the equivalent "normalized" withdrawal rate assuming continuous pumping every minute of every day of each year would be approximately 1860 gpm.

Historical groundwater withdrawal rates associated with operation of Units 1 and 2 are provided in Table 2.3.1-22 and Table 2.3.2-18. This data shows that from 2001 through 2006, annual groundwater use for operation of STP Units 1 and 2 averaged approximately 798 gpm (approximately 1288 acre-feet/year). A small but not insignificant portion of this amount has been diverted to the Main Cooling Reservoir (MCR) as a result of manual operation of the groundwater well pump and header system. With the installation of appropriate automated groundwater well pump and header system controls, this diverted groundwater would be available for use by Units 3 and 4. However, as documented in the site groundwater use calculation (Reference 2.3.1-43), it has been determined that even if this water were not available to Units 3 and 4, the existing STP site groundwater operating permit limit provides adequate groundwater supply for water uses required for the operation of STP Units 1 and 2 and the construction, initial testing, and operation of STP Units 3 and 4.

Water uses projected for the operation of STP Units 3 and 4 are derived from system design data as well as from operational water use data for specific systems for which such data is available (Reference 2.3.1-42). Conservative water use projections for simultaneous operation of both STP Units 3 and 4 are summarized in Table 2.3.2-19 and

Table 3.3-1, and include a total estimated normalized groundwater demand of approximately 975 gpm (approximately 1574 acre-feet/year), and approximately 3434 gpm for maximum short-term steady-state conditions.

Water uses for the construction (including concrete production) and initial testing of STP Units 3 and 4 were estimated for each month during the construction period through the commencement of unit operation (Reference 2.3.1-43). As documented in the site groundwater use calculation (Reference 2.3.1-43), monthly construction water uses are projected to range from a normalized rate of approximately 10 gpm to approximately 228 gpm. Similarly, monthly water uses associated with initial testing of STP Units 3 and 4 are projected to range from a normalized rate of approximately 47 gpm to approximately 491 gpm.

When evaluating whether the total site groundwater demand can be satisfied by the available groundwater supply, the groundwater use values quantified above cannot simply be added since the timing and duration of the use must be considered. For example, water uses associated with construction and initial testing of STP Unit 4 will "overlap" with those for operation of Units 1, 2, and 3. Thus, the site groundwater use calculation (Reference 2.3.1-43) considers the schedule projected for each use, and evaluates the total site groundwater usage at each point in time from the commencement of STP Units 3 and 4 construction until both Units 3 and 4 are in operation (i.e., Units 1, 2, 3 and 4 are operating simultaneously). With consideration for the need to maintain water storage capacity to provide for peak site water demands, this evaluation confirms that total site groundwater demand remains below the existing site groundwater permit limit during construction, initial testing, and operation of STP Units 3 and 4.

The design groundwater withdrawal capacity associated with the five (5) site production wells covered by the existing site groundwater operating permit is described in Table 2.3.2-17. Of the total 1950 gpm design capacity indicated in the table, not more than approximately 1650 gpm is considered to be available based on operating experience and the fact that use of the Nuclear Training Facility (NTF) pump is limited to providing fire protection water for the NTF. Therefore, STPNOC intends to install at least one additional site groundwater well with a design capacity of 500 gpm. As documented in the site groundwater use calculation (Reference 2.3.1-43), this additional capacity will allow for sufficient groundwater withdrawal to meet water uses required for: (1) operation of STP Units 1 and 2 and the construction, initial testing, and operation of STP Units 3 and 4; and (2) potential temporary capacity reduction as a result of equipment failure/unavailability. Any additional wells would be properly permitted under applicable Coastal Plains Groundwater Conservation District (CPGCD) and TECQ requirements, and would not involve a request for an increase in the permit limit.

As with the existing five (5) site production wells, any new well(s) would be installed to depths within the deep portion of the Chicot Aquifer. The potential impacts to the local groundwater aquifer system as the result of the construction, initial testing, and operation of STP Units 3 and 4 are discussed in Section 4.2 and Section 5.2.

ER Section 2.3.1.2.6

STPNOC proposes that the last paragraph of ER Section 2.3.1.2.6 would be moved to Section 3.3.1 with revision to reflect the applicability of the statement to all site groundwater production wells. This would result in the following deletion to ER Section 2.3.1.2.6:

> ~~The groundwater supply wells to be installed for STP 3 & 4 are not safety-related sources of water, because the UHS has a 30-day supply of water, which is sufficient for plant shutdown without a supplementary water source.~~

ER Section 2.3.1.3

STPNOC proposes that two references be added to the end of the list of references in ER Section 2.3.1.3 as follows:

> 2.3.1-42 "Plant Water Balance," Fluor Nuclear Power Calculation No. U7-SITE-G-CALC-DESN-2001.
>
> 2.3.1-43 "Site Groundwater Use for Construction, Initial Testing, Startup, and Operations," Fluor Nuclear Power Calculation No. U7-SITE-G-CALC-DESN-2002.

ER Section 2.3.2.2.1

STPNOC proposes that both paragraphs of ER Section 2.3.2.2.1 would be revised as follows:

> STP 1 & 2 groundwater use includes makeup water for the Essential Cooling Pond (ECP) process water, potable water, and supply for the fire protection system. Table 2.3.2-17 lists onsite production wells, while Figure 2.3.2-4 identifies their location. With the clarification provided in Section 2.3.1.2.4.3, ~~T~~the STP site~~'s current total permitted (CPGCD) withdrawal rates are a~~ groundwater operating permit limit for withdrawals from these wells is approximately 3000 acre-feet/~~per~~ year~~(1860 gpm)~~. These wells provide makeup water for the ECP for STP 1 & 2, potable water system, and plant processes. The wells extend into the Chicot Aquifer, range in depth from 600 to 700 feet, and have design yields of 200 to 500 gpm. The total average annual usage for 2001 ~~to~~through 2006 was ~~from 745 to 863~~approximately 798 gpm, as indicated in Table 2.3.2-18.
>
> Table 2.3.2-19 shows normal and maximum projected groundwater use for STP 3 & 4. Groundwater will be used to supply water for service water system makeup, the potable water system, the demineralized water system, the fire protection system, and for miscellaneous uses. Based on the results of an operating plant (Units 3 and 4) water balance calculation (Reference 2.3.2-34) and a site groundwater use calculation (Reference 2.3.2-35), STPNOC has determined that the STP site groundwater operating permit limit provides adequate groundwater supply for water uses required for the operation of STP Units 1 and 2 and the construction, initial testing, and operation of STP

Units 3 and 4. As detailed further in Section 2.3.1.2.4.3, STPNOC intends to install at least one additional site groundwater well with a design capacity of 500 gpm. Any additional wells would be properly permitted under applicable~~Groundwater needed to supply STP 1 & 2 and STP 3 & 4 will be obtained from existing site wells. Figure 2.3.2-4 indicates the location of the existing STP site wells. Short-term water demand beyond the current capacity of the existing wells could be met by increasing the yield of the existing wells, installing new wells, or withdrawing the necessary additional water from the MCR. STPNOC is currently evaluating the possibility of permitting and installing additional groundwater wells at the STP site. Once the evaluation has been completed, the NRC would be notified if additional wells are proposed. Also, STPNOC would submit the necessary well permit applications to the~~ Coastal Plains Groundwater Conservation District (CPGCD) and TCEQ requirements, and would not involve a request for an increase in the existing permit limit~~as required for approval~~. ~~A detailed evaluation of groundwater availability and estimates of aquifer drawdown, water conservation measures, and identification of alternative sources, if practicable, will be addressed as part of the detailed engineering for STP 3 & 4.~~ As with the existing five (5) site production wells, any new well(s) would be installed to depths within the deep portion of the Chicot Aquifer. The potential impacts to the local groundwater aquifer system as the result of the construction, initial testing, and operation of STP Units 3 and 4 are discussed in Section 4.2 and Section 5.2.

ER Section 2.3.2.3

STPNOC proposes that the numbering and typographical errors in the last three references be corrected, and two references be added to the end of the list of references in ER Section 2.3.2.3, as follows:

2.3.2-~~29~~31 "Historical Groundwater Use Summary for 1974-2004 by County," TWDB 2007~~a~~. Available at www.twdb.state.tx.us/wushistorical, accessed July 26, 2007.

2.3.2-~~25~~32 "Sole Source Aquifers, EPA Region 6," EPA 2007b, May 9. Available at www.epa.gov/region 6/water/swp/ssa/maps.htm, accessed May 15, 2007.

2.3.2-~~31~~33 "Public Water Supplies within 10 miles of STP," John Meyer, Texas Commission on Environmental Quality, April 25, 2007.

2.3.2-34 "Plant Water Balance," Fluor Nuclear Power Calculation No. U7-SITE-G-CALC-DESN-2001.

2.3.2-35 "Site Groundwater Use for Construction, Initial Testing, Startup, and Operations," Fluor Nuclear Power Calculation No. U7-SITE-G-CALC-DESN-2002.

ER Table 2.3.2-18

STPNOC proposes that the inadvertent typographical error in the total gallons used in 2005 be corrected in Table 2.3.2-18 as follows:

Table 2.3.2-18 STP 1 & 2 Groundwater Use (gallons)

Month	2001	2002	2003	2004	2005	2006
⋮	⋮	⋮	⋮	⋮	⋮	⋮
Total (Gallons/year)	453,740,667 (863 gpm)	391,479,855 (745 gpm)	426,180,533 (811 gpm)	398,540,117 (758 gpm)	422,~~363~~333,662 (804 gpm)	423,935,565 (807 gpm)

ER Table 2.3.2-19

STPNOC proposes that Table 2.3.2-19 and Note [1] below the table be revised as follows:

Table 2.3.2-19 Projected Groundwater Use by STP 3 & 4 in GPM

Well Water Supply [1]	Normal Case (gpm)	Maximum Case (gpm)
Total well water demand	~~1,242~~975	~~4,108~~3,434
Power plant makeup water (UHS), for both units	885	3,203
Well water for power plant makeup/use	~~33~~250	~~80~~591
Total groundwater consumption	~~1,242~~975	~~4,108~~3,434

[1] Values are from ~~Figure~~Table 3.3-1, Section 3.3.1.

ER Section 2.9S.1

STPNOC proposes that the list of references in ER Section 2.9S.1 be revised as follows:

2.9S-2 "~~2002~~ Texas ~~Commission on Environmental Quality~~Water Development Board, ~~Annual~~Calendar Year 2002 Water Use ~~Reports~~ (Combined Form), STP (South Texas Project Nuclear Operating Company)," February 14, 2003.

2.9S-3 "~~2003~~ Texas Water Development Board, ~~TCEQ/TWDB Annual~~Calendar Year 2003 Water Use ~~Reports~~ (Combined Form), STP (South Texas Project Nuclear Operating Company)," February 24, 2004.

2.9S-4 "~~2004~~ Texas Water Development Board, ~~TWDB Annual~~Industrial Water Use ~~Reports~~Survey for the Calendar Year Ending December 31, 2004, STP (South Texas Project Nuclear Operating Company)," February ~~23~~22, 2005.

2.9S-5 "~~2005~~ Texas Water Development Board, TWDB ~~Annual~~Industrial Water Use ~~Reports~~Survey for the Calendar Year Ending December 31, 2005, STP (South Texas Project Nuclear Operating Company)," February ~~22~~16, 2006.

2.9S-6 "~~2006~~ Texas Water Development Board, ~~TWDB Annual~~Industrial Water Use ~~Reports~~Survey for the Calendar Year Ending December 31, 2006, STP (South Texas Project Nuclear Operating Company)," February 22, 2006~~7~~.

...

2.9S-15 "Texas Water Development Board, Calendar Year 2001 Water Use (Combined Form), STP (South Texas Project Nuclear Operating Company)," February 20, 2002.

2.9S-16 "Texas Commission on Environmental Quality, TCEQ Annual Water Use Reports – 2004, South Texas Project Electric Generating Station," February 23, 2005.

2.9S-17 "Texas Commission on Environmental Quality, TCEQ Annual Water Use Reports – 2005, South Texas Project Electric Generating Station," February 22, 2006.

2.9S-18 "Texas Commission on Environmental Quality, TCEQ/TWDB Annual Water Use Reports – 2006, South Texas Project Electric Generating Station," February 22, 2007.

ER Table 2.9S-1

STPNOC proposes that the entries under the subheading "Water" in Table 2.9S-1 be revised as follows:

Table 2.9S-1 Plant Parameters and Site Characteristics for STP 1 & 2

Parameter	Quantity and Units	Explanation/Source
Water		
River water consumptive use	37,100 acre-ft/year (3-year average [calendar years 2004-2006] listed due to recent ~~increases in~~ Units 1 and 2 power up-rates)	Source: References 2.9S-~~2S~~16 to 2.9S-~~6~~18
Groundwater withdrawal	1,300 acre-ft/year (~~5~~6-year approximate average [calendar years 2001-2006])	Source: References 2.9S-2 to 2.9S-6, and 2.9S-15

ER Section 3.3

STPNOC proposes that the last bulleted paragraph of ER Section 3.3 would be revised as follows:

- Onsite wells supply water needs for the power block operational uses, fire protection system, potable and sanitary water system (PSW), and the UHS. As detailed further in Section 2.3.1.2.4.3, STPNOC intends to install at least one additional site groundwater well with a design capacity of 500 gpm. Any additional wells would be properly permitted under applicable~~STPNOC is currently evaluating the possibility of permitting and installing additional groundwater wells at the STP site. Once the evaluation has been completed, the NRC would be notified if additional wells are proposed. Also, STPNOC would submit the necessary well permit applications to the~~ Coastal Plains Groundwater Conservation District (CPGCD) and TCEQ requirements, and would not involve a request for an increase in the existing groundwater operating permit limit~~as required for approval~~.

ER Section 3.3.1

STPNOC proposes that the second and third paragraphs of ER Section 3.3.1 would be revised as follows:

The MCR loses water from evaporation and seepage and gains water through makeup from the Colorado River and rainfall. Surface water consumptive use due to STP 3 & 4 heat loads during normal operating conditions is estimated to be approximately 23,170 gpm. Water uses projected for the operation of STP Units 3 & 4 are derived from system design data as well as from operational water use data for specific systems for which such data is available (Reference 3.3-4). Conservative water use projections for simultaneous operation of both STP Units 3 and 4 are summarized in Table 3.3-1, and include a total estimated normalized groundwater demand of approximately 975 gpm (approximately 1574 acre-feet/year), and approximately 3434 gpm for maximum short-term steady-state conditions.~~STP 3 & 4 groundwater use is approximately 1,250 gpm on average, with a maximum of approximately 4,150 gpm.~~ During normal operation, approximately ~~550~~391 gpm of plant effluent water (UHS basin blowdown, filter backwash, etc.) is discharged to the MCR as surface water. Table 3.3-1 identifies the normal and maximum water and effluent streams for STP 3 & 4, and Figure 3.3-1 provides a diagram to illustrate the normal operation flows.

The UHS for STP 3 & 4 will consist of mechanical draft cooling towers that receive makeup water from the well water system. The groundwater supply wells for STP 3 & 4 are not safety-related sources of water, because the UHS has a 30-day supply of water, which is sufficient for plant shutdown without a supplementary water source. During normal operation, the UHS will be evaporating an expected 566 gpm (2 units) of water, causing an increase in UHS basin water total dissolved solids. Water from the UHS is

blown down to the MCR to keep the total dissolved solids at acceptable levels, with the discharged water to be made up from the onsite well water system.

ER Section 3.3.2

STPNOC proposes that the sixth paragraph of ER Section 3.3.2 would be revised as follows:

> The MWP System will meet the demineralized water demand for STP 3 & 4 under normal and maximum operating conditions. Table 3.3-1 indicates the~~Under normal operation, each unit has an overall~~ estimated demineralized water demand for both units under normal operating and maximum short-term steady-state conditions~~of approximately 100 gpm~~. These demineralized water demand projections are based on actual operational water use data for similarly designed systems (Reference 3.3-4), and are well bounded by MWP System capacity.~~To support STP 3 & 4, the MWP System will provide an average of approximately 200 gpm of demineralized water. This is the capacity of having~~ Specifically, operating with a single reverse osmosis train running in a two-pass series configuration, the MWP System has the capacity to provide up to approximately 200 gpm of demineralized water. ~~Under emergency and abnormal operation, each unit has an estimated demineralized water demand of approximately 400 gpm. To support one unit at maximum and one unit under normal operation, t~~The MWP System ~~will~~ is sized to provide a continuous maximum flow of approximately 500 gpm of demineralized water.

ER Section 3.3.3

STPNOC proposes that one reference be added to the end of the list of references in ER Section 3.3.3 as follows:

> 3.3-4 "Plant Water Balance," Fluor Nuclear Power Calculation No. U7-SITE-G-CALC-DESN-2001.

ER Table 3.3-1

STPNOC proposes that Table 3.3-1 be revised as shown in the following markup to reflect the updated operating plant (Units 3 and 4) water balance calculation described above. This markup also reflects changes resulting from and described in the STPNOC response to NRC RAI No. 03.03-01 (provided concurrently with this response). The markup of Stream 9 in this table reflects a similar markup in the STPNOC response to NRC RAI No. 02.03-06 (STPNOC Letter No. U7-C-STP-NRC-090006 dated January 22, 2009), and is reiterated here for clarity.

Table 3.3-1 STP 3 & 4 Water Flow Table

Stream	Stream Description	Normal [1] (gpm)	Maximum [1, 2, 7] (gpm)	Comments
	Groundwater (Well) Streams			
2	Plant Well Water Demand	~~1,242~~975	~~4,108~~3,434	[11]
8	Well Water Demand for UHS System Makeup	885	3,203	[11]
4	UHS Tower Evaporation	566	2,122	
5	UHS Tower Blowdown	~~283~~290	1,058	[4]
6	UHS Tower Circulating Water Flow	85,590	128,400	
7	UHS Tower Drift	5	10	[3]
13	UHS Seepage	24	13	
1	Well Water for Power Plant Makeup/Use	~~33~~250	~~80~~591	[6]
15	Potable Water	~~25~~40	~~100~~140	
16	Sanitary Waste	~~25~~40	~~100~~140	
19	Filter Effluent	~~33~~250	~~80~~591	
20	Filter Backwash Water	~~17~~3	~~40~~5	
21	Filter Backwash Waste	~~17~~3	~~40~~5	
27	Demineralized Water to Various Users	~~20~~022	~~50~~048	[8]
22	Reverse Osmosis Influent	~~30~~033	~~75~~072	
23	Reverse Osmosis Effluent	~~20~~022	~~50~~048	
24	Reverse Osmosis Reject	~~10~~011	~~25~~024	
26	Mixed Bed Effluent	~~20~~022	~~50~~048	
34	Liquid Radwaste Treatment Influent	~~40~~28	~~280~~260	
30	Fire Water System Makeup	10	10	
32	Oil/Water Separator Influent	15	15	
28	Equipment/Floor Washdown	5	5	
39	Consumptive Losses	~~11~~017	~~14~~538	
40	Demineralized Users Miscellaneous Drains Influent	~~50~~5	~~75~~10	
42	Startup/Flush Pond	0	0	[5]
	MCR Streams			
9	MCR Forced Evaporation from STP 3 & 4	~~23,170~~23,190	~~23,427~~49,000	[12]
11	MCR Circulating Water Flow	2.4×10^6	2.4×10^6	
12	MCR Seepage	0	0	[9]
14	MCR Rainfall	0	0	[9]
43	MCR Blowdown to Colorado River	0	138,240	[10]
44	MCR Makeup to UHS (Backup to Wells)	0	0	[11]

Table 3.3-1 STP 3 & 4 Water Flow Table (Continued)

Stream	Stream Description	Normal [1] (gpm)	Maximum [1, 2, 7] (gpm)	Comments
	Surface Water (Colorado River) Streams			
3	Total Required River Water to MCR	~~22,692~~ 22,799	~~24,867~~ 47,489	
43	Total Discharge from MCR to River	0	138,240	[10]
	Plant Effluent Streams			
10	Final Effluent Discharge Line to MCR	~~530~~391	~~1,818~~1,511	
35	Treated Liquid Radwaste	~~40~~28	~~280~~260	
37	Wastewater Retention Basin Discharge	~~18~~233	~~38~~053	
41	Demineralized Users Miscellaneous Drains Discharge	~~50~~5	~~75~~10	
17	Treated Sanitary Waste	~~25~~40	~~100~~140	
36	Total Low Volume Waste	~~13~~228	~~30~~543	
29	Equipment/Floor Washdown Waste	5	5	
31	Fire Water System Losses	10	10	
33	Oil/Water Separator Effluent	15	15	

Notes:
1. The flow rate values are for STP 3 & 4.
2. These flows are not necessarily concurrent.
3. The cooling tower drifts are 0.005% of the tower circulating water flow for normal operation and 0.01% of the average tower circulating water flow for the 30 days following a design basis accident for maximum operation.
4. The UHS cooling towers are assumed operating at three cycles of concentration.
5. Startup flushes and startup pond discharge would occur only during the initial plant startup phase and potentially after unit outages when system flushes are required.
6. Makeup water for demineralized water, potable water, and fire protection water, and makeup to the UHS basin would be from site wells. The MCR makeup will be from the Colorado River.
7. Maximum evaporation from the UHS towers would occur during emergency, hot standby, hot standby with loss of AC, or shutdown conditions. All other maximum flows are during the power block peak demands for makeup water.
8. For the normal condition, the reverse osmosis system is operating in a two-pass configuration, in maximum conditions the reverse osmosis is operating in a single-pass parallel configuration.
9. The rainfall and seepage have been taken to be 0 gpm because STP 1 & 2 has already taken rainfall and seepage in consideration for its plant water balance (Reference 3.3-2). The addition of STP 3 & 4 has no impact on rainfall and insignificant impact on the seepage rates.
10. The MCR has the ability to discharge water to the Colorado River at rates up to a maximum of 138,240 gpm (200 million gallons per day) in accordance with the existing Texas Pollutant Discharge Elimination System (TPDES) permit (Reference 3.3-3). The MCR has been blowndown infrequently during the past 20 years. Makeup water to the MCR during periods of blowdown evolution is not considered since the makeup requirements depend on the MCR water level and river flows.
11. These maximum demands are estimated based on one unit in a planned refueling outage, and the second unit in a forced outage using worst case relative humidity. ~~Using average relative humidity, demands for plant well water and UHS makeup are estimated to reduce to 3,305 gpm and 2,400 gpm, respectively.~~ If the demand is higher than the permitted well water levels, UHS makeup for one or both units will be provided from the MCR.
12. The forced evaporation shown includes STP 3 & 4 only. The natural evaporation of the MCR is constant and is not impacted by the number of units at the STP site. The natural evaporation of the MCR is not included in the discussion of surface water consumption in section 3.3.1.
13. Minimum water availability has no impact on the water balance for STP 3 & 4. The MCR accommodates fluctuations in makeup water availability. Change in the MCR level does not significantly impact the evaporation.
14. Details on groundwater sources and construction requirements for plant water use are discussed in Sections 2.3, 4.2, and 3.9S. Information regarding STP 1 & 2 plant water use can be found in Reference 3.3-2.

ER Section 4.2.2

STPNOC proposes that ER Section 4.2.2 would be revised as follows:

~~Because of the presence of~~The existing five (5) site groundwater production wells ~~(~~are indicated in Figure 2.3.2-4~~7) at the STP site, an evaluation of their production capacity and current use was performed to determine if these wells would produce an adequate supply of water for use during construction~~. A description of the groundwater underlying the STP site is provided in Subsection 2.3.1.2.2. A description of current groundwater use at STP 1 & 2 is provided in Subsection 2.3.2.2 and Table ~~2.9-1~~2.3.2-18.

~~STP estimates that groundwater would be used at a peak or maximum rate of approximately 1200 gpm (Subsection 2.3.1.2.6) during construction with normal demands being much less than maximum use. Groundwater would be used during construction for personal consumption and use, concrete batch plant operation, concrete curing, cleanup activities, dust suppression, placement of engineered backfill, and piping hydrotests and flushing (Subsection 2.3.1.2.6).~~

Based on the results of an operating plant (Units 3 and 4) water balance calculation (Reference 4.2-8) and a site groundwater use calculation (Reference 4.2-9), STPNOC has determined that the STP site groundwater operating permit (Reference 4.2-5) limit provides adequate groundwater supply for water uses required for the operation of STP Units 1 and 2 and the construction, initial testing, and operation of STP Units 3 and 4. The permit allows groundwater withdrawals from the five site production wells up to a limit of 9000 acre-feet over the permit term of approximately 3 years. For discussion purposes, this permit limit may be described herein as "approximately 3000 acre-feet/year," recognizing that groundwater withdrawal in a single year may exceed 3000 acre-feet provided that total withdrawals over the permit term do not exceed 9000 acre-feet. As a point of reference, if the permit limit were exactly 3000 acre-feet/year (which is not necessarily the case due to slight variances in the permit term with each permit renewal), the equivalent "normalized" withdrawal rate assuming continuous pumping every minute of every day of each year would be approximately 1860 gpm.

As discussed in Subsection 2.3.2, annual groundwater use ~~at~~for operation of STP Units 1 and 2 from 2001 ~~to~~through 2006 averaged approximately 798 gpm (approximately ~~1286~~1288 acre-feet/year). ~~from Well 5, 6, 7, 8, and the NTF well. Based on the STP site's current permitted withdrawal amount of 1860 gpm (3000 acre-feet/year) (Subsection 2.3.2), approximatly 1060 gpm remaining under the site's existing groundwater permit will be available for construction use. STPNOC has determined that under normal construction conditions STP 3 & 4 can be built using this amount. STPNOC estimates the remainder of the 1200 gpm demand for construction activities during maximum use conditions could be met by increasing water conservation methods. STPNOC is currently evaluating the possibility of permitting and installing additional groundwater wells at the STP site. The NRC would be notified if additional wells are proposed. Also, STPNOC would submit the necessary well permit applications to the~~

~~Coastal Plains Groundwater Conservation District (CPGCD) and TCEQ as required for approval. Therefore, CPGCD would be aware of potential impacts to nearby groundwater users.~~ A small but not insignificant portion of this amount has been diverted to the Main Cooling Reservoir (MCR) as a result of manual operation of the groundwater well pump and header system. With the installation of appropriate automated groundwater well pump and header system controls, this diverted groundwater would be available for construction, initial testing, and operation of Units 3 and 4. However, as documented in the site groundwater use calculation (Reference 4.2-9), it has been determined that even if this water were not available to Units 3 and 4, the existing STP site groundwater operating permit limit provides adequate groundwater supply for water uses required for the operation of STP Units 1 and 2 and the construction, initial testing, and operation of STP Units 3 and 4.

Groundwater would be used during construction and initial testing of STP Units 3 and 4 for personal consumption and use, concrete batch plant operation, concrete curing, cleanup activities, dust suppression, placement of engineered backfill, and piping flushing and hydrostatic tests. Water uses for the construction and initial testing of STP Units 3 and 4 were estimated for each month during the construction period through the commencement of unit operation (Reference 4.2-9). As documented in the site groundwater use calculation (Reference 4.2-9), monthly construction water uses are projected to range from a normalized rate of approximately 10 gpm to approximately 228 gpm. Similarly, monthly water uses associated with initial testing of STP Units 3 and 4 are projected to range from a normalized rate of approximately 47 gpm to approximately 491 gpm.

When evaluating whether the total site groundwater demand can be satisfied by the available groundwater supply, the site groundwater use calculation (Reference 4.2-9) considers the schedule projected for each use, and evaluates the total site groundwater usage at each point in time from the commencement of STP Units 3 and 4 construction until both Units 3 and 4 are in operation (i.e., Units 1, 2, 3 and 4 are operating simultaneously). With consideration for the need to maintain water storage capacity to provide for peak site water demands, this evaluation confirms that total site groundwater demand remains below the existing site groundwater permit limit during construction, initial testing, and operation of STP Units 3 and 4.

As discussed in Section 2.3.2, the design groundwater withdrawal capacity associated with the five site production wells covered by the existing site groundwater operational permit is 1950 gpm. Of the total 1950 gpm design capacity, not more than approximately 1650 gpm is considered to be available based on operating experience and the fact that use of the Nuclear Training Facility (NTF) pump is limited to providing fire protection water for the NTF. Therefore, STPNOC intends to install at least one additional site groundwater well with a design capacity of 500 gpm. As with the existing five site production wells, any new well(s) would be installed to depths within the deep portion of the Chicot Aquifer. As documented in the site groundwater use calculation (Reference 4.2-9), this additional capacity will allow for sufficient groundwater withdrawal to meet water uses required for: (1) operation of STP Units 1 and 2 and the

construction, initial testing, and operation of STP Units 3 and 4; and (2) potential temporary capacity reduction as a result of equipment failure/unavailability. Any additional wells would be properly permitted under applicable Coastal Plains Groundwater Conservation District (CPGCD) and TECQ requirements, and would not involve a request for an increase in the existing permit limit.

As discussed in Subsection 2.3.2, the site's five (5) production wells provide water from the deep portion of the Chicot Aquifer (well depths between 600 and 700 feet) for STP Units 1 and 2 operations, the NTF, and for the STP Visitor Center (located within the NTF). ~~As discussed in Subsection 2.3.2,~~ STP Units 1 ~~&~~and 2 currently use this water ~~from five groundwater wells within the deep portion of the Chicot Aquifer~~ for cooling, condensing, and refrigeration; process and washdown; boiler feed; air-conditioning; sanitary and drinking; and other plant activities. A sixth well located at the east entrance to the STP Units 1 and 2 site off FM 521 has been plugged and abandoned. An onsite pump test on Well 5 installed to a depth of 700 feet in the deep aquifer portion of the Chicot Aquifer yielded 50,000 gpd/ft (6680 ft^2/day). However, as indicated in Table 2.3.1-16, lower transmissivity values were calculated for Well 6 and Well 7. Therefore, an average transmissivity value of 33,245 gpd/ft (4444 ft^2/day) was used in the calculations. No values for the coefficient of storage ~~was~~were determined for these wells, so the values used are those for Well 5. The specific capacity of Well 5 was 10 gallons per minute per foot (gpm/ft) of drawdown. The average permeability of the deep aquifer beneath the site was calculated to be 35 ft/day (Reference 4.2-2). The hydrologic parameters for the modeling of potential groundwater use impacts using a confined aquifer scenario for the deeper portion of the Chicot Aquifer are included in Table 4.2-3. Subsection 2.3.1 describes the confining unit separating the shallow portion of the Chicot Aquifer from the deeper portion of the Chicot as being confined. Therefore, the results of using a confined scenario would represent STPNOC's current knowledge of the site conditions.

~~STP would obtain water for various proposed standard construction uses from the existing deep aquifer zone main water production wells (Wells 5, 6, and 7). Currently, water from the deep aquifer is supplied for STP 1 & 2 operations, the Nuclear Training Facility, and for the STP Visitor Center (located within the Nuclear Training Facility) by five of the site's wells installed to a depth of 600 to 700 feet (see Subsection 2.3.2 Table 2.3.2-15).~~

~~Groundwater use during construction would be in accordance with STPNOC's existing groundwater permit (Reference 4.2-5).~~ The upper shallow aquifer is primarily used for livestock watering and other low-yield requirements. The upper shallow aquifer is isolated from the surface waters by surficial clays and from the lower aquifer units by several confining units. As discussed in Subsection 2.3.2, most well water users near STP do not use the upper shallow aquifer as a source for drinking water because of its low yield. The deep confined aquifer is used as the primary source of water for the region due to higher aquifer yield. Therefore, STPNOC concludes that impacts due to pumping from the STP site's production wells during construction activities to the

shallow portion of the Chicot Aquifer would be SMALL and would not warrant mitigation.

As indicated above, construction and initial testing of STP Units 3 and 4 will result in an~~The~~ increase in the average groundwater pumping rate (not to exceed the existing permit limit) as compared to that currently required to supply the needs of STP Units 1 and 2~~ to the permitted maximum amount allowed by the CPGCD would allow STPNOC to use existing site wells currently used to supply part of STP 1 & 2's water requirements to also supply the water required during construction activities for STP 3 & 4~~. The wells located in the deeper portion of the Chicot Aquifer were evaluated to determine any potential impact to wells located in the vicinity of the STP site within the same portion of the aquifer. The closest offsite well (Figure 2.3.2-5) in the same aquifer unit from an STP site well is Texas Water Development Board Well 8109702, which is located approximately 1.25 miles (6600 feet) southeast of STP Well 7. However, the CPGCD requires a distance of 2,500 feet to be between wells permitted by the District (Reference 4.2-6). Therefore a distance between the potential wells of 2,500 feet would result in the more conservative model results than 6600 feet. As discussed above, the hydrologic parameters used for the modeling are listed in Table 4.2-3.

ER Section 4.2.2.1

STPNOC proposes that the second, third, and fourth paragraphs of ER Section 4.2.2.1 be revised as follows:

The assumptions made were that the aquifer is homogeneous, isotropic, of uniform thickness, and of infinite aerial extent. The assumptions also include that the potentiometric surface prior to pumping is horizontal; the well is pumped at a constant discharge rate; the well is fully penetrating and flow is horizontal; the well diameter is infinitesimal so that storage within the well can be neglected; and water from storage is discharged instantaneously with decline of head. The results of the confined nonleaky scenario model indicated that drawdown of the deeper portion of the Chicot Aquifer potentiometric surface at a distance of 2500 feet from any STP site well based on an average pumping rate of 798 gpm after a period of 27 years (9855 days), which is the operational period of STP 1 & 2 to beginning of construction, would result in a drawdown of 27 to 30 feet. During the construction period [7 years (2555 days)] for STP 3 & 4, the drawdown associated only with the construction activities and a pumping rate of 1062 gpm is 32 to 36 feet. During the period of overlap of the current operational water use and the amount of water projected to be used during construction of STP 3 & 4 over the length of construction activities, the drawdown of the potentiometric surface of the Chicot Aquifer was determined to be 55 to 63 feet (pumping rate of 1860 gpm, which as detailed in Section 4.2.2 is a conservative normalized approximation of the current permitted ~~value~~limit) at 2,500 feet from the pumping well.

In reality, as with the confined non-leaky scenario, ~~under the confined non-leaky scenario,~~ the actual withdrawal resulting from the pumping of any STP site well a distance of 2,500 feet away would be similar to the drawdown that could be generated

under current operating conditions based on design yields and assuming that the wells pumped are pumped in a manner such that no two adjacent wells are ever pumped at the same time to prevent coalescing drawdowns. The drawdown at a distance 2,500 feet from any STP site well for the 500 gpm design yield during the projected 40-year operating period of STP 1 & 2 is 18 to 20 feet.

STPNOC concludes that impacts due to increased pumping during construction activities to the deeper portion of the Chicot Aquifer would be SMALL to MODERATE and would warrant mitigation. A reduction in drawdown potential could be obtained by the permitting of additional production wells within the same aquifer sequence ~~that would be used to supply groundwater during construction~~. This would allow STP to decrease the actual pumping rate at each well location, thereby spreading out the potential drawdown impacts across the STP site and reducing the effect each of the individual wells would have on offsite well locations while pumping within the current permitted rate ~~of 1860 gpm (3000 acre-feet per year)~~.

ER Section 4.2.4

STPNOC proposes that two references be added to the end of the list of references in ER Section 4.2.4 as follows:

4.2-8 "Plant Water Balance," Fluor Nuclear Power Calculation No. U7-SITE-G-CALC-DESN-2001.

4.2-9 "Site Groundwater Use for Construction, Initial Testing, Startup, and Operations," Fluor Nuclear Power Calculation No. U7-SITE-G-CALC-DESN-2002.

ER Table 4.2-3

STPNOC proposes that the notes following ER Table 4.2-3 be revised as follows:

Case 3 to 4 – STP 3 & 4 construction - pumping well at 1062 gpm, which is 1860 gpm (i.e., as detailed in Section 4.2.2, the conservative normalized approximation of the current permit limit) less the Units 1 and 2 average annual withdrawal rate (798 gpm) ~~remainder of 1860 gpm permitted rate (1062 gpm)~~
Case 5 to 6 – STP 1 & 2 operation and STP 3 & 4 construction - pumping at ~~total permit value of 3000 ac-ft/year (~~1860 gpm~~)~~

ER Section 4.4.2.2.7

STPNOC proposes that the second and third paragraphs of ER Section 4.4.2.2.7 (under the heading "Water Supply Facilities") be revised as follows:

STP does not use water from a municipal system. Therefore, water usage by the labor force, while onsite, would not impact municipal water suppliers. Five active onsite wells

provide makeup water, process water, potable water, and supply for the fire protection system for STP 1 & 2. These wells and the additional well(s) would provide potable water for the construction project as well. The wells extend into the Chicot Aquifer, range in depth from 600 to 700 feet, and have design yields of 200 to 500 gpm. Current permitted total withdrawal rates are approximately 3,000 acre-feet per year (approximately 2.7 million gallons per day). Average daily usage for STP 1 & 2 from 2001 through 2006 was approximately ~~1.1 million gallons per day (763~~798 gpm~~)~~, for all purposes (S~~ub~~section ~~4.2.2~~2.3.2.2). A small but not insignificant portion of this amount has been diverted to the MCR as a result of manual operation of the groundwater well pump and header system. With the installation of appropriate automated groundwater well pump and header system controls, this diverted groundwater would be available for use by Units 3 and 4. However, as documented in the site groundwater use calculation (Reference 4.4-44), it has been determined that even if this water were not available to Units 3 and 4, the existing STP site groundwater operating permit limit provides adequate groundwater supply for water uses required for the operation of STP Units 1 and 2 and the construction, initial testing, and operation of STP Units 3 and 4.

Groundwater would be used during construction and initial testing of STP Units 3 and 4 for personal consumption and use, concrete batch plant operation, concrete curing, cleanup activities, dust suppression, placement of engineered backfill, and piping flushing and hydrostatic tests. ~~During peak construction, an additional 5950 people on site could increase potable consumption by a maximum of 154,700 gpd for personal use. Estimated maximum construction use, including personal use (potable), concrete batch plant operation, concrete curing, cleanup activities, dust suppression, placement of engineered backfill, and piping hydrotests and flushing operations is approximately 1.7 million gallons per day (1200 gpm) (Subsection 4.2.2).~~ Water uses for the construction and initial testing of STP Units 3 and 4 were estimated for each month during the construction period through the commencement of unit operation (Reference 4.4-44). As documented in the site groundwater use calculation (Reference 4.4-44), monthly construction water uses are projected to range from a normalized rate of approximately 10 gpm to approximately 228 gpm. Similarly, monthly water uses associated with initial testing of STP Units 3 and 4 are projected to range from a normalized rate of approximately 47 gpm to approximately 491 gpm.

When evaluating whether the total site groundwater demand can be satisfied by the available groundwater supply, the site groundwater use calculation (Reference 4.4-44) considers the schedule projected for each use, and evaluates the total site groundwater usage at each point in time from the commencement of STP Units 3 and 4 construction until both Units 3 and 4 are in operation (i.e., Units 1, 2, 3 and 4 are operating simultaneously). With consideration for the need to maintain water storage capacity to provide for peak site water demands, this evaluation confirms that total site groundwater demand remains below the existing site groundwater permit limit during construction, initial testing, and operation of STP Units 3 and 4. Therefore, ~~STPNOC conservatively estimates that total daily groundwater usage during peak construction activities, including usage by STP 1 & 2, would be approximately 2.8 million gallons per day, which, at a sustained level, could push total annual groundwater usage above the current permitted~~

limit. Therefore, construction impacts to groundwater use during peak construction activities (if peak groundwater usage were sustained) ewould be MODERATESMALL and would warrant mitigation. To mitigate this shortage of capacity, STPNOC would implement water conservation strategies for STP 3 & 4 construction activities. Conservation strategies for STP 3 & 4 construction activities could include such measures as stand-alone drinking water stations and portable toilets, optimizing the scheduling of water intensive operations, and reusing water from dewatering operations for functions such as dust control.

ER Section 4.4.4

STPNOC proposes that one reference be added to the end of the list of references in ER Section 4.4.4 as follows:

4.4-44 "Site Groundwater Use for Construction, Initial Testing, Startup, and Operations," Fluor Nuclear Power Calculation No. U7-SITE-G-CALC-DESN-2002.

ER Section 5.2.1

STPNOC proposes that the second and third paragraphs of ER Section 5.2.1 be revised (with the second paragraph split into two separate paragraphs) as follows:

The STP 3 & 4 closed-cycle cooling system would require makeup water supplied to the Main Cooling Reservoir (MCR) from the Colorado River to replace that lost to evaporation, drift (entrained in atmospheric water vapor), and blowdown (water released to purge solids). As discussed in Subsection 2.3.2, the MCR is an industrial reservoir and is not considered to be waters of the state (Reference 5.2-1). Seepage losses from the MCR to groundwater are attributed to STP 1 & 2 operation and the addition of STP 3 & 4 would have insignificant impact on the seepage rates (Section 3.3). As discussed in Section 3.3, groundwater used for potable and sanitary use, power plant makeup and other plant uses, and for makeup water for the Ultimate Heat Sink (UHS) (mechanical draft cooling towers) would be pumped from groundwater wells. Conservative water use projections for simultaneous operation of both STP Units 3 and 4 are summarized in Table 3.3-1, and include a total estimated normalized groundwater demand of approximately 975 gpm (approximately 1574 acre-feet/year), and approximately 3434 gpm for maximum short-term steady-state conditions. Table 3.3-1 also indicates that the estimated normalized groundwater demand for UHS makeup is approximately 885 gpm (both units) under normal use conditions, and approximately 3,203 gpm (both units) for maximum short-term steady-state conditions. STP 3 & 4 total groundwater requirements under normal use conditions were estimated to be 1242 gpm (normalized). Under maximum use conditions, the normalized rate of use was estimated to be 4108 gpm. STPNOC is currently evaluating the possibility of permitting and installing additional groundwater wells at the STP site. Once the evaluation has been completed, the NRC would be notified if additional wells are proposed.

As detailed further in Section 2.3.1.2.4.3, STPNOC intends to install at least one additional site groundwater well with a design capacity of 500 gpm. The additional well(s) would be properly permitted under applicable~~Also, STPNOC would submit the necessary well permit applications to the~~ Coastal Plains Groundwater Conservation District (GPGCD) and TCEQ requirements, and would not involve a request for an increase in the existing permit limit~~ as required for approval~~. As discussed in Section 2.3.1.2.4.3, with consideration for the need to maintain groundwater storage capacity to provide for peak site water demands, total site groundwater demand will remain below the existing site groundwater permit limit during construction, initial testing, and operation of STP Units 3 and 4. Notwithstanding, the MCR and Colorado River remain as alternative sources in the unlikely event that unanticipated peak site water demands would require additional water sources.~~The maximum groundwater demands are estimated based on the requirements of one unit during a planned refueling outage and the second unit in a forced outage using worst-case relative humidity. Well water demand for the UHS makeup is an average of 885 (both units) gpm under normal use conditions and an average of 3,203 (both units) gpm under maximum use conditions. If the total demand for groundwater is greater than the well water system capacity, the required additional UHS makeup water would be provided from the MCR (Section 3.3).~~

The expected normalized rate of withdrawal of Colorado River water (Section 3.3) to replace water losses from the MCR due to STP 3 & 4 operations (ignoring natural evaporation since it is already accounted for under Units 1 and 2) is approximately 22,799 gpm (normal operating conditions) and 47,489 gpm (short-term peak conditions). These surface water removal rates are sufficient to provide MCR makeup for the approximately 23,190 gpm (average annual forced evaporation during normal operating conditions at an assumed 100 percent load factor) and 49,000 gpm (maximum short-term forced evaporation) attributable to STP 3 & 4 heat loads~~ during normal operating conditions is estimated to be approximately 23,170 gpm and 23,427 gpm during maximum (peak) use operations~~. As discussed in Subsection 2.3.2, the STP site is currently permitted to withdraw 102,000 acre-feet per year or a normalized rate of 62,234 gpm. This permitted withdrawal rate is sufficient to support operation of all four STP units.

ER Section 5.2.2.1

STPNOC proposes that the first two sentences of the second paragraph and the first four sentences of the third paragraph of ER Section 5.2.2.1 be revised as follows:

Based on the planned cooling system configuration (Figure 3.3-1), surface water removal from the Colorado River for STP 3 & 4 (ignoring natural evaporation since it is already accounted for under Units 1 and 2) is estimated to be at a normalized rate of ~~42,604~~22,799 gpm under normal operating conditions and ~~44,779~~47,489 gpm under maximum operating conditions~~, which could occur for a period of approximately 48 hours~~ (see Table 3.3-1). ~~Of t~~These surface water removal rates~~,~~ are sufficient to provide MCR makeup for the approximately ~~23,170~~23,190 gpm (average annual forced evaporation during normal operating conditions at an assumed 100 percent load factor)

and ~~23,427~~49,000 gpm (maximum short-term ~~use operations~~forced evaporation) ~~are~~ attributable to STP 3 & 4 heat loads....

~~Less than 12%~~Approximately 12.7 percent or less (Table 5.2-1) of the estimated monthly mean Colorado River flow near Bay City would be lost to makeup. Makeup withdrawal for maximum use operations from the Colorado River projected for STP 3 & 4 represents ~~3.8%~~4.0 percent of the historical annual mean flow (1,180,344 gpm [2630 cfs]) of the river near Bay City. However, the annual mean flow during 2006 was 303,834 gpm (677 cfs) (Reference 5.2-5). The projected normal use withdrawal of ~~42,604~~22,799 gpm for STP 3 & 4 during a 303,834 gpm (677 cfs) flow event would represent ~~14%~~7.5 percent of flow.

ER Section 5.2.2.2

STPNOC proposes that the first four paragraphs and the seventh paragraph of ER Section 5.2.2.2 be revised as follows:

As discussed in Subsection 2.3.2, groundwater wells would be used to supply makeup water to STP 3 & 4 for the UHS, service water for the power plant makeup and use, and water for the potable and sanitary systems. Based on the results of an operating plant (Units 3 and 4) water balance calculation (Reference 5.2-13) and a site groundwater use calculation (Reference 5.2-14), STPNOC has determined that the STP site groundwater operating permit limit provides adequate groundwater supply for water uses required for the operation of STP Units 1 and 2 and the construction, initial testing, and operation of STP Units 3 and 4. The permit allows groundwater withdrawals from the five site production wells up to a limit of 9000 acre-feet over the permit term of approximately 3 years. For discussion purposes, this permit limit may be described herein as "approximately 3000 acre-feet/year," recognizing that groundwater withdrawal in a single year may exceed 3000 acre-feet provided that total withdrawals over the permit term do not exceed 9000 acre-feet. As a point of reference, if the permit limit were exactly 3000 acre-feet/year (which is not necessarily the case due to slight variances in the permit term with each permit renewal), the equivalent "normalized" withdrawal rate assuming continuous pumping every minute of every day of each year would be approximately 1860 gpm.

~~From 2001 to 2006, STP 1 & 2 groundwater production averaged 798 gpm from five production wells located in the deep confined aquifer (Table 2.3.2-16). The highest production (863 gpm) was in 2001. The lowest production was 745 gpm, in 2002. The existing five production wells at STP (Subsection 2.3.2) are permitted to withdraw a combined total of 3000 acre-feet per year (1860 gpm).~~Historical groundwater withdrawal rates associated with operation of Units 1 and 2 are provided in Table 2.3.2-18. This data shows that from 2001 through 2006, annual groundwater use for operation of STP Units 1 and 2 averaged approximately 798 gpm (approximately 1288 acre-feet/year). A small but not insignificant portion of this amount has been diverted to the MCR as a result of manual operation of the groundwater well pump and header system. With the installation of appropriate automated groundwater well pump and header system controls,

this diverted groundwater would be available for use by Units 3 and 4. However, as documented in the site groundwater use calculation (Reference 5.2-14), it has been determined that even if this water were not available to Units 3 and 4, the existing STP site groundwater operating permit limit provides adequate groundwater supply for water uses required for the operation of STP Units 1 and 2 and the construction, initial testing, and operation of STP Units 3 and 4.

~~As discussed in Section 3.3, the groundwater needs for STP 3 & 4 would be 1242 gpm during normal operations and 4108 gpm during maximum operations. The primary groundwater production for STP 1 & 2 is through the use of production Wells 5, 6, and 7. As discussed in Subsection 2.3.2, the average use for 2001 through 2006 of groundwater for STP 1 & 2 is 798 gpm. This would allow the use of approximately 1062 gpm for normal operations of STP 3 & 4 which would require an average production rate of approximately 1242 gpm. During normal operations of STP 3 & 4, STPNOC would use groundwater in excess of that used by STP 1 & 2 up to the current permitted limit of 3000 acre-feet/year (an average of 1860 gpm). STPNOC would use the MCR to supply additional water above this value as required for continued operations. STPNOC is currently evaluating the possibility of permitting and installing additional groundwater wells at the STP site. Once the evaluation has been completed, the NRC would be notified if additional wells are proposed. Should additional wells be proposed, STPNOC would submit the necessary well permit applications to the Coastal Plains Groundwater Conservation District (CPGCD) and TCEQ as required for approval.~~Water uses projected for the operation of STP Units 3 and 4 are derived from system design data as well as from operational water use data for specific systems for which such data is available (Reference 5.2-13). As detailed in Table 3.3-1, conservative water use projections for simultaneous operation of both STP Units 3 and 4 include a total estimated normalized groundwater demand of approximately 975 gpm (approximately 1574 acre-feet/year), and approximately 3434 gpm for maximum short-term steady-state conditions.

When evaluating whether the total site groundwater demand can be satisfied by the available groundwater supply, the site groundwater use calculation (Reference 2.4S.12-24) considers the schedule projected for each use, and evaluates the total site groundwater usage at each point in time from the commencement of STP Units 3 and 4 construction until both Units 3 and 4 are in operation (i.e., Units 1, 2, 3 and 4 are operating simultaneously). With consideration for the need to maintain water storage capacity to provide for peak site water demands, this evaluation confirms that total site groundwater demand remains below the existing site groundwater permit limit during construction, initial testing, and operation of STP Units 3 and 4. Notwithstanding, the MCR and Colorado River remain as alternative sources in the unlikely event that unanticipated peak site water demands would require additional water sources.

~~To meet the proposed maximum or peak groundwater demand (normalized value of 4108 gpm) for STP 3 & 4, STPNOC would supply the water needed for STP 3 & 4 UHS makeup in excess of the normal operations groundwater value (normalized value of 1242 gpm) by using water stored in the MCR to supply the additional water.~~ As detailed further in Section 2.3.1.2.4.3, STPNOC intends to install at least one additional site

groundwater well with a design capacity of 500 gpm. As documented in the site groundwater use calculation (Reference 5.2-14), this additional capacity will allow for sufficient groundwater withdrawal to meet water uses required for: (1) operation of STP Units 1 and 2 and the construction, initial testing, and operation of STP Units 3 and 4; and (2) potential temporary capacity reduction as a result of equipment failure/unavailability. As with the existing five site production wells, the new well(s) would be installed to depths within the deep portion of the Chicot Aquifer. As discussed in Subsection 2.3.1, ~~any~~the proposed new well(s) would be required to be at least 4000 feet from STP 1 & 2 and STP 3 & 4 to prevent potential subsidence of the facilities. Any additional wells would be properly permitted under applicable CPGCD and TECQ requirements, and would not involve a request for an increase in the existing permit limit.~~Depending on the period of maximum operations of up to 30 days, and depending on the level of the MCR, an additional withdrawal rate of 2873 gpm would be required. This additional demand could create a short-term need for increased surface water withdrawal from the Colorado River.~~

To determine potential offsite impact during the operation of STP 3 & 4, ~~cumulative projected water usage was used to calculate~~ drawdown at the site boundary was calculated. The drawdown calculation assumes a continuous pumping rate of 1860 gpm, which as discussed above is a normalized approximation of the current permit limit, and is conservative for purposes of the drawdown calculation. The drawdown calculation also assumes that~~as though~~ all water ~~was~~is pumped from a single onsite well. ~~As discussed in Section 3.3, the normal use of groundwater for STP 3 & 4 may require the permitting and installation of additional groundwater wells. If additional wells are proposed, STPNOC would apply to the CPGCD for the necessary groundwater permit(s).~~ The minimum distance allowed by the CPGCD between permitted wells is 2500 feet (Reference 5.2-7). Therefore, the 2500-foot distance ~~will be~~was used for the most conservative model distance from an STP site well to any potential offsite well. As with Section 4.2, a confined nonleaky aquifer scenario was used to determine the drawdown at the offsite groundwater well location closest to the STP 3 & 4 well location. Data used to input to an analytical distance-drawdown model is described in Subsection 2.3.1 and are referenced in Table 5.2-2.

...

An assumption was made that all of the water to be pumped was from a fully penetrating single well (any site well). The results of the confined nonleaky scenario model indicated that drawdown from normal operation of STP 3 & 4 of the deeper portion of the Chicot Aquifer potentiometric surface 2500 feet from a single STP site well was 38 to 42 feet based on an average pumping rate of 1062 gpm over a period of 40 years. The pumping rate of 1062 gpm is 1860 gpm (conservative normalized approximation of the permit limit) less the Units 1 and 2 average annual withdrawal rate (798 gpm)~~the remainder of the current STP site permit after the average of 798 gpm STP 1 & 2 groundwater use rate is subtracted (1860 gpm - 798 gpm)~~. Drawdown values for the deep portion of the Chicot Aquifer for the above pumping case~~, pumping at the maximum permit limit of 3000 acre-feet/year (an average of 1860 gpm) and pumping at a well design yield of 500 gpm,~~ are included in Table 5.2-2.

ER Section 5.2.3.2

STPNOC proposes that two references be added to the end of the list of references in ER Section 5.2.3.2 as follows:

5.2-13 "Plant Water Balance," Fluor Nuclear Power Calculation No. U7-SITE-G-CALC-DESN-2001.

5.2-14 "Site Groundwater Use for Construction, Initial Testing, Startup, and Operations," Fluor Nuclear Power Calculation No. U7-SITE-G-CALC-DESN-2002.

ER Table 5.2-1

STPNOC proposes that Table 5.2-1 be revised as follows:

Table 5.2-1 Comparison of Colorado River Flows and STP 3 & 4 Cooling Water Flows

	Mean Monthly River Flow [1], [2]	Maximum [3] River Withdrawal for Makeup (2 units)	Percent of Mean Monthly River Flow Lost to Maximum Makeup (2 units)	Maximum Total Evaporation Rate (2 units) [1]	Percent of Average Flow Lost to Evaporation
January	1,150,274	~~44,779~~47,489	~~3.9~~4.1	~~48,556~~49,000	~~4.2~~4.3
February	1,455,907	~~44,779~~47,489	~~3.1~~3.3	~~48,556~~49,000	~~3.3~~3.4
March	1,281,324	~~44,779~~47,489	~~3.5~~3.7	~~48,556~~49,000	3.8
April	1,225,224	~~44,779~~47,489	~~3.7~~3.9	~~48,556~~49,000	4.0
May	1,642,608	~~44,779~~47,489	~~2.7~~2.9	~~48,556~~49,000	3.0
June	1,919,518	~~44,779~~47,489	~~2.3~~2.5	~~48,556~~49,000	~~2.5~~2.6
July	844,642	~~44,779~~47,489	~~5.3~~5.6	~~48,556~~49,000	~~5.7~~5.8
August	374,748	~~44,779~~47,489	~~11.9~~12.7	~~48,556~~49,000	~~13.0~~13.1
September	787,195	~~44,779~~47,489	~~5.7~~6.0	~~48,556~~49,000	6.2
October	1,103,150	~~44,779~~47,489	~~4.1~~4.3	~~48,556~~49,000	4.4
November	1,248,562	~~44,779~~47,489	~~3.6~~3.8	~~48,556~~49,000	3.9
December	1,100,906	~~44,779~~47,489	~~4.1~~4.3	~~48,556~~49,000	~~4.4~~4.5

ER Section 5.3.1.1

STPNOC proposes that the second paragraph in ER Section 5.3.1.1 be revised as indicated in the following markup. The changes shown in this markup are described in the STPNOC response to NRC RAI No. 05.02-08, and are intended to conform with similar changes proposed in the STPNOC response to NRC RAI 02.03-06.

> The makeup pumps at the RMPF operate intermittently, as dictated by weather (patterns of rainfall, both locally and regionally; ambient temperatures), Colorado River flows, and

operational considerations. The MCR is expected to lose up to ~~46,536~~23,190 gpm (average annual value conservatively based on an assumed 100 percent load factor) to forced evaporation (~~including~~ natural evaporation from MCR is already accounted for under Units 1 and 2 and thus is not included for Units 3 and 4) with STP 3 & 4 operating (see Section 3.3). STPNOC projects that the normalized rate of withdrawal of Colorado River water to replace water losses from the MCR would be ~~42,604~~22,799 gpm for normal STP 3 & 4 operations and ~~44,779~~47,489 gpm during maximum (peak) use operations (see Section 3.3, Table 3.3-1). The discrepancy between projected river makeup ~~(44,779 gpm)~~ and estimated evaporative losses ~~(46,536 gpm)~~ stems from the fact that there is some groundwater flow into the reservoir through plant processes.

ER Section 5.3.3.1.3

STPNOC proposes that the third sentence of the first paragraph in ER Section 5.3.3.1.3 be revised as follows:

> This would be supplemented by the MCR ~~during periods where groundwater use was restricted by permit limitations~~in the unlikely event that unanticipated peak site water demands would require additional water sources.

ER Section 5.8.2.2.7

STPNOC proposes that the second and fourth paragraphs in ER Section 5.8.2.2.7 be revised as follows:

> STPNOC does not use water from a municipal system. Therefore, water usage by the workforce, while onsite, would not impact municipal water suppliers. Five active onsite wells provide makeup water, process water, potable water, and supply for the fire protection system for STP 1 & 2. In conjunction with surface water from the Colorado River, these wells and at least one additional well would provide the water for operation of STP 1 & 2 and STP 3 & 4~~ as well~~. The wells extend into the Chicot Aquifer, range in depth from 600 to 700 feet, and have design yields of 200 to 500 gpm. With the clarification provided in Section 5.2.2.2, ~~C~~current permitted total withdrawal rates are approximately 3,000 acre-feet per year (approximately 2.7 million gpd). Average daily usage for STP 1 & 2 from 2001 through 2006 was approximately 1.1 million gpd (~~763~~798 gpm), for all purposes (Subsection 4.2.2). In 2005, STPNOC withdrew 422,333,662 gallons (804 gpm, or 1,296 acre-feet) of water from five active onsite groundwater wells for all uses (Subsection 2.5.2.7.1.1).
>
> ...
>
> ~~Groundwater would be withdrawn from wells for cooling system makeup at the rate of 1077 gpm for normal operations and up to the permitted withdrawal amount for maximum operations. Additional water needs during maximum operations would be met by withdrawal from the MCR.~~As detailed in Table 3.3-1, conservative water use projections for simultaneous operation of both STP Units 3 and 4 include a total estimated normalized groundwater demand of approximately 975 gpm (approximately

1574 acre-feet/year), and approximately 3434 gpm for maximum short-term steady-state conditions. With consideration for the need to maintain water storage capacity to provide for maximum short-term steady-state conditions, site groundwater use evaluations confirm that total site groundwater demand remains below the existing site groundwater permit limit during construction, initial testing, and operation of STP Units 3 and 4. Notwithstanding, the MCR and Colorado River remain as alternative sources in the unlikely event that unanticipated peak site water demands would require additional water sources.

ER Table 5.10-1

STPNOC proposes that table entries for 5.2.1 and 5.2.2 in ER Table 5.10-1 be revised as follows:

Table 5.10-1 Summary of Potentially Adverse Impacts of Operation

5.2.1 Hydrologic Alterations and Plant Water Supply	Potential hydrologic impacts from the withdrawal from the Chicot Aquifer. Makeup water for the ultimate heat sink (mechanical draft cooling towers) would be pumped from five existing and ~~proposed~~at least one additional groundwater wells. [2]	S	~~STPNOC will apply to Coastal Plains Groundwater Conservation District for an increase in the site's current groundwater permit from 3000 acre-feet per year to 3500 acre-feet per year up to the current permitted limit with the remainder of the water requirements met by water from the Main Cooling Reservoir (MCR).~~Total site groundwater demand remains below the site groundwater permit limit. The MCR and Colorado River are alternative water sources if required. Additional well(s) would be permitted under applicable CPGCD and TECQ requirements, and would not involve a request for an increase in the permit limit. Withdrawal groundwater from the deep confined Chicot aquifer, limiting impacts to those local wells in the deep aquifer. Conduct groundwater monitoring as required by groundwater use permit.
5.2.2 Water-Use Impacts	Potential hydrologic impacts to the Colorado River from pumping of water to the MCR. Water would be withdrawn from the Colorado River and added to the MCR to replace water lost to evaporation, seepage, blowdown from the MCR, and as needed as the result of maximum operating conditions at the rate of ~~42,604~~22,799 gpm during normal operations and ~~44,779~~47,489 gpm during maximum operations, as contained in the current permit. [2]	S	No mitigation would be required.

ER Section 10.1.1.2

STPNOC proposes that ER Section 10.1.1.2 be revised as follows:

> The construction of STP 3 & 4 will increase the amount of groundwater used at STP. ~~The currently permitted groundwater withdrawal limit may need to be exceeded if onsite conservation methods are not successful.~~However, as documented in the site groundwater use calculation (Reference 10.1-1), it has been determined that the existing STP site groundwater operating permit limit provides adequate groundwater supply for water uses required for the operation of STP Units 1 and 2 and the construction, initial testing, and operation of STP Units 3 and 4. Temporary dewatering of the shallow aquifer will also be required during construction. However, construction practices (i.e., best management practices) and adherence to storm water management procedures, as included in the Storm Water Pollution Prevention Plan, will minimize the adverse effects of the construction dewatering on the aquifer and local wells. Additional potential construction impacts to local hydrology include the potential disturbance of local surface water bodies due to turbidity and sedimentation caused by construction activities. In summary, small, temporary unavoidable adverse impacts to local hydrology and water are anticipated during construction.

ER Section 10.1.2.2

STPNOC proposes that the first paragraph of ER Section 10.1.2.2 be revised as follows:

> Operation of STP 3 & 4 will increase the amount of surface water and groundwater used at STP. ~~The required groundwater use could exceed the level allowed by the current groundwater permit.~~However, as documented in the site groundwater use calculation (Reference 10.1-1), it has been determined that the existing STP site groundwater operating permit limit provides adequate groundwater supply for water uses required for the operation of STP Units 1 and 2 and the construction, initial testing, and operation of STP Units 3 and 4. STPNOC ~~is currently evaluating the possibility of permitting and installing additional groundwater wells at the STP site~~intends to install at least one additional site groundwater well with a design capacity of 500 gpm. As documented in the site groundwater use calculation (Reference 10.1-1), this additional capacity will allow for sufficient groundwater withdrawal to meet water uses required for: (1) operation of STP Units 1 and 2 and the construction, initial testing, and operation of STP Units 3 and 4; and (2) potential temporary capacity reduction as a result of equipment failure/unavailability. ~~Once the evaluation has been completed, the NRC would be notified if additional wells are proposed. Also, STPNOC would submit the necessary well permit applications to the~~The additional well(s) would be properly permitted under applicable Coastal Plains Groundwater Conservation District (CPGCD) and TCEQ ~~as required for approval~~ requirements, and would not involve a request for an increase in the existing permit limit. Consumptive water loss from the Colorado River will be within currently permitted levels. Small to moderate unavoidable adverse impacts from STP 3 & 4 water use, specifically the loss of availability of both resources to other potential users will occur during the life of the plant.

ER Section 10.1.4 (new)

STPNOC proposes to add new ER Section 10.1.4, "References," to allow the addition of a reference for ER Section 10.1 as follows:

10.1.4 References

10.1-1 "Site Groundwater Use for Construction, Initial Testing, Startup, and Operations," Fluor Nuclear Power Calculation No. U7-SITE-G-CALC-DESN-2002.

ER Table 10.1-2

STPNOC proposes that table entries for "Hydrological and Water Use" in ER Table 10.1-2 be revised as follows:

Table 10.1-2 Operation-Related Unavoidable Adverse Environmental Impacts (continued)

Category	Adverse Impact	Actions to Mitigate Impacts	Unavoidable Adverse Impacts
Hydrological and Water Use	Potential hydrologic impacts to the Colorado River from pumping of water to the MCR. Water would be withdrawn from the Colorado River and added to the ~~main cooling reservoir~~MCR to replace water lost to evaporation, seepage, blowdown from the ~~main cooling reservoir~~MCR, and as needed.	~~Maximum operating conditions are~~River water pumped to the MCR (attributable specifically to Units 3 and 4) would be at a normalized rate of approximately ~~42,604~~22,799 gpm during normal operations and ~~44,779~~47,489 gpm during maximum operations. Impact is considered small and would not require mitigation.	Small unavoidable impact to water availability downstream of the plant.
	Makeup water for the ultimate heat sink (mechanical draft cooling towers) would be pumped from [five] existing groundwater wells and ~~potentially~~at least one new groundwater wells. Impacts to local groundwater supply due to increased demand from operating STP 3 & 4.	STPNOC intends to install at least one~~is currently evaluating the possibility of permitting and installing~~ additional groundwater wells ~~at the STP site~~. ~~Once the evaluation has been completed, the NRC would be notified if additional wells are proposed. Also, STPNOC would submit the necessary well permit applications to the~~ The additional well(s) would be properly permitted under applicable Coastal Plains Groundwater Conservation District (CPGCD) and TCEQ ~~as required for approval~~requirements; and would not involve a request for an increase in the existing permit limit. Withdrawal groundwater from the deep confined Chicot aquifer, limiting impacts to those local wells in the deep aquifer. Conduct groundwater monitoring as required by groundwater use permit.	Small to moderate unavoidable impacts to groundwater availability during the life of the plant.

ER Table 10.4-2

STPNOC proposes that table entries for "Hydrology – Groundwater use" and Hydrology – Surface water use" in ER Table 10.4-2 be revised as follows:

Table 10.4-2 Benefit-Cost Summary (Continued)

Hydrology - Groundwater use	During operations, the expected average rate of groundwater removal for STP 3 & 4 would be ~~1077~~975 gpm for normal operations and ~~3935~~3434 gpm for maximum (peak) operations. During the construction period, dewatering of shallow, water-table aquifer would have only small, local ~~affecte~~effect.
Hydrology - Surface water use	The expected rate of withdrawal of Colorado River water to replace water losses from the MCR (attributable to STP Units 3 & 4) will be ~~42,604~~22,799 ~~gallons per minute (~~gpm~~)~~ for normal two-unit operations and ~~44,779~~47,489 gpm during maximum (peak) use operations

ER Table 10.4-4

STPNOC proposes that the groundwater use "adverse impact" entries for construction-related "Hydrology and Water Use" in ER Table 10.4-4 (Page 10.4-19) be revised as follows:

Table 10.4-4 Unavoidable Adverse Environmental Impacts of Proposed Project at Alternative Sites (Continued)

Hydrology and Water Use	Adverse Impact – Based on STP 3 & 4, construction would require up to ~~1200~~approximately 600 gpm (normalized) of groundwater. Mitigation Measure - Practice water conservation as practical. No other measures or controls would be necessary. Unavoidable Adverse Environmental Impacts -. Small unavoidable adverse impacts.	Adverse Impact – Based on STP 3 & 4, construction would require up to ~~1200~~approximately 600 gpm (normalized) of groundwater. Mitigation Measure - Practice water conservation as practical. No other measures or controls would be necessary. Unavoidable Adverse Environmental Impacts -. Small unavoidable adverse impacts.	Adverse Impact – Based on STP 3 & 4, construction would require up to ~~1200~~approximately 600 gpm (normalized) of groundwater. Mitigation Measure - Practice water conservation as practical. No other measures or controls would be necessary. Unavoidable Adverse Environmental Impacts -. Small unavoidable adverse impacts.

ER Section 10.5S.1.2

STPNOC proposes that the first paragraph of ER Section 10.5S.1.2 be revised as follows:

> Changes in the local hydrology at the STP site will occur as a result of the construction of STP 3 & 4. Local surface water flow patterns will be altered; however, these alterations will be local to the construction area and will not have a cumulative effect on a regional scale. Groundwater usage will also increase during construction. ~~As discussed in Subsection 4.2.2, the withdrawal rate permitted by the Coastal Plains Groundwater Conservation District (CPGCD) is 1860 gpm. After deducting the amount of groundwater consumed by the operation of STP 1 & 2, approximately 1060 gpm would be available for use in the construction of STP 3 & 4. STPNOC determined that, under normal construction conditions, 1060 gpm will be sufficient to meet the construction needs of STP 3 & 4. The maximum withdrawal rate required for STP 1 & 2 and construction of STP 3 & 4 will be maintained below the withdrawal rate permitted by the CPGCD through water conservation or other mitigative measures.~~ With the clarification provided in Section 2.3.1.2.4.3, the STP site groundwater operating permit limit is approximately 3000 acre-feet/year. Evaluation of site groundwater use confirms that the STP site groundwater operating permit limit provides adequate groundwater supply for water uses required for the operation of STP Units 1 and 2 and the construction, initial testing, and operation of STP Units 3 and 4. There are no other large groundwater users in the vicinity of STP. There are two local industrial facilities that use groundwater (OXEA and Equistar); however, these facilities are approximately 5 miles from the site, too far away for there to be cumulative impacts on the aquifer. The net drawdown in the aquifer will be relatively local and not have any regional effects. Therefore, cumulative impacts to groundwater during construction will be SMALL and mitigation would not be warranted.

ER Section 10.5S.2.2

STPNOC proposes that the first and last paragraphs of ER Section 10.5S.2.2 be revised as follows:

> After operations begin, STP 3 & 4 will use groundwater for several operational systems. ~~The groundwater use requirements for the operation of STP 3 & 4 and STP 1 & 2 could be more than the withdrawal rate permitted by the CPGCD. STPNOC is currently evaluating the possibility of permitting and installing additional groundwater wells at the STP site. Once the evaluation has been completed, the NRC would be notified if additional wells are proposed. Also, STPNOC would submit the necessary well permit applications to the~~ STPNOC has determined that the existing STP site groundwater operating permit limit provides adequate groundwater supply for water uses required for the operation of STP Units 1 and 2 and the construction, initial testing, and operation of STP Units 3 and 4. STPNOC intends to install at least one additional site groundwater well with a design capacity of 500 gpm. The additional well(s) would be properly permitted under applicable CPGCD and TCEQ requirements, and would not involve a request for an increase in the existing permit limit~~as required for approval~~. No other

significant current or planned users of groundwater in the vicinity of the STP site have been identified. Therefore, cumulative impacts to groundwater during operation will be SMALL, not warrant mitigation, and not have a regional effect.

...

STP 1 & 2 have a maximum actual consumptive groundwater use of approximately 1300 acre-ft/year (~~800~~798 gallons per minute[gpm]) (Tables 2.3.2-18 and 2.9~~S~~-1) and STP 3 & 4 have average and maximum estimated consumptive use of ~~1738~~1574 acre-feet/year (~~1077~~975 gpm) and ~~6351 acre-feet/year (39353~~434 gpm~~)~~, respectively. ~~As stated above, STPNOC is currently evaluating the possibility of permitting and installing additional groundwater wells at the STP site.~~ The effects on the bedrock aquifer will be SMALL, not warrant mitigation, and local to the plant and will not have a cumulative effect on a regional basis.