GE Hitachi Nuclear Energy

26A6642AY
Revision 6
August 2009

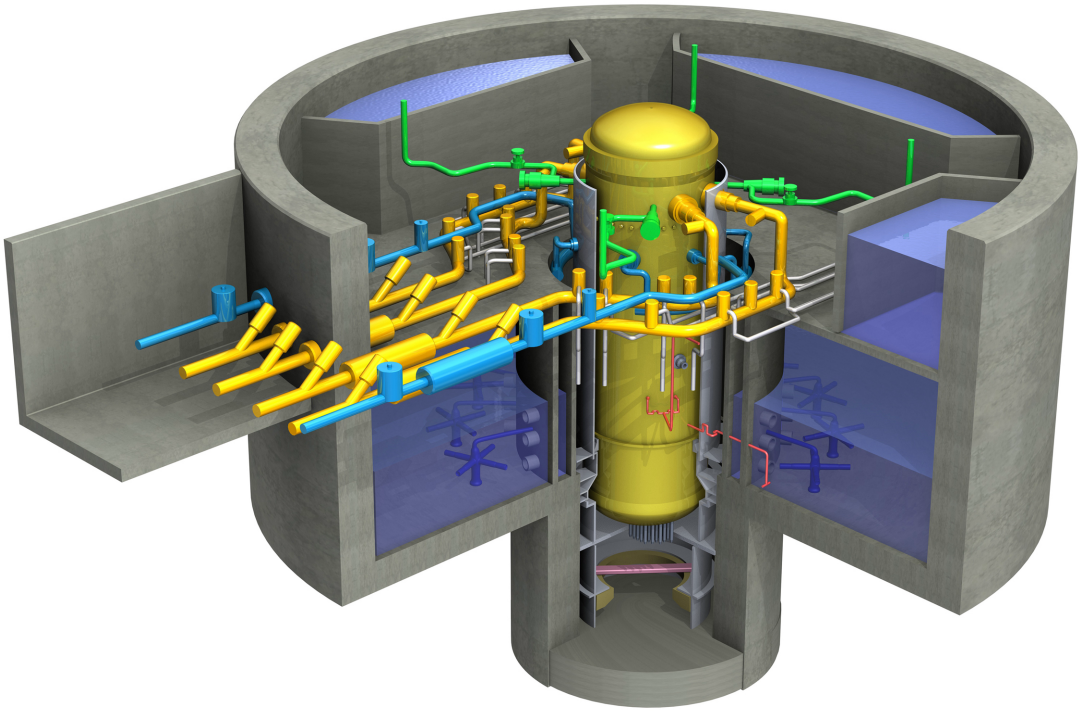

ESBWR Design Control Document
Tier 2

Chapter 9
Auxiliary Systems

Contents

9.1 Fuel Storage and Handling 9.1-1
9.1.1 New Fuel Storage 9.1-1
9.1.1.1 Design Bases 9.1-1
9.1.1.2 Storage Design 9.1-2
9.1.1.3 Mechanical and Structural Design 9.1-2
9.1.1.4 Material Considerations 9.1-2
9.1.1.5 Dynamic and Impact Analysis 9.1-2
9.1.1.6 Facilities Description (New Fuel Storage) 9.1-3
9.1.1.7 Safety Evaluation 9.1-3
9.1.2 Spent Fuel Storage 9.1-4
9.1.2.1 Design Bases 9.1-4
9.1.2.2 Nuclear Design 9.1-5
9.1.2.3 Storage Design 9.1-5
9.1.2.4 Mechanical and Structural Design 9.1-5
9.1.2.5 Thermal-Hydraulic Design 9.1-6
9.1.2.6 Material Considerations 9.1-7
9.1.2.7 Facilities Description (Spent Fuel Storage) 9.1-7
9.1.2.8 Safety Evaluation 9.1-8
9.1.3 Fuel and Auxiliary Pools Cooling System 9.1-9
9.1.3.1 Design Bases 9.1-9
9.1.3.2 System Description 9.1-9
9.1.3.3 Safety Evaluation 9.1-16
9.1.3.4 Testing and Inspection Requirements 9.1-17
9.1.3.5 Instrumentation and Control 9.1-17
9.1.4 Light Load Handling System (Related to Refueling) 9.1-19
9.1.4.1 Design Bases 9.1-19
9.1.4.2 System Description 9.1-20
9.1.4.3 Spent Fuel Cask 9.1-20
9.1.4.4 Overhead Bridge Cranes 9.1-20
9.1.4.5 Refueling Equipment 9.1-21
9.1.4.6 Fuel Servicing Equipment 9.1-22
9.1.4.7 Servicing Aids 9.1-23
9.1.4.8 Reactor Vessel Servicing Equipment 9.1-24
9.1.4.9 In-Vessel Servicing Equipment 9.1-26
9.1.4.10 Storage Equipment 9.1-26
9.1.4.11 Under-Vessel Servicing Equipment 9.1-26
9.1.4.12 Fuel Transfer System 9.1-27
9.1.4.13 Refueling Operations 9.1-28
9.1.4.14 Arrival of Fuel at Reactor Site 9.1-29
9.1.4.15 Reactor Preparation for Refueling 9.1-29
9.1.4.16 Refueling 9.1-30
9.1.4.17 Vessel Closure 9.1-30
9.1.4.18 Safety Evaluation of Fuel Handling System 9.1-31
9.1.4.19 Inspection and Testing Requirements 9.1-32
9.1.4.20 Instrumentation Requirements 9.1-32
9.1.5 Overhead Heavy Load Handling (OHLH) Systems 9.1-33
9.1.5.1 Design Bases 9.1-33
9.1.5.2 General 9.1-33
9.1.5.3 Applicable Design Criteria for All OHLH Equipment 9.1-34

Contents

9.1.5.4 System Description 9.1-34
9.1.5.5 Fuel Building and Reactor Building Cranes 9.1-34
9.1.5.6 Other Overhead Load Handling System 9.1-35
9.1.5.7 Equipment Operating Procedures Maintenance and Service 9.1-37
9.1.5.8 Operational Responsibilities 9.1-37
9.1.5.9 Safety Evaluations 9.1-38
9.1.5.10 Inspection and Testing 9.1-38
9.1.5.11 Instrumentation Requirements 9.1-38
9.1.6 COL Information 9.1-38
9.1.7 References 9.1-39
9.2 Water Systems 9.2-1
9.2.1 Plant Service Water System 9.2-1
9.2.1.1 Design Bases 9.2-1
9.2.1.2 System Description 9.2-2
9.2.1.3 Safety Evaluation 9.2-4
9.2.1.4 Testing and Inspection Requirements 9.2-4
9.2.1.5 Instrumentation Requirements 9.2-4
9.2.1.6 COL Information 9.2-5
9.2.1.7 References 9.2-5
9.2.2 Reactor Component Cooling Water System 9.2-5
9.2.2.1 Design Bases 9.2-5
9.2.2.2 System Description 9.2-6
9.2.2.3 Safety Evaluation 9.2-8
9.2.2.4 Testing and Inspection Requirements 9.2-8
9.2.2.5 Instrumentation Requirements 9.2-8
9.2.2.6 COL Information 9.2-9
9.2.2.7 References 9.2-9
9.2.3 Makeup Water System 9.2-9
9.2.3.1 Design Bases 9.2-9
9.2.3.2 System Description 9.2-9
9.2.3.3 Safety Evaluation 9.2-11
9.2.3.4 Testing and Inspection Requirements 9.2-11
9.2.3.5 Instrumentation Requirements 9.2-11
9.2.3.6 COL Information 9.2-11
9.2.3.7 References 9.2-11
9.2.4 Potable and Sanitary Water Systems 9.2-11
9.2.5 Ultimate Heat Sink 9.2-12
9.2.5.1 COL Information 9.2-13
9.2.5.2 References 9.2-13
9.2.6 Condensate Storage and Transfer System 9.2-14
9.2.6.1 Design Bases 9.2-14
9.2.6.2 System Description 9.2-14
9.2.6.3 Safety Evaluation 9.2-15
9.2.6.4 Testing and Inspection Requirements 9.2-15
9.2.6.5 Instrumentation Requirements 9.2-16
9.2.6.6 COL Information 9.2-16
9.2.6.7 References 9.2-16
9.2.7 Chilled Water System 9.2-16
9.2.7.1 Design Bases 9.2-16

Contents

9.2.7.2 System Description 9.2-18
9.2.7.3 Safety Evaluation 9.2-20
9.2.7.4 Testing and Inspection Requirements 9.2-20
9.2.7.5 Instrumentation Requirements 9.2-20
9.2.7.6 COL Information 9.2-21
9.2.7.7 References 9.2-21
9.2.8 Turbine Component Cooling Water System 9.2-21
9.2.8.1 Design Bases 9.2-21
9.2.8.2 System Description 9.2-22
9.2.8.3 Safety Evaluation 9.2-23
9.2.8.4 Tests and Inspections 9.2-23
9.2.8.5 Instrumentation Requirements 9.2-23
9.2.8.6 COL Information 9.2-23
9.2.8.7 References 9.2-23
9.2.9 Hot Water System 9.2-23
9.2.10 Station Water System 9.2-24
9.2.10.1 Design Basis 9.2-24
9.2.10.2 System Description 9.2-24
9.2.10.3 Safety Evaluation 9.2-25
9.2.10.4 Testing and Inspection Requirements 9.2-25
9.2.10.5 Instrumentation Requirements 9.2-25
9.2.10.6 COL Information 9.2-25
9.2.10.7 References 9.2-25
9.3 Process Auxiliaries 9.3-1
9.3.1 Compressed Air Systems 9.3-1
9.3.2 Process Sampling System 9.3-1
9.3.2.1 Design Bases 9.3-1
9.3.2.2 System Description 9.3-2
9.3.2.3 Safety Evaluation 9.3-5
9.3.2.4 Tests and Inspections 9.3-5
9.3.2.5 Instrumentation Requirements 9.3-5
9.3.2.6 COL Information 9.3-6
9.3.2.7 References 9.3-6
9.3.3 Equipment and Floor Drain System 9.3-6
9.3.3.1 Design Bases 9.3-7
9.3.3.2 System Description 9.3-7
9.3.3.3 Safety Evaluation 9.3-9
9.3.3.4 Testing and Inspection Requirements 9.3-9
9.3.3.5 Instrumentation Requirements 9.3-10
9.3.3.6 COL Information 9.3-10
9.3.3.7 References 9.3-10
9.3.4 Chemical and Volume Control System 9.3-10
9.3.5 Standby Liquid Control System 9.3-10
9.3.5.1 Design Bases 9.3-10
9.3.5.2 System Description 9.3-11
9.3.5.3 Safety Evaluation 9.3-13
9.3.5.4 Testing and Inspection Requirements 9.3-16
9.3.5.5 Instrumentation Requirements 9.3-16
9.3.5.6 COL Information 9.3-17

Contents

9.3.5.7 References 9.3-17
9.3.6 Instrument Air System 9.3-17
9.3.6.1 Design Bases 9.3-17
9.3.6.2 System Description 9.3-18
9.3.6.3 Safety Evaluation 9.3-18
9.3.6.4 Inspection and Testing Requirements 9.3-18
9.3.6.5 Instrumentation Application 9.3-19
9.3.6.6 COL Information 9.3-19
9.3.6.7 References 9.3-19
9.3.7 Service Air System 9.3-19
9.3.7.1 Design Bases 9.3-19
9.3.7.2 System Description 9.3-20
9.3.7.3 Safety Evaluation 9.3-21
9.3.7.4 Inspection and Testing Requirements 9.3-21
9.3.7.5 Instrumentation Application 9.3-21
9.3.7.6 COL Information 9.3-21
9.3.7.7 References 9.3-21
9.3.8 High Pressure Nitrogen Supply System 9.3-22
9.3.8.1 Design Bases 9.3-22
9.3.8.2 System Description 9.3-22
9.3.8.3 Safety Evaluation 9.3-24
9.3.8.4 Inspection and Testing Requirements 9.3-24
9.3.8.5 Instrumentation Requirements 9.3-24
9.3.8.6 COL Information 9.3-24
9.3.8.7 References 9.3-24
9.3.9 Hydrogen Water Chemistry System 9.3-24
9.3.9.1 Design Bases 9.3-24
9.3.9.2 System Description 9.3-24
9.3.9.3 Safety Evaluation 9.3-25
9.3.9.4 Inspection and Testing Requirements 9.3-25
9.3.9.5 Instrumentation and Controls 9.3-25
9.3.9.6 COL Information 9.3-25
9.3.9.7 References 9.3-25
9.3.10 Oxygen Injection System 9.3-26
9.3.10.1 Design Bases 9.3-26
9.3.10.2 System Description 9.3-26
9.3.10.3 Safety Evaluation 9.3-26
9.3.10.4 Testing and Inspection Requirements 9.3-27
9.3.10.5 Instrumentation 9.3-27
9.3.10.6 COL Information 9.3-27
9.3.10.7 References 9.3-27
9.3.11 Zinc Injection System 9.3-27
9.3.11.1 Design Bases 9.3-27
9.3.11.2 System Description 9.3-27
9.3.11.3 Safety Evaluation 9.3-28
9.3.11.4 Test and Inspections 9.3-28
9.3.11.5 Instrumentation and Controls 9.3-28
9.3.11.6 COL Information 9.3-28
9.3.11.7 References 9.3-28

Contents

9.3.12 Auxiliary Boiler System 9.3-28
9.3.12.1 Design Basis 9.3-28
9.3.12.2 System Description 9.3-28
9.3.12.3 Safety Evaluation 9.3-30
9.3.12.4 Testing and Inspection Requirements 9.3-30
9.3.12.5 Instrumentation 9.3-30
9.3.12.6 COL Information 9.3-30
9.3.12.7 References 9.3-30
9.4 Heating, Ventilation, and Air Conditioning 9.4-1
9.4.1 Control Building HVAC System 9.4-1
9.4.1.1 Design Bases 9.4-3
9.4.1.2 System Description 9.4-6
9.4.1.3 Safety Evaluation 9.4-11
9.4.1.4 Testing and Inspection Requirements 9.4-11
9.4.1.5 Instrumentation Requirements 9.4-12
9.4.1.6 COL Information 9.4-13
9.4.1.7 References 9.4-13
9.4.2 Fuel Building HVAC System (FBVS) 9.4-13
9.4.2.1 Design Bases 9.4-14
9.4.2.2 System Description 9.4-15
9.4.2.3 Safety Evaluation 9.4-16
9.4.2.4 Testing and Inspection Requirements 9.4-17
9.4.2.5 Instrumentation Requirements 9.4-17
9.4.2.6 COL Information 9.4-18
9.4.2.7 References 9.4-18
9.4.3 Radwaste Building Heating, Ventilation and Air Conditioning System 9.4-18
9.4.3.1 Design Bases 9.4-18
9.4.3.2 System Description 9.4-19
9.4.3.3 Safety Evaluation 9.4-21
9.4.3.4 Testing and Inspection Requirements 9.4-21
9.4.3.5 Instrumentation Requirements 9.4-21
9.4.3.6 COL Information 9.4-22
9.4.3.7 References 9.4-22
9.4.4 Turbine Building HVAC System 9.4-22
9.4.4.1 Design Bases 9.4-23
9.4.4.2 System Description 9.4-24
9.4.4.3 Safety Evaluation 9.4-27
9.4.4.4 Tests and Inspections 9.4-27
9.4.4.5 Instrumentation Requirements 9.4-27
9.4.4.6 COL Information 9.4-27
9.4.4.7 References 9.4-27
9.4.5 Engineered Safety Feature Ventilation System 9.4-28
9.4.6 Reactor Building HVAC System 9.4-28
9.4.6.1 Design Bases 9.4-28
9.4.6.2 System Description 9.4-30
9.4.6.3 Safety Evaluation 9.4-33
9.4.6.4 Testing and Inspection Requirements 9.4-34
9.4.6.5 Instrumentation Requirements 9.4-34
9.4.6.6 COL Information 9.4-35

Contents

9.4.6.7 References 9.4-35
9.4.7 Electrical Building HVAC System 9.4-35
9.4.7.1 Design Bases 9.4-36
9.4.7.2 System Description 9.4-37
9.4.7.3 Safety Evaluation 9.4-39
9.4.7.4 Testing and Inspection Requirements 9.4-40
9.4.7.5 Instrumentation Requirements 9.4-40
9.4.7.6 COL Information 9.4-40
9.4.7.7 References 9.4-41
9.4.8 Drywell Cooling System 9.4-41
9.4.8.1 Design Basis 9.4-41
9.4.8.2 System Description 9.4-42
9.4.8.3 Safety Evaluation 9.4-43
9.4.8.4 Testing and Inspection Requirements 9.4-43
9.4.8.5 Instrumentation Requirements 9.4-43
9.4.8.6 COL Information 9.4-44
9.4.8.7 References 9.4-44
9.4.9 Containment Inerting System 9.4-44
9.4.10 HVAC Component Information 9.4-44
9.4.10.1 Filtration 9.4-44
9.4.10.2 Supply and Exhaust Fans 9.4-45
9.4.10.3 Heating Coils/Elements 9.4-45
9.4.10.4 Cooling Coils 9.4-45
9.4.10.5 Dampers 9.4-46
9.4.10.6 Ductwork and Accessories 9.4-46
9.4.10.7 COL Information 9.4-46
9.4.10.8 References 9.4-46
9.5 Other Auxiliary Systems 9.5-1
9.5.1 Fire Protection System 9.5-1
9.5.1.1 Design Bases 9.5-1
9.5.1.2 System Description 9.5-3
9.5.1.3 Facility Features for Fire Protection 9.5-3
9.5.1.4 Fire Protection Water Supply System 9.5-4
9.5.1.5 Firewater Supply Piping, Yard Piping, and Yard Hydrants 9.5-6
9.5.1.6 Manual Suppression Means 9.5-7
9.5.1.7 Fixed Automatic Water Extinguishing Systems 9.5-8
9.5.1.8 Foam System 9.5-9
9.5.1.9 Smoke Detection and Fire Alarm System 9.5-9
9.5.1.10 Fire Barriers 9.5-10
9.5.1.11 Building Ventilation 9.5-11
9.5.1.12 Safety Evaluation 9.5-14
9.5.1.13 Inspection and Testing Requirements 9.5-22
9.5.1.14 Instrumentation Requirements 9.5-22
9.5.1.15 Fire Protection Program 9.5-23
9.5.1.16 COL Information 9.5-32
9.5.1.17 References 9.5-33
9.5.2 Communications System 9.5-33
9.5.2.1 Design Bases 9.5-33
9.5.2.2 System Description 9.5-34

Contents

9.5.2.3 Safety Evaluation 9.5-38
9.5.2.4 Inspection and Testing Requirements 9.5-38
9.5.2.5 COL Information 9.5-38
9.5.2.6 References 9.5-39
9.5.3 Lighting System 9.5-39
9.5.3.1 Safety Design Bases 9.5-39
9.5.3.2 Power Generation Design Bases 9.5-40
9.5.3.3 System Description 9.5-40
9.5.3.4 Safety Evaluation 9.5-44
9.5.3.5 Tests and Inspections 9.5-44
9.5.3.6 COL Information 9.5-44
9.5.3.7 References 9.5-44
9.5.4 Diesel Generator Fuel Oil Storage and Transfer System 9.5-44
9.5.4.1 Design Bases 9.5-44
9.5.4.2 System Description 9.5-46
9.5.4.3 Safety Evaluation 9.5-49
9.5.4.4 Tests and Inspections 9.5-49
9.5.4.5 Instrumentation Requirements 9.5-50
9.5.4.6 COL Information 9.5-51
9.5.4.7 References 9.5-51
9.5.5 Diesel Generator Jacket Cooling Water System 9.5-51
9.5.5.1 Design Bases 9.5-51
9.5.5.2 System Description 9.5-51
9.5.5.3 Safety Evaluation 9.5-53
9.5.5.4 Tests and Inspection 9.5-53
9.5.5.5 Instrumentation Requirements 9.5-53
9.5.5.6 COL Information 9.5-53
9.5.5.7 References 9.5-53
9.5.6 Diesel Generator Starting Air System 9.5-53
9.5.6.1 Design Bases 9.5-53
9.5.6.2 System Description 9.5-54
9.5.6.3 Safety Evaluation 9.5-55
9.5.6.4 Tests and Inspection 9.5-55
9.5.6.5 Instrumentation Requirements 9.5-55
9.5.6.6 COL Information 9.5-55
9.5.6.7 References 9.5-55
9.5.7 Diesel Generator Lubrication System 9.5-56
9.5.7.1 Design Bases 9.5-56
9.5.7.2 System Description 9.5-56
9.5.7.3 Safety Evaluation 9.5-57
9.5.7.4 Tests and Inspection 9.5-57
9.5.7.5 Instrumentation Requirements 9.5-57
9.5.7.6 COL Information 9.5-57
9.5.7.7 References 9.5-58
9.5.8 Diesel Generator Combustion Air Intake and Exhaust System 9.5-58
9.5.8.1 Design Bases 9.5-58
9.5.8.2 System Description 9.5-58
9.5.8.3 Safety Evaluation 9.5-59
9.5.8.4 Inspection and Testing Requirements 9.5-59

Contents

9.5.8.5 Instrumentation Requirements 9.5-60
9.5.8.6 COL Information 9.5-60
9.5.8.7 References 9.5-60

List of Tables

Table 9.1-1 Pools Served by FAPCS and IC/PCCS 9.1-40
Table 9.1-2 FAPCS Operating Modes 9.1-41
Table 9.1-3 FAPCS Safety Classification, Quality Group and Seismic Category 9.1-42
Table 9.1-4 (Deleted) 9.1-44
Table 9.1-5 Reference Codes and Standards 9.1-45
Table 9.1-6 Heavy Load Equipment Used to Handle Light Loads and Related Refueling Handling Tasks 9.1-46
Table 9.1-7 Summary of Heavy Load Operations 9.1-47
Table 9.1-8 Design Parameters for FAPCS System Components 9.1-50
Table 9.2-1 PSWS Heat Loads 9.2-26
Table 9.2-2 PSWS Component Design Characteristics 9.2-27
Table 9.2-3 RCCWS Nominal Heat Loads 9.2-28
Table 9.2-4 RCCWS Component Design Characteristics 9.2-31
Table 9.2-5 RCCWS Configuration by Mode 9.2-32
Table 9.2-6 Makeup Water System Supplied Equipment 9.2-33
Table 9.2-7 Makeup Water System Demineralized Water Storage Tank Nominal Water Quality Requirements 9.2-34
Table 9.2-8 Makeup Water System Demineralizer Effluent Nominal Water Quality Requirements 9.2-35
Table 9.2-9 Major Makeup Water System Components 9.2-36
Table 9.2-10 Capacity Requirements for the Condensate Storage Tank 9.2-36
Table 9.2-11 Chilled Water System Component Design Characteristics 9.2-37
Table 9.2-12 Turbine Component Cooling Water System Heat Loads 9.2-38
Table 9.3-1 Process Sampling System Measurements 9.3-31
Table 9.3-2 Major Equipment for EFDS 9.3-33
Table 9.3-3 Safety-Related Portions of the SLC System 9.3-39
Table 9.3-4 Safety-Related Interfaces for the SLC System 9.3-40
Table 9.3-5 SLC ATWS Mitigation Function Parameters 9.3-41
Table 9.3-6 Instrument Air System Requirements 9.3-42
Table 9.3-7 Service Air System Requirements 9.3-43
Table 9.3-8 High Pressure Nitrogen Supply System Requirements 9.3-44
Table 9.4-1 Design Parameters for the CBVS 9.4-47
Table 9.4-2 Major Equipment for CBVS 9.4-48
Table 9.4-3 Design Parameters for FBVS 9.4-51
Table 9.4-4 Major Equipment for FBGAVS 9.4-52
Table 9.4-5 Major Equipment for FBFPVS 9.4-54
Table 9.4-6 RWVS Design Conditions 9.4-55
Table 9.4-7 Major Equipment for the RWVS 9.4-56
Table 9.4-8 Design Parameters for RBVS 9.4-57
Table 9.4-9 Major Equipment for CLAVS 9.4-59
Table 9.4-10 Major Equipment for REPAVS 9.4-60
Table 9.4-11 Major Equipment for CONAVS 9.4-61
Table 9.4-12 Drywell Cooling System Design Parameters 9.4-63
Table 9.4-13 Drywell Cooling System Fan Cooling Units 9.4-64
Table 9.4-14 Drywell Cooling System Heat Loads 9.4-65

List of Tables

Table 9.4-15 Design Parameters for TBVS 9.4-66
Table 9.4-16 Design Parameters for EBVS 9.4-69
Table 9.4-17 Industrial Codes and Standards Applicable to ESBWR HVAC 9.4-73
Table 9.5-1 Lists of Applicable Codes for Fire Protection 9.5-61
Table 9.5-2 FPS Component Design Characteristics 9.5-64
Table 9.5-3 Typical Luminance Ranges for Normal Lighting 9.5-65

List of Figures

Figure 9.1-1. FAPCS Schematic Diagram 9.1-51
Figure 9.1-2. Inclined Fuel Transfer System 9.1-52
Figure 9.1-3. Refueling Sequence 9.1-53
Figure 9.2-1. Plant Service Water System Simplified Diagram 9.2-40
Figure 9.2-2a. Reactor Component Cooling Water System 9.2-41
Figure 9.2-2b Reactor Component Cooling Water System 9.2-42
Figure 9.2-3. Chilled Water System Simplified Diagram 9.2-43
Figure 9.2-4. Turbine Component Cooling Water System Configuration 9.2-44
Figure 9.3-1. Standby Liquid Control System Simplified Diagram 9.3-45
Figure 9.3-1a. Standby Liquid Control System Simplified Process Flow Diagram 9.3-46
Figure 9.3-2. (Deleted) 9.3-47
Figure 9.3-3. Service Air and Instrument Air System Simplified Diagram 9.3-48
Figure 9.3-4. HPNSS Simplified Diagram 9.3-49
Figure 9.3-5. Hydrogen Water Chemistry System Simplified Diagram 9.3-50
Figure 9.4-1. CRHAVS Simplified System Diagram 9.4-77
Figure 9.4-2. CRHAVS Air Flow Diagram 9.4-78
Figure 9.4-3. CBGAVS Set A Simplified System Flow Diagram 9.4-79
Figure 9.4-4. CBGAVS Set B Simplified System Flow Diagram 9.4-80
Figure 9.4-5. FBGAVS Simplified System Diagram 9.4-81
Figure 9.4-6. FBFPVS Simplified System Diagram 9.4-82
Figure 9.4-7a. RWCRVS Simplified Subsystem Diagram 9.4-83
Figure 9.4-7b. RWGAVS Simplified Subsystem Diagram 9.4-84
Figure 9.4-8. TBVS Simplified System Diagram 9.4-85
Figure 9.4-9. CLAVS Simplified System Diagram (Typical Train A/B) 9.4-86
Figure 9.4-10. CONAVS Simplified System Diagram (Typical Train A/B) 9.4-87
Figure 9.4-11. REPAVS Simplified System Diagram 9.4-88
Figure 9.4-12. EBVS Simplified System 9.4-89
Figure 9.4-13. DCS Simplified System Diagram 9.4-90
Figure 9.4-14. (Deleted) 9.4-91
Figure 9.5-1. Fire Protection System Simplified Diagram 9.5-66
Figure 9.5-2. (Deleted) 9.5-67
Figure 9.5-3. (Deleted) 9.5-68
Figure 9.5-4. (Deleted) 9.5-69
Figure 9.5-5. (Deleted) 9.5-70
Figure 9.5-6. (Deleted) 9.5-71
Figure 9.5-7. (Deleted) 9.5-72
Figure 9.5-8. (Deleted) 9.5-73
Figure 9.5-9. Standby Diesel Generator Fuel Oil Storage and Transfer System & Air Intake and Exhaust System Diagram 9.5-74
Figure 9.5-9a. Ancillary Diesel Generator Fuel Oil Storage and Transfer System Diagram 9.5-75
Figure 9.5-10. Standby Diesel Generator Jacket Cooling Water System Diagram 9.5-76
Figure 9.5-11. Standby Diesel Generator Starting Air System Diagram 9.5-77
Figure 9.5-12. Standby Diesel Generator Lubrication System Diagram 9.5-78

9. AUXILIARY SYSTEMS

9.1 FUEL STORAGE AND HANDLING

Upon receipt of the new fuel bundles at the reactor site, each fuel bundle container is uncrated from its shipping crate and the fuel bundle container is raised to the refueling floor in the Fuel Building (FB). The fuel bundles are removed from the container and moved to the new fuel inspection stand where the fuel bundles are inspected and the fuel channels are installed to create fuel assemblies.

The fuel assemblies are then placed in the Spent Fuel Pool for transfer to the Reactor Building (RB) Buffer Pool via the Inclined Fuel Transfer System (IFTS). The newly channeled fuel assemblies are then moved to the new fuel storage racks in the RB buffer pool until time to move them into the reactor. New fuel can be transferred through the IFTS during normal operation.

There are three areas where new and spent fuel are stored. In the FB there are spent fuel storage racks for storing new or spent fuel. In the RB there are new fuel storage racks for storing new fuel and a small array of spent fuel racks in a deep pit in the buffer pool for temporary storage of spent fuel.

The new fuel storage racks in the buffer pool can store a minimum of 476 new fuel assemblies. The fuel assemblies are stored in underwater storage racks located adjacent to the reactor well. The racks are side loading and are accessed using the refueling machine.

Spent fuel removed from the reactor vessel must be stored underwater. There are two locations containing spent fuel storage racks. Buffer racks in the deep pit area of the RB buffer pool are used to temporarily store discharged fuel or fuel to be returned to the reactor during fuel shuffles. Movement of spent fuel in the buffer pool or through the IFTS is limited to reactor shutdown. Spent fuel cannot be stored in the buffer pool during normal operation. Spent fuel racks for long-term storage of spent fuel are located in the FB. These spent fuel storage racks are located at the bottom of the storage pools at a depth sufficient to provide adequate radiological shielding. The spent fuel storage pool water is processed by the Fuel and Auxiliary Pools Cooling System (FAPCS), which provides cooling to the spent fuel and maintains the spent fuel storage pool water quality. The buffer pool deep pit storage area in the RB can store a maximum of 154 fuel assemblies. Together, the spent fuel storage racks provided in the spent fuel storage pool and buffer pool deep pit have the capacity to store the fuel assemblies resulting from ten calendar years of operation plus one full core offload. However, the structures (including pool size) and systems are designed for expansion to store spent fuel assemblies resulting from 20 years of operation plus one full core offload.

9.1.1 New Fuel Storage

9.1.1.1 Design Bases

Nuclear Design

The new fuel storage racks in the buffer pool are designed to assure that the fully loaded array is subcritical by at least 5% $\Delta k/k$.

Monte Carlo techniques are employed in the calculations performed to assure that the effective multiplication factor (k_{eff}) does not exceed 0.95 under all normal and abnormal conditions.

The biases between the calculated results, experimental results, and the uncertainty in the calculation, are taken into account as part of the calculation procedure to assure that the specific k_{eff} limit is met.

9.1.1.2 Storage Design

The new fuel storage racks in the buffer pool can store a minimum of 476 new fuel assemblies.

The new fuel storage rack design complies with the requirements of General Design Criterion (GDC) 2 by meeting the guidance of RGs 1.13, 1.29, and 1.117. The new fuel storage racks are located within a Seismic Category I structure that is designed to withstand the effects of extreme wind and tornado missiles. In addition, the racks conform to the applicable provisions of industry standards American Nation Standards Institute/American Nuclear Society 57.1 (ANSI/ANS 57.1) and RG 1.13 and therefore meet the requirements of GDC 61 and GDC 62.

9.1.1.3 Mechanical and Structural Design

The new fuel storage racks contain storage space in the RB buffer pool for a minimum of 476 new fuel assemblies. They are designed to withstand all credible static and dynamic loadings.

The racks are designed to protect the fuel assemblies and fuel bundles from excessive physical damage under normal and abnormal conditions as when struck by a dropped fuel assembly or other equipment.

The racks are constructed in accordance with the Quality Assurance (QA) Requirements of 10 CFR 50, Appendix B.

The racks are classified as nonsafety-related and Seismic Category I.

9.1.1.4 Material Considerations

Material used in the fabrication of the new fuel storage racks is limited to the use of stainless steel in accordance with the latest issue of the applicable American Society for Testing and Materials (ASTM) specifications at the time of equipment order. The new fuel racks are fabricated from Type 304L stainless steel, which conforms to ASTM A240/A240M.-07e1 The appropriate weld wire for the Type 304L components (E308L or ER308L) is utilized in the fabrication process. Materials are chosen for their corrosion resistance and their ability to be formed and welded with consistent quality.

9.1.1.5 Dynamic and Impact Analysis

A standard dynamic analysis, using the appropriate response spectra, is performed to demonstrate compliance to design requirements. The input excitation for these analyses utilizes the horizontal and vertical response spectra provided in Section 3.7.

Vertical impact analysis is performed because the fuel assembly is held in the storage rack by its own weight without any mechanical hold-down devices. Reference 9.1-1 provides the documentation for the dynamic and impact analyses.

9.1.1.6 Facilities Description (New Fuel Storage)

Pool Storage

The new fuel storage racks in the RB buffer pool can store a minimum of 476 new fuel assemblies. The racks have double rows of storage positions for assemblies that are side loaded into the storage racks. Because the racks are open on the side to allow side loading, the weight of the fuel assemblies placed in the storage position actuates a mechanism that restrains the assemblies in position. The racks are floor mounted.

9.1.1.7 Safety Evaluation

Criticality Control

The design of the new fuel storage racks provides for an k_{eff} for storage conditions equal to or less than 0.95. To ensure that design criteria are met, the following normal and abnormal new fuel storage conditions were analyzed:

- Normal positioning in the new fuel array; and
- Eccentric positioning in the new fuel array.

The new fuel storage area accommodates fuel ($k_{inf} \leq 1.35$ at 20°C [68ºF] in standard core geometry) with no safety implications.

Structural Design

The new fuel storage racks are designed to meet Seismic Category I requirements. Stresses in a fully loaded rack do not exceed stresses specified by the applicable American Society of Mechanical Engineers (ASME) Codes and Standards when subjected to seismic loads.

The storage rack structure is designed to withstand the impact resulting from a falling fuel assembly.

Procedural fuel handling requirements and equipment design dictate that no more than one bundle at a time can be handled over the storage racks. The structural arrangement is such that no lateral displacement of the fuel occurs; therefore, subcritical spacing is maintained. An irradiated fuel assembly cannot be placed in a new fuel storage rack. The Combined License (COL) applicant shall describe the programs that address fuel handling operations, including criticality safety (COL 9.1-4-A).

The racks are fabricated from material specified to ASTM standards.

Protection Features of the New Fuel Storage Facilities

The new fuel storage racks are housed in the RB. The RB is Seismic Category I and designed for natural phenomena such as tornadoes, tornado missiles, floods and high winds.

The refueling machine is used to move fuel in the RB. It contains interlocks to prevent overloads from being applied to the bail of the fuel assembly. Thus, the transfer devices used for new fuel handling to the new fuel rack cannot impose excessive uplift loads on the rack.

Should it become necessary to move major loads along or over the pools, administrative controls require that the load be moved over the empty portion of the buffer pool and avoid the area of the

new fuel racks. Procedures are written for fuel handling. The COL applicant shall describe the programs that address fuel handling operations (COL 9.1-4-A).

9.1.2 Spent Fuel Storage

9.1.2.1 Design Bases

The spent fuel storage design complies with the requirements of GDC 2, 4, 61, 62, and 63 by meeting the applicable guidance of Standard Review Plans 9.1.1 and 9.1.2; RGs 1.13, 1.29, 1.115, and 1.117; and ANSI/ANS 57.1-1992 as follows:

GDC 2

The spent fuel storage facilities and the structure within which they are housed are designed to protect against the effects of natural phenomena without loss of safety function, in accordance with the guidance of RGs 1.13, 1.29, and 1.117, and comply with GDC 2 requirements.

GDC 4

In accordance with the guidance of RG 1.13, the spent fuel storage facilities are designed to protect the fuel from damage caused by dropping of fuel assemblies, bundles, or other objects onto stored fuel. As noted above in the discussion of compliance with GDC 2, the FB and the spent fuel storage components which it houses are designed to protect against the effects of tornado winds, including tornado missiles. Because of the favorable orientation of the turbine shafts, spent fuel storage components are located outside the turbine missile low-trajectory strike zone. The spent fuel storage system and components are adequately protected against dynamic effects, in accordance with the guidance of RGs 1.13, 1.115, and 1.117, and comply with GDC 4 requirements.

GDC 61

Compliance with GDC 61 is demonstrated by conformance with applicable provisions of RG 1.13. These include design to control airborne release of radioactive material; design of drains, gates, and weirs to prevent drainage of coolant inventory below an adequate shielding depth; provision of adequate coolant flow to spent fuel racks; and a system for detecting and containing spent fuel pool liner leakage. These design features have been included, in accordance with the applicable guidance of RG 1.13, and comply with GDC 61 requirements.

GDC 62

Criticality in the spent fuel storage pool is prevented by the presence of fixed neutron absorbing material to assure k_{eff} does not exceed 0.95 under all normal and abnormal conditions which include earthquake and load drop. The spent fuel storage system is designed to the applicable provisions of ANSI/ANS 57.1, which specify criteria for compliance with GDC 62. Individual fuel racks are spaced less than one fuel assembly apart so that a fuel assembly cannot be inserted between racks. The spent fuel storage system conforms to the applicable provisions of RG 1.13 and ANSI/ANS 57.1 and complies with GDC 62 requirements.

GDC 63

The fuel storage monitoring section of GDC 63 applies to Sections 9.4.2 and 11.5. Instrumentation associated with spent fuel storage conforms to the guidance of RG 1.13 and complies with GDC 63 requirements.

9.1.2.2 Nuclear Design

A full array in the loaded spent fuel rack is designed to be subcritical by at least 5% Δk/k. Neutron-absorbing material (borated stainless steel in accordance with ASTM A887-89), as an integral part of the design, is employed to assure that the calculated k_{eff}, including biases and uncertainties, does not exceed 0.95 under all normal and abnormal conditions.

Monte Carlo techniques are employed in the calculations performed to assure that k_{eff} does not exceed 0.95 under all normal and abnormal conditions (see Reference 9.1-2).

The biases between the calculated results and experimental results, as well as the uncertainty involved in the calculations, are taken into account as part of the calculative procedure to assure that the specific k_{eff} limit is met.

9.1.2.3 Storage Design

The fuel storage racks provided in the Spent Fuel Pool in the FB provide for storage of 3504 irradiated fuel assemblies, which is enough storage capacity for 10 calendar years of plant operation. The fuel storage racks in the RB buffer pool deep pit can hold a maximum of 154 spent fuel assemblies. Together, the spent fuel storage racks provided in the spent fuel pool and buffer pool deep pit, accommodate the spent fuel resulting from 10 calendar years of plant operation plus one full-core offload.

9.1.2.4 Mechanical and Structural Design

[*The spent fuel storage racks in the RB buffer pool and in the Spent Fuel Pool in the FB contain storage space for fuel assemblies. A standard dynamic analysis using the appropriate response spectra is performed to demonstrate compliance to design requirements. They are designed to withstand all credible static and dynamic loadings. The racks are designed to protect the fuel assemblies from excessive physical damage which may cause the release of radioactive materials in excess of RG 1.183 requirements, under normal and abnormal conditions caused by impact from fuel assemblies, or other equipment.*

The Spent Fuel Pool and buffer pool are reinforced concrete structures with a stainless steel liner. Fuel storage racks and pool liners are designed to meet Seismic Category I requirements. Pool liner and anchorage are designed to the same loads and load combinations as the pool concrete structure in accordance with Table 3.8-15, except that load factors for all cases are equal to 1.0, and the acceptance criteria follow ASME Section III, Division 2, CC-3700. Pool liners are evaluated to ensure structural integrity under fuel handling accidents. The bottoms of the pool gates are at least 3.05 m (10.0 ft) above TAF to provide adequate shielding and cooling. Pool fill lines enter the pool above the safe shielding water level and overflow weirs are located above normal water level. Redundant anti-siphon vacuum breakers are located at the high point of the pool circulation lines to preclude a pipe break from siphoning the water from the pool and jeopardizing the safe water level.

The racks include individual solid tube storage compartments, which provide lateral restraints over the entire length of the fuel assembly or bundle. The weight of the fuel assembly or bundle is supported axially by the rack fuel support. Lead-in guides at the top of the storage spaces provide guidance of the fuel during insertion. There are no unanalyzed locations within a fuel rack or array of fuel racks. Individual racks are spaced less than one fuel assembly apart so that

a fuel assembly cannot be inserted between racks. In the event that a fuel assembly is lowered adjacent to an exterior rack, this configuration is analyzed.

Materials used for construction are specified in accordance with the latest issue of applicable ASTM specifications at the time of equipment order. The racks are constructed in accordance with the QA requirements of 10 CFR 50, Appendix B.

The structural integrity of the rack is demonstrated for the loads and load combinations described below using linear elastic design methods.

The applied loads to the rack are as follows:

- *Dead loads - weight of rack and fuel assemblies plus the hydrostatic loads;*
- *Live loads - effect of lifting an empty rack during installation;*
- *Thermal loads - effects caused by pool temperature changes occurring as a result of normal operating or abnormal conditions, as applicable;*
- *Dynamic loads (Square Root of the Sum of the Squares [SRSS] combination of Seismic, Loss-of-Coolant-Accident [LOCA],Safety Relief Valve [SRV] loads);*
- *Fuel drop load - effect of an accidental drop of the heaviest fuel assembly or bundle from the maximum possible height; and*
- *Stuck fuel load - upward force on the rack caused by a postulated stuck fuel assembly.*

The load combinations considered in the rack design are as follows:

- *Dead plus live loads;*
- *Dead plus live plus thermal loads;*
- *Dead plus live plus thermal plus stuck fuel loads;*
- *Dead plus live plus thermal plus dynamic loads; and*
- *Dead plus live plus fuel drop loads.*

Stress analyses are performed by classical methods based upon shears and moments developed by the dynamic method. Using the given loads, load conditions and analytical methods, stresses are calculated at critical sections of the rack and compared to acceptance criteria referenced in ASME Boiler and Pressure Vessel (B&PV) Code Section III, Subsection NF. In addition, the design of the spent fuel storage racks and associated support structures meet the requirements of Appendix D to the Standard Reviw Plan (SRP) 3.8.4. See Reference 9.1-1 for the results of the stress analysis for the spent fuel racks.]*

Text sections that are bracketed and italicized with an asterisk following the brackets are designated as Tier 2. Prior NRC approval is required to change.

9.1.2.5 Thermal-Hydraulic Design

During normal operation the fuel storage racks are designed to provide sufficient natural convection coolant flow through the rack and fuel to remove decay heat without reaching excessive water temperatures (121°C; 250°F). Stress properties of the materials used in rack

fabrication are considered at this temperature, therefore, the temperature of coolant exiting the racks shall not exceed 121°C (250°F).

In the spent fuel storage pool, the bundle decay heat is removed by FAPCS recirculation flow to maintain the pool temperature below 48.9ºC (120ºF) during normal conditions.

A thermal-hydraulic analysis to evaluate the rate of naturally circulated flow and the maximum rack exit temperature is performed. See Reference 9.1-1 for the thermal-hydraulic analysis results.

In the event of loss of FAPCS cooling trains, boiling can occur (See Subsection 9.1.3.2). The structural acceptance criterion for the fuel storage racks is that the storage rack design not exceed the allowable stress levels given in the ASME B&PV Code, Section III, Subsection NF during boiling.

9.1.2.6 Material Considerations

Material used in the fabrication of the spent fuel storage racks is limited to the use of stainless steel in accordance with the latest issue of the applicable ASTM specifications at the time of equipment order. The spent fuel rack ends are fabricated from Type 304L stainless steel, which conforms to ASTM A240/A240M-07.1. The appropriate weld wire for the Type 304L components (E308L or ER308L) is utilized in the fabrication process. The interlocking panels that form the fuel element storage matrix are fabricated from Type 304B7 borated stainless steel, which conforms to ASTM A887-89 (Unified Numbering System (UNS) Designation S30467, Grade B, 1.75-2.25% boron inclusion). There is no welding of borated stainless steel. Fuel rack feet are fabricated from Type 630 (17-4PH) age-hardened stainless steel, which conforms to ASTM A564/A564M. Materials are chosen for their corrosion resistance and their ability to be formed and welded with consistent quality.

The storage tube material is permanently marked with identification traceable to the material certifications. The fuel storage tube assembly is compatible with the environment of treated water and provides a design life of 60 years.

9.1.2.7 Facilities Description (Spent Fuel Storage)

There are two separate areas for storage of spent fuel assemblies. These are in a separate deep pit area in the buffer pool in the RB and in the Spent Fuel Pool in the FB.

Spent fuel storage racks in the buffer pool area provide storage in the RB for spent fuel received from the reactor vessel during the refueling operation. These racks can store a maximum of 154 spent fuel assemblies. The deep pit for the storage of spent fuel in the rack is designed such that the depth of the cavity allows the fuel to be placed in the rack with sufficient margin below the rack for natural convection cooling to occur and that the top of the active fuel remains below the top of the cavity. The spent fuel storage racks are top entry racks designed to preclude the possibility of criticality under normal and abnormal conditions.

Together, the spent fuel storage racks in the Spent Fuel Pool and the buffer pool deep pit provide storage for spent fuel received from the reactor vessel resulting from ten calendar years of operation plus one full-core offload. The cavity for the storage of spent fuel in the rack is designed such that the depth of the cavity allows the fuel to be placed in the rack with sufficient margin below the rack for natural convection cooling to occur and that the top of the active fuel

remains below the top of the cavity. The spent fuel storage racks are top entry racks designed to preclude the possibility of criticality under normal and abnormal conditions.

On a complete loss of the FAPCS active cooling capability and under the condition of maximum heat load associated with 20 years of fuel storage and a full-core offload, sufficient quantity of water is available in the Spent Fuel Pool above the top of active fuel (TAF) level to allow boiling for 72 hours and still have the TAF submerged under water.

9.1.2.8 Safety Evaluation

Criticality Control

The spent fuel storage racks are designed to assure that the fully loaded array is subcritical by at least 5% $\Delta k/k$.

Monte Carlo techniques are employed in the calculations performed to assure that k_{eff} does not exceed 0.95 under all normal and abnormal conditions.

The biases between the calculated results, experimental results, and the uncertainty in the calculation, are taken into account as part of the calculative procedure to assure that the specific k_{eff} limit is met. Criticality analysis is documented in Reference 9.1-2.

Structural Design and Material Compatibility Requirements:

- The support structure allows sufficient pool water flow for natural convection cooling of the stored fuel and allows the rack material temperatures to stay within limits.
- The racks include individual solid tube storage compartments, which provide lateral restraints over the entire length of the fuel assembly or bundle.
- The racks are fabricated from materials specified in accordance with the latest issue of applicable ASTM specifications at the time of equipment order.
- The racks are designed to withstand the impact force generated by the vertical free-fall drop of a fuel assembly and its handling tool from the maximum height expected during normal fuel handling (See Reference 9.1-1 for analysis).
- The rack is designed to withstand a pull-up force in the event a fuel assembly is stuck.
- The fuel storage pools have adequate water shielding for the stored spent fuel. See Subsection 9.1.3 relative to the control of water level in these pools.

RG 1.13 is applicable to spent fuel storage facilities. The RB and FB, which contains the fuel storage facilities, including the storage racks and pool, are designed to protect the fuel from damage caused by:

- Natural events such as earthquake, high winds and flooding; and
- Mechanical damage caused by dropping of fuel assemblies, bundles, or other objects onto stored fuel.

Summary of Radiological Considerations

By adequate design and careful operational procedures, the design bases of the spent fuel storage arrangement are satisfied. Thus, the exposure of plant personnel to radiation is maintained well

below regulatory limits and in accordance with As Low As Reasonably Achievable (ALARA) principles. Further details of radiological considerations, including those for the spent fuel storage arrangement, are presented in Chapter 12.

9.1.3 Fuel and Auxiliary Pools Cooling System

9.1.3.1 Design Bases

Safety Design Basis

FAPCS is a nonsafety-related system, except for the following safety-related items:

- Containment isolation valves,
- High-pressure interface with the Reactor Water Cleanup / Shutdown Cooling System,
- Emergency water supply flow paths to the spent fuel pool and Isolation Condenser/Passive Containment Cooling System (IC/PCCS) pools; andGravity Driven Cooling System (GDCS) interconnecting pipes.

Power Generation Design Basis

FAPCS provides continuous cooling and cleaning of the spent fuel storage pool during normal plant operation. It also provides occasional cooling and cleaning of various pools located inside the containment during normal plant operation and refueling outages.

9.1.3.2 System Description

System Description Summary

The FAPCS consists of two physically separated cooling and cleanup trains, each with 100% capacity during normal operation. Each train contains a pump, a heat exchanger and a water treatment unit for cooling and cleanup of various cooling and storage pools except for the IC/PCCS pools (refer to Figure 9.1-1). A separate subsystem with its own pump, heat exchanger and water treatment unit is dedicated for cooling and cleaning of the IC/PCCS pools independent of the FAPCS cooling and cleanup train operation during normal plant operation (refer to Figure 9.1-1).

The primary design function of FAPCS is to cool and clean pools located in the containment, RB and FB (refer to Table 9.1-1) during normal plant operation. FAPCS provides flow paths for filling and makeup of these pools during normal plant operation and during post-accident conditions, as necessary.

FAPCS is also designed to provide the following accident recovery functions in addition to the Spent Fuel Pool cooling function:

- Suppression pool cooling (SPC);
- Drywell spray;
- Low pressure coolant injection (LPCI) of suppression pool water into the Reactor Pressure Vessel (RPV); and
- Alternate Shutdown Cooling.

In addition to its accident recovery function, the SPC mode is also designed to automatically initiate during normal operation in response to a high temperature signal from the suppression pool.

A crosstie to the Reactor Water Cleanup/Shut Down Cooling (RWCU/SDC) System is provided in the suppression pool suction and discharge headers such that this system may be used as an alternative for post-accident decay heat removal. For details regarding the crosstie, refer to Subsection 5.4.8.

Redundancy and physical separation are provided in accordance with SECY-93-087 for active components in lines dedicated to LPCI and SPC modes.

During normal plant operation, at least one FAPCS cooling and cleanup train is available for continuous operation to cool and clean the water of the Spent Fuel Pool, while the other train can be placed in standby or other mode for cooling the GDCS pools and suppression pool. If necessary during a refueling outage, both trains may be used to provide maximum capacity for cooling the Spent Fuel Pool. The water treatment units can be bypassed when necessary, and will be bypassed automatically on a high temperature signal downstream of the heat exchangers.

Each FAPCS cooling and cleanup train has sufficient flow and cooling capacity to maintain Spent Fuel Pool bulk water temperature below 48.9°C (120°F) under normal Spent Fuel Pool heat load conditions (normal heat load condition is defined as irradiated fuel in the Spent Fuel Pool resulting from 20 years of plant operations). During the maximum Spent Fuel Pool heat load conditions of a full core offload plus irradiated fuel in the Spent Fuel Pool resulting from 20 years of plant operations, both FAPCS cooling and cleanup trains are needed to maintain the bulk temperature below 60°C (140°F).

During a loss of the FAPCS cooling trains, cooling of the Spent Fuel Pool, buffer pool and IC/PCCS pools is accomplished by allowing the water to heat and boil. The Spent Fuel Pool water level of at least 14.35 m (47 ft) and a free volume above the TAF of at least 1690 m^3 (59700 ft^3). The buffer pool is maintained at a water level of at least 6.7 m (22.0 ft) and a free volume above TAF of at least 288 m^3 (10169 ft^3). For both pools, the water levels and free volumes are sufficient to ensure that following a loss of active cooling without makeup that persists for 72 hours, the water levels in the pools remain above TAF. After 72 hours, post-accident makeup water can be provided through safety-related connections to the Fire Protection System (FPS) or another onsite or offsite water source.

All operating modes (refer to Table 9.1-2) are manually initiated and controlled from the Main Control Room (MCR), except the SPC mode, which is initiated either manually, or automatically on high suppression pool water temperature signal. Instruments are made for indication of operating conditions to aid the operator during the initiation and control of system operation. Provisions are provided to prevent inadvertent draining of the pools during FAPCS operation by including anti-siphon holes on all FAPCS piping that is normally submerged.

The FAPCS is designed to provide for the collection, monitoring, and drainage of pool liner leaks from the spent fuel pools, auxiliary pools, and IC/PCCS pools (refer to Table 9.1-1) to the Liquid Waste Management System.

Containment isolation valves are provided on the lines that penetrate the primary containment and are powered from independent safety-related sources.

The containment isolation valves are automatically closed upon receipt of a containment isolation signal from the Leakage Detection and Isolation System (LD&IS), with the exception of the containment isolation valves needed for post-accident recovery modes, which do not receive an isolation signal.

The FAPCS is a nonsafety-related system with the exception of piping and components required for:

- Containment isolation;
- Refilling of the IC/PCCS pools and the Spent Fuel Pool with post-accident water supplies from the Fire Protection System or another onsite or offsite source; and
- The high-pressure interface with the Reactor Water Cleanup/Shutdown Cooling system used for low pressure coolant injection.

The piping and components needed for the following functions are classified as Regulatory Treatment of Non-Safety Systems (RTNSS):

- Suppression pool cooling
- Low pressure coolant injection

This includes the suction line from the suppression pool, all of the piping and components in the cooling and cleaning trains except the water treatment units, and the discharge lines to the suppression pool and the LPCI interface up to the safety-related isolation valves.

The FAPCS piping and components that are required to support safety-related or accident recovery function have Quality Group B or C and Seismic I or II classification (Table 9.1-3). A Seismic I classification is required for all safety-related functions. The remaining nonsafety-related piping and components that support accident recovery functions are Seismic Category II. This classification satisfies the requirements of SRP 9.1.3 Section I.1.

Detailed System Description

The FAPCS is provided with two cooling and cleanup trains with 100% capacity during normal operation. Each FAPCS train is physically separated and has one pump, one heat exchanger and one water treatment unit consisting of a prefilter and a demineralizer.

A manifold of four motor-operated valves is attached to each end of the FAPCS cooling and cleanup trains (refer to Figure 9.1-1). These manifolds are used to connect the FAPCS cooling and cleanup train with one of the two pairs of suction and discharge piping loops to establish the desired flow path during FAPCS operation. One loop is used for the fuel pools and auxiliary pools, and the other loop for the GDCS pools and suppression pool and for injecting water to drywell spray sparger and reactor vessel via the RWCU/SDC System and feedwater pipes.

The use of manifolds with proper valve alignment and separate suction-discharge piping loops:

- Allows operating of one train independent of the other train to permit on-line maintenance or dual mode operation using separate trains if necessary; and
- Prevents inadvertent draining of the pool and minimizes mixing of contaminated water in the Spent Fuel Pool with cleaner water in other pools.

Each water treatment unit is equipped with a prefilter, a demineralizer and a post-strainer. A bypass line is provided to permit bypass of the water treatment unit, when necessary. To protect demineralizer resin, the water treatment units are bypassed automatically on a high temperature signal. The prefilter and demineralizers of the water treatment units are located in shielding cells so that radiation exposure of plant personnel is within acceptable limits.

Proper physical separation is provided between the active components of the two redundant trains to assure operation of one train in the event of failure of the other train.

A reactor makeup water discharge line is provided for injecting suppression pool water or water from the Fire Protection System to the reactor vessel via Reactor Water Cleanup/Shutdown Cooling System (SDC) Loop B and Feedwater Loop A discharge pipes. The suction location in the suppression pool is designed with consideration given to the strainer plugging issues encountered in previous operating experience. The strainer is designed with perforated plate hole sizes of ≤ 2.508 mm (0.0988 inches). This operating mode can utilize two sources of water. The primary flow path draws water from the suppression pool and uses one of the FAPCS trains to discharge it into the RWCU/SDC System. This injection line includes redundant shutoff valves such that the flow path branches to include two parallel flow paths, each with a motor-operated gate valve (refer to Figure 9.1-1). This line branches again downstream of the shutoff valves to include a pair of safety-related testable check valves which isolate the FAPCS from the safety-related RWCU/SDC System piping downstream. A secondary flow path draws water from the Fire Protection Storage Tank using an Adjustable Speed Drive (ASD) equipped motor-driven pump located in the fire pump enclosure. This secondary flow path injects its water into the primary flow path upstream of the motor-operated shutoff valves. All piping between the RWCU/SDC System and the motor-operated shutoff valves are designed to withstand the full reactor pressure. The motor-operated shutoff valves fail as-is, are normally closed, and are prevented from opening by a high reactor pressure signal from the Nuclear Boiler System to protect the low pressure portion of FAPCS piping and components. A pressure relief valve is located upstream of the motor-operated shutoff valves. Any leakage of high-pressure coolant through the safety-related check valves and motor-operated shutoff valves is discharged through the pressure relief valve and measured before being sent to the Liquid Waste Management System. Redundant valves are contained in separate fire zones for improved reliability.

A drywell spray discharge line and a ring header with spray nozzles mounted on the header are provided for spraying water inside the drywell to reduce the drywell pressure 72 hours following a LOCA to assist in post-accident recovery. In order to prevent excessive negative differential pressure on the containment liner the drywell spray flow rate must be less than 127 m^3/hr (560 gpm). The drywell spray flow rate is maintained below this value by a sized, flow-restricting orifice located in the drywell spray discharge line. The ring header equipped with spray nozzles is located in the drywell.

A separate cooling and cleanup subsystem completely independent of FAPCS cooling and cleanup trains and their piping loop is provided for cooling and cleanup of the IC/Passive Containment Cooling System (PCCS) pools to prevent radioactive contamination of these pools. The subsystem consists of one pump, one heat exchanger, and one water treatment unit .

FAPCS contains two containment isolation valves on the lines that penetrate the primary containment.

For details related to FAPCS containment isolation, refer to Subsection 6.2.4.3.2.

Pipes equipped with normally closed manual valves are provided for establishing flow paths from onsite or offsite post-accident water supplies or the Fire Protection System to refill the IC/PCCS pools and Spent Fuel Pool following a design basis loss-of-coolant accident.

With the exception of the suppression pool suction line, anti-siphoning devices are used on all submerged FAPCS piping to prevent unintended drainage of the pools. The anti-siphoning holes for all FAPCS discharge lines are located at the elevation of normal water level to prevent significant draining of the pool in case of a suction line break at a lower elevation. The anti-siphoning holes in the suction piping of the GDCS Pools and IC/PCCS cooling and cleanup subsystem are located at the elevation of minimum water level to prevent significant draining of the pool in case of a suction line break at a lower elevation. The post-accident makeup lines to the Spent Fuel Pool and IC/PCCS Pools are not submerged below the normal water level. Analysis will be performed on the suppression pool suction line, per the requirements of Subsection 3.6.2.1.2 for moderate energy piping, to show that the piping from the pool to the containment isolation valves remains below the threshold limit for postulating leakage cracks.

The spent fuel pool is equipped with drainage paths behind the liner welds. These paths are designed to:

- Prevent stagnant water buildup behind the liner plate;
- Prevent the uncontrolled loss of contaminated pool water; and
- Provide liner leak detection and measurement.

The reactor well, equipment storage pool, buffer pool, upper and lower fuel transfer pools, cask pool, and IC/PCCS pools are also equipped with stainless steel liners, and are equipped with leak detection drains as part of the FAPCS. All leak detection drains are designed to permit free gravity drainage to the Liquid Waste Management System.

The containment isolation valves and other equipment required for the post-accident recovery function are provided with electric power from reliable power supplies. In the event of loss of offsite power, these electric power supplies are automatically connected to the onsite power sources. The electrical power supplies, control and instrumentation of the two FAPCS trains and their supporting systems are electrically and physically separated. Pneumatic power assisted containment isolation valves on the suppression pool supply and return lines are designed to fail as-is upon loss of its electric power or pneumatic (air or nitrogen) supply. All other containment isolation valves are designed to fail closed.

Provisions are provided to protect FAPCS components from fire, missile generating event, plant internal flooding, or seismic event of intensity up to and including a Safe Shutdown Earthquake (SSE) so that sufficient capability is retained for the fuel pool cooling function.

The FAPCS is designed to permit surveillance testing and in-service inspection of the safety-related components in accordance with ASME Section XI. Additionally, the FAPCS is designed to permit leak rate testing of its components required to perform containment isolation, in accordance with 10 CFR 50 Appendix J.

Piping and components completely separate from FAPCS pool cooling piping provide flow paths for post-accident makeup water transfer from offsite water supply sources to the IC/PCCS pool

and spent fuel pool. Active FAPCS valves located inside the RB are not required to operate to accomplish this makeup. This piping and components are designed to meet Quality Group C and Seismic Category I requirements.

The equipment storage pool and reactor well contains valves that, when opened, create a connection between the two IC/PCCS expansion pools through the equipment storage pool. These valves are designed to open on receiving a low level signal from either of the IC/PCCS expansion pools, and allow makeup water supplied to one of the IC/PCCS expansion pools to communicate with the other expansion pool.

Branch connections are provided on the suppression pool suction line and return line, which serve as attachments for portable external cooling equipment that bypasses the FAPCS cooling and cleanup trains.

FAPCS piping and components, relied upon for containment integrity, are designed to Quality Group B and Seismic Category I requirements.

System Operation

FAPCS cooling and cleanup trains operate continuously to cool and clean the water in the Spent Fuel Pool during normal plant operation and refueling outages. Operation of only one FAPCS cooling and cleanup train is sufficient to handle the cooling requirements under the normal heat load condition in the Spent Fuel Pool. Operation with up to two FAPCS cooling and cleanup trains is sufficient to handle the cooling requirement under the maximum heat load condition. At least one FAPCS cooling and cleanup train is available for cooling the Spent Fuel Pool, except for a short period as long as the water temperature in the pool remains below the maximum temperature limit for normal operation.

During a refueling outage, FAPCS can be operated in the Fuel and Auxiliary Pool Cooling and Cleanup mode with both cooling and cleanup trains under the maximum heat load condition in the Spent Fuel Pool.

If necessary the FAPCS can operate in a dual mode using two separated FAPCS cooling and cleanup trains with separate suction and discharge piping loops. However, dual mode operation using a single train is prohibited by logic in the Nonsafety-related Distributed Control and Information System (N-DCIS), because it could result in redistribution of water between pools containing contaminated water and pools containing clean water.

As necessary during normal plant operation, the standby FAPCS cooling and cleanup train is placed in operation to cool and clean the water in the Suppression Pool and GDCS pools. The IC/PCCS pools cooling and cleanup subsystem operates as necessary to cool and clean the water in the IC/PCCS pools during normal plant operation.

The FAPCS may be operated in the following modes for post-accident recovery:

- Spent Fuel Pool Cooling;
- Low Pressure Coolant Injection (LPCI);
- Suppression Pool Cooling (SPC);
- Drywell Spray; and
- Alternate Shutdown Cooling (ASDC).

All FAPCS lines penetrating the containment that do not have a post-accident recovery function are automatically isolated upon receipt of a containment isolation signal from Leak Detection and Isolation System (LD&IS).

The FAPCS piping provides flow paths for delivery of makeup water to IC/PCCS pools and Spent Fuel Pool from onsite or offsite post-accident water sources or the Fire Protection system as needed 72 hours after a design basis accident.

For the RTNSS function of low pressure coolant injection, a single train of the FAPCS is capable of pumping water from the suppression pool at a rate of 340 m3/hr (1500 gpm) at a differential pressure of 1.03 MPa (150 psi). The secondary injection path using the motor-driven pump in the fire pump enclosure is capable of supplying water at a rate of 90.8 m^3/hr (400 gpm) from the fire protection storage tank at a pressure of 2.61 MPa (379 psig). At a lower pressure of 1.72 MPa (250 psig), the secondary flow path is capable of supplying water at a rate of 409 m^3/hr (1800 gpm).

System Operating Modes

FAPCS is designed to operate in the modes listed in Table 9.1-2. The following paragraphs describe the major operating modes of FAPCS.

Spent Fuel Pool Cooling and Cleanup Mode – One of the FAPCS cooling and cleanup trains is continuously operated in this mode to cool and clean the water in the Spent Fuel Pool during normal plant operation and refueling outages. This mode may be initiated following an accident to cool the Spent Fuel Pool for accident recovery. During this mode of operation, water is drawn from the skimmer surge tanks, pumped through the heat exchanger and water treatment unit to be cooled and cleaned and then returned to the Spent Fuel Pool (SFP). As the SFP level rises, water spills into the weir and flows back to the skimmer surge tanks. When necessary, a portion or all of the water may bypass the water treatment unit.

Fuel and Auxiliary Pool Cooling and Cleanup Mode - During a refueling outage, one or both FAPCS cooling and cleanup trains are placed in this mode of operation to cool and clean the water in the Spent Fuel Pool and pools listed below depending on the heat load condition in these pools.

- Upper fuel transfer pool;
- Buffer pool;
- Reactor well; and
- Dryer and separator storage pool.

Once the core decay heat has dropped to a manageable level, this mode can be used as an alternate to the shutdown cooling function of the RWCU/SDC System.

During this mode of operation, water is drawn from the skimmer surge tanks, pumped through the heat exchanger and water treatment unit to be cooled and cleaned and then returned to these pools. When necessary, a portion or all of the water may bypass the water treatment unit.

IC/PCCS Pool Cooling and Cleanup Mode –The FAPCS-IC/PCCS pool cooling and cleanup subsystem is placed in this mode as necessary during normal plant operation. During this mode of operation, water is drawn via a common suction header from each IC/PCCS subcompartment.

Water is cooled and cleaned by the IC/PCCS pool cooling and cleanup subsystem and is then returned to the two expansion pools through a common line that branches and discharges deep into each pool.

GDCS Pool Cooling and Cleanup Mode – One train of the FAPCS cooling and cleanup subsystem that is not operating in Spent Fuel Pool cooling mode is placed in this mode as necessary during normal plant operation. Water is drawn from GDCS pools A and D in this mode of operation. The water is cooled and cleaned and is then returned to GDCS pool B/C. The water level in GDCS pool B/C rises and the water is cascaded and discharged at a submerged location in the adjacent GDCS pools A and D during this mode of operation.

Suppression Pool Cooling and Cleanup Mode – One of the FAPCS cooling and cleanup trains that is not operating in Spent Fuel Pool cooling mode is placed in this mode as necessary during normal plant operation. Water is drawn from the suppression pool and is cooled and cleaned and then returned to the suppression pool in this mode of operation. This mode may be manually initiated following an accident to cool the suppression pool for accident recovery. This mode may also be automatically initiated during normal operation in response to a high temperature signal from the suppression pool. The portions of the FAPCS needed for suppression pool cooling are designed to accommodate severe accident temperatures as high as 91.0°C (196°F) and severe accident wetwell pressures as high as 411 kPa (59.6 psia).

Low Pressure Coolant Injection (LPCI) Mode - This mode may be initiated following an accident after the reactor has been depressurized to provide reactor makeup water for accident recovery. In this mode the FAPCS pump takes suction from the suppression pool and pumps it into the reactor vessel via RWCU/SDC loop B and then Feedwater loop A. Alternatively, a separate motor-driven pump in the fire pump enclosure can take suction from the fire protection storage tank and pump water into the reactor vessel via a tie in with the primary LPCI flow path.

Alternate Shutdown Cooling Mode – This mode may be initiated following an accident for accident recovery. In this mode, FAPCS operates in conjunction with other systems to provide reactor shutdown cooling in the event of loss of other shutdown cooling methods. FAPCS flow path is similar to that of LPCI mode during this mode of operation. Water is drawn from the suppression pool, cooled and then discharged back to the reactor vessel via the LPCI injection flow path. The warmer water in the reactor vessel rises and then overflows into the suppression pool via two opened safety-relief valves on the main steam lines, completing a closed loop for this mode operation.

Drywell Spray Mode - This mode may be initiated following an accident for accident recovery. During this mode of operation, FAPCS draws water from the suppression pool, cools and then spays the cooled water to drywell air space to reduce the containment pressure.

9.1.3.3 Safety Evaluation

The FAPCS is a nonsafety-related system except for the portions of the system that establish flow paths necessary for

- The interface with safety-related RWCU/SDC piping;
- The supply of post-accident makeup water to the Spent Fuel Pool and IC/PCCS pools following an accident; and

- The system's containment isolation function. (Subsection 6.2.4.3.2)

The SFP is designed to dissipate the maximum fuel decay heat through heat up and boiling of the pool water. The most conservative heat load for the SFP occurs when the pool contains spent fuel from 20 years of operation plus one full core offload. The pool water performs the safety-related heat removal function stipulated in GDC 44. Upon loss of power, the FB HVAC isolates the FB as described in Subsection 9.4.2.5. Steam generated by boiling of the SFP is released to the atmosphere through a relief panel in the FB. Water inventory in the SFP is adequate to keep the fuel covered through 72 hours, thereby avoiding heat up of the fuel and the potential for fission product release. Engineered safety feature atmosphere cleanup systems and associated guidance described in RG 1.52 are not credited by the FAPCS in the ESBWR design as indicated in Subsection 15.4.1.4.1. The FB does not house any safety-related equipment, subject to flooding, as stated in Subsection 3.4.1.4.3. Sufficient reserve capacity is maintained onsite to extend the safe shutdown state from 72 hours through 7 days ensuring compliance with GDC 61. Post 72-hour inventory makeup is provided via safety-related connections to the Fire Protection System and to offsite water sources.

The FAPCS piping and components that provide the flow paths for the post-accident makeup water supply are designed to meet the requirements contained in Table 9.1-3, Item 3. No active valves are required to operate for establishing post-accident makeup water supply flow paths.

The RB and the FB provide adequate protection against natural phenomena for the safety-related components of the FAPCS as required by GDC 2 and GDC 4.

Safety-related level instrumentation is provided in the spent fuel pool, buffer pool, and IC/PCCS pools to detect a low water level that would indicate a loss of decay heat removal ability in accordance with GDC 63.

9.1.3.4 Testing and Inspection Requirements

The FAPCS is designed to permit surveillance test and in-service inspection of its safety-related components and components required to perform the post-accident recovery functions, in accordance with GDC 45 and ASME BPVC Section XI. The FAPCS is designed to permit leak rate testing of its components required to perform containment isolation function in accordance with 10 CFR 50 Appendix J.

9.1.3.5 Instrumentation and Control

System Instrumentation

Water Levels - The skimmer surge tank level is monitored by a level transmitter. The skimmer surge tank level is displayed in the MCR. In addition to level indication, this signal is used to initiate low and high water-level alarms and to operate the Condensate Storage and Transfer System makeup water control valve for the skimmer surge tank.

The IC/PCCS pool has four safety-related level transmitters in each inner expansion pool. All transmitter signals are indicated on the safety-related displays and sent through the gateways for nonsafety-related display and alarms. All signals are validated and used to control the valve in the makeup water supply line to the IC/PCCS pool. A low level signal from these transmitters is sent to the Isolation Condenser System to open the pool cross-connect valves to the equipment

storage pool. Each expansion pool also contains four nonsafety-related level transmitters that provide a backup to the safety-related transmitters.

The Spent Fuel Pool and buffer pool each have two wide-range safety-related level transmitters that transmit signals to the MCR. These signals are used for water level indication and to initiate high/low-level alarms. At a minimum, alarm set points are included at the top of the active fuel, an adequate shielding level (3.05 m [10 ft]above TAF), and an elevation just below normal water level to give operators advanced notice of a loss of inventory but with sufficient margin to allow for 72 hours of pool boiling.

The SFP and IC/PCCS pools contain backup nonsafety-related level indicators that can be operated using portable onsite power supplies to indicate when the pools have been replenished to their normal water level.

All other pools (upper transfer pool, lower fuel transfer pool, cask pool, reactor well, dryer and separator storage pool) have local, nonsafety-related, panel-mounted level transmitters to provide signals for high/low-level alarms in the MCR.

Level instruments for the suppression pool and GDCS pools are provided by other systems.

Water Temperatures – Water temperatures are monitored in the Fuel and Auxiliary pools (listed in Table 9.1-1) with temperature transmitters that send signals to the MCR for water temperature indication and high-temperature alarms. In the IC/PCCS pool, each condenser subcompartment also has temperature transmitters that send signals to the MCR for water temperature indication and high-temperature alarms. The upstream and downstream piping of the two heat exchangers in the cooling/cleanup trains have temperature transmitters that send signals to the MCR.

Flow and Pressure - Panel-mounted pressure transmitters for the pump suction and discharge pressure are provided locally. A pump trip signal is generated on low suction pressure to provide for pump protection. The pressure transmitters send signals to pressure indicators in the MCR. An orifice type flow element is located on the downstream side of each pump discharge check valve. A local panel-mounted flow transmitter sends the signals from these transmitters to flow indicators in the MCR.

System Controls

All FAPCS operating modes are manually initiated, except Suppression Pool Cooling (SPC) mode. The SPC mode is initiated either manually, or automatically upon receipt of a high suppression pool temperature signal from the Containment Monitoring System. The automatic SPC mode initiation selects the FAPCS standby train (if available) to be initiated.

Upon receipt of a containment isolation signal from the Leak Detection and Isolation System, all containment isolation valves are signaled to close, with the exception of the containment isolation valves on the suppression pool supply and return lines as well as the drywell spray line.

FAPCS cooling and cleanup train pumps are automatically tripped under the following operating conditions:

- Low water levels in skimmer surge tank;
- Low water level in Suppression Pool;

- Low water level in GDCS pools;
- High water level in GDCS pools;
- Low pump suction pressure;
- Low pump discharge flow; and
- High pump discharge flow.

The FAPCS IC/PCCS pools cooling and cleanup subsystem pump is automatically tripped on low water level in IC/PCCSpools. Water level in the skimmer surge tanks is maintained by automatic open/closure of the makeup water supply isolation valve. Water level in the IC/PCCS pools is maintained by automatic open/closure of the makeup water supply isolation valve.

9.1.4 Light Load Handling System (Related to Refueling)

The reactor and fuel servicing system associated with the handling of light loads includes the fuel storage arrangements and the necessary facilities, special tools, and equipment required to accomplish normal fueling and refueling outage tasks.

The system is integrated with other customer provided equipment and supporting services to enhance and implement the fuel handling procedure in a safe and efficient manner.

This Subsection provides the description for the ESBWR Standard Plant light load handling system and how the system satisfies the guidelines of NUREG-0612.

9.1.4.1 Design Bases

The fuel handling system is designed to provide a safe and effective means for transporting and handling fuel from the time it reaches the plant until it leaves the plant after post-irradiation cooling. Safe handling of fuel includes design considerations for maintaining occupational radiation exposures as low as reasonably achievable (ALARA).

The following subsections briefly describe the integrated fuel transfer and reactor vessel servicing system that ensures that the design bases of the fuel handling system and the requirements of RG 1.13 are satisfied.

Table 3.2-1 provides the design criteria for major fuel handling system equipment and lists the safety class, quality requirement and seismic category. Table 9.1-5 identifies applicable ASME, American National Standards Institute (ANSI), Industrial and Electrical Codes. Additional design criteria are described below and further discussed in Subsection 9.1.4.2. Relevant interlocks for the fuel handling system discussed in Subsection 9.1.4 are a partial list of the interlocks listed in Table 1 of ANSI/ANS 57.1. The interlocks listed in Table 1 of ANSI/ANS 57.1 are applicable to the ESBWR design except for interlocks associated with the New Fuel Elevator, which is not a part of the ESBWR design.

Fuel transfer from the point of receipt up to inspection, storage, and placement in the reactor core is accomplished with fuel grapples. A general purpose fuel grapple is used when fuel movement is performed by the FB crane on the FB floor prior to placement in the fuel preparation machine and transfer to the Spent Fuel Pool or buffer pool. During refueling operations, however, fuel movement is performed in the FB by the fuel handling machine and in the RB by the refueling machine telescoping grapples.

The refueling machine and the fuel handling machine are classified as nonsafety-related Seismic Category I, and are constructed in accordance with the QA requirements of 10 CFR 50, Appendix B to ensure compliance with applicable design, construction and test requirements.

Working loads of the refueling machine and fuel handling machine structures are in accordance with the American Institute of Steel and Construction (AISC) Manual of Steel Construction. All parts of the hoist systems are designed to have a safety factor of at least ten, based on the ultimate strength of the material. A redundant load path is incorporated in the fuel grapples.

Both the refueling machine and the fuel handling machine have telescoping masts with integral grapples mounted from a trolley structure. They are also equipped with auxiliary hoists and jib cranes to which other grapples are attached when required. Both have redundant safety features and indicators that ensure positive engagement with fuel bundles. The fuel masts have interlocks that provide the necessary position control boundaries during deployment and limit travel during transfer of irradiated fuel. These safety provisions prevent physical damage to the mast. A safe water shielding depth of at least 2591 mm (8.5 ft.) is always maintained over the active fuel during transit.

The spent fuel cask pit is intentionally located outside the areas normally confined to fuel movement. The cask and other heavy loads are not permitted to encroach within any part of any spent fuel, spent fuel storage pool, or safety-related structure.

Inadvertent cask movement by the main crane over the fuel storage pools is prevented by travel limit controls. See Subsection 9.1.5.

9.1.4.2 System Description

Table 9.1-6 is a listing of typical heavy-load tools and servicing equipment, used to handle light loads. The following Subsections describe the use of some of the major tools and equipment and address safety aspects of the design where applicable for light loads.

9.1.4.3 Spent Fuel Cask

Not in ESBWR Standard Plant Scope.

9.1.4.4 Overhead Bridge Cranes

Fuel Building Crane

The FB crane is classified as Seismic Category I to maintain crane structural integrity. The crane is used for lifting large heavy components and tools up to and over the FB floor. The crane is also used during plant maintenance activities to move light loads such as inspection equipment consoles on the FB floor. The crane consists of two parallel girders along which the trolley traverses across its span. It is supported on its track on the FB wall structural columns.

Among its required light load lifting tasks during fuel handling is to lift the fuel bundle from the shipping container and place it in the new fuel inspections stand. It is also used to remove the channeled fuel assembly from the fuel inspection stand and place it in the fuel preparation machine.

The FB crane is required for lifting heavy components, fuel containers, fuel assemblies during inspection, and handling the fuel shipping cask. It also provides extensive support to general

construction and operation activities in the FB. The principal design criteria for the FB crane is the same as the RB crane as contained in Subsection 9.1.5.

Reactor Building Crane

The RB crane is classified as Seismic Category I to maintain crane structural integrity. The crane is used for lifting large heavy components and tools up to and over the refueling floor. The crane is also used during plant maintenance activities to move light loads such as inspection equipment consoles on the FB floor. The crane consists of two parallel girders along which the trolley traverses across its span.

Among its required light load lifting tasks during plant operation is to handle small tools and equipment normally used during inspection and servicing activities.

During fuel transport, the main crane is also called upon to move and store pool gates. The principal design criteria for the RB crane are contained in Subsection 9.1.5.

9.1.4.5 Refueling Equipment

Refueling Machine

The refueling machine is located in the RB and is similar to a gantry style crane and is used to transport fuel and reactor components to and from buffer pool storage, the inclined fuel transfer system, and the reactor vessel. The machine spans the buffer pool on embedded tracks in the refueling floor. A telescoping mast and grapple suspended from a trolley system is used to lift and orient fuel assemblies for placement in the core or storage rack. Control of the machine is from an operator station on the refueling machine.

A position indicating system and travel limit computer is provided to locate the grapple over the vessel core and prevent collisions with pool obstacles. Two auxiliary hoists are provided for in-core servicing. The grapple in its retracted position provides sufficient water shielding of at least 2591 mm (8.5 ft.) over the active fuel during transit. The fuel grapple hoist has a redundant load path so that no single component failure results in a fuel bundle drop. Interlocks on the machine:

- Prevent hoisting a fuel assembly over the vessel with a control rod removed;
- Prevent collision with fuel pool walls or other structures;
- Limit travel of the fuel grapple;
- Interlock grapple hook engagement with hoist load and hoist up power; and
- Ensure correct sequencing of the transfer operation in the automatic or manual mode.

The refueling machine is Seismic Category I. The refueling machine is designed to withstand the SSE. A standard dynamic analysis using the appropriate response spectra is performed to demonstrate compliance to design requirements. Except for hoisting speed, the fuel hoist is designed to meet the requirements of NUREG-0554, Single Failure Proof Cranes and ASME NOG-1, Rules for Construction of Overhead and Gantry Cranes. An auxiliary hoist is designed to meet the requirements of NUREG-0612, Control of Heavy Loads at Nuclear Power Plants to allow simultaneous handling of the control blade and fuel support casting with the dual function grapple. A second auxiliary hoist is provided for handling smaller lightweight tools.

Fuel Handling Machine

The fuel handling machine is similar to a gantry style crane, and is used to transport fuel and reactor components to and from the inclined fuel transfer system and the spent fuel storage and equipment storage racks. It is also used to move spent fuel to the shipping cask. The machine spans the Spent Fuel Pool on embedded tracks in the refueling floor. A telescoping mast and grapple suspended from a trolley system is used to lift and orient fuel assemblies for placement in the cask or storage rack. Control of the machine is from an operator station on the fuel handling machine.

A position indicating system and travel limit computer is provided to locate the grapple over the spent fuel racks, IFTS, and prevent collisions with pool obstacles. An auxiliary hoist is provided for additional servicing. The grapple in its retracted position provides sufficient water shielding of at least 2591 mm (8.5 ft.) over the active fuel during transit. The fuel grapple hoist has a redundant load path so that no single component failure results in a fuel bundle drop. Interlocks on the machine:

- Prevent collision with fuel pool walls or other structures;
- Limit travel of the fuel grapple;
- Interlock grapple hook engagement with hoist load and hoist up power; and
- Ensure correct sequencing of the transfer operation in the automatic or manual mode.

The fuel handling machine is Seismic Category I. The fuel handling machine is designed to withstand the SSE. A standard dynamic analysis using the appropriate response spectra is performed to demonstrate compliance to design requirements. Except for hoisting speed, the fuel hoist is design to meet the requirements of NUREG-0554, Single Failure Proof Cranes and ASME NOG-1, Rules for Construction of Overhead and Gantry Cranes.

9.1.4.6 Fuel Servicing Equipment

Fuel Prep Machine

Two fuel preparation machines are mounted on the wall of the Spent Fuel Pool and are used to assist in the loading of new fuel into the spent fuel storage pool racks and for re-channeling spent fuel assemblies. The machines are also used with fuel inspection fixtures to provide an underwater inspection capability.

Each fuel preparation machine consists of a work platform, a frame, and a movable carriage. The frame and movable carriage are located below the normal water level in the Spent Fuel Pool, thus providing a water shield for the fuel assemblies being handled. The fuel preparation machine carriage has an up-travel-stop to prevent raising fuel above the safe water shield level. The operator places assembled new fuel in the fuel preparation machine, the carriage is lowered and the fuel removed from the fuel preparation machine using the fuel handling machine.

New Fuel Inspection Stand

The new fuel inspection stand is a vertical frame mounted in a pit that supports two fuel bundles contained in a mechanically driven inspection carriage. In the carriage the lower tie plate of each fuel bundle rests on a bearing seat and at the top each fuel assembly is supported in a separate bearing assembly. The fuel assemblies can be individually rotated about their longitudinal axis

to permit viewing all sides. The fuel channel is placed on the fuel bundle in the new fuel inspection stand.

To facilitate fuel inspection, the stand is set into an inspection pit designed to allow the carriage to be lowered and raised permitting eye level viewing by inspecting personnel on the refueling floor.

Channel Bolt Wrench

The channel bolt wrench is a manually operated device approximately 3.76 m (12 ft) in overall length. The wrench is used for removing or installing the channel fastener assembly that attaches the channel to the fuel assembly while the fuel assembly is held in the fuel preparation machine. The channel bolt wrench socket mates and captures the channel fastener's cap-screw.

Channel Handling Tool

The channel handling tool is used in conjunction with the fuel preparation machine to install and transport fuel channels.

The tool is composed of a handling bail, lock/release knob, extension shaft, angle guides, and clamp arms that engage the fuel channel. The clamps are actuated (extended or retracted) by manually rotating a lock/release knob.

The channel handling tool is suspended by its bail from a spring balancer on the channel handling boom located on the Spent Fuel Pool periphery.

General Purpose Grapple

The general purpose grapple performs many tasks and is primarily used on the auxiliary hoist of either the refueling or fuel handling machines. It is designed to fit a standard fuel bail, which is replicated on certain tooling for handling purposes. One example is handling the underwater vacuum cleaner.

The general purpose grapple, when utilizing an extension cable, is also attached to the auxiliary hook of the FB crane as the need arises for handling new fuel.

9.1.4.7 Servicing Aids

General area underwater lights are provided with a suitable reflector for illumination.

Support brackets are furnished to support the lights in the reactor vessel to allow the light to be positioned over the area being serviced independent of the platform. Local area underwater lights are small diameter lights for additional illumination. Drop lights are used for illumination where needed.

Other servicing aids that are available include the following:

- A radiation-hardened portable underwater television camera for in-vessel inspection or observation of servicing activity.
- General purpose viewing aids to prevent surface motion water and alleviate image distortion of submerged objects.
- A portable, submersible underwater vacuum cleaner to help remove crud or miscellaneous loose matter from the reactor vessel or storage pools. The required pump

and filter is also submersible for extended periods. The filter can be changed remotely and disposed of in standard containers after use for offsite burial.

9.1.4.8 Reactor Vessel Servicing Equipment

Table 3.2-1 lists the safety designation, QA requirements, and the seismic category for principal vessel service components. Lifting tools for lifting heavy loads are designed using a dual load path or designed for a safety factor of ten or better with respect to the ultimate strength of the material used. NUREG-0612, Section 5.1.6 (3) Control of Heavy Loads at Nuclear Power Plants, applies to the head lifting load path. The following subparagraphs describe the equipment contained in the table.

Reactor Vessel Service Tools

These tools are used when the reactor is shut down and the reactor vessel head is being removed or reinstalled. Tools in this group are as follows:

- RPV Stud Tensioning System and RPV Head Strongback;
- Stud handling tool;
- Seal Surface Protector;
- Stud thread protector;
- Stud elongation measuring rod;
- Dial indicator elongation measuring device; and
- Head guide cap.

Steam and DPV/IC Line Plugs

Prior to refueling when the reactor water is at the refueling level, the main steam and Depressurization Valve (DPV)/IC line nozzles must be plugged to prevent outflow of water from the reactor.

The plugs are housed on the end of a spider structure and are lowered into the vessel and aligned with their respective nozzles, actuated into position, and then their pressurized seals are activated. The plug structure is constructed of corrosion resistant materials and has a factor of safety of five or greater.

Head Support Pedestals

Head support pedestals are mounted on the refueling floor for supporting the reactor vessel head and strongback/carousel during periods of reactor servicing.

The pedestals have dowel pins that engage three evenly spaced stud holes in the head flange. The flange surface rests on replaceable wear pads made of aluminum.

When resting on the pedestals, the head flange is sufficiently high above the floor to allow access to the seal surface for inspection and O-ring replacement.

The pedestal structure is a carbon steel weldment coated with an approved paint. It has a base with bolt holes for mounting it to the concrete floor.

A seismic analysis is used to determine the input forces imposed onto the pedestals and floor anchors. The structure is designed to withstand these calculated forces and meet the requirements of AISC-325, Manual of Steel Construction: Load and Resistance Factor Design and AISC-M016, Manual of Steel Construction: Allowable Stress Design.

Dryer / Separator Strongback

The dryer / separator strongback is a lifting device used for transporting the steam dryer or the steam separators between the reactor vessel and the storage pools. The strongback structure has a hook box with two hook pins in the center for engagement with the RB crane sister hook. The strongback has a socket with a remotely operated pin on the end of each arm for engaging it to the four lift eyes on the steam dryer or shroud head.

The strongback has been designed such that one hook pin and one main beam of the cruciform is capable of carrying the total load (160-metric ton, 176 ton) and no single component failure could cause the load to drop or swing uncontrollably out of the Safety-Related level attitude. The strongback meets the requirements of NUREG-0612, Control of Heavy Loads at Nuclear Power Plants and ANSI-N14.6, Standard for Special Lifting Devices.

Head Strongback/Tensioner

The RPV head strongback stud tensioning system is an integrated piece of equipment consisting of a strongback, a multi-station rotating frame with stud tensioners, nut and washer handling tools, stud cleaning tools, a nut and washer rack, and service platform.

The strongback structure has a hook box with two hook pins in the center for engagement with the reactor service crane sister hook. Extending from the center section are arms to connect to the circular monorail. The four arms have a lift rod for engagement to the four lift lugs on the RPV head. The rotating frame is connected to the strongback arms and four additional arms equally spaced between the strongback arms. The rotating frame positions the stations of the stud tensioning and nut and washer handling tools above the stud circle of the reactor vessel and serves to suspend stud tensioners and nut and washer handling devices. The nut and washer rack is attached to the strongback and surrounds the RPV flange. The head strongback rotating frame serves the following functions:

- Lifting of Vessel Head—the strongback, when suspended from the RB crane main hook, transports the RPV head plus the rotating frame with all its attachments between the reactor vessel and storage on the pedestals.
- Tensioning of Vessel Head Closure—the strongback with rotating frame, when supported on the RPV head on the vessel, carries multiple stations of stud tensioners, nut and washer handling tools, its own weight, the strongback, storage of nuts, washers, and associated tools and equipment.
- Storage with RPV Head—the strongback with rotating frame, when stored with the RPV head holding pedestals, carries the same load as outlined in the second bullet above.
- Storage without RPV Head—during reactor operation, the strongback and rotating frame is stored on four separate pedestals.

The strongback, with its lifting components, is designed to meet NUREG-0612, Control of Heavy Loads at Nuclear Power Plants and ANSI-N14.6 Standard for Special Lifting Devices.

After completion of welding and before painting, the lifting assembly is proof load tested and all load-affected welds and lift pins are magnetic-particle inspected.

The steel structure is designed in accordance with the Manual of Steel Construction by AISC. Aluminum structures are designed in accordance with the Aluminum Construction Manual by the Aluminum Association.

The strongback is tested in accordance with American National Standard for Overhead Hoists ASME/ANSI B30.16, Paragraph 16-1.2.2.2, such that one hook pin and one main beam of the structure is capable of carrying the total load, and so that no single component failure causes the load to drop or swing uncontrollably out of the Safety-Related level attitude. The ASME Boiler and Pressure Vessel Code, Section IX (Welder Qualification) is applied to all welded structures.

9.1.4.9 In-Vessel Servicing Equipment

Instrument Strongback

The instrument strongback, when attached to the RB auxiliary hoist, is used for servicing the Local Power Range Monitor (LPRM), Startup Range Neutron Monitors (SRNM), and dry tubes when they require replacement. The strongback initially supports the dry tube into the vessel. The in-core dry tube is then decoupled from the strongback and is guided into place while being supported by the instrument handling tool.

Instrument Handling Tool

The instrument handling tool is attached to the refueling platform auxiliary hoist and is used for SRNM removing and installing PRNM fixed in-core dry tubes, as well as handling the SRNM dry tubes. Dry tubes are stored in the spent fuel storage pool.

9.1.4.10 Storage Equipment

Specially designed equipment storage racks are provided. For fuel storage racks description and fuel arrangement, refer to Subsections 9.1.1 and 9.1.2.

Defective fuel assemblies can be placed in special fuel storage containers and can be stored in the equipment storage rack; both are designed for the defective fuel. These may be used to isolate leaking or defective fuel while in the fuel pool and during shipping.

9.1.4.11 Under-Vessel Servicing Equipment

The primary functions of the under-vessel servicing equipment are as follows:

- Servicing tools for maintenance of control rod drive (CRD) motors packing and fine motion control rod drives (FMCRDs); and
- Work platform for installation during the construction phase.

The FMCRD handling equipment is designed for the removal and installation of the major components of the fine motion CRD from their housings. This equipment is used in conjunction with the equipment-handling platform. The equipment handling platform and the FMCRD handling equipment are powered electrically and pneumatically. It is designed in accordance with Occupational Safety and Health Administration (OSHA)-1910.179, and American Institute of Steel Construction, AISC standards.

The under-vessel platform provides a working surface for equipment and personnel performing work in the under vessel area. It is a polar platform capable of rotating 360°.

The under-vessel servicing equipment is used in conjunction with a rail system and various carts to transport FMCRD components from outside the containment to the under vessel area.

The in-core monitoring seal flushing equipment is designed to prevent leakage of primary coolant from in-core detector housings during detector replacement. It is designed to industrial codes and manufactured from corrosion-resistant material.

9.1.4.12 Fuel Transfer System

The ESBWR is equipped with an Inclined Fuel Transfer System (IFTS). In general the arrangement of the IFTS (refer to Figure 9.1-2) consists of a terminus at the upper end in the RB buffer pool that allows the fuel to be tilted from a vertical position to an inclined position prior to transport to the Spent Fuel Pool. There is a means to lower the transport device (i.e., a carriage), means to seal off the top end of the transfer tube, and a control system to effect transfer. It has a lower terminus in the FB storage pool, and a means to tilt the fuel into a vertical position allowing it to be removed from the transport cart. There are controls contained in local control panels to effect transfer. There is a means to seal off the upper and lower end of the tube while allowing filling and venting of the tube.

No single active failure can cause the draining of water from the upper pool in an uncontrolled manner into the spent fuel pool or other areas. There is sufficient redundancy and diversity in equipment and controls to prevent loss of load (carriage with fuel is released in an uncontrolled manner) and there are no modes of operation that allow simultaneous opening of the upper (top and fill) valves and lower (bottom and drain) valves that could cause draining of water from the upper pool in an uncontrolled manner. In order for the bottom valve to open, all of the following logic conditions must be met:

- Top valve closed;
- Fill valve closed;
- Carriage in proper position in transfer tube (below water level elevation in spent fuel pool);
- Tube drained (water level in tube at the same level as the water level in the spent fuel pool); and
- Diverse Tube Drained (low water pressure at bottom valve compared to water head when tube is open and exposed to upper pool).

In order for the drain valve to open, all of the following logic conditions must be met:

- Top valve closed;
- Fill valve closed; and
- Carriage in proper position in transfer tube (below water level elevation in spent fuel pool).

The carriage and valves may be manually operated in the event of a power failure, to allow completion of the fuel transfer process.

The IFTS has sufficient cooling such that two freshly removed fuel assemblies can remain in the IFTS until they are removed without damage to the fuel or excessive overheating.

The IFTS tube, supporting structure, fuel assemblies and/or components within the IFTS tube, can withstand an SSE without failure of the basic structure or compromising the integrity of adjacent equipment and structures. Therefore, the portion of the IFTS transfer tube assembly from where it interfaces with the upper fuel pool, the portion of the tube assembly extending through the building, the drain line connection, and the lower tube equipment (valve, support structure, and bellows) are designated as Nonsafety-Related and Seismic Category I. The winch, upper upender, and lower terminus are designated as Nonsafety-related and Seismic Category II. The remaining equipment is designated as Nonsafety-Related and Seismic Category NS.

The IFTS is anchored to the bottom of the Inclined Fuel Transfer pool in the buffer pool floor in the RB. The IFTS penetrates the RB at an angle down to the IFTS pit in the fuel storage pool in the Fuel Storage Building.

The IFTS terminates in a separate pit in the fuel storage pool. The lower terminus of the IFTS allows for thermal expansion (axial movement relative to the anchor point in the RB). The lower terminus allows for differential movement between the anchor point in the RB and the fuel pool terminus, and allows it to have rotational movement at the end of the tube relative to the anchor point in the RB. The lower end interfaces with the fuel storage pool with a bellows to seal between the transfer tube and the Spent Fuel Pool wall.

The IFTS carriage primarily handles nuclear fuel using a removable insert and control blades in a separate insert in the transfer cart. Other contaminated items may be moved in the carriage utilizing a suitable insert.

For radiation protection, personnel access into areas of high radiation or areas immediately adjacent to the IFTS is controlled. Access to any area adjacent to the transfer tube is controlled through a system of physical controls, interlocks and an annunciator. Specifically:

- Controls prevent personnel from inadvertently or unintentionally being left in those areas at the time the access doors are closed;
- During IFTS operation or shutdown, personnel are prevented from (a) either reactivating the IFTS while personnel are in a controlled maintenance area, or (b) entering a controlled IFTS maintenance area while irradiated fuel or components are in any part of the IFTS;
- Both an audible alarm and flashing red lights are provided both inside and outside any maintenance room to indicate IFTS operation;
- Radiation monitors with alarms are provided both inside and outside any maintenance area; and
- A key-lock system of key-locks in both the IFTS main operation panel and in the control room is provided to allow access to any IFTS maintenance area.

9.1.4.13 Refueling Operations

The fuel servicing system outlined in this section includes the requirements for a refueling program and the provision for tools and equipment. A general plant refueling and servicing

sequence diagram is shown on Figure 9.1-3. It depicts, in chronological order, each event based on historical BWR fleet experience.

9.1.4.14 Arrival of Fuel at Reactor Site

Upon receipt, each new fuel bundle is uncrated from its shipping crate and the fuel bundle container is moved to the floor of the FB using the FB crane. The containers must be in a vertical position before removal of the fuel, which is usually accomplished by the combined use of the FB crane auxiliary hook and the new fuel inspection stand. The fuel is inspected and channels placed over the fuel bundle. The fuel assembly is then placed in the spent storage racks.

Channeling New Fuel

Channeling of new fuel is performed on the new fuel inspection stand. With the aid of a channel handling tool, the channel is lowered over the fuel after inspection and bolted in place using a channel bolt wrench. The fuel is then transported using the FB crane auxiliary hook to the spent fuel storage pool, in preparation for eventual transfer to the RB for fueling the reactor.

9.1.4.15 Reactor Preparation for Refueling

The reactor is shut down and cooled down to reduce the reactor water temperature to under 50°C (120°F), so that open vessel work may take place.

Drywell Head Removal

The equipment storage pool gate will be installed to facilitate draining of the reactor well. Following drain down of the reactor well and the completion of wall cleaning, the drywell head is lifted by the RB crane and transported to its storage area on the refueling floor. The drywell seal protection is then installed before any other activity can proceed.

Reactor Bulkhead Servicing

Following drywell head removal, penetration openings in the reactor bulkhead are sealed to prevent leakage from well flooding. The RPV head insulation frame is removed and placed in its storage area on the refueling floor.

Vessel Head Removal

Removal of the reactor vessel head is performed with the RB crane, utilizing the RPV strongback. The RB crane and RPV strongback with the RPV head stud tensioning system is used to handle the RPV head and attachments. The strongback is designed so that no single component failure causes the load to drop or swing uncontrollably out of the horizontal attitude. The RPV strongback and stud tensioning equipment is detached from the RB crane during stud de-tensioning or tensioning operations. Following stud de-tensioning operations, the RB crane is used to lift the RPV head using the previously mounted strongback with the tensioning system, nuts, and washers.

The maximum potential drop height is at the point where the head is lifted vertically from the vessel and before moving it horizontally to the head storage pedestals.

Removal of Equipment Storage Pool and Buffer Pool Gates

In preparation for spent fuel movement out of the reactor core, the reactor well is flooded and the equipment storage pool and buffer pool gates are removed after equalization of water levels between the pools.

Dryer Removal

The dryer-separator strongback is lowered by the RB crane and attached to the dryer lifting lugs. The dryer is lifted from the reactor vessel and transported underwater to its storage location.

Nozzle Plugs Installation

Nozzle plug installation comprises plugging both the main steam and IC line nozzles. The installation is performed with the vessel flooded to just below the refueling floor level. Once installed, other outage tasks such as local leak rate testing, SRV or DPV replacement and main steam isolation valve (MSIV) maintenance activities can be initiated.

Separator Removal

Disengagement of all separator bolts from the separator/chimney flanged joint is completed and verified prior to separator removal. The separator is removed with the lifting rods attached to the flange.

Lifting of the separator is effected by the separator strongback suspended from the main crane. The lifting pins at the ends of four cruciform beams are pneumatically actuated into the lifting eyes on the separator lifting rods.

Chimney Partition Removal

To facilitate efficient movement of fuel, simplify removal/replacement of LPRMs and control rod blades, and reduce core verification time, the chimney partitions shall be removable for refueling. The partitions are lifted from the reactor vessel and transported underwater to their storage location using the partition strongback and the RB crane. Partitions are not required to be removed to perform refueling activities.

9.1.4.16 Refueling

Fuel movement during the refueling process is carried out by the refueling machine, the IFTS, and the fuel handling machine. The move by the refueling and fuel handling machines may be in a direct path as the resultant of both x and y vectors. Accuracy of position in either horizontal direction can be achieved at each RPV core position and at each fuel storage rack cell location.

Core Verification

Prior to closing the reactor vessel, verification of the core shall be performed to verify the proper location, the proper orientation, and the proper seating condition of each fuel assembly.

9.1.4.17 Vessel Closure

Following refueling, all other reactor vessel related outage activities are completed before reassembly of the reactor can begin. These may include the following:

- FMCRD maintenance and tests;

- Neutron Monitoring System servicing;
- Safety Valve, SRV and DPV replacement; and
- MSIV maintenance.

The sequence of reassembly is performed in reverse order to that of disassembly but may have some steps performed in parallel. The sequence is as follows:

- Install chimney partitions;
- Install separator;
- Remove nozzle plugs;
- Install steam dryer;
- Install equipment pool gate and buffer pool gates ;
- Drain reactor cavity;
- Install and tighten reactor vessel head;
- Install reactor vessel insulation;
- Perform inservice leak test (ISLT - Equipment is tagged out and inoperable during this test, which is a critical path item);
- Remove tags and restore valve lineups;
- Install drywell head;
- Flood reactor cavity;
- Remove equipment pool gate;
- Perform startup operations check; and
- Check final drywell closeout.

9.1.4.18 Safety Evaluation of Fuel Handling System

Fuel servicing equipment is discussed in Subsection 9.1.4.6 and refueling equipment is discussed in Subsection 9.1.4.5. In addition, the summary safety evaluation of the fuel handling system is described in the following paragraphs.

The refueling machine and fuel handling machine are designed to prevent them from becoming unstable and toppling into pools during a SSE. Interlocks, as well as limit switches, are provided to prevent accidental movement of the grapple mast into pool walls.

The grapple on both the refueling machine and fuel handling machine is hoisted to its retracted position by redundant cables inside the mast and is lowered to full extension by gravity. The retracted position is controlled by both interlocks and physical stops to prevent raising the fuel assembly above the normal stop position required for safe handling of the fuel. The operator can observe the exact grapple position over the core by a display screen at the operator console.

The results of the rack load drop analysis are contained in Reference 9.1-1.

The fuel handling system complies with the guidance of RGs 1.13, 1.29, 1.117, and ANSI/ANS 57.1, Design Requirements for Light Water Reactor Fuel Handling Systems, in order to handle fuel units and control components in a safe and reliable manner, thus meeting the requirements of General Design Criteria 2, 61, and 62 of 10 CFR 50, Appendix A. The fuel handling system and its components are located within a Seismic Category I structure that is designed to withstand the effects of extreme wind and tornado missiles.

9.1.4.19 Inspection and Testing Requirements

Inspection

The refueling and fuel handling machines have additional quality requirements that identify features that require specific QA verification of compliance to drawing requirements.

Testing

Functional tests are performed on refueling and servicing equipment in the shop prior to the shipment of most production units and generally include electrical tests, leak tests, and sequence of operations tests.

When the unit is received at the site, it is inspected to ensure that no damage has occurred during transit or storage. Prior to use and at periodic intervals, each piece of equipment is again tested to ensure that the electrical and mechanical functions are operational.

Fuel handling and vessel servicing equipment preoperational tests are described in Subsection 14.2.8.1.

9.1.4.20 Instrumentation Requirements

Refueling and Fuel Handling Machines

The refueling and fuel handling machines have a position indicator system to indicate to the operator which core fuel cell the fuel grapple is accessing. Interlocks and a monitor are provided to prevent the fuel grapple from operating in a fuel cell where the control rod is not in the proper orientation for refueling.

There is also a series of mechanically activated switches and relays that provides monitor indications on the operator's console for grapple limits, hoist and cable load conditions, and confirmation that the grapple's hook is either engaged or released.

A series of load cells is installed to provide automatic shutdown whenever threshold limits are exceeded for either the fuel grapple or the auxiliary hoist units.

Fuel Grapple

Although the fuel grapple is not safety-related, it is equipped with a mounted video camera, lighting system, and instrumentation system consisting of mechanical switches and indicator lights. This system provides the operator with a positive indication that the grapple is properly aligned and oriented and that the grappling mechanism is either extended or retracted.

9.1.5 Overhead Heavy Load Handling (OHLH) Systems

9.1.5.1 Design Bases

The objective for the OHLH system is to control the movement of heavy loads in order to ensure the safe handling of heavy loads, to reduce the potential for uncontrolled movement of heavy loads or load drops, and to limit the consequences of dropping a heavy load.

9.1.5.2 General

The equipment described in this subsection covers items considered as heavy loads that are handled under conditions that mandate critical handling compliance.

Critical load handling conditions relate to the moving of loads, the use of equipment and the performance of operations, which, by inadvertent operation or equipment malfunctions, either separately or in combination, could cause:

- A release of radioactivity;
- A criticality accident;
- The inability to cool fuel within the reactor vessel or within the Spent Fuel Pool; and
- Prevent a safe shutdown of the reactor.

This includes risk assessments of spent fuel and of storage pool levels, cooling of fuel pool water, or new fuel criticality. Critical load handling, therefore, includes all components and equipment used for moving loads weighing more than one fuel assembly with its associated handling devices.

The RB and FB cranes provide a safe and effective means for transporting heavy loads including the handling of new and spent fuel, plant equipment, service tools and fuel casks. Safe handling includes design considerations for maintaining occupational radiation exposure as low as practicable during transportation and handling.

Where applicable, the appropriate seismic category, safety classification, ASME, ANSI, industrial and electrical codes have been identified (refer to Tables 3.2-1 and 9.1-5). The designs conform to the relevant requirements of General Design Criteria 1, 2, 4, and 61 of 10 CFR 50, Appendix A by meeting the guidance of RGs 1.13, 1.29, 1.115, 1.117, ANSI/ANS 57.1, ANSI N14.6, ASME B30.9, and NUREG-0554. The OHLH system is housed within a Seismic Category I structure that is designed to withstand the effects of extreme wind and tornado missiles. The OHLH system is built in accordance with an acceptable QA program, which includes the following program elements:

- Design and procurement document control;
- Instructions, procedures, and drawings;
- Control of purchased material, equipment, and services;
- Inspection;
- Testing and test control;
- Non-conforming items;

- Corrective action; and
- Records.

The lifting capacity of each crane or hoist is designed to at least the maximum actual or anticipated weight of equipment and handling devices in a given area serviced. The hoists, cranes, or other lifting devices comply with the requirements of NRC Bulletin 96-02, NUREG-0554, ANSI N14.6, ASME/ANSI B30.9, ASME/ANSI B30.10, NUREG-0612 Subsection 5.1.1(4) or 5.1.1(5) and ASME NOG-1. Cranes and hoists are also designed to criteria and guidelines of NUREG-0612 Subsection 5.1.1(7), ASME/ANSI B30.2 and CMAA-70 specifications for electrical overhead traveling cranes, including ASME/ANSI B30.11, and ASME/ANSI B30.16 as applicable.

9.1.5.3 Applicable Design Criteria for All OHLH Equipment

All handling equipment subject to heavy loads handling criteria has ratings consistent with lifts required and the design loading will be visibly marked. Cranes/hoists or monorail hoists pass over the centers of gravity of heavy equipment that is to be lifted. In locations where a single monorail or crane handles several pieces of equipment, the routing is such that each transported piece passes clear of other parts.

Pendant control is required for the bridge, trolley, and auxiliary hoist to provide efficient handling of fuel shipping containers during receipt and also to handle fuel during new fuel inspection. The crane control system is selected considering the long lift required through the equipment hatch as well as the precise positioning requirements when handling the RPV and drywell heads, the RPV internals, and the RPV head stud tensioner assembly. The control system provides stepless regulated variable speed capability with high empty-hook speeds. Efficient handling of the drywell and RPV heads and stud tensioner assembly require that the control system provide spotting control. Because fuel shipping cask handling involves a long duration lift, low speed, and spotting control, thermal protection features are incorporated.

Heavy load equipment is also used to handle light loads and related fuel handling tasks. Therefore, much of the handling systems and related design, descriptions, operations, and service task information of Subsection 9.1.4 is applicable here. The cross-reference for the handling operations/equipment and Subsection 9.1.4 is provided in Table 9.1-6.

Transportation routing drawings are made covering the transportation route of every piece of heavy load removable equipment from its installed location to the appropriate service shop or building exit. Routes are arranged to prevent congestion and to assure safety while permitting a free flow of equipment being serviced. The frequency of transportation and usage of route are documented based on the predicted number of times usage either per year or per refueling or service outage.

9.1.5.4 System Description

9.1.5.5 Fuel Building and Reactor Building Cranes

Table 3.2-1 lists the equipment safety designation, QA requirements, and seismic category. Special lifting devices for lifting heavy loads are designed using a dual load path or designed for a safety factor of 10 or better with respect to the ultimate strength of the material used. NUREG-

0612, Control of Heavy Loads at Nuclear Power Plants, Section 5.1.6 applies to the head lifting load path.

Fuel Building Crane

The FB is a reinforced concrete structure enclosing the Spent Fuel Pool, cask handling and cleaning facility, and other equipment. The FB crane provides heavy load lifting capability for the FB floor. The main hook 150-metric ton (165-ton capacity) is used to lift new fuel shipping containers and the spent fuel shipping cask (refer to Table 9.1-7). The orderly placement and movement paths of these components by the FB crane preclude transport of these heavy loads over the Spent Fuel Pool.

The FB crane is used during refueling/servicing as well as when the plant is on-line. Minimum crane coverage includes the FB floor laydown areas, cask wash down area, and the FB equipment hatch. During normal plant operation, the crane is used to handle new fuel shipping containers and the spent fuel shipping cask. The FB crane is interlocked to prevent movement of heavy loads over the Spent Fuel Pool.

The FB crane is designed to be single failure proof in accordance with NUREG-0554 and meets ASME NOG-1.

Reactor Building Crane

The RB is a reinforced concrete structure enclosing the Reinforced Concrete Containment Vessel (RCCV), the refueling floor, the new fuel storage buffer pool, buffer pool deep pit pool for spent fuel storage, the dryer and separator, and other equipment. The RB crane provides heavy load lifting capability for the refueling floor. The main hook 160-metric ton (176-ton capacity) is used to lift the drywell head, RPV head insulation, RPV head, dryer, separator strongback, chimney partitions, and RPV head stud tensioning equipment (refer to Table 9.1-7). The orderly placement and movement paths of these components by the RB crane preclude transport of these heavy loads over the spent fuel racks in the deep pit buffer pool or over the new fuel rack.

The RB crane is used during refueling/servicing as well as when the plant is on-line. Minimum crane coverage includes the RPV for shield block removal and vessel servicing RB refueling floor lay down areas, RB equipment storage, refueling floor and the equipment hatches. The RB crane is interlocked to prevent movement of heavy loads over the fuel pools.

The RB crane is designed to be single failure proof in accordance with NUREG-0554 and meets ASME NOG-1.

9.1.5.6 Other Overhead Load Handling System

Upper Drywell Servicing Equipment

The upper drywell arrangement provides servicing access for the MSIVs, feedwater isolation valves, SRVs, DPVs, Isolation Condenser System (ICS) valves, GDCS valves, and drywell cooling coils, fans and motors. Access to the space is from the RB through either the upper drywell personnel lock or equipment hatch. Equipment is removed through the upper drywell equipment hatch. Platforms are provided for servicing the feedwater and main steam isolation valves, safety relief valves, and drywell cooling equipment with the objective of reducing maintenance time and operator exposure. Items such as MSIVs, SRVs, DPVs, and feedwater

isolation valves weigh in excess of a fuel assembly and its handling device, and therefore are considered heavy loads.

Drywell maintenance activities are only performed during a plant outage; therefore, only the GDCS piping and valves need to be protected from inadvertent load drops. This protection is provided for each GDCS component in one of two ways. Either the upper drywell servicing equipment that handles heavy loads is designed or interlocked such that movement of heavy loads above the component is restricted, or spatial separation is provided such that a single inadvertent load drop cannot result in the GDCS not meeting the Technical Specifications for Modes 5 and 6. In addition, a piping support structure and equipment platform separates and shields the GDCS piping from heavy load transport paths.

This protection is such that no credible load drop can cause (a) a release of radioactivity, (b) a criticality accident, or (c) the inability to cool fuel within the reactor vessel or Spent Fuel Pool. Therefore, the upper drywell servicing equipment is not subject to the requirements of Subsections 9.1.5.2 and 9.1.5.3.

Lower Drywell Servicing Equipment

The lower drywell arrangement provides for servicing, handling and transportation operations for FMCRDs. The lower drywell OHLH system consists of a rotating equipment service platform, chain hoists, FMCRD removal equipment, and other special purpose tools.

The rotating equipment platform provides a work surface under the reactor vessel to support the weight of personnel, tools, and equipment and to facilitate transportation moves and heavy load handling operations. The platform rotates 180° in either direction from its stored or "idle" position. The platform is designed to accommodate the maximum weight of the accumulation of tools and equipment plus a maximum sized crew. The weight of tools and equipment are specified in the interface control drawings for the equipment used in the lower drywell. Special hoists are provided in the lower drywell and RB to facilitate handling of these loads.

There are FMCRDs in the lower drywell that require servicing. There are two types of servicing operations: (1) replacement of the FMCRD drive mechanism and (2) motor and seal replacement. Separate servicing equipment is provided for each of these operations.

The FMCRD drive servicing equipment has its own mechanisms for rotating and raising FMCRD drive assemblies from a carrier on the equipment platform to their installed position. This servicing equipment interfaces with the lower drywell equipment platform and permits positioning under any one of the FMCRDs.

Separate equipment and a cart are provided for servicing FMCRD motors and seal assemblies and transporting them to the service shop located immediately outside the lower drywell equipment hatch.

There is no safety-related equipment below either component. Inadvertent load drops by the FMCRD servicing equipment cannot cause (1) a release of radioactivity, (2) a criticality accident, or (3) the inability to cool fuel within the reactor vessel or Spent Fuel Pool. Therefore, the FMCRD servicing equipment is not subject to the requirements of Subsections 9.1.5.2 and 9.1.5.3.

Main Steam Tunnel Servicing Equipment

The main steam tunnel is a reinforced concrete structure surrounding the main steam lines and feedwater lines. The safety-related valve area of the main steam tunnel is located inside the RB. Access to the main steam tunnel is during a refueling/servicing outage. At this time, MSIVs or feedwater isolation valves or feedwater check valves may be removed using permanent overhead monorail type hoists. They are transported by monorail out of the steam tunnel and placed on the floor below a ceiling removal hatch. Valves are then lifted through the ceiling hatch by the valve service shop monorail. During shutdown, all of the piping and valves are not required to operate. Any load drop can only damage the other valves or piping within the main steam tunnel. Inadvertent load drops by the main steam tunnel servicing equipment cannot cause (a) a release of radioactivity, (b) a criticality accident, or (c) the inability to cool fuel within reactor vessel or Spent Fuel Pool. Therefore, the main steam tunnel servicing equipment is not subject to the requirements of Subsections 9.1.5.2 and 9.1.5.3.

Other Servicing Equipment

Outside of the containment, the main steam tunnel, or the refueling floor there are no safety-related components of one division/train routed over any portion of a safety-related portion of another division/train at locations susceptible to heavy load drops capable of causing the loss of a safety-related component required to maintain the plant in a safe condition. Therefore, inadvertent load drops cannot cause (a) a release of radioactivity, (b) a criticality accident, (c) the inability to cool fuel within reactor vessel or Spent Fuel Pool, or (d) prevent the safe shutdown of the reactor. Therefore, the servicing equipment located outside the containment, the main steam tunnel, or the refueling floor is not subject to the requirements of Subsections 9.1.5.2 and 9.1.5.3.

9.1.5.7 Equipment Operating Procedures Maintenance and Service

Each item of equipment requiring servicing is described on an interface control diagram (ICD) delineating the space around the equipment required for servicing. This includes pull space for internal parts, access for tools, handling equipment, and alignment requirements. The ICD specifies the weights of large removable parts, shows the location of their centers of gravity, and describes installed lifting accommodations such as eyes and trunnions. An instruction manual describes maintenance procedures for each piece of equipment to be handled for servicing. Each manual contains suggestions for rigging and lifting of heavy parts, and identifies any special lifting or handling tools required.

Operating instruction and maintenance manuals are provided for reference and use by operations personnel for all major handling equipment components (e.g, cranes, hoist).

9.1.5.8 Operational Responsibilities

Critical heavy load handling in the plant includes the following key elements for the administration and implementation of heavy load handling systems:

- Heavy Load Handling System and Equipment Operating Procedures;
- Heavy Load Handling Equipment Maintenance Procedures or Manuals;
- Heavy Load Handling Equipment Inspection and Test Plans; (e.g. Nondestructive Examination [NDE], Visual);

- Heavy Load Handling Safe Load Paths and Routing Plans;
- QA Program to Monitor and Assure Implementation and Compliance of Heavy Load Handling Operations and Controls (This includes the QA program elements described in Subsection 9.1.5.2);
- Personnel Qualifications, Training and Control Program; and
- Heavy Load Handling System Guidelines regarding the use of non-metallic slings with single failure proof lifting devices.

The COL applicant will provide a description of the program governing heavy loads handling, and the schedule for implementation (COL 9.1-5-A).

9.1.5.9 Safety Evaluations

The RB and FB cranes are interlocked to prevent movement of heavy loads over fuel storage pools. The RB and FB cranes are designed to be single failure proof, in accordance with NUREG-0554, and meet ANSI N14.6. Other heavy load handling systems are designed or interlocked such that movement of heavy loads is restricted to areas away from stored fuel and some GDCS system components. The remaining GDCS components are spatially separated such that a single inadvertent load drop cannot result in the GDCS not meeting the Technical Specifications for Modes 5 and 6.

The separation (arrangement, equipment interlocks, and routing) of redundant safety-related components in relation to heavy load paths minimizes the potential to cause failure of safety-related components. Administrative procedures further minimize the potential hazard from heavy loads.

9.1.5.10 Inspection and Testing

Qualification load and performance testing, including NDE and dimensional inspection on heavy load handling equipment, is performed. Tests may include load capacity, safety overloads, life cycle, sequence of operations, and functional performance.

When load handling equipment is received at the site, it is inspected to ensure no damage has occurred during transit or storage. Prior to use and at periodic intervals, each piece of equipment is tested again to ensure that the electrical or mechanical functions are operational including visual inspection and, if required, NDE inspection.

Crane inspections and testing comply with ASME/ANSI B30.2.

9.1.5.11 Instrumentation Requirements

The majority of the heavy load handling equipment is manually operated and controlled by the operator based on visual observations. This type of operation does not necessitate the need for a dynamic instrumentation system.

Load cells may be installed to provide automatic shutdown whenever threshold limits are exceeded for critical load handling operations to prevent overloading.

9.1.6 COL Information

9.1-1-H Dynamic and Impact Analyses of Fuel Storage Racks (Deleted)

9.1-2-H Fuel Storage Racks Criticality Analysis (Deleted)

9.1-3-H Fuel Racks Load Drop Analysis (Deleted)

9.1-4-A Fuel Handing Operations

The COL applicant will describe the programs that address the following (Subsection 9.1.1.7):

- Criticality safety of fuel handling operations;
- Fuel handling procedures;
- Maintenance manuals and procedures for equipment used to move fuel;
- Equipment inspection and test plans for equipment used to move fuel;
- Personnel qualifications, training, and control programs for fuel handling personnel; and
- QA programs to monitor, implement, and assure compliance to fuel handling operations;

9.1-5-A Handling of Heavy Loads

The COL applicant will provide a description of the program governing heavy loads handling, and the schedule for implementation, that addresses the following:

- Heavy loads and heavy load handling equipment outside the scope of loads described in the referenced certified design, and the associated heavy load attributes (load weight and typical load path);
- Requirements for heavy load handling safe load paths and routing plans including descriptions of automatic and manual interlocks not described in the referenced certified design and safety devices and procedures to assure safe load path compliance;
- Summary description of requirements to develop heavy load handling equipment maintenance manuals and procedures;
- Requirements for heavy load handling equipment inspection and test plans;
- Requirements for heavy load personnel qualifications, training, and control programs;
- QA program requirements to monitor, implement, and ensure compliance with the heavy load handling program. (Subsection 9.1.5.8) (This includes the QA program elements described in Subsection 9.1.5.2); and
- Issues described in Regulatory Issue Summary (RIS) 2005-25, Supplement 1, Clarification of NRC Guidelines for Control of Heavy Loads, related to the use of non-metallic slings with single failure proof lifting devices. (Subsection 9.1.5.8)

9.1.7 References

9.1-1 GE Hitachi Nuclear Energy, "Dynamic, Load-Drop, and Thermal-Hydraulic Analyses for ESBWR Fuel Racks", NEDC-33373P, Class II (Proprietary), and NEDO-33373, Class I (Non-proprietary).

9.1-2 GE Hitachi Nuclear Energy, "Criticality Analysis for ESBWR Fuel Racks", NEDC-33374P, Class II (Proprietary), and NEDO-33374, Class I (Non-proprietary).

Table 9.1-1

Pools Served by FAPCS and IC/PCCS

Pools Served by FAPCS Cooling and Cleanup	**Location**
Fuel Pools • Spent Fuel Pool • Lower Fuel Transfer Pool • Cask Pool	Fuel Building
Auxiliary Pools • Equipment Storage Pool • Reactor Well • Buffer Pool • Upper Fuel Transfer Pool	Reactor Building
GDCS Pools • GDCS A pool • GDCS B/C pool • GDCS D pool	Containment
Suppression Pool	Containment
Pools Served by IC/PCCS Pool Cooling and Cleanup Subsystem	
IC/PCCS Pools • IC Pools • PCCS Pools • Expansion (Outer) Pools	Reactor Building

Table 9.1-2

FAPCS Operating Modes

Mode	Description	Plant Condition
1	Spent Fuel Pool Cooling and Cleanup	a. Normal* b. Refueling c. Post accident**
2	Fuel and Auxiliary Pool Cooling and Cleanup	Refueling
3	IC/PCCS Pool Cooling and Cleanup	Normal*
4	GDCS Pool Cooling and Cleanup	Normal*
5	Suppression Pool Cooling and Cleanup	a. Normal* b. Post accident**
6	LPCI	Post accident**
7	Drywell Spray	Post accident**
8	IC/PCCS pool automatic makeup	Normal*
9	Reactor Well fill up	Refueling
10	Reactor Well Draining	Refueling
11	Overboarding of Suppression Pool Water	Refueling
12	Post-LOCA fill-up of Spent Fuel Pool and IC/PCCS pools	Post accident**
13	Alternate Shutdown Cooling	Post accident**

* Normal plant operation including reactor power operation and plant shutdown.

** Post accident recovery period starting at 72 hours after the accident. Cleanup function is not required during this period.

Table 9.1-3

FAPCS Safety Classification, Quality Group and Seismic Category

Component	Safety Class	Quality Requirement	Seismic Category
1. Piping between inboard and outboard containment isolation valves for Suppression pool return line GDCS pool suction line GDCS pool return line Drywell Spray discharge line	2	B	I
2. Piping between inboard manual valve and second outboard containment isolation valve on suppression pool suction line, as well as the LPCI piping between the RWCU/SDC interface and the second isolation valve	2	B	I
3. Piping and components providing dedicated post-accident makeup water to the IC/PCCS pools and Spent Fuel Pool from piping connections located at grade level in the reactor yard and Fire Protection System	3	C	I
4. Interconnecting pipes between GDCS pools	3	C	I
5. Piping and components outside containment needed for SFP Cooling, SPC, LPCI and drywell spray modes of operation including skimmer lines and all components of the cooling and cleanup trains.	N	B	II
6. Suppression pool suction line inside containment between inboard manual valve and its termination point (including suction strainers)	N	B	I
7. Piping inside containment between inboard containment isolation valves and its termination point for: Suppression pool return line Drywell spray discharge line	N	C	I

Table 9.1-3

FAPCS Safety Classification, Quality Group and Seismic Category (Continued)

8. Piping inside containment between inboard containment isolation valves and their termination points inside containment for: GDCS pool suction line GDCS pool return line	N	D	II
9. IC/PCCS Pool cooling and cleanup subsystem piping	N	D	II
10. Auxiliary pools skimmer lines and auxiliary pools return lines between the isolation valves and terminating points, and all piping and components associated with pool liner leak detection	N	D	NS
11. Instrument Sensing lines for the following parameters: IC/PCCS pool water level Spent Fuel Pool water level Buffer pool water level	3	C	I
12. Electrical Modules and cables with safety-related function (containment isolation, LPCI isolation)	3	NA	I
13. Electrical Modules and cables with nonsafety-related function	N	NA	II
14. Control and Instrumentation required for safety-related functions.	Q	NA	I
15. Control and Instrumentation required for nonsafety-related functions	N	NA	II

Table 9.1-4

(Deleted)

Table 9.1-5

Reference Codes and Standards

Number	Title	Device
ANSI-N14.6	Special Lifting Devices for Shipping Containers Weighing 10000 Pounds (4500 kg) or More	Applicable to any item carrying a heavy load such as the RB and FB overhead cranes and the refueling and fuel handling machine
ASME/ANSI B30.9	Slings	Applicable to the RPV dryer strongback slings.
ASME/ANSI B30.10	Hooks	Applicable to the RB and FB overhead cranes.
ASME/ANSI B30.2	Overhead and Gantry Cranes (Top Running Bridge, Single or Multiple Girder, Top Running Trolley Hoist)	Applicable to the RB and FB overhead cranes.
ASME/ANSI B30.16	Overhead Hoists (Underhung)	Applicable to the RB and FB overhead cranes.
ASME/ANSI B30.11	Monorail and Underhung Cranes	Applicable to the RB and FB overhead cranes.
ANSI/ANS 57.1	Design Requirements for Light Water Reactor Fuel Handling Systems	Applicable to the RB and FB overhead cranes and the refueling and fuel handling machine equipment and tools used to handle fuel and fuel components.
ASME NOG-1	Rules for Construction of Overhead and Gantry Cranes (Top Running Bridge, Multiple Girder)	Applicable to the RB and FB overhead cranes. Applicable to the hoist (mast and fuel grapple) on the refueling and fuel handling machines.
CMAA70	Specifications for Electric Overhead Traveling Cranes	Applicable to the RB and FB overhead cranes and the refueling and fuel handling machines.
NUREG-0612	Control of Heavy Loads at Nuclear Power Plants	Applicable to the RB and FB overhead cranes. A portion of the NUREG is applicable to the RPV strongback or dryer strongback interface with the lifting device. Applicable to the hoist (mast and fuel grapple) on the refueling and fuel handling machines. Applicable to the auxiliary hoist on the refueling machine.
NUREG-0554	Single Failure Proof Cranes for Nuclear Power Plants	Applicable to the RB and FB overhead cranes. Applicable to the hoist (mast and fuel grapple) on the refueling and fuel handling machines.

Table 9.1-6

Heavy Load Equipment Used to Handle Light Loads and Related Refueling Handling Tasks

Handling Operations/Equipment	Applicable Light Load Handling Subsection
Reactor Building Crane	9.1.4.4
Fuel Building Crane	9.1.4.4
Reactor Vessel Servicing Equipment	9.1.4.8
Steam and DPV/IC Line Plugs	9.1.4.8
Dryer/Separator Strongback	9.1.4.8
Chimney Partition Strongback	
Head Strongback/Carousel	
In Vessel Servicing Equipment	9.1.4.9
Refueling Operations/Equipment	9.1.4.5
Refueling Machine	9.1.4.5
Fuel Handling Service Tasks	9.1.4.15
Reactor Shutdown Handling Tasks	9.1.4.15
Drywell Head Removal	9.1.4.15
Reactor Well Servicing	9.1.4.15
Reactor Vessel Head Removal	9.1.4.15
Dryer and Separator Removal	9.1.4.15
Fuel Handling Machine	9.1.4.5
Vessel Closure	9.1.4.17

Table 9.1-7

Summary of Heavy Load Operations

Hardware Handling Tasks	Handling System	Handling Equipment	Location
RPV OPENING/CLOSING OPERATIONS			
Pool Seal Gates removal, reinstallation and storage	RB	RB Crane Main or Auxiliary Hoist, Slings and Strongbacks	RF Equipment Pool Buffer Pool
Drywell Head removal, storage and reinstallation	RB	RB Crane Main Hoist, Drywell Head Strongbacks	RF R/W
Reactor Vessel Head Insulation removal, storage and reinstallation	RB	RB Crane Main Hoist Lifting Sling	RF R/W
Reactor Vessel Head removal, storage and reinstallation, includes handling stud tensioners studs, nuts, Automatic Tensioning Machine	RB	RB Crane Main Hoist Auxiliary Hoist Automatic Tensioning Machine RPV Head support Pedestal	RF R/W
Steam Dryer/Separator removal, storage and reinstallation. Includes unbolting Separator/Chimney flange joint bolts from Refueling Machine	RB	RB Crane Main Hoist Dryer/Separator Strongback	R/W Equipment Pool RV
Chimney Partition removal storage and reinstallation	RB	RB Crane Main Hoist Chimney Partition Strongback	RF R/W
Steam & DPV Nozzle Plugs Remote Machine installation and removal	RB	RB Crane Auxiliary Hoist	RF RV

Table 9.1-7
Summary of Heavy Load Operations (Continued)

Hardware Handling Tasks	Handling System	Handling Equipment	Location
REFUELING OPERATIONS:			
New Fuel:			
Receive at Grade and receipt inspect. Lift to FB floor after removing outer container.	FB	FB Crane Auxiliary Hoist	FB
Remove from inner container and move fuel to new fuel inspection stand. Handle channel and place channel on new fuel bundle.	FB	FB Crane Auxiliary Hoist	FB
Fuel Cask:			
Receive, inspect, lift to FB floor. Lower into cask pit. Remove closure head. Move spent fuel to cask pit. Replace closure head and wash cask. Move cask to G/F for shipment.	FB	FB Crane Main Hoist Auxiliary Hoist Fuel Handling Machine Auxiliary Hoists Fuel Grapple	FB

Table 9.1-7
Summary of Heavy Load Operations (Continued)

Hardware Handling Tasks	Handling System	Handling Equipment	Location
REACTOR SERVICE OPERATIONS:			
Control Rod Blades replacement including moving adjacent fuel bundles, and blade guide removal and installation.	RB	Refueling Machine Auxiliary Hoists Fuel Grapple Control Rod Grapple	RV RV
Fuel Support and Guide Tube (FSGT) (Non-routine) removal and replacement.	RB	Refueling Platform Auxiliary Hoists	RV
UPPER DRYWELL AND MAIN STEAM TUNNEL SERVICING			
MSIVs, DPVs, and SRVs Servicing: SRV removal, installation, and transportation for repair and calibrations from installed location to RCCV entrance and up to special service room area and return.	UDW	Monorail for servicing MSIVs, DPVs and SRVs Monorail Hoist Transportation Cart Hatchway Hoist Wall Mount Steam Tunnel Crane Hoist Transportation Cart Hatchway Hoist Wall Mount	UDW

Table 9.1-8

Design Parameters for FAPCS System Components

Main Pumps	
Number of Pumps	2
Pump Type	Centrifugal
Drive Unit	Constant Speed Induction Motor
Flow Rate	567.8 m^3/hr (2500 gpm)
NPSH Available	13.0 m (42.65 ft)
Heat Exchangers	
Number of units	2
Heat Removal Capacity	8.3 MW (at rated conditions)
Seismic	Category II design and analysis
Heat Exchanger Type	Shell & Tube or Plate
Maximum Pressure	2.0 MPaG (290 psig)
Performance Data	
(1) Flow (hot side)	567.8 m^3/hr (2500 gpm)
(2) Flow (cold side)	567.8 m^3/hr (2500 gpm)
(3) Rated Inlet Temp (tube side)	48.9ºC (120ºF)
(4) Maximum Inlet Temp (shell side)	35.0ºC (95ºF)

LEGEND:

LPCI	LOW PRESSURE COOLANT INJECTION
GDCS	GRAVITY-DRIVEN COOLING SYSTEM
RCCWS	REACTOR COMPONENT COOLING WATER SYSTEM
IC	ISOLATION CONDENSER
PCCS	PASSIVE CONTAINMENT COOLINGSYSTEM
MWS	MAKE UP WATER SYSTEM
CS&TS	CONDENSATE STORAGE AND TRANSFER SYSTEM
RWCU/SDC	REACTOR WATER CLEANUP/SHUTDOWN COOLING
RPV	REACTOR PRESSURE VESSEL
S/P	SUPPRESSION POOL
FPS	FIRE PROTECTION SYSTEM
LWS	LIQUID WASTE SYSTEM
B, C, D	QUALITY GROUP B, C, D
I, II	SEISMIC CATEGORY I, II
NS	NON-SEISMIC

M MOTOR OPERATOR
N NITROGEN OPERATOR
A AIR OPERATOR
F FLOW ELEMENT

NOTES:

1. ALL EQUIPMENT AND INSTRUMENT IDENTIFICATIONS ARE PREFIXED BY G21 UNLESS OTHERWISE NOTED.
2. UNLESS OTHERWISE NOTED, ALL VALVES AND EQUIPMENT OF THE FAPCS ARE NON-1E CLASSIFIED, EXCEPT FOR CONTAINMENT ISOLATION VALVES WHICH ARE CLASSIFIED AS 1E.
3. OUTBOARD CONTAINMENT ISOLATION VALVES SHALL BE LOCATED AS CLOSE AS PRACTICAL TO THE CONTAINMENT PENETRATION.
4. ALL MOTOR OPERATED VALVES ARE AC UNLESS OTHERWISE NOTED.
5. PIPING HIGH POINT VENTS AND LOW POINT DRAINS ARE TO BE ADDED AT ALL SUCH HIGH OR LOW POINTS NOT SERVED BY EQUIPMENT VENTS AND DRAINS.
6. VACUUM BREAKERS TO BE 1" NOMINAL SIZE AT LOCATIONS TO BE DETERMINED DURING DETAILED ENG. PHASE.
7. ANTI SIPHONING PROVISION SHALL BE LOCATED AT THE DRAW DOWN WATER LEVEL OF THE SUPPRESSION POOL.
8. PIPING ARRANGEMENT SHALL BE SUCH THAT ADEQUATE MIXING OF THE S/P WATER TAKES PLACE. INTAKE STRAINERS AND OUTLET DIFFUSERS SHALL BE LOCATED 180 DEGREES APART. INTAKE STRAINERS SHALL BE CONSTRUCTED IN SUCH A WAY THAT INTAKE FROM THE UPPER REGION AS WELL AS THE LOWER REGION OF THE S/P WATER TAKES PLACE.
9. THE CONTAINMENT PENETRATION OF THE GDCS SUCTION LINE SHALL BE LOCATED BELOW THE SUCTION INLET FROM THE POOL.

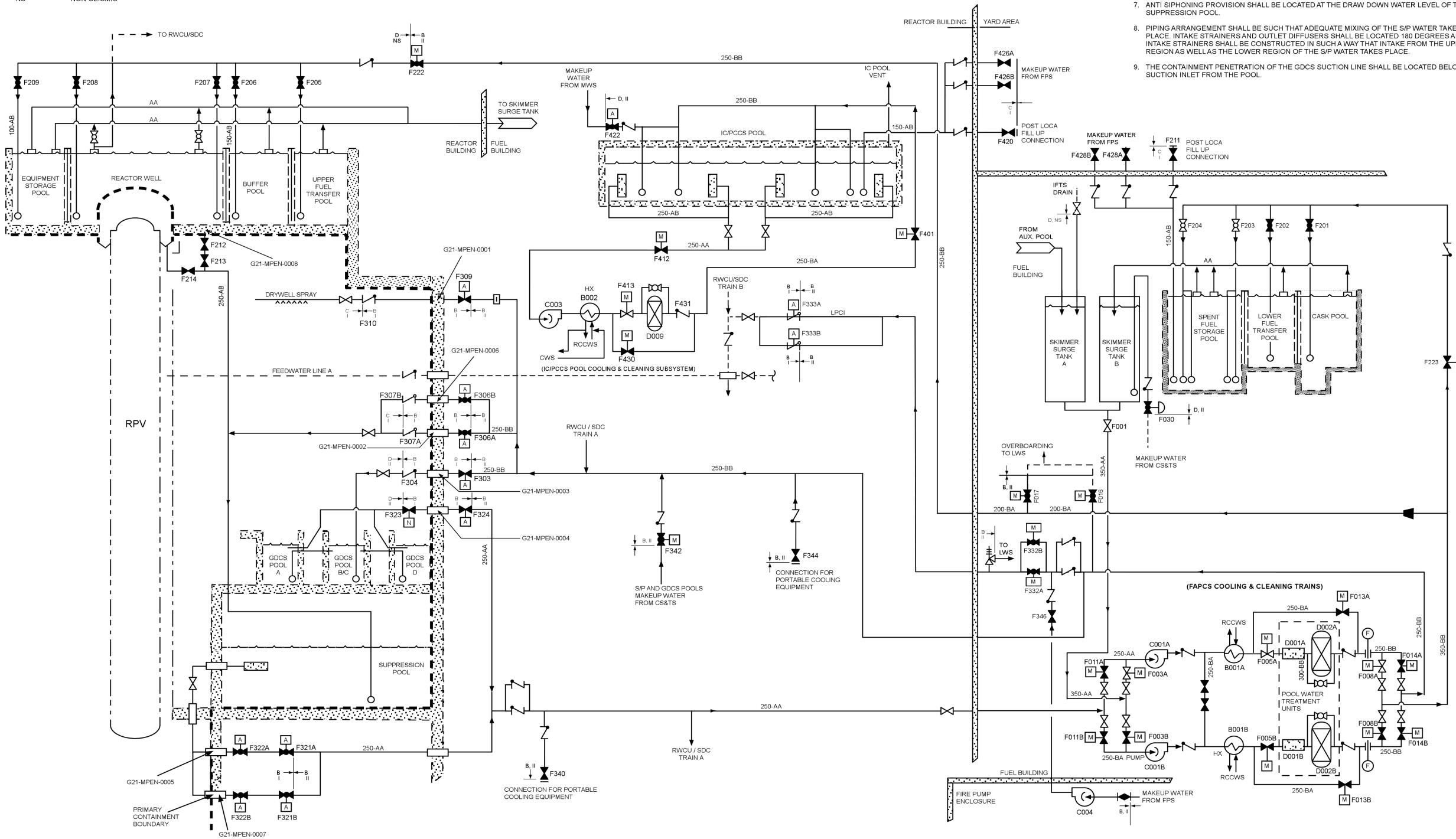

Figure 9.1-1. FAPCS Schematic Diagram

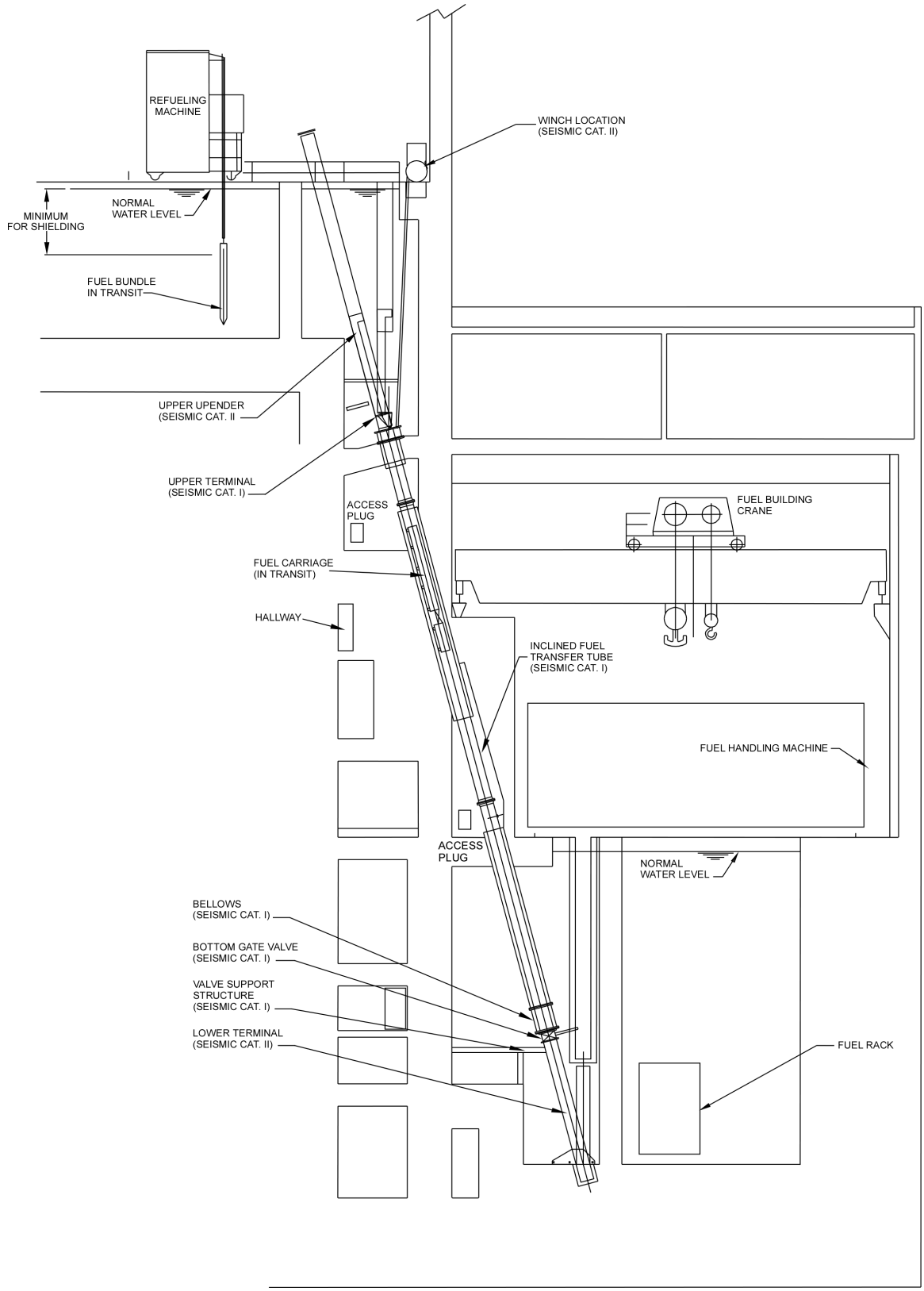

Figure 9.1-2. Inclined Fuel Transfer System

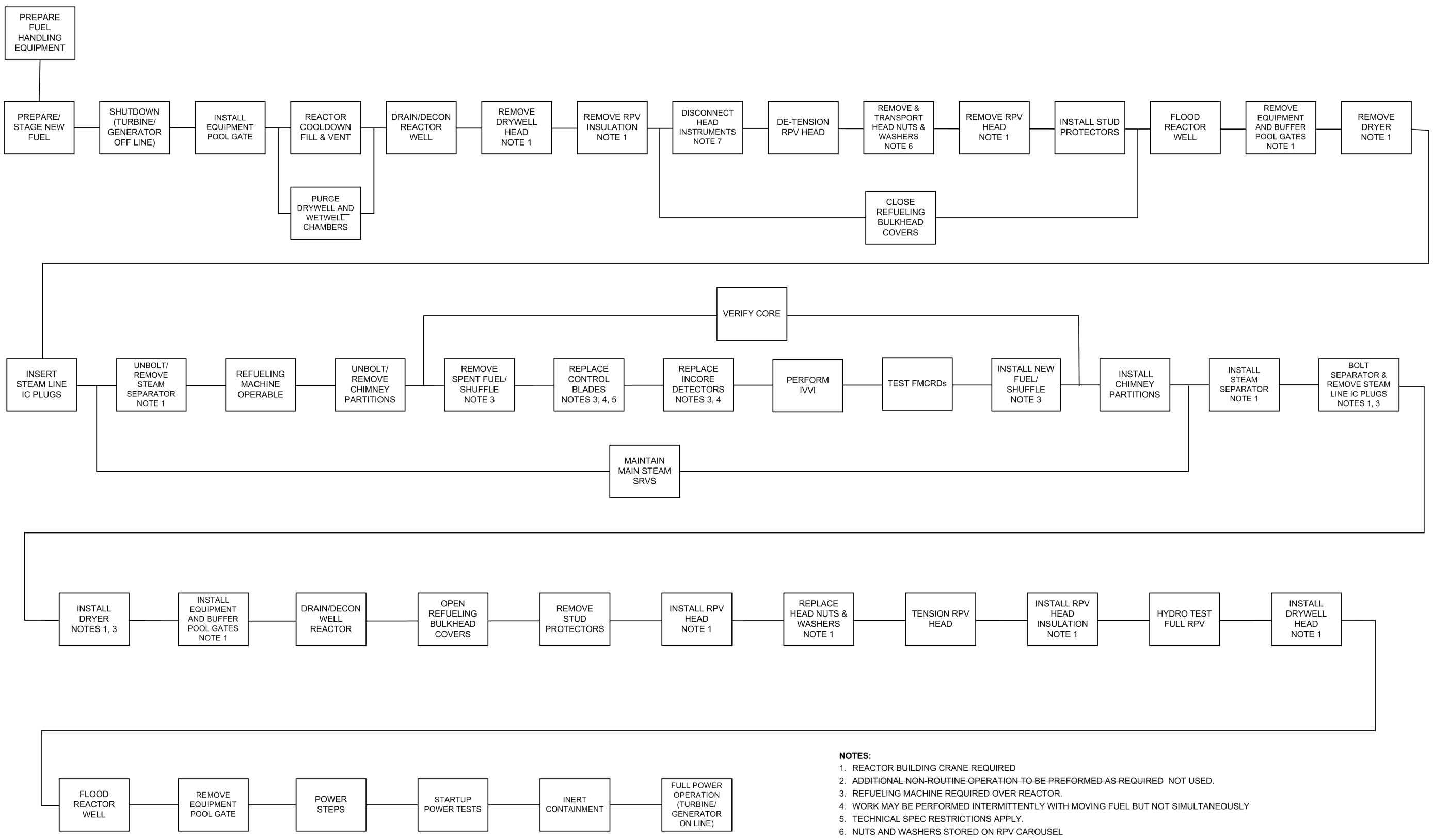

NOTES:

1. REACTOR BUILDING CRANE REQUIRED
2. ~~ADDITIONAL NON-ROUTINE OPERATION TO BE PREFORMED AS REQUIRED~~ NOT USED.
3. REFUELING MACHINE REQUIRED OVER REACTOR.
4. WORK MAY BE PERFORMED INTERMITTENTLY WITH MOVING FUEL BUT NOT SIMULTANEOUSLY
5. TECHNICAL SPEC RESTRICTIONS APPLY.
6. NUTS AND WASHERS STORED ON RPV CAROUSEL
7. INSTRUMENTATION REQUIRED FOR FIRST CYCLE ONLY.

Figure 9.1-3. Refueling Sequence

9.2 WATER SYSTEMS

9.2.1 Plant Service Water System

9.2.1.1 Design Bases

Safety Design Bases

The Plant Service Water System (PSWS) does not perform any safety-related function. There is no interface with any safety-related component.

The PSWS has RTNSS functions as described in Appendix 19A, which provides the level of oversight and additional requirements to meet the RTNSS functions. Performance of RTNSS functions are assured by applying the defense-in-depth principles of redundancy and physical separation to ensure adequate reliability and availability as described in Subsection 19A.8.3.

The PSWS meets the requirements of GDC 2 as it pertains to Position C.2 of RG 1.29. The PSWS also meets the intent of GDC 2 as it pertains to Position C.1 of RG 1.29.

The PSWS meets the intent of the acceptance criteria of GDC 4 for normal operation, maintenance, and testing. The PSWS meets the intent of the acceptance criteria of GDC 4 with respect to dynamic effects associated with water hammer. The PSWS is vented at components and high points vents and operation and maintenance procedures are used to assure sufficient measures are taken to avoid water hammer. The PSWS also meets the intent of the acceptance criteria of GDC 4 for other dynamic effects, including the effects of missiles, jet impingement, pipe whipping, and discharging fluids, as clarified by the following design considerations:

- Pipe routing;
- Piping design considerations, such as material selection, pipe size and schedule;
- Protective barriers as necessary; and
- Appropriate supports and restraints.

The PSWS meets GDC 5 for shared systems and components important to safety. The PSWS Standard Plant design does not share any structure, system, or component (SSC) with any other unit.

Although the PSWS is a nonsafety-related system, it meets the intent of certain acceptance criteria of GDCs 44, 45 and 46, as clarified by the following design considerations:

- Capability of transferring heat loads from SSCs to a heat sink under normal and accident conditions;
- Component redundancy so the system remains functional assuming a single active failure coincident with a loss of offsite power;
- Capability to isolate components or piping so system function is not compromised; and
- Design provisions to permit inspection and operational testing of components and equipment.

Power Generation Design Bases

The PSWS provides 100% of the required cooling to the Reactor Component Cooling Water System (RCCWS) and Turbine Component Cooling Water System (TCCWS) heat exchangers.

The PSWS is designed so that neither a single active nor single passive component failure results in a complete loss of nuclear island cooling and/or plant dependence on any safety-related system. This is achieved by redundant components, automatic valves and piping cross-connects for increased reliability.

The PSWS is designed for ease of restoration of its function after a component failure without plant operating mode or power level change.

The PSWS is designed to operate during a Loss of Preferred Power (LOPP).

The PSWS is designed for remote operation from the MCR.

The RCCWS utilizes plate type heat exchangers to mitigate cross-contamination of either RCCWS or PSWS.

9.2.1.2 System Description

Summary Description

The PSWS rejects heat from nonsafety-related RCCWS and TCCWS heat exchangers to the environment. The source of cooling water to the PSWS is from either the normal power heat sink (NPHS) or the auxiliary heat sink (AHS), while the heat removed is rejected to either the NPHS or to the AHS. The portions of PSWS that are not a part of the ESBWR Standard Plant consist of the heat rejection facilities (NPHS and AHS), which are dependent on actual site conditions. The conceptual design utilizes natural draft cooling towers for the NPHS and mechanical draft cooling towers for the AHS with a crosstie line to permit routing of the plant service water to either heat sink.

A simplified diagram of the PSWS is shown in Figure 9.2-1.

The above conceptual design information for the heat rejection facilities of the PSWS will be replaced with site-specific design information.

Detailed System Description

The PSWS consists of two independent and 100% redundant trains that continuously circulate water through the RCCWS and TCCWS heat exchangers.

Each PSWS train consists of two 50% capacity vertical pumps taking suction in parallel from the plant service water basin. Discharge is through a check valve, a self-cleaning strainer, and a motorized discharge valve at each pump to a common header. Each common header supplies plant service water to each RCCWS and TCCWS heat exchanger train arranged in parallel. The plant service water is returned via a common header to the mechanical draft cooling towers (AHS) in each train or to the natural draft cooling towers (NPHS). Remote operated isolation valves and a crosstie line permit routing of the plant service water to either heat sink. The RCCWS and TCCWS heat exchangers are provided with remotely operated isolation valves. Flow control valves are provided at each heat exchanger outlet.

The PSWS pumps are located at the plant service water basin. Each pump is sized for 50% of the train flow requirement for normal operation. The pumps are low speed, vertical wet–pit designs with allowance for increase in system friction loss and impeller wear. The design of the heat rejection facilities and PSWS pumps have sufficient available net positive suction head (NPSH) under worst case conditions. Basin water level is monitored to ensure sufficient NPSH at design flow is provided to the PSWS pumps.

The pumps in each train are powered from redundant electrical buses. During a LOPP, the pumps are powered from the two nonsafety-related standby diesel-generators.

Valves are provided with hard seats to withstand erosion where required based on site water quality analysis (COL 9.2.1-1-A). The valves are arranged for ease of maintenance, repair, and in-service inspection. During a LOPP, the motor-operated valves are powered from the two, nonsafety-related standby diesel-generators.

The AHS provided for each PSWS train is a separate, multi-celled, 100% capacity mechanical draft cooling tower, with the fans in the tower from each train supplied by one of the two redundant electrical buses. During a LOPP, the fans are powered from the two, nonsafety-related standby diesel-generators. Each tower cell has an adjustable-speed, reversible motor fan unit that can be controlled for cold weather conditions to prevent freezing in the basin. A full flow bypass is provided to return water directly to the PSWS basin to allow ease of cold weather startup. Mechanical and electrical isolation allows maintenance on one tower, including complete disassembly, during full power operation. The Station Water System provides makeup for blowdown, drift, and evaporation losses from the basin. Refer to Subsection 9.2.10 for Station Water System discussion. The COL Applicant will determine material selection, including the need for valve hard seat material, and provide provisions to preclude long-term corrosion and fouling of the PSWS based on site water quality analysis (COL 9.2.1-1-A).

In the event of a LOPP, the PSWS supports the RCCWS in bringing the plant to cold shutdown condition in 36 hours assuming the most limiting single active or a passive component failure.

The ESBWR Standard Plant PSWS design heat loads are shown in Table 9.2-1. The PSWS component design characteristics are shown in Table 9.2-2.

The PSWS design detects and alarms in the MCR any potential gross leakage and permits the isolation of any such leak in a sufficiently short period of time to preclude extensive plant damage.

Means are provided to detect leakage into the PSWS from the RCCWS, which may contain low levels of radioactivity.

The potential for water hammer is mitigated through the use of various system design and layout features, such as automatic air release/vacuum valves installed at high points in system piping and at the pump discharge, proper valve actuation times to minimize water hammer, procedural requirements ensuring proper line filling prior to system operation and after maintenance operations, and the use of a check valve at each pump discharge to prevent backflow into the pump.

The above conceptual design information for the heat rejection facilities of the PSWS will be replaced with site-specific design information in the Combined License Application (COLA) Final Safety Analysis Report (FSAR).

Operation

The PSWS operates during startup, normal power operation, hot standby, cooldown, shutdown/refueling, and LOPP.

During normal power operation, the cross-tie valves in the PSWS pump discharge header are open, allowing two of the four 50% capacity PSWS pumps to supply water to both PSWS trains. Heat removed from the RCCWS and TCCWS is rejected to the normal power heat sink or to the auxiliary heat sink.

Operation of any two of the four PSWS pumps is sufficient for the design heat load removal in any normal operating mode. During normal and LOPP cooldown mode three pumps can be used for operational convenience to bring the plant to cold shutdown condition in 24 hours.

During a LOPP, the running PSWS pumps restart automatically using power supplied by the nonsafety-related standby diesel-generators.

9.2.1.3 Safety Evaluation

The PSWS has no safety-related function. Failure of the system does not compromise any safety-related system or component, nor does it prevent safe shutdown of the plant.

9.2.1.4 Testing and Inspection Requirements

Initial testing of the system includes performance testing of the heat rejection facilities and pumps for conformance with design heat loads, water flows, and heat transfer capabilities. An integrity test is performed on the system upon completion of construction. This initial testing of the system includes demonstrating that PSWS supplies adequate cooling water flow rate to the RCCWS and TCCWS heat exchangers.

Additional testing details of PSWS are described in Subsection 14.2.8.1.51.

Provision is made for periodic inspection of components to ensure the capability and integrity of the system. The pumps are tested in accordance with standards of the Hydraulic Institute ANSI/HI 2.6 (M108). Testing is performed to simulate the various modes of operation to the greatest extent practical.

Motor-operated valves are tested and inspected to ensure plant availability.

9.2.1.5 Instrumentation Requirements

The PSWS is operated and monitored from the MCR. The PSWS can also be operated from the remote shutdown panels.

With one PSWS pump operating, the respective standby pump starts automatically on detection of low system pressure signal in that train, loss of electric power to the operating pump, or operating pump trip signal.

Starting a PSWS pump automatically opens a flow path through the RCCWS and TCCWS heat exchangers. The PSWS pump will trip if the pump discharge valve fails to open ensuring minimum flow conditions are maintained.

The pump discharge strainers have remote manual override features for their automatic cleaning cycle. Pressure drop across the strainer is indicated in the MCR and a high-pressure drop is annunciated in the control room.

Supply and return header temperatures and supply header pressure are indicated in the MCR.

Each TCCWS and RCCWS heat exchanger has a pressure differential transmitter to indicate the pressure drop across the heat exchangers. In addition, a discharge flow transmitter is placed after each RCCWS and TCCWS heat exchanger. Flow elements and transmitters in the PSWS provide monitoring of system flow in the MCR and can be used to assist in leak detection.

This PSWS instrumentation conforms with GDC 13. Refer to Subsection 3.1.2.4 for a general discussion of the GDC.

9.2.1.6 COL Information

9.2.1-1-A Material Selection

The COL Applicant will determine material selection, including the need for valve hard seat material, and provide provisions to preclude long-term corrosion and fouling of the PSWS based on site water quality analysis (Subsection 9.2.1.2).

9.2.1.7 References

9.2.1-1 RG 1.29 “Seismic Design Classification”

9.2.1-2 ANSI/HI 2.6 (M108) American National Standard for Vertical Pump Tests

9.2.2 Reactor Component Cooling Water System

9.2.2.1 Design Bases

Safety Design Bases

The RCCWS does not perform any safety-related function. Therefore, the RCCWS has no safety design basis.

The RCCWS has RTNSS functions as described in Appendix 19A, which provides the level of oversight and additional requirements to meet the RTNSS functions. Performance of RTNSS functions is assured by applying the defense-in-depth principles of redundancy and physical separation to ensure adequate reliability and availability as described in Subsection 19A.8.3.

The RCCWS meets the requirements of GDC 2 as it pertains to Position C.2 of Reg. Guide 1.29. The RCCWS also meets the intent of GDC 2 as it pertains to Position C.1 of Reg. Guide 1.29.

The RCCWS meets the intent of the acceptance criteria of GDC 4 for normal operation, maintenance, and testing. The RCCWS meets the intent of the acceptance criteria of GDC 4 with respect to dynamic effects associated with water hammer. The RCCWS has high point vents and operation and maintenance procedures assure sufficient measures are taken to avoid water hammer. The RCCWS also meets the intent of the acceptance criteria of GDC 4 for other dynamic effects, including the effects of missiles, jet impingement, pipe whipping, and discharging fluids, as clarified by the following design considerations:

- Pipe routing;

- Piping design considerations, such as material selection, pipe size and schedule;
- Protective barriers as necessary; and
- Appropriate supports and restraints.

The RCCWS meets GDC 5 for shared systems and components important to safety. The RCCWS design does not share any SSC with any other unit.

Although the RCCWS is a nonsafety-related system, it meets the intent of certain acceptance criteria of GDCs 44, 45 and 46, as clarified by the following design considerations:

- Capability of transferring heat loads from SSCs to a heat sink under normal and accident conditions;
- Component redundancy so the system remains functional assuming a single active failure coincident with a loss of offsite power;
- Capability to isolate components or piping so system function is not compromised; and
- Design provisions to permit inspection and operational testing of components and equipment.

Power Generation Design Bases

The RCCWS provides cooling water to plant auxiliary equipment during start-up, normal power operation, hot standby, and plant cooldown. The temperature limits for the cooling water cold leg supplied for equipment cooling are shown in Table 9.2-4. The RCCWS is also designed to operate during a Loss of Preferred Power (LOPP).

The RCCWS is designed so that neither a single active nor credible single passive component failure results in a complete loss of active nuclear island cooling and/or plant dependence on any safety-related system.

The RCCWS is designed for ease of restoration after a single component failure without plant operating mode or power level change.

The RCCWS is designed to limit leakage of radioactive or chemical contamination to the environment.

9.2.2.2 System Description

Summary Description

The RCCWS provides cooling water to nonsafety-related components in the Nuclear Island and provides a barrier against radioactive contamination of the PSWS.

Simplified diagrams of the closed loop RCCWS are shown in Figure 9.2-2a and Figure 9.2-2b.

Detailed System Description

The RCCWS consists of two 100% capacity independent and redundant trains.

RCCWS cooling water is continuously circulated through various auxiliary equipment heat exchangers and rejects the heat to the PSWS. The nominal RCCWS heat loads are shown on Table 9.2-3. The RCCWS component design characteristics are shown on Table 9.2-4.

In the event of LOPP, the RCCWS supports the FAPCS and the RWCU/SDC in bringing the plant to cold shutdown condition in 36 hours if necessary assuming the most limiting single active failure. In addition, RCCWS provides cooling water to the Standby Onsite Alternating Current Power System Diesel Generators. RCCWS cooling water train supply valves (Direct Current [DC] powered motor-operated) automatically close upon a LOPP to prevent RCCWS pump runout and ensure sufficient cooling for the standy diesel generators. These valves are opened after the diesel generators are running as part of the load sequencing.

Each RCCWS train consists of parallel pumps, parallel heat exchangers, one surge tank, connecting piping, and instrumentation. Both trains share a chemical addition tank. The two trains are normally connected by crosstie piping during operation for flexibility, but may be isolated for individual train operation or maintenance of either train.

The pumps in each train discharge through check valves and butterfly valves to a common header leading to the RCCWS heat exchangers' header. Crosstie lines between each train are provided at the pump suction and discharge headers; and downstream of the Diesel Generators' cooling water supplies. There are two automatic train separation signals used to close the cross-tie valves. These signals are: 1) detection of unbalanced flow; and 2) a LOPP event. The heat exchanger outlet isolation valves are provided. The heat exchanger flow control valves, bypass temperature control valves, and cross-tie isolation valves are pneumatically operated.

RCCWS cooling water is supplied to the following major users:

- Chilled Water System (CWS) Nuclear Island chiller-condenser (Subsection 9.2.7)
- RWCU/SDC non-regenerative heat exchanger (Subsection 5.4.8)
- FAPCS heat exchanger (Subsection 9.1.3)
- Standby Onsite Alternating Current (AC) Power Supply Diesel Generator Jacket Cooling Water System (Subsection 9.5.5)

The flow paths to heat exchangers and coolers are provided with flow balancing features that may be fixed orifice plates and/or control or manual valves, which can also be used for isolation. The major heat exchangers and coolers have motor-operated isolation valves for operator convenience.

The RCCWS pumps and heat exchangers are located in the Turbine Building. Table 9.2-4 shows the characteristics of the RCCWS pumps and heat exchangers.

The pumps in each train are powered from separate buses. During a LOPP, the pumps are powered from the two nonsafety-related standby diesel-generators.

The RCCWS utilizes plate type heat exchangers. Leakage through holes or cracks in the plates is not considered credible based on industry experience with plate type heat exchangers. In addition, the heat exchangers are designed such that any gasket leakage from either RCCWS or PSWS drains to the Equipment and Floor Drain System. This design mitigates cross-contamination of either RCCWS or PSWS. Pressure and air relief valves are provided as necessary.

Surge tanks provide a constant pump suction head and allow for thermal expansion of the RCCWS inventory. The tanks are located above the highest point in the system. Makeup to the

RCCWS inventory is from the Makeup Water System (MWS) through an automatic level control valve. A manual valve provides a backup source of makeup from the Fire Protection System.

System Operation

The RCCWS operates during startup, normal power operation, hot standby, normal cooldown, shutdown/refueling, and LOPP.

RCCWS pump and heat exchanger configuration during each operational mode is shown in Table 9.2-5.

RCCWS heat exchanger operation is coordinated with PSWS flow. RCCWS cooling water flow through a RCCWS heat exchanger is only allowed if there is a corresponding PSWS water flow to absorb the heat load.

9.2.2.3 Safety Evaluation

The RCCWS has no safety-related function. Failure of the system does not compromise any safety-related system or component, nor does it prevent a safe shutdown of the plant.

There is no interface with the safety-related electrical system.

9.2.2.4 Testing and Inspection Requirements

All major components are tested and inspected as separate components prior to installation and as an integrated system after installation to ensure design performance. Additional testing details of RCCWS are described in Subsection 14.2.8.1.21.

Provision is made for periodic inspection of major components to ensure the continued capability and integrity of the system. Indicators are provided for vital parameters required for testing and inspection. Provisions for grab sampling of RCCWS cooling water are provided for chemical and radiological analyses.

9.2.2.5 Instrumentation Requirements

The RCCWS is operated and monitored from the Main Control Room (MCR). Major system parameters (loop flow rate, heat exchanger outlet temperature and pressure) are indicated in the MCR. Low pump discharge header pressure, high or low head tank level, and excessive makeup valve opening time are alarmed/annunciated in the MCR.

Temperature, pressure and level indicators provide additional component performance information.

The RCCWS heat exchanger isolation valves operate in coordination with the corresponding PSWS flow. Failure of a RCCWS pump automatically starts the standby pump. Failure of one of the electrical buses automatically starts the standby pump(s) in the unaffected train.

RCCWS radiation monitors are provided for monitoring radiation levels and alerting the plant operator of abnormal radiation levels.

This RCCWS instrumentation conforms to GDC 13. Refer to Subsection 3.1.2.4 for a general discussion of the GDC.

The RCCWS surge tank levels are used to monitor losses of cooling water, and detect intersystem leakage intrusions into RCCWS. The level transmitters in the surge tank standpipes in combination with low-low surge tank level automatically initiate a train shut down. A train shutdown signal will trip off all pumps in the train and close all isolation, bypass, and flow control valves.

9.2.2.6 COL Information

None

9.2.2.7 References

None

9.2.3 Makeup Water System

9.2.3.1 Design Bases

Safety Design Bases

The Makeup Water System (MWS) is a nonsafety-related system, and has no safety design basis other than provision for safety-related containment penetrations and isolation valves. The MWS meets GDC 2, as it relates to meeting the guidance of RG 1.29. The applicable sections of RG 1.29 include Position C.1 for safety-related portions and Position C.2 for nonsafety-related portions. The seismic and quality group classifications are identified in Table 3.2-1. The MWS meets GDC 5 for shared systems and components important to safety. The MWS Standard Plant design does not share any SSC with any other unit.

As discussed below, if available, the MWS can be used to provide makeup water to the IC/PCCS pools following an anticipated operational occurrence (AOO) or any abnormal event. However, this MWS function is not assumed or modeled in any safety analysis.

Power Generation Design Bases

The MWS is designed to supply demineralized water to the equipment and components shown in Table 9.2-6, and meets the water quality requirements shown in Tables 9.2-7 and 9.2-8.

The system provides the following design functions:

- Remove dissolved minerals, organics, and other impurities;
- Transfer Makeup Water throughout the entire plant; and
- Provide seven day capacity of makeup water demand during normal power generation (PG).

9.2.3.2 System Description

The MWS consists of two subsystems: (1) the demineralization subsystem and (2) the storage and transfer subsystem. The demineralization subsystem is a conceptual design that is dependent on the site-specific water quality of the available source water. The storage and transfer subsystem is a standard design applicable to any site. The makeup water transfer pumps and the demineralization subsystem are sized to meet the demineralized water needs of all operation

conditions except for shutdown/refueling/startup. During the shutdown/refueling/startup mode, the increases in plant water consumption may require use of a temporary demineralization subsystem and temporary makeup water transfer pumps to be used as a supplemental water source.

The MWS major equipment is housed entirely in the Service Water/Water Treatment Building except for the demineralized water storage tank (which is outdoors and adjacent to this building) and the distribution piping to the interface systems.

The MWS equipment and associated piping in contact with demineralized water are fabricated from corrosion resistant materials such as stainless steel to prevent contamination of the makeup water.

Table 9.2-9 lists and provides sizes of the major MWS components.

The above conceptual design information for the MWS will be replaced with site-specific design information in the COLA FSAR.

Demineralization Subsystem

Feedwater for the demineralization subsystem is drawn from the Station Water storage tank. Production of demineralized water by the demineralization subsystem can be initiated and shut down either manually or automatically based on the demineralized water storage tank level. A chemical addition system is located upstream of the cartridge filters to provide treatment to the pretreated water supplied by the Station Water System. One of the reverse osmosis high-pressure pumps provides the pressure required for flow through the reverse osmosis unit membranes. The second high-pressure pump is a backup. The reverse osmosis unit reject flow is sent to the cooling tower blowdown facility. Because of the pressure drop across the reverse osmosis membranes, product water is temporarily stored in the catch tank before being pumped by one of the forwarding pumps to the mixed bed demineralizer unit. Operation of the reverse osmosis high-pressure pumps is interlocked with that of the forwarding pumps. The reverse osmosis effluent is further processed through electro-deionization and/or mixed bed demineralization. The mixed bed demineralizer consists of both strong cation and anion resins in the same vessel that polishes the reverse osmosis product water. The mixed bed unit effluent is monitored for water quality. This effluent is automatically recirculated to the station water storage tank until the water quality requirements are met. Makeup water is then delivered to the MWS demineralized water storage tank. The modular design of the reverse osmosis unit and the mixed bed unit allows continuous demineralized water production. Cleaning, back flushing, or module removal are manual operations based on elevated differential pressure across the module or total flow through the system. No regeneration of mixed bed modules is performed onsite.

The above conceptual design information for the demineralization subsystem will be replaced with site-specific design information in the COLA FSAR.

Storage and Transfer Subsystem

The flow path of the storage and transfer subsystem of the MWS is from the MWS demineralized water storage tank, through a MWS transfer pump, to the interface systems. One pump operates continuously to maintain the system pressure. Increased demand or primary transfer pump failure automatically starts the second transfer pump.

9.2.3.3 Safety Evaluation

The MWS does not have any safety-related functions except for containment isolation. Failure of the MWS does not compromise any safety-related system or component nor does it prevent a safe shutdown. If available, MWS can be used to provide makeup water to the IC/PCCS pools following an AOO or any abnormal event. However, this MWS function is not assumed or modeled in any safety analysis.

9.2.3.4 Testing and Inspection Requirements

Initial preoperational acceptance testing of the MWS is performed to demonstrate proper system and component functioning. MWS functionality is continuously demonstrated during normal plant operation. MWS containment isolation components are designed to meet the in-service inspection requirements of ASME Section XI.

9.2.3.5 Instrumentation Requirements

Instrumentation provided for the MWS includes pressure, flow, level, conductivity, silica, chloride, and sodium. These parameters are monitored and recorded at the appropriate locations in the system. Monitoring and control of the MWS operation are provided on a local panel. Monitoring of storage tank water level is provided in the MCR.

Controls and interlocks are provided for the maintenance of MWS water quality and system equipment protection. Demineralizer effluent water quality and quantity is monitored and recorded. Out-of-specification water is automatically recirculated back to the source water storage tank and alarmed on the local control panel. Pumps are protected by a low tank level alarm on the suction side and minimum flow recirculation piping on the discharge side. Automatic controls are provided with manual backup.

This MWS instrumentation conforms to GDC 13. Refer to Subsection 3.1.2.4 for a general discussion of the GDC.

9.2.3.6 COL Information

None

9.2.3.7 References

9.2.3-1 Reg Guide 1.29 “Seismic Design Classification”

9.2.3-2 ASME Boiler and Pressure Vessel Code (BPVC), Section XI – Rules for Inservice Inspection of Nuclear Power Plant Components

9.2.4 Potable and Sanitary Water Systems

The Potable and Sanitary Water Systems design is dependent on the site-specific water pathways. The system is designed to supply up to 12.6 l/s (200 gpm) of potable water during peak demand periods.

The Potable and Sanitary Water Systems meet GDC 60 for provisions provided to control the release of liquid effluents containing radioactive material. The Potable and Sanitary Water

Systems have no interconnections to systems with the potential for containing radioactive material. The design of waste water effluent systems properly disposes of sanitation wastes.

The above conceptual design information for the Potable and Sanitary Water Systems will be replaced with site-specific design information in the COLA FSAR.

9.2.5 Ultimate Heat Sink

In the event of an accident, the Ultimate Heat Sink (UHS) is provided by the IC/PCCS pools, which provide the heat transfer mechanism for the reactor and containment to the atmosphere. Subsection 5.4.6 provides a discussion of the Isolation Condenser System (ICS). Subsection 6.2.2 provides a discussion of the Passive Containment Cooling System. To ensure sufficient water inventory for the initial 72 hours of an accident, the pool cross-connect valves between the equipment storage pool and IC/PCCS pools open on low level in the IC/PCCS pool.

The IC/PCCS pools meet GDC 2, by compliance with RG 1.29. The applicable sections of RG 1.29 include Positions C.1 and C.2. The seismic and quality group classifications are identified in Table 3.2-1. The IC/PCCS pools with makeup from the equipment storage pool and Reactor Well meet GDC 2, by compliance with RG 1.27 Positions C.2 and C.3 by providing a highly reliable source of decay heat removal. A separate safety-related reservoir is not required.

The IC/PCCS pools meet GDC 5 for shared systems and components important to safety. The IC/PCCS pools design does not share any SSC with any other unit.

The requirements of GDC 44 for heat transfer to the ultimate heat sink are met. The ESBWR ultimate heat sink is the IC/PCCS pools. In the event of a design basis accident, heat is transferred to the IC/PCCS pool(s) through either the Isolation Condenser System (ICS) and/or the Passive Containment Cooling System (PCCS). The water in the IC/PCCS pool(s) is allowed to boil and the resulting steam is vented to the environment. The water in the IC/PCCS pools, when combined with the equipment pool and reactor well, is sufficient to perform the safety-related function of transferring heat to the atmosphere for the initial 72 hours of an accident. The connections to the equipment storage pool are provided by the pool cross-connect valves, which are redundant and open on low level in either of the IC/PCCS inner expansion pools. Therefore, no credible single failure can prevent the IC/PCCS pools from performing their safety-related function.

The IC/PCCS pools are located outside containment and are accessible for periodic inspections. During outages, the IC/PCCS pool subcompartments and expansion pools can be drained to permit inspection of the pool liner and components of the ICS and PCCS, including the equipment storage pool connections. The features of the IC/PCCS pools meet the requirements of GDC 45.

The design of the IC/PCCS pools meets the requirements of GDC 46. Functional testing to assure structural leaktight integrity is accomplished by maintaining pool level and monitoring for leaks during periodic walkdowns. As discussed in the evaluation of GDC 44, the IC/PCCS pools require no active components aside from the connections to the equipment storage pool that can be periodically inspected or tested during a refueling outage. These inspections and tests combined with periodic inspections described in the response to GDC 45 verify system integrity and operability as a whole.

The Fire Protection System (FPS) provides post-accident makeup to the IC/PCCS pools through safety-related Fuel and Auxiliary Pools Cooling System (FAPCS) piping. The FPS also provides post-accident makeup to the Spent Fuel Pool (SFP). Subsection 9.5.1.1 discusses the FPS as a makeup water source through the FAPCS during accident events. Table 9.5-2 provides IC/PCCS pools and SFP minimum total makeup flow rate at 72 hours into an event. Subsection 9.5.1.4 states that the FPS provides onsite makeup water capability from 72 hours to 7 days, after which time offsite makeup sources can be provided via safety-related external FAPCS connections outside the Reactor and FB or onsite makeup sources, if available, can be used. Normally, the makeup water quality is required to meet demineralized water chemistry requirements. However, during accident conditions, makeup water quality as a minimum meets fire protection system or station water system water chemistry requirements. The COL Applicant will include in its operating procedure development program:

- Procedures that identify and prioritize available makeup sources seven days after an accident, and provide instructions for establishing necessary connections.
- Milestone for completing this category of operating procedures (COL 9.2.5-1-A).

The makeup water source is not required to be safety-related, but must be from either diverse sources or a highly reliable source.

The principal heat source is decay heat from the fuel. The decay heat input rate decreases with time as shown in the Figure 6.2-10c series of decay heat curves. Therefore, the required minimum total makeup water flow rate beyond 72 hours, as well as beyond seven days, into an event, would not exceed the required minimum total makeup water flow rate at 72 hours as shown in Table 9.5-2. The makeup water sources meet the minimum flow rate specified in Table 9.5-2. Subsection 9.1.3.2 discusses the use of the FAPCS to provide water after 72 hours post-accident.

9.2.5.1 COL Information

COL 9.2.5-1-A Post Seven day makeup to UHS

The COL Applicant will include in its operating procedure development program:

- Procedures that identify and prioritize available makeup sources seven days after an accident, and provide instructions for establishing necessary connections.
- Milestone for completing this category of operating procedures (Subsection 9.2.5).

9.2.5.2 References

9.2.5-1 Regulatory Guide 1.29 “Seismic Design Classification”

9.2.5-2 Regulatory Guide 1.27 “Ultimate Heat Sink for Nuclear Power Plants”

9.2.6 Condensate Storage and Transfer System

9.2.6.1 Design Bases

Safety Design Bases

The Condensate Storage and Transfer System (CS&TS) does not perform or ensure any safety-related function, and thus, has no safety design basis.

The CS&TS meets GDC 2 by compliance with RG 1.29. The applicable section of RG 1.29 includes Position C.2 for nonsafety-related portions. The seismic and quality group classifications are identified in Table 3.2-1.

The CS&TS is designed to Seismic Category II criteria when located in Seismic Category I buildings to preclude damage to safety-related equipment should a seismic event occur.

The CS&TS meets GDC 5 for shared systems and components important to safety. The CS&TS Standard Plant design does not share any SSC with any other unit.

The CS&TS is nonsafety-related and requirements of GDC 44, 45, and 46 are not applicable to the CS&TS Standard Design for the ESBWR.

The CS&TS meets GDC 60 by compliance with RG 1.143 Position C.1.2 for provisions to prevent uncontrolled releases of radioactive material.

The SBO requirements of RG 1.155 are met by providing a design to shut down safely without reliance on CS&TS.

Power Generation Design Bases

The Condensate Storage and Transfer System is designed to:

- Operate during plant startup, power operation, and normal shutdown. The system is not required to operate following loss of power or during any design basis event.
- Provide managed storage capacities in the condensate storage tank;
- Provide a distribution system to supply condensate quality water to equipment;
- Provide a 100% redundant backup transfer pump;
- Provide the capability to maintain the water quality requirements in the Condensate Storage Tank (CST) by pumping tank contents to the Liquid Radwaste System when the Condensate Purification System is not operating;
- Provide an enclosed area to retain any tank overflow or leakage until an appropriate disposal action is taken and;
- Provide sampling of the retention area sump prior to disposal to determine if the activity of the sump contents is within 10 CFR 20 limits.

9.2.6.2 System Description

The CS&TS consists of two independent and 100% redundant transfer pumps that take suction from the CST and provide water to interface systems as required. The CST provides storage capacity for condensate rejected from the Condensate and Feedwater System, for condensate

quality Liquid Waste Management System effluent during normal operation, and for Condensate and Feedwater System and condenser hotwell inventory during system maintenance outages. The CST also provides a minimum storage capacity for the CRD System as a reserve water source for RPV makeup following a Nuclear Steam Supply System (NSSS) isolation event. If available, the CS&TS reserve volume can be used to provide RPV makeup following an AOO or any abnormal event, such as an anticipated transient without scram (ATWS). However, this RPV makeup function is not required for any Design Basis Event. The CS&TS equipment and associated piping are fabricated from stainless steel to prevent contamination of the system water.

Condensate Storage Tank

The CST is the normal source of water for make up to selected plant systems. The condensate transfer pumps take their suction from the CST and provide makeup water for various services in the RB, the Turbine Building, FB, and the Radwaste Building(RW).

The makeup water transfer pumps supply makeup to the CST. The CST also acts as surge capacity for the condensate system by receiving rejected condensate from and making up water to the steam makeup-feedwater cycle. The tank overflows to the enclosed retention area. The tank nozzle location for the CRD pumps suction is located at a lower elevation than the nozzles for the condensate transfer pumps and the hotwell makeup line to ensure availability of the water volume reserved for the CRD System. Other water volumes generated during normal, refueling, and maintenance operations, shown in Table 9.2-10, are accommodated through management of the CST water level.

A basin surrounding the tank is designed to prevent uncontrolled runoff in the event of a tank failure. The enclosed space is sized to contain the total tank capacity. Tank overflow is also collected in this space. A sump is provided inside the retention area with provisions for sampling collected liquids prior to routing them to the Liquid Waste Management System or the storm sewer as per sampling and release requirements. These design features preclude uncontrolled releases to the environment.

Condensate Transfer Pumps

There are two 100% redundant condensate transfer pumps. One of the two transfer pumps runs continuously to provide condensate quality water as required. Minimum flow recirculation is provided for pump protection.

9.2.6.3 Safety Evaluation

The CS&TS does not perform or ensure any safety-related function. Failure of the system does not compromise any safety-related system or component, nor does it prevent safe shutdown of the plant.

9.2.6.4 Testing and Inspection Requirements

Initial preoperational acceptance testing of the CS&TS is performed to demonstrate proper system and equipment functioning. CS&TS functionality is demonstrated by continuous use during normal plant operation. CST grab samples are periodically taken and analyzed to monitor water quality.

9.2.6.5 Instrumentation Requirements

The redundant CS&TS pumps are interlocked to automatically start the standby pump on low discharge header pressure and the trip of an active pump is annunciated in the MCR. High discharge pressure stops the standby pump. Insufficient discharge pressure or low tank level initiates an alarm in the MCR. Level transmitters actuate a MCR alarm and shut off the condensate transfer pumps when the tank level reaches a minimum volume reserved for the CRD system shown on Table 9.2-10. The makeup water control valve level transmitters control the CST water level. An alarm is initiated if the CST level decreases below the level that opens the makeup water valve. An alarm actuates in the MCR if the CST water level increases above the level that isolates makeup water to the tank. This alarm point is lower than the overflow level. CST level indication is provided in the MCR.

The operating status of the CS&TS components, including CST level and pump header discharge pressure is monitored and indicated locally.

This instrumentation conforms to GDC 13. Refer to Subsection 3.1.2.4 for a general discussion of the GDC.

9.2.6.6 COL Information

None

9.2.6.7 References

9.2.6-1 Regulatory Guide 1.29, "Seismic Design Classification."

9.2.6-2 Regulatory Guide 1.143, "Design Guidance for Radioactive Waste Management Systems, Structures, and Components Installed in Light-Water-Cooled Nuclear Power Plants."

9.2.6-3 Regulatory Guide 1.155, "Station Blackout"

9.2.7 Chilled Water System

The Chilled Water System (CWS) consists of the Nuclear Island Chilled Water Subsystem (NICWS) and the Balance of Plant Chilled Water Subsystem (BOPCWS).

9.2.7.1 Design Bases

Safety Design Bases

The CWS does not perform or ensure any safety-related function, and thus, has no safety design basis, except for the containment isolation valves.

The NICWS has RTNSS functions as described in Appendix 19A, which provides the level of oversight and additional requirements to meet the RTNSS functions. Performance of RTNSS functions is assured by applying the defense-in-depth principles of redundancy and physical separation to ensure adequate reliability and availability as described in Subsection 19A.8.3.

The CWS meets GDC 2, by compliance with RG 1.29. The applicable sections of RG 1.29 include Position C.1 for safety-related portions and Position C.2 for nonsafety-related portions. The seismic and quality group classifications are identified in Table 3.2-1.

The CWS meets the intent of the acceptance criteria of GDC 4 for normal operation, maintenance, and testing. The CWS meets the intent of the acceptance criteria of GDC 4 with respect to dynamic effects associated with water hammer. The potential for water hammer is mitigated through the use of various system design and layout features, such as high point vents, valve cycle times, and surge tanks. Additionally, CWS operation and maintenance procedures incorporate necessary steps, such as proper line filling, to avoid water hammer. The CWS also meets the intent of the acceptance criteria of GDC 4 for other dynamic effects, including the effects of missiles, jet impingement, pipe whipping, and discharging fluids, as clarified by the following design considerations:

- Pipe routing;
- Piping design considerations, such as material selection, pipe size and schedule;
- Protective barriers as necessary; and
- Appropriate supports and restraints.

The CWS meets GDC 5 for shared systems and components important to safety. The CWS Standard Plant design does not share any SSC with any other unit.

Although the NICWS is a nonsafety-related system, it meets the intent of certain acceptance criteria of GDCs 44, 45 and 46, as clarified by the following design considerations:

- Capability of transferring heat loads from SSCs to a heat sink, via the RCCWS and PSWS, under normal and accident conditions;
- Component redundancy so the system remains functional assuming a single active failure coincident with a loss of offsite power;
- Capability to isolate components so system function is not compromised; and
- Design provisions to permit inspection and operational testing of components and equipment.

Power Generation Design Bases

The CWS is designed to provide chilled water to the plant facilities equipment at maximum demand.

The NICWS is designed to operate during a LOPP and can receive power from the onsite diesel-generators.

The heat exchangers associated with the Offgas System (OGS) handle potentially radioactive material at an operating pressure lower than the pressure of the water that cools it. Any tube leakage, therefore, results in flow from the CWS to the OGS.

The CWS is designed to Seismic Category II criteria when located in Seismic Category I buildings to preclude damage to safety-related equipment in a seismic event, except for the containment penetrations and isolation valves that are designed to Seismic Category I.

9.2.7.2 System Description

Summary Description

The CWS consists of two independent subsystems: the NICWS and the BOPCWS. The CWS provides chilled water to the cooling coils of air handling units and other coolers in the RB, Control Building (CB), Turbine Building, RW, Service Building, Electrical Building, Diesel Generator Building, FB, and Technical Support Center. The chilled water absorbs the rejected heat from these coolers and is pumped through the chillers where the heat is transferred to RCCWS and TCCWS. Cross-tie valves are provided allowing operational flexibility between the systems.

The components of both chilled water subsystems have the same design features. The following applies to both subsystems:

- The chiller units are packaged designs, including centrifugal compressor, condenser, evaporator, refrigerant piping, relief valve, instrumentation, pump out unit, oil heater, refrigerant, controls, and control panel. The compressor inlet guide vanes are modulated by the chiller leaving water temperature to regulate the chillers output capacity ; and
- The chiller units are capable of operating at partial capacity; varying from less than 25% to 100%.

The surge tanks provide a constant pump suction head and allow for thermal expansion/contraction of the chilled water inventory. Surge tanks are designed with sufficient makeup capacity to accommodate design leakage from the system. Surge tanks also provide NPSH to the CWS pumps and maintain system pressure above vapor pressure to mitigate voiding. The tanks are located a minimum of approximately one meter (three feet) above the highest system point and the use of sloped piping minimizes the potential for air binding. Makeup to the chilled water inventory is from the Makeup Water System through an automatic level control valve to the surge tanks.

The CWS component design characteristics are listed in Table 9.2-11. The CWS simplified diagram is shown in Figure 9.2-3.

Detailed NICWS Description

The NICWS consists of two 100% capacity trains (Train A and Train B), with redundancy and independence for active components. Each NICWS train consists of parallel pumps, parallel chillers, one surge tank, an air separator, startup strainer, active valves, and instrumentation. Chilled water is supplied from either train to a common header that distributes chilled water to the NICWS loads throughout the facility via a single piping distribution loop. Individual chillers and pumps are isolable for maintenance and repair. A chemical feed tank is installed in parallel with the loads for corrosion inhibitor addition to the chilled water. Each train is powered from separate buses. The following units are cooled by the NICWS:

- FB HVAC air handling units;
- CB HVAC air handling units;
- RB HVAC air handling units;
- Drywell Air Coolers;

- RCCWS equipment room HVAC fan coil units in Turbine Building;
- Service air compressor room HVAC fan coil units in Turbine Building;
- NICWS chiller room HVAC fan coil units in Turbine Building;
- Diesel Generator Control Equipment Room;
- Technical Support Center in Electrical Building; and
- Electrical Building HVAC air handling units.

The NICWS condensers are cooled by the RCCWS.

Detailed BOPCWS Description

The BOPCWS subsystem consists of one 100% capacity independent loop with crossties to the NICWS chilled water piping. BOPCWS consists of parallel water chiller units, including (one per chiller) local control panels, parallel chilled water circulating pumps (one per chiller), a surge tank, an air separator, startup strainer, piping, valves, instrumentation, and separate chemical feed tank. The chemical feed tank is installed in parallel to the loads for corrosion inhibitor addition to the chilled water. BOPCWS water chiller units are powered from separate buses than the NICWS water chiller units.

The following units are cooled by the BOPCWS:

- Turbine Building HVAC air handling units, and fan coil units;
- Offgas cooler condenser and building supply air units; and
- Radwaste Building HVAC air handling units.

The BOPCWS condensers are cooled by the TCCWS.

System Operation

The CWS remains functional during startup, normal, and shutdown operations. At least one chiller unit is in operation with the others on standby. Additional chiller units come into operation in a staggered manner based on the actual chilled water flow required for the plant as a whole. A flow measuring device in the common bypass line monitors the flow rate and its signal is used to control the staging of the chillers.

The CWS is designed so that a single active failure or malfunction of one NICWS train does not affect system functionality. In case of failure, the system automatically generates a train isolation signal.

The following actions are required in case of a train isolation signal:

- Closing cross-tie isolation valves;
- Startup the chillers and pumps on standby;
- Startup air handling units of NICWS scope;
- Startup the second fans in the Drywell Cooling System;

The following events require the automatic train isolation signal;

- Low level signal in surge tanks (Chilled water leakage exceeding makeup capacity);
- LOPP

During LOPP, the NICWS is automatically powered from two nonsafety-related onsite diesel generators.

9.2.7.3 Safety Evaluation

The CWS is classified as a nonsafety-related system except for its containment isolation functions. Refer to Subsection 6.2.4 for containment isolation valves and to Subsection 7.3.3 for containment isolation instrumentation.

9.2.7.4 Testing and Inspection Requirements

Initial testing of the system includes performance testing of the chillers, pumps and coils for conformance with design heat loads, water flows, and heat transfer capabilities. An integrity test is performed on the system upon completion.

Provision is made for periodic inspection of major components to ensure the capability and integrity of the system. Local display devices are provided to indicate all vital parameters during testing and inspections.

The pumps are tested in accordance with standards of the Hydraulic Institute ANSI/HI 1.6 (M104).

The functional capabilities of the containment isolation valves are testable in-place in accordance with the inservice inspection requirements. Periodic leak testing of the containment isolation valves is prescribed in the Technical Specifications (refer to DCD Chapter 16) and described in Subsection 6.2.6.

Samples of chilled water may be obtained for chemical analyses. System design ensures that the chilled water does not become radioactive during normal operation.

9.2.7.5 Instrumentation Requirements

The CWS status indications, control instrumentation, alarms and annunciators are located in the MCR to provide the operator sufficient data for remote operation of standby units. The plant-wide multiplexing system provides data communication and control.

The chillers and pumps automatically startup and shutdown according to chilled water flow required by the plant. They can also be manually started from the MCR or from the local chiller control panels. The local control panels display the active component operating status and system parameters including flows, temperatures, and pressures.

Chiller package protective controls and monitoring instruments indicate high and low oil pressure, condenser pressure, high and low chilled water temperature and flow, high and low condenser water temperature and flow, and unit diagnostics.

A CWS standby chiller unit starts automatically upon failure of an operating unit. Loss of chilled water or RCCWS/TCCWS cooling water flow automatically stops the chiller unit and associated chilled water recirculating pump.

The chilled water temperature is automatically controlled.

Protective interlocks prevent chiller start if there is no flow through the evaporator or if the RCCWS/TCCWS flow through the NICWS/BOPCWS condenser is out of range. An anti-recycle timer prevents successive compressor starts.

CWS system containment penetration line isolation valves automatically close on a containment isolation signal to control the NICWS flow into and out of the containment (refer to Subsection 6.2.4).

The surge tanks are provided with level controlled demineralized water makeup valves and high/low level alarms in the MCR. The CWS surge tank levels are used to monitor losses of chilled water, and detect inter-system leakage or intrusions into CWS. Low-low surge tank level will alarm in the Control Room. This alarm indicates that system leakage has exceeded makeup water capacity. High-high surge tank level alarms in the Control Room. This alarm indicates that there is inter-system leakage into CWS. The level transmitters in the surge tank standpipes monitor the surge tank levels to ensure that sufficient NPSH is available for pump operation.

This CWS instrumentation conforms to GDC 13. Refer to Subsection 3.1.2.4 for a general discussion of the GDC.

9.2.7.6 COL Information

None

9.2.7.7 References

9.2.7-1 (Deleted)

9.2.7-2 ANSI/HI 1.6 (M104), Centrifugal Pump Tests

9.2.8 Turbine Component Cooling Water System

9.2.8.1 Design Bases

Safety Design Bases

The Turbine Component Cooling Water System (TCCWS) does not perform or ensure any safety-related function, and thus, has no safety design basis.

There are no connections between the TCCWS and any safety-related systems.

Power Generation Design Bases

The TCCWS provides cooling water to all turbine island auxiliary equipment listed in Table 9.2-12.

During power operation, the TCCWS operates to provide a continuous supply of cooling water to the turbine island auxiliary equipment.

The TCCWS is designed to permit the maintenance of any single active component without interruption of the cooling function.

Makeup to the TCCWS is designed to permit continuous system operation with design failure leakage and to permit expeditious post-maintenance system refill.

The TCCWS includes an atmospheric surge tank located such that the water level in the tank is above any other component in the system.

The TCCWS utilizes plate and frame-type heat exchangers. This design mitigates cross-contamination between TCCWS and the PSWS.

9.2.8.2 System Description

Summary Description

The TCCWS is a single-loop system and consists of one surge tank, one chemical addition tank, pumps, heat exchangers connected in parallel, associated coolers, piping, valves, controls, and instrumentation. System parameters are shown in Table 9.2-12 and the system configuration is shown in Figure 9.2-4. Heat is removed from the TCCWS and transferred to the Nonsafety-Related PSWS (Subsection 9.2.1).

Detailed Description

The system is designed in accordance with Quality Group D specifications.

The chemical addition tank is located in the Turbine Building in close proximity to the TCCWS pumps.

The TCCWS pumps are constant speed electric motor-driven, horizontal centrifugal pumps. The pumps are connected in parallel with common suction and discharge lines.

The TCCWS heat exchanger capacity is based on the normal heat loads.

The surge tank is an atmospheric carbon steel tank located at the highest point in the TCCWS. The surge tank is provided with level transmitters and a level control valve to control makeup water addition. The surge tank is located at the highest point in the system and connected to the TCCWS pumps suction header.

System Operation

During normal power operation, the TCCWS pumps circulate water through one side of the TCCWS heat exchangers in service. The heat from the TCCWS is rejected to the PSWS that circulates water on the other side of the parallel plate TCCWS heat exchangers.

The standby TCCWS pump is automatically started on detection of low TCCWS pump discharge pressure. The standby TCCWS heat exchangers are placed in service manually.

Flow control valves regulate the cooling water flow to the turbine lube oil coolers and the generator hydrogen cooler. Control valves in the cooling water side of these components are throttled in response to temperature signals from the fluid being cooled.

TCCWS flow through heat exchangers and coolers are provided with fixed orifice plates, control valves, or manual valves for system balancing. Major heat exchangers and coolers have motor-operated isolation valves for operator convenience.

The surge tank provides a reservoir for leakage from the system and for the expansion and contraction of the cooling fluid with changes in the system temperature. The surge tank is connected to the system in the pump suction lines to ensure that adequate net positive suction head for the TCCWS pumps is available.

A control valve, which is actuated by level transmitters sensing the surge tank level automatically, controls demineralized makeup water to the TCCWS. A corrosion inhibitor is added to the system by means of the chemical addition tank.

9.2.8.3 Safety Evaluation

The TCCWS has no safety design basis and does not perform any safety-related function. Failure of the TCCWS does not affect any safety-related systems or components.

9.2.8.4 Tests and Inspections

All major components are tested and inspected separately prior to installation and as an integrated system after installation to ensure design performance.

The components of the TCCWS and associated instrumentation are accessible during plant operation for visual examination. Periodic inspections during normal operation are made to ensure functionality and integrity of the system. Inspections to verify the system condition include measurements of cooling water flows, temperatures, pressures, water quality, corrosion-erosion rate, control positions, and setpoints.

Additional testing details of TCCWS are described in Subsection 14.2.8.1.52.

9.2.8.5 Instrumentation Requirements

Pressure and temperature transmitters are provided as required for testing and balancing the system. Flow indicator taps are provided at strategic points in the system for initial balancing of the flows and verifying flows during plant operation.

Surge tank high- and low-level and TCCWS discharge pressure alarms are transmitted to the MCR.

Makeup flow to the TCCWS surge tank is initiated automatically on low surge tank level and is continued until the normal level is reestablished.

Provisions for taking TCCWS water samples are included.

The TCCWS instrumentation conforms to GDC 13. Refer to Subsection 3.1.2.4 for a general discussion of GDC 13.

9.2.8.6 COL Information

None

9.2.8.7 References

None

9.2.9 Hot Water System

The Hot Water System for the ESBWR design has been eliminated and this function replaced with electric heating coils (in-duct) for most building loads and radiant (wall mounted) heating coils for localized heating load.

9.2.10 Station Water System

9.2.10.1 Design Basis

Safety Design Bases

The Station Water System (SWS) does not perform any safety-related function. Therefore, the Station Water System has no safety design basis.

Power Generation Design Bases

The SWS provides a supply of water for the following services:

- Makeup water to the Circulating Water System (CIRC) cooling tower basin
- Makeup water to the Plant Service Water System (PSWS) cooling tower basins
- Feedwater to the Makeup Water System (MWS)
- Fill water to the Fire Protection System (FPS)

9.2.10.2 System Description

Summary Description

The Station Water System provides makeup water and feedwater to nonsafety-related systems.

Detailed System Description

The Station Water System consists of the following subsystems:

- Plant Cooling Tower Makeup System (PCTMS)
- Pretreated Water Supply System (PWSS)

The Plant Cooling Tower Makeup System provides makeup water to the cooling tower basins for both the Plant Service Water System (Subsection 9.2.1) and Circulating Water System (Subsection 10.4.5). The supply of water makes up for losses resulting from evaporation, drift, and blowdown from the cooling towers. In addition, the Plant Cooling Tower Makeup System provides makeup water to replace water used for PSWS strainer backwash. The Plant Cooling Tower Makeup System consists of a water source, pumps, strainers, connecting piping, valves and instrumentation.

The Pretreated Water Supply System chemically conditions and filters the water supplied to the Makeup Water System (Subsection 9.2.3) for further treatment for use as demineralized water. The Pretreated Water Supply System also supplies water to the Fire Protection System (Subsection 9.5.1) for filling the primary firewater tanks. In addition, the Pretreated Water Supply System provides Plant Service Water System cooling tower makeup as an alternate to the Plant Cooling Tower Makeup System. The Pretreated Water Supply System also provides water for the strainers and filter backwashes. The Pretreated Water Supply System consists of a water source, pumps, strainers, filters, chemical injection equipment, a station water storage tank, connecting piping, valves and instrumentation.

The above conceptual design information for the Station Water System will be replaced with site-specific design information in the Combined License Application Final Safety Analysis Report (COLA FSAR).

System Operation

The Plant Cooling Tower Makeup System is not required to operate to support any safety mode of plant operation.

The Pretreated Water Supply System is not required to operate to support any safety mode of plant operation.

9.2.10.3 Safety Evaluation

The Station Water System has no safety-related function. Failure of the system does not compromise any safety-related system or component, nor does it prevent a safe shutdown of the plant.

There is no interface with any safety-related component.

No interconnections exist between the Station Water System and any potentially radioactive system.

9.2.10.4 Testing and Inspection Requirements

The performance, structural, and leaktight integrity of system components is demonstrated by the continuous operation of the system.

9.2.10.5 Instrumentation Requirements

Instruments are provided for monitoring system parameters in the Main Control Room (MCR).

Pretreated station water storage tank high and low level, and low suction pressure for each pump taking suction from the storage tank are alarmed to the MCR.

Provisions for taking water samples are included.

9.2.10.6 COL Information

None

9.2.10.7 References

None

Table 9.2-1

PSWS Heat Loads

Normal Operation		
Trains A and B		
RCCW System:	33.8 MW	1.15×10^8 Btu/hr
TCCW System:	45.6 MW	1.56×10^8 Btu/hr
Total Trains A and B:	79.4 MW	2.71×10^8 Btu/hr
Normal Cooldown [1]		
Trains A and B		
RCCW System:	90.9 MW	3.10×10^8 Btu/hr
TCCW System:	21.0 MW	7.17×10^7 Btu/hr
Total Trains A and B:	111.9 MW	3.82×10^8 Btu/hr
Single Train Failure Cooldown [2]		
Train A or B		
RCCW System	59.8 MW	2.04×10^8 Btu/hr
TCCW System	21.0 MW	7.17×10^7 Btu/hr
Total Train A or B	80.8 MW	2.75×10^8 Btu/hr
LOPP Operation		
Single Train Failure, 2 PSWS Pumps	74.8 MW	2.55×10^8 Btu/hr
Both Trains, 3 PSWS Pumps	120.8 MW	4.12×10^8 Btu/hr

Note 1: Normal Shutdown Cooling such that the reactor coolant temperature is reduced to 60°C (140°F) in 24 hours.

Note 2: Design Limiting Condition - Reach cold shutdown conditions of 93.3°C (200°F) in 36 hours.

Table 9.2-2

PSWS Component Design Characteristics

PSWS Pumps	
Type	Vertical, wet-pit, centrifugal turbine
Quantity	4
Capacity Each	1.26 m^3/s (20,000 gpm)
Plant Service Water System[1]	
Flow (NPHS or AHS)	2.52 m^3/s (40,000 gpm)
PSWS Cooling Towers and Basins	
Type[2]	Mechanical draft, multi-cell, redundant adjustable speed, reversible fans
Quantity[2]	2
Heat Load Each[3]	83.5 MW (2.85x 10^8 BTU/hr)
Flow Rate (Water) Each	2.52 m^3/s (40000 gpm)
Ambient Wet Bulb Temperature[2]	27.8°C (82°F)
Approach Temperature[2,]	3.3°C (6°F)
Cold Leg Temperature	31.1°C (88°F)
Strainers	
Type	Automatic cleaning, basket
Quantity	4

[1] – PSWS required to remove 2.02 X 10^7 MJ (1.92 X 10^{10} BTU) for period of 7 days without active makeup

[2] – Conceptual Design Information

[3] – Minimum heat load cooling towers need to be able to reject

Table 9.2-3

RCCWS Nominal Heat Loads

Normal Operation		
Nominal Heat Load Contributions		
RWCU/SDC:	9.6 MW	32.8 MBtu/hr
FAPCS:	8.3 MW	28.3 MBtu/hr
CWS:	12.3 MW	41.9 MBtu/hr
Diesel Generator	0 MW	0 MBtu/hr
Other:	2.3 MW	7.8 MBtu/hr
Total Trains A & B:	32.5 MW	111 MBtu/hr
Normal Cooldown [2]		
Nominal Heat Load Contributions (Train A)		
RWCU/SDCS:	28 MW	95.6 MBtu/hr
FAPCS:	8.3 MW	28.3 MBtu/hr
CWS:	12.3 MW [1]	41.9 MBtu/hr
Other	1.9 MW	6.5 MBtu/hr
Diesel Generator A	0 MW	0 MBtu/hr
Total Train A:	50.5 MW	172 MBtu/hr
Nominal Heat Load Contributions (Train B)		
RWCU/SDC:	28 MW	95.6 MBtu/hr
FAPCS	8.3 MW	28.3 MBtu/hr
Diesel Generator B	0 MW	0 MBtu/hr
Other:	1.5 MW	5.1 MBtu/hr
Total Train B:	37.8 MW	129 MBtu/hr
Total Train A&B:	88.3 MW	301 MBtu/hr

Table 9.2-3

RCCWS Nominal Heat Loads (Continued)

Cooldown with LOPP		
Nominal Heat Load Contributions (Train A)		
RWCU/SDC:	28 MW	95.6 MBtu/hr
FAPCS:	8.3 MW	28.3 MBtu/hr
CWS:	12.3 MW [1]	41.9 MBtu/hr
Other	1.9 MW	6.5 MBtu/hr
Diesel Generator A	15 MW	51.1 MBtu/hr
Total Train A:	65.5 MW	223.4 MBtu/hr
Nominal Heat Load Contributions (Train B)		
RWCU/SDC:	28 MW	95.6 MBtu/hr
FAPCS	8.3 MW	28.3 MBtu/hr
Diesel Generator B	15 MW	51.1 MBtu/hr
Other:	1.4 MW	4.8 MBtu/hr
Total Train B:	52.7 MW	179.8 MBtu/hr
Total Train A&B:	118.2 MW	403.2 MBtu/hr
Single Failure Cooldown (Extended Cooldown)		
Nominal Heat Load Contributions (Train A or B)		
RWCU/SDC:	36 MW	123 MBtu/hr
FAPCS:	8.3 MW	28.3 MBtu/hr
CWS:	12.3 MW	41.9 MBtu/hr
Diesel Generator	0 MW	0 MBtu/hr
Other:	1.9 MW	6.5 MBtu/hr
Total Train A or B:	58.5 MW	200 MBtu/hr

Table 9.2-3
RCCWS Nominal Heat Loads (Continued)

Single Failure Cooldown w/ LOPP [3]		
Nominal Heat Load Contributions (Train A or B)		
RWCU/SDC:	36 MW	123 MBtu/hr
FAPCS:	8.3 MW	28.3 MBtu/hr
CWS:	12.3 MW	41.9 MBtu/hr
Diesel Generator	15 MW	51.1 MBtu/hr
Other:	1.9 MW	6.5 MBtu/hr
Total Train A or B:	73.5 MW	250.8 MBtu/hr

1 Total CWS Heat Load shown is applicable to Train A or B, or shared between the two trains.

2 Normal Shutdown Cooling such that the reactor coolant temperature is reduced to 60°C (140°F) in 24 hours.

3 Design Limiting Condition - Reach cold shutdown conditions of 93.3°C (200°F) in 36 hours.

Table 9.2-4

RCCWS Component Design Characteristics

Pumps	
Type	Horizontal, centrifugal
Quantity	6
Capacity each	1,350 m^3/h (5,944 gpm)
Heat Exchangers	
Type	Horizontal Plate
Quantity	6
Cooling Capacity (Nominal)	30.56 MW (104.3 MBtu/h)
RCCWS Flow per Unit	1,350 m^3/h (5,944 gpm)
Maximum Operating RCCWS Cold Leg Supply Temperature	35°C (95°F)
Minimum Operating RCCWS Cold Leg Supply Temperature	15°C (59°F)
Maximum Operating PSWS Cold Leg Temperature	31.1°C (88°F)
Material (Plates)	Titanium or Stainless Steel*

*Site-specific water quality is used to determine the material selection for heat exchangers

Table 9.2-5

RCCWS Configuration by Mode

Operation Mode	No. Train A Pumps Used	No. Train B Pumps Used	No. Train A HX Used	No. Train B HX Used	Total No. Pumps Used	Total No. HX Used	Total Cooling Water Flow
Normal Operation	1	1	1	1	2	2	2,700 m^3/hr (11,888 gpm)
Normal Cooldown [1]	2	2	2	2	4	4	5,400 m^3/hr (23,775 gpm)
Cooldown w/ Single Failure of Train A	0	2	0	2	2	2	2,700 m^3/hr (11,888gpm)
Cooldown w/ Single Failure of Train B	2	0	2	0	2	2	2,700 m^3/hr (11,888gpm)
Cooldown w/ Single Failure of Train A w/ LOPP [2]	0	3	0	3	3	3	4,050 m^3/hr (17,832 gpm)
Cooldown w/ Single Failure of Train B w/ LOPP	3	0	3	0	3	3	4,050 m^3/hr (17,832 gpm)
Normal Cooldown w/ LOPP [2]	3	3	3	3	6	6	8,100 m^3/hr (35,663 gpm)

1. Normal Shutdown Cooling such that the reactor coolant temperature is reduced to 60°C (140°F) in 24 hours.

2. Design Limiting Condition - Reach cold shutdown conditions of 93.3°C (200°F) in 36 hours.

Table 9.2-6

Makeup Water System Supplied Equipment

The Makeup Water System provides water for the following:	
1	CST makeup
2	Standby Liquid Control System makeup
3	Liquid Waste System chemical addition and line flushing
4	Solid Waste System line flushing
5	Reactor Component Cooling Water System makeup
6	Turbine Component Cooling Water System makeup
7	Chilled Water System makeup
8	Process Sampling System process use
9	Auxiliary Boiler System makeup
10	HVAC makeup
11	Miscellaneous uses
12	IC/PCCS Pool normal makeup water

Table 9.2-7

Makeup Water System Demineralized Water Storage Tank Nominal Water Quality Requirements

Water Quality Parameter	Operating Target	System Design	Maximum Value
Chloride (ppb as Cl)	2.5	5.0	25.0
Sulfate (ppb as SO_4)	2.5	5.0	25.0
Conductivity at 25°C (µS/cm)*	0.2	0.3	1.0
Silica (ppb as SiO_2)	5.0	10.0	50.0
Corrosion Product Metals			
Iron (ppb as Fe)	8.0	16.0	80.0
Copper (ppb as Cu)	1.0	2.0	10.0
All Other Metals (ppb as the metal)	1.0	2.0	10.0
Total Metals (ppb as the metal)	10.0	20.0	100.0
Total Organic Carbon (TOC) (ppb)**	10	20	100

* Does not include an incremental conductivity value of 0.8 µS/cm at 25°C caused by carbon dioxide from air in water stored in tanks open to the atmosphere.

** Organic impurity values apply to fresh makeup water stored in the demineralized water storage tank.

Table 9.2-8

Makeup Water System Demineralizer Effluent Nominal Water Quality Requirements

Water Quality Parameter	Operating Target	System Design	Maximum Value
Demineralizer Effluent			
Chloride (ppb as Cl)	1.0	2.0	10.0
Sulfate (ppb as SO_4)	1.0	2.0	10.0
Conductivity at 25°C (µS/cm)	0.065	0.075	0.20
Silica (ppb as SiO_2)	1.0	2.0	10.0
Corrosion Product Metals			
Iron (ppb as Fe)	4.0	8.0	40.0
Copper (ppb as Cu)	0.5	1.0	5.0
All Other Metals (ppb as the metal)	0.5	1.0	5.0
Total Metals (ppb as the metal)	5.0	10.0	50.0
Total Organic Carbon (TOC) (ppb)	10	20	100

Table 9.2-9

Major Makeup Water System Components

- Two 5-micron cartridge filters, each rated 1,999 l/min (528 gpm).
- Two reverse osmosis high-pressure pumps, each rated at 1,999 l/min (528 gpm).
- One reverse osmosis unit rated at 1,499 l/min (396 gpm). This unit consists of multiple modules.
- One chemical treatment system that provides pretreatment and membrane cleaning specific to the reverse osmosis membrane type.
- One reverse osmosis product water catch tank with two 1,499 l/min (396 gpm) product forwarding pumps.
- One 1,499 l/min (396 gpm) mixed bed demineralizer unit consisting of multiple modules.
- One 950 m^3 (250,963 gal) demineralized water storage tank.
- Two 1,249 l/min (330 gpm) makeup water transfer pumps.

Table 9.2-10

Capacity Requirements for the Condensate Storage Tank

Function	Capacity Required	Time Period
Storage capacity to drain the Condensate and Feedwater System and the condenser	2,960 m^3 (781,950 gal)	Maintenance outages
Condensate quality water reclaimed from the Liquid Waste Management System	270 m^3/day (71,326 gal per day)	Normal operations; Maintenance outages
Dedicated volume for CRD System following a NSSS isolation event*	948 m^3 (250,435 gal)	Normal operations
Total CST capacity	4885 m^3 (1,290,480 gal)	N/A

* The alarm level volume includes the volume required for transients and for the CRD System following a NSSS isolation event.

Table 9.2-11

Chilled Water System Component Design Characteristics

CWS Chiller Units	
Quantity	7*
Cooling capacity (each)	4.85 x 10^6W (16.55 x 10^6 Btu/hr) *
Condensers	
Flow Rate (each)	383 m^3/hr (1686 gpm)*
Inlet Water Temperature	35°C (95°F)*
Outlet Water Temperature	48.9°C (120°F)*
Evaporators	
Flow Rate	600 m^3/hr (2640 gpm)*
Chilled Water Temperature, ΔT	7°C (12.6°F)
Compressors	
Type	Centrifugal, electric motor driven
Power	1350 kW (1810 hp) max*
Circulating Pumps	
Quantity	7*
Type	Centrifugal
Flow	600 m^3/hr (2640 gpm)*
Surge tanks	
Quantity	3
Type	Vertical, cylindrical
Piping	
Material (NICWS)	Carbon Steel
Material (BOPCWS)	Carbon Steel

* The number of chillers, chiller unit cooling capacity and other CWS component design characteristics are typical and correspond to CWS chilled water load of 19,110 kW (6.5 x 10^7 Btu/hr).

Table 9.2-12

Turbine Component Cooling Water System Heat Loads

The TCCWS removes heat from the following components:	
– Balance of Plant chiller condensers – Generator stator cooling water heat exchangers – Main generator hydrogen coolers – Main turbine lube oil coolers – Mechanical vacuum pump coolers – Iso-phase bus coolers – Electro hydraulic control (EHC) system coolers – Reactor feedwater pump motor and adjustable speed drive (ASD) coolers – Reactor feedwater booster pump motor coolers – Condensate pump motor coolers – And other miscellaneous coolers	
System parameters	
Maximum cold leg temperature	35°C (95°F)
Pumps	
Type	Horizontal, split case, single stage, centrifugal
Quantity	3 x 50%

Table 9.2-12
Turbine Component Cooling Water System Heat Loads (Continued)

Heat Exchangers	
Type	Horizontal Plate
Quantity	4 x 50%
Maximum Operating TCCWS Cold Leg Supply Temperature	35°C (95°F)
Maximum Operating PSWS Cold Leg Temperature	31.1°C (88°F)
Material (Plates)	Titanium or Stainless Steel*

* Site-specific water quality is used to determine the material selection for heat exchangers

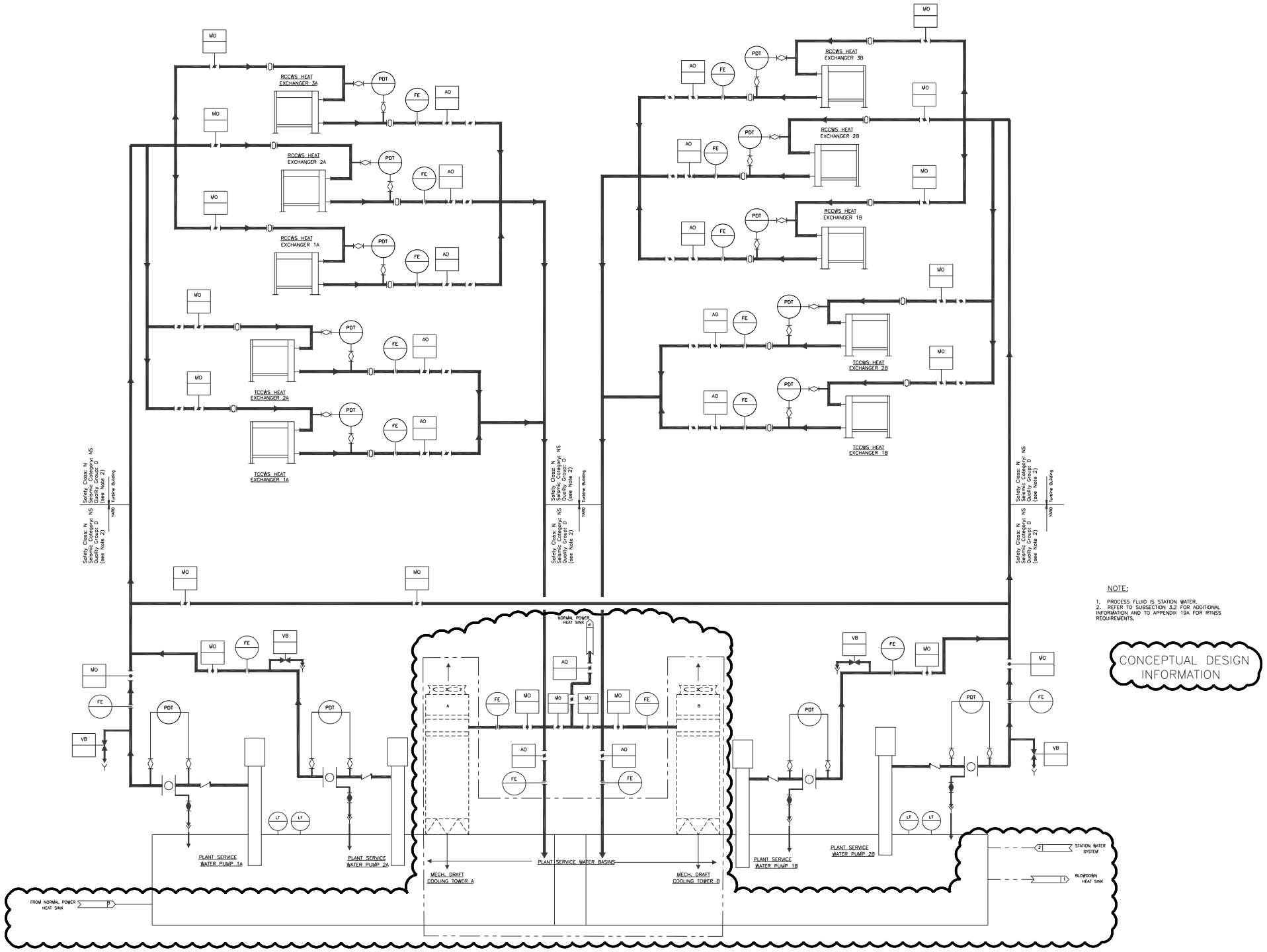

Figure 9.2-1. Plant Service Water System Simplified Diagram

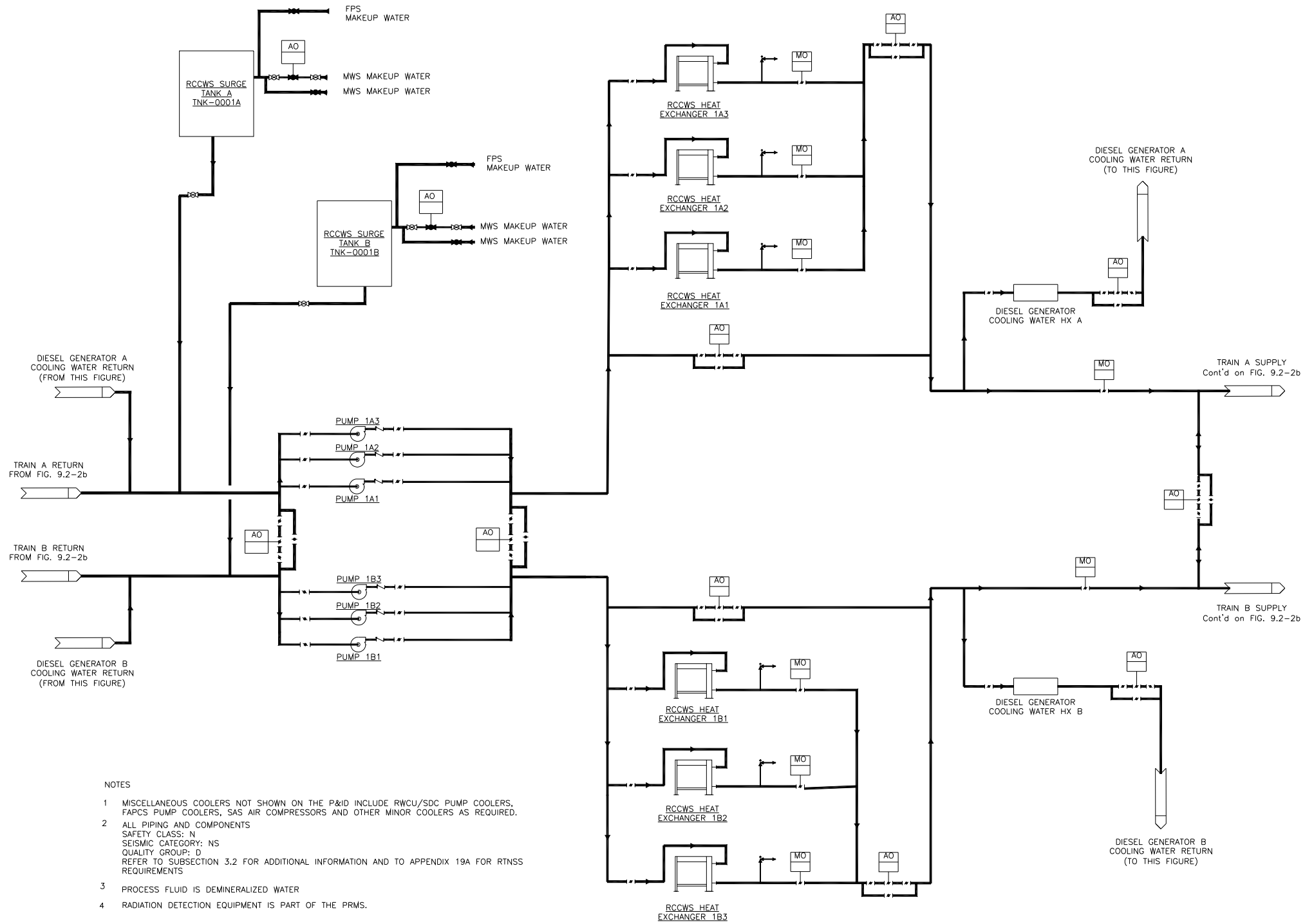

Figure 9.2-2a. Reactor Component Cooling Water System

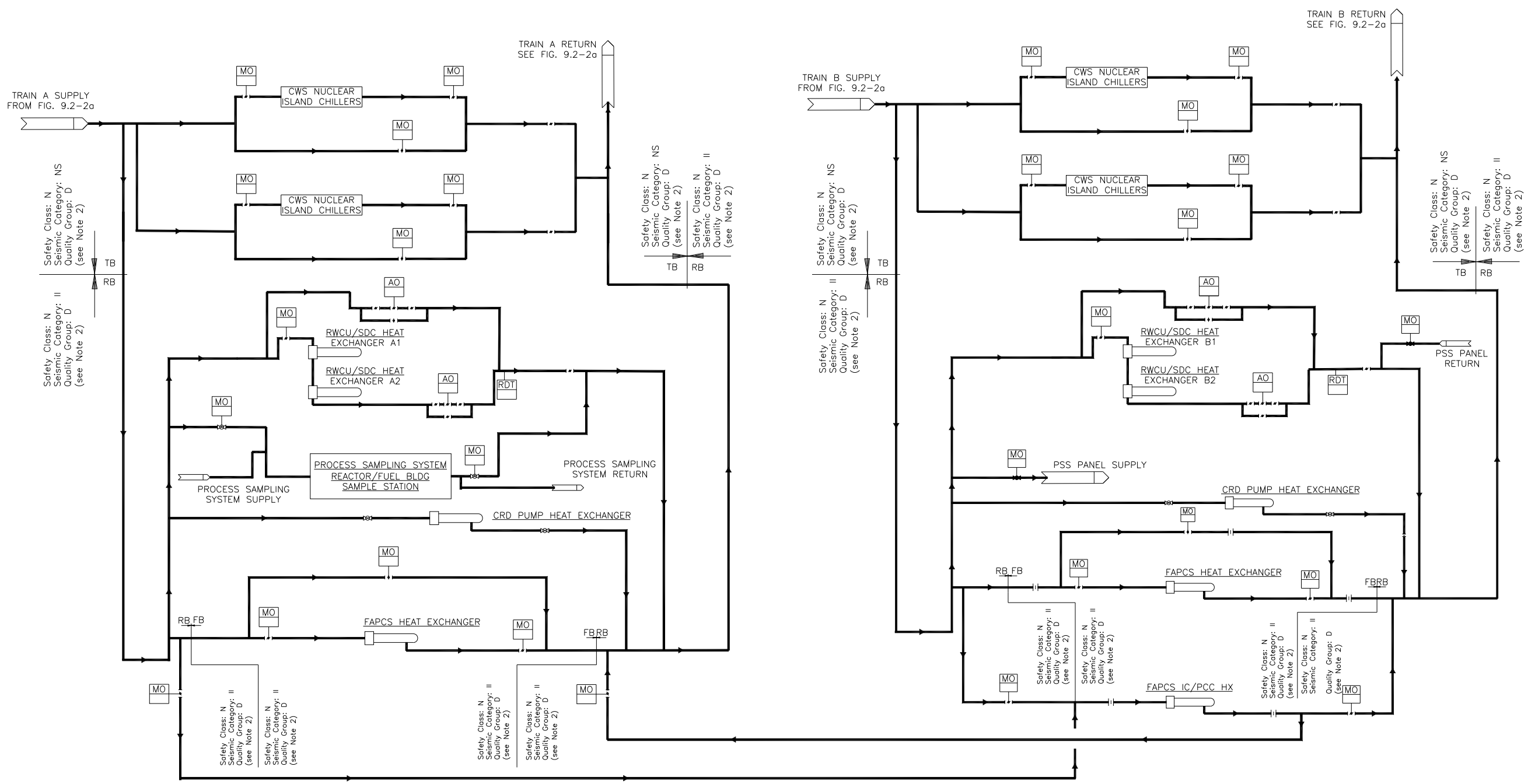

NOTES

1 MISCELLANEOUS COOLERS NOT SHOWN ON THE P&ID INCLUDE RWCU/SDC PUMP COOLERS, FAPCS PUMP COOLERS, SAS AIR COMPRESSORS AND OTHER MINOR COOLERS AS REQUIRED.

2 REFER TO SUBSECTION 3.2 FOR ADDITIONAL INFORMATION AND TO APPENDIX 19A FOR RTNSS REQUIREMENTS.

3 PROCESS FLUID IS DEMINERALIZED WATER.

4 RADIATION DETECTION EQUIPMENT IS PART OF THE PRMS.

Figure 9.2-2b Reactor Component Cooling Water System

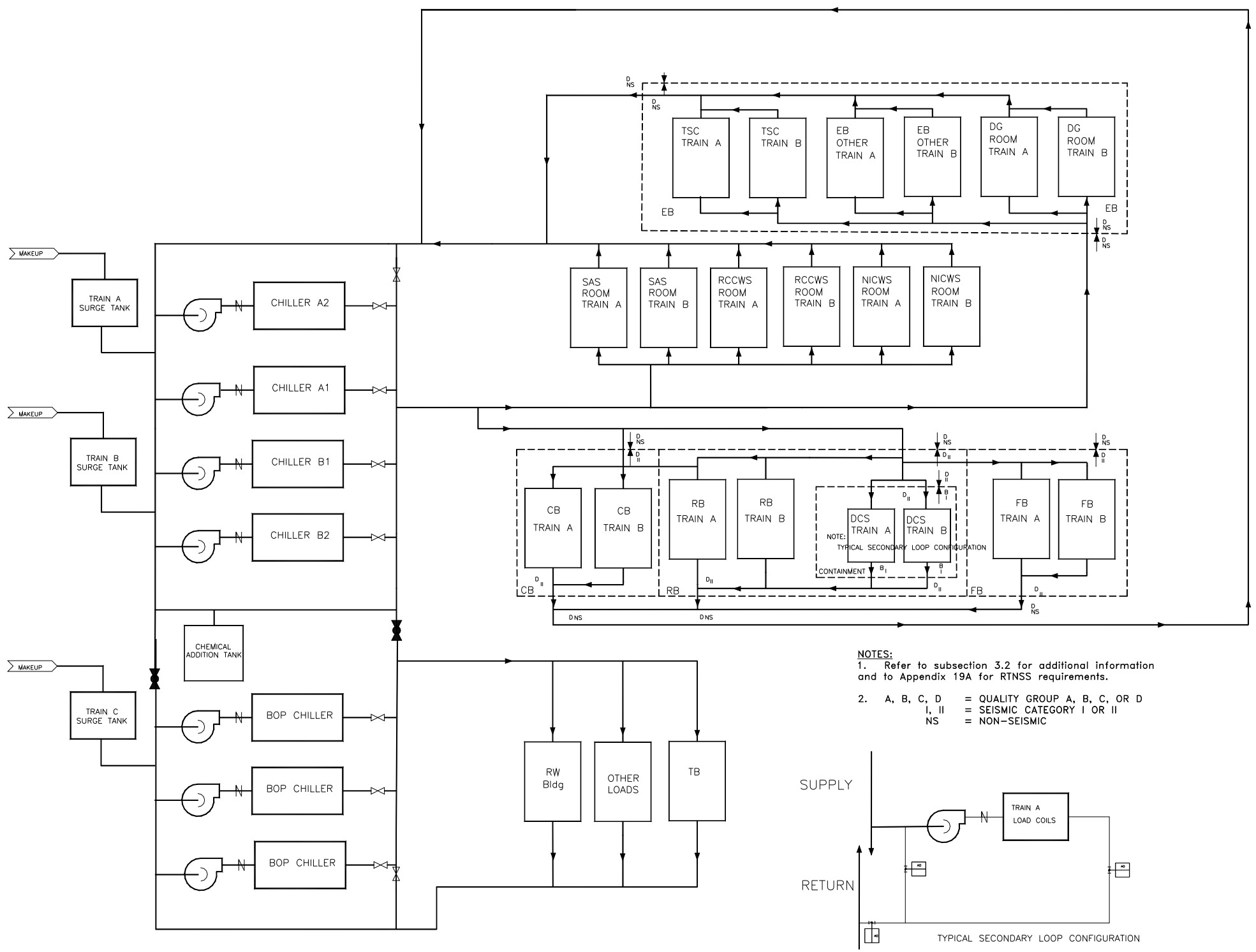

Figure 9.2-3. Chilled Water System Simplified Diagram

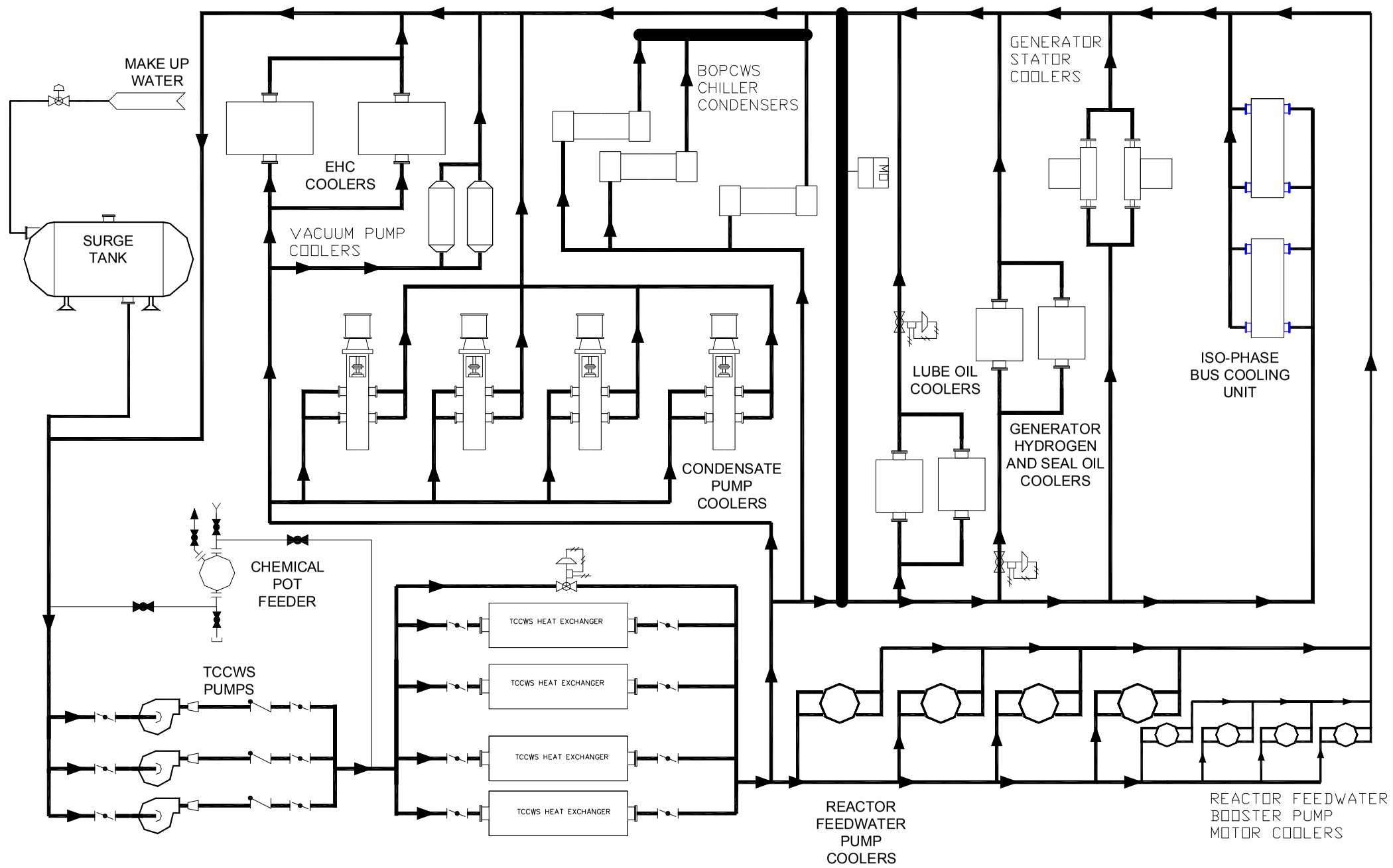

Figure 9.2-4. Turbine Component Cooling Water System Configuration

9.3 PROCESS AUXILIARIES

9.3.1 Compressed Air Systems

Compressed air systems include the Instrument Air System (IAS), the Service Air System (SAS), the Containment Inerting System (CIS) and the High Pressure Nitrogen Supply System (HPNSS). The IAS is discussed in Subsection 9.3.6; the SAS is discussed in Subsection 9.3.7. The CIS is described in Subsection 6.2.5.2 and the HPNSS is described in Subsection 9.3.8. The CIS and the HPNSS provide nitrogen gas for instruments and valve operators within the inerted containment. Compressed air operated components having safety-related or RTNSS required functions, either have safety-related accumulators or are fail-safe and do not rely on any of the compressed air systems to perform these functions.

9.3.2 Process Sampling System

9.3.2.1 Design Bases

Safety Design Bases

The Process Sampling System (PSS) does not perform or ensure any safety-related function. Therefore, this system has no safety-related design basis. The post-accident monitoring program uses sample point parameters and key sample locations as described in this Subsection and Subsections 7.5.1 and 7.5.2. This subsection addresses applicable requirements of General Design Criteria relative to PSS as discussed in Standard Review Plan Section 9.3.2.II.

PSS is in conformance with the relevant requirements and criteria stipulated in the codes and standards identified below:

- 10 CFR 20 & 20.1101(b);
- 10 CFR 50, Appendix A, GDC 1, 2, 13, 14, 26, 41, 60, 63, and 64;
- RG 1.21, 1.26, 1.29, 1.33, 1.56, 1.97, and 8.8;
- NUREG-0737, Item II.B.3;
- ANSI/HPS N13.1; and
- EPRI BWRVIP-130: BWR Vessel and Internals Project BWR Water Chemistry Guidelines (EPRI TR-1008192).

Relaxation of PSS requirements (References 9.3.2-12 and 9.3.2-13) means conformance to 10 CFR 50.34(f)(2)(viii) and 10 CFR 50.34(f)(2)(xxvi) is not required.

Power Generation Design Bases

The Process Sampling System (PSS) collects representative liquid and gaseous samples for analysis and provides the analytical information required to monitor plant and equipment performance and changes to operating parameters.

The PSS is designed to function during all plant operational modes under individual system requirements. Design guidelines related to PSS capabilities, the attainment of representative samples, and safety are described in the following paragraphs and in Table 9.3-1.

The design provides the capability to meet the requirements of NEDO-32991-A, "Regulatory Relaxation for BWR Post-Accident Sampling Stations (PASS)".

9.3.2.2 System Description

Summary Description

The PSS provides sampling of all principle fluid process streams associated with plant operation. The PSS consists of:

- Permanently installed sample lines;
- Sampling panels with analyzers and associated sampling equipment;
- Provisions for local grab sampling; and
- Permanent shielding.

Table 9.3-1 provides a list of the sample points and analyzed parameters and identifies parameters required to be assessed as part of the post-accident sampling program per SRP 9.3.2. The COL applicant shall develop a post-accident sampling program to monitor, as a minimum, the parameters delineated in Table 9.3-1 and SRP 9.3.2 (COL 9.3.2-1-A).

Provisions for Obtaining Representative Samples

Where practical, sample connections are located in turbulent flow zones to ensure adequate mixing.

Connection is made on the side of horizontal process pipe runs.

Sampling lines are sized to maintain turbulent flow and to minimize purge time. Routing is as short and as straight as possible. Large radius bends are used to avoid traps and dead legs.

Sampling lines and associated valves and fittings are fabricated from stainless steel.

Heat tracing of sampling lines is provided as necessary to prevent plateout, crystallization or solidification of contents.

Cooling capabilities are provided for temperature control of the samples as required.

Sampling equipment is designed with flushing and blowdown capability in order to remove sediment deposits, air and gas pockets. Provisions are made to purge sample lines in the stations. All flushing fluids are either returned to appropriate process streams or sent to the radwaste system, except as noted.

Detailed System Description

Continuous sample flows are routed from select locations in the process streams to the sampling stations. The sample flows enter the sample stations where pressure, temperature, and flow adjustments are made as necessary. Facilities for grab sampling and special monitoring are provided. Continuous samples are diverted to continuous monitoring equipment. The continuous monitoring equipment transmits signals to the plant computer located in the MCR. Alarms are provided for indicating off-normal conditions. The parameters monitored for each process stream are described in Table 9.3-1. The sample station's effluents are returned to an

appropriate process stream or to the radwaste drain headers through a common return line. ALARA is considered in station layout and design.

Reactor Building Sample Station

The RB Sample Station processes samples from the following systems for analysis:

- Reactor Water Cleanup/Shutdown Cooling System (RWCU/SDC);
- Control Rod Drive (CRD) System;
- Fuel and Auxiliary Pools Cooling System (FAPCS).

Auxiliary pools, including the Suppression Pool, Gravity-Driven Cooling System pools and Isolation Condenser/Passive Containment Cooling pools, are monitored during the cooling and cleanup modes of FAPCS.

Typical process stream sample parameters for the RB Sample Station are provided in Table 9.3-1. Grab sample facilities are also provided at the RB Sample Station.

Turbine Building Sample Station

The Turbine Buidling (TB) Sample Station is located in the TB. Process samples from the following systems are routed to this panel for monitoring:

- Condensate and Feedwater System;
- Moisture Separator Reheater System;
- Heater Drain and Vent System;
- Generator Cooling System; and
- Main Steam System.

Typical process stream sample parameters for the TB Sample Station are provided in Table 9.3-1. Grab sample facilities are also provided at the TB Sample Station.

A separate sample panel is provided for conditioning and analysis of Main Steam System samples.

Condensate Polishing Sample Station

The Condensate Polishing Sample Station is located in the Turbine Building. Process samples from the following systems are routed to this panel for monitoring:

- Condensate and Feedwater System
- Condensate Purification System

Typical process stream sample parameters for the Condensate Polishing Sample Station are provided in Table 9.3-1. Grab sample facilities are also provided at the Condensate Polishing Sample Station.

Condenser Sample Station

The Condenser Sample Station is located in the Turbine Building. Process samples from the Main Condenser and Auxiliaries are routed to this panel for analysis.

Typical process stream sample parameters for the Condenser Sample Station are provided in Table 9.3-1. Grab sample facilities are also provided at the Condenser Sample Station.

Radwaste Building Sample Station

The RW Sample Station is located in the RW. This sample station maintains continuous conductivity monitoring of the equipment and floor drain influents. Additional grab samples are drawn from selected locations in the Radwaste System.

Auxiliary Boiler Building Sample Station

The Auxiliary Boiler Building Sample Station is located in the Auxiliary Boiler Building. This station is used to monitor the water quality of the Auxiliary Boiler System. Process samples from the Auxiliary Boiler System are routed to this panel for analysis.

Typical process stream sample parameters for the Auxiliary Boiler Building Sample Station are provided in Table 9.3-1. Grab sample facilities are also provided at the Auxiliary Boiler Building Sample Station.

Local Grab Sampling Stations

Local grab sampling points are located throughout the plant to monitor process streams requiring intermittent sampling. Local grab sampling points are provided for the following systems:

- Reactor Component Cooling Water System
- Turbine Component Cooling Water System
- Plant Service Water System
- Chilled Water System
- Circulating Water System
- Standby Liquid Control System
- Makeup Water System
- Condensate Storage and Transfer System
- Equipment and Floor Drain System

Grab sample stations are used when the operating conditions of the process stream being sampled are suitable for operator handling without any conditioning.

Sample Piping Design

Sample lines are routed to be as short as possible, avoiding traps, dead legs and dips upstream of the sample stations. Lines are sized to maintain turbulent flow at the minimum required flow for each sample line.

The seismic design and quality group classifications of sample lines and their components conform to the classification of the system to which they are connected, up to and including the block valve (or valves). Sample lines downstream of the block valves are in conformance with ASME B31.1, Power Piping Code.

All sampling lines have the process isolation block valves located as close as practical to the process taps. These valves may be closed if sample line rupture occurs downstream of the valves.

9.3.2.3 Safety Evaluation

The operation of the PSS is not required for any of the following:

- Integrity of the reactor coolant pressure boundary;
- Capability to shut down the reactor and maintain it in a safe shutdown condition; and
- Ability to prevent or mitigate the consequences of accidents that can result in potential offsite exposures comparable to the exposure limits of 10 CFR 52.47(a)(2)(iv).

However, the system incorporates features that improve operator safety. The sampling stations are closed systems and the grab samples taken at the sampling stations have a chemical fume hood to preclude the exposure of operating personnel to contamination hazards. A constant air velocity is maintained through the working face of the hoods to ensure that airborne contamination does not escape to the room under operating conditions.

In the event of a loss of cooling water to a sample cooler or sample flow in excess of sample cooler capacity, the sampling system valves are interlocked to prevent high-temperature water flow through the lines.

Safety/relief valves, vented to the drain headers, are provided in the stations for high-pressure process streams.

9.3.2.4 Tests and Inspections

The sample stations are in continuous use during normal plant operation, therefore PSS functionality is continuously demonstrated during normal plant operation. The sample stations are tested and calibrated at frequencies in accordance with the sample station supplier's operation and maintenance requirements.

9.3.2.5 Instrumentation Requirements

PSS instrumentation is provided in each sample station for the following:

- Provisions are made to stop sample flow upon detection of high-temperature sample flow leaving the sample cooler;
- Pressure and temperature indication is provided for all high-pressure and high-temperature samples, respectively;
- Process conditions are measured and recorded for each sample flow;
- Alarms are provided for necessary measurement indications; and
- Provisions are made for sample flow to be indicated.

Additional monitoring equipment is provided within the panels to meet the process stream monitoring conditions listed in Table 9.3-1.

9.3.2.6 COL Information

9.3.2-1-A Post-Accident Sampling Program

The COL applicant shall develop a post-accident sampling program to monitor, as a minimum, the parameters delineated in Table 9.3-1 and SRP 9.3.2 (Subsection 9.3.2.2).

9.3.2.7 References

9.3.2-1 NUREG 0800, Standard Review Plan, Section 9.3.2.II, "Process and Post-Accident Sampling Systems."

9.3.2-2 Regulatory Guide 1.21, "Measuring and Reporting Radioactivity in Solid Wastes and Releases of Radioactive Materials in Liquid and Gaseous Effluents from Light-Water-Cooled Nuclear Power Plants."

9.3.2-3 Regulatory Guide 1.26, "Quality Group Classifications and Standards for Water-, Steam-, and Radioactive-Waste-Containing Components of Nuclear Power Plants."

9.3.2-4 Regulatory Guide 1.29, "Seismic Design Classification."

9.3.2-5 Regulatory Guide 1.33, "Quality Assurance Program Requirements."

9.3.2-6 Regulatory Guide 1.56, "Maintenance of Water Purity in Boiling Water Reactors."

9.3.2-7 Regulatory Guide 1.97, "Instrumentation for Light-Water-Cooled Nuclear Power Plants to Assess Plant Conditions During and Following an Accident."

9.3.2-8 Regulatory Guide 8.8, "Information Relevant to Ensuring that Occupational Radiation Exposures at Nuclear Power Stations Will Be As Low As Is Reasonably Achievable."

9.3.2-9 ANSI/HPS N13.1, "Sampling and Monitoring Releases of Airborne Radioactive Substances from the Stacks and Ducts of Nuclear Facilities."

9.3.2-10 ASME B31.1, Power Piping.

9.3.2-11 EPRI TR-1008192, "BWRVIP-130: BWR Vessel and Internals Project BWR Water Chemistry Guidelines."

9.3.2-12 GE Nuclear Energy, "Regulatory Relaxation for BWR Post-Accident Sampling Stations (PASS)", NEDO-32991-A, Rev. 0, August 2001.

9.3.2-13 GE Nuclear Energy, "Methods of Estimating Core Damage in BWRs", NEDO-33045P, Rev. 0, July 2001.

9.3.3 Equipment and Floor Drain System

The Equipment and Floor Drain System (EFDS) consists of the Clean (nonradioactive) Drain Subsystem and the following five potentially contaminated subsystems:

- Low Conductivity Waste (LCW) Drain Subsystem;
- High Conductivity Waste (HCW) Drain Subsystem;
- Detergent Drain Subsystem;

- Chemical Waste Drain Subsystem; and
- Reactor Component Cooling Water System (RCCWS) Drain Subsystem.

These five subsystems collect liquid drainage from various plant areas and transfer them to the radwaste system.

9.3.3.1 Design Bases

Safety Design Bases

The EFDS does not perform any safety-related function. Therefore, EFDS has no safety design basis, other than provision for safety-related containment penetrations and containment isolation valves, as described in Subsection 6.2.4.

The EFDS meets GDC 2, by compliance with Regulatory Guide 1.29. The applicable sections of RG 1.29 include Position C.1 for safety-related portions and Position C.2 for nonsafety-related portions. The seismic and quality group classifications are identified in Table 3.2-1.

The EFDS meets GDC 4 related to environmental conditions. The EFDS design is not susceptible to external flooding that could result in adverse effects to safety-related SSCs.

The EFDS meets requirements of GDC 60 by providing a design to avoid the transfer of contaminated fluids to a non-contaminated drainage system for disposal.

Power Generation Design Bases

The EFDS collects waste liquids from their point of origin and transfers them to a suitable processing or disposal system.

Drainage systems are designed to accommodate the maximum anticipated normal volumes of liquid without overflowing including such inputs as the anticipated water flow from a fire hose and other fire suppression water discharges to the area floor drains without impacting the safety function of any safety-related component or system. However, as delineated in Subsection 3.4.1.3, no credit is taken for the drainage system in the flooding analysis.

To preclude inadvertent transfer of radioactive liquids to non-radioactive systems, the radioactively contaminated or potentially contaminated liquids are collected by completely separate systems (e.g. no cross connections) from those that collect non-radioactive liquids.

Redundant sump pumps are included to increase the reliability, availability, and maintainability of the EFDS.

Systems are designed and arranged to minimize flooding of multiple compartments.

9.3.3.2 System Description

Summary Description

The EFDS includes sumps, motor-driven pumps, isolation valves, and instrumentation for pump operation, and interconnecting piping. Separate subsystems collect clean (nonradioactive) drains, low conductivity waste (LCW) drains, high conductivity waste (HCW) drains, detergent drains, chemical, and RCCWS drain wastes.

The Clean Drain Subsystem collects and transfers liquid wastes by gravity from the clean nonradioactive equipment and floor drains to sumps, and then pumps these wastes to an appropriate disposal system.

The LCW Drain Subsystem collects liquid wastes from equipment drains in potentially contaminated systems. These liquids gravity drain to sumps located in the drywell and other areas. The drywell LCW drain, which is monitored for activity, is pumped to the LCW collection tank. The drywell LCW sump pump discharge line is provided with redundant containment isolation valves. The liquid wastes collected in the LCW sumps are also pumped to the LCW collection tank.

The HCW Drain Subsystem collects liquid wastes from floor drains in potentially contaminated areas. These liquids gravity drain to sumps located in the drywell and other areas. The drywell HCW drain, which is monitored for activity, is pumped to the HCW collection tank. The drywell HCW sump pump discharge line is provided with redundant containment isolation valves. Liquids collected in the HCW sumps are also pumped to the HCW collection tank.

The Detergent Drain Subsystem collects potentially contaminated wastes from the personnel decontamination stations, laundry, and shower facility drains and transfers them to the detergent drain collection tank.

The Chemical Waste Drain Subsystem collects liquid wastes containing potentially contaminated chemicals and corrosive substances from washdown areas, laboratory drains, hot maintenance shop, and other miscellaneous sources in the plant. These liquid wastes are transferred to the chemical drain collection tank.

Dedicated sumps in the EFDS collect vent and drain water from the closed loop RCCWS and direct the water to the RB Cooling Water Drain Subsystem. The size of this subsystem accommodates the draining of the largest isolable cooling water pipe segment in the RB. The sump contents are evaluated for radioactivity and water quality. If the cooling water is radioactively contaminated, it is directed to the LWMS, where it can be processed. If not, the cooling water may be recycled through a line tied back to the cooling water system.

Safety divisions are provided with a separate drain line connecting to the main drainage piping and leading to an appropriate sump in both the RB and CB. Each drain line is provided with a normally closed manual valve, closed to prevent flooding of multiple safety divisions due to backflow. Watertight walls, floors, and doors on safety-related compartments also prevent flooding of multiple safety-related compartments.

The results of the flooding analysis are acceptable assuming the floodwater is retained in localized areas or zones, which is conservative in the determination of the resulting water level of these specific areas. The flooding analysis shows that the watertight doors and drain line isolation valves are not required to protect the safety-related equipment. They are included to provide additional protection and to minimize the spread of floodwater.

Detailed System Description

The system includes the major equipment listed in Table 9.3-2.

The EFDS equipment is primarily located in the areas where the drains are collected. Capability is provided to sample the liquids collected in each sump.

Containment isolation valves and piping are classified as safety-related. All other EFDS equipment and components are nonsafety-related.

The EFDS interfaces with numerous systems from which drains are collected. The collected liquids are discharged to the Clean Waste Drain subsystem or the Liquid Waste Management System, as appropriate.

Ventilation system Air Handling Unit (AHU) cooling coil condensate, collected in drain pans within the AHU, is routed to a floor drain where it connects to the applicable EFDS subsystem depending upon the building, the air conditioning and ventilation subsystem, and type of system (once-through or recirculation).

System Operation

Liquid wastes drain by gravity from various floors and equipment drains to the appropriate sumps. Each sump has two pumps. One pump operates as required and the other is in standby. The lead sump pump starts automatically when the liquid reaches a predetermined level in the sump and stops at a predetermined low level. Both pumps operate simultaneously if one pump cannot accommodate the rate of accumulation of liquids in the sump. Contaminated or potentially contaminated liquids are transferred to the Liquid Waste Management System for processing. Drywell sumps transfer collected liquids by pumping to the LCW or HCW collection tanks in the RW.

9.3.3.3 Safety Evaluation

The EFDS does not have any safety-related function, other than containment isolation functions.

Subsection 6.2.4 provides details of containment isolation functions.

Containment isolation functions are protected against internally and externally generated missiles and the postulated effects of high and moderate-energy line breaks as defined in Sections 3.5 and 3.6 respectively.

Failure of the EFDS does not prevent safety-related equipment from performing their safety-related functions. Section 3.4, Water Level (Flood) Design, presents analyses demonstrating that safety-related equipment in areas drained by the EFDS is not affected by drain or flood water backing up in the drainage system because of malfunction of active components, blockage, or the probable maximum flood.

9.3.3.4 Testing and Inspection Requirements

The EFDS is designed to permit periodic inspection and testing of important components, such as valves, motor operators, and piping, to verify their integrity and capability. Equipment layout provides easy access for inspection and maintenance.

Drainage piping is hydrostatically tested prior to embedment in concrete. Potentially radioactive drainage piping is pressure tested in accordance with ASME B31.1. The EFDS functionality is demonstrated by continuous use during normal plant operation.

9.3.3.5 Instrumentation Requirements

Instrumentation and controls for the EFDS are located at local panels, and appropriate signals are duplicated and sent to the MCR. These indications and controls include the following:

- On/off switches for pumps;
- Sump level alarms; and
- Valve position indicators and controls.

The EFDS can be controlled manually or can be automatically operated as described below.

High- level and low- level signals on each sump start and stop the sump pump automatically. A separate high-high level signal starts the second sump pump and actuates an alarm in the MCR.

Leaks in the drywell are detected by monitoring the rate of increase of the sump level. This function is provided by the Leak Detection and Isolation System as described in Subsection 5.2.5. Leak detection in other areas is accomplished by monitoring the frequency and duration of sump pump operation.

9.3.3.6 COL Information

None.

9.3.3.7 References

9.3.3-1 NRC RG 1.29, Seismic Design Classification

9.3.3-2 ASME B31.1, Power Piping

9.3.4 Chemical and Volume Control System

Not applicable to ESBWR.

9.3.5 Standby Liquid Control System

9.3.5.1 Design Bases

Safety Design Bases

The Standby Liquid Control (SLC) system performs safety-related functions; therefore it is classified as safety-related and is designed as a Seismic Category I system. The SLC system meets the following safety design bases:

The SLC system provides a diverse backup capability for reactor shutdown that is independent of normal reactor shutdown provisions.

The SLC system provides makeup water to the RPV to mitigate the consequences of a LOCA. The sodium pentaborate in the SLC solution is also credited for buffering to ensure the iodine chemical distribution assumed in the LOCA dose consequence analysis remains valid (Section 15.4).

The SLC system has full capacity for reducing core reactivity between the steady-state rated operating condition of the reactor with voids and the reactor cold shutdown condition, including

shutdown margin. This ensures complete shutdown from the most reactive conditions at any time in core life.

The time required for actuation and effectiveness of the SLC system is consistent with the nuclear reactivity rate-of-change corresponding to the normal reactor rate of cooldown and depressurization and the accompanying influence of xenon decay. A fast scram of the reactor or operational control of fast reactivity transients is not specified for the SLC system.

Means are provided to ensure the capability of the SLC system to respond to an initiation demand by confirming adequate accumulator pressure and solution level, and by initiating circuit continuity and proper valve positions. Additional measures can be taken during plant shutdown to confirm injection valve operability through in-position or in-laboratory firing tests. Provisions are made to confirm an absence of obstructions in the flow path, and to confirm adequacy of the solution concentration during plant operation.

The SLC system injects a boron solution, which performs as a neutron absorber, at multiple locations into the core bypass region at high velocity. This ensures adequate mixing and total injection of the solution to accomplish reactor shutdown. The injection geometry ensures balancing of reaction forces.

The SLC system is reliable to a degree consistent with its role. The potential for unintentional or accidental shutdown of the reactor by this system is minimized.

Power Generation Design Bases

None.

9.3.5.2 System Description

Summary Description

The SLC system (Figure 9.3-1) is manually initiated for its shutdown function described in Subsection 9.3.5.1. In addition, the system is automatically initiated for ATWS and LOCA events. The SLC system process conditions are shown in Figure 9.3-1a.

Detailed System Description

The SLC system contains two identical and separate trains. Each train provides 50% injection capacity. All components of the SLC system in contact with the boron solution are constructed of, or lined with, stainless steel. The safety-related portions of the SLC system are listed in Table 9.3-3. The SLC system requires support from the safety-related interfaces listed in Table 9.3-4.

The SLC system also includes a nitrogen charging subsystem that consists of a liquid nitrogen tank, a vaporizer, a high-pressure pump, and associated valves and piping. This subsystem is used for initial accumulator charging and makeup for the normal system losses during normal plant operations. It is a nonsafety-related subsystem, but has safety-related piping and valves, inside the RB, from the makeup valves downstream to the accumulators. The nonsafety-related high-pressure cryogenic nitrogen equipment is located outside the RB at grade elevation.

The core bypass spargers are located within the reactor vessel and penetrate through shroud into the core. Detail regarding the core bypass spargers is contained in Table 9.3-4. The portions of the SLC injection line downstream of each squib valve contain only stagnant reactor water.

The major components of the SLC system, which are necessary for injection of sodium pentaborate solution (neutron absorber) into the reactor, are located within the RB. Reactor Building HVAC controls the temperature and humidity conditions in the SLC equipment rooms to prevent solute precipitation in the accumulators and injection lines, thereby ensuring proper system operation. This system readiness function is nonsafety-related.

Electrical heating of the accumulator tank and the injection line is not necessary, because the saturation temperature of the boron solution is less than 15.5°C (60°F) and the equipment room temperature is maintained above that value at all times when SLC is required to be operable. During an injection, adiabatic expansion of the cover gas in the accumulators can lead to temperatures less than the saturation temperature of the boron solution. However, the low rate of heat transfer between the cover gas and the solution and the rapid rate of injection of the solution ensure that neither precipitation nor freezing affect the solution injection process or its effectiveness.

System Operation

The SLC system can be manually initiated from the MCR to inject a boron solution into the reactor if the operator determines the reactor cannot be shutdown or kept shutdown using the control rods.

Manual initiation is implemented through the Anticipated Transient Without Scram/Standby Liquid Control (ATWS/SLC) logic processor. The method of manual initiation will involve multiple, deliberate operator actions to prevent inadvertent boron injection. Procedural controls govern manual initiation of the SLC system.

The SLC system is needed in the improbable event that a normal shutdown using control rods cannot be accomplished. The SLC system is required to shut the reactor down and keeps the reactor from going critical again during cooldown.

As part of the Emergency Core Cooling System (ECCS), the SLC system is also designed to provide makeup water to the RPV during a LOCA event by injecting the boron solution from both accumulators. The boron solution is also credited for buffering the RPV coolant such that dissolved iodine does not re-evolve into the containment atmosphere. By providing core cooling following a LOCA, the SLC system and the rest of the ECCS, in conjunction with the containment, limits the release of radioactive materials to the environment.

The performance requirements of the SLC system are bounded by the ATWS event performance requirements shown in Table 9.3-5. For ATWS events, the failure of control rods to insert in response to a valid trip demand is assumed. ATWS mitigation logic is provided to initiate the SLC system if the Startup Range Neutron Monitor (SRNM) power permissive exists (setpoint ≥ 6%) and one of the following conditions persists for at least three minutes:

- High reactor dome gauge pressure of ≥ 7.76 MPa (≥ 1125 psig); or
- Low reactor vessel water level (≤ Level 2).

There is a three-minute time delay that provides sufficient time for completion of the other ATWS mitigation functions of Alternate Rod Insertion (ARI) and FMCRD motor-driven run-in to shut the reactor down, thereby preventing the unnecessary injection of the boron solution. The

SLC system may also be initiated manually for ATWS mitigation (which is described in Section 7.8).

The initial volume of sodium pentaborate solution that injects into the reactor against elevated pressure ensures a timely accomplishment of hot shutdown. As the reactor depressurizes, more solution enters from the accumulators into the reactor and ensures that cold shutdown can be achieved with no further occurrence of critical conditions. Refer to Section 15.5 for SLC system performance in the evaluation of ATWS events.

During a LOCA or an ATWS event, at the completion of the boron solution injection, redundant accumulator level measurement instrumentation using 2-out-of-4 logic closes the two redundant injection line shut-off valves, in each train. The closing of these valves prevents the injection of nitrogen from the accumulator into the reactor vessel. In the event of a single shut-off valve failure, the remaining valve is sufficient to prevent the injection of nitrogen into the reactor vessel. An accumulator vent is also provided, which can be operated via control switches in the MCR to release the residual nitrogen.

SLC system leakage can be monitored using the accumulator pressure and level instrumentation, which provide alarms for out-of-tolerance process conditions. Frequent alarms that require boron or nitrogen makeup indicate the possibility of system leakage, and system inspections are performed. Leakage is collected by the SLC system through drains and sent to a stainless steel drum for disposal. In the event of system leakage, or maintenance, the injection line and accumulators are capable of isolation from the reactor and from each other. The various subsystems are capable of isolation from the main system.

9.3.5.3 Safety Evaluation

The SLC system is an alternate reactivity control system that is required to be operable whenever the reactor is critical. The SLC system is also used to provide makeup water during a LOCA.

The redundant injection valves ensure the reliability of the SLC system. Adequate functioning of the system is ensured if one of the two injection valves in each train opens. No other function is required for proper system operation. Addition of nitrogen to recover gas pressure after initial injection is not necessary for adequate functioning of the system

The system is designed to bring the reactor from rated power to a cold shutdown condition at any time in core life. The reactivity compensation provided reduces reactor power from rated to zero and allows cooling of the nuclear system to less than the cold shutdown temperature with the control rods remaining withdrawn in the rated power pattern. These conditions (hot shutdown and cold shutdown) include, where applicable, the reactivity gains that result from complete decay of the rated power xenon. They include the positive reactivity effects from eliminating steam voids, changing water density from hot to cold, reduced Doppler effect in uranium, reducing neutron leakage from boiling to cold, and decreasing control rod worth as the moderator cools.

Cooldown of the nuclear system requires a minimum of several hours to remove the thermal energy stored in the reactor, reactor water, and associated equipment. The limit for the reactor vessel cooldown is 55.6°C/hr (100°F/hr) and the normal operating temperature is approximately 288°C (550°F). Use of the main condenser and the shutdown cooling systems normally requires 10 to 24 hours to decrease the reactor vessel temperature to 20°C (68°F). Although hot

shutdown is the condition of maximum reactivity, cold shutdown condition is associated with the largest total water mass in which the particular shutdown concentration must be established and therefore, this condition determines the total mass of boron solution to be injected.

The minimum uniformly mixed equivalent concentration of natural boron required in the reactor core to provide adequate cold shutdown margin after operation of the SLC system is 760 ppm. Calculation of the minimum quantity of isotopically enriched sodium pentaborate to be injected into the reactor is based on the required 760 ppm equivalent natural boron concentration in the reactor coolant at 20°C (68°F) and on reactor water level conservatively taken at the elevation of the bottom edge of the main steam lines. This result is then increased by a factor of 1.25 to provide a 25% general margin to discount potential non-uniformities of the mixing process within the reactor. This result is then increased by a factor of 1.15 to provide a further margin of 15% to discount potential dilution by the RWCU/SDC System in the shutdown cooling mode. This conservative approach results in an equivalent concentration of approximately 1100 ppm of natural boron to be injected into the reactor core to achieve cold shutdown. This concentration at hot shutdown is approximately 1600 ppm due to the volume of water.

The extremely rapid initial rate of isotopically enriched boron injection ensures that hot shutdown boron concentration is achieved within several minutes of SLC system initiation based on initial reactor water inventory. Maintaining normal water level with the voids collapsed causes some dilution of this concentration but does not cause hot shutdown concentrations to be violated. As the reactor cools and begins to depressurize, completion of all boron solution injection occurs long before cold shutdown conditions are reached. The high injection velocity from the core bypass spargers and the natural circulation flow within the reactor vessel ensures efficient mixing and distribution of the boron throughout the reactor vessel.

The SLC system is designed to conform with the requirements for equivalent reactivity control capacity specified in 10 CFR 50.62(c)(4).

The SLC system equipment is safety-related for injection of boron solution into the reactor, and is designed as Seismic Category I for withstanding the specified earthquake loadings (refer to Section 3.7). The system piping and equipment are designed, installed, and tested in accordance with the requirements stated in Section 3.9.

The safe shutdown functions of the SLC system are powered from the Safety-Related 120 VAC electrical systems through the four divisions of Safety-Related Distributed Control Information System (Q-DCIS). Environmental conditions to prevent precipitation of solute do not require operation of the RB HVAC systems during the time that SLC operation is required.

The initial accumulator tank inventory of compressed nitrogen is adequate to ensure full injection of the boron solution inventory at a reactor pressure of 6.9 MPa (1000 psia). After the boron injection is complete, the redundant shut-off valves close to prevent the injection of nitrogen into the reactor vessel. A single shut-off valve is sufficient to prevent nitrogen from entering the reactor vessel. Protection against inadvertent premature operation of the shut-off valve is ensured by use of redundancy in the initiation signal for this function .

The SLC system is evaluated against the applicable General Design Criteria (GDC) as follows:

The SLC system is designed to conform to the GDC of 10 CFR 50. The overall requirements of GDC 2 and GDC 4 are applicable to the system, and the system equipment has been designed

and installed in conformance with the presentations in Chapter 3. For its function to provide makeup water to the RPV during a LOCA, the SLC system is designed to meet the requirements of GDC 17, 35, 36 and 37 and 10 CFR 50.46 in conjunction with the other ECCSs. Conformance to these criteria is discussed in Section 6.3, Emergency Core Cooling Systems. Other related GDCs are presented individually below:

Criterion 4, Environmental and Dynamic Effects Design Bases: Due to its location inside the RB, within its own compartment, the SLC system is protected from internally and externally generated missiles. The system piping is routed and analyzed, so that an appropriate distance is provided between it and other high-energy piping. To prevent, or mitigate the dynamic effects of the discharging fluid (i.e. water hammer), the injection line is designed with proper venting. The system components are qualified for the range of environmental conditions postulated for their location.

Criterion 26, Reactivity Control System Redundancy and Capability: The FMCRD system is the intended means for normal operational control of reactivity. Anticipated operational occurrences initiate the hydraulic scram function and rapidly insert all rods to ensure a safe limit on reactivity changes. These systems are capable of safely accommodating all reactivity changes from the normal power range (including xenon influences) to cold shutdown conditions. The SLC system is redundant to these functions and provides a diverse means for reactor shutdown to ensure the ability to bring and maintain the core to subcritical conditions for the full range of reactor conditions from hot shutdown to cold shutdown.

Criterion 27, Combined Reactivity Control Systems Capability: Operation of the SLC system is not required to meet the intent of this criterion. The system can, for many conditions exceeding the design basis of the plant, provide additional reactor shutdown capability to ensure achieving shutdown conditions.

Criterion 28, Reactivity Limits: This criterion applies only to the reactivity control systems intended for normal operation.

The SLC system is evaluated against the applicable RGs as follows:

Regulatory Guide 1.26, Quality Group Classifications and Standards: Because the SLC system is an ECCS, all mechanical components required for boron injection are at least Quality Group B. Those portions that are part of the reactor coolant pressure boundary are Quality Group A.

Regulatory Guide 1.29, Seismic Design Classification: All components of the SLC system necessary for injection of the boron solution into the reactor are Seismic Category I.

SRP Branch Technical Positions SPLB 3-1 and 3-4: Because the SLC system is located within its own compartment in the RB, it is adequately protected from flooding, tornadoes, and internally/externally generated missiles. The SLC system equipment is protected from pipe break by providing adequate distance between the Seismic Category I and non-seismic SLC equipment, where such protection is necessary. In addition, appropriate distance is provided between the SLC system and other high-energy piping systems. This system is

used in ATWS events discussed in Section 15.5. The ATWS events are extremely low probability postulated events.

9.3.5.4 Testing and Inspection Requirements

The SLC system requires firing of only one of two squib valves in each train and no dynamic equipment for operation under design conditions. Critical parameter alarms and periodic surveillances ensure that design conditions are maintained.

Critical parameters (accumulator level and pressure) are alarmed and recorded in the MCR.

Valves, including the injection valves, shut-off valves, vent valves, and relief valves, are periodically tested to ensure operability.

The SLC system preoperational test to demonstrate adequate system performance is described in Subsection 14.2.8.

The pyrotechnic charges in the injection line squib valves are replaced periodically during plant shutdowns. Replacement is done without any opening of the reactor coolant pressure boundary (RCPB). Subsequently in the laboratory, the removed charges are tested to confirm end-of-life capability to function upon demand.

Access for charging each accumulator with boron solution, draining the accumulator, and sampling from each accumulator is provided. Fill-and-drain and makeup operations are intended to be very infrequent operations (several year intervals). Periodic samples are taken to ensure acceptable solution characteristics. Provision is made for a minimum of eight sample withdrawals without a requirement for makeup. Initial charging of the solution inventory is performed with the accumulator depressurized. Sampling and makeup of the solution inventory can be performed with the accumulator at full pressure.

9.3.5.5 Instrumentation Requirements

The instrumentation and control system for the SLC system is designed to allow the injection of liquid poison into the reactor and to ensure that the liquid poison solution and its cover gas are maintained within the allowable range of initial conditions to achieve full solution injection upon demand.

Because of the passive nature of the system and its short operating time, no provision is made for flow measurement. Injection status is provided by MCR indication of accumulator pressure and accumulator solution level for each train. These parameters are direct and independent indicators of injection quantity, given normal operation of the system. Because of the high rate of injection by this system, verification of injection is almost immediately available (< 30 sec) by observation of accumulator level. The verification can be confirmed by observation of accumulator pressure, which is also a direct measure of injection under conditions of normal, unfaulted system operation.

Closure of the redundant injection shut-off valves is automatically initiated by the accumulator level instrumentation using 2-out-of-4 logic. If necessary, the closure signal can be overridden after the shut-off valves have been closed. Closure of the shut-off valves can also be initiated manually from the MCR. Operation of the accumulator vent system is manual from the MCR. Operation of the accumulator nitrogen charging, and makeup to accommodate small losses is

manual. MCR alarms are provided for high, low, and low-low conditions of accumulator pressure and low and low-low conditions of accumulator solution level. At low-level conditions, the nitrogen and poison solution makeup systems are manually started. Accumulator temperature, solution level, and accumulator pressure instrumentation are provided locally inside the accumulator room. Temperatures of the SLC system rooms are monitored and alarmed.

The status of injection and shut-off valves vital to the operation of the system is provided in the MCR.

A further discussion of the SLC system instrumentation may be found in Section 7.4.

9.3.5.6 COL Information

None

9.3.5.7 References

None

9.3.6 Instrument Air System

9.3.6.1 Design Bases

Safety Design Bases

The Instrument Air System (IAS) is a nonsafety-related system and has no safety design basis.

The IAS is a nonsafety-related system and meets the requirements of GDC 1 as it pertains to minimum instrument air quality standards by meeting Instrument Society of America 7.0.01. The IAS also meets the requirements of GDC 1 as it pertains to the guidance of RG 1.68.3, related to preoperational testing of instrument air.

The IAS meets the requirements of GDC 2 as it pertains to Position C.2 of RG 1.29 for nonsafety-related systems. The failure of the IAS does not impact any safety-related structures and will not degrade a safety-related system to an unacceptable safety level.

The IAS meets GDC 5 for shared systems and components important to safety. The IAS design does not share any SSC with any other unit.

The requirements of RG 1.155 are met by providing a design to shut down safely without reliance on offsite or diesel-generator-derived AC power for 72 hours, which exceeds station blackout requirements.

Power Generation Design Bases

The function of the IAS is to provide dry, oil free, filtered compressed air to pneumatically operated valve operators, instrumentation, equipment and components.

The IAS is designed with sufficient capacity to operate during normal plant operation, transients, plant startup, and plant shutdown.

Design of the system ensures that failure of the IAS does not compromise any safety-related system or component nor does it prevent a safe shutdown. Pneumatically operated devices are

designed fail-safe and do not require continuous air supply under emergency or abnormal conditions.

9.3.6.2 System Description

The IAS makes use of the Service Air System (SAS) compressors to provide filtered, dry and oil-free compressed air for plant instrumentation, control systems and pneumatic valve/damper actuators located outside of the containment during normal operation. During refueling operations, the IAS supplies compressed air to the High Pressure Nitrogen Supply System (HPNSS) loads inside containment via the HPNSS piping. The IAS is shown in Figure 9.3-3.

The IAS consists of two identical 100% capacity trains in parallel, one normally operating and the other in standby. Components of the IAS are designed to meet ASME Boiler and Pressure Vessel Code, Section VIII, Division 1, ASME Power Piping Code B31.1, or ASME Process Piping Code B31.3, as applicable.

During normal operation, one SAS compressor is selected for continuous operation, while another serves as standby and starts automatically if the continuously operating compressor cannot meet system demand. The operating compressor automatically loads or unloads (or varies speed) in response to the air system demand as determined by pressure changes in the instrument air header.

The IAS is automatically switched to the standby AC power source during a LOPP and is backed up by the Service Air System receivers during a loss of all compressors upon receipt of a low system pressure signal. The SAS compressor units are powered from plant investment protection (PIP) buses A or B.

The SAS compressors provide compressed air to the IAS via two (2) air receivers. Air, leaving the SAS air receivers, passes through one of two parallel instrument air filtering and drying trains and an IAS receiver tank before being distributed to the IAS piping. Each IAS train is equipped with an air receiver, redundant prefilters, a regenerative desiccant dryer, and redundant after-filter. Both IAS trains are connected to a common header, which distributes to the RW, Turbine Building, FB, CB and RB.

Performance Requirements for the IAS are provided in Table 9.3-6.

9.3.6.3 Safety Evaluation

The IAS is not a safety-related system, however, the IAS incorporates features that ensure its operation over the full range of normal plant operations. If IAS pressure falls below a desired limit, air to the SAS loads is automatically isolated. Four air receivers are provided to maintain air supply pressure if all SAS compressors fail.

9.3.6.4 Inspection and Testing Requirements

IAS functionality is demonstrated by use during normal plant operation. Air receivers, prefilters, air dryers, after-filters, and the control panel are shop inspected and tested. System operational tests for components normally closed to airflow are performed periodically to ensure system capability and integrity. Air filters are periodically inspected for cleanliness, and the desiccant in the air dryers is periodically sampled to verify its useful life. Periodic testing of air quality is performed to ensure compliance with Instrument Society of America Standard 7.0.01.

Pneumatic isolation valves are capable of operational integrity testing. A remote manual switch and open/closed position lights are provided in the MCR for verification of proper valve operation.

Additional testing details of IAS, including preoperational testing in accordance with RG 1.68.3, are described in Subsection 14.2.8.1.19.

9.3.6.5 Instrumentation Application

Instrumentation for the IAS is primarily local, consisting of pressure, differential pressure and temperature or control. Pressure transmitters and pressure switches provide MCR pressure indications and alarms. The system is maintained at constant pressure, with local pressure reduction provided as required.

Pressure-reducing valves are used for services requiring less pressure than the respective receiver tank pressure.

This instrumentation conforms to GDC 13. Refer to Subsection 3.1.2.4 for a general discussion of the GDC.

9.3.6.6 COL Information

None

9.3.6.7 References

9.3.6-1 RG 1.155, Station Blackout.

9.3.6-2 RG 1.68.3, Preoperational Testing of Instrument and Control Air Systems

9.3.6-3 Instrument Society of America Standard 7.0.01, Quality Standard for Instrument Air

9.3.6-4 ASME Boiler and Pressure Vessel Code (BPVC), Section VIII – Pressure Vessels

9.3.6-5 ASME B31.1, Power Piping

9.3.6-6 ASME B31.3, Process Piping

9.3.7 Service Air System

9.3.7.1 Design Bases

Safety Design Bases

The Service Air System (SAS) is a nonsafety-related system and has no safety design basis, other than provisions for safety-related containment penetrations and isolation valves, as described in Subsection 6.2.4. The containment penetration portion is designed to ASME Section III, Class 2, Seismic Category I.

The SAS meets the requirements of GDC 1 as it relates to air quality standards or operational testing of the Instrument Air System (IAS) by providing an interconnection to IAS. See Subsection 9.3.6.1.

The SAS meets GDC 2, by compliance with RG 1.29. The applicable sections of RG 1.29 include Position C.1 for safety-related portions and Position C.2 for nonsafety-related portions. The seismic and quality group classifications are identified in Table 3.2-1.

The SAS meets GDC 5 for shared systems and components important to safety. The SAS design does not share any SSC with any other unit.

The requirements of RG 1.155 are met by providing a design to shut down safely without reliance on offsite or diesel-generator-derived AC power for 72 hours, which exceeds station blackout requirements.

Power Generation Design Bases

The SAS is designed to provide oil-free, filtered, compressed air to the IAS and for general plant use via service air outlets.

The SAS receivers provide a backup air supply to the IAS receivers.

The SAS is designed with redundant active components.

The SAS has sufficient capacity to support plant operations during normal, transient, startup, and shutdown conditions.

The design ensures that failure of the SAS does not compromise the safety-related function of any safety-related system or component or prevent a safe shutdown.

9.3.7.2 System Description

The SAS provides filtered compressed air for general plant use via service air outlets located outside of the containment and to the IAS. During loss of all air compressors, the SAS receivers can supply compressed air to the IAS loads.

The SAS is shown in Figure 9.3-3.

The SAS is designed to provide compressed air of suitable quality for nonsafety-related functions.

The SAS provides compressed air for tank sparging, filter/demineralizer backwashing, air-operated tools and other services requiring air of lower quality than that provided by the IAS.

The SAS consists of four (4) air compressors capable of supplying two trains in parallel, one normally operating, and the other in standby. Components of the SAS are designed to meet ASME Boiler and Pressure Vessel Code, Sections III and VIII, Division 1, and ASME Power Piping Code B31.1, and ASME Process Piping Code B31.3, as applicable.

During normal operation, one compressor is selected for continuous operation, while another serves as standby and starts automatically if the continuously operating compressor cannot meet system demand. The operating compressor automatically loads or unloads (or varies speed) in response to the air system demand as determined by pressure changes in the instrument air header. The other two (2) compressors are available to be used as standby compressors if one of the other compressors is unavailable.

Each of the compressors takes suction through an air intake filter/silencer. Each compressor train is equipped with an inter-cooler, after-cooler, and moisture separator. There are two

receivers in parallel to provide surge volume and pressure spike dampening. Both air trains are connected to a common header that distributes air to the Electrical Building, RW, Turbine Building, RB, CB, FB, and Instrument Air System. The SAS receivers also serve as a backup to the IAS upon loss of air system pressure due to a loss of all compressors.

The cooling water for after-coolers and compressors is supplied from the Reactor Component Cooling Water System.

The service air compressor units are powered from the two (2) separate PIP buses.

The SAS includes system connections for connecting additional compressor capacity for high-usage periods, if required.

Performance requirements of the SAS are provided in Table 9.3-7.

9.3.7.3 Safety Evaluation

The SAS does not have any safety-related functions, except for containment isolation. The SAS incorporates features to ensure its operation over the full range of normal plant operations. Pneumatic-operated devices are designed to fail-safe and do not require continuous air supply under emergency or abnormal conditions.

9.3.7.4 Inspection and Testing Requirements

The SAS operability is demonstrated by use during normal plant operation. Compressors, inter-coolers, after-coolers, moisture separators, air receivers, and the control panels are shop inspected and tested. System operational tests for components normally closed to airflow are performed periodically to ensure system capability and integrity. Filters are periodically inspected for cleanliness. Additional testing details of SAS are described in Subsection 14.2.8.1.19.

9.3.7.5 Instrumentation Application

Instrumentation for the SAS is primarily local, consisting of pressure, differential pressure and temperature indication or control. Pressure transmitters and pressure switches provide indications and alarms in the MCR. The system is maintained at constant pressure, with local pressure reduction provided as required.

Pressure-reducing valves are used for services requiring less pressure than the respective receiver tank pressure.

This instrumentation conforms to GDC 13. Refer to Subsection 3.1.2.4 for a general discussion of the GDC.

9.3.7.6 COL Information

None

9.3.7.7 References

9.3.7-1 RG 1.29, “Seismic Design Classification.”

9.3.7-2 RG 1.155, “Station Blackout.”

9.3.7-3 ASME Boiler and Pressure Vessel Code (BPVC), Section III – Rules for Construction of Nuclear Power Plant Components

9.3.7-4 ASME Boiler and Pressure Vessel Code (BPVC), Section VIII – Pressure Vessels

9.3.7-5 ASME B31.1, Power Piping

9.3.7-6 ASME B31.3, Process Piping

9.3.7-7 ASME B19.1, Safety Standard for Air Compressor Systems

9.3.8 High Pressure Nitrogen Supply System

9.3.8.1 Design Bases

Safety Design Bases

The High Pressure Nitrogen Supply System (HPNSS) does not perform any safety-related function. Therefore, the HPNSS has no safety design basis other than provision for safety-related containment penetrations and isolation valves, as described in Subsection 6.2.4.

Power Generation Design Bases

The HPNSS distributes nitrogen gas to containment nitrogen users from the Containment Inerting System (CIS). Nitrogen loads include the ADS SRV accumulators, the Isolation Condenser (IC) steam and condensate line isolation valve accumulators and other pneumatically operated valves inside containment.

The HPNSS provides a means for switchover from CIS to nitrogen bottle backup during low CIS supply pressure.

The HPNSS provides a means for manual switchover from the HPNSS supply to the IAS supply to provide an operating gas for HPNSS loads during refueling outages.

No single control or instrumentation failure will prevent the ADS SRVs or IC Isolation Valves from performing their required safety-related function as required. No failure in one branch of the HPNSS prevents the other branch of the HPNSS from performing its function.

No single failure in the High Pressure Nitrogen Supply System nitrogen system can lead to an inadvertant opening of an SRV.

9.3.8.2 System Description

Summary Description

The HPNSS consists of the distribution piping between the CIS and the containment nitrogen users. The HPNSS also provides bottled high-pressure nitrogen gas to the Nuclear Boiler System (NBS) ADS SRV accumulators, IC line isolation valves' accumulators, MSIVs, and other nitrogen loads if the CIS fails to maintain the required nitrogen supply pressure.

All containment nitrogen loads are normally supplied by the CIS. The CIS nitrogen supply line branches into two HPNSS distribution lines. One branch line supplies the low-pressure nitrogen loads (i.e., MSIVs, instruments, and pneumatic-operated valves) while the second branch supplies the high-pressure nitrogen loads (i.e., NBS ADS SRV accumulators and the IC piping isolation valve accumulators).

Detailed System Description

The HPNSS is shown in Figure 9.3-4.

The HPNSS provides the distribution piping from the CIS to the nitrogen loads in the containment. To meet the requirements of the accumulators, a pressure reducing station initially reduces the CIS nitrogen gas pressure. One of the two branch lines distributes high-pressure nitrogen to the accumulators. The remaining branch line incorporates a pressure reducing station to lower the CIS nitrogen supply to the required pressure.

The HPNSS incorporates containment isolation valves where the HPNSS supply lines penetrate the containment. An air-operated isolation valve is located outboard of the containment penetration while a check valve, which also functions as an isolation valve, is provided inboard. The check valve prevents backflow while the isolation valve closes. The containment isolation can be initiated manually from the MCR by closing the outboard isolation valve.

The HPNSS backup consists of two bottle-rack trains in parallel. Each bottle-rack train consists of eight or more bottles, each bottle with a pigtail and station valve, which are piped to a manifold. Each bottle rack manifold interfaces with the nitrogen supply distribution header through an isolation valve. The supply header incorporates a pressure reducing station to depressurize the bottled nitrogen gas to the required supply distribution pressure. The nitrogen bottle racks each have about 8-hour supply for the containment nitrogen loads upon loss of normal CIS supply.

The nonsafety-related piping and valves of the HPNSS are designed to meet ASME Piping Code B31.1. The safety-related portions of valves and piping that provide containment isolation functions are designed to meet ASME Section III, Division 1, NC requirements for Class 2 components.

HPNSS requirements are tabulated in Table 9.3-8.

System Operation

The HPNSS distributes CIS nitrogen supply to the loads in the containment during normal operation. An upstream pressure control valve on each branch modulates the CIS nitrogen supply to provide the required nitrogen supply pressure to the nitrogen loads.

If the CIS fails to maintain the required nitrogen supply pressure, the HPNSS provides uninterrupted nitrogen gas supply from the nitrogen storage bottles. When the nitrogen gas pressure in the main header drops below the set pressure, the manifold isolation valve automatically opens to provide nitrogen gas from the storage bottles to all nitrogen loads.

One bottle rack train and one pressure-reducing station are utilized to maintain design nitrogen supply as required. The nitrogen bottle station valves and manifold isolation valve on one train are kept open, while the standby train bottle station valves and manifold isolation valves are kept closed. Switchover from one bottle rack train to the other is a manual operation.

The HPNSS bottled nitrogen normally remains on standby, through an isolation valve located upstream of the pressure reducing station. During low nitrogen supply pressure in the main supply header, the isolation valve automatically opens to allow nitrogen gas supply from the HPNSS nitrogen bottles to all system loads. The normal CIS supply line is isolated following a set time delay.

Restoration of the HPNSS to the CIS is by manual operation of the isolation valves from the MCR.

9.3.8.3 Safety Evaluation

The HPNSS is not safety-related, and is Seismic Category NS except for the safety-related containment penetrations and associated containment isolation valves and piping. Pneumatic-operated devices are designed for a fail-safe mode and do not require continuous air/nitrogen supply under emergency or abnormal conditions.

9.3.8.4 Inspection and Testing Requirements

The HPNSS is designed such that it can be tested at any time.

Nitrogen isolation valve integrity testing is performed by manual actuation by MCR operators using associated valve position indicating lights.

9.3.8.5 Instrumentation Requirements

The flow of nitrogen gas from the HPNSS bottled nitrogen is automatically initiated when a pressure sensor in the main supply line indicates low nitrogen supply pressure. The pressure switch also alarms in the MCR upon either low or high pressure. The CIS supply isolation valve closes following a time delay.

9.3.8.6 COL Information

None

9.3.8.7 References

None

9.3.9 Hydrogen Water Chemistry System

The ESBWR Standard Plant design includes the capability to connect a Hydrogen Water Chemistry System (HWCS), but the system itself is not part of the ESBWR Standard Plant design.

9.3.9.1 Design Bases

Safety Design Bases

The HWCS is nonsafety-related. Therefore, the HWCS has no safety design basis.

Power Generation Design Basis

Provisions are made to permit installation of a system for adding hydrogen into the feedwater at the suction of the feedwater pumps and oxygen into the offgas system. The HWCS utilizes the guidelines in EPRI report “BWR Hydrogen Water Chemistry Guidelines” (Reference 9.3.9-1).

9.3.9.2 System Description

The conceptual design of the HWCS, illustrated in Figure 9.3-5, is composed of hydrogen and oxygen supply systems to inject hydrogen into the feedwater and oxygen into the offgas and

includes several monitoring systems to track the effectiveness of the HWCS. The conceptual design of the HWCS will be replaced with site-specific design, if applicable.

The COL Applicant will determine if HWCS is to be implemented (COL 9.3.9-1-A).

The hydrogen and oxygen storage facility requirements and appropriate supply system will be provided by the COL Applicant if HWCS is selected to be installed (COL 9.3.9-2-A). The hydrogen supply system may be integrated with the generator hydrogen supply system (as described in Subsection 10.2.2.2.8).

9.3.9.3 Safety Evaluation

The HWCS is not safety-related. However, the HWCS is used, along with other measures, to reduce the likelihood of corrosion failures that would adversely affect plant availability. The means for storing and handling hydrogen utilizes the guidelines in EPRI Report "Guidelines for Permanent BWR Hydrogen Water Chemistry Installations"(Reference 9.3.9-2).

9.3.9.4 Inspection and Testing Requirements

The ESBWR Standard Plant design connections for an optional Hydrogen Water Chemistry System are tested and inspected with the feedwater and offgas piping.

The HWCS is demonstrated functional by its use during normal operation. The system can be tested to ensure functionality based on manufacturer recommendations.

9.3.9.5 Instrumentation and Controls

The necessary instrumentation can be provided to control the injection of hydrogen and augment the injection of oxygen. Automatic control features in the HWCS minimize the need for operator attention and improves performance.

9.3.9.6 COL Information

9.3.9-1-A Implementation of Hydrogen Water Chemistry

The COL Applicant will determine if HWCS is to be implemented (Subsection 9.3.9.2).

9.3.9-2 -A Hydrogen and Oxygen Storage and Supply

The hydrogen and oxygen storage facility requirements and appropriate supply system will be provided by the COL Applicant if HWCS is selected to be installed (Subsection 9.3.9.2).

9.3.9.7 References

9.3.9-1 Electric Power Research Institute, "BWR Hydrogen Water Chemistry Guidelines," EPRI Report NP-4947-SR.

9.3.9-2 Electric Power Research Institute, "Guidelines for Permanent BWR Hydrogen Water Chemistry Installations," EPRI Report NP-5283-SR-A.

9.3.10 Oxygen Injection System

9.3.10.1 Design Bases

Safety Design Bases

The Oxygen Injection System (OIS) does not perform any safety-related function. Therefore, the OIS has no safety design basis.

Power Generation Design Bases

The OIS is designed to add sufficient oxygen to the condensate system to suppress corrosion and corrosion product release in the Condensate and Feedwater System. Experience has shown that the preferred feedwater dissolved oxygen concentration is 30 to 200 ppb. During startup and shutdown operation, the feedwater dissolved oxygen concentration is usually greater than the 30 to 200 ppb range. However, during power operation, deaeration in the main condenser can reduce the condensate dissolved oxygen concentration below 30 ppb, requiring that oxygen be added. The main function of the Oxygen Injection System is to maintain the dissolved oxygen concentration in the condensate and feedwater between 30 and 200 ppb with a target of less than 100 ppb during reactor operation.

The OIS is also designed to inject oxygen into the offgas system when Hydrogen Water Chemistry is implemented, to ensure that excess hydrogen in the offgas stream is recombined.

9.3.10.2 System Description

The Oxygen Injection System uses the guidelines for gaseous oxygen injection systems in Electric Power Research (EPRI) Report NP-5283-SR-A, "Guidelines for Permanent Hydrogen Water Chemistry Installations 1987 Revision" (Reference 9.3.10-1). The condensate oxygen injection module and the feedwater injection module are provided with pressure regulators and associated piping, valves, and controls to depressurize the gaseous oxygen and route it to the condensate and feedwater injection modules. There are check valves and isolation valves between the oxygen injection modules and the condensate lines, downstream of the condensate demineralizers, and in the feedwater lines, downstream of the direct contact feedwater heater.

The flow regulating valves in this system are operated from the MCR. Analyzers in the Process Sampling System (Subsection 9.3.2) monitor the dissolved oxygen concentration in the condensate and feedwater system. An operator can make changes in the oxygen injection rate in response to changes in the dissolved oxygen concentration in the condensate and feedwater systems. An automatic control system is not required because short-term changes in oxygen injection rate are not required.

The Hydrogen Water Chemistry oxygen injection module is based on the generic EPRI NP-5283-SR – A, "Guidelines for Permanent BWR Hydrogen Water Chemistry Installations 1987 Revision" (Reference 9.3.10-1).

The COL Applicant will provide a description of the oxygen storage facility (COL 9.3.10-1-A).

9.3.10.3 Safety Evaluation

The oxygen injection system is not safety-related. The oxygen storage facility is located in an area where the amount of combustible material is limited through design (permanent combustible

material) and administrative controls (temporary combustibles). Normal safe practices for handling high-pressure gases are followed.

9.3.10.4 Testing and Inspection Requirements

The oxygen injection system is demonstrated functional by its use during normal operation. The system valves can be tested to ensure functionality from the MCR.

9.3.10.5 Instrumentation

The oxygen supply system has monitors that indicate to the operators when re-supply is required. Two flow elements (one for each injection point) indicate the oxygen gas flow rate at all times. The gas flow regulating valves have position indication in the MCR.

9.3.10.6 COL Information

9.3.10-1-A Oxygen Storage Facility

The COL Applicant will provide a description of the oxygen storage facility (Subsection 9.3.10.2).

9.3.10.7 References

9.3.10-1 EPRI NP-5283-SR-A, "Guidelines for Permanent BWR Hydrogen Water Chemistry Installations 1987 Revision."

9.3.10-2 (Deleted)

9.3.11 Zinc Injection System

The ESBWR Standard Plant design includes the capability to connect a Zinc Injection System (ZNIS), but the system itself is not part of the ESBWR Standard Plant design.

9.3.11.1 Design Bases

Safety Design Bases

The ZNIS does not perform any safety-related function. Therefore, the ZNIS has no safety design basis.

Power Generation Design Bases

The ESBWR Standard Plant design includes provisions for connecting an optional Zinc Injection System.

9.3.11.2 System Description

The ESBWR Standard Plant design provisions for connecting an optional Zinc Injection System are: (1) Piping connections for a bypass loop around the feedwater pumps, and (2) Space for ZNIS equipment.

The COL Applicant shall determine if a Zinc Injection System is required to be implemented at startup based on plant configuration and material selection (COL 9.3.11-1-A).

9.3.11.3 Safety Evaluation

The Zinc Injection System is not safety-related, and does not affect the safety function of any safety-related system.

9.3.11.4 Test and Inspections

The ESBWR Standard Plant design connections for an optional Zinc Injection System are tested and inspected with the feedwater piping.

If a Zinc Injection System is to be installed, the COL Applicant shall include necessary information on System Description, Test and Inspection (COL 9.3.11-2-A).

9.3.11.5 Instrumentation and Controls

Instrumentation can be provided to automatically stop the injection of zinc solution if feedwater flow stops. The zinc injection rate can be manually adjusted based on the zinc concentration in the reactor water.

9.3.11.6 COL Information

9.3.11-1-A Determine Need for Zinc Injection System

The COL Applicant shall determine if a Zinc Injection System is required to be implemented at startup based on plant configuration and material selection (Subsection 9.3.11.2).

9.3.11-2-A Provide System Description for Zinc Injection System

If a Zinc Injection System is to be installed, the COL Applicant shall include necessary information on System Description, Test and Inspection (Subsection 9.3.11.4).

9.3.11.7 References

None

9.3.12 Auxiliary Boiler System

9.3.12.1 Design Basis

Safety Design Bases

The Auxiliary Boiler System (ABS) is a nonsafety-related system and has no safety design basis.

Power Generation Design Bases

The ABS supplies steam required by the unit for plant use during startup and shutdown and at any other time when the main steam or turbine gland seal steam (refer to Subsection 10.4.3) is unavailable.

9.3.12.2 System Description

General Description

During plant startup and shutdown and also at normal operation (if required), the ABS provides the necessary non-radioactive steam at the required pressure to the following equipment:

- Steam Jet Air Ejectors to maintain the motive power required to perform a continuous evacuation of the non-condensable gases from the Main Condenser and to the Offgas System
- Turbine Gland Sealing System to allow the Main Condenser to reach vacuum
- The Feedwater System for preheating during plant warm-up
- Preoperational testing of offgas system equipment
- Evaporation of liquid nitrogen for inerting of the Containment

Component Description

The ABS components are located in the Auxiliary Boiler Building. The following components are part of the ABS:

- One (1) 100% packaged firetube Auxiliary Boiler composed of two (2) 50% fuel oil boilers;
- Two (2) complete firing systems including fuel-oil burners and fans;
- Two (2) 100% fuel-oil pumps;
- One (1) 100% Deaerator with integral storage tank;
- Three (3) 50% Auxiliary Boiler Feedwater Pumps;
- One (1) 100% Auxiliary Boiler Blowdown Flash Tank;
- One (1) 100% Steam Separator; and
- Instrumentation and controls.

The Auxiliary Boilers burn fuel oil to boil demineralized water to produce steam during plant startup, shutdown and off-line operation when main steam is unavailable. Auxiliary Boiler Fuel Oil Pumps are provided in the Auxiliary Boiler System to transfer fuel oil from the fuel oil tank to the Auxiliary Boiler. The fuel oil piping is connected to the fuel oil tank by means of a fuel tank nozzle situated above the minimum level required for the Diesel Generator System.

The Makeup Water System provides makeup feedwater to the ABS. A pressure control valve maintains the steam supply pressure while a level control valve regulates Auxiliary Boiler feedwater flow to the boiler. The steam generated by the Auxiliary Boiler passes through the Steam Separator and is then distributed via two supply lines to the auxiliary steam header and to the gland steam supply line in the Turbine Gland Seal System. Each supply line contains an air-operated block valve and check valve for isolation.

The non-radioactive area of the Equipment and Floor Drain System collects drains from the ABS Blowdown Flash Tank.

The ABS has sample connections to monitor boiler water chemistry. Typical boiler water chemistry process sample parameters are provided in Table 9.3-1.

9.3.12.3 Safety Evaluation

The ABS does not perform or ensure any safety-related function and therefore requires no safety evaluation. Failure of the ABS as a result of a pipe break or malfunction of the system will not adversely affect the function or operation of affected safety-related systems due to the fail safe design of the safety-related systems. The safety-related sensors are designed with diversity and defense-in-depth, allowing them to be mounted on or near nonsafety-related systems in the turbine building without the need for physical protection or barriers.

9.3.12.4 Testing and Inspection Requirements

Testing of the ABS is performed prior to initial plant operation. Components of the system are monitored during operation to verify satisfactory performance.

9.3.12.5 Instrumentation

A boiler control system is provided with the Auxiliary Boiler package for automatic control of the Auxiliary Boiler. Features of the control system include automatic shutdown of the Auxiliary Boiler and the Auxiliary Boiler feedwater pumps on an abnormal condition.

The ABS is provided with the necessary controls and indicators for local or remote monitoring and control of the operation of the system.

9.3.12.6 COL Information

None

9.3.12.7 References

None

Table 9.3-1

Process Sampling System Measurements

Sampled System	Typical Process Measurements
Reactor Water Cleanup/Shutdown Cooling System	Continuous - Conductivity, Dissolved Oxygen** Grab - pH**, Chloride**, Silica, Corrosion Product Metals, Gross Activity**, Corrosion Product Activity, Fission Product Activity, Sulfate, I-131**, Total Anions, Organic Impurities
Control Rod Drive System	Continuous - Conductivity, Dissolved Oxygen
Fuel and Auxiliary Pools Cooling System	Continuous - Conductivity**, pH** Grab - Chloride**, Silica, Corrosion Product Metals, Gross Activity, Corrosion Product Activity, Fission Product Activity, I-131, Turbidity, Sulfate, Total Anions, Organic Impurities
Main Steam System*	Grab - Gaseous Fission Products (Xe, Kr)
Condensate and Feedwater System	Continuous - Conductivity, Dissolved Oxygen Grab - Corrosion Product Metals, Iron, Copper, Chloride, Isotopics, Sulfate
Moisture Separator Reheater System	Grab - Iron, Copper
Heater Drain and Vent System	Continuous - Conductivity Grab - Iron, Copper
Generator Cooling System	Grab - Sodium, Chloride, Silica, Iron, Copper
Condensate Purification System	Continuous - Conductivity, Dissolved Oxygen Grab - Chloride, Isotopics, Corrosion Product Metals, Iron, Copper, Sulfate
Main Condenser and Auxiliaries	Continuous - Conductivity or Sodium
Main Condenser Offgas System	Grab – Noble Gas
Auxiliary Boiler System	Grab - pH, Cation Conductivity, Silica, Sodium, Trisodium Phosphate, Sodium Sulfite, Disodium Phosphate

Table 9.3-1

Process Sampling System Measurements (Continued)

Sampled System	Typical Process Measurements
Liquid Radwaste System Effluent Sample Tank	Continuous - Gross Radioactivity Grab - Identification and Concentration of Principal Radionuclide and Alpha Emitters, State and Federal Environmental Discharge Requirement such as pH, Suspended Solids, Oil and Grease, Iron, Copper, Sodium Nitrate
Standby Liquid Control Tank	Grab - Percent weight Sodium Pentaborate

* The main steam sampling is listed as part of the Turbine Building Sample Station, but due to the high pressure, temperature, and radiation involved with a main steam sample, this sample is routed to a separate sample panel.

** These sample parameters are required to be monitored as part of the post-accident sampling program per SRP 9.3.2.

Table 9.3-2

Major Equipment for EFDS

Clean Drain Subsystem		
Reactor Building clean area floor drains (including nonsafety-related electrical areas)		
Sumps	Quantity:	1
	Usable Capacity:	Volume - ≥ 3.25 m^3 (≥ 859 gal)
Pumps	Quantity:	2 - 100% capacity
	Capacity:	Flow – 30.66 m^3/hr (135 gpm) per pump
		Head - 61 m (200 ft) at discharge
	Type:	Sump pump, ≤ 22.37 kW (≤ 30 hp)
CB clean area floor drains		
Sumps	Quantity:	2
	Usable Capacity:	Volume – ≥ 3.25 m^3 (≥ 859 gal)
Pumps	Quantity:	4 - 100% capacity (2 per sump)
	Capacity:	Flow – 30.66 m^3/hr (135 gpm) per pump
		Head – 61 m (200 ft) at discharge
	Type:	Sump pump, ≤ 22.37 kW (≤ 30 hp)
Turbine Building clean area floor drains		
Sumps	Quantity:	3
	Usable Capacity:	Volume – ≥ 3.25 m^3 (≥ 859 gal) each
Pumps	Quantity:	6 - 100% capacity (2 per sump)
	Capacity:	Flow – 30.66 m^3/hr (135 gpm) per pump
		Head – 61 m (200 ft) at discharge
	Type:	Sump pump, ≤ 22.37 kW (≤ 30 hp)

Table 9.3-2
Major Equipment for EFDS (Continued)

Low Conductivity Waste (LCW) Drain Subsystem		
Drywell equipment drains		
Tanks	Quantity:	1
	Usable Capacity:	Volume - ≥ 3.25 m^3 (≥ 859 gal)
Pumps	Quantity:	2 - 100% capacity
	Capacity:	Flow - 30.66 m^3/hr (135 gpm) per pump
		Head – 61 m (200 ft) at discharge
	Type:	Sump pump, ≤ 22.37 kW (≤ 30 hp)
RB equipment drains		
Sumps	Quantity:	2
	Usable Capacity:	Volume - ≥ 3.25 m^3 (≥ 859 gal) each
Pumps	Quantity:	4 - 100% capacity (2 per sump)
	Capacity:	Flow - 30.66 m^3/hr (135 gpm) per pump
		Head - 61 m (200 ft) at discharge
	Type:	Sump pump, ≤ 22.37 kW (≤ 30 hp)
FB equipment drains		
Sumps	Quantity:	1
	Usable Capacity:	Volume - ≥ 3.25 m^3 (≥ 859 gal)
Pumps	Quantity:	2 - 100% capacity (2 per sump)
	Capacity:	Flow – 30.66 m^3/hr (135 gpm) per pump
		Head - 61 m (200 ft) at discharge
	Type:	Sump pump, ≤ 22.37 kW (≤ 30 hp)

Table 9.3-2
Major Equipment for EFDS (Continued)

Turbine Building equipment drains		
Sumps	Quantity:	3
	Usable Capacity:	Volume - ≥ 3.25 m^3 (≥ 859 gal) each
Pumps	Quantity:	6 - 100% capacity (2 per sump)
	Capacity:	Flow – 30.66 m^3/hr (135 gpm) per pump
		Head – 61 m (200 ft) at discharge
	Type:	Sump pump, ≤ 22.37 kW (≤ 30 hp)
RW equipment drains		
Sumps	Quantity:	1
	Usable Capacity:	Volume - ≥ 3.25 m^3 (≥ 859 gal)
Pumps	Quantity:	2 - 100% capacity
	Capacity:	Flow – 30.66 m^3/hr (135 gpm) per pump
		Head – 18 m (60 ft) at discharge
	Type:	Sump pump, ≤ 22.37 kW (≤ 30 hp)
High Conductivity Waste (HCW) Drain Subsystem		
Drywell floor drains		
Sumps	Quantity:	1
	Usable Capacity:	Volume - ≥ 3.25 m^3 (≥ 859 gal)
Pumps	Quantity:	2 - 100% capacity
	Capacity:	Flow – 30.66 m^3/hr (135 gpm) per pump
		Head – 61 m (200 ft) at discharge
	Type:	Sump pump, ≤ 22.37 kW (≤ 30 hp)

Table 9.3-2
Major Equipment for EFDS (Continued)

RB floor drains		
Sumps	Quantity:	2
	Usable Capacity:	Volume - ≥ 3.25 m^3 (≥ 859 gal) each
Pumps	Quantity:	4 - 100% capacity (2 per sump)
	Capacity:	Flow – 30.66 m^3/hr (135 gpm) per pump
		Head - 61 m (200 ft) at discharge
	Type:	Sump pump, ≤ 22.37 kW (≤ 30 hp)
FB floor drains		
Sumps	Quantity:	1
	Usable Capacity:	Volume - ≥ 3.25 m^3 (≥ 859 gal) each
Pumps	Quantity:	2 - 100% capacity (2 per sump)
	Capacity:	Flow – 30.66 m^3/hr (135 gpm) per pump
		Head - 61 m (200 ft) at discharge
	Type:	Sump pump, ≤ 22.37 kW (≤ 30 hp)
Turbine Building floor drains		
Sumps	Quantity:	3
	Usable Capacity:	Volume - ≥ 3.25 m^3 (≥ 859 gal) each
Pumps	Quantity:	6 - 100% capacity (2 per sump)
	Capacity:	Flow – 30.66 m^3/hr (135 gpm) per pump
		Head – 61 m (200 ft) at discharge
	Type:	Sump pump, ≤ 22.37 kW (≤ 30 hp)

Table 9.3-2
Major Equipment for EFDS (Continued)

RW floor drains		
Sumps	Quantity:	1
	Usable Capacity:	Volume - ≥ 3.25 m^3 (≥ 859 gal)
Pumps	Quantity:	2 - 100% capacity
	Capacity:	Flow – 30.66 m^3/hr (135 gpm) per pump
		Head – 18 m (60 ft) at discharge
	Type:	Sump pump, ≤ 22.37 kW (≤ 30 hp)
Detergent Drain Subsystem		
Turbine Building detergent drains		
Sumps	Quantity:	1
	Usable Capacity:	Volume - ≥ 3.25 m^3 (≥ 859 gal)
Pumps	Quantity:	2 - 100% capacity
	Capacity:	Flow - 30.66 m^3/hr (135 gpm) per pump
		Head - 61 m (200 ft) at discharge
	Type:	Sump pump, ≤ 22.37 kW (≤ 30 hp)
RW detergent drains		
Sumps	Quantity:	1
	Usable Capacity:	Volume - ≥ 3.25 m^3 (≥ 859 gal)
Pumps	Quantity:	2 - 100% capacity
	Capacity:	Flow – 30.66 m^3/hr (135 gpm) per pump
		Head – 18 m (60 ft) at discharge
	Type:	Sump pump, ≤ 22.37 kW (≤ 30 hp)

Table 9.3-2
Major Equipment for EFDS (Continued)

Chemical Waste Drain Subsystem		
Turbine Building Chemical waste drains		
Sumps	Quantity:	1
	Usable Capacity:	Volume - ≥ 3.25 m^3 (≥ 859 gal)
Pumps	Quantity:	2 - 100% capacity
	Capacity:	Flow - 30.66 m^3/hr (135 gpm) per pump
		Head - 61 m (200 ft) at discharge
	Type:	Sump pump, ≤ 22.37 kW (≤ 30 hp)
RW Chemical drains		
Sumps	Quantity:	1
	Usable Capacity:	Volume - ≥ 3.25 m^3 (≥ 859 gal)
Pumps	Quantity:	2 - 100% capacity
	Capacity:	Flow – 30.66 m^3/hr (135 gpm) per pump
		Head – 18 m (60 ft) at discharge
	Type:	Sump pump, ≤ 22.37 kW (≤ 30 hp)
Reactor Component Cooling Water Waste Drain Subsystem		
Reactor Component Cooling Water System waste drains		
Sumps	Quantity:	1
	Usable Capacity:	Volume - ≥ 13 m^3 (≥ 3434 gal)
Pumps	Quantity:	2 - 100% capacity
	Capacity:	Flow - 30.66 m^3/hr (135 gpm) per pump
		Head – 61 m (200 ft) at discharge
	Type:	Sump pump, ≤ 22.37 kW (≤ 30 hp)

Table 9.3-3

Safety-Related Portions of the SLC System

- An accumulator tank for each train. Each accumulator contains at least 7.8 m^3 (2061 gal) but not greater than 9.7 m^3 (2562 gal) of 12.5 weight % of sodium pentaborate and demineralized water solution. The boron has an enriched ratio of at least 94% of B^{10} isotope against B^{11}.
- A piping system for nitrogen charging and sparging of the solution with valves, controls, and logic necessary to maintain 14.8 m^3 (523 ft^3) of nitrogen cover gas at a minimum absolute pressure of 14.82 MPa (2150 psia) in the accumulator for each SLC system train.
- A pressure relief line and valve to prevent nitrogen pressure from exceeding the design pressure for each accumulator.
- Vent piping and valves to permit depressurization of each accumulator for access or after completion of solution injection.
- An injection line with valves, controls, and logic to ensure manual or automatic injection, and post-injection closure of the line for each SLC system train. The injection line is constructed of 80 mm (3 in.) stainless steel piping designed for 17.24 MPa (2500 psia) of internal pressure with corresponding ratings for the valves.
- Redundant level instrumentation for each accumulator to ensure adequate solution inventory and to initiate closure of the injection line on completion of solution injection.
- Poison solution piping and valves used for initial charging and any necessary periodic makeup to each accumulator.

Table 9.3-4

Safety-Related Interfaces for the SLC System

- Safety-related 120 VAC power systems.
- Signals for automatic initiation.
- A core bypass sparger system consisting of one reactor vessel penetration per train, one internal injection line per penetration, two distribution manifolds per internal injection line, and four injection nozzles per distribution manifold. Each injection nozzle in the manifolds has two jet-openings angled outwardly from each other. The distribution manifolds are located in the four quadrants of the core bypass region to ensure uniform solution injection.

Table 9.3-5

SLC ATWS Mitigation Function Parameters

Parameter	Value
Initial reactor absolute pressure	≤ 8.61 MPa (1250 psia)
Initial injection flow into the core bypass region (both accumulators)	≥ 0.03 m^3/s (475 gpm)
Average flowrate for the first 5.4 m^3 of the injection into the core bypass region (both accumulators)	≥ 0.02755 m^3/s (436 gpm)
Average flowrate for the second 5.4 m^3 of the injection into the core bypass region (both accumulators)	≥ 0.0167 m^3/s (264 gpm)
Average flowrate for the first and second 5.4 m^3 (design basis total volume of 10.8 m^3) of the injection into the core bypass region (both accumulators)	≥ 0.0208 m^3/s (330 gpm)
Total solution injection volume at the initial reactor absolute pressure (both accumulators)	≥ 10.8 m^3 (2854 gal)
Total solution injection time at the initial reactor absolute pressure (both accumulators)	≤ 519 seconds
Equivalent natural boron concentration for the total solution injection volume, based on a hot shutdown liquid inventory *	≥ 1600 ppm

* Liquid inventory in RPV calculated based on reactor coolant level extending up to main steam line nozzle.

Table 9.3-6

Instrument Air System Requirements

Capacity	
Flow rate:	11.2m^3/min (396 scfm), nominal
Pressure	
System operating, gage:	0.62 to 0.86 MPa (90 to 125 psi)
Maximum system operating, gage:	0.86 MPa (125 psi)
Pressure Dewpoint	
Air dryer outlet:	-40°C (-40°F) nominal
Filtration	
Particle size:	3 microns maximum

Table 9.3-7

Service Air System Requirements

Capacity	
Maximum flow rate (One compressor):	50.5 m^3/min (1782 scfm)
Maximum flow rate (Two compressors):	101 m^3/min (3564 scfm)
Pressure	
Air compressor intake, absolute:	0.1 MPa (14.7 psi)
Air compressor discharge, gage:	0.86 MPa (125psi)
System operating, gage:	0.62 to 0.86 MPa (90 to 125 psi)
Maximum system operating, gage:	0.86 MPa (125 psi)
Temperature	
Air compressor intake:	-23 to 38°C (-10 to 100°F)
After-cooler outlet:	38°C (100°F) maximum
Filtration	
Particle size:	10 micron maximum

Table 9.3-8

High Pressure Nitrogen Supply System Requirements

Nitrogen Demand	
MSIVs and containment instrumentation (intermittent):	9.627 m^3/min (340 scfm)
SRV and ICS (Steam Supply and Condensate Return Lines) Isolation Valves accumulator recharging (intermittent):	10.3 m^3/min (364 scfm)
SRV and ICS Isolation Valves leakage:	4.72E-04 m^3/min (1/60 scfm) each
Bottles (intermittent):	10.3 m^3/min (364 scfm)
Normal (maximum) nitrogen supply from CIS (Continuous):	12.74 m^3/min (450 scfm)
Pressure	
MSIV and other containment instruments supply:	0.86 MPaG (125 psig)
ICS Isolation Valves accumulators supply (minimum):	1.13 MPaG (164 psig)
SRV accumulators (minimum):	2.41 MPaG (350 psig)
Bottle initial fill:	24.82 MPaG (3600 psig)

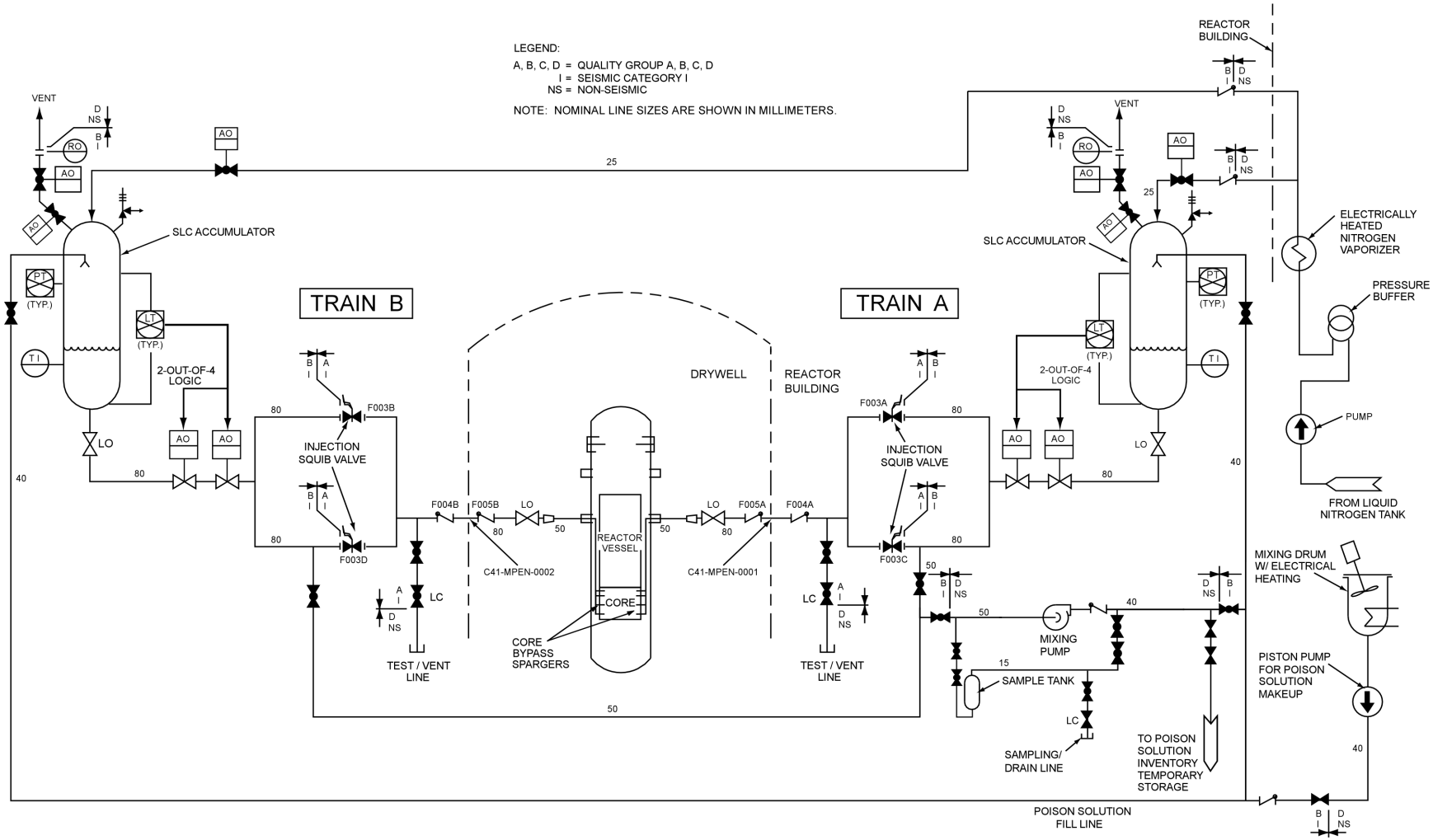

Figure 9.3-1. Standby Liquid Control System Simplified Diagram

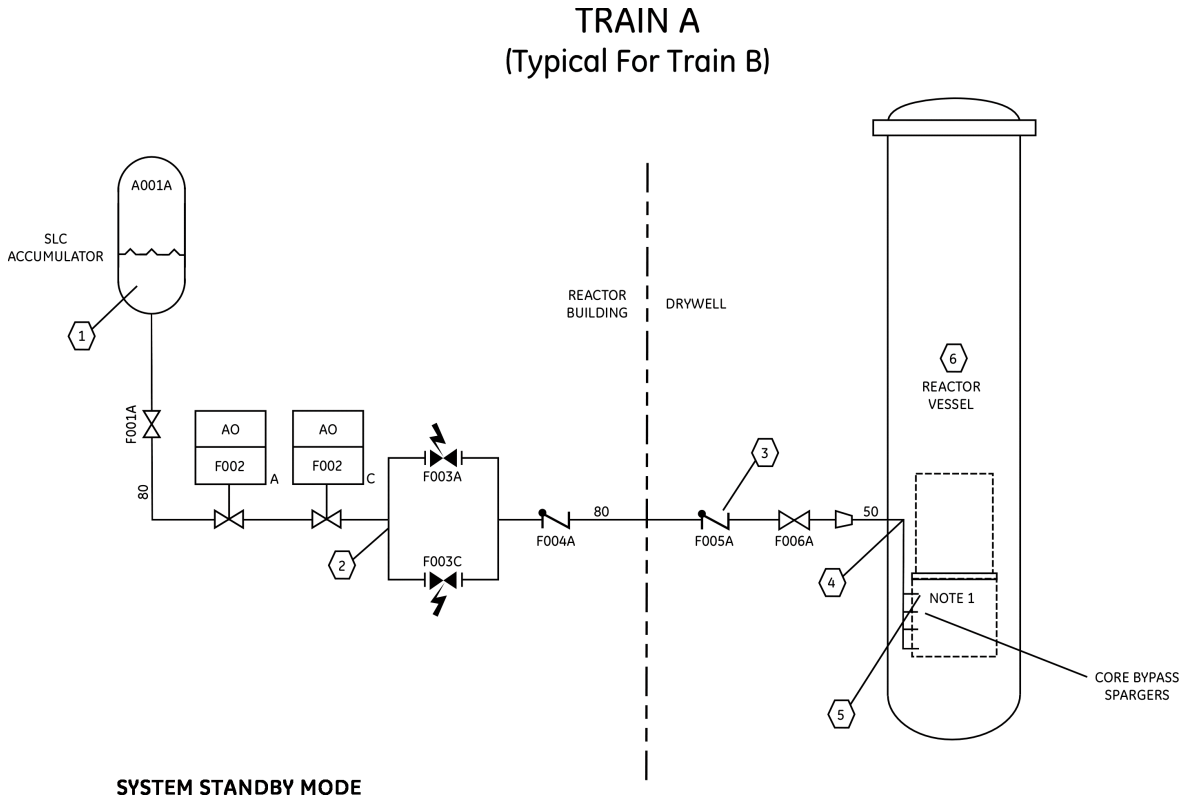

SYSTEM STANDBY MODE

LOCATION	⬡	1	2	3	4	5	6
PRESSURE	MPa Gauge (PSIG)	15.17 (2200)	15.20 (2204)	7.10 (1030)	7.10 (1030)	7.10 (1030)	7.10 (1030)
TEMPERATURE	°C (°F)	18 (65)	18 (65)	18 (65)	278 (533)	278 (533)	278 (533)

INJECTION MODE (RPV-HOT STANDBY)

LOCATION	⬡	1	2	3	4	5 NOTE 4	6
PRESSURE NOTE 3	MPa Gauge (PSIG)	12.1 (1755)	12.0 (1746)	11.9 (1719)	11.5 (1670)	9.6 (1390)	8.63 (1251)
TEMPERATURE	°C (°F)	-2.3 (+27.9)	18 (65)	18 (65)	18 (65)	18 (65)	298 (571)
AVERAGE VELOCITY NOTE 2	M/SEC (FT/SEC)	- -	8.9 (29.3)	8.9 (29.3)	21.5 (70.7)	34.2 (112.5)	- -

NOTES:

1. EACH SLC INJECTION LINE CONNECTS TO A HEADER INSIDE THE REACTOR VESSEL THAT DIRECTS FLOW TO TWO DOWNCOMERS. EACH DOWNCOMER CONNECTS TO FOUR NOZZLES THAT DIRECT FLOW THROUGH THE SHROUD INTO THE CORE BYPASS REGION. THE NOZZLES ARE LOCATED AT FOUR DIFFERENT ELEVATIONS FOR A TOTAL OF EIGHT NOZZLES PER EACH SLC Train.
2. AVERAGE VELOCITY DURING INJECTION OF THE FIRST HALF OF REQUIRED SOLUTION VOLUME.
3. PRESSURE CONDITIONS CORRESPOND TO TIME AT WHICH HALF THE SOLUTION VOLUME HAS BEEN INJECTED.
4. VELOCITY THROUGH A SINGLE NOZZLE HOLE. EACH NOZZLE HAS TWO HOLES.
5. THE INJECTION LINE FROM THE ACCUMULATOR TO THE REACTOR HAS A DESIGN PRESSURE OF 17.24 MPa G (2500 PSIG) AND DESIGN TEMPERATURE OF 60°C (140°F).
6. NOMINAL LINE SIZES ARE SHOWN IN MILLIMETERS.

Figure 9.3-1a. Standby Liquid Control System Simplified Process Flow Diagram

Figure 9.3-2. (Deleted)

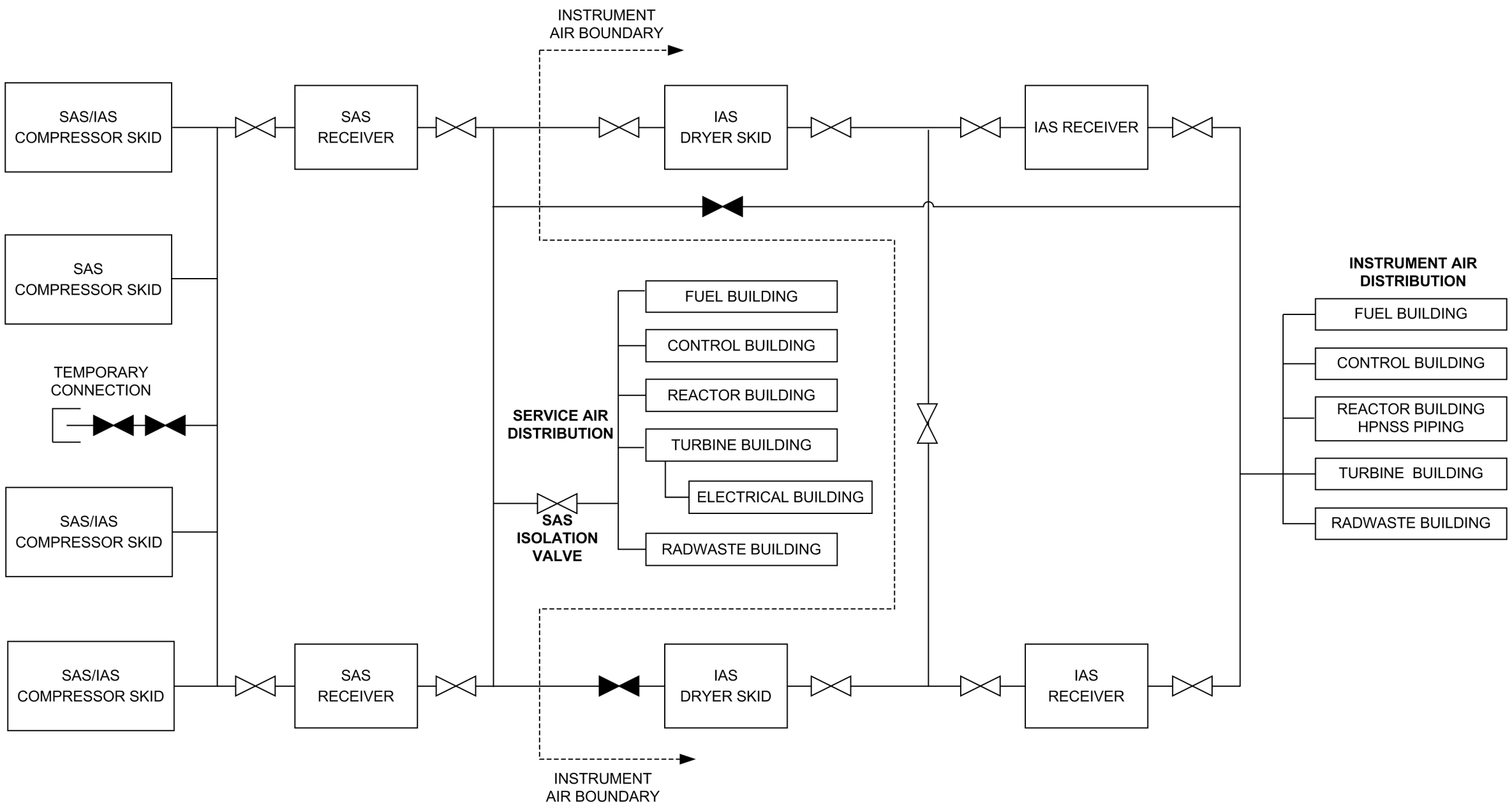

Figure 9.3-3. Service Air and Instrument Air System Simplified Diagram

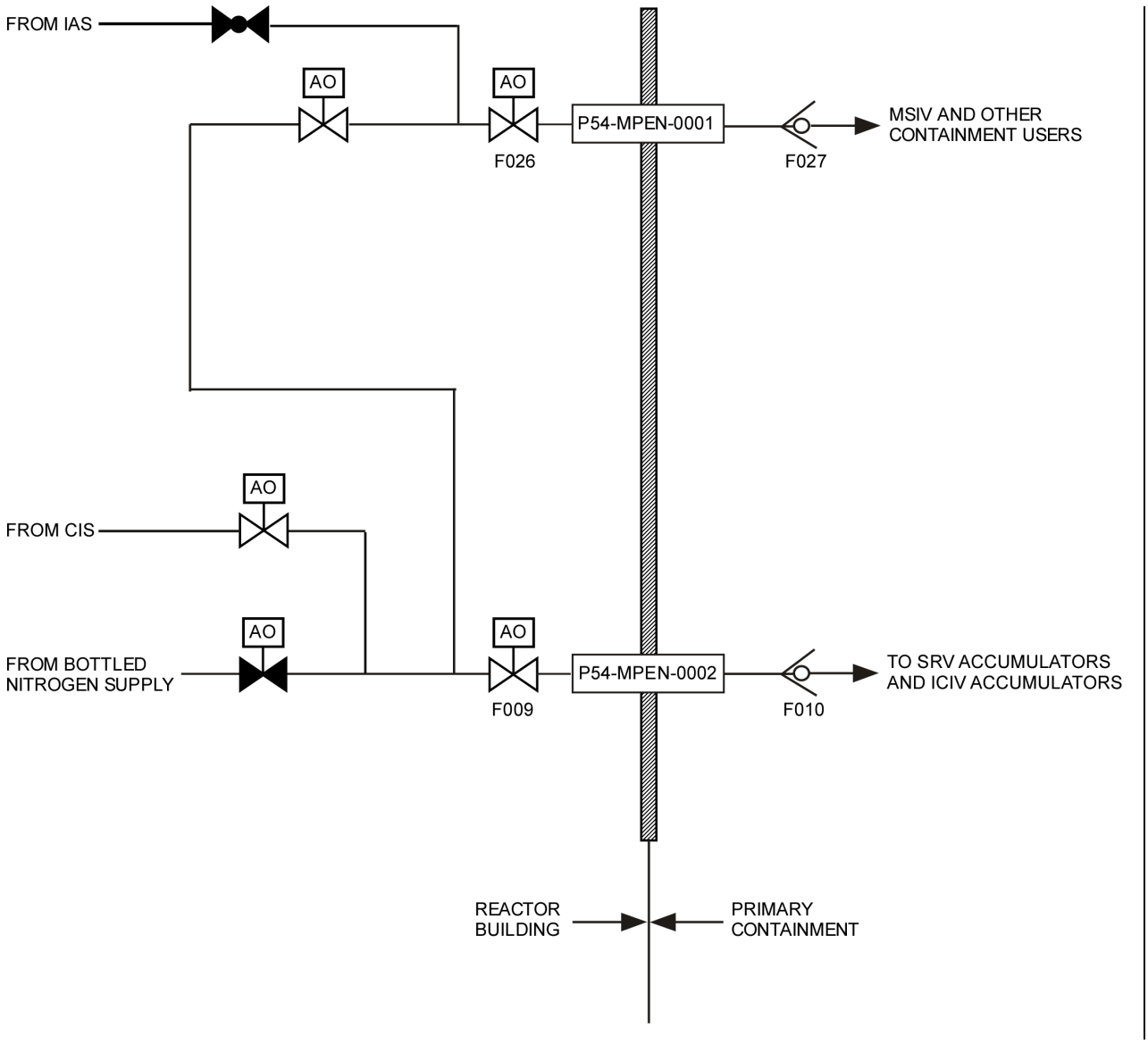

Figure 9.3-4. HPNSS Simplified Diagram

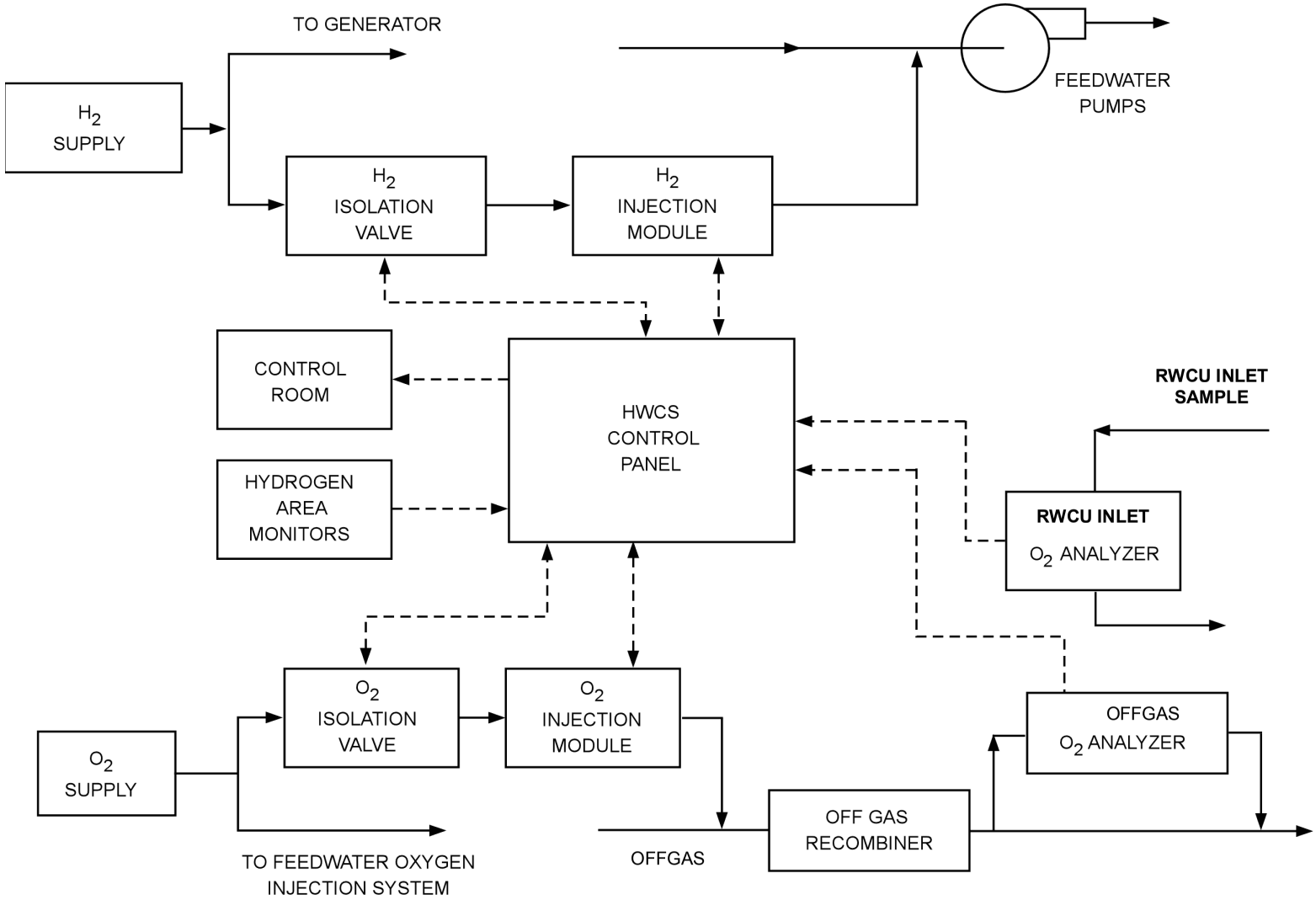

Figure 9.3-5. Hydrogen Water Chemistry System Simplified Diagram

9.4 HEATING, VENTILATION, AND AIR CONDITIONING

9.4.1 Control Building HVAC System

The Control Building Heating, Ventilation and Air Conditioning System (CBVS) serves all areas of the CB during normal operation. The CBVS maintains space design temperatures, quality of air and pressurization. It provides a controlled environment for personnel safety and comfort, and for the proper operation and integrity of equipment located in the CB.

The CBVS consists of two 100% redundant subsystems:

- The Control Room Habitability Area HVAC Subsystem (CRHAVS) serves the MCR and associated support areas. These areas comprise the Control Room Habitability Area (CRHA). The CRHA envelope can be isolated and protected as described herein during emergency modes of operation. When AC power is available, the CRHAVS provides HVAC functions for the CRHA via two nonsafety-related redundant fresh air supply fans and two redundant nonsafety-related internal floor mounted recirculation Air Handling Units (AHU). Radiological protection is provided by two trains of Emergency Filter Units (EFU). The EFUs are 100% capacity redundant units designed and tested to meet the requirements of Reg Guide 1.52. The EFUs supply a 99% credited efficiency for particulates and a 99% credited efficiency for elemental iodine and organic iodide as described in RG 1.52.

  When AC power is not available, the CRHA is cooled passively via heat transfer to the CRHA passive heat sink, and radiological protection continues to be provided from the safety-related EFUs which are powered from the safety-related battery power source. Portions of the CRHAVS that are safety-related are the EFUs and their associated fans, ductwork, instrumentation and controls, the CRHA boundary envelope, and the CRHA isolation dampers and associated ductwork. All remaining CRHAVS equipment is nonsafety-related. The CRHA isolation dampers automatically close to isolate the CRHA envelope and a division of EFU is automatically actuated in the event of a loss of normal AC power or during a radiological event.

- The Control Building General Area HVAC Subsystem (CBGAVS) serves the area outside the CRHA. The CBGAVS is nonsafety-related. The subsystem is made up of two subsets, Set A and Set B, each of which contain a single AHU enclosure with two redundant 100% capacity supply fans, internal coils and filters and associated return/exhaust fans and ductwork. The AHU subsystems are recirculation type AHUs, that recirculate most of the ventilation air and combine it with a smaller quantity of fresh outside air. Set A serves its respective HVAC equipment room, the A Nonsafety-Related Distributed Control and Instrumentation System (N-DCIS) Room, and the Division 1 and 4 Q-DCIS Rooms. Set B serves its respective HVAC equipment room, the B N-DCIS Room, the Division 2 and 3 Q-DCIS Rooms, and the corridor area around the CRHA.

The following General Design Criteria have been evaluated against the CRHAVS:

- The CRHAVS meets the acceptance criteria of GDC 2. The CRHA envelope is comprised of Seismic Category I structures and components that are protected from postulated tornados, hurricanes, tsunamis, seiches, and seismic events. The CRHAVS

components are designated as Seismic Category II with the exception of the safety-related CRHA envelope, isolation dampers, the EFUs and associated fans, dampers, ductwork, and instrumentation and controls, which are Seismic Category I. The CB structure is a Seismic Category I structure.

- The CRHAVS meets the acceptance criteria of GDC 4. The CRHAVS design complies with GDC 4 by ensuring that personnel in the MCR are protected from the effects of postulated accidents. The safety-related CRHA envelope, isolation dampers, EFUs and associated fans, dampers, ductwork, instrumentation and controls are designed to be protected from all postulated environmental and dynamic effects.
- The CRHAVS meets the acceptance criteria of GDC 5. The ESBWR CRHAVS supports a single unit, including one CRHA envelope. This meets the intent of GDC 5 with the following design considerations:
  - Each ESBWR unit at a multi-unit site has a separate control room;
  - An accident in one unit does not impair the ability to perform safety functions of the remaining units; and
  - An orderly shutdown and cooldown of remaining unit(s) would not be impaired.
- The CRHAVS meets the acceptance criteria of GDC 19. The CRHA is isolated on loss of normal AC power or if high radioactivity is detected in the MCR supply air duct, and a safety-related EFU automatically starts to pressurize and provide radiologically filtered air to the MCR. Radiation detectors in the intake air supply to the CRHA provide warning and initiate actions to protect control room personnel under accident conditions. The CRHAVS design maintains a habitable control room under accident conditions by providing adequate radiation protection and breathing air. When power is available, the Recirculation Air Handling Units (AHU) maintain the space temperature. Upon a loss of normal AC power, backup batteries supply N-DCIS power to the Recirculation AHUs, which continue dissipating the remaining nonsafety-related heat loads for 2 hrs, and which can operate indefinitely thereafter, using the ancillary diesel provided power. If the Recirculation AHUs are not available, safety-related temperature sensors with two-out-of-four logic automatically trip the power to selected N-DCIS components in the MCR, thus removing the heat load due to these sources. The remaining heat loads are passively dissipated by the walls, floor, ceiling and interior walls for the remainder of the 72 hr passive duration. ESBWR is committed to maintaining the MCR at a temperature no greater than 33.9°C (93°F) for any loss of cooling event, including loss of normal AC power or LOCA conditions. The radiation detection range is selected to cover normal operation, with sufficient sensitivity to initiate isolation of the MCR prior to exceeding the 10CFR50 Appendix A GDC 19 guidelines.
- The CBVS, including the CRHAVS meets the acceptance criteria of GDC 60. The CRHAVS EFUs meet the guidance of RG 1.52 as related to design, testing and maintenance criteria for atmosphere cleanup system and normal ventilation system air filtration and adsorption units. The CB does not house any portion of the nuclear steam supply process or other equipment that can act as a source of radioactive material and, therefore, has no postulated sources of radioactive materials in either particulate or gaseous form. The CB exhaust systems thus require no filtration or adsorption capability.

9.4.1.1 Design Bases

Safety Design Bases

Only the CRHAVS performs safety-related design basis functions in support of CRHA habitability. The habitability requirements for the CRHA are discussed and described in Section 6.4.

The CRHAVS provides the following safety-related design basis functions:

- Monitors the CRHA air supply for radioactive particulate and/or iodine concentrations; and
- Isolates the normal CRHA air supply and restroom exhaust, starts an EFU fan, and aligns the air supply through an EFU, upon a high radiation detection signal in the CRHA normal air supply, or upon an extended loss of AC power.

The portions of the CRHAVS which penetrate the CRHA envelope are safety-related and designed as Seismic Category I to provide isolation of the CRHA envelope from the outside and surrounding areas in the event of a design basis accident (DBA). The EFU portion of the subsystem is safety-related and designed and supported as Seismic Category I including the air intakes, ductwork, dampers, fans, instrumentation and controls. The remaining CRHAVS functions are nonsafety-related. The penetrations contain safety-related isolation dampers or valves that fail closed upon a loss of control signal, power, or instrument air. An EFU is automatically actuated upon radiological isolation of the CRHA envelope or an extended loss of AC power. If the initial EFU fails to start or is othewise unavailable, the second standby EFU automatically actuates.

CBVS equipment and ductwork whose failure could affect the operability of safety-related systems or components are designed as Seismic Category II. The remaining portion of the system is nonsafety-related and nonseismic.

The following CRHA components are safety-related and Seismic Category I:

- CRHA Boundary envelope including structures, doors, and components;
- EFUs including High Efficiency Particulate Air (HEPA) and carbon filters and related system components;
- Ductwork from the CRHA boundary envelope up to and including the CRHA isolation dampers;
- Tornado dampers provided on EFU air intake openings. These dampers are designed to withstand the full negative pressure drop;
- Tornado and tornado missile protection provided on all CRHA ventilation penetrations for outside air intake and exhaust openings; and.
- Tornado and tornado missile protection provided or the CBVS outside air intake and return/exhaust openings.

The CBVS provides a safety-related means to passively maintain habitable conditions in the CRHA following a design basis accident (radiological event concurrent with loss of normal AC power).

Radiation detected in the CRHA outside air inlet causes the following actions:

- The normally closed isolation dampers downstream of the operating EFU fan to open;
- The normal outside air inlet and restroom exhaust dampers to close; and
- An EFU fan to automatically start.

The CRHA is isolated during loss of normal AC power conditions and a safety-related EFU provides pressurization and breathing quality air. An EFU is powered from the safety-related battery supply for a 72 hour duration. For longer-term operation, (post 72 hrs) either of two (2) ancillary diesel generators can power either EFU fan system. The EFU delivery and discharge system is optimized to ensure that there is adequate fresh air delivered and mixed in the CRHA. This is accomplished by using multiple supply registers, which distribute the incoming supply air with the Control Room air volume, and a remote exhaust to prevent any short cycling. The EFU operation results in turning over the Control Room volume approximately 7-9 times per day. This diffusion design (mixing and displacement) in conjunction with the known convective air currents (due to heat loads/sinks) and personnel movement ensures that occupied zone temperature is within acceptable limits, buildup of contaminants (e.g., CO_2) minimal, and a freshness of air is maintained.

The CBVS provides the capability to maintain the integrity of the CRHA with redundant safety-related isolation dampers in all ductwork penetrating the CRHA envelope. The active safety-related components (CRHA isolation dampers and EFUs), that ensure habitability in the CRHA envelope, are redundant. Two trains of safety-related EFUs, including HEPA and carbon filters, serve the CRHA envelop. Redundant fans are provided for each EFU to allow continued operability during maintenance of electrical power supplies. Therefore a single active failure cannot result in a loss of the system design function.

During normal modes of operation and emergency modes with electrical power available, the CRHA is maintained within the temperature and relative humidity ranges noted in Table 9.4-1 by the nonsafety-related CRHAVS Recirculation AHU. During emergency operation, with a loss of normal AC power, a nonsafety-related CRHA recirculation air handling unit (AHU), powered from the nonsafety-related Uninterruptible AC Power Supply System, maintains the CRHA within the normal operating temperature range for two hours. This allows the continued operation of certain high heat producing nonsafety-related MCR DCIS electric loads.

Anytime during a loss of normal AC power, once either ancillary diesel generator is available, the power for either Recirculation AHU fan with auxiliary cooling unit can be provided via the ancillary diesel-powered generator. Thus, a Recirculation AHU can operate indefinitely during a CRHA isolation event. If the Recirculation AHUs are not available during the loss of normal AC power, safety-related temperature sensors with two-out-of-four logic automatically trip the power to selected N-DCIS components in the MCR, thus removing the heat load due to these sources. In the event the loss of normal AC power duration extends beyond two hours, the reduced CRHA heat load is passively cooled by the CRHA heat sink. The CRHA heat sinks consist of the following: the CRHA walls, floor, ceiling, and interior walls, and access corridors; adjacent Q-DCIS and N-DCIS equipment rooms and electrical chases; and, CRHA HVAC equipment rooms and HVAC chases. The CRHA heat sinks limit the CRHA temperature to a maximum temperature value of 33.9°C (93°F) for 72 hours. For the full duration of the design basis accident, the EFU maintains the safety-related habitability of the CRHA by supplying

filtered air for breathing and pressurization to minimize inleakage. During the initial 72 hours the EFU relies on safety-related batteries. Post 72 hours the EFU relies on RTNSS power supplies.

Full capacity cooling and ventilation for the CRHA, 72 hours after an accident, is by operation of the auxiliary cooling units. The auxiliary cooling units are air cooled chillers located in the CB mechanical equipment room, outside of the CRHA, with remote condensers. The auxiliary cooling system provides chilled water to the cooling coils in both the CRHAVS Recirculation AHUs and the CBGAVS Supply AHUs, located in the MCR and Mechanical Equipment Rooms respectively. This includes auxiliary cooling units chilled water recirculation pumps, independent from the normal Chilled Water System (CWS).

The MCR operator starts the auxiliary cooling system, in an accident scenario (post 72 hours) when AC power is being provided from the Ancilliary Diesel Generator (ADG). Interlocked motor operated isolation valves will close off the chilled water supply from the normal CWS and open the supply from the auxiliary cooling units. After the valves are in the proper lineup the auxiliary cooling system starts. All valves are located outside the CRHA. The valves are provided with RTNSS power, which is available 72 hours after an accident. The CRHA recirculation AHUs, CB general area supply AHUs, and supporting auxiliary cooling units use RTNSS power supplies to remove heat in support of post 72 hour MCR habitability.

The CBVS has RTNSS functions as described in Appendix 19A, which provides the level of oversight and additional requirements to meet the RTNSS functions. Performance of RTNSS functions is assured by applying the defense-in-depth principles of redundancy and physical separation to ensure adequate reliability and availability. In addition, augmented design standards are applied as described in Subsection 19A.8.3.

Power Generation Design Bases

The CBVS:

- Provides a controlled environment for personnel comfort and safety. Sufficient outside air is provided to meet the ventilation requirements for acceptable indoor air quality (Ref. ASHRAE 62.1-2007, Section 6). Table 9.4-1 depicts the area design temperature and humidity design parameters;
- Provides a controlled environment for the proper operation and integrity of equipment in the CB during normal, startup and shutdown operations;
- Provides redundant active components to increase reliability, availability and maintainability of the ventilation system;
- Provides shutoff dampers on the inlet and outlet of fans and AHUs if necessary to allow for maintenance;
- Provides shutoff valves at the inlet and outlet of cooling coils if necessary to allow for maintenance;
- Provides access for AHU fans, filter sections and duct mounted dampers to allow for maintenance;

- Provides the capability for manual control of system fans to facilitate maintenance and testing;
- Minimizes exposure to personnel during inspection and maintenance by locating equipment and instrumentation as far as practical from potential sources of high radiation;
- Maintains higher than atmospheric (positive) pressure to minimize the infiltration of outside air. Construction materials and processes that ensure the CB structure maintains low leakage or leak tight conditions above and below grade. The CRHA envelope penetrations are sealed and access doors are designed with self-closing devices that close and latch the doors following use. There are double door airlocks in the CRHA envelope for access and egress during emergencies when the CRHA is isolated and an EFU is operating;
- Reduces the potential spread of airborne contamination by maintaining airflow from areas of lower potential for contamination to areas of greater potential for contamination. The CRHA is maintained at a higher pressure than surrounding areas except during the isolation and smoke exhaust modes;
- Detects and limits the introduction of airborne hazardous materials (radioactivity or smoke) into the CRHA;
- Provides the capability to exhaust smoke, heat and gaseous combustion products from inside the CB to the outside atmosphere in the event of a fire. Construction materials and processes ensure that materials of construction are non-combustible and heat and flame resistant wherever possible. Materials that produce toxic or noxious vapors when subjected to a fire are avoided;
- Smoke control and removal functions are in accordance with National Fire Protection Association (NFPA) guidelines in Subsection 9.5.1, Fire Protection System, Subsection 9.5.1.11, Building Ventilation;
- Is designed such that failure of nonsafety-related equipment does not compromise or otherwise damage safety-related equipment; and
- Is provided with bullet-resistant exterior HVAC openings that penetrate the MCR vital envelope in accordance with 10 CFR 73.

9.4.1.2 System Description

Summary Description

The CBVS subsystems, the CRHAVS and the CBGAVS, are recirculating ventilation systems that provide filtered, conditioned air to serve all areas of the CB. The EFUs provide breathing air and pressurization to the CRHA when the CRHA envelope is isolated due to loss of AC power or high airborne radioactivity. The CBVS maintains space design temperatures and air quality. Outside air is normally supplied to augment the return air to maintain the CB under a slightly positive pressure. The CBGAVS return/exhaust fans normally direct most of the system airflow back to the system return flow with a portion of the flow exhausted to the atmosphere.

The CBVS provides a controlled environment for personnel safety and comfort, and for the proper operation and integrity of equipment located in the CB.

CBVS equipment (including fans, AHUs, and EFUs), and the CRHA are located within the CB Seismic Category I structural areas.

Detailed System Description

Figures 9.4-1, 9.4-2, 9.4-3 and 9.4-4 show the simplified system diagrams for the CRHAVS and the CBGAVS Set A and B, respectively. Table 9.4-2 lists the major equipment that comprises the CBVS. The layout of the CRHA envelope is shown in Figure 3H-1, Control Room Habitability Area.

The CRHA envelope includes the following areas:

- Main Control Room (Room 3275)
- Shift Supervisor's Office (Room 3272)
- Kitchen (Room 3273)
- Admin Area (Room 3270)
- Reactor Engineer/Shift Technical Advisor's Office (Room 3271)
- Main Control Room Storage Room (Room 3204)
- Electrical Panel Board Room (Room 3205)
- Restroom A (Room 3201)
- Restroom B (Room 3202)
- Auxilary Equipment Operator Workshop (Room 3207)
- AHU Room (Room 3208)
- Gallery (Room 3206)

These areas constitute the operations control area, which can be isolated and remain habitable for 72 hours, if required, following the occurrence of a LOCA, loss of normal AC power or a high radiation condition with or without AC power. Also, potential sources of danger such as steam lines, pressurized piping, pressure vessels, CO_2 fire fighting containers, etc. are located outside of the CRHA.

The CRHAVS consists of two trains. Each train consists of:

- One 100% capacity recirculation AHU;
- One 100% capacity outside air supply fan;
- One 100% capacity auxiliary cooling unit;
- One 100% capacity safety-related EFU;
- Two 100% capacity safety-related EFU fans; and
- Redundant set of safety-related CRHA isolation dampers.

The CRHAVS is configured as a recirculation system that contains the entire supply and return AHU air flow inside the CRHA, and incorporates a common supply duct for introducing outside air to the CRHA. The normal and EFU outside air intake flows are adjusted as required to maintain a minimum flow, and in conjunction with a controlled leak path, maintain a 31 PaG (1/8" w.g.) minimum positive pressure in the CRHA.

The intake design and location are in accordance with RG 1.194. Intake design, location and control also include considerations that minimize the introduction of radiological material, toxic gases, hazardous chemicals, smoke, dust and other foreign material. Ductwork, housings, access openings, etc. are constructed in such a manner as to minimize inleakage of potentially contaminated air into the CRHAVS air stream.

During normal operation, air is conditioned and distributed by a recirculation AHU and particulates are removed from the air by medium efficiency filters. Heat is transferred between the air and the heating elements and cooling coils inside the Recirculation AHU. Moisture is added to the air stream, if required, to maintain minimum humidity levels in the CRHA by the automatically controlled humidifier. The heating and cooling processes inherently remove moisture from the air stream and maintain the humidity below the maximum specified level. The Recirculation AHU distributes conditioned air beneath the CRHA raised floor to the CRHA rooms via registers in the raised floor. The Recirculation AHU intake is ducted from a location above the suspended ceiling and return air is returned to the Recirculation AHU via registers in the suspended ceiling.

Exhaust air from the restroom is ducted to the exhaust fan and exhausted to the outside atmosphere.

The CRHA Recirculation AHUs provide cooling to the CRHA whenever offsite or onsite AC power is available. The nonsafety-related Uninterruptible AC Power Supply System provides power for the CRHA Recirculation AHUs. Each Recirculation AHU is equipped with an auxiliary cooling unit with a cooling coil in the AHU.

The Recirculation AHU fans and associated auxiliary cooling units are battery powered during the first two hours of a loss of normal AC power from the nonsafety-related battery supply. Anytime during a loss of normal AC power, once either ancillary diesel generator is available, the power for either Recirculation AHU fan with auxiliary cooling unit can be provided via an ancillary diesel-powered generator. Thus, a Recirculation AHU can operate indefinitely during a CRHA isolation event. If the Recirculation AHUs are not available during the loss of normal AC power, safety-related temperature sensors with two-out-of-four logic automatically trip the power to selected N-DCIS components in the MCR, thus removing the heat load due to these sources.

Each EFU consists of a medium efficiency filter (40% minimum), a high efficiency particulate air (HEPA) filter (99.97%), a carbon adsorption filter (99% credited efficiency), and a post-filter downstream of the carbon filter (95%). The EFUs operate only during a radiological emergency or a loss of normal AC power and are able to function while powered from an offsite AC source, an onsite AC source, or an onsite safety-related DC source. The EFUs are monitored by instrumentation that detects a loss of airflow as well as radiation downstream of the EFU filters. Upon such detection, the operating EFU is isolated and the standby EFU is automatically placed in service.

Each EFU provides sufficient quality air to maintain positive pressure in the CRHA when the CRHA envelope is isolated. An EFU is automatically actuated when the CRHA envelope is isolated during a loss of AC power or due to high airborne radioactivity. Controls to manually isolate the CRHA envelope and to manually actuate the EFUs are also provided.

The CBGAVS consists of:

- Two sets of single AHUs with two 100% capacity supply fans;
- Two sets of two 100% capacity return/exhaust fans; and
- Supplemental electric duct heaters.

The CBGAVS serves non-divisional equipment rooms, corridors and other miscellaneous rooms in the CB general areas. Set A serves Division 1 and 4 areas. Set B serves Division 2 and 3 areas. Each set is configured as a recirculation system that incorporates a common supply and return duct system for the distribution of conditioned air. During normal operation air travels through the AHU stages. Particulates are removed from the air by low and high efficiency filters. Heat is transferred between the air and the heating elements and cooling coils. The outside air intake and exhaust are adjusted to maintain a slightly positive pressure in the CB general areas.

System Operation

The CBVS operates during all modes of normal power plant operation, including startup and shutdown. The CBVS is not required to operate during a loss of normal AC power except the EFUs and the CRHA isolation dampers. The CRHA isolation dampers fail closed on a loss of power or instrument air. During a loss of normal AC power or an event that causes isolation of the CRHA envelope, the CRHA isolation dampers automatically close and an EFU is automatically actuated. Upon an isolation of the CRHA envelope, the EFU operates and is controlled indefinitely through the Q-DCIS source, or up to 72 hours from the safety-related battery supply.

For longer-term operation (post 72 hrs), either of two (2) ancillary diesel generators can power either EFU fan system. Also, a Recirculation AHU continues operation to maintain the CRHA environment upon the initiation of a CRHA isolation. The Recirculation AHU fans and associated auxiliary cooling units are battery powered during the first two hours of a loss of normal AC power from the nonsafety-related battery supply. Anytime during a loss of normal AC power, once either ancillary diesel generator is available, the power for either Recirculation AHU fan with auxiliary cooling unit can be provided via the ancillary diesel generator. If the Recirculation AHUs are not available during the loss of normal AC power, safety-related temperature sensors with two-out-of-four logic automatically trip the power to selected N-DCIS components in the MCR, thus removing the heat load due to these sources.

Rooms containing safety-related equipment are passively cooled by heat transfer to the CRHA heat sink for the first 72 hours of a loss of normal AC power to limit the temperature rise to the maximum temperature limits listed in Table 9.4-1.

Normal Operating Mode:

- Each subsystem of the CBVS is fully operational with one train of its redundant equipment on standby.

- The CRHAVS and CBGAVS operate with one outside AHU and one exhaust/return fan (CBGAVS only) in operation to maintain design conditions in the respective areas served. The outside air intakes and exhausts (CBGAVS only) are adjusted to maintain a slightly positive pressure in the CRHA and CBGAVS.
- The CRHAVS maintains normal design conditions in the CRHA. One Recirculation AHU and one outside air intake fan are manually selected to start and cause the associated dampers to open to the required positions. The EFUs and EFU fans do not operate during normal operation.
- The CBGAVS maintains normal design conditions in the general areas of the CB. One supply AHU and its corresponding return/exhaust fan is manually selected to start and cause its return air and outside dampers to open to the required positions
- The CBGAVS includes electric unit heaters to provide heat when required to maintain minimum space temperature. Thermostats control the unit heaters to maintain the space temperatures. Electric heating coils are provided in the AHUs when required to preheat the outside air.
- The CRHAVS Recirculation AHUs include electric heating coils to heat the CRHA recirculated air as necessary to maintain the normal CRHA temperature range.
- Cooling coils in the AHUs provide cooling to the CRHA and CB general areas as required to maintain design conditions.

Standby Operating Mode (in the event of low airflow in the AHU, supply air duct, or exhaust air duct):

- The operating AHU and return/exhaust fan (CBGAVS only) trips and the associated isolation dampers close.
- The standby AHU and return/exhaust fan (CBGAVS only) starts and the associated dampers automatically open.

Fire/Smoke Operating Modes:

The following is a brief description of the Fire/Smoke Operating Modes. For a more complete description of the interface between the HVAC systems and the Fire Protection System, refer to Subsection 9.5.1.

- Smoke detection capability in the CRHAVS or the CBGAVS automatically detects and annunciates upon the presence of smoke. Upon receipt of the outside air intake smoke alarm, MCR operator manual action is required to isolate the CRHAVS or the CBGAVS from the outside air. Return air is recirculated through the CBGAVS AHU, and the CRHAVS Recirculation AHU continues to operate normally. The CRHAVS restroom exhaust fan is stopped automatically when the restroom exhaust air damper close signal reaches the exhaust damper.
- In the CBGAVS, smoke dampers are provided to prevent smoke and hot gases from migrating into other fire areas. Upon detection of smoke, the smoke dampers automatically close and isolate the fire area in the general areas of the CB.

- MCR operators manually initiate the smoke purge mode of operation of the CBGAVS. Fully opening the normal outside air inlet dampers and exhaust air dampers and closing the recirculation dampers, accomplishes the smoke purge. This provides 100% outside airflow. Any closed dampers in the fire area that are required to be open for purging smoke are reopened as part of the smoke purge mode. Area smoke detectors are provided in the CRHA and general areas of the CB.
- The smoke purge mode of operation of the CRHAVS is manually initiated by MCR operators. Smoke purge is accomplished by opening the smoke purge subsystem outside air intake dampers and the Smoke Purge Exhaust Fan exhaust dampers, and starting the Smoke Purge Exhaust Fan. The CRHAVS Recirculation AHUs, EFUs, or normal outside air intake fans can be operated or secured during smoke purge at the discretion of the MCR operators. Any closed fire dampers in the fire area that are required to be open for smoke purging are reopened as part of the smoke purge mode.

Radiological Event Operation:

- When AC power is available, an outside air high radiation signal automatically starts one of the EFU fans and opens the isolation dampers downstream from the EFU. The signal also closes the normal outside air isolation dampers, stops the normal outside air intake fan, closes the restroom exhaust isolation dampers and automatically stops the restroom exhaust fan. All outside air is drawn through the EFU. During this mode of operation the EFU is monitored for low airflow and for radiation downstream of the EFU. Should either of these conditions be detected, the standby EFU is automatically started and the operating EFU is isolated.
- On a loss of normal AC power, the CRHA assumes the radiological protection mode of operation. Due to the loss of AC power, the CRHA envelope is automatically isolated as the normal outside air intake and restroom exhaust dampers fail closed, the restroom exhaust fan stops, and the EFU is automatically started to supply outside air and pressurization to the CRHA. The EFU fans and dampers are powered from the safety-related battery supply. The CRHA Recirculation AHUs and auxiliary cooling units remain in operation for two hours powered from the nonsafety-related battery supply. At any time during that two-hour period, they can be aligned to an ancillary diesel generator bus and operate indefinitely.

9.4.1.3 Safety Evaluation

The CBVS is nonsafety-related except for the CRHA envelope, the CRHA heat sink, the EFUs and associated dampers, ductwork, instrumentation and controls, which are safety-related. The CRHA envelope includes structures, doors, penetrations, valves, isolation dampers, the piping, tubing, and ductwork up to the valves and isolation dampers, and the EFU flow path. The redundant isolation dampers fail closed upon a loss of control signal, power, or instrument air.

9.4.1.4 Testing and Inspection Requirements

Routine testing of components of the CBVS is conducted in accordance with routine power plant requirements for demonstrating system and component operability and integrity.

Periodic surveillance testing of safety-related CRHA isolation dampers and the EFU components and associated instruments and controls is performed per IEEE-338. Preoperational testing to demonstrate the integrity of the CRHA envelope is performed in accordance with ASTM E741. Safety-related CRHA isolation dampers and the EFUs are operational during plant normal and abnormal operating modes.

The CRHAVS EFU components are periodically tested in accordance with the applicable portions of ASME AG-1 Code on Nuclear Air and Gas Treatment to meet RG 1.52 requirements. The EFUs have a credited HEPA efficiency of 99% and a credited carbon efficiency of 99%.

9.4.1.5 Instrumentation Requirements

The CBVS component operating status and system parameters are monitored, indicated and controlled in the MCR and locally when required.

CRHA isolation damper position indicators (open/closed) are provided and are located in the MCR.

Flow instrumentation is provided for fans and AHUs to indicate status and to trip malfunctioning units on low flow and to start standby units.

Differential pressure transmitters are used to indicate filter pressure drop and alarm high filter pressure levels.

CRHAVS differential pressure transmitters are provided to monitor CRHA pressure with respect to adjacent areas. Multiple transmitters are used with low select logic to compensate for wind effects. The CRHAVS EFUs have safety-related instrumentation and controls that detect low air flow and detect radiation downstream of the EFUs. Such detection will initiate the standby EFU.

CRHA airlock door position instrumentation is provided and an audible alarm sounds if airlock doors are open during a CRHA isolation.

CRHAVS non-safety related CRHA room temperature sensors are provided to:

- Monitor room temperature;
- Provide control signals to heating elements and cooling coils; and
- Provide alarms on high or low space temperatures.

If the redundant, nonsafety-related CRHAVS cooling is lost, and the CRHA temperature increases, safety-related sensors provide a trip signal via Safety System Logic and Control/Engineerd Saftey Feature (SSLC/ESF) to de-energize nonsafety N-DCIS equipment located in the CRHA. Safety-related temperature sensors monitoring CRHA temperatures provide the logic to trip major N-DCIS loads in the CRHA.

Duct temperature sensors are provided to indicate outside air, and AHU coil entering and leaving, temperatures as required by system logic control.

Instrument sensing elements are located and mounted such that the accuracy of the measured parameter is representative and optimized.

Smoke detectors are provided as required by NFPA 90A to detect smoke in the system ductwork and CB areas.

The Q-DCIS provides a control and instrumentation data communication network to support the CBVS safety-related functions.

This instrumentation conforms to GDC 13. Refer to Subsection 3.1.2.4 for a general discussion on GDC 13.

9.4.1.6 COL Information

None

9.4.1.7 References

The applicable HVAC codes and standards are shown in Table 9.4-17.

9.4.2 Fuel Building HVAC System (FBVS)

The FB Heating, Ventilation and Air Conditioning System (FBVS) serves the following areas of the FB:

- General areas;
- Spent Fuel Pool; and
- Equipment areas.

Relative to the FBVS, this subsection addresses applicable requirements of General Design Criteria (GDC) 2, 5, 60 and 61. These GDCs are discussed in Standard Review Plan (SRP) 9.4.2.

The ESBWR:

- Meets GDC 2, by compliance to RG 1.29, Position C.1 for safety-related portions and Position C.2 for nonsafety-related portions. The FB is a Seismic Category I structure except for the penthouse that houses HVAC equipment that is Seismic Category II. All FBVS components are designed as Seismic Category II with the exception of the safety-related isolation dampers and associated controls. The FBVS maintains its structural integrity after a Safe Shutdown Earthquake (SSE).
- Meets GDC 5, for shared systems and components important to safety for the FB isolation dampers. There are no safety-related shared (multiple reactor units) structures, systems or components in the FBVS.
- Meets GDC 60, by suitably controlling the release of gaseous radioactive effluents to the environment. The system may direct its exhaust air to the FB HVAC Purge Exhaust Filter Unit during periods of high radioactivity. The FB HVAC Purge Exhaust Filter Unit is designed, tested, and maintained in accordance with RG 1.140. DCD Tier 2, Section 11.5, Process Radiation Monitoring System, describes the Radiation Monitoring and control system interfaces with the FBVS.
- Meets GDC 61, by providing containment, confinement, and filtration to limit releases of airborne radioactivity as stated in RG 1.13, Position C.4. The system may direct its exhaust air to the FB HVAC Purge Exhaust Filter Unit during periods of high radioactivity. The FB HVAC Purge Exhaust Filter Unit provides filtration prior to

discharge to the RB/FB ventilation stack. The FB HVAC Purge Exhaust Filter Unit is designed, tested, and maintained in accordance with RG 1.140.

9.4.2.1 Design Bases

Safety Design Bases

The FBVS is nonsafety-related except for the isolation dampers and ducting penetrating the FB boundary. The FB boundary is automatically isolated in the event of fuel handling accident or other radiological accidents. With the above exception, the FBVS performs no safety-related functions.

The FBVS has RTNSS functions as described in Appendix 19A, which provides the level of oversight and additional requirements to meet the RTNSS functions. Performance of RTNSS functions is assured by applying the defense-in-depth principles of redundancy and physical separation to ensure adequate reliability and availability as described in Subsection 19A.8.3.

Power Generation Design Bases

The FBVS:

- Provides a controlled environment for personnel comfort, and proper operation and integrity of equipment located in the building. See Table 9.4-3 for area temperatures.
- Maintains a negative pressure in the building to minimize exfiltration of potentially contaminated air. See Table 9.4-3 for system design pressures. The term "Slightly Negative Pressure" is applied hereafter and represents a pressure range from less than zero to –124 PaG (-0.50" w.g.).
- Maintains airflow from areas of lower contamination potential to areas of greater contamination potential by maintaining a slightly negative pressure in potentially contaminated areas.
- Is provided with redundant active components to increase the reliability, availability, and maintainability of the system.
- Is capable of exhausting smoke, heat and gaseous combustion products in the event of a fire.
- Smoke control and removal functions are in accordance with NFPA guidelines in Subsection 9.5.1.11, Building Ventilation.
- Shuts down during radiological accidents and isolates the FB boundary to prevent uncontrolled releases to the outside atmosphere.
- Provides capability to divert exhaust air to the Fuel Building HVAC Purge Exhaust Filter Units.
- Provides pool sweep ventilation air over the Spent Fuel Pool surface.
- Is designed such that failure of the system does not compromise or otherwise damage safety-related equipment.
- Is provided with shutoff dampers on the inlet and outlet of fans and AHUs to allow for maintenance as applicable.

- Is provided with shutoff valves at the inlet and outlet of cooling coils to allow for maintenance as applicable.
- Is provided with access doors for AHUs, fans, filter sections, and duct-mounted dampers to allow for maintenance as applicable.
- Is provided with capability for manual control of system fans to facilitate testing and maintenance.
- Maintains its structural integrity after a Safe Shutdown Earthquake.
- Provides cooling for FAPCS pump motors, rooms, or electrical/instrument panels designed to limit the room/equipment's environmental qualification temperature when the building is isolated.

9.4.2.2 System Description

Summary Description

The FBVS maintains space design temperatures, quality of air, and pressurization in the FB. The system consists of two subsystems: the FB General Area HVAC Subsystem (FBGAVS) and the FB Fuel Pool Area HVAC Subsystem (FBFPVS). The FBGAVS serves the general areas of the FB. The FBFPVS serves the Spent Fuel Pool and equipment areas of the FB. Recirculation air handling units provide supplementary cooling for selected rooms in the FB as required.

Detailed System Description

FBGAVS

Figure 9.4-5 shows the simplified system diagram for the FBGAVS. Table 9.4-4 lists the major equipment for FBGAVS and Subsection 9.4.10 describes system components.

The FBGAVS is a once-through air conditioning and ventilation system with air handling unit (AHU), redundant exhaust fans and FB boundary isolation dampers. The AHU includes filters, heating elements, cooling coils, and redundant AHU supply fans. Outside air is filtered and heated or cooled prior to being distributed by the AHU. A common supply duct system is incorporated to distribute conditioned air to the general areas of the FB. The exhaust fan discharges the air to the outside atmosphere through the monitored RB/FB vent stack where the exhaust air is monitored for radioactivity. The exhaust air may be manually diverted to the FB HVAC Purge Exhaust Filter Unit. Electric unit heaters provide supplementary heating as required. A recirculation AHU provides supplementary cooling for the fine motion control rod drive (FMCRD) room. The Chilled Water System provides cooling water for the FBGAVS AHUs. The Instrument Air System provides instrument air for the pneumatic actuators.

The FBGAVS AHUs and exhaust fans are located in the FB HVAC Equipment Area. The FMCRD maintenance room recirculation AHU is located in the FB.

Cooling is provided for FAPCS pump motors, rooms, and/or electrical/instrument panels designed to limit the room/equipment's environmental qualification temperature when the building is isolated.

FBFPVS

Figure 9.4-6 shows the system diagram for the FBFPVS. Table 9.4-5 lists the major equipment for the FBFPVS.

The FBFPVS is a once-through air conditioning and ventilation system with AHU and redundant exhaust fans. The AHU includes filters, heating elements, cooling coils, and redundant AHU supply fans. Outside air is filtered, heated or cooled, and distributed across the Spent Fuel Pool surface and to the equipment areas. Air is exhausted from the Spent Fuel Pool, through redundant FB boundary isolation dampers, to the outside atmosphere through the RB/FB vent stack. During high radiation conditions, the exhaust air may be manually diverted to the Fuel Building HVAC Purge Exhaust Filter Unit. The exhaust fans are also used for smoke removal. Electric unit heaters provide supplementary heating as required. The Chilled Water System provides cooling water for the FBFPVS AHUs. Instrument air is provided for the pneumatic actuators.

The FBFPVS AHUs and exhaust fans are located in the FB HVAC Equipment Area.

During high radiation conditions, the FB boundary isolation dampers close automatically and the supply AHU and exhaust fan shut down automatically in both subsystems.

System Operation

The FBVS operates during all normal, startup and shutdown modes of plant operation.

During normal operation, both the FBGAVS and FBFPVS are fully operable. Each subsystem operates with one supply AHU and one exhaust fan in service. The redundant supply fan (in each AHU) and exhaust fan are maintained in standby. In the event of low airflow in an exhaust duct, the standby exhaust fan starts. Simultaneously, due to a loss of negative pressure in the area, the AHU supply fan serving the area stops. The AHU supply fan restarts upon reestablishment of the required negative pressure. In the event of a fan failure, the failed fan automatically shuts down and the standby fan automatically starts.

On detection of high radiation, the Process Radiation Monitoring System provides a signal that trips the FBGAVS and FBFPVS. Each subsystem's supply AHU and exhaust fan shuts down and their associated dampers close. Exhaust air from either subsystem may be manually diverted to the FB HVAC Purge Exhaust Filter Unit. It is then exhausted to the RB/FB vent stack by the Fuel Building HVAC Purge Exhaust Filter Unit exhaust fan. Normal ventilation for the area is resumed once the area is decontaminated or the source of radioactivity is removed.

The FMCRD room AHU fan is started and stopped locally. A room thermostat modulates the chilled water valve in response to the room temperature.

An individual local thermostat controls each electric unit heater.

9.4.2.3 Safety Evaluation

The FBVS is not required to operate during a Station Blackout (SBO).

The FB boundary isolation dampers automatically close in the event of a fuel handling accident or other radiological accident. The safety-related isolation dampers fail closed upon a loss of control signal, power, or instrument air.

The FBVS components are designed as Seismic Category II, except for the safety-related isolation dampers and associated controls. The isolation dampers and associated controls are designed as Seismic Category I.

The FBVS does not have any safety-related functions, except for boundary isolation dampers closing in the event of radiological accidents. Redundant dampers and controls are provided so the refueling area is isolated upon demand even if a damper or control fails.

9.4.2.4 Testing and Inspection Requirements

The FBVS is designed to permit periodic inspection and testing of major components, such as fans, motors, dampers, coils, filters, ducts, piping, and valves to verify their integrity and capability. Equipment layout provides easy access for inspection and maintenance.

Routine testing of the FBVS is conducted in accordance with normal power plant requirements. This testing demonstrates system and component operability and integrity.

Surveillance testing of safety-related isolation dampers is carried out in accordance with IEEE-338.

The Fuel Building HVAC Purge Exhaust Filter Unit is tested in accordance with RG 1.140.

9.4.2.5 Instrumentation Requirements

The FBVS is operated from the MCR. The FBVS is manually controlled, except for certain automatic operations described below:

- FB boundary isolation dampers close on receipt of a high radiation signal or on a loss of AC power, control power, or instrument air;
- For supply and exhaust fans, the lead fan is selected manually. The standby fan automatically starts upon indication of low flow in the associated discharge duct;
- Fan operation is allowed only when the corresponding fan shutoff dampers (one upstream and one downstream) are open;
- Supply fans auto start after the exhaust fans have started and a negative pressure has been established in the ventilated spaces; and
- Differential pressures between the ventilated spaces and the outside are transmitted to a pressure controller. The pressure controller adjusts the exhaust fan's flow with variable frequency motor drives or with variable inlet vanes. This exhaust airflow control maintains a negative pressure.

The FBVS component operating status and system parameters are monitored and indicated in the MCR and locally where required.

Indications and alarms include the following:

- Indicators for system operating parameters, including flow rates, temperatures, damper position, filter pressure drop and building pressure with respect to atmospheric; and
- Alarms for high or low conditions, including airflow rates, temperatures, filter pressure drop, building differential pressure and smoke detection.

This instrumentation conforms to GDC 13. Refer to Subsection 3.1.2.4 for a general discussion on GDC 13.

9.4.2.6 COL Information

None

9.4.2.7 References

The applicable HVAC codes and standards are shown in Table 9.4-17.

9.4.3 Radwaste Building Heating, Ventilation and Air Conditioning System

The RW HVAC System (RWVS) is nonsafety-related and consists of the following subsystems:

- Radwaste Building Control Room (RWCR) HVAC Subsystem (RWCRVS); and
- Radwaste Building General Area (RWGA) HVAC Subsystem (RWGAVS).

Regarding the ESBWR nonsafety-related RWVS, this subsection addresses or refers to other DCD locations that address the applicable requirements of General Design Criteria (GDC) 2, 5 and 60 discussed in Standard Review Plan (SRP) 9.4.3. The ESBWR:

- Meets GDC 2, by compliance to RG 1.29, Position C.2 for nonsafety-related portions. The Radwaste Building (RW) structure meets RG 1.143 category RW-IIa.
- Meets GDC 5, compliance for safety-related shared systems and components. There are no safety-related shared systems and/or components in the RWVS.
- Meets GDC 60, by suitably controlling the release of gaseous radioactive effluents to the environment. The system directs exhaust air to the RWGA exhaust filtration units. The RWGA exhaust filtration units are designed, tested and maintained in accordance with RG 1.140. The RWGAVS contains three 50% capacity exhaust filtration units. These units exhaust air from the building, which is maintained under negative pressure, to the RW vent stack.

9.4.3.1 Design Bases

Safety Design Bases

The RWVS is nonsafety-related and performs no safety-related functions.

Power Generation Design Bases

The RWVS provides a controlled environment for personnel comfort and for proper operation and integrity of equipment.

RWCRVS

- The RWCRVS maintains the RWCR area temperature and pressure as provided in Table 9.4-6.
- The RWCRVS maintains the control room areas at a slightly positive pressure (design +31 PaG [+0.125” w.g.]) relative to adjacent areas to minimize infiltration of air. The

term "Slightly Positive Pressure" used hereafter in this Section is an allowable range from greater than zero to +124 PaG (+0.50" w.g.).

- Redundant components are provided to increase system reliability, availability and maintainability.

RWGAVS

- The RWGAVS maintains the conditions in the RWGA as provided in Table 9.4-6.
- The RWGAVS maintains the RW general area at a slight negative pressure (design -31 PaG [-0.125" w.g.]) relative to adjacent areas and outside atmosphere to prevent the exfiltration of air to adjacent areas. The term "Slightly Negative Pressure" is applied hereafter in this Section and represents an allowable pressure range from less than zero to -124 PaG (-0.50" w.g.). Adequate exhaust from the trailer bays is provided to maintain inflow of air from the outside when the truck doors are open.
- The RWGAVS is comprised of supply and exhaust subsystems to maintain direction of air flow from personnel occupancy areas towards areas of increasing potential contamination. Exhaust hoods are provided at locations where, under normal operation, contaminants could escape to the surrounding areas.
- The RWGAVS provides the capability to exhaust air from the radwaste processing systems.
- All exhaust air from the RWGA is discharged to the RW vent stack.
- Redundant components are provided as necessary to increase system reliability, availability and maintainability.
- Filtered outdoor air is provided at a minimum air exchange rate of two volume changes per hour.
- Smoke control and removal functions are in accordance with NFPA guidelines in Subsection 9.5.1.11, Building Ventilation.
- The RWGAVS limits the release of airborne radioactive particulates to the atmosphere by HEPA filtration of the exhaust air from the building prior to discharge to the atmosphere.
- The exhaust air is monitored for radiation prior to discharge to atmosphere.

9.4.3.2 System Description

Summary Description

RWCRVS

The RWCRVS is a recirculating air conditioning system to provide filtered, heated or cooled, and humidified air to the RWCR area to maintain the required design ambient conditions and pressurization. The RWCRVS consists of two 100% capacity AHUs and a common outside air intake louver. Each AHU contains filters, a humidifier, a chilled water cooling coil, a heating coil, and a supply fan. Conditioned air is supplied to the control room , the electrical equipment room, elevator machine room and HVAC equipment room areas through ducts, dampers and registers.

The RWCRVS is capable of once-through operation for smoke removal using two 50% capacity exhaust fans.

RWGAVS

The RWGAVS is a once-through air conditioning and ventilation system to provide filtered and heated or cooled air to the RWGA. The RWGAVS supply consists of one AHU with two (2) 100% capacity supply fans, in parallel, connected to a supply distribution ductwork system and an outside air intake louver. The AHU contains filters, cooling and heating coils, two redundant supply fans, and isolation dampers.

The RWGAVS exhaust consists of three 50% capacity air filtration units (AFU), each with prefilters and HEPA filters, a 50% capacity exhaust fan, and a check valve/backdraft damper. Exhaust capacity is greater than the supply capacity in order to maintain the required RWGA negative pressure. Each AFU is connected to a common exhaust collection duct and a common exhaust duct discharging to the RW vent stack.

The RWGAVS exhaust subsystem is capable of once-through operation for smoke removal. The AFUs are bypassed in this mode.

Detailed System Description

RWVS

Simplified system diagrams for the two RWVS subsystems are provided in Figures 9.4-7a and 9.4-7b. Design Conditions for the system are provided in Table 9.4-6, Major Equipment is listed in Table 9.4-7, and Component Information is described in Subsection 9.4.10.

The RWVS equipment is located in the Radwaste Building.

All RWVS equipment is classified as nonsafety-related, Seismic Category NS, and is powered from a nonsafety-related bus distribution system.

The Chilled Water System provides the cooling for the AHUs. Makeup water is provided to the humidifiers and instrument air is provided to the pneumatic controls.

System Operations

The RWCRVS operates by mixing return air and outside air. The air mixture is filtered, cooled or heated, humidified and distributed to the RWCR area. One 100% capacity AHU normally operates.

Following a fire, the RWCRVS subsystem can be placed in the smoke purge mode by manually starting the smoke removal fan and operating the supply system in the once-through mode.

The RWGAVS operates in the once-through mode. One 100% AHU supply fan and two 50% exhaust AFUs operate during normal plant operation. The second AHU supply fan and the third 50% exhaust AFU are in standby. The supply fans are interlocked with the exhaust fans. Starting the RWGAVS starts the lead AFU exhaust fans. Once negative pressure in the RWGA is established, the outside air intake damper opens and the lead AHU supply fan starts. Outside air is filtered, heated or cooled, and distributed to the RWGA.

Failure of one operating exhaust fan that results in the loss of negative pressure in the RWGA automatically starts the redundant standby exhaust fan (and AFU). The supply fan continues to

operate. The negative pressure in the building can be lost momentarily without damage to the building structure. If the standby exhaust fan does not start, the supply fan and the operating exhaust fan are stopped.

Following a fire, the RWGA Exhaust Subsystem is placed in the smoke purge mode by closing the AFU inlet and outlet dampers, opening the bypass duct dampers, and operating the exhaust fan(s).

9.4.3.3 Safety Evaluation

The RWVS has no safety-related function. Operational failure of any single unit of the RWVS does not prevent safety-related equipment from performing any safety-related function.

9.4.3.4 Testing and Inspection Requirements

The RWVS is designed to permit periodic inspection and testing of major components, such as fans, motors, dampers, coils, filters, ducts, piping and valves to verify their integrity and capability. Equipment layout provides easy access for inspection and maintenance.

RWVS components are tested periodically to verify system availability. Air Filtration Units (AFUs) are periodically tested in accordance with RG 1.140, "Design, Inspection, and Testing Criteria for Air Filtration and Adsorption Units of Normal Atmosphere Cleanup Systems in Light-Water-Cooled Nuclear Power Plants."

9.4.3.5 Instrumentation Requirements

Instrumentation and controls for the RWVS are located at a local panel in the RW. Selected HVAC alarm signals are transmitted to the general trouble alarm located in the RWCR. These indications and controls include the following:

- Start-Stop-Auto control switches for system and operating equipment;
- System operating parameters (including flow rate, temperature, humidity and differential pressure);
- Damper position indication and controls;
- Failure alarms for major components; and
- High radiation in the exhaust air duct.

The RWVS is manually controlled, except for certain automatic operations described below.

For the RWGA exhaust fans, the lead fans are started manually and the standby fan automatically starts upon indication of low flow in either lead fan discharge duct.

Interlocks only allow fan operation when the corresponding fan isolation dampers (one upstream and one downstream) are open. For the RWGAVS the interlock only allows the lead supply fan to run when negative pressure is established in the associated spaces. Differential pressures between these areas and the outside are transmitted to a pressure controller (located on the HVAC control panel in the RWCR) that modulates airflow by controlling exhaust fan speed. This exhaust airflow modulation maintains negative air pressure in the ventilated spaces. The RWCRVS maintains a slightly positive pressure with respect to the RW general areas.

A temperature controller modulates the temperature control valves in the water supply lines to the cooling coils from signals from temperature transmitters in the RWCR and general areas. A relative humidity controller adjusts the RWCRVS humidifier to maintain the humidity within the desired range in the RWCR.

A low differential pressure across the operating fan sounds an alarm in the RWCR, de-energizes the failed fan, and starts the corresponding standby fan. The fan discharge damper closes when the fan is de-energized.

A general interlock between exhaust fans and supply fans stops all the RWGAVS fans when the RWGA air pressure becomes higher (or lower) than specified to avoid damage to the building structure.

This instrumentation conforms to GDC 13. Refer to Subsection 3.1.2.4 for a general discussion of the GDC.

9.4.3.6 COL Information

None

9.4.3.7 References

The applicable HVAC codes and standards are shown in Table 9.4-17.

9.4.4 Turbine Building HVAC System

The Turbine Building HVAC System (TBVS) includes the Turbine Building supply air fans and the associated AHU, and the Turbine Building exhaust fans and associated filter trains. The various AHUs (Air Handling Units) for local area cooling within the Turbine Building are included in the TBVS.

Regarding the ESBWR nonsafety-related TBVS, this subsection addresses or refers to other locations that address the applicable requirements of the General Design Criteria (GDC) 2, 5 and 60, discussed in Standard Review Plan (SRP) 9.4.4.

The ESBWR:

- Meets GDC 2, as it relates to meeting the guidance of RG 1.29, Position C.2 for nonsafety-related portions. The TB is a Seismic Category II nonsafety-related structure.
- Meets GDC 5, for shared systems and components. There are no safety-related shared (multiple reactor units) structures, systems or components in the TBVS.
- Meets GDC 60 by suitably controlling the release of gaseous radioactive effluents to the environment during normal operations. The system directs potentially contaminated building exhaust air to the TBVS system filtration units. Exhaust air from low potential contamination areas is exhausted to the TB vent stack, where it is monitored for radioactive contamination. Exhaust air from high potential contamination areas is filtered using High Efficiency Particulate Air (HEPA) filters before being exhausted to the TB vent stack. The HEPA filters assist in ensuring radioactive material entrained in gaseous effluent will not exceed the limits specified in 10 CFR Part 20, for normal operations and anticipated operational occurrences. TBVS high potential contaminated exhaust subsystems are equipped with HEPA filtration units for localized air cleanup prior to

mixing with the turbine building exhaust (TBE). The local HEPA units are designed, tested and maintained in accordance with RG 1.140. The TBE combined ventilation exhaust is monitored for halogens, particulates and noble gas releases. The TB Compartment area and normal ventilation HVAC Process Radiation Monitoring (PRM) subsystems monitor air for gross radiation levels and alarm functions. The TB is maintained at a slight negative pressure to minimize exfiltration. TB equipment rooms are maintained at a negative pressure to minimize potential airborne radioactivity escaping to adjacent areas or to the outside atmosphere during normal operation by exhausting air through filters from the areas in which a significant potential for contamination exists.

9.4.4.1 Design Bases

Safety Design Bases

The TBVS does not perform or ensure any safety-related function, and thus, has no safety design basis.

The TBVS has RTNSS functions as described in Appendix 19A, which provides the level of oversight and additional requirements to meet the RTNSS functions. Performance of RTNSS functions is assured by applying the defense-in-depth principles of redundancy and physical separation to ensure adequate reliability and availability as described in Subsection 19A.8.3.

Power Generation Design Bases

The TBVS:

- Provides temperature control and air movement control for personnel comfort;
- Optimizes equipment performance by the removal of heat dissipated from plant equipment;
- Provides a sufficient quantity of filtered fresh air for personnel;
- Provides for air movement from areas of lesser potential airborne radioactivity to areas of greater potential airborne radioactivity prior to final exhaust;
- Minimizes the possibility of exhaust air recirculation into the air intake;
- Minimizes the escape of potential airborne radioactivity to the outside atmosphere during normal operation;
- Provides capability to exhaust the smoke, heat and gaseous combustion products in event of a fire;
- Smoke control and removal functions are in accordance with NFPA guidelines in Section 9.5 Fire Protection, Subsection 9.5.1.11, Building Ventilation;
- Maintains the Turbine Building minimum required exhaust capability, as well as the AHUs of the Reactor Component Cooling Water System (RCCWS), Nuclear Island subsystem of the Chilled Water System (CWS) and Instrument Air System (IAS) / Service Air System (SAS) rooms in operation during Loss of Preferred Power (LOPP);

- Provides an adequate level of standby cooling capacity in areas where loss of cooling could cause degraded equipment performance; and
- Chiller mechanical equipment rooms meet ASHRAE-15, Safety Standard for Refrigeration Systems. They are equipped with a dedicated ventilation system and leak detectors with alarms.

9.4.4.2 System Description

Summary Description

Figure 9.4-8 shows the TBVS Simplified System Diagram, Table 9.4-15 lists TBVS Design Parameters and Subsection 9.4.10 describes component information.

The TBVS supplies air from the outside to the Turbine Building non-contaminated areas and removes it from potentially contaminated rooms.

The main stairwells are pressurized to prevent infiltration of smoke from other Turbine Building areas in the event of a fire.

The TBVS is designed to minimize exfiltration by maintaining a slightly negative pressure in the Turbine Building by exhausting more air than is supplied to the Turbine Building. The pressure hereafter called "Slightly Negative Pressure" is a range from less than zero to -124 PaG (-0.50" w.g.).

Exhaust air from potentially high airborne contamination Turbine Building areas or component vents is collected, filtered, and discharged to the atmosphere through the Turbine Building Compartment Exhaust (TBCE) system.

Exhaust air from other (low potential airborne contamination) Turbine Building areas and component vents is exhausted to the atmosphere through the Turbine Building Exhaust (TBE) system.

Turbine Building exhaust air is directed to the TB vent stack where it is monitored for radiation prior to being discharged to the atmosphere.

The TBVS is designed to provide for local air recirculation and cooling in high heat load areas using local AHUs. A minimum of 50% standby cooling capacity is provided in areas where a loss of cooling could cause degraded equipment performance.

Turbine Building ventilation systems and subsystems required for normal plant operation are provided with redundant fans with automatic start logic.

The TBVS equipment is located in the Turbine Building.

The chiller rooms, located in the Turbine Building, meet ASHRAE-15, Safety Standard for Refrigeration Systems. They are equipped with a dedicated purge system and leak detectors with alarms.

Detailed System Description

Turbine Building Air Supply (TBAS) Subsystem

The TBAS consists of outside air intake louvers, dampers, filters, heating coils, chilled water cooling coils, and three 50% capacity supply fans.

Two of the three fans are normally operating to supply filtered, temperature-controlled air to all levels of the Turbine Building. The third fan is a standby unit that starts automatically upon failure of either operating fan. Each supply fan is provided with pneumatically operated isolation dampers. The TBAS uses 100% outside air during normal plant operation.

The TBAS fans are started manually from the MCR. The supply fans are interlocked with the TBVS exhaust fans and TBVS compartment exhaust fans to ensure that the exhaust fans are running before a supply fan is started.

Temperature elements located at the heating and cooling coils air outlet modulate the TBAS air handling heating and cooling coil operation.

Turbine Building Exhaust (TBE) Subsystem

The TBE fans exhaust air from the building clean and low potential contamination areas. The air is exhausted through the monitored vent stack.

The TBE subsystem is provided with three 50% capacity fans. Two fans are normally in operation and one is in automatic standby.

All three TBE fans can be operated simultaneously to provide maximum smoke removal, if necessary.

Each TBE fan is provided with variable speed drives and isolation dampers. A flow controller automatically adjusts the frequency of the operating fans to vary the system airflow rate. Failure of one operating exhaust fan automatically starts the standby fan. The TBVS exhaust fans are interlocked with the TBAS fans.

Turbine Building Compartment Exhaust (TBCE) Subsystem

The TBCE subsystem consists of two 100% capacity exhaust fans, one filter unit and associated controls. One fan is normally in operation with the other one in automatic standby. The subsystem includes a 100% capacity filter bypass duct for purging smoke in the event of a fire.

The air exhausted from the Turbine Building high potential airborne contamination compartments and equipment vents is passed through a filter before it is released to the atmosphere through the TB vent stack, except during smoke removal.

The TBCE subsystem has radiation detectors in the exhaust duct to monitor the air for radioactivity prior to its being discharged to the TB vent stack.

The two exhaust fans are provided with variable frequency drives and isolation dampers. An airflow controller automatically adjusts the speed of the operating fan to vary the system exhaust flowrate. In the automatic mode, loss of flow from the operating fan starts the standby fan.

Turbine Building Lube Oil Area Exhaust (TBLOE) Subsystem

The TBLOE subsystem includes two 100% capacity fans, isolation dampers, low efficiency filters, and exhaust ductwork. The TBLOE fans discharge the exhaust air directly to Turbine Building Exhaust Subsystem. One of the two fans is operated to continuously exhaust at a constant volumetric flow rate from the Turbine Lube Oil Tank Room. A bypass duct is provided around the lube oil exhaust fans for purging high temperature combustion products and limiting room pressurization in the event of a fire in one of the rooms.

Turbine Building Decontamination Room Exhaust (TBDRE) Subsystem

The TBDRE subsystem consists of one air filtration unit, which includes one 100% capacity exhaust fan, filters (high efficiency and HEPA), an isolation damper and associated controls.

The air exhausted from the TBDRE, once filtered, is exhaused by the TBE subsystem and is finally released to the atmosphere through the TB vent stack.

TBVS AHUs and Unit Heaters

Localized AHUs and unit heaters are provided as required in various locations within the Turbine Building. The AHUs are supplied with chilled water from the balance of plant subsystem of the Chilled Water System (CWS) and the unit heaters are electric resistance type heaters. The system provides redundant AHUs to allow operation of associated equipment with a AHU out of service, or to maintain cooling upon the failure of one AHU. The Main Steam Tunnel is provided with two-100% redundant recirculation air handling units.

Temperature controls for the AHUs and unit heaters are located in the unit inlet air path or are installed locally.

The cooling coils of the Reactor Component Cooling Water System (RCCWS), Nuclear Island subsystem of the CWS, selected electrical equipment rooms and Instrument / Service Air System rooms are fed from the corresponding Nuclear Island subsystem of the CWS train.

System Operation

The TBVS is designed to operate during all modes of normal power plant operation, including start-up and shutdown.

Normal Operation

The TBVS fans are started manually and operate automatically thereafter. Standby fans start automatically if one of the running fans trip due to low flow or equipment trip.

Smoke Purge Mode

Upon detection of smoke in the Turbine Building, the TBAS outside air supply fans and the TBE subsystem exhaust fans stop automatically.

During smoke purge operation in the TBCE subsystem, MCR operators bypass the subsystem filters manually.

MCR operators normally initiate the smoke purge mode of operation of the Turbine Building. Smoke purge is accomplished by starting two supply fans in the TBAS and two exhaust fans in the TBE subsystem as well as the TBCE and TBLOE exhaust fans. This provides 100% outside air. All three fans in the TBAS and in the TBE subsystem can be started to provide maximum smoke removal.

Loss of Preferred Power (LOPP)

Upon a LOPP, at least one of the fans of the TBE subsystem remains available for operation because it is powered from the nonsafety-related diesel generators.

The local AHUs of the RCCWS, Nuclear Island subsystem of the CWS and Instrument / Service Air System rooms and selected electrical equipment rooms also remain in operation.

9.4.4.3 Safety Evaluation

The TBVS does not perform any safety-related function.

Where a system is provided with a redundant fan, failure of an operating fan automatically starts the standby fan to maintain continuity of ventilation.

The exhaust air from the TBVS is monitored for radioactivity prior to discharge to the plant vent. Alarms annunciate in the MCR upon detection of high radiation. Section 11.5 describes the Process Radiation Monitoring System.

The TBVS components are designed as Seismic Category NS.

9.4.4.4 Tests and Inspections

All major components are tested and inspected as separate components prior to installation and as integrated systems after installation to ensure design performance. Ductwork system airflows are measured and adjusted to meet design requirements and all instruments are calibrated to the design setpoints. The systems are preoperational tested in accordance with the requirements of Chapter 14.

Periodic inspections and measurements including air flows, water flows, air and water temperatures, filter pressure drops, controls positions, are taken to verify the systems operating conditions and to ensure the integrity of the systems for normal plant operation.

The TBVS exhaust filtration components are periodically tested in accordance with RG 1.140, "Design, Inspection, and Testing Criteria for Air Filtration and Adsorption Units of Normal Atmosphere Cleanup Systems in Light-Water-Cooled Nuclear Power Plants."

9.4.4.5 Instrumentation Requirements

All control actuations, indicators, and alarms for normal plant operation are located in the MCR area. Controls and instrumentation for the TBVS include:

- Heating and cooling temperature elements, controls and alarms for the entering air;
- Low and high temperature signals and alarms for heated and cooled air supply;
- Differential pressure indicators, differential pressure transmitters and alarm for the air filters;
- Supply airflow indicator and controls, alarms and trips for supply fans; and
- Airflow failure signals, alarm and trip for each exhaust fan.

This instrumentation conforms to GDC 13. Refer to Subsection 3.1.2.4 for a general discussion of the GDC.

9.4.4.6 COL Information

None

9.4.4.7 References

The applicable HVAC codes and standards are shown in Table 9.4-17.

9.4.5 Engineered Safety Feature Ventilation System

The Emergency Filter Unit (EFU) portion of the CRHAVS supplies the engineered safety feature for CRHA radiological protection as described in Section 6.4 and Subsection 9.4.1.

9.4.6 Reactor Building HVAC System

The RB HVAC System (RBVS) serves the following areas of the RB:

- The potentially contaminated areas (CONAVS);
- The refueling area (REPAVS);
- The non-radiologically controlled areas (CLAVS); and
- Containment during inerting and de-inerting operations.

Relative to the RBVS, this subsection addresses applicable requirements of General Design Criteria (GDC) 2, 5 and 60. These GDCs are discussed in Standard Review Plan (SRP) 9.4.3. The ESBWR:

- Meets GDC 2 via compliance to the guidance of RG 1.29, Position C.2 for nonsafety-related portions. The RBVS is nonsafety-related except for the building isolation dampers. The RBVS components are designed as Seismic Category II except for the safety-related building isolation dampers and associated controls that are Seismic Category I. The RB is a Seismic Category I structure. The FB penthouse that houses the RBVS equipment is Seismic Category II.
- Meets GDC 5 for shared systems and components important to safety for the RB isolation dampers. The RBVS is not shared among other operating units.
- Meets GDC 60 by suitably controlling the release of gaseous radioactive effluents to the environment. The system may direct its exhaust air to the RB HVAC Online Purge Exhaust Filter Unit during periods of high radioactivity. The RB HVAC Online Purge Exhaust Filter Unit is designed, tested and maintained in accordance with RG 1.140. The RBVS (CONAVS and REPAVS) exhaust subsystems are equipped with control systems to automatically isolate the effluent on indication of a high radiation level. The RB boundary isolation dampers (CONAVS and REPAVS) close on receipt of a high radiation signal, or on a loss of AC power.

9.4.6.1 Design Bases

Safety Design Bases

With the following exception, the RBVS is nonsafety-related. The isolation dampers and ducting penetrating the RB boundary and associated controls that provide the isolation signal are safety-related. The RBVS performs no safety-related function except for automatic isolation of the RB boundary (CONAVS and REPAVS subsystems) during accidents. The RBVS has nonsafety-related RB HVAC Online Purge Exhaust Filter Units for mitigating and controlling gaseous effluents from the RB. The RBVS has nonsafety-related RB HVAC Accident Exhaust Filter Units for use post-accident (>seven days) to create a negative pressure in the RB contaminated areas and exhausting the filtered air to the RB stack. The filtering efficiency ensures that control room doses are not exceeded for certain beyond design basis LOCAs.

The RBVS has RTNSS functions as described in Appendix 19A, which provides the level of oversight and additional requirements to meet the RTNSS functions. Performance of RTNSS functions is assured by applying the defense-in-depth principles of redundancy and physical separation to ensure adequate reliability and availability. In addition, augmented design standards are applied as described in Subsection 19A.8.3.

Power Generation Design Bases

The RBVS:

- Provides a controlled environment for personnel comfort and safety, and for proper operation and integrity of equipment. See Table 9.4-8 for area temperatures maintained.
- Maintains potentially contaminated areas at a negative pressure to minimize exfiltration of potentially contaminated air. See Table 9.4-8 for area pressurization.
- Maintains clean areas of the building, except for the battery rooms, at a positive pressure to minimize infiltration of outside air. See Table 9.4-8 for area pressurization.
- Maintains airflow from areas of lower potential for contamination to areas of greater potential for contamination. The pressure in these areas hereafter called "Slightly Negative Pressure" is a range from less than zero to –124 PaG (-0.50" w.g.).
- Is provided with redundant active components to increase the reliability, availability, and maintainability of the systems.
- Is capable of exhausting smoke, heat and gaseous combustion products in the event of a fire.
- Prevents smoke and hot gases from migrating into other fire areas by automatically closing smoke dampers upon detection of smoke.
- Smoke control and removal functions are in accordance with NFPA guidelines as described in Section 9.5 Other Auxiliary Systems, Subsection 9.5.1.11, Building Ventilation.
- Shuts down during radiological events and isolates the RB boundary (CONAVS and REPAVS subsystems) to prevent uncontrolled releases to the outside atmosphere.
- Provides the ability to draw a negative pressure and exhaust the contaminated ventilation served areas of the RB through the RB HVAC Accident Exhaust Filter Units.
- Provides the capability to manually divert exhaust air for processing through the RB HVAC On-line Purge Exhaust Filter Units.
- Reactor Building HVAC On-line Purge Exhaust Filter Units can be energized to re-circulate the CONAVS area air space.
- Provides pool sweep ventilation air over the refueling area pool surface.
- Maintains its structural integrity after a safe shutdown earthquake.
- Is designed such that failure of the system does not compromise or otherwise damage safety-related equipment.

- Is provided with shutoff dampers on the inlet and outlet of fans and AHUs to allow for maintenance as required.
- Is provided with shutoff valves at the inlet and outlet of cooling coils to allow for maintenance as required.
- Is provided with access doors for AHUs, fans, filter sections, and duct mounted dampers to allow for maintenance as required.
- Is provided with capability for manual control of system fans to facilitate testing and maintenance.
- Maintains the hydrogen concentration levels in the battery rooms below 2% by volume in accordance with RG 1.128.
- Replaces the containment inerted atmosphere with conditioned air during a refueling operation.
- Provides local recirculation AHUs for cooling of the Hydraulic Control Unit area.
- RBVS maintains SLC accumulator room environmental conditions within temperature limits including employing two backup heaters per room. PIP A and PIP B busses provide power for these heaters.
- Provides cooling for CRD and RWCU/SDC pump motors, rooms, and/or electrical/instrument panels designed to limit the room/equipment to within its temperature environmental qualification when the building is isolated. The motor cooler heat sink is the RCCW, while Chilled Water or Direct Expansion Units are provided for electrical cabinet cooling.
- Maintains Battery room temperatures within a range to maximize output and equipment life.

9.4.6.2 System Description

Summary Description

The RBVS maintains space design temperature, quality of air, and pressure control in the RB. The system consists of three subsystems. The RB Contaminated Area HVAC Subsystem (CONAVS) serves the potentially contaminated areas of the RB. The Refueling and Pool Area HVAC Subsystem (REPAVS) serves the refueling area of the RB. The RB Clean Area HVAC Subsystem (CLAVS) serves the clean (non-radiological controlled) areas of the RB.

Detailed System Description

CONAVS

Figure 9.4-10 shows a simplified system diagram for the CONAVS. Table 9.4-11 shows the major equipment for the CONAVS and Subsection 9.4.10 describes component information.

The CONAVS is a two train, once-through ventilation system with each train consisting of an AHU, redundant exhaust fans, and building isolation dampers. It includes a containment purge exhaust fan, recirculation AHUs and unit heaters. The AHU includes filters, heating and cooling coils and redundant supply fans. Outside air is filtered and heated or cooled prior to distribution

by the AHU in service. The Chilled Water System provides cooling for the CONAVS AHUs. The Instrument Air System provides instrument air for the pneumatic actuators. A common supply air duct distributes conditioned air to the potentially contaminated areas of the RB. Air is exhausted from the potentially contaminated areas of the RB by the operating exhaust fan and discharged to the Reactor Building/Fuel Building (RB/FB) vent stack. During containment de-inerting operations the supply airflow rate of the AHU supply fan is increased. At the same time the airflow rate of the exhaust fan is increased an equal amount. In the event of a fire, fire dampers close to isolate the fire area. In the event smoke is detected in the air duct, the system is shut down. After the fire is completely extinguished, the exhaust fans are then used for smoke removal with the exhaust air being monitored for radiological contamination. If contaminated, temporary portable filters may be used to exhaust the contaminated air. The building isolation dampers close and the supply and exhaust fans stop due to high radiation in the exhaust ducts. CONAVS also includes redundant RB HVAC Exhaust Filter Units ("Accident" and "Online Purge" Filter Assemblies) and exhaust fans. During radiological events, exhaust air from contaminated areas may be manually diverted through the RB HVAC Online Purge Exhaust Filter Units. The RB Exhaust Filter Units are equipped with pre-filters, HEPA filters, high efficiency filters and carbon filters for mitigating and controlling gaseous effluents from the RB. The RB HVAC Online Purge Exhaust Filter Units can be used to re-circulate the CONAVS area air and thereby clean up the contaminated environments in the RB.

After a LOCA, one RB HVAC Accident Exhaust Filter Unit (the redundant one is in standby) can be energized to create a negative pressure by exhausting the air in the CONAVS area.

The supply AHU and normal exhaust fan may be shut down during filtered purge exhaust. Recirculation AHUs provide supplementary cooling for selected rooms. Cooling is provided for CRD and RWCU/SDC pump motor coolers from RCCW, and electrical/instrument panels are provided with either Chilled Water or Direct Expansion Units designed to limit the room and associated equipment to within its temperature environmental qualification when the building is isolated. Electric unit heaters provide supplementary heating.

The CONAVS AHUs are located in the FB HVAC Equipment Area. The CONAVS exhaust fans are located in the RB. The RB HVAC Exhaust Filter Units and exhaust fans are located in the RB.

The refueling machine control room recirculating AHU is located in the RB. Electric unit heaters are located in or near the areas they serve.

REPAVS

Figure 9.4-11 shows a simplified system diagram for the REPAVS. Table 9.4-10 shows the major equipment for the REPAVS.

The REPAVS is a once-through ventilation system and consists of an AHU, redundant exhaust fans and building isolation dampers. The AHU includes filters, heating and cooling coils and redundant supply fans. Outside air is filtered and heated or cooled prior to distribution by the AHU in service. The conditioned air is distributed to the refueling area and across the pool surface. Exhaust air is ducted to the exhaust fans and exhausted to the outside atmosphere through the RB/FB vent stack. During a radiological event, exhaust air from the refueling area may be manually diverted through the RB HVAC Online Purge Exhaust Filter Units. The Chilled Water System provides cooling water for the REPAVS AHU. The Instrument Air

System provides instrument air for the pneumatic actuators. In the event of a fire, fire dampers close to isolate the fire area. In the event smoke is detected in the air duct, the system is shut down. After the fire is completely extinguished, the exhaust fans are then used for smoke removal with the exhaust air being monitored for radiological contamination. If contaminated, temporary portable filters are used to exhaust the contaminated air. The building isolation dampers close and the supply and exhaust fans stop due to high radiation in the exhaust ducts.

The REPAVS AHU is located in the FB HVAC Equipment Area. The REPAVS exhaust fans are located in the RB. Electric unit heaters are located in or near the areas they serve.

CLAVS

Figure 9.4-9 shows a simplified system diagram for the CLAVS. Table 9.4-9 shows the major equipment for the CLAVS.

The CLAVS is a two train, recirculating ventilation system with each train consisting of an AHU and redundant return/exhaust fans. The AHU includes filters, heating and cooling coils and redundant supply fans. A mixture of outside and return air is filtered and heated/cooled prior to distribution by the AHU in service. A common supply and return/exhaust air duct system distributes conditioned air to and from the RB clean areas. Return air not directed back to the AHU is exhausted directly outdoors. An economizer cycle is used, when outside air conditions are suitable, to reduce mechanical cooling operating hours. The economizer cycle provides all outside air, or a mixture of outside air and return air, to RB clean areas. The temperature of the air provided is at or below the supply air design temperature. In the event of a fire, fire dampers close to isolate the fire area. In the event smoke is detected in the air duct, the system is shut down. After the fire is completely extinguished, the CLAVS exhaust fans are then used for smoke removal. The Chilled Water System provides cooling for the CLAVS AHU. The Instrument Air System provides instrument air for the pneumatic actuators. Electric unit heaters provide supplementary heating. The CLAVS AHU supplies air to the battery rooms. A minimum exhaust air is continuously extracted from battery rooms in order to keep hydrogen concentration below 2%. This extracted air is exhausted from the battery rooms by the battery room exhaust fans which discharge directly to the RB/FB vent stack. Battery room temperature is maintained within a range to maximize output and equipment life. Battery room hydrogen indication and loss of ventilation alarm functions are provided.

The CLAVS AHUs and return/exhaust fans are located in the FB HVAC Equipment Area. The electric unit heaters are located in or near the areas they serve.

System Operation

The RBVS operates during normal power plant operation, plant startup, and plant shutdown. It is not required to operate during a Station Blackout.

CONAVS

During normal operation, each train of CONAVS operates with the AHU and one exhaust fan in service. The exhaust fan starts first to establish negative pressure in the areas served. Then the AHU supply fan starts. Failure of an operating supply or exhaust fan automatically energizes the standby fan and de-energizes the failed fan. The CONAVS AHU supply fan is de-energized due to a loss of room negative pressure. The AHU supply fan is re-energized upon reestablishment of room negative pressure.

Before and during personnel entry into the containment area, the CONAVS is used to de-inert the containment. The CONAVS AHU supply fan provides purge supply air to containment while the containment purge exhaust fan exhausts air from containment. On detection of high radiation in the exhaust air by PRMS, supply and exhaust dampers to containment are automatically closed. During inerting operation, the CONAVS exhausts air from containment while the Containment Inerting System supplies nitrogen to the containment.

REPAVS

During normal operation, the REPAVS operates with the AHU and one exhaust fan in service. The exhaust fan starts first to establish negative pressure in the areas served. Then the AHU supply fan starts. Failure of an operating supply or exhaust fan automatically energizes the standby fan and de-energizes the failed fan. The REPAVS AHU supply fan is de-energized due to a loss of room negative pressure. The AHU supply fan is re-energized upon reestablishment of room negative pressure.

CLAVS

During normal operation, each train of CLAVS operates with the AHU and one return/exhaust fan in service. When outside air conditions are suitable, the CLAVS incorporates an economizer cycle to reduce operating hours for mechanical cooling equipment. Failure of an operating supply or return/exhaust fan automatically energizes the standby fan and de-energizes the failed fan. The return/exhaust fan is de-energized due to a loss of room pressurization. The return/exhaust fan is re-energized upon reestablishment of room positive pressure.

Following a fire recovery, return/exhaust fans are used to remove smoke from the area by exhausting to the outdoors.

9.4.6.3 Safety Evaluation

The RBVS is nonsafety-related, except for the building isolation dampers. The safety-related isolation dampers fail closed upon a loss of control signal, power, or instrument air.

The RBVS components are designed as Seismic Category II, except for the safety-related building isolation dampers and associated controls. The building isolation dampers and associated controls are designed as Seismic Category I.

The RBVS does not perform any safety-related functions, except for the CONAVS and REPAVS subsystem boundary isolation dampers closing in the event of radiological events. The CLAVS subsystems is also provided with safety-related building isolation dampers, which close upon Loss of Power or Loss of Instrument Air. Redundant dampers and controls are provided so the RB can be isolated even if one of the dampers or controls fail.

Rooms containing safety-related equipment have passive cooling features designed to limit the room temperature to the equipment's environmental qualification temperature.

RBVS maintains SLC accumulator room environmental conditions within temperature limits.

The Non-safety Related, RB HVAC Accident Exhaust Filter Units provide the ability to draw a negative pressure on the contaminated ventilation served areas of the RB post-accident (>seven days). These accident units are RTNSS components.

The Non-safety Related, RB HVAC Online Purge Exhaust Filter Units provide online cleanup of contaminated areas within the CONAVS or REPAVS subsystems. These online units are not RTNSS components.

9.4.6.4 Testing and Inspection Requirements

Routine testing of the RBVS is conducted in accordance with normal power plant requirements for demonstrating system and component operability. Periodic surveillance testing of safety-related building isolation dampers is carried out per IEEE-338.

The RB HVAC ("Accident" and "Online" Purge) Exhaust Filter components are periodically tested in accordance with RG 1.140, Design, Inspection, and Testing Criteria for Air Filtration and Adsorption Units of Normal Atmosphere Cleanup Systems in Light-Water-Cooled Nuclear Power Plants. There is an additional requirement that charcoal laboratory testing will be performed on the RB HVAC Accident Exhaust Filter Unit after each 1440 hours of operation, because RG 1.140 does not specify a time based charcoal testing frequency. The RB HVAC Online Purge Exhaust Filter Units will be tested on a 4-year frequency. The RTNSS RB HVAC Accident Exhaust Filter Units will additionally be operationally tested each month by running each filter unit for 15 minutes as is recommended in RG 1.52 Rev. 3.

9.4.6.5 Instrumentation Requirements

The RBVS is operated from the MCR. A local run/stop control switch is provided for each fan for maintenance and testing purposes. The RBVS is manually controlled, except for certain automatic operations described below:

- Reactor Building boundary isolation dampers for the CONAVS and REPAVS subsystems close on receipt a high radiation signal or on a loss of AC power. There is no automatic high radiation isolation signal for the CLAVS subsystem. As stated in Section 11.5, radiation monitors of the PRMS which initiate automatic building isolation are:
  - Reactor Building HVAC Exhaust (CONAVS)
  - Refuel Handling Area HVAC Exhaust (REPAVS)
- For systems with redundant fans, the lead fan is selected manually. The standby fan automatically starts upon indication of low flow in the associated discharge duct.
- Fan operation is allowed only when the corresponding fan shutoff dampers are open.
- The CLAVS return/exhaust fan auto starts after the supply fan starts and the ventilated spaces are at a positive pressure.
- Differential pressures between the ventilated spaces and the outside are transmitted to a pressure controller. The controller adjusts the CLAVS return/exhaust fan speed that modulates airflow to maintain the ventilated spaces at a positive pressure.
- A temperature controller modulates the CLAVS outside, return and exhaust air dampers when outside air temperatures are below design supply air temperatures. Damper modulation provides a mixture of outside and return air at or below design supply air temperatures to the ventilated spaces.

- The CONAVS supply fan auto starts after the exhaust fan starts and a negative pressure has been established in the ventilated spaces.
- Differential pressures between the ventilated spaces and the outside are transmitted to a pressure controller. The pressure controller adjusts the CONAVS exhaust fan speed that modulates exhaust airflow to maintain a negative pressure.
- When a recirculating AHU is started, the fan runs continuously. A room thermostat automatically modulates the chilled water supplied to the cooling coil to maintain the room temperature.
- Local thermostats automatically start the unit heaters in rooms served by CLAVS and CONAVS.
- The RBVS component operating status and system parameters are monitored and indicated in the MCR and locally where required.

Indications and alarms include the following:

- Indicators for system operating parameters, including flow rates, control damper position, filter pressure drop, building pressure with respect to atmospheric, temperatures, battery room hydrogen concentration.
- Alarms for high or low conditions, including airflow rates, temperatures, filter pressure drop, building differential pressure, smoke detection, and high battery room hydrogen concentration.

This instrumentation conforms to GDC 13. Refer to Subsection 3.1.2.4 for a general discussion of GDC 13.

9.4.6.6 COL Information

None

9.4.6.7 References

The applicable HVAC codes and standards are shown in Table 9.4-17.

9.4.7 Electrical Building HVAC System

The Electrical Building HVAC System (EBVS) consists of the following subsystems:

- Electric and Electronic Rooms (EER) HVAC Subsystem (EERVS)
- Technical Support Center (TSC) HVAC Subsystem (TSCVS)
- Diesel Generators (DG) HVAC Subsystem (DGVS)

Regarding the ESBWR nonsafety-related EBVS, this subsection addresses the applicable requirements of the General Design Criteria (GDC) 2, 4, 5, 19 and 60 discussed in Standard Review Plans (SRP) 9.4.1 and 9.4.3. The ESBWR:

- Meets GDC 2 via compliance with the guidance of RG 1.29, Position C.2 for nonsafety-related portions. The EBVS does not perform any safety-related function. The EBVS

components are designated as Seismic Category NS. The Electrical Building is nonsafety-related and Seismic Category NS.

- Meets GDC 4. While the TSC ventilation system is not specified in SRP 9.4.1, the ESBWR design is committed to providing a TSC that maintains environmental conditions in the TSC compatible with the design limits of equipment located therein.
- Meets GDC 5 for shared safety-related systems and components. The ESBWR does not share any safety-related structure, system or component with any other unit.
- The ESBWR design complies with the requirements of NUREG-0696, which requires the TSC to supply the same level of radiological protection as that supplied to the MCR under GDC 19.
- Meets GDC 60 because the EER, TSC and DG HVAC Systems have no source of radioactive materials in either particulate or gaseous form. The exhaust systems have no provision for filtration or adsorption because these areas are clean.

9.4.7.1 Design Bases

Safety Design Bases

The EBVS does not perform or ensure any safety-related function, and thus, has no safety design basis.

The EBVS has RTNSS functions as described in Appendix 19A, which provides the level of oversight and additional requirements to meet the RTNSS functions. Performance of RTNSS functions is assured by applying the defense-in-depth principles of redundancy and physical separation to ensure adequate reliability and availability as described in Subsection 19A.8.3.

Power Generation Design Bases

The EERVS:

- Provides conditioned air to maintain acceptable temperatures for equipment and personnel comfort and habitability;
- Provides a sufficient quantity of filtered fresh air for personnel;
- Maintains battery room temperatures within a range to maximize output and equipment life;
- Maintains the hydrogen concentration levels in the nonsafety-related battery rooms below 2% by volume in accordance with RG 1.128;
- Smoke control and removal functions are in accordance with the applicable NFPA guidelines specified in Section 9.5 Fire Protection, Subsection 9.5.1.11 Building Ventilation;
- The onsite diesel generators provide electrical power to the EERVS in case of a Loss of Preferred Power (LOPP); and
- EBVS provides the post 72-hour cooling for safety-related electrical distribution and support for electrical power to FAPCS.

The TSCVS:

- Provides a controlled environment for personal comfort and safety and for the proper operation and integrity of equipment in the TSC;
- Maintains the TSC at a slightly positive pressure with respect to the adjacent rooms and outside environment to minimize the infiltration of air;
- Detects and limits the introduction of airborne hazardous materials (radioactivity or smoke) into the TSC;
- Contains nonsafety–related filter units;
- Removes vitiated air from the kitchen and restrooms;
- Redundant components are included to increase the reliability, availability and maintainability of the ventilation system; and
- The onsite diesel generators provide electrical power to the TSCVS in case of Loss of Preferred Power (LOPP).

The DGVS:

- Provides ventilation air to maintain acceptable temperatures within the generator rooms for equipment operation and reliability during periods of diesel generator operation;
- Provides adequate heating and ventilation for suitable environmental conditions for maintenance personnel working in the diesel generator room when the generators are not in operation;
- Provides suitable environmental conditions for equipment operation in each diesel generator electrical and electronic equipment area under the various modes of diesel generator operation;
- Prevents the accumulation of combustible vapors and dissipate their concentration in the fuel oil day tank room; and
- The onsite diesel generators provide electrical power to the DGVS in case of a Loss of Preferred Power (LOPP).

9.4.7.2 System Description

Summary Description

Figure 9.4-12 shows the EBVS simplified system diagram; Table 9.4-16 lists the EBVS major equipment and associated Design Parameters; and Subsection 9.4.10 describes component information. All the EBVS equipment is located in the Electrical Building.

EERVS

The EERVS provides a controlled environment for the Electrical Building switchgear, electronic and nonsafety-related battery rooms.

The EERVS consists of two independent HVAC trains. One train serves the A electric and electronic equipment rooms while the other train serves the B electric and electronic equipment rooms. Each EERVS train is a recirculation ventilation system to provide heated or cooled air to the EER. Each train includes two redundant Air Handling Units (AHUs) each with a filter bank,

electric coils, water cooling coils, and a fan. Building air is returned/exhausted by two redundant fans. Dedicated exhaust fans are provided for the battery rooms.

TSCVS

The TSCVS is a recirculating ventilation system to provide filtered conditioned air to the TSC. Two redundant Air Filtration Units (AFUs) with supply fans, high efficiency particulate air (HEPA) filters and charcoal filters remove radioactive materials when required. The TSCVS filter units are defense-in-depth components and provide the function of filtration for the TSC during conditions of abnormal airborne radioactivity when power is available. Since RG 1.140 applies specifically to normal atmosphere cleanup, and since the filter units are not credited ESF units per RG 1.52, the Codes and Standards that dictate the testing requirements of a filtration system designed for habitability are described. The specific tested and credited filtration efficiencies meet or exceed the guidance in RG 1.140. The AFUs provide fresh air to the TSC to augment the return air to maintain the TSC under slight positive pressure. The pressure hereafter called "Slightly Positive Pressure" is a range from greater than zero to +124 PaG (+0.50" w.g.). The TSCVS automatically switches to the recirculation mode if smoke is detected in the outside intake air. In this case, there may be no differential pressure between the TSC and the surrounding areas. The recirculating AHU system includes redundant air handling units (with fans, air mixing plenum, filters, heating and cooling coils, and humidifier) to provide conditioned air through ducts, dampers, and registers to the TSC. The exhaust system includes redundant fans to direct the air from the kitchen and toilet areas into the atmosphere.

DGVS

The normal heating and ventilating system of the DGVS serves the diesel generator area. Each diesel generator train is provided with independent ventilation and heating equipment for the building areas serving that diesel generator train. Each normal heating and ventilating subsystem for a diesel generator consists of one 100% capacity engine room AHU which ventilates the diesel generator room and the diesel fuel oil day tank room.

The supplementary ventilation system of the DGVS consists of roof-mounted exhaust fans and air intake dampers mounted on the exterior walls of each diesel generator area. The DGVS electronic equipment area cooling system consists of an AHU with a filter, a cooling coil and the associated fan. Independent AHUs serve each of the diesel generator areas.

System Operation

Normal Operating Mode

EERVS

One of the two supply AHUs in each train is normally operating to supply filtered, temperature-controlled air to the Electrical Building. The second supply AHU is a standby unit that starts automatically upon failure of the operating AHU. One of the two air return/exhaust fans of each train is also operating. The second return/exhaust fan is a standby unit that starts automatically upon failure of the operating fan. Each fan is provided with backdraft isolation dampers. The EERVS uses 100% outside air when the outside air temperature is moderate to maintain the minimum operating cost. The EERVS modulates the intake, return and exhaust air dampers to minimize the energy used for either cooling by the Chilled Water System or heating by electric

heating elements. In extreme outside air temperature conditions (either high or low), the outside air intake dampers are at their minimum position.

The battery rooms are maintained at an optimum temperature to maximize output and equipment life. A minimum exhaust air is continuously extracted from battery rooms in order to keep hydrogen concentration below 2% by volume in accordance with RG 1.128.

Temperature is monitored at the heating and cooling coils to ensure air outlet conditions are properly maintained.

TSCVS

During normal operation, outside air is drawn into the AHU where it is filtered and conditioned then discharged by supply fans to TSC areas. General rooms and area return air is recirculated to the AHU. Ventilation air is exhausted from the kitchen and restrooms by roof fans.

The AFU fans do not operate during normal operation. The TSCVS automatically transfers from its normal operation mode to its radiological mode upon detection of radioactivity at the outside air intakes. The TSCVS automatically switches to the recirculation mode if smoke is detected in the outside intake air.

DGVS

During normal operation, the diesel generators are on stand-by and electronic equipment is energized. Outside or recirculated room air is filtered and heated (when required) in the AHU, then supplied to general areas, electronic equipment areas and the diesel oil day tank. Exhaust air from general areas is discharged outdoors.

The electronic equipment AHU recirculates and cools the air of the electronic equipment areas to control the temperature.

The supplementary ventilation system starts automatically whenever the generator is started. The roof fans operate automatically to maintain room temperature.

Smoke Removal Operating Mode

If smoke is detected in the return air ductwork for the EERVS or TSCVS, or in the DG AHU main supply ductwork, the respective supply AHU and exhaust fan/power roof ventilators stop automatically. If smoke is detected in the associated outside air intakes for the EERVS or TSCVS the respective intake isolates and the TSC AFU shuts down if running. If smoke is detected just downstream of the operating EER or TSC AHU/AFU, the respective unit shuts down and the standby unit starts automatically. Once the fire has been extinguished, smoke removal operation is initiated manually by restarting fans as needed from the MCR.

Radiological Event Operation (TSCVS only)

Upon detection of outside air high radiation signal an AFU starts and aligns automatically to the AHU return ductwork. The signal also closes the AFU bypass damper and the exhaust air dampers.

9.4.7.3 Safety Evaluation

The EBVS does not perform or ensure any safety-related function.

The EBVS components are designed as Seismic Category NS.

Where a system is provided with a redundant device, failure of an operating device automatically starts the standby device to maintain continuity of ventilation.

The intake air is monitored for radioactivity and filtered (if required) prior to being introduced in the Technical Support Center. Filter efficiencies meet or exceed the guidance of RG 1.140.

9.4.7.4 Testing and Inspection Requirements

Major components are tested and inspected as separate components prior to installation and as integrated systems after installation to ensure design performance. Ductwork system airflows are measured and adjusted to meet design requirements and instruments are calibrated to the design setpoints. The systems are preoperational tested in accordance with the requirements of Chapter 14.2.8.

Periodic inspections and measurements including air flows, water flows, air and water temperatures, filter pressure drops, controls positions, are taken to verify the systems operating conditions and to ensure the integrity of the systems for normal plant operation.

The EBVS filtration components are periodically tested in accordance with ASME AG-1, Code On Nuclear Air And Gas Treatment to meet the requirements of RG 1.140.

9.4.7.5 Instrumentation Requirements

All control actuations, indicators, and alarms for normal plant operation are located in the MCR. Controls and instrumentation for the EBVS include:

- Heating and cooling temperature indicators, controls and alarms for the entering mixed air and recirculated air;
- Low and high temperature sensors and alarms for heated and cooled air supply and Battery room area;
- Differential pressure transmitters to monitor filters pressure drop, and alarm high filter pressure drop;
- Airflow indicators, controls, alarms and trips for each supply fan;
- Airflow failure sensor and alarm for each exhaust fan;
- Differential pressure transmitters to monitor and control positive pressure of the TSC with respect to the surrounding areas;
- Radiation and smoke detection for the TSCVS outside air intake; and
- Battery room hydrogen sensors and high hydrogen concentration alarm.

This instrumentation conforms to GDC 13. Refer to Subsection 3.1.2.4 for a general discussion of the GDC.

9.4.7.6 COL Information

None

9.4.7.7 References

The applicable HVAC codes and standards are shown in Table 9.4-17.

9.4.8 Drywell Cooling System

Regarding the ESBWR nonsafety-related Drywell Cooling System (DCS), this subsection addresses the applicable requirements of the General Design Criteria (GDC) 2, 5 and 60, discussed in Standard Review Plan (SRP) 9.4.3. The ESBWR:

- Meets GDC 2 via compliance with the guidance of RG 1.29, Position C.2 for nonsafety-related portions. The DCS is classified as nonsafety-related and Seismic Category II.
- Meets GDC 5 for shared systems and components important to safety. The ESBWR does not share any safety-related structure, system or component with any other unit.
- Meets GDC 60 by suitably controlling the release of gaseous radioactive effluents to the environment. During normal operation, the DCS re-circulates air with no connection to any HVAC system outside containment. Only during Drywell (DW) purge operations, is the containment air connected with the CONAVS subsystem of RBVS. During DW purge operations, the containment purge fan can be used to discharge containment air to the CONAVS subsystem. The CONAVS system has RB HVAC Purge Exhaust Filter Units that are designed, tested and maintained in accordance with RG 1.140.

9.4.8.1 Design Basis

Safety Design Bases

The Drywell Cooling System has no safety-related function, and thus, has no safety design basis.

Power Generation Design Bases

The Drywell Cooling System (DCS) is classified as a nonsafety-related and Seismic Category II system. The DCS performs the following functions during stable and transient operating conditions through the entire operating range, from startup to full load condition to refueling:

- Maintain temperature in the upper and the lower drywell spaces within specified limits during normal operation;
- Accelerate drywell cooldown following a Loss of Preferred Power (LOPP) during the period from hot shutdown to cold shutdown;
- Aid in complete purging of nitrogen from the drywell during shutdown;
- Maintain a habitable environment for plant personnel during plant shutdowns for refueling and maintenance; and
- Limit drywell temperature during LOPP.

Tables 9.4-12, 9.4-13 and 9.4-14 contain the DCS design parameters.

9.4.8.2 System Description

Summary Description

The DCS maintains the thermal environment within the drywell to specified conditions during normal reactor operation, hot standby and refueling using Fan Cooling Units (FCUs). The cooling medium of the FCUs is Chilled Water System (CWS) water. There are separate FCUs for the upper and the lower drywell regions.

Figure 9.4-13 shows a simplified DCS diagram, Subsection 9.2.7 describes the CWS and Subsection 9.4.10 describes component information.

Detailed System Description

The DCS is a closed loop recirculating air/nitrogen cooling system with no outside air/nitrogen introduced into the system except during refueling. The system uses direct-drive type FCUs, with variable frequency drives, to deliver cooled air/nitrogen to various areas of the upper and the lower drywell. Ducts distribute the cooled, recirculated air/nitrogen through diffusers and nozzles. The FCUs and the fans are redundant.

The drywell heat loads are transferred to the CWS through the cooling coils of the FCUs. The DCS consists of four FCUs, two located in the upper drywell and two in the lower drywell.

During normal plant operating conditions, one fan in each upper drywell FCU is in operation. In this configuration, 50% of upper drywell design heat load is accommodated by each FCU. Each FCU comprises a cooling coil and two fans downstream of the coil. One of the fans operates while the other is in standby. The fan on standby automatically starts upon loss of the lead fan in each FCU. Upon loss of one FCU, both fans in the affected unit are secured and the fans in the remaining FCU are started or continue to operate. During this upset operation, the cooling capacity of the operating FCU increases to twice its normal capacity, with double the airflow, however with an increase in the ambient temperature.

Cooled air/nitrogen leaving the upper FCUs enters a common plenum and is distributed to the various zones in the upper drywell through distribution ducts. Return ducts are also provided. The upper FCUs draw air/nitrogen directly from the upper drywell.

During normal plant operating conditions, one fan in each lower drywell FCU is in operation. In this configuration, 50% of the lower drywell design heat load is accomodated by each FCU. Each FCU comprises a cooling coil and two fans downstream of the coil. One of the fans operates while the other is in standby. The fan on standby automatically starts upon loss of the lead fan in each FCU. Upon loss of one FCU, both fans in the affected FCU are secured and the fans in the remaining FCU are started or continue to operate. During this upset operation, the cooling capacity of the operating FCU increases to twice its normal capacity, with double the airflow, however with an increase in the ambient temperature.

Cooled air/nitrogen is supplied below the RPV and in the RPV support area through supply ducts. Return ducts are also provided. The lower FCUs draw air/nitrogen directly from the lower drywell.

Each FCU has a condensate collection pan. The condensate collected from the FCUs in the upper and the lower drywell is piped to a Leak Detection and Isolation System (LD&IS) flowmeter to measure the condensation rate contribution to unidentified leakage.

The CWS piping penetrates the containment at two independent locations, redundantly. The system is designed so both FCUs in the upper drywell and both FCUs in the lower drywell are always operating during normal plant operation even upon failure of any single FCU motor or fan. Upon failure of one FCU, the two fans of the remaining FCU are in service. One FCU with two fans in operation maintains the drywell temperature below the maximum allowed.

Table 9.4-13 provides a description of the upper DCS and lower DCS FCUs. Table 9.4-14 provides a summary of the drywell heat loads.

The FCU variable frequency drive motors are designed to operate during containment integrated leak rate testing (ILRT).

System Operation

During normal plant operating condition, two FCUs in the upper drywell and two FCUs in the lower drywell are continuously operating (with one fan in service per FCU) to maintain the ambient conditions described in Table 9.4-12.

During plant refueling conditions, one FCU in the upper drywell and one FCU in the lower drywell continuously operate with two fans in service to maintain a habitable environment in the drywell for maintenance activities.

Nonsafety-related onsite diesel generators power the FCUs during a LOPP.

9.4.8.3 Safety Evaluation

The DCS does not perform any plant safety-related function. Failure of the system does not compromise any safety-related system or component nor does it prevent safe shutdown of the plant.

9.4.8.4 Testing and Inspection Requirements

The FCU coils are tested for pressure integrity in conjunction with the CWS after the installation is completed.

The ducts have test connections for verifying calibration of operating controls.

9.4.8.5 Instrumentation Requirements

Each FCU motor can be controlled manually from the MCR. Indicating lights in the MCR display the status of each unit. Failure of an FCU and a subsequent temperature rise in the discharge stream activates an alarm in the MCR. The condensate discharge flow from the upper and lower drywell air coolers is provided to LD&IS for monitoring and alarming.

A flow switch is provided at each fan discharge. The standby fan automatically starts upon failure of a fan. Failure of a fan activates an alarm in the MCR.

Preset flow reducing devices are provided in the supply ducts so that, regardless of which FCUs are operating, the air/nitrogen distribution requirements are met. Backdraft dampers prevent reverse flow through a unit that is not operating.

There are temperature instruments for measuring the temperatures of the supply and return air/nitrogen to each FCU.

This instrumentation conforms to GDC 13. Refer to Subsection 3.1.2.4 for a general discussion of the GDC.

9.4.8.6 COL Information

None

9.4.8.7 References

The applicable HVAC codes and standards are shown in Table 9.4-17.

9.4.9 Containment Inerting System

See Subsection 6.2.5.2 for Containment Inerting System (CIS) description and design.

9.4.10 HVAC Component Information

9.4.10.1 Filtration

Low, Medium and High Efficiency Filters

The various building filtration level is specified within each specific subsection. Filters meet the applicable efficiency rating as stated below.

American Society of Heating, Refrigerating and Air Conditioning Engineers (ASHRAE) Standard 52.2 establishes a filter's Minimum Efficiency Reporting Value (MERV) and Standard 52.1 establishes a filter's Average Atmospheric Dust Spot Efficiency. The following ASHRAE filter classifications are MERV specified (with Dust Spot Efficiency in parenthesis) below:

- Low Efficiency: MERV 1-4 (Less than 20%)
- Medium Efficiency: MERV 5-12 (As least 20% but less than 80%)
- High Efficiency: MERV 13-16 (Greater than or equal to 80%)

HEPA Filters

HEPA (High Efficiency Particulate Air) Filters are specified for various building filtration systems. Filters meet the applicable efficiency rating as stated below.

Filters with efficiency greater than MERV 16 by ASHRAE Standard 52.2 (MERV 17-20) are usually rated by the DOP (dioctylphthalate) test method. This test is based on the ability of a filter to remove an aerosol consisting of 0.3 micrometer (micron) particles of a test challenge. HEPA filters are extended-medium dry-type filters in a rigid frame, having minimum particle-collection efficiency of 99.97% on 0.3 micron particles which meets ASME AG-1, Code on Nuclear Air and Gas Treatment, Section FC, HEPA Filters.

HEPA filters are constructed, qualified and tested per UL-586, High Efficiency, Particulate, Air Filter Units.

Carbon Adsorbers

Carbon Adsorber are constructed and tested per ASME AG-1 Section FE. They are single assembly, welded construction and conform to IE Bulletin 80-03. Carbon for adsorption filters is

tested per ASTM D3803 to meet the requirements of RG 1.52 for ESF systems and RG 1.140 for Non-ESF systems.

General

Guidance for the design, installation, operation, and maintenance of air filtration systems is per the National Air Filtration Association Manual.

Air Handling Units

Each air handling unit consists of an inlet area, filters (as specified by the system), heating elements (coils), cooling coils (as required) and the respective fans (supply or exhaust). The Air-Cleaning Units and Components are designed in accordance with ASME/ANSI AG-1-2003 Code on Nuclear Air and Gas Treatment.

9.4.10.2 Supply and Exhaust Fans

The various building ventilation systems are provided with supply and exhaust fans. These fans are either centrifugal or axial fans depending on the suitability to the specific system. The fans are designed, manufactured and supplied in accordance with the standards of AMCA (Air Movement and Control Association International). Fans in various areas are equipped with Variable Frequency / Speed Drive mechanisms to control airflows for the specific system application. See Table 9.4-17 for applicable codes and standards.

9.4.10.3 Heating Coils/Elements

Various Air Handling Units are equipped with electrical heating coils/elements. Electric coils are designed and supplied to the requirements of UL-1995, Heating and Cooling Equipment. The use of a Heat Reclamation System may be employed for those 100% outside air systems to reduce or eliminate the use of purely resistance heating coils/elements. This system entails recovering heat from the building exhaust air for use in preheating the supply / outside air. Typical systems use secondary water-air coils (in both the supply and exhaust ductwork) and a closed recirculation water loop with electric supplemental heat provided on an atmospheric expansion tank.

9.4.10.4 Cooling Coils

The Tubular fin type cooling coils are designed, constructed and installed in accordance with ASHRAE 33, Methods of Testing Forced Circulation Air Cooling and Air Heating Coils, and ANSI/ARI 410 and UL-1995.

Cooling coil condensate is collected in drain pans within the air handler units with the drain pan discharge (condensate) routed to a floor drain located within the room. These floor drains connect to the applicable EFDS subsystem. Depending upon the building, the air conditioning and ventilation subsystem, and type of system (once-through or recirculation), the cooling coil condensate is routed to one of the following waste streams, as described in Subsection 9.3.3:

- High Conductivity Waste (HCW) drain subsystem
- Low Conductivity Waste (LCW) drain subsystem
- Clean Drain Subsystem

9.4.10.5 Dampers

Isolation, Control (Vortex), Backdraft and Balancing Dampers

Dampers are designed and specified in accordance with AMCA 502, Damper Application Manual. These dampers include isolation, balance, backdraft, and modulating control types.

Fire / Smoke Dampers

The combination Fire and Smoke Dampers in the various systems meet the design, leakage testing, and installation requirements of UL-555(S) Fire Dampers (Smoke Dampers), and AMCA 503, Fire, Ceiling (Radiation), Smoke and Fire / Smoke Dampers Application Manual.

9.4.10.6 Ductwork and Accessories

Ductwork, duct supports and accessories are constructed of galvanized steel. The ductwork including supports is constructed to meet the design and construction requirements of SMACNA (Sheet Metal & Air Conditioning Contractors' National Association). The support guidance of AISI-2001 and 2004 Supplement, American Iron and Steel Institute Specification for the Design of Cold Formed Steel Structural Members is also employed in the design. The structural requirements for HVAC Ducts and HVAC Duct Supports are also specified in Subsection 3.8.4.1.7 for seismic ductwork. See Table 9.4-17 for list of applicable HVAC codes and standards.

9.4.10.7 COL Information

None

9.4.10.8 References

None

Table 9.4-1

Design Parameters for the CBVS

CRHAVS and CBGAVS		
Operating periods:	Normal plant operation, plant startup, and plant shutdown	
Outside Air Design Conditions:		
For CRHAVS and EFUs (Limiting values)	Summer:	47.2°C (117°F) Dry Bulb 26.7°C (80°F) Wet Bulb (Coincident)
	Winter:	-40.0°C (-40°F) Dry bulb
For CBGAVS: (1% Exceedance values)	Summer:	37.8°C db (100°F) 26.1°C wb (79°F) (coincident),
	Winter:	-23.3°C (-10°F) Dry bulb
Inside Design Temperatures and Humidity:		
CRHA (normal operation)	21.1°C (70°F) to 23.3°C (74°F) and 25% to 60% relative humidity (RH)	
CRHA (Loss of normal AC power)	Maximum 33.9°C (93°F) temperature for the first 72 hours into the event, RH not controlled	
DCIS Rooms/Miscellaneous Areas	18.3°C (65°F) to 25.6°C (78°F), RH not controlled	
Safety-Related DCIS Rooms (Loss of normal AC power)	50°C (122°F) maximum	
HVAC Equipment Room:	10°C (50°F) to 40°C (104°F), RH not controlled	
Pressurization:	CBGAVS > atmospheric pressure CRHAVS > 31 PaG (1/8" w.g.) positive differential	
CBGAVS	18.3°C (65°F) to 25.6°C (78°F), RH not controlled	
CRHAVS Breathing Air Supply Capacity:	10.5 l/s (22 cfm) per person for up to 21 persons (220 l/s or 466 cfm total) for 72 hours . Note: CRHA heatup analysis assumes 11 control room occupants for CRHA thermal loading (Table 3H-12)	

Table 9.4-2

Major Equipment for CBVS

CRHAVS		
Recirculation Air Handling Units	Quantity:	2 - 100% capacity each
	Capacity:	Flow – 5,250 l/s (11,125 cfm) per unit
		Cooling ≤ 100 kW
		Heating approximately 18 kW (61,420 Btu/hr) at Limiting Values approximately 14 kW (47,770 Btu/hr) at 1% Exceedance
	Type	Precision floor mounted downflow containing medium efficiency filters, chilled water cooling coil, auxiliary cooling coil, electric heating coil, humidifier and centrifugal fans
CRHAVS Outside Air Fan System		
Filter Enclosure Unit	Quantity:	1 – 100% capacity
	Filters:	Medium efficiency filters
Supply Fans	Quantity:	2 – 100% capacity each
	Flow:	270 l/s (572 cfm) per unit
CRHAVS Smoke Purge Fan	Quantity:	1-100% capacity
	Capacity:	Flow – 5000 l/s (10600 cfm)
		Heating – approximately 206,000 watts (703,000 btu/hr) at 1% exceedance
CRHAVS EFU		
Emergency Filter Unit	Quantity:	2 - 100% capacity each
	Capacity:	Flow – 220 l/s (466 cfm) per unit
	Type:	Metal housing containing medium efficiency filter, HEPA filter, carbon filter, and post filter
	Efficiency :	99% credited removal for HEPA and 99% credited removal for carbon filter per RG 1.52
	Differential Pressure	500 PaG (2.0” w.g.) maximum

Table 9.4-2

Major Equipment for CBVS (Continued)

CRHAVS (Continued)		
EFU fans	Quantity:	2 - 100% capacity each per EFU
	Capacity:	Flow – 220 l/s (466 cfm) per unit
	Type	Centrifugal, ≤ 1.1 kW (1.5 hp)
Auxiliary Cooling Unit	Quantity	2 – 100% capacity each
	Capacity	Cooling < 78 kW
Restroom Exhaust Fan	Quantity:	1 - 100% capacity
	Capacity:	Flow - 50 l/s (106 cfm) per unit
	Type	In-line centrifugal
CRHA Isolation Dampers	Quantity	16 Total, EFU outside air supply, normal outside air supply, smoke intake, smoke exhaust, and restroom exhaust isolation dampers
	Capacity	Varies
	Type	Safety-related bubble tight, air operated, motor operated, fail-closed
CBGAVS - SET A		
Supply Air Handling Units	Quantity:	1 - 100% capacity
		Cooling: approximately 239 kWatt
		Heating: approximately 405 kW (1% exceedance-full flow)
	Type	Sheet Metal housing containing medium efficiency filters, chilled water cooling coil, heating coil and centrifugal fan

Table 9.4-2

Major Equipment for CBVS (Continued)

AHU Supply Fans	Quantity:	2 - 100% capacity each
	Capacity:	Flow – 10,300 l/s (21,824 cfm) each
	Type	Axial or centrifugal, with inlet vanes or variable frequency drives, approximately 30 kW (40 hp)
Return/Exhaust Fan	Quantity:	2 - 100% capacity each
	Capacity:	Flow – 9,700 l/s (20,553 cfm) each
	Type	Axial or centrifugal with inlet vanes or variable frequency drives, approximately 11kW (15 hp)
CBGAVS - SET B		
Supply Air Handling Units	Quantity:	1 - 100% capacity
		Cooling: approximately 223 kW
		Heating: approximately 371 kW (1% exceedance - full flow)
	Type	Sheet Metal housing containing medium efficiency filters, chilled water cooling coil, heating coil and centrifugal fan
AHU Supply Fans	Quantity:	2 - 100% capacity each
	Capacity:	Flow – 9,450 l/s (20,000 cfm) each
	Type	Axial or centrifugal, with inlet vanes or variable frequency drives, approximately 30kW (40 hp)
Return/Exhaust Fan	Quantity:	2 - 100% capacity each
	Capacity:	Flow – 8,950 l/s (18,964 cfm) each
	Type	Axial or centrifugal with inlet vanes or variable frequency drives, approximately 11 kW (15 hp)

Table 9.4-3

Design Parameters for FBVS

FBGAVS	
Operating Periods:	Normal plant operation, plant startup, and plant shutdown
Temperatures:	
Outdoor Design:	Summer: 37.8°C (100°F) Dry Bulb 26.1°C (79°F) Wet Bulb (coincident) Winter: -23.3°C (-10°F) Dry bulb
Indoor Design:	
Occupied Areas	23°C to 26°C (73°F to 78°F)
Occupied Areas With Moderate Work and Areas With Electronic Equipment:	18°C to 29°C (65°F to 85°F)
Areas With Frequent Inspection/Maint. (without sensitive electronic equipment):	10°C to 40°C (50°F to 104°F)
HVAC Equipment Room:	10°C to 40°C (50°F to 104°F)
Pressurization:	-62 PaG (-1/4 in. w.g.) minimum relative to surrounding areas
FBFPVS	
Operating Periods:	Same as FBGAVS
Temperatures:	Same as FBGAVS
Areas With Infrequent Inspections or Maintenance Activities (without sensitive equipment):	10°C to 40°C (50°F to 104°F)
Spent Fuel Pool Area Wet Bulb Global Temperature:	Below 27°C (80°F)
Pressurization:	-62 PaG (-1/4 in. w.g.) minimum relative to surrounding areas

Table 9.4-4

Major Equipment for FBGAVS

Supply Air Handling Unit (AHU)	Quantity:	1
	Capacity:	Flow – 12,300 l/s (26,060 cfm)
		Filtration – medium efficiency
		Cooling – approximately 756 kW (2,582,400 Btu/hr)
		Heating – approximately 579 kW (1,978,656 Btu/hr)
AHU Supply Fans	Quantity:	2 - 100% capacity (one running and one standby)
	Capacity:	Flow – 12,300 l/s (26,060 cfm) per unit
	Type:	Axial or centrifugal with Variable Frequency Drive, approximately 37 kW (50 hp)
Exhaust Fans	Quantity:	2 - 100% capacity (one running and one standby)
	Capacity:	Flow – 13,550 l/s (28,710 cfm) per unit
	Type:	Axial or centrifugal with Variable Frequency Drive, approximately 11 kW (15 hp)
Building Supply Isolation Damper	Quantity:	2 (Safety-Related, Seismic Category I)
	Capacity:	12,300 l/s (26,060 cfm)
	ASME AG-1 Seat Leakage Class	I - Low Leakage
	Actuator Type	Pneumatic, fail close
Building Exhaust Isolation Damper	Quantity:	2 (Safety-Related, Seismic Category I)
	Capacity:	13,550 l/s (28,710 cfm)
	ASME AG-1 Seat Leakage Class	I - Low Leakage
	Actuator Type	Pneumatic, fail close
FMCRD Recirculation AHU	Quantity:	1 - 100% capacity
	Capacity:	Flow – 600 l/s (1,272 cfm) per unit
		Filtration – low efficiency
AHU Supply Fan	Quantity:	1 - 100% capacity
	Capacity:	Flow – 600 l/s (1,272 cfm) per unit
	Type:	Centrifugal, direct drive

Table 9.4-4

Major Equipment for FBGAVS (Continued)

FB Purge Exhaust Filter Unit	Quantity:	2 - 100% capacity
	Capacity	Flow – 4,800 l/s (10,170 cfm)
	Type	Medium efficiency filter, HEPA filter (99% credited), carbon filter (95%), and post-filter (95%)

Table 9.4-5

Major Equipment for FBFPVS

Supply Air Handling Unit (AHU)	Quantity:	1
	Capacity:	Flow – 14,350 l/s (30,405 cfm)
		Filtration – medium efficiency
		Cooling – approximately 882.3 kW (3,012,000 Btu/hr)
		Heating – approximately 676 kW (2,307,737 Btu/hr)
AHU Supply Fans	Quantity:	2 - 100% capacity (one running and one standby)
	Capacity:	Flow – 14,350 l/s (30,405 cfm) per unit
	Type:	Centrifugal or axial with Variable Frequency Drive, approximately 45 kW (60 hp)
Exhaust Fans	Quantity:	2 - 100% capacity (one running and one standby)
	Capacity:	Flow – 15,790 l/s (33,457 cfm) per unit
	Type:	Centrifugal or axial with Variable Frequency Drive, approximately 11 kW (15 hp)
Building Supply Isolation Damper	Quantity:	2 (Safety-Related, Seismic Category I)
	Capacity:	14,350 l/s (30,405 cfm)
	ASME AG-1 Seat Leakage Class	I - Low Leakage
	Actuator Type	Pneumatic, fail close
Building Exhaust Isolation Damper	Quantity:	2 (Safety-Related, Seismic Category I)
	Capacity:	15,800 l/s (32,843cfm)
	ASME AG-1 Seat Leakage Class	I - Low Leakage
	Actuator Type	Pneumatic, fail close

Table 9.4-6

RWVS Design Conditions

Control Room and Areas With Electronic Equipment:	23°C to 26°C (73°F to 78°F) and relative humidity between 35-50%
Corridors and General Access Areas:	10°C to 40°C (50°F to 104°F)
Equipment Cells:	10°C to 50°C (50°F to 122°F)
Tank Rooms:	10°C to 50°C (50°F to 122°F)
HVAC Equipment Room:	10°C to 40°C (50°F to 104°F)
Design Pressurization: RW Control Room & Electronic Equipment Areas General Areas	 +31 PaG (+0.125” w.g.) -31 PaG (-0.125” w.g.)

Table 9.4-7

Major Equipment for the RWVS

RWGAVS Supply Air Handling Units (AHU)	Fans:	2 - 100% capacity (one running and one standby)
	Capacity:	Normal flow – 24,000 l/s (50,800 cfm)
	Filtration	Medium Efficiency
		Cooling – 700 kW (2,400,000 Btu/hr)
		Heating – 386 kW (1,318,000 Btu/hr)
	Fan Type:	Centrifugal or axial with Variable Frequency Drive
RWGAVS Exhaust Fans	Quantity:	3 - 50% capacity (two running and one standby)
	Capacity:	Normal Flow – 25,000 l/s (53,000 cfm)
	Filtration	Medium Efficiency & HEPA
	Type:	Centrifugal or axial with Variable Frequency Drive
RWCRVS Air Handling Units	Quantity:	2 - 100% capacity (one running and one standby)
	Capacity:	Flow - 11,500 l/s (24,000 cfm)
	Filtration	Medium Efficiency
	Type:	Centrifugal or axial
RWCRVS Smoke Exhaust Fans	Quantity:	2 - 50% capacity
	Capacity:	Flow – 3,300 l/s (7,000 cfm)
	Type:	Centrifugal or axial

Table 9.4-8

Design Parameters for RBVS

Description	Requirements
CONAVS and REPAVS	
Operation modes:	Normal plant operation, plant startup, and plant shutdown.
Outdoor Design Temperatures: Summer:	37.8°C db (100°F), 26.1°C wb (79°F) (coincident)
Winter:	-23.3°C db (-10°F)
Indoor Design Temperatures (Occupied areas):	23°C to 26°C (73°F to 78°F)
Occupied areas with moderate work and areas with electronic equipment:	18°C to 29°C (65°F to 85°F)
Areas with frequent inspections/maintenance (without sensitive electronic equipment):	10°C to 40°C (50°F to 104°F)
HVAC equipment room:	10°C to 40°C (50°F to 104°F)
Pressurization:	-62 PaG (-0.25 in. w.g.) minimum relative to surrounding areas
CLAVS	
Operation modes:	Normal plant operation, plant startup, and plant shutdown.
Outdoor Design Temperatures: Summer:	37.8°C db (100°F), 26.1°C wb (79°F) (coincident)
Winter:	-23.3°C db (-10°F)
Indoor Design Temperatures (Occupied Areas):	23°C to 26°C (73°F to 78°F)
Occupied areas with moderate work and areas with electronic equipment:	18°C to 29°C (65°F to 85°F)
Battery Room Temperature:	Nominal 20°C to 22°C (68°F to 72°F)
Battery Room Alarms (Low / High):	18°C (65°F)/ 25°C (77°F)
Areas with frequent inspections/maintenance activities (without sensitive electronic equipment):	10°C to 40°C (50°F to 104°F)

Table 9.4-8
Design Parameters for RBVS (Continued)

Description	Requirements
CLAVS	
Pressurization (battery rooms):	Slightly negative relative to surrounding CLAVS areas
Pressurization (other CLAVS rooms):	Slightly positive relative to surrounding areas

Table 9.4-9

Major Equipment for CLAVS

Supply Air Handling Unit (AHU)	Quantity:	2 (one per CLAVS train)
	Capacity:	Total flow – 27,250 l/s (57,739 cfm)
		Filtration - medium efficiency
		Cooling – approximately 686.4 kW (2,344,203 Btu/hr)
		Heating – approximately 100.5 kW (343,406 Btu/hr)
AHU Supply Fans	Quantity:	4 - 100% capacity (one running and one standby per AHU)
	Capacity:	Normal flow - 13,625 l/s (29,000 cfm) per fan
	Type:	Centrifugal or axial with variable inlet vanes or Variable Frequency Drive, approximately 37 kW (50 hp)
Return/Exhaust Fans	Quantity:	4 - 100% capacity (one running and one standby per train)
	Capacity:	Flow – 12,400 l/s (26,300 cfm) per fan
	Type:	Centrifugal or axial with variable inlet vanes or Variable Frequency Drive, approximately 15 kW (20 hp)
Battery Room Exhaust Fan	Quantity:	4 - 100% capacity (one running and one standby per train)
	Capacity:	Flow – 1,025 l/s (2,200 cfm) per fan
	Type:	Centrifugal or axial with Variable Frequency Drive or with inlet vanes, approximately 1 kW (1.5 hp)
Safety-Related Building Isolation Dampers	Quantity:	8 (2 redundant dampers for each CLAVS supply and exhaust duct train) 2 redundant dampers for each of the Battery Room Exhaust /Duct trains
	ASME AG-1 Seat Leakage Class	I – Low Leakage
	Actuator Type	Pneumatic, fail close

Table 9.4-10

Major Equipment for REPAVS

Supply Air Handling Unit (AHU)	Quantity:	1
	Capacity:	Flow – 29,150 l/s (61,765 cfm)
		Filtration –Medium efficiency
		Cooling – approximately 1,605 kW (5,480,749 Btu/hr)
		Heating – approximately 1,193 kW (4,074,968 Btu/hr)
AHU Supply fans	Quantity:	2 - 100% capacity (one running and one standby)
	Capacity:	Flow - 29,150 l/s (61,765 cfm) per unit
	Type:	Centrifugal or axial with Variable Frequency Drive or with inlet vanes, approximately 110 kW (150 hp)
Exhaust Fans	Quantity:	2 - 100% capacity
	Capacity:	Flow – 32,000 l/s (67,910 cfm) per fan
	Type:	Centrifugal or axial with Variable Frequency Drive or with inlet vanes, approximately 37 kW (50 hp)
Safety-related Building Isolation Damper	Quantity:	4 (2 redundant dampers for each supply and exhaust duct)
	ASME AG-1 Seat Leakage Class	I – Low Leakage
	Actuator Type	Pneumatic, fail close

Table 9.4-11

Major Equipment for CONAVS

Supply Air Handling Unit (AHU)	Quantity:	2 (one per CONAVS train)
	Capacity:	Total flow – 18,150 l/s (38,458 cfm) Max flow – 24,250 l/s (51,385 cfm)
		Filtration - medium efficiency
		Cooling - approximately 1,340 kW (4,569,638 Btu/hr)
		Heating - approximately 993 kW (3,389,983 Btu/hr)
AHU Supply fans	Quantity:	4 - 100% capacity (one running and one standby per AHU)
	Capacity:	Normal flow – 9,070 l/s (19,200 cfm) per fan Max flow - 12,125 l/s (25,700 cfm) per fan
	Type:	Centrifugal or axial with Variable Frequency Drive or variable inlet vanes approximately 46.5 kW (64 hp)
Exhaust fans	Quantity:	4 - 100% capacity (one running and one standby per train)
	Capacity:	Normal flow – 10,000 l/s (21,200 cfm) per fan Max flow – 13,000 l/s (27,500 cfm) per fan
	Type:	Centrifugal or axial with Variable Frequency Drive or with inlet vanes, approximately 15 kW (20 hp)
Containment purge exhaust fan	Quantity:	2 - 50% capacity (one running and one standby)
	Capacity:	Flow - 3,000 l/s (6,400 cfm)
	Type:	Centrifugal or axial with Variable Frequency Drive or variable inlet vanes, approximately 3.7 kW (5 hp)
Safety-related Building Isolation Damper	Quantity:	8 (2 redundant dampers for each supply and exhaust duct trains)
	ASME AG-1 Seat Leakage Class	I – Low Leakage
	Actuator Type	Pneumatic, fail close

Table 9.4-11

Major Equipment for CONAVS (Continued)

(Deleted)		
Refueling Machine Control Room Recirculation AHU	Quantity:	1- 100% capacity (used when cooling is necessary)
	Capacity:	Flow - 850 l/s (1800 cfm) per unit
		Filtration – low efficiency
		Cooling - approximately 10 kW (36,000 Btu/hr)
	Type:	Centrifugal or axial, approximately 0.75 kW (1hp)
Reactor Building HVAC Online Purge Exhaust Filter Unit	Quantity:	2 - 50% capacity
	Capacity:	Flow – 2,400 l/s (5,085 cfm)
	Type:	Medium efficiency filter, HEPA filter (99% credited), Carbon filter (95%), and post-filter (95%)
	Fan:	Centrifugal or axial with Variable Frequency Drive or with inlet vanes, approximately 11.2 kW (15 hp)
Reactor Building HVAC Accident Exhaust Filter Unit	Quantity:	2 - 100% capacity
	Capacity:	Flow – nominal 470 l/s (1,000 cfm)
	Type:	Medium efficiency filter, HEPA filter (99% credited), Carbon filter (95%), and post-filter (95%).
	Fan:	Centrifugal or axial with Variable Frequency Drive

Table 9.4-12

Drywell Cooling System Design Parameters

Specifically, the DCS is designed to maintain the following conditions in the upper and lower drywell during normal and plant refueling modes of operation:	
Normal Plant Operation:	
Average dry bulb temperature	≤57°C (≤135°F)
Maximum temperature of ambient atmosphere in each drywell zone	65.5°C (150°F)
Plant Refueling:	
Average dry bulb temperature	25°C (77°F)

Table 9.4-13

Drywell Cooling System Fan Cooling Units

Upper Drywell FCUs *	
Number of Fans Per FCU	2
Motor and Fan	Directly coupled
Number of Rows Per Coil	No more than 8 each
Cooling Coil Type	Plate Fin (4 fins/cm max.) (11 fins/inch max.)
Air Inlet Temperature	57°C (135°F)
Air Flow Rate (total)	114,410 m^3/hr (67,400 cfm)
Cooling Capacity (each FCU)	1,540 kW (5.3 x 10^6 Btu/hr)
Fan Type	Vaneaxial or centrifugal with Variable Frequency Drive
Lower Drywell FCUs	
Number of Fans Per FCU	2
Motor and Fan	Directly coupled
Number of Rows Per Coil	No more than 8 each
Cooling Coil Type	Plate Fin (4 fins/cm max.) (11 fins/inch max.)
Air Inlet Temperature	57°C (135°F)
Air Flow Rate (total)	31,195 m^3/hr (18,360 cfm)
Cooling Capacity (each FCU)	500 kW (1.7 x 10^6 Btu/hr)
Fan Type	Vaneaxial or centrifugal with Variable Frequency Drive

* Design case is one FCU in operation with both FCU fans operating.

Table 9.4-14

Drywell Cooling System Heat Loads

Upper Drywell		
	Normal kW (Btu/hr)	Refueling kW (Btu/hr)
Sensible Load	790 (2.69 x 10^6)	82 (0.28 x 10^6)
Latent Load	786 (2.68 x 10^6)	16 (0.05 x 10^6)
Total Load	1,576 (5.37 x 10^6)	98 (0.33 x 10^6)
Lower Drywell		
	Normal kW (Btu/hr)	Refueling kW (Btu/hr)
Sensible Load	172 (0.59 x 10^6)	75 (0.26 x 10^6)
Latent Load	21 (0.07 x 10^6)	Negligible
Total Load	193 (0.66 x 10^6)	75 (0.26 x 10^6)

Table 9.4-15

Design Parameters for TBVS

TBVS		
Operating modes:	Normal plant operation, plant startup, and plant shutdown	
Temperatures:		
Outdoor Design (2% Exceedance):	Summer:	35.6°C db (96°F), 26.1°C wb (79°F) (coincident)
	Winter:	-23.3°C (-10°F) Dry bulb
Indoor Design Parameters:		
General Areas		
Indoor Minimum Temperature	10°C (50°F)	
Indoor Maximum Temperature	40°C to 50°C (104°F to 122°F)	
Relative Humidity	Uncontrolled	
Areas with Electrical Equipment		
Indoor Minimum Temperature	10°C (50°F)	
Indoor Maximum Temperature	40°C (104°F)	
Relative Humidity	Uncontrolled	
TBAS Subsystem		
Air Handling Units		
Number	1 x 100%	
Capacity	48,000 l/s (101,700 cfm)	
Fan Number	3 x 50%	
Fan Type	Centrifugal or axial with Variable Frequency Drive	
Fan Capacity	24,000 l/s (50,850 cfm)	
Filter Type	Medium Efficiency Filters	

Table 9.4-15

Design Parameters for TBVS (Continued)

TBE Subsystem	
Fans	
Number	3 x 50%
Type	Centrifugal or axial with Variable Frequency Drive
Capacity	26,400 l/s each (55,938 cfm)
TBCE Subsystem	
Fans	
Number	2 x 100%
Type	Centrifugal or axial with Variable Frequency Drive option
Capacity	14,000 l/s (29,665 cfm)
Prefilters	High Efficiency Filters
Filters	HEPA Filters
TBLOE Subsystem	
Fans	
Number	2 x 100%
Type	Centrifugal or axial
Capacity	4,500 l/s (9,535 cfm)
TBDRE Subsystem	
Fans	
Number	1 x 100%
Type	Centrifugal or axial
Capacity	1,900 l/s (4025 cfm)
Prefilters	High Efficiency Filters
Filters	HEPA filters

Table 9.4-15

Design Parameters for TBVS (Continued)

Main Steam Tunnel Recirculation AHU	
Air Handlers Quantity	2- 100% capacity
Capacity	Flow - 9,000 l/s (19,070 cfm) per unit
	Filtration – low efficiency
	Cooling - approximately 312kW (1,065,000 Btu/hr)
Miscellaneous Equipment Rooms AHUs	
Number	To be determined during detailed design
Type	Chilled Water Coil w/ Centrifugal or axial Fan
Filters	Low Efficiency
Capacity	To be determined during detailed design

Table 9.4-16
Design Parameters for EBVS

EBVS		
Operating Modes:	Normal plant operation, plant startup, and plant shutdown	
Temperatures:		
Outdoor Design:	Summer:	37.8°C db (100°F), 26.1°C wb (79°F) (coincident)
	Winter:	-23.3°C (-10°F) Dry bulb
Indoor Design:		
Switchgear and Cable Spreading Rooms	10°C to 40°C (50°F to 104°F) RH uncontrolled	
Diesel Generator General Areas and Day Tank Room	10°C to 50°C (50°F to 122°F) RH uncontrolled	
DG Electronic Equipment Areas	10°C to 40°C (50°F to 104°F) RH uncontrolled	
Battery Rooms Battery Room Alarm (Low / High)	Nominal 20°C to 22°C (68°F to 72°F) 18°C (65°F)/ 25°C (77°F) RH uncontrolled Hydrogen Concentration 2% maximum	
Electronic Rooms	18.3°C to 29.4°C (65°F to 85°F) RH uncontrolled	
Technical Support Center	21°C to 26°C (70°F to 78°F) RH 25 – 60% +31 PaG (+0.125” w.g.) minimum pressure with respect to surrounding areas Pressurization flow of approximately 667 l/s (1413 cfm)	

Table 9.4-16

Design Parameters for EBVS (Continued)

EER Subsystem		
EER Supply Air Handling Units (AHU)		
Number	2 Trains (2 x 100% units per train)	
Capacity	24,950 l/s each (52,855 cfm each)	
Filters	Medium Efficiency	
AHU Fans	1 x 100% fan per AHU	
Capacity	24,950 l/s each (52,855 cfm each)	
Fan Type	Centrifugal or axial with Variable Frequency Drive	
EER Return Fans	Train A	Train B
Number	2 x 100% fans per train	
Capacity	23,060 l/s each (48,852 cfm each)	23,610 l/s each (50,030 cfm each)
Type	Centrifugal or axial with Variable Frequency Drive	
EER Battery Room Exhaust Fan	Train A	Train B
Number	2 x 100% fans per train	
Capacity	2,080 l/s each (4,415 cfm each)	1,470 l/s each (3,120 cfm each)
Type	Centrifugal or axial with Variable Frequency Drive	
TSC Subsystem (Trains A & B identical)		
TSC Air Filtration Units (AFU)		
Number	1 x 100% unit per train	
Capacity	670 l/s each (1,413 cfm each)	

Table 9.4-16

Design Parameters for EBVS (Continued)

Type	Metal housing containing prefilter, HEPA filter, carbon filter, and post filter
Efficiency	99% credited removal for HEPA, 95% credited removal for carbon filter and 95% post filter per RG 1.140
Fans per AFU (TSC AFU Supply Fan)	1
Fan Type	Centrifugal or axial with Variable Frequency Drive
TSC Air Handling Unit (AHU)	
Number	1 x 100% fan per train
Capacity	5,420 l/s each (11,478 cfm each)
Filters	Medium Efficiency
Supply Fans	1
Supply Fan Type	Centrifugal or axial with Variable Frequency Drive
TSC Exhaust Fans	
Number	2 x 100%
Capacity	670 l/s each (1,413 cfm each)
Type	Centrifugal or axial
Diesel Generator (DG) Subsystem (Trains A & B identical)	
DG Air Handling Units (AHU)	
Number	1 x 100% unit per DG
Capacity	7,170 l/s each (15,185 cfm each)
Filters	Medium Efficiency
Fans per AHU	1 x 100% per DG
Supply Fan Type	Centrifugal or axial with Variable Frequency Drive

Table 9.4-16

Design Parameters for EBVS (Continued)

DG Electronics Room AHU	
Number	1 x 100% unit per DG/train
Capacity	2,780 l/s each (5,900 cfm each)
Filters	Medium Efficiency
Fans per AHU	1 x 100% per DG/train
Supply Fan Type	Centrifugal or Axial
DG Power Roof Ventilators	
Number	6 per DG x 20%
Capacity	17,220 l/s (36,492 cfm) each
Fan Type	Centrifugal or axial with optional Variable Frequency Drive

Table 9.4-17

Industrial Codes and Standards Applicable to ESBWR HVAC

Code or Standard Number[1]	Title
American Iron and Steel Institute (AISI)	
CF02-1	Cold-Formed Steel Framing Design Guide (Latest edition based on the 2001 edition and 2004 supplement of the AISI Specification for the Design of Cold-Formed Steel Structural Members)
SG02-1 and SG02-2	North American Specification for the Design of Cold-Formed Steel Structural Members, and Commentary
SG05-1e	Supplement 2004 to the North American Specification for the Design of Cold-Formed Steel Structural Members, 2001 Edition
Air-Conditioning and Refrigeration Institute (ARI)	
410	Force-circulation Air-cooling and Air-heating Coils
430	Central Station Air Handling Units
450	Water-Cooled Refrigerant Condensers, Remote Type
550/590	Water Chilling Packages Using the Vapor Compression Cycle
575	Method of Measuring Machinery Sound Within an Equipment Space
Air Movement and Control Association (AMCA)	
99	Standards Handbook
200	Air Systems
201	Fans and Systems
202	Troubleshooting
203	Field Performance Measurements of Fan Systems
210	Laboratory Methods of Testing Fans for Rating – Addenda A, August 21, 2001
301	Methods for Calculating for Sound Ratings from Laboratory Test Data
302	Sone Rating Applications Publication
303	Sound Power Level Ratings Applications Publication
410	Recommended Safety Practices for Users and Installers of Industrial & Commercial Fans
500-D	Laboratory Methods of Testing Dampers for Rating
500-L	Laboratory Methods of Testing Louvers for Rating
502	Damper Application Manual for Heating, Ventilation, and Air Conditioning
503	Fire, Ceiling (Radiation), Smoke and Fire/Smoke Dampers Application Manual
801	Industrial Process/ Power Generation Fans: Specification Guidelines

Table 9.4-17

Industrial Codes and Standards[1] Applicable to ESBWR HVAC (Continued)

Code or Standard Number	Title
American Nuclear Society (ANS)	
56.7	Boiling Water Reactor Containment Ventilation Systems
59.2	Safety Criteria for HVAC Systems Located Outside Primary Containment
American Society of Heating, Refrigerating and Air-Conditioning Engineers, Inc. (ASHRAE)	
15	Safety Standard for Refrigeration Systems
30	Methods of Testing Liquid-Chilling Packages
33	Methods of Testing Forced Circulation Air Cooling and Air Heating Coils
51	Laboratory Methods of Testing Fans for Aerodynamic Performance Rating
52	Testing Air-Cleaning Devices Used in General Ventilation for Removing Particulate Matter
52.1	Gravimetric and Dust-Spot Procedures for Testing Air-Cleaning Devices Used in General Ventilation for Removing Particulate Matter
52.2	Method of Testing General Ventilation Air-Cleaning Devices for Removal Efficiency by Particle Size
62-1	Ventilation for Acceptable Indoor Air Quality
American Society of Mechanical Engineers (ASME)	
AG-1	Code on Nuclear Air and Gas Treatment – including Addenda
B31.1	Power Piping
B31.5	Refrigeration Piping and Heat Transfer Components
ASTM International (formerly American Society for Testing and Materials)	
D3803	Standard Test Methods for Nuclear-Grade Activated Carbon
E741	Quality Standard Test Method for Determining Air Change in a Single Zone by Means of a Tracer Gas Dilution
American Water Works Association (AWWA)	
C200	Steel Water Pipe – 6 in. (150mm) and Larger, 2nd Edition
C203	Coal-Tar Protective Coatings and Linings for Steel Water Pipelines – Enamel and Tape – Hot Applied
D100	Welded Steel Tanks for Water Storage
Institute of Electrical and Electronics Engineers (IEEE)	
338	Standard Criteria for the Periodic Surveillance Testing of Nuclear Power Generating Station Safety Systems

Table 9.4-17

Industrial Codes and Standards[1] Applicable to ESBWR HVAC (Continued)

Code or Standard Number	Title
484	Recommended Practice for Installation Design and Installation of Vented Lead-Acid Batteries for Stationary Applications
Manufacturers Standardization Society of the Valve and Fittings Industry, Inc (MSS)	
SP 67	Butterfly Valves
National Fire Protection Association (NFPA)	
NFPA 80	Standard for Fire Doors and Windows
NFPA 90A	Standard for the Installation of Air-Conditioning and Ventilating Systems
NFPA 90B	Standard for the Installation of Warm Air Heating and Air-Conditioning Systems
NFPA 91	Standard for Exhaust Systems for Air Conveying of Vapors, Gases, Mists and Noncombustible Particulate Solids
NFPA 92A	Recommended Practice for Smoke Control Systems
NFPA 101	Life Safety Code
NFPA 110	Standard for Emergency and Standby Power Systems
NFPA 204	Standard for Smoke and Heat Venting
NFPA 214	Standard on Water-Cooling Towers
NFPA 251	Standard Methods of Tests of Fire Endurance of Building Construction and Materials
NFPA 252	Standard Methods of Fire Tests of Door Assemblies
NFPA 804	Standard for Fire Protection for Advanced Light Water Reactor Electric Generating Plants
National Air Filtration Association (NAFA)	
	Installation, Operation and Maintenance of Air Filtration Systems Manual
Sheet Metal and Air Conditioning Contractors' National Association (SMACNA)	
1143	HVAC Air Duct Leakage Test Manual
1208	HVAC Systems – Duct Design
1299	Rectangular Industrial Duct Construction Standards
1481	HVAC Duct Construction Standards – Metal and Flexible
1520	Round Industrial Duct Construction Standards
1780	HVAC Systems – Testing, Adjusting and Balancing
Underwriters Laboratories, Inc. (UL)	
555	UL Standard for Safety Fire Dampers

Table 9.4-17

Industrial Codes and Standards[1] Applicable to ESBWR HVAC (Continued)

Code or Standard Number	Title
555S	UL Standard for Smoke Dampers
586	UL Standard for High-Efficiency, Particulate, Air Filter Units
900	UL Standard for Safety Air Filter Units
1096	UL Standard for Safety Electric Central Air Heating Equipment
1950	UL Standard for Safety Information Technology Equipment, Including Electrical Business Equipment
1995	UL Standard for Heating and Cooling Equipment

[1]The listing of a code or standard does not necessarily mean that it is applicable in its entirety. See Table 1.9-22 for applicable revision

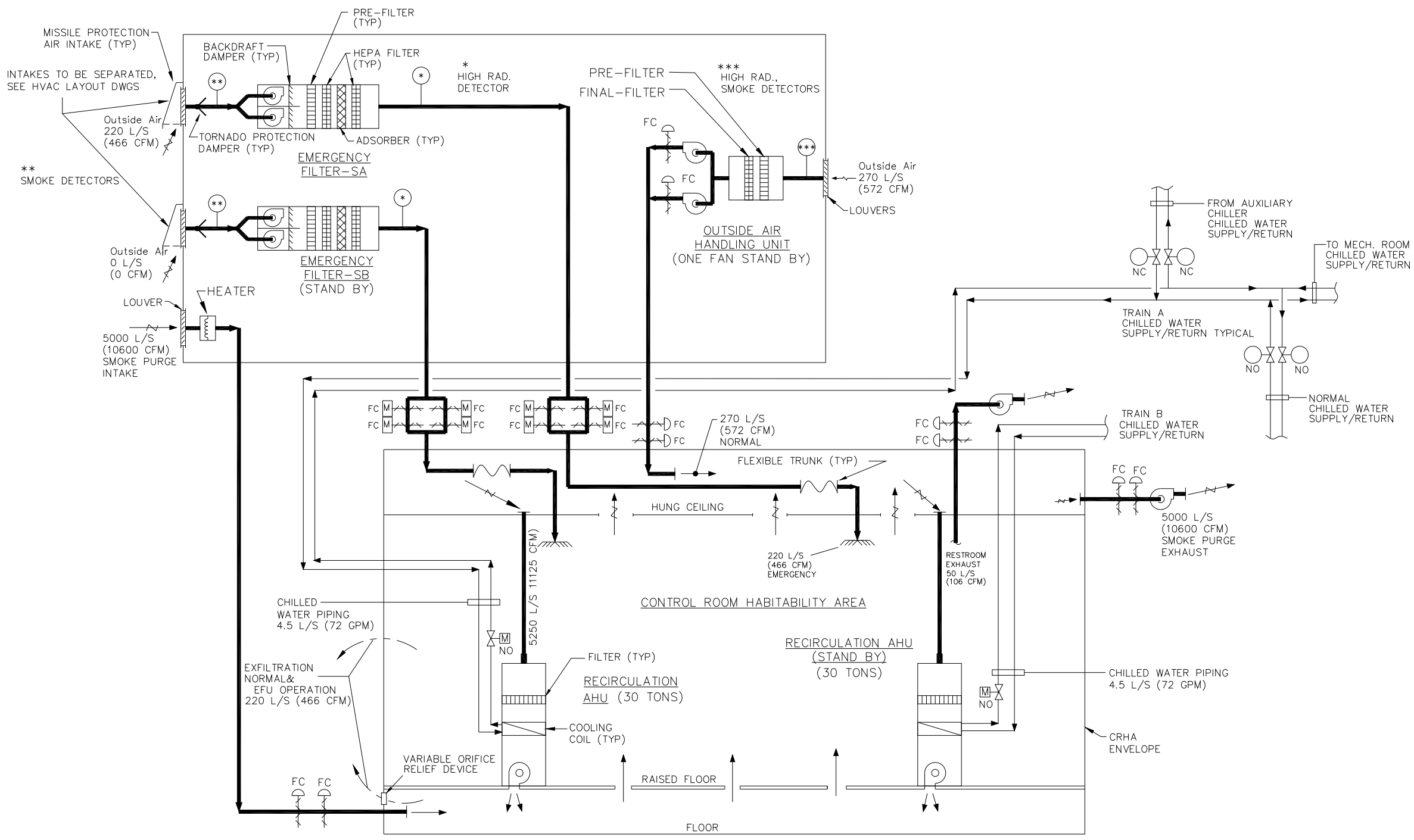

Figure 9.4-1. CRHAVS Simplified System Diagram

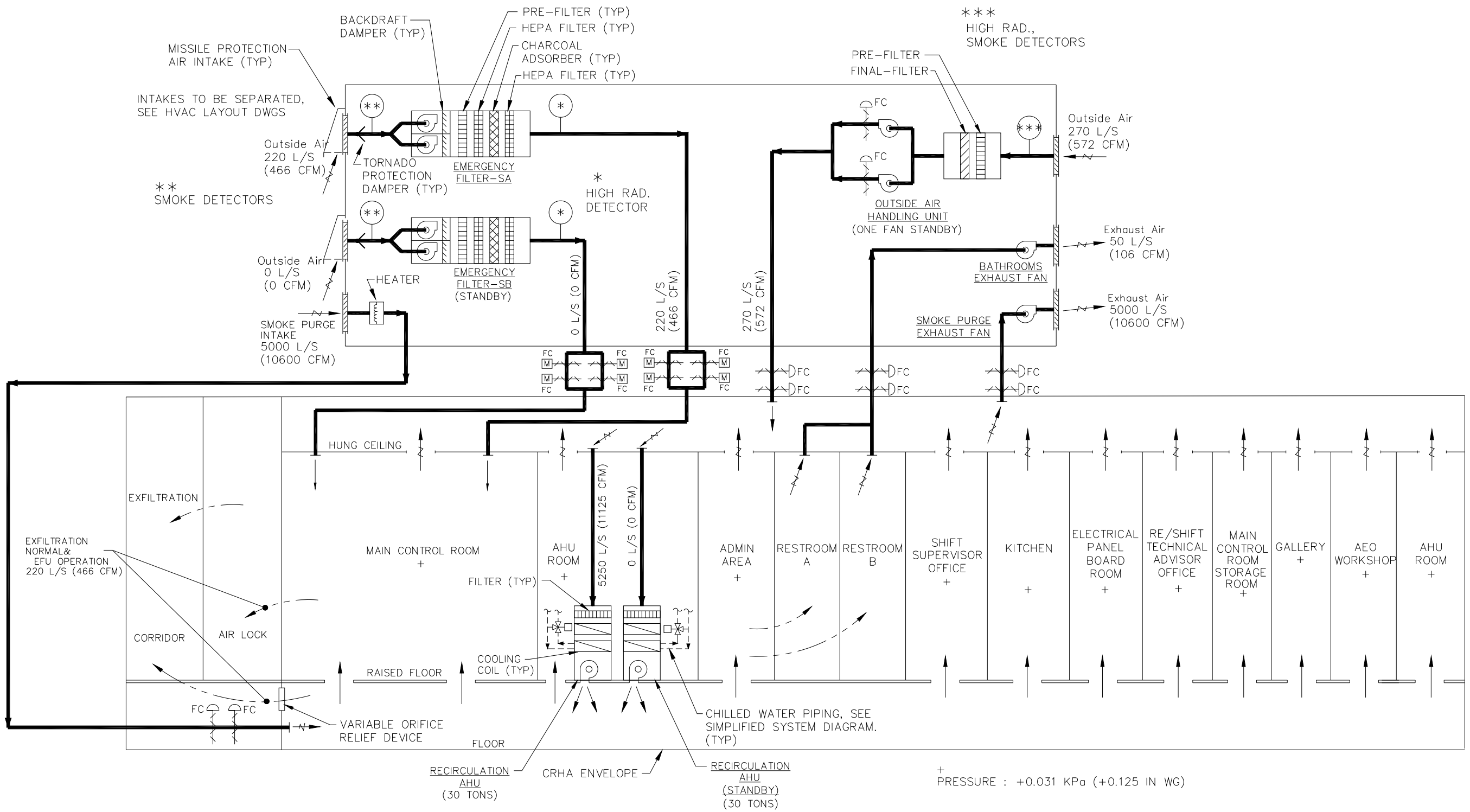

Figure 9.4-2. CRHAVS Air Flow Diagram

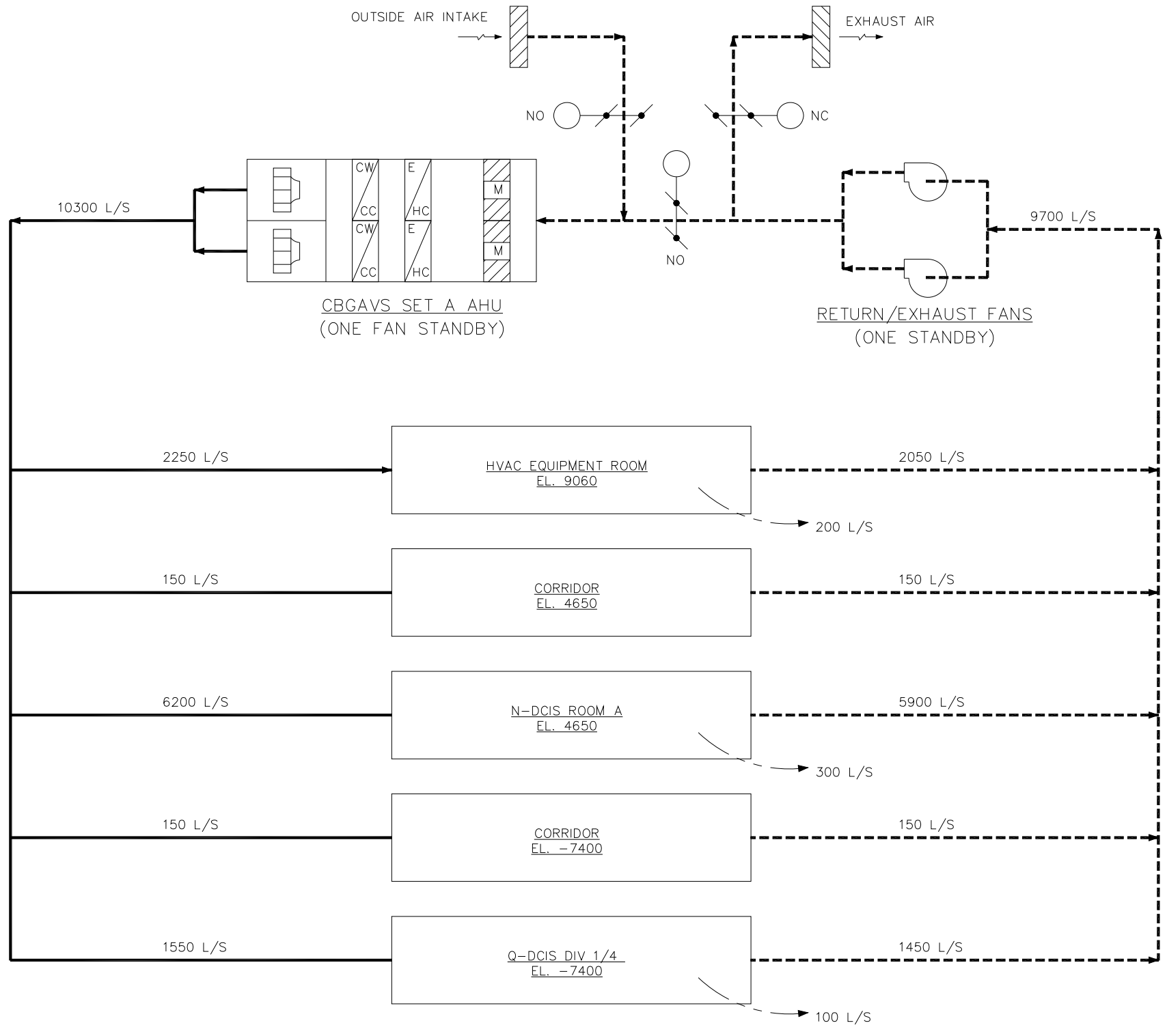

Figure 9.4-3. CBGAVS Set A Simplified System Flow Diagram

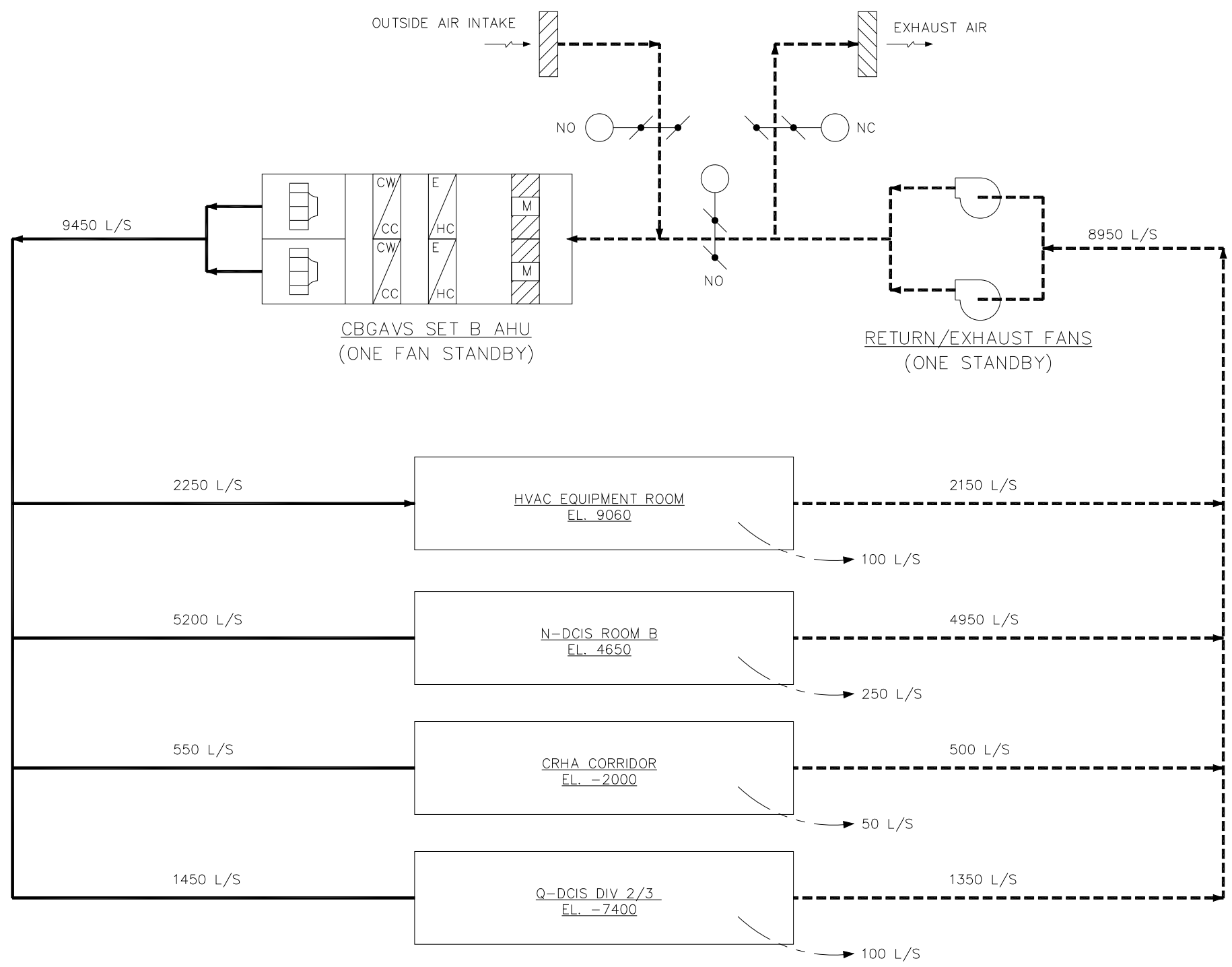

Figure 9.4-4. CBGAVS Set B Simplified System Flow Diagram

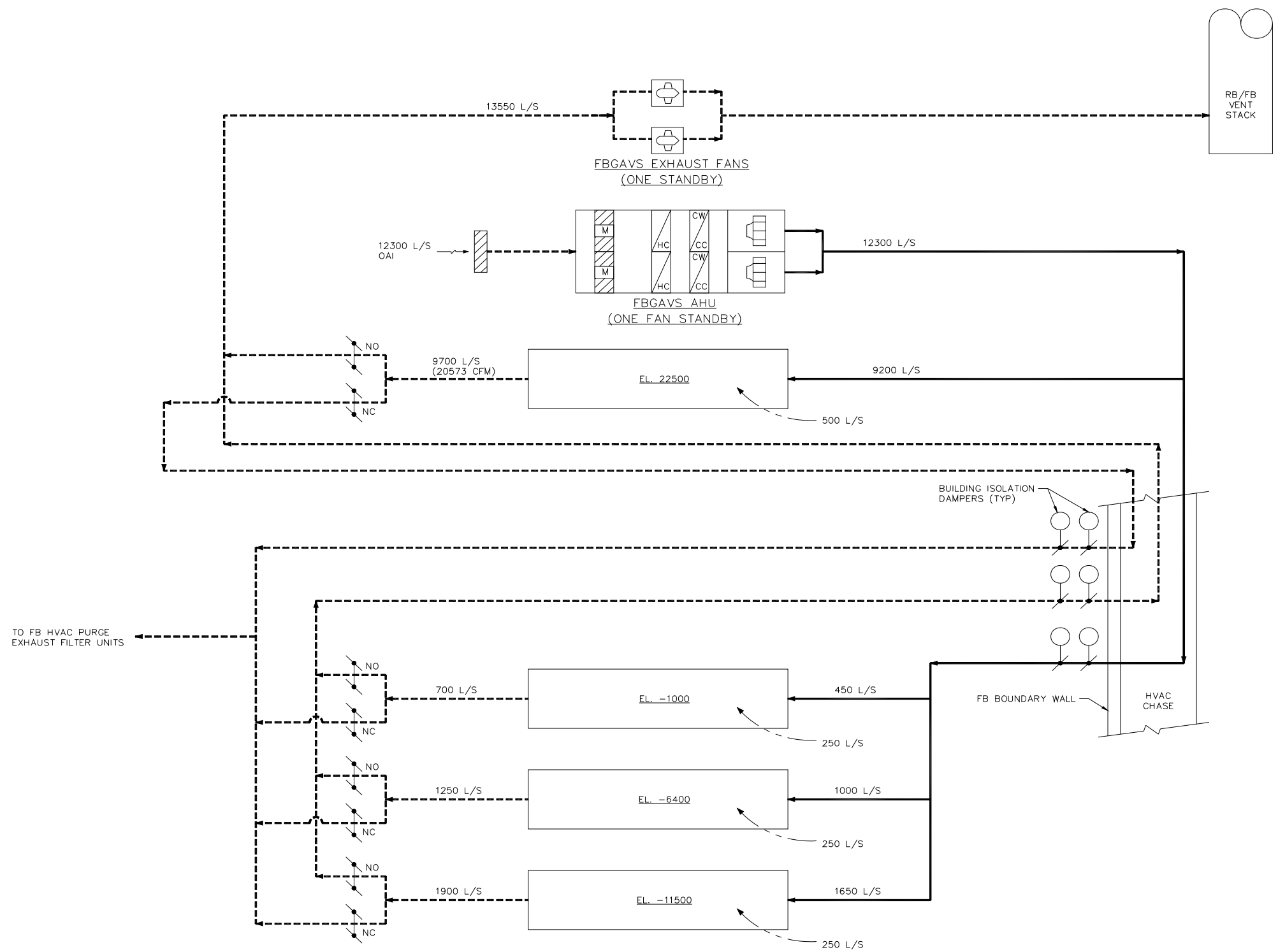

Figure 9.4-5. FBGAVS Simplified System Diagram

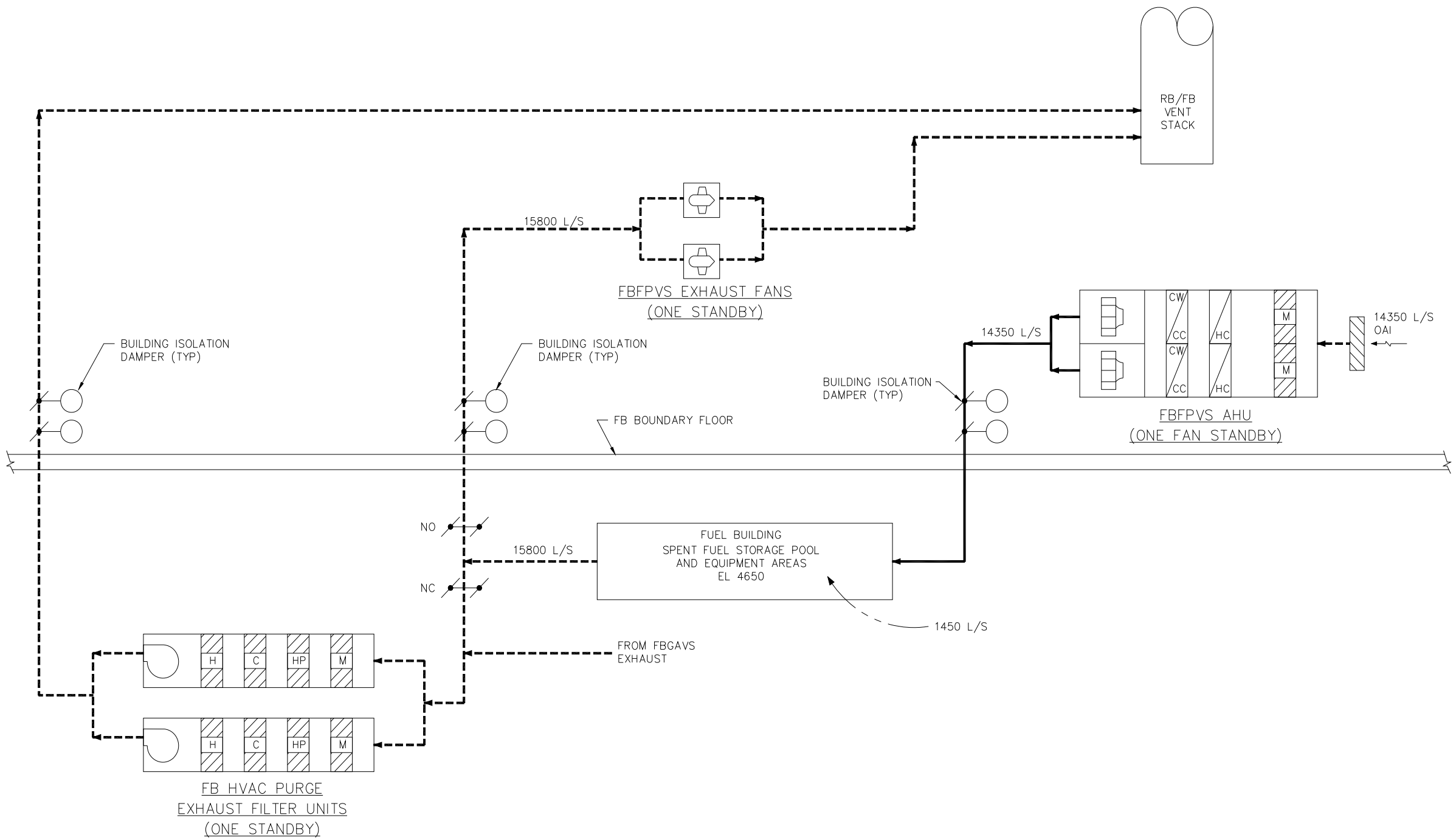

Figure 9.4-6. FBFPVS Simplified System Diagram

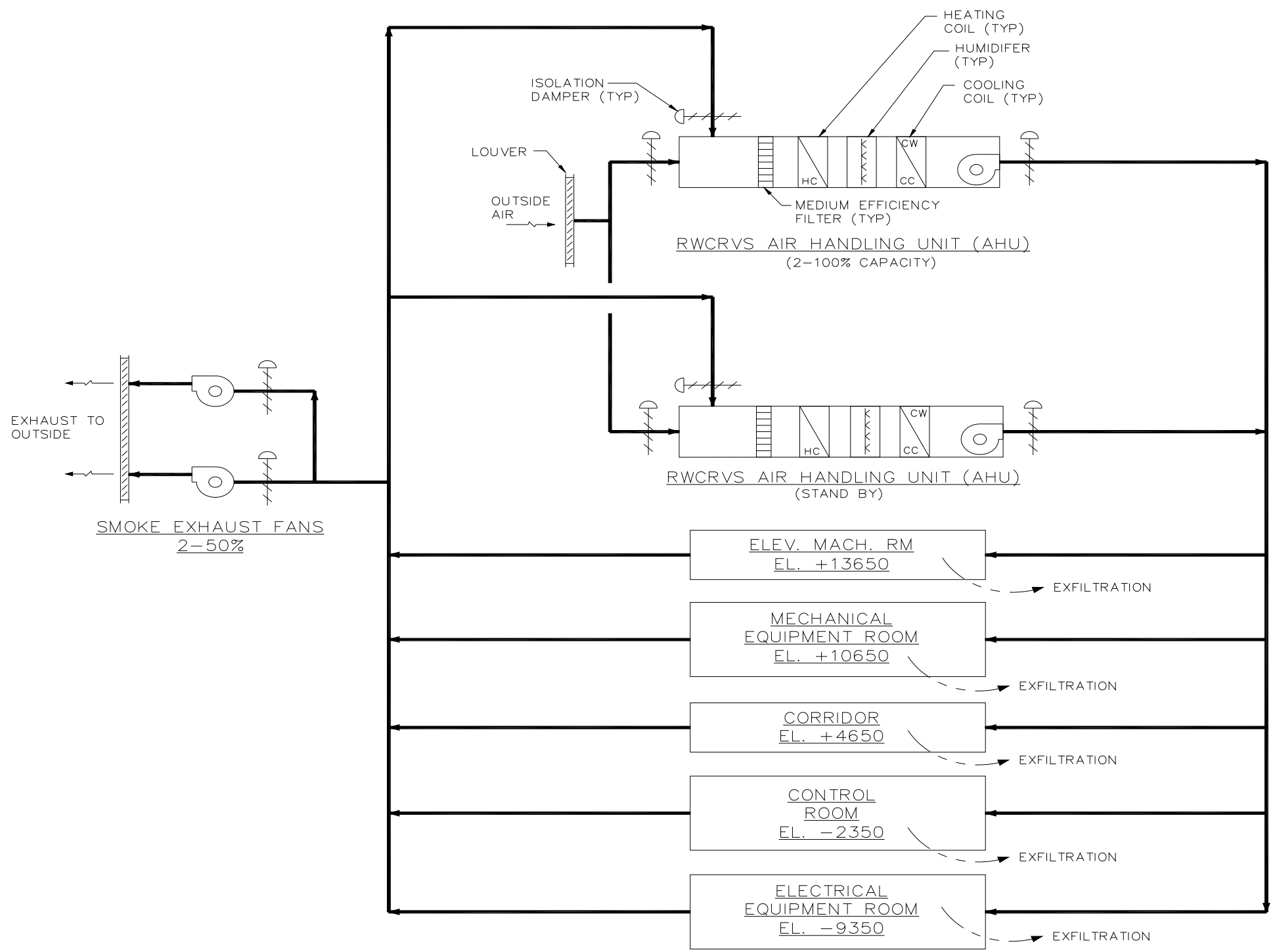

Figure 9.4-7a. RWCRVS Simplified Subsystem Diagram

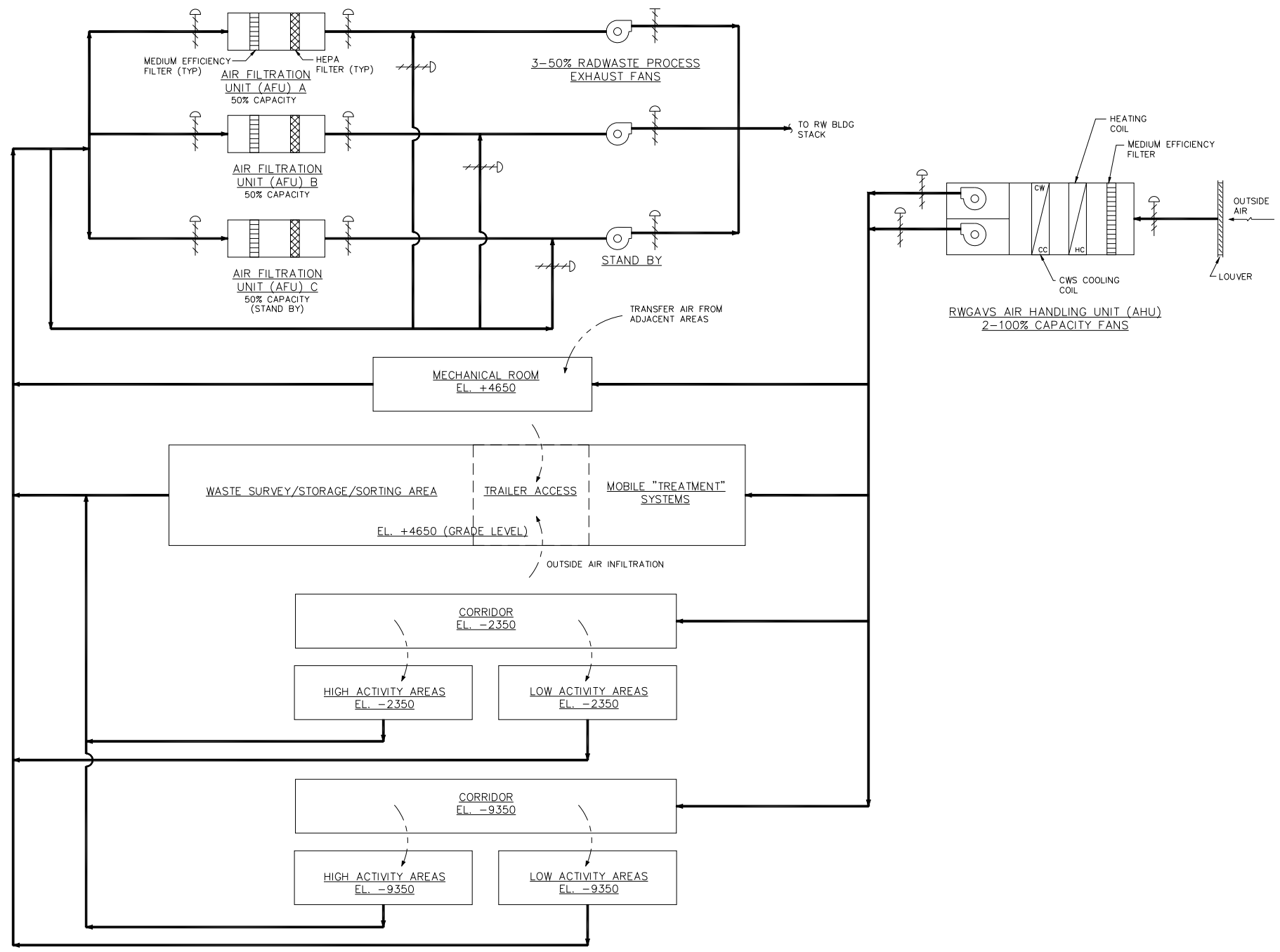

Figure 9.4-7b. RWGAVS Simplified Subsystem Diagram

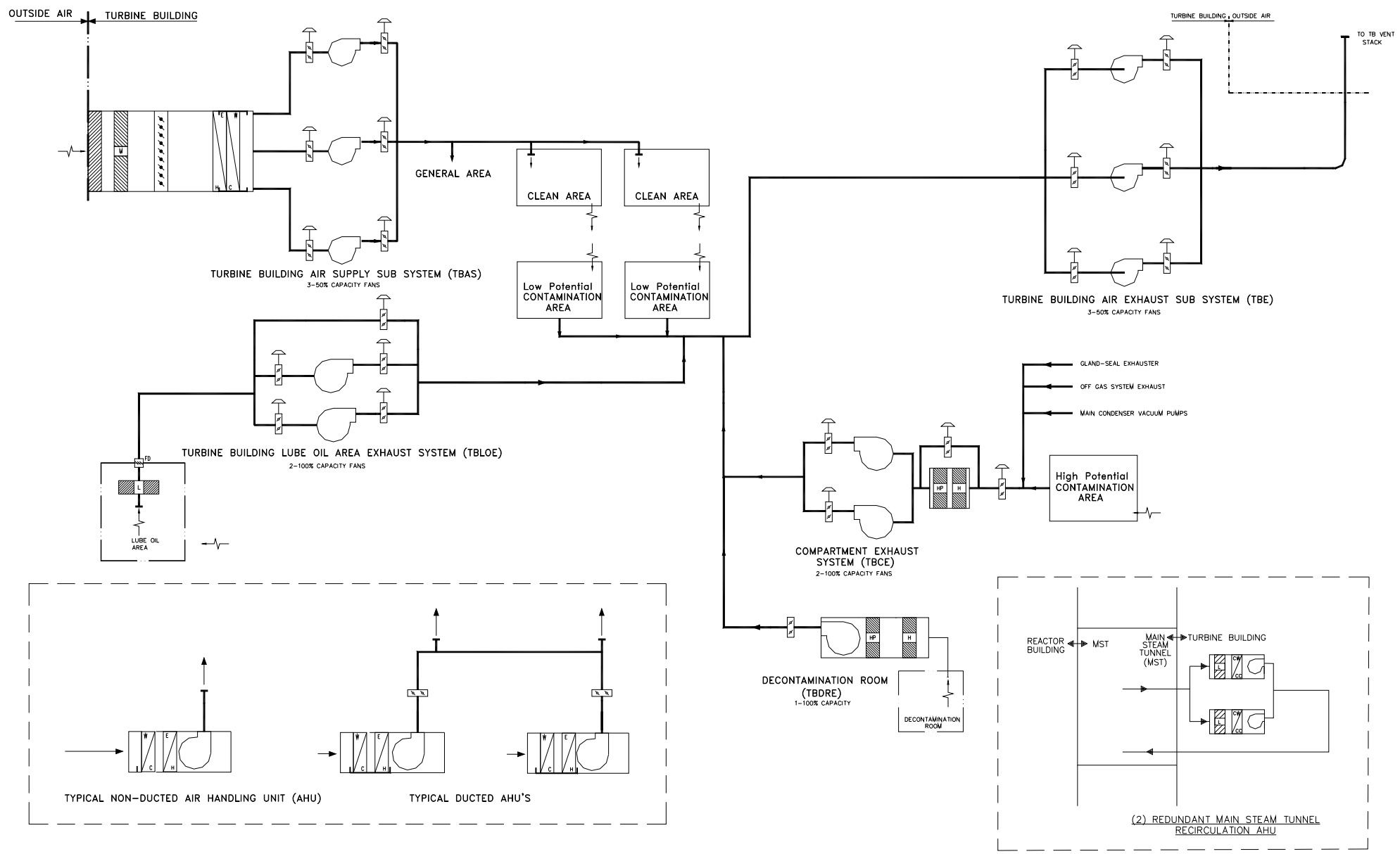

Figure 9.4-8. TBVS Simplified System Diagram

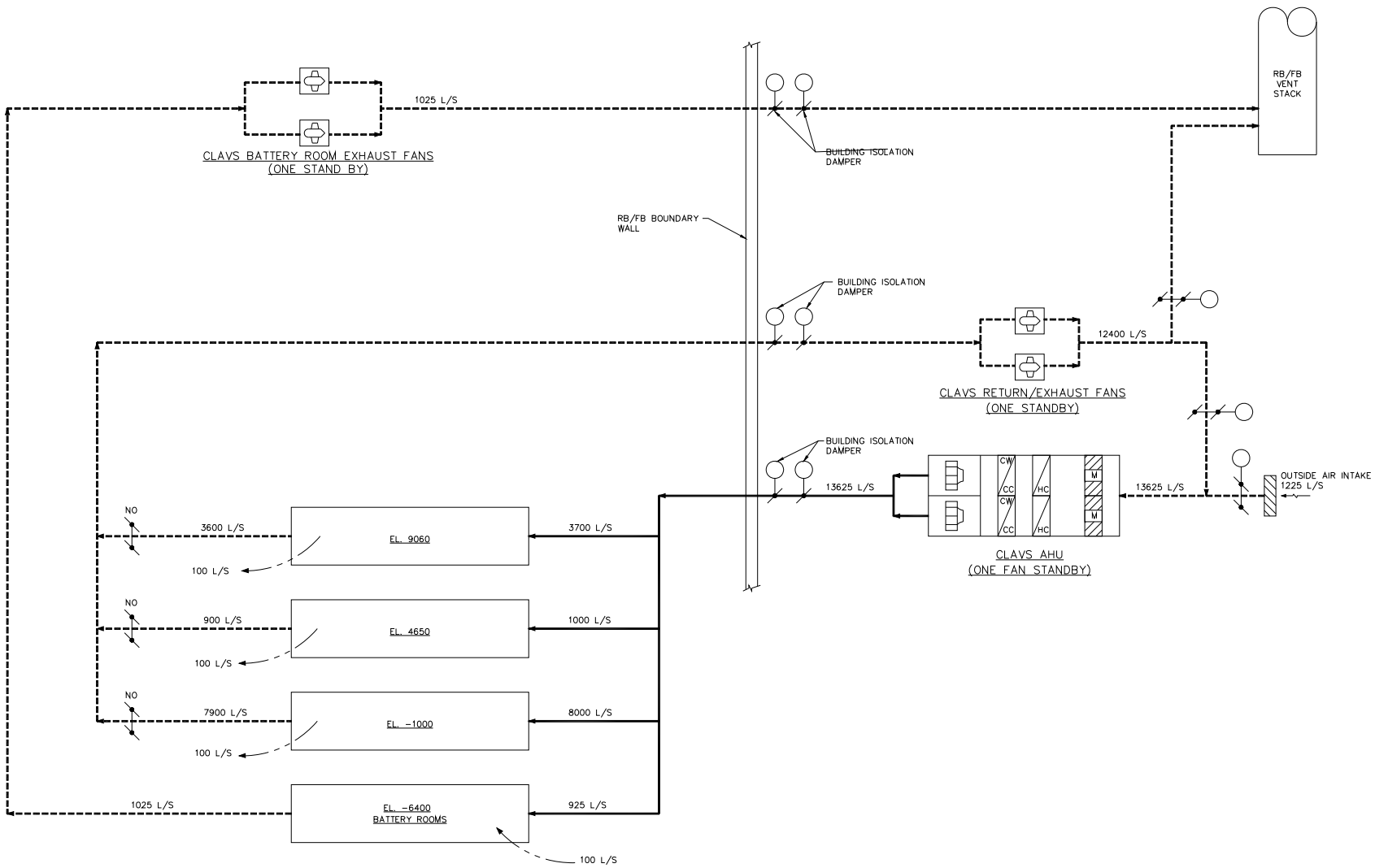

Figure 9.4-9. CLAVS Simplified System Diagram (Typical Train A/B)

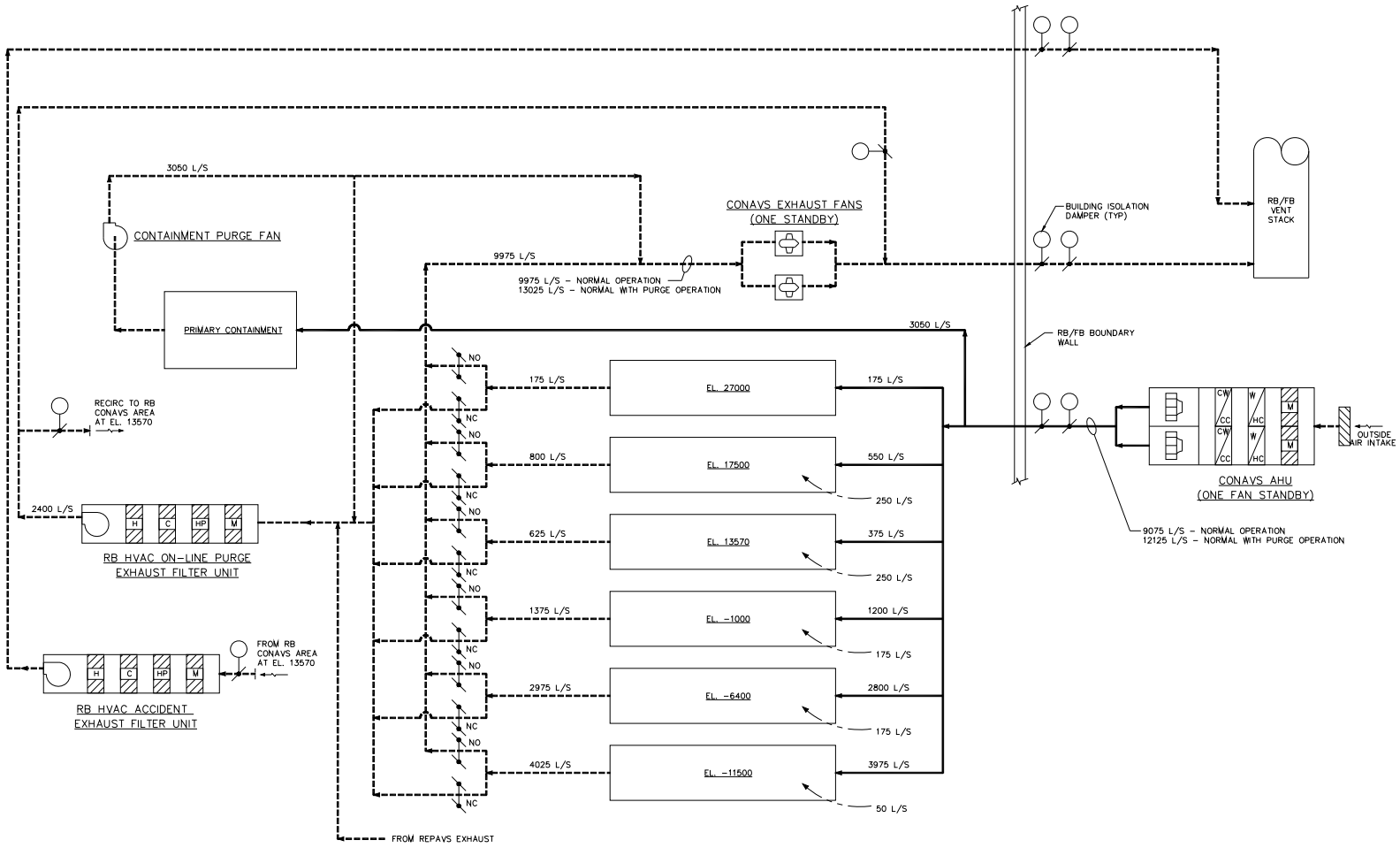

Figure 9.4-10. CONAVS Simplified System Diagram (Typical Train A/B)

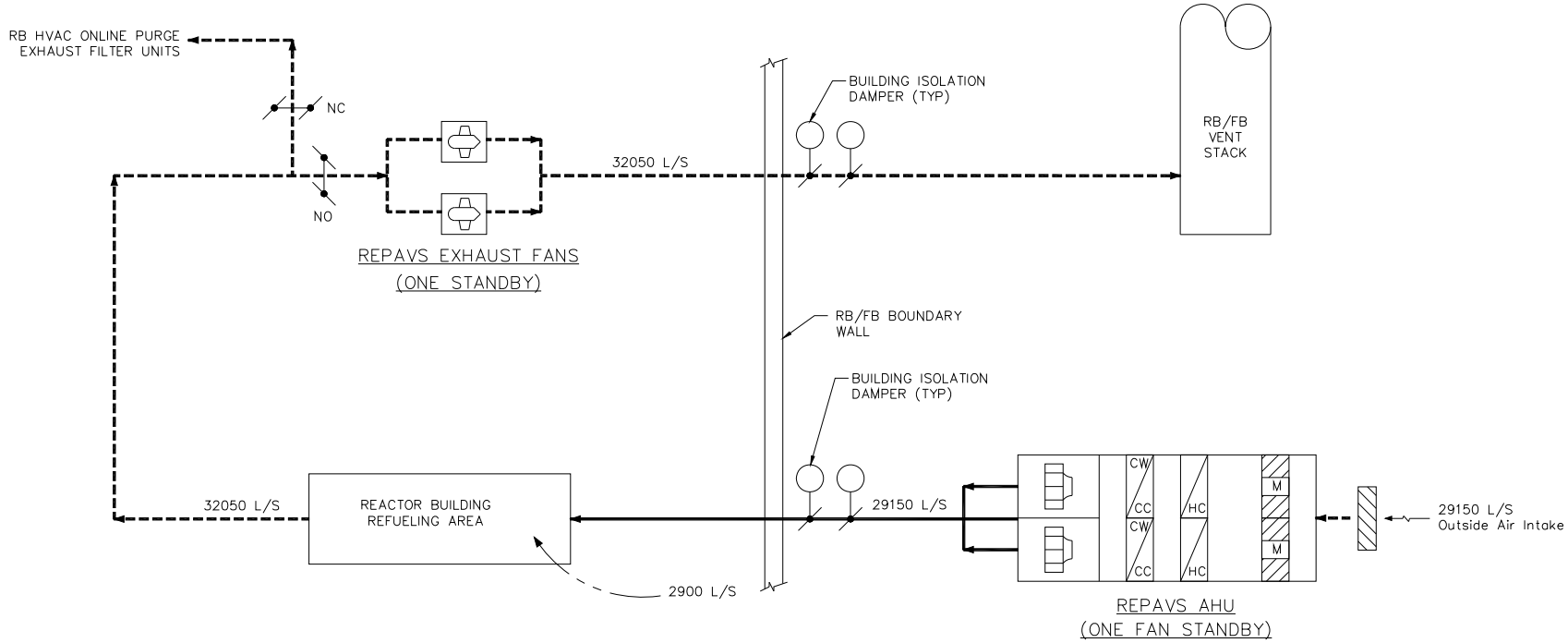

Figure 9.4-11. REPAVS Simplified System Diagram

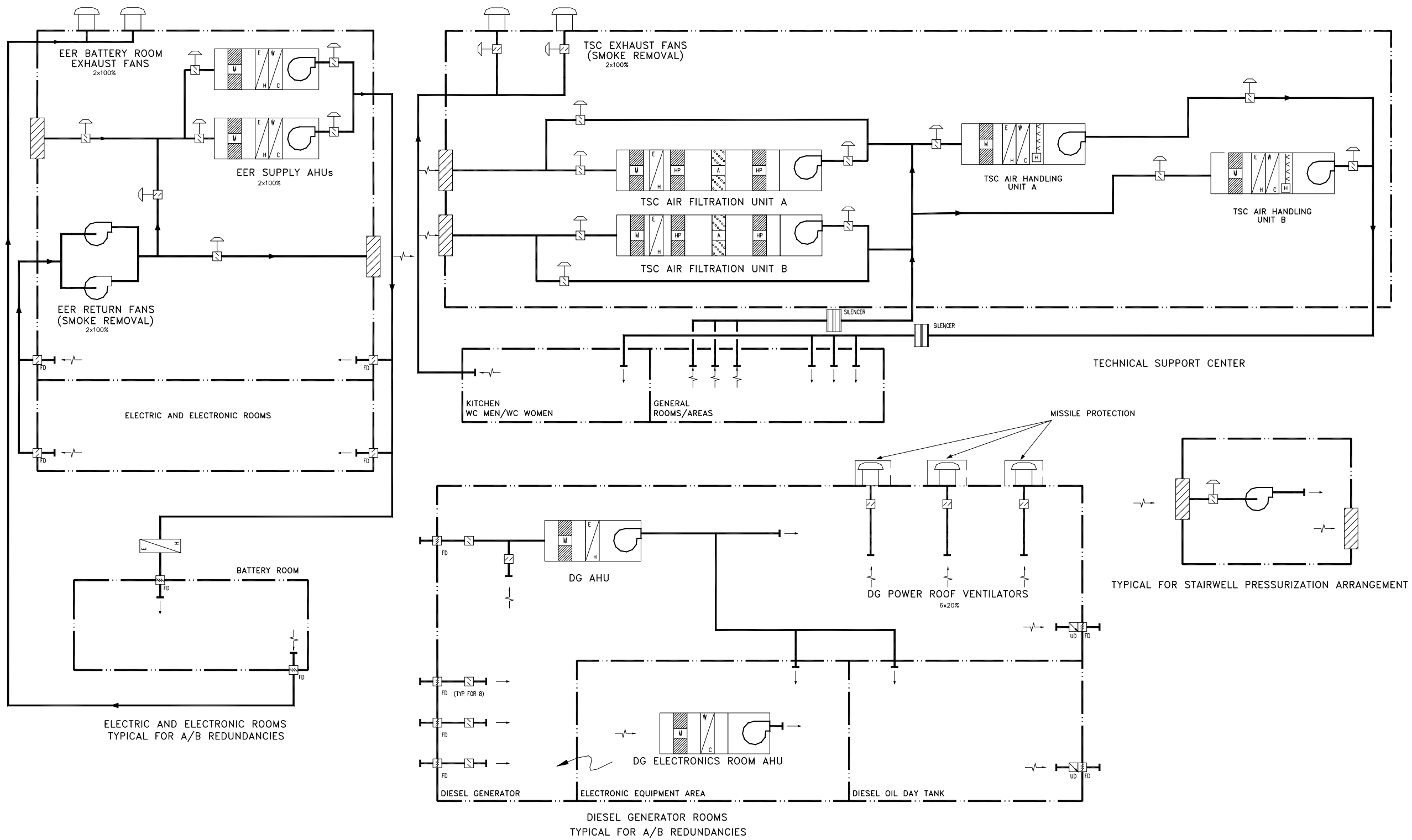

Figure 9.4-12. EBVS Simplified System

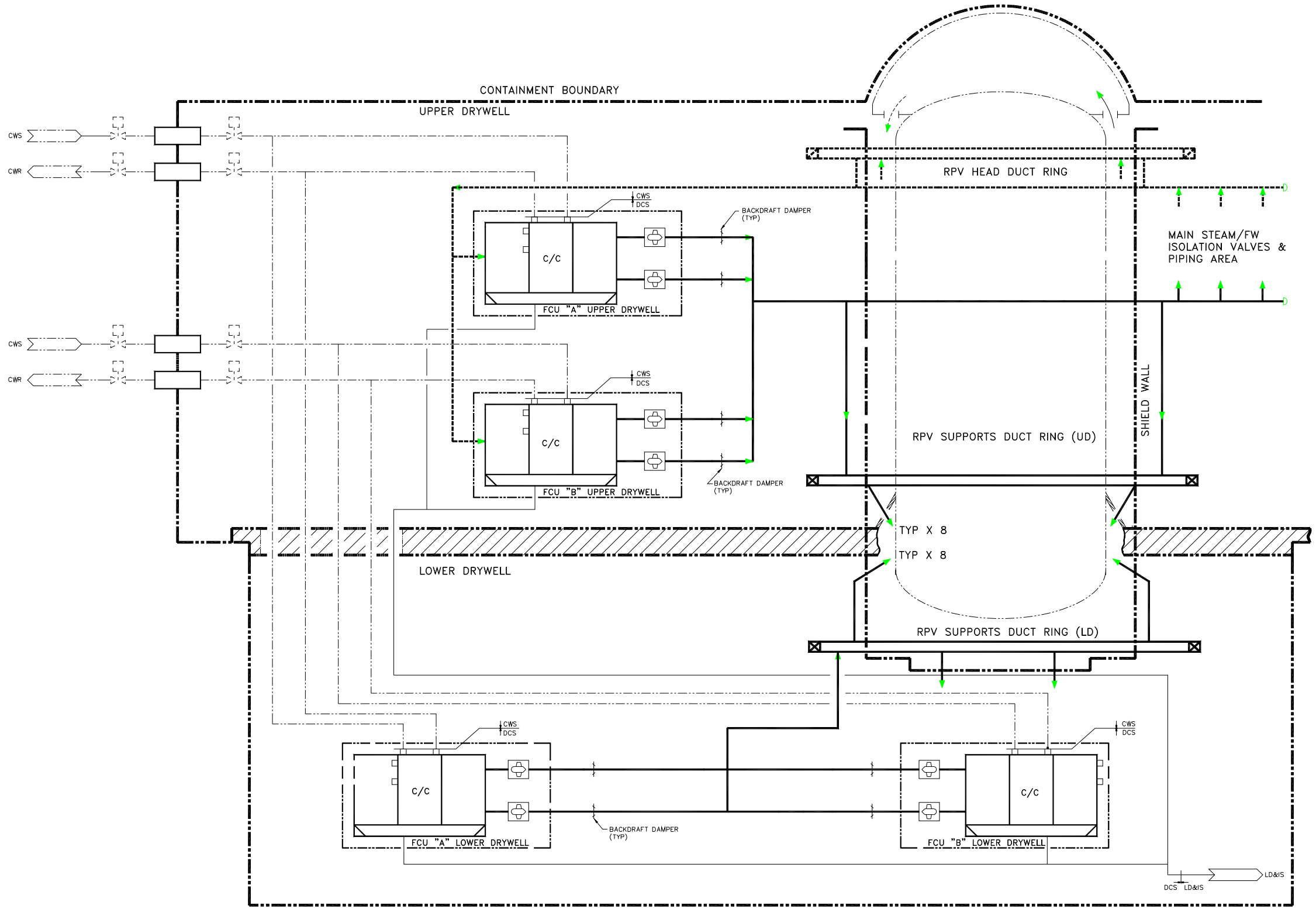

Figure 9.4-13. DCS Simplified System Diagram

Figure 9.4-14. (Deleted)

9.5 OTHER AUXILIARY SYSTEMS

9.5.1 Fire Protection System

The Fire Protection System is comoprised of an integrated complex of components and equipment provided for detection, notification, annunciation, and suppression of fires. In addition to this system, the "fire protection program" includes the concepts of design and layout implemented to prevent or mitigate fires, administrative controls and procedures, and the training of personnel to combat fires. While the NRC fire protection regulations and regulatory guidance discuss protection for equipment that is "important to safety," in the ESBWR, as a matter of establishing design provisions and nomenclature, that scope of equipment is designated as "safety-related." Accordingly, the discussion that follows in the 9.5.1 subsections refers to safety-related equipment rather than important to safety equipment in order to be consistent with the ESBWR design. In addition, the ESBWR design ensures that radioactive releases to the environment in the event of a fire will be minimized and includes protection and separation for areas that may involve a high level of fire hazards or which may contain nonsafety-related equipment necessary to achieve Stable Shutdown (as a passive plant, "safe shutdown" is defined as Stable Shutdown). In all cases, the regulatory requirements are met, as well as the intent of NRC regulatory guidance implementing the regulatory requirements.

9.5.1.1 Design Bases

Safety Design Bases

The Fire Protection System (FPS) does not perform any safety-related function. The FPS connects to the safety-related portion of the Fuel and Auxiliary Pools Cooling System (FAPCS).

The FPS has RTNSS functions as described in Appendix 19A, which provides the level of oversight and additional requirements to meet the RTNSS functions. Performance of RTNSS functions is assured by applying the defense-in-depth principles of redundancy and physical separation to ensure adequate reliability and availability. Performance of RTNSS functions is also assured by applying augmented design standards as described in Subsection 19A.8.3.

Power Generation Design Bases

In accordance with NUREG-0800 SRP 9.5.1 and RG 1.189, fire protection for nuclear power plants uses the concept of defense-in-depth to achieve the required degree of reactor safety by using administrative controls, fire protection systems and features, and safe shutdown capability. These defense-in-depth principles achieve the following objectives:

- To prevent fires from starting;
- To rapidly detect, control, and extinguish promptly those fires that do occur; and
- To provide protection for structures, systems, and components important to safety so that a fire that is not promptly extinguished by the fire suppression activities does not prevent the safe shutdown of the plant and does not significantly increase the risk of radioactive release to the environment.

The ESBWR fire protection program design bases incorporate the following elements:

- To maintain the ability to safely shut down the reactor and keep it shut down by providing adequate separation of safety-related equipment. This capability is to be achievable during all modes of plant operation.
- To minimize the probability of the spread of fire by the use of fire barriers between areas of significant combustible loading; and
- To maintain the ability to minimize the potential for radioactive releases to the environment in the event of a fire.

The ESBWR FPS design bases incorporate the following elements:

- To maintain the ability to safely shut down the reactor and keep it shut down by providing the capability to control the spread of and extinguish the postulated fires in all plant areas by the use of fixed and/or portable fire fighting equipment. This capability is achievable during all modes of plant operation.
- To provide automatic fire detection and annunciation for selected areas of the plant as required by the Fire Hazards Analysis for personnel safety and fire brigade notification.
- To supply the maximum firewater demand at any point throughout the system, with one fire pump out of service.
- To prevent inadvertent operation of the FPS from jeopardizing the capability to achieve safe shutdown of the plant.
- To preclude damage to plant safety-related structures, systems, or components caused by seismic loading of the FPS.
- To keep equipment required for safe shutdown free from fire damage during a safe shutdown earthquake (SSE). To this end, one source of firewater supply, including a water source, two fire pumps and their associated suction and discharge lines; and firewater lines, including standpipes and hose connections, are designed and analyzed to remain functional after an SSE. This includes analysis to the first isolation valve on all branches connected to the seismically analyzed firewater lines.
- To ensure a continuous firewater supply for the fire pumps in the event of failure of one firewater source. Two separate firewater sources are connected to FPS such that there is no interruption in supply and that failure of one water source or its piping does not drain the other source.
- To provide manual suppression capability to all plant areas, including those that have automatic fire suppression systems.
- To ensure that a single active failure in a moderate-energy line cannot impair both the primary and backup fire suppression systems.
- To permit isolation from the fire main or outside hydrants for maintenance or repair without interrupting FPS water supply.
- To ensure at least one effective hose stream can reach any location containing safety-related equipment, for preventing a fire exposure hazard to the equipment.

- To provide a post-accident source of makeup water for IC/PCCS pools and Spent Fuel Pool through piping connections to the Fuel and Auxiliary Pools Cooling System (FAPCS). FPS components located outside the RB supporting FAPCS makeup are designed to Seismic Category I standards and will not fulfill a fire protection function. Fire hydrants, stand pipes, or other large lines do not be attached to the dedicated portion of the FPS designed to provide long term makeup to pools in the RB.
- To provide makeup water for reactor coolant inventory; and
- To have a useful life of 60 years with normal maintenance and replacement of parts/components subject to normal wear and deterioration.

Codes, Standards, and Regulatory Guidance

Table 9.5-1 lists the codes, standards, and guidelines used in the fire protection program and FPS design.

9.5.1.2 System Description

Figure 9.5-1 shows the FPS simplified system diagram for the ESBWR standard plant facilities. Table 9.5-2 lists the FPS component design characteristics.

The FPS is the integrated complex of equipment and components that provides early fire detection and suppression to limit the spread of fires. The FPS is part of the overall fire protection program including the plant design and layout to prevent or mitigate fires and includes administrative controls and procedures.

The type of fire suppression is based on the combustible loading and the extent of safety-related equipment within a fire area. Fixed automatic fire suppression systems are installed in areas identified as having a high fire hazard rating by the Fire Hazards Analysis (FHA) (Appendix 9A). Building standpipes and hose stations are provided in major buildings. Portable fire extinguishers are strategically located throughout the plant in accordance with NFPA 10, except in highly radioactive areas.

An automatic fire detection, alarm, supervisory control, and indication system is also provided in selected areas of the plant, as required by the fire hazards analysis for personnel safety and fire brigade notification.

A main fire alarm panel (MFAP), located in the MCR, monitors and receives system actuation, supervisory, and trouble alarm signals from the individual local panels.

9.5.1.3 Facility Features for Fire Protection

Consistent with applicable safety-related requirements, structures, systems, and components are designed and located to minimize the probability and effect of fires. To the maximum extent practical, noncombustible and fire-resistant materials minimize the combustible loading and thereby reduce the expected duration, severity, and intensity of fires.

Within the structures containing safety-related equipment, interior walls, partitions, structural components, materials for insulation, and radiation shielding are either noncombustible or have low ratings for combustion. The flame spread and smoke development rating of these materials

is 25 or less. Materials having a flame spread and smoke development rating of 50 or more are considered to be combustible when analyzing fire hazards.

Exposed structural steel protecting areas containing safety-related equipment is fireproofed with material with a fire rating of up to three hours as determined from the FHA.

Access stairwells are enclosed in minimum 2-hour rated firewalls and equipped with self-closing fire-rated doors. Openings in fire barriers or firewalls are equipped with fire doors, frames, and hardware rated the same as the barriers they penetrate.

Seismically-supported safety-related circuits and circuit routing that contain raceways comply with Branch Technical Position (BTP) SPLB 9.5-1, except that separation by fire barriers rather than distance is used outside the MCR or containment. Exceptions to this requirement are analyzed and justified as acceptable on an individual basis. The acceptance criterion is that a single fire cannot degrade the performance of more than one division of safe shutdown equipment controlled from the MCR. However, if alternate means of control or indication are provided or available that remain unaffected by the same fire, then exception to the BTP SPLB 9.5-1 requirements for circuit routing and separation may be taken. The alternate means of control or indication are not required to be safety-related. All electrical cables (safety-related and nonsafety-related) conform to IEEE-1202 flame test criteria.

A genereal intent for ESBWR fire protection is to avoid the use of electrical raceway fire barrier systems, relying instead on divisional separation by fire area and structural fire barriers.

9.5.1.4 Fire Protection Water Supply System

Figure 9.5-1 provides a simplified diagram of the primary firewater supply piping and supply piping for ESBWR Standard Plant facilities supported by the secondary firewater supply piping yard loop.

Water Source

Water for the Fire Protection System is supplied from a minimum of two sources: (i) at least one "primary" source to the suctions of primary fire pumps and corresponding jockey fire pump and (ii) at least one "secondary" source to suctions of secondary fire pumps and corresponding jockey fire pump. The primary source is two dedicated, Seismic Category I, firewater storage tanks. Each primary firewater storage tank has sufficient capacity to meet the maximum firewater demand of the system for a period of 120 minutes. The secondary source is an additional firewater storage tank, a cooling tower water basin, or a large body of water, with the minimum capacity to meet the total water demand for a period of at least 120 minutes, but not less than 2082 m^3 (550,000 gallons), per NFPA 804. Water sources that are used for multiple purposes ensure that the required quantity of firewater is dedicated for fire protection use only. The COL applicant will provide the capacity of the secondary firewater source (COL 9.5.1-1-A).

Fire department connections on all major buildings allow a fire department pumper truck to pump water into the FPS as an additional fire protection water supply source.

The primary, Seismic Category I, firewater storage tanks and Seismic Category I diesel pump and fire protection piping provide post-accident makeup water to the IC/PCCS pools and Spent Fuel Pool using FAPCS piping. FPS components located outside the RB supporting FAPCS makeup will not fulfill a fire protection function. Fire hydrants, stand pipes, or other large lines

will not be attached to the dedicated portion of the FPS designed to provide long-term makeup to pools in the RB. This portion of the FPS is RTNSS rather than safety-related because the pools have sufficient capacity, such that makeup is not required until after 72 hours. The primary firewater storage tanks have sufficient capacity to meet the total demand from 72 hours up to 7 days. After 7 days, onsite or offsite makeup sources can be used. A deviation from acceptance criterion II.1.a of SRP 9.1.3 (which requires Quality Group C for Spent Fuel Pool makeup components) is provided in Table 1.9-9. This deviation is acceptable because this function is not required until after 72 hours. RTNSS requirements on the components performing the nonsafety-related makeup water function assure reliability which also justifies the change from Quality Group C to D. Post-accident reactor inventory makeup is provided via a dedicated FAPCS pump located in the Fire Pump Enclosure.

Freeze protection is provided for the primary, Seismic Category I, firewater storage tanks and exposed piping.

Fire Pumps

Two primary fire pumps each provide 100% of the firewater demand to the worst-case fire within the RB, FB, Ancillary Diesel Building and CB and 50% of the firewater demand to the worst-case fire within the Turbine Building (TB). Two secondary fire pumps each provide 50% of the firewater demand for the worst-case fire in the TB and 100% of the firewater demand for the worst-case fire in the remainder of the balance of plant (BOP). All fire pumps are capable of delivering the flow and pressure required to the location that is the most hydraulically remote from the firewater supply source. The two primary fire pumps are located near the CB in a fire pump enclosure (FPE). The two secondary fire pumps are located remote from the other two pumps to avoid any common-location failures. The COL applicant shall provide documentation that the secondary fire protection pump circuit design will supply a minimum of 484 m^3/hr (2130 gpm) with sufficient discharge pressure to develop a minimum of 738 kPaG (107 psig) line pressure at the Turbine Building / yard interface boundary (COL 9.5.1-2-A). For the two primary fire pumps, the lead fire pump is Seismic Category II motor-driven (self cooled) powered by ancillary AC, and the backup is a Seismic Category I diesel-driven fire pump. The diesel-driven pump is an air-cooled pump with skid-mounted auxiliaries and a gravity-drain fuel oil supply. The backup diesel-driven fire pump provides firewater in the event of failure of the motor-driven fire pump or loss of preferred power (LOPP).

For the two non-seismic secondary fire pumps, the lead fire pump is motor-driven and the backup fire pump is diesel-driven. The secondary diesel-driven fire pump provides firewater in the event of failure of the motor-driven fire pump or LOPP.

Two motor-driven jockey pumps, one (1) dedicated for the primary fire protection circuit and one (1) dedicated for the secondary fire protection circuit, are provided to prevent initiation of the primary and secondary motor-driven fire pumps due to minor pressure losses. The motor-driven jockey pumps maintain the system pressure at a minimum of 34.5 kPa (5.00 psi) above the highest start pressure setpoint of the fire pumps.

Booster pumps, where required, maintain minimum standpipe pressure in accordance with NFPA 14. Redundant booster pumps are separated by a three-hour fire-rated wall. The ESBWR design does not require the use of booster pumps to maintain minimum standpipe pressure for the post-SSE requirements for hose station protection. Booster pump installation will be limited

to the secondary circuit to ensure failure will not impact areas containing equipment performing any safe shutdown function.

The fuel oil tank for the primary diesel-driven fire pump has a capacity based on supporting the RTNSS function of the fire pump to provide makeup water to the IC/PCCS pools from 72 hours to seven days after an accident. Because the flowrate required for performing the RTNSS function is less than the flowrate required for supplying firewater, the diesel-driven pump need not operate continuously to supply the required quantity of makeup water to the pools. The fuel capacity required before tank refilling is based on fuel consumption for injecting the required makeup quantity versus operation of the diesel engine for approximately 96 hours. A fuel oil capacity of 3.79 m^3 (1000 gallons) satisfies this requirement.

The fuel oil tank for the secondary diesel driven fire pump has a capacity sufficient to allow operation of the diesel engine for approximately eight hours before refilling based on fuel consumption at rated pump capacity and margin criteria provided in NFPA 20.

9.5.1.5 Firewater Supply Piping, Yard Piping, and Yard Hydrants

Figure 9.5-1 provides a simplified diagram of the primary firewater supply piping and supply piping for ESBWR Standard Plant facilities supported by the secondary firewater supply piping yard loop.

The firewater supply piping consists of buried non-seismic piping (yard main loop), suspended non-seismic piping, and suspended ASME B31.1, either Seismic Category I or II piping (primary piping). The Seismic Category I and II loops are designed to remain functional following a SSE. The primary fire pumps supply firewater to the Seismic Category II loop supplying firewater within the RB, CB, Ancillary Diesel Building and FB. The secondary fire pumps supply firewater directly to the yard main loop. Isolation valves are provided between the non-seismic piping and the suspended ASME B31.1 Seismic Category II piping to ensure functionality of the primary loop following an SSE.

The yard main loop piping is made of code compliant material that is in accordance with NFPA 24 and FM (Factory Mutual) approved for fire main service, e.g., high-density polyethylene with concrete thrust blocks or cement-lined ductile iron piping. Locked-open sectionalizing post-indicator valves installed in the yard main loop permit isolation of any part of the loop without completely removing the system from service. Valves between connections separate individual fire pump connections from the yard main loop.

Check valves are provided between each building connection from the main yard piping loop. Additionally, a check valve is provided in the RB to Turbine Building piping connection to prevent flow from the Turbine Building to the primary loop.

Fire hydrants located at approximately 76.2 m (250 ft) intervals along the yard main loop provide fire-fighting capability, especially in the vicinity of buildings or structures containing combustible materials. The fire hydrants are located no closer than 12.2 m (40 ft) from the buildings and structures protected by the hydrants.

Fire hydrants are protected against freezing and damage from vehicles.

The COL applicant shall provide simplified FPS piping and instrumentation diagrams showing complete site-specific systems (COL 9.5.1-4-A).

9.5.1.6 Manual Suppression Means

Manual fire suppression means are provided for all plant areas. The sprinkler systems and the hose station standpipes have separate connections to the firewater main; therefore, no single failure can impair both systems.

Standpipe and Hose Systems

Standpipes and hose stations are provided in all major buildings. Standpipes in areas adjacent to stairways and other locations provide sufficient hose coverage. Minimum standpipe size is 102 mm (4 inch). Standpipe size for building heights exceeding 30.5 meters (100 feet) is 152 mm (6 inch).

The wet standpipes and hose stations are designed to NFPA 14 Class III Service.

Each Class III hose station is provided with a 64-mm (2.5-inch) hose valve with cap and a 38-mm (1.5-inch) hose valve. 64-mm (2.5-inch) to 38-mm (1.5-inch) reducer is utilized on the 64-mm (2.5-inch) hose valve.

Each Class III hose rack has 30.5 m (100 ft) of 38-mm (1.5-inch) woven jacket, lined fire hose.

The water supply pressure maintains a gauge pressure of 448.2 kPaG (65 psig) at the most hydraulically remote 38-mm (1.5-inch) hose station and 689 kPaG (100 psig) at the most hydraulically remote 64-mm (2.5-inch) hose station. If the gauge pressure at a 38 mm (1.5-inch) hose station exceeds 689 kPaG (100 psig), orifice discs installed in the hose couplings reduce the reaction force at the hose end.

Areas containing equipment required for safe shutdown, standpipes and hose connections for manual firefighting remain functional following an SSE. Provisions are made to supply water to at least two standpipes and hose connections for manual firefighting in areas containing equipment required for safe plant shutdown in the event of an SSE. The piping system serving such hose stations is analyzed for SSE loading and is provided with supports to ensure system pressure integrity. The piping and valves for the portion of the hose standpipe system affected by this functional requirement, as a minimum, satisfy ASME B31.1 requirements.

All rooms within the plant buildings are within the reach of at least one effective hose stream from a Class III hose station. A hose station covers each room not covered by a fixed fire suppression system. Effective hose streams from two separate hose stations cover each room that contains equipment required for safe shutdown that is not protected by a fixed fire suppression system. The need for two-hose-station coverage is also based upon the fire hazard present. Rooms not covered by a fixed fire suppression system and with coverage by only one hose station are furnished with portable fire extinguishers for secondary coverage.

Hose stations also provide secondary coverage for fixed suppression systems.

Hose stations are located outside of highly radioactive areas where possible; however, hose stations are located such that any location that contains or could present a hazard to safety-related equipment can be reached by at least one effective hose stream 9.1 meters (30 feet) with a maximum of 30.5 meters (100 feet) of hose.

Standpipes and hose stations external to containment and portable extinguishers provide protection during refueling and maintenance operations. Hose stations are located such that any

location within containment can be reached by two effective hose streams with a maximum of 61 meters (200 feet) of hose.

Fixed fog hose nozzles protecting high-voltage electrical equipment rooms preclude electrical shock hazards with shutoff capability isolation valves. Adjustable fog and straight stream nozzles are provided for all hose stations located away from high-voltage electrical equipment.

Fire Extinguishers

Portable multipurpose Class ABC dry chemical-type fire extinguishers are provided for general hazard areas throughout the buildings in the plant. Portable carbon dioxide Class BC fire extinguishers are provided for electrical areas. Special use portable extinguishers are provided based upon the hazard present. The fire extinguishers are located in accordance with NFPA 10.

Water Spray for Charcoal Filters

Charcoal filters in the offgas and ventilation systems of the plant are provided with water spray systems for fire protection. Water is supplied to the charcoal by means of fixed piping terminating at the exterior of the equipment assembly with manual shutoff valves. In the event of charcoal ignition, the piping is connected to the firewater supply system through a standard hose or jumper fitting.

9.5.1.7 Fixed Automatic Water Extinguishing Systems

The selection of specific types of fire suppression systems and the areas requiring protection are based on equipment arrangements and combustible loading in each fire area.

Sprinkler piping for areas containing safety-related equipment meets the requirements of NFPA 13 and Seismic Category II criteria (assurance that any failure of FPS piping caused by an earthquake does not damage a safety-related item).

Wet Pipe Sprinkler System

Automatic sprinklers provide protection for the areas identified in the fire hazard analysis, except where conditions dictate the use of other types of systems or fire suppression agents.

Each system consists of a piping network containing water under pressure, and thermally actuated closed-head sprinklers. Water discharges immediately from sprinklers opened by heat from a fire. The wet pipe sprinkler system meets the requirements of NFPA 13.

Preaction Sprinkler System (Manual or Automatic)

The preaction sprinkler system employs thermally actuated closed-head sprinklers attached to piping containing air under pressure. Fire detectors are installed in the same area as the sprinklers. A preaction system is used in areas where there is danger of serious water damage as a result of a leaking automatic sprinkler head, spurious actuation, or a pipe break. The preaction sprinkler system meets the requirements of NFPA 13.

Deluge System (Manual and/or Automatic)

Deluge systems are actuated automatically or manually depending upon the area and the nature of the equipment being protected. Deluge systems employ open head sprinklers or nozzles attached to dry piping and water supply. Fire detectors are installed to cover the protected equipment or are in the same area as the nozzles. Deluge systems are normally used for hazards

requiring an immediate application of water over an entire hazard area. The deluge system meets the requirements of NFPA 15.

9.5.1.8 Foam System

A foam system is provided for concentrated fuel oil or lube oil hazards.

A combination of infrared/ultraviolet detectors and thermal rate compensated detectors are used for fire detection that actuates preaction foam-water sprinkler or deluge foam-water spray systems to protect against inadvertent actuation.

The foam systems meet the requirements of NFPA 11 and NFPA 16.

9.5.1.9 Smoke Detection and Fire Alarm System

Smoke detectors installed in rooms containing safety-related equipment, except containment, and in areas containing significant amounts as determined by the FHA (Appendix 9A) of combustible materials provide early detection and warning of fires. Containment is an inerted space during normal operation. Portable fire detection equipment is used inside containment during maintenance outages when the space is not inerted.

Fire detector types are selected on the basis of the nature and burning characteristics of the materials within the room, and on the basis on the FHA (Appendix 9A). The selection of the detector type also includes specific consideration of the combustion products, type of hazard, and fire load expected as well as the effects of humidity, air velocity, temperature, ambient air conditions, radiation, air pressure, area configuration, and response time required. The detector locations are based upon environmental conditions, maintenance access, and As Low as Reasonably Achievable (ALARA) concerns.

A minimum of two detectors is installed in any single room containing safety-related equipment.

Smoke detection systems for early warning and annunciation of fire conditions are separate from fire detection and releasing devices for suppression system actuation.

Local fire alarm panels continuously monitor the zone and area detection systems and circuits. Upon receipt of an indication of fire from any of the area smoke detectors, the local fire alarm panel activates a visual and audible fire alarm at the panel.

All fire and smoke detection circuits are electrically supervised to detect circuit breaks, ground faults, and power failure. The detector circuits are designed so that the failure, removal, or replacement of a detector does not affect the performance of the fire detection loop. Fire or trouble alarms register on an audible-visual annunciator on a MFAP in the MCR.

Preaction fire detection systems for the RB, FB, Ancillary Diesel Building and CB have 90-hour (minimum) backup battery packs located at the local fire alarm panel (releasing panel). Preaction fire detection systems for the balance of plant (BOP) areas have 24-hour (minimum) backup battery packs located at the local fire control panel (releasing panel), per NFPA 72. The remainder of fire detection and alarm systems has 24-hour (minimum) backup battery packs located at each local fire alarm panel (supervisory panel) and at the MFAP.

Manual fire alarm stations (pull box stations) are provided at the normal exit paths or every 61 meters (200 feet), whichever is less, throughout normally occupied buildings. Manual fire alarm

stations (pull box stations) are provided at exit paths only for unoccupied buildings. Visible fire notification is provided in manned office areas such as in the CB and the Service Building.

9.5.1.10 Fire Barriers

Fire barriers of three-hour fire resistance rating are provided separating:

- Safety-related systems from any potential fires in nonsafety-related areas that could affect the ability of safety-related systems to perform their safety function;
- Redundant divisions or trains of safety-related systems from each other to prevent damage that could adversely affect a safe shutdown function from a single fire;
- Components within a single safety-related electrical division that present a fire hazard to components in another safety-related division; and
- Electrical circuits (safety-related and nonsafety-related) whose fire-induced failure could cause a spurious actuation that could adversely affect a safe shutdown function.

Penetrations through fire barriers are sealed or closed to provide fire resistance ratings at least equal to that of the barrier. Only noncombustible materials qualified per ASTM E-119 are used for construction of fire barriers. Fire dampers protect ventilation duct openings in fire barriers as required by NFPA 90A.

Fire barrier separation of electrical circuits (safety-related and nonsafety-related) whose fire–induced failure could cause a spurious actuation that could prevent safe shutdown per NRC RGs 1.75 and 1.189, GDC 17 and 18, and IEEE Standard 384 is described in detail in DCD Tier 2 Subsection 8.3.1.4.1.

Design features that prevent or mitigate spurious actuations include:

- The ESBWR Distributed Control and Information System (DCIS) is located in four general areas of the plant: 1) The MCR where all four divisions may be found in a common fire area, 2) four safety-related DCIS (Q-DCIS) rooms - one per division, 3) two nonsafety-related DCIS (N-DCIS) rooms that correspond to plant investment protection (PIP) A and (PIP) B DCIS trains; and 4) remote multiplexing unit (RMU) equipment locations throughout the plant (such as the RB, CB, FB, etc).
- The MCR consoles are connected to the equipment in the safety-related or nonsafety-related DCIS rooms via optical fiber; the DCIS equipment rooms are in separate fire areas from each other and from the MCR. The Video Display Units (VDUs) require that at least two distinct operator actions be performed for any actuation to satisfy GEH human factors requirements. Additionally each of the messages associated with those two operator actions are authenticated by sending/receiving addresses, and (for safety related and Diverse Protection System communications) sequence numbering, cyclic redundancy checks and hash functions. At least two distinct actions are required to be performed for any actuation. It is essentially impossible for a smoke or fire-impaired VDU or its controller to inadvertently emit the required commands/authentication once and then again representing the operator actions.
- There are also hard wires between the MCR/Remote Shutdown System (RSS) and actuation equipment that represent "fail safe" functions like reactor scram and turbine

trip. Inadvertent actuation of these functions will not prevent a safe shutdown. In addition, there is no loss of automatic actuation of these functions upon the unlikely loss of manual actuation from the MCR or RSS.

- The two nonsafety-related DCIS equipment rooms and four safety-related DCIS rooms are in separate fire areas and single fires can only affect one division or PIP train at a time. The communication between the controllers in these rooms and their RMUs is protected such that neither fires nor smoke will cause inadvertent triggering of two-out-of-four logic or cause competent inadvertent commands to be sent (nor would it affect the "intelligence" in the remote equipment). A single fire in these areas is not expected to cause inadvertent actuations affecting a safe shutdown.
- The RMUs in the field contain the logic/"intelligence" that responds to the controllers and operates the switches. The MSIV and RPS load drivers open circuits to actuate; these are fail-safe in that inadvertent actuation causes safe shutdown. The switches that operate the various ECCS solenoids or squib igniters are either a series circuit of two (solenoid) or three (squib) switches; the switches (even within the same division) are located in separate cabinets that are in separate fire areas. A single fire could only affect one of the cabinets and therefore could not "hot short" and cause an inadvertent actuation. The logic/"intelligence" in the switches will not close the output contacts on either the loss of communication or incompetent communication from the DCIS equipment room controllers.
- The fire protection program considers multiple hot shorts for any equipment that has hard wires for its power or control circuits that could cause equipment to either actuate or not actuate which could result in the equipment not being able to be placed in its safe-shutdown position. Hard wires that are in conduit do not have to consider hot shorts from conductors/cables that are outside of the conduit. Hard wires in cabinets/panels that are in wire bundles are considered for hot shorts. RG 1.189 Regulatory Position 5.3 separation criteria such as three-hour fire barrier separation between redundant success paths is considered in the safe-shutdown circuit analysis. The fire protection program uses a deterministic analysis approach for the safe-shutdown circuit analysis and, therefore, does not use any performance-based approach like fire modeling that takes into account the location of cables and equipment. This deterministic approach would assume that if a hot short could adversely affect safe-shutdown, then the cable that could cause that hot short would be present or nearby. The fire protection program could take an exception to the above, but this cable routing/arrangement including cabinet bundles would then be controlled by procedure to prevent the safe-shutdown analysis from being invalidated. Exceptions are discussed in Subsection 9.5.1.12.1.1 or 9.A.6.4 as appropriate.

The COL applicant shall provide specific design and certification testing details for fire barriers and electrical raceway fire barrier systems in accordance with applicable sections of NFPA 251, ASTM E-119 and guidance in RG 1.189 (COL 9.5.1-5-A).

9.5.1.11 Building Ventilation

Fire protection/smoke control provisions for ventilation for the various building areas are designed as follows:

Safe egress and safe smoke refuge areas during a fire incident are provided in accordance with NFPA 92A guidelines for building occupants and the fire brigade. The Turbine, Electrical, Reactor, Fuel, Radwaste and Control Buildings are provided with pressurized stairwells, in accordance with International Building Code (IBC) (2003 edition) section 1019.1.8, which requires pressurized stairwells where stairwells serve floors 22.9 m (75 ft.) or more above the lowest level of fire department vehicle access (grade level), or more than 9.1 m (30 ft.) below the level of exit discharge. Per these IBC requirements, pressurized stairwells are not required for the Service Building. NFPA 101 guidelines are utilized for the design and labeling of safe egress routes.

Smoke removal meets NFPA 804 with exception to NFPA 804 Sections 8.4.3 (3) and 8.4.3.2. Automatic sprinkler protection is provided for the high density cable tunnels, fuel oil tank rooms, diesel-generator rooms and a significant portion of the Turbine Building to limit heat and smoke generation. The COL Applicant will include in its operating procedure development program:

- Procedures for manual smoke control by manual actions of the fire brigade for all plant areas in accordance with NFPA 804 guidelines.
- Milestone for completing this category of operating procedures (COL 9.5.1-6-A).

Control Building Smoke Removal

The Control Building (CB) HVAC System (CBVS) provides smoke removal through two CBVS subsystems: Control Room Habitability Subsystem (CRHAVS) and Control Building General Area HVAC Subsystem (CBGAVS). Fire-rated penetration seals and smoke dampers are provided to prevent smoke and hot gases from migrating into other fire areas.

Control Room Habitability Area HVAC Subsystem (CRHAVS)

The MCR is separated from the rest of the CB by a one-hour fire barrier and separated from other major plant areas by three-hour fire barriers.

Manual fire fighting capability in the MCR consists of portable dry Class ABC chemical fire extinguishers. Additionally, hose stations with UL-approved fixed fog nozzles are installed in both stairwells outside the MCR. No hose stations are located within the MCR.

The MCR is provided with smoke detectors that actuate audible and visible alarms on the MFAP in the MCR.

Smoke detection capability in the CRHAVS automatically detects and annunciates the presence of smoke. Upon receipt of the outside air intake smoke alarm, the MCR operator manual action is required to isolate the MCR from the outside air and place the CRHAVS in full recirculation mode. To purge smoke from the MCR when there is no smoke in the outside air intake, the CRHAVS is placed in the smoke purge mode. The smoke purge mode of operation of the CRHAVS is manually initiated by MCR operators. Smoke purge is accomplished by opening the smoke purge subsystem outside air intake dampers and the Smoke Purge Fan exhaust dampers, and starting the Smoke Purge Fan. The CRHAVS Recirculation AHUs, EFUs, or normal outside air intake fans can be operated or secured during smoke purge at the discretion of the MCR operators. Any closed fire dampers in the fire area that are required to be open for smoke purging mode are reopened as part of the smoke purge mode.

Safe shutdown of the plant is not dependent on the operation of the CRHAVS. Two remote shutdown stations are provided inside the RB, which is serviced by a separate ventilation system. Plant shutdown and maintenance of shutdown conditions may be accomplished from these stations.

Control Building General Area HVAC Subsystem

The smoke removal mode of the CBGAVS is manually initiated from the MCR by closing the recirculation damper, de-energizing the normal exhaust fans, and energizing the smoke exhaust fan after its isolation dampers are opened to allow outside air purging of the affected room(s).

Reactor Building Smoke Removal

The RB HVAC System (RBVS) provides smoke removal through three RBVS subsystems: Reactor Building Clean Area HVAC Subsystem (CLAVS), RB Contaminated Area HVAC Subsystem (CONAVS), and the Refueling and Pool Area HVAC Subsystem (REPAVS).

Reactor Building Clean Area HVAC Subsystem

The CLAVS provides smoke removal in the clean areas of the RB. The CLAVS is a recirculation-type ventilation system that uses minimal outside air for fresh air makeup for exhaust fans. Fire, in any of the areas served by CLAVS, is isolated by the closure of the fire dampers in the supply and return air ducts serving the fire area. Area fire detectors annunciate the fire condition in the MCR. After the fire is extinguished, smoke is removed by placing the CLAVS in the smoke removal mode, which closes the recirculation damper, opens the exhaust discharge damper, and restarts the return/exhaust fan. This changes the HVAC operation from recirculating to once-through and vents smoke and heat from the clean areas to the outside atmosphere through the RB/FB vent stack.

Reactor Building Contaminated Area HVAC Subsystem

The CONAVS provides smoke removal in the potentially contaminated areas of the RB. The CONAVS is a once-through ventilation system. In areas served by CONAVS, a fire is isolated by the closure of the fire dampers in the supply and return air ducts serving the fire area. Area fire detectors annunciate the fire in the MCR. After the fire is extinguished, CONAVS provides smoke removal by exhausting air through the exhaust fan to the outside atmosphere through the RB/FB vent stack and by drawing in fresh air from outside. During a radiological event, the exhaust airflow is diverted to the RB HVAC Online purge exhaust filter unit to remove airborne contamination prior to discharge through the RB/FB vent stack.

Refueling and Pool Area HVAC Subsystem

Fire on the refueling floor or in pool areas is annunciated in the MCR. Fire dampers in the supply and return ducts close during a fire. After the fire is extinguished, smoke is removed by placing the REPAVS in the smoke removal mode. REPAVS provides smoke removal by exhausting air through the exhaust fan to the outside atmosphere through the RB/FB vent stack and by drawing in fresh air from outside. During a radiological event, the exhaust airflow is diverted to the RB HVAC online purge exhaust filter unit to remove airborne contamination prior to discharge through the RB/FB vent stack.

Fuel Building Smoke Removal

The FB HVAC System provides smoke removal for the FB. Following a recovery from a fire, the exhaust fans remove smoke from the area by exhausting air to the outside atmosphere.

Electrical Building (EB) Smoke Removal

The EB HVAC System provides smoke removal for the Electrical Building. The smoke removal mode of the EB HVAC System provides smoke removal from the standby diesel generator (SDG) engine rooms and SDG day tank rooms.

Turbine Building Smoke Removal

The TB HVAC System provides smoke removal for the Turbine Building. A fire in the Turbine Building is annunciated in the MCR. Fire dampers in the supply and exhaust ducts close to preclude the spread of a Turbine Building fire to other areas. Following fire suppression in the Turbine Building, fire dampers are opened as appropriate for smoke removal. The smoke removal mode of the TB HVAC System provides smoke removal from the Turbine Building areas. Turbine Building Exhaust (TBE) fans can be operated to expedite smoke removal as described in Subsection 9.4.4.

Ancillary Diesel Building (ADB) Smoke Removal

The ADB HVAC System provides smoke removal for the Ancillary Diesel Building. The smoke removal mode of the ADB HVAC System provides smoke removal from the Ancillary Diesel Generator (ADG) rooms, switchgear rooms, and ADG fuel oil storage tank rooms.

9.5.1.12 Safety Evaluation

The FHA, contained in Appendix 9A, demonstrates the adequacy of the ESBWR fire protection design to provide the required protection in the event of a postulated fire.

The methodology for performing the FHA consistent with the level of ESBWR design completion is described in Appendix 9A.

The FHA includes the following information:

- Fire Protection System description;
- Comparison of the ESBWR Fire Protection Program with NRC Branch Technical Position SPLB 9.5-1, demonstrating conformance of the ESBWR program and design with the guidance in the Branch Technical Position;
- Methodology for evaluation of potential fire hazards; and
- Safe shutdown analyses on a fire area by fire area basis.

Included in the above are complete descriptions of the fire areas, fire loadings in the areas, and fire detection and suppression capabilities provided in each area.

The COL applicant will provide a milestone for confirming the assumptions and requirements of the FHA against the as-built conditions and updating the FHA as necessary. (COL 9.5.1-7-A)

The ESBWR design satisfies the following guidance from the NUREG-0800 SRP 9.5.1 and BTP SPLB 9.5-1:

Guidance — "Therefore, the designers of standard plants have been informed that they must demonstrate that safe shutdown of their designs can be achieved, assuming that all equipment in any one fire area has been rendered inoperable by fire and that reentry to the fire area for repairs and for operator actions is not possible. The control room should be excluded from this approach, subject to the need for an independent alternate shutdown capability that is physically and electrically independent of the control room."

Conformance — The design of the fire barrier system and safe shutdown systems for the ESBWR are such that complete burnout of any single fire area without recovery does not prevent safe shutdown of the plant.

Safe shutdown is achieved primarily by using the Isolation Condenser System (ICS), described in Subsection 5.4.6. This is a system employed for both hot standby and core cooling modes, which can operate at full reactor coolant system pressure, and is thereby able to place the reactor in the core cooling mode immediately after reactor shutdown. Operation of the plant in the long-term cooling mode is automatic. The system does not require any AC power or other support systems such as cooling water.

The system initiation is based on a two-out-of-four logic. Actuation still occurs with one division failed due to a fire.

A Remote Shutdown System is provided to ensure safe shutdown capability. The Remote Shutdown System is physically and electrically independent of the MCR.

Guidance — "Fire protection for redundant shutdown systems in the reactor containment building should ensure, to as great an extent as possible, that one shutdown division is free of damage."

Conformance — The ESBWR design conforms to this guidance in that the relevant redundant systems are separated by fire barriers, or, in the case of the containment, as much separation as possible and by inerting the containment atmosphere during operation to preclude the initiation or propagation of a fire.

Guidance — "Consideration should be given for safety-grade provisions for the fire protection systems to ensure that the remaining shutdown capabilities are protected."

Conformance — Fire protection piping and associated components that could become a hazard during an earthquake are seismically analyzed and supported. Manual suppression capability for safe shutdown equipment areas remains functional following an earthquake. The fire barriers in safety-related areas of buildings are Seismic Category I.

Guidance — "In addition, it should be demonstrated that smoke, hot gases, or the fire suppressant does not migrate into other fire areas to the extent that safe shutdown capabilities, including operator actions, could be adversely affected."

Conformance — The ESBWR fire protection design satisfies this guidance with a combination of fire dampers and other barriers, smoke evacuation capabilities, and minimal required operator actions. Details are provided in the fire hazards analysis in Appendix 9A.

9.5.1.12.1 Design Exceptions

The ESBWR fire protection design follows the recommendations of BTP SPLB 9.5-1 or RG 1.189 with the following exceptions:

9.5.1.12.1.1 No Fire Detection within Electrical Cabinets in Main Control Room Complex

Section C.7.1.4 of BTP SPLB 9.5-1 recommends that electrical cabinets should be protected as described in RG 1.189. Section 6.1.2.2 of RG 1.189 states in part:

"Smoke detectors should be provided in the control room, cabinets, and consoles."

ESBWR consoles and electrical cabinets do not have fire detectors installed inside them, unless identified as a significant fire hazard in the Fire Hazards Analysis.

Justification: The electrical cabinets and consoles contain limited combustibles and are air-cooled so that smoke from an interior fire exhausts to the room. Early warning fire detection, primarily consisting of ionization smoke detectors, is provided in all rooms containing consoles or electrical cabinets. A fire in any single cabinet or console does not disable the capability to safely shut down the plant. Except in the MCR Complex, all safety-related electrical cabinets and consoles are located in divisional rooms, and all divisional rooms are separated from each other by three-hour fire-rated barriers such that a single fire does not affect electrical cabinets or consoles from multiple divisions. The MCR Complex is continuously manned so that any fire is quickly detected and manual fire suppression activities would be initiated quickly upon discovery of a fire. In the unlikely event that a fire in the MCR were to require evacuation, use of either the Division 1 or Division 2 Remote Shutdown Panels (located remotely from MCR, in the RB) enable the operators to bring the reactor to a safe shutdown condition.

9.5.1.12.1.2 No Automatic Fire Suppression in Office Areas of Main Control Room Complex

Section C.8.1.2.c of BTP SPLB 9.5-1 recommends that automatic suppression capability should be provided in the control room complex as described in RG 1.189. Section 6.1.2 of RG 1.189 states in part:

“Peripheral rooms in the control room complex should have automatic water suppression…”

The office spaces contained in the ESBWR MCR complex do not have automatic fire suppression systems installed, unless identified as a significant fire hazard in the Fire Hazards Analysis.

Justification: The MCR complex is considered to be a low risk fire area, due to the lack of high- or medium-voltage equipment or cabling. Interior finishing materials within the MCR complex are noncombustible or have a flame spread and smoke developed rating of 25 or less. The amount of transient combustibles within this fire area is limited. Papers within the MCR complex are stored in file cabinets, bookcases, or other storage locations except when in use. Ionization or photoelectric smoke detectors are installed throughout the MCR complex to provide early warning of fire during the incipient stage. The MCR complex is continuously manned so that any fire is quickly detected and manual fire suppression activities would be initiated quickly upon discovery of a fire. Should manual fire fighting in the MCR complex be necessary using either portable fire extinguishers or hand held fire hoses, accumulation or drainage of firewater does not affect the ability to safely shut down the reactor. If the firewater

is assumed to transport immediately to the basement of the CB, the resulting accumulation of water does not affect safety-related equipment located in the basement. In either case, the fire fighting activities do not prevent the reactor from being safely shut down.

Finally, in the unlikely event that a fire in the MCR were to require evacuation, use of either the Division 1 or Division 2 Remote Shutdown Panels (located remotely from MCR, in the RB) enable the operators to bring the reactor to a safe shutdown condition.

9.5.1.12.1.3 No Automatic Fire Suppression Below Raised Floor in Main Control Room Complex

Section C.8.1.2.c of BTP SPLB 9.5-1 recommends cable raceways under raised floors should be reviewed to determine if adequate fire detection and suppression are provided for potential fires in these areas. Section 6.1.2.1 of RG 1.189 states in part:

"...Fully enclosed electrical raceways located in under-floor and ceiling spaces, if over 0.09 m^2 (1 sq ft) in cross-sectional area, should have automatic fire suppression inside."

The MCR complex has a raised floor over a subfloor volume, which is used for routing of cables between the electrical cabinets, control panels, computer equipment, and the divisional electrical rooms. Divisional separation of the subfloor cabling is maintained per the requirements of IEEE 384. The subfloor volume includes full fire detection but does not include any automatic fire suppression system, unless identified as a significant fire hazard in the Fire Hazards Analysis.

Justification: The MCR complex and subfloor volume is considered to be a low risk fire area, due to the lack of high- or medium-voltage equipment or cabling. The characteristics of the subfloor cables are such that the probability of a fire ignition is very low and any fire that were to occur would be self-extinguishing. There are no transient combustibles stored in the subfloor volume during normal activities. Ionization smoke detectors are installed throughout the subfloor volume to provide early warning of fire during the incipient stage. The raised floor consists of noncombustible sectional panels that can be individually removed to provide fire-fighting access to a subfloor fire. Because the MCR is continuously manned, manual fire suppression activities would be initiated quickly upon discovery of a fire in the subfloor volume. Since fire resistant cables are used, the amount of water needed to extinguish a fire within the subfloor volume is relatively small. Any water that is introduced into the subfloor volume can be removed by floor drains in the subfloor volume or through the use of temporary portable sump pumps. Accumulation of water in the subfloor volume is limited in depth to less than the raised floor height and does not adversely effect water sensitive safety-related equipment, which is installed above the raised floor. Effectiveness of a permanently installed fire suppression system within the subfloor volume may be somewhat limited due to the relatively small height between raised floor and top of cabling, as well as physical barriers within the subfloor volume to meet IEEE 384 separation criteria. Not including automatic fire suppression within the subfloor volume has the indirect benefit of avoiding the potential for missiles (from gaseous suppression cylinders) or flooding/wetting (from water piping) during maintenance or testing activities to impact safety-related equipment within the MCR complex.

Finally, in the unlikely event that a fire in the MCR were to require evacuation, use of either the Division 1 or Division 2 Remote Shutdown Panels (located remotely from MCR, in the RB) enable the operators to bring the reactor to a safe shutdown condition.

9.5.1.12.1.4 Standby Diesel Day Tank Capacity within Building

Section C.8.1.8.b of BTP SPLB 9.5-1 recommends that diesel day tanks comply with RG 1.189. Section 6.1.8 of RG 1.189 states in part:

"Day tanks with total capacity up to 4164 L (1100 gallons) may be located in the diesel generator area under the following conditions:

- The day tank is located in a separate enclosure with fire resistance rating of at least 3 hours."

Based on the size of the nonsafety-related standby diesel generators (SDG), the capacity of each of the standby diesel day tanks could exceed 4164 L (1100 gallons) to allow enough fuel for at least 8 hours of diesel operation at the maximum load demand.

Technical Justification: The ESBWR design includes two independent and physically separated nonsafety-related SDGs, capable of providing the electrical load as described in Subsection 8.3.1.1.8 and shown on Figure 8.1-1. Neither SDG is necessary to achieve and maintain safe shutdown conditions for the 72-hour period following an accident or fire event. Each day tank is located in the Electrical Building in a dedicated three-hour fire rated compartment. There is no safety-related equipment located in the same building as the day tank rooms. Additionally, the day tank rooms are located in individual fire areas adjacent to the SDG rooms and are positioned such that the three-hour fire rated walls, ceiling, and floor of the day tank room are not common to the other redundant SDG.

Each day tank room is protected by a foam water deluge system that can deliver foam to the room for a minimum of 30 minutes without operator intervention. The day tank is seismically designed and supported. Potential ignition sources, with enough energy to ignite diesel fuel, are limited inside the day tank rooms. Furthermore, the supply of fresh air to support combustion is limited. In the event of a fire, the automatic foam water deluge system is designed to extinguish a fire in this room in 10 minutes. In the unlikely event the day tank was to fail, the entire contents of the day tank plus the foam water volume can be contained in the sunken volume of the day tank room. Additional foam capacity beyond 10 minutes provides added assurance that a postulated fire is extinguished.

In the event that the fuel oil transfer line from the day tank to the SDG were to fail outside of the day tank room, the curbed area within the SDG room can accommodate the contents of the day tank plus the foam water volume applied by the preaction foam water automatic sprinkler system. This automatic sprinkler system is designed to extinguish a fire within the SDG room within 10 minutes. In the unlikely event the fire is still not extinguished, the SDG room can be isolated by closing doors and dampers to allow the fire to burn out on its own without spreading to other fire areas. Alternatively, if the fire brigade is required to fight the fire manually, the curbed area within the SDG room can accommodate additional water/foam application from two hand-held foam hose lines before reaching the lowest door opening. The lowest door opening to these rooms are the exterior equipment doors which could be opened if fire fighting activities necessitate so that any overflow would spill outside the building and not spread to other parts of the electrical building. Therefore, any overflow from the sump area of the room does not affect any other equipment, nor does it affect safety-related equipment or equipment needed for support of safety-related equipment.

9.5.1.12.1.5 Ancillary Diesel Fuel Oil Tank Capacity within Building

Section C.8.1.8.b of BTP SPLB 9.5-1 recommends that diesel day tanks comply with RG 1.189. Section 6.1.8 of RG 1.189 states in part:

"Day tanks with total capacity up to 4164 L (1100 gallons) may be located in the diesel generator area under the following conditions:

- The day tank is located in a separate enclosure with fire resistance rating of at least 3 hours."

The capacity of each of the ADG day tanks will not exceed 4164 L (1100 gallons); however, the main fuel oil storage tanks for these diesels will exceed this capacity. The main fuel oil storage tanks are located in separate fire areas in the ADB; in close proximity to the ADGs, but separated by 3-hour rated fire barriers.

Technical Justification: The ESBWR design includes two independent and physically separated nonsafety-related ADGs capable of providing the electrical load as described in Subsection 8.3.1.1.9 and shown in Figure 8.3-3. Neither ADG is necessary to achieve and maintain safe shutdown conditions for the 72-hour period following an accident or fire event. Each fuel oil storage tank is located in the ADB in a dedicated three-hour fire rated compartment. There is no safety-related equipment located in the same building as the fuel oil tank rooms. Additionally, the fuel oil tank rooms are located in individual fire areas adjacent to the ADG rooms and are positioned such that the three-hour fire rated walls, ceiling, and floor of the fuel oil storage tank room are not common to the other redundant ADG.

Each fuel oil storage tank room is protected by a foam water deluge system that can deliver foam to the room for a minimum of 30 minutes without operator intervention. The fuel oil tank is seismically designed and supported. Potential ignition sources, with enough energy to ignite diesel fuel, are limited inside the fuel oil storage tank rooms. Furthermore, the supply of fresh air to support combustion is limited. In the event of a fire, the automatic foam water deluge system is designed to extinguish a fire in this room in 10 minutes. In the unlikely event the fuel oil storage tank was to fail, the entire contents of the tank plus the foam water volume can be contained within the fuel oil storage tank room. Additional foam capacity beyond 10 minutes provides added assurance that a storage fire is extinguished.

In the event that the fuel oil transfer line from the fuel oil tank to the ADG were to fail outside of the fuel oil storage tank room, the curbed area within the ADG room can accommodate the contents of the day tank plus the foam water volume applied by the preaction foam water automatic sprinkler system. This automatic sprinkler system is designed to extinguish a fire within the ADG room within 10 minutes. In the unlikely event the fire is still not extinguished, the ADG room can be isolated by closing doors and dampers to allow the fire to burn out on its own without spreading to other fire areas. Alternatively, if the fire brigade is required to fight the fire manually, the curbed area within the ADG room can accommodate additional water/foam application from two hand-held foam hose lines before reaching the lowest door opening. The lowest door opening to these rooms are the exterior equipment doors which could be opened if fire fighting activities necessitate so that any overflow would spill outside the building and not spread to other parts of the building. Therefore, any overflow from the sump area of the room does not affect any other equipment, nor does it affect safety-related equipment or equipment needed for support of safety-related equipment.

9.5.1.12.1.6 Allowing Continued Diesel-Generator Operation During a Fire

Section 8.1.8.c of BTP SPLB 9.5-1 recommends that impacts of suppression systems on operating generators should be addressed in the fire hazard analysis. Section 6.1.8 of RG 1.189 states in part:

"Automatic fire suppression should be installed to suppress or control any diesel generator or lubricating oil fires. Such systems should be designed for operation when the diesel is running without affecting the diesel."

The automatic sprinkler systems in the standby and ancillary diesel generator rooms are installed to extinguish any fire in those rooms and do not place restrictions on the positioning and direction of the application of the fire suppressant.

Justification: The automatic sprinkler systems used in the standby and ancillary diesel generator rooms are designed to prevent inadvertent actuation by utilizing preaction automatic sprinkler type. The sprinkler piping and closed head sprinklers are pneumatically supervised for leakage, and any inadvertent actuation of the deluge valve during testing or maintenance does not result in unintentional water release due to the normally closed sprinkler heads.

Two actuation signals are required to automatically actuate the deluge valve, the first of which annunciates an alarm to alert the operators to any potential problems. Automatic actuation of the sprinkler system to release water requires three independent events: 1) detection of a specific range of infrared wavelengths, consistent with burning oil, by at least one infrared detector; 2) detection of a significant heat release by at least one heat detector; and, 3) opening of at least one fusible link sprinkler head. Furthermore, each redundant standby and ancillary diesel generator has its own dedicated fire detectors and preaction deluge valve for the control of the fire sprinklers in that room, and loss of power to the deluge valve does not cause actuation.

The ESBWR design includes two independent and physically separated nonsafety-related standby diesel generators, either of which is capable of providing the full electrical load for the redundant nonsafety-related electrical buses. The ESBWR design also includes two independent and physically separated nonsafety-related ancillary diesel generators, either of which is capable of providing redundant post-accident power (Reference Subsection 8.3.1.1.9). None of these diesel generators is necessary to achieve and maintain safe shutdown conditions for the 72-hour period following an accident or fire event. The ESBWR design also includes four independent and physically separated safety-related divisions, any two of which are capable of bringing the plant to a safe shutdown in the event of a fire. For design purposes, it is assumed that a fire anywhere in a fire area results in the immediate loss of function of all equipment associated with that division. Even with this conservative assumption, the remaining independent safety-related divisions are available for full utilization by the operators.

9.5.1.12.1.7 No Automatic Fire Suppression in Computer Rooms Containing Safety-Related Equipment

Section 8.1.4 of BTP SPLB9.5-1 recommends protecting computer rooms with fire protection systems as described in RG 1.189. Section 6.1.4 of RG 1.189 states in part:

"Computer rooms for computers performing functions important to safety that are not part of the control room complex should be separated from other areas of the plant by barriers having a

minimum fire resistance rating of 3 hours and should be protected by automatic detection and fixed automatic suppression."

ESBWR computer rooms containing safety-related equipment do not have fire suppression installed inside them.

Justification: Computer rooms are considered to be low risk fire areas, due to the lack of high- or medium-voltage equipment or cabling. Interior finishing materials within computer rooms are noncombustible. The amount of transient combustibles within computer rooms is limited. Papers within computer rooms, if any, are stored in file cabinets, bookcases, or other storage locations except when in use.

Ionization smoke detectors are installed throughout computer rooms to provide early warning of fire during the incipient stage. The MCR Complex is continuously manned so that any fire is quickly detected and manual fire suppression activities are initiated quickly upon discovery of a fire in a computer room. Should manual fire fighting in a computer room be necessary using either portable fire extinguishers or hand held fire hoses, accumulation or drainage of firewater does not affect the ability to safely shutdown the reactor. If the firewater is assumed to transport immediately to the basement of the building, the resulting accumulation of water does not affect safety-related equipment located in the basement. In either case, the fire fighting activities does not prevent the reactor from being safely shutdown.

Except in the MCR Complex, all safety-related computers are located in divisional rooms, and all divisional rooms are separated from each other by 3-hour fire-rated barriers such that a single fire does not affect computer equipment from multiple divisions. In the unlikely event that a fire in the MCR were to require evacuation, use of either the Division 1 or Division 2 Remote Shutdown Panels (located remotely from MCR, in the RB) enable the operators to bring the reactor to a safe shutdown condition.

9.5.1.12.1.8 Exceed Maximum Hose Length to Reach Safety-Related Equipment in Containment

Section 6.4.1 of BTP SPLB 9.5-1 recommends standpipe and hose stations meet the provisions of RG 1.189. Section 6.1.1.2 of RG 1.189 states in part:

"Interior manual hose installation should be able to reach any location that contains, or could present a fire exposure hazard to, equipment important to safety with at least one effective hose stream. To accomplish this, standpipes with hose connections equipped with a maximum of 30.5 m (100 feet) of 38 mm (1-1/2-inches) woven-jacket, lined fire hose and suitable nozzles should be provided in all buildings on all floors."

Standpipes and hose stations external to containment and portable extinguishers provide protection during refueling and maintenance operations. The 30.5 m (100 ft.) hose coverage requirement cannot be met in containment for all areas with standpipes located outside containment. ESBWR design provides for equipment in the containment to be reached by two effective hose streams from fire hoses with a maximum length of 200 feet of fire hose from two different standpipes located outside the containment.

Justification: Risk and consequences during power operations are reduced because the containment is inerted at power. Although fire damage may result to both Control Rod Drive (CRD) system and Hydraulic Control Unit (HCU) components from a postulated fire within the lower drywell during a plant outage, there would be no effect to plant safe shutdown because all

control rods would already have been inserted into the reactor vessel at the onset of the outage and prior to removing the inerted environment. Further backup of reactor scram capability and maintenance of safe shutdown can be provided by other systems (such as Standby Liquid Control). Based on the low safety significance and the ability to meet a fire exposure hazard from two standpipes outside the containment using two fire hoses, this exception is acceptable. In addition, portable extinguishers are provided as required for manual firefighting capability during maintenance activities introducing additional ignition sources or significant quantities of combustibles.

9.5.1.13 Inspection and Testing Requirements

Preoperational inspection and testing requirements for each fire protection system are described in Subsection 14.2.8.1.39. Periodic inspection and testing to assure system functionality is conducted in accordance with applicable codes and approved procedures.

9.5.1.14 Instrumentation Requirements

Controls and instrumentation are provided for a fully functioning system. There are three main types of FPS instrumentation: instrumentation supporting fire detection, instrumentation supporting automatic suppression systems, and instrumentation supporting firewater delivery.

Instrumentation for the Fire Detection System

Instrumentation for the fire detection system provides signals for early detection and warning of fires. Local fire alarm panels per NFPA 72 supervise fire and smoke detectors. The local fire alarm panels are in turn connected to the alarm MFAP via a dedicated data link. Signals transmitted include detector status (normal, alarm, supervisory, trouble) as well as local fire alarm panel status.

Upon receipt of a signal from any of the area fire detectors, audible and visual annunciation is activated at the MFAP in the MCR and at the local fire alarm panel.

Instrumentation for fire detection is either FM approved or UL listed, where available.

Instrumentation Supporting Fire Suppression Systems

Each fire suppression system automatically actuated by a fire detection system has the control logic and capability for manual actuation available at the local fire alarm panel for the protected area. Remote manual actuation of these suppression systems is also available from the MCR. Automatic sprinkler systems that do not require separate detection systems for actuation are not equipped with manual actuation means.

Instrumentation for fixed fire suppression systems provides local and remote monitoring capability for the suppression system status. All instruments for automatic suppression systems are wired to the local fire alarm panels for control. Dedicated data links transmit command and status information to and from the local fire alarm panels and the MFAP in the MCR.

All instrumentation for automatically actuated fire suppression systems is either FM approved or UL listed, where available.

Instrumentation Supporting Firewater Delivery

Instrumentation supporting firewater delivery provides status indication of firewater storage level, firewater main pressure, primary and secondary jockey pump status, and primary and secondary fire pump status conditions.

The primary motor-driven fire pump is designed to start, if the primary jockey pump cannot maintain pressure in the primary loop. If pressure is not maintained in the primary loop with the motor-driven fire pump, then the primary Seismic Category I diesel-driven fire pump initiates. The secondary motor-driven fire pump initiates if the secondary jockey pump cannot maintain pressure in the yard loop. If pressure is not maintained in the yard loop with the secondary motor-driven fire pump, then the secondary diesel-driven fire pump initiates. All fire pumps are stopped manually. Any fire pump can be started manually from the MFAP in the MCR or locally.

Pressure instrumentation automatically starts and stops the primary and secondary motor-driven jockey pumps.

9.5.1.15 Fire Protection Program

The ESBWR Fire Protection Program is established to ensure that a fire will not prevent safe shutdown of the plant and will not endanger the health and safety of the public. Fire protection at the plant uses a defense-in-depth concept that includes fire prevention, detection, control and extinguishing systems and equipment, administrative controls, procedures, trained personnel and the shutdown capability. The COL applicant shall provide a milestone for implementation of the applicant's Fire Protection Program (COL 9.5.1-8-A).

9.5.1.15.1 Fire Protection Program Criteria

The ESBWR Plant Fire Protection Program is based on the criteria of several industry and regulatory documents that are referenced in Table 9.5-1.

9.5.1.15.2 Organization and Responsibilities

The COL applicant shall provide a description of the Fire Protection program (COL 13.4-1-A).

The on-duty Shift Supervisor has responsibility for taking certain actions based on an assessment of the magnitude of the fire emergency. These actions include safely shutting down the plant, making recommendations for implementing the Emergency Plan, notification of emergency personnel and requesting assistance from off-duty personnel, if necessary. Emergency Plan consideration of fire emergencies includes the guidance of RG 1.101.

The site engineer in charge of the Fire Protection Program is responsible for the following:

- Ensuring that programs and periodic inspections are implemented to;
  - Minimize the amount of combustibles in areas containing safety-related equipment; and
  - Determine the effectiveness of housekeeping practices.
- Assure the availability and acceptability of the following:
  - Fire Protection System and components;

  - Manual fire fighting equipment;
  - Emergency breathing apparatus;
  - Emergency lighting;
  - Communication equipment;
  - Fire barriers including fire rated walls, floors and ceilings, fire rated doors, dampers, fire stops and wraps, and fire retardant coatings. Procedures specifically address the administrative controls to be put in place, including fire watches, when a fire barrier is breached for maintenance; and
  - Assure prompt and effective corrective actions are taken to correct conditions adverse to fire protection and preclude their recurrence.
- Ensuring that periodic maintenance and testing of fire protection systems, components, and manual fire fighting equipment is conducted, test results are evaluated, and the acceptability of systems under test is determined in accordance with established plant procedures;
- Designing and selecting equipment related to Fire Protection;
- Reviewing and evaluating proposed work activities to identify potential transient fire loads;
- Managing the Plant Fire Brigade, including;
  - Developing, implementing and administering the Fire Brigade Training Program;
  - Scheduling and ensuring that fire brigade drills are conducted;
  - Critiquing fire drills to determine how well training objectives are met;
  - Performing a periodic review of the fire brigade roster and initiating changes as needed;
  - Maintaining the fire training program records for members of the fire brigade and other personnel; and
  - Ensuring that sufficient fire brigade personnel are identified at the beginning of each shift.
- Developing and conducting the Fire Extinguisher Training Program, or ensuring that it is conducted;
- Implementing a program for indoctrination of personnel gaining unescorted access to the protected area in appropriate procedures which implement the fire protection program, such as fire prevention and fire reporting procedures, plant emergency alarms, including evacuation;
- Implementing a program for instruction of personnel on the proper handling of accidental events such as leaks or spills of flammable materials;
- Preparing procedures to meet possible fire situations in the plant and for assuring assistance is available for fighting fires in radiological areas;

- Implementing a program that utilizes a permit system that controls and documents inoperability of fire protection systems and equipment. This program also initiates proper notifications and compensatory actions, such as fire watches, when inoperability of any fire protection system or component is identified;
- Developing and implementing preventive maintenance, corrective maintenance, and surveillance test fire protection procedures;
- Ensuring plant modifications, new procedures and revisions to procedures associated with fire protection equipment and systems that have significant impact on the Fire Protection Program are reviewed by an individual who possesses the qualifications of a fire protection engineer; and
- Ensuring a continuing evaluation of fire hazards during construction or modification of other units on the site. Additional fire barriers, fire protection capability and administrative controls are provided as necessary to protect the operating unit(s) from construction or modification activities.

9.5.1.15.3 Fire Protection Program Staffing Requirements

The COL applicant shall provide a description of the fire protection program staffing requirements and the organization of the Fire Brigade (COL 13.1-1-A).

9.5.1.15.4 Onsite Fire Operations Training

The COL Applicant will provide a milestone for implementing the provisions for manual fire-fighting capability for all plant areas (COL 9.5.1-10-A).

9.5.1.15.4.1 General

Fire protection training consists of training of personnel in three specific categories:

- Employees designated to be members of the station fire brigade;
- Employees assigned to the fire protection staff; and
- Offsite fire departments.

Specific training requirements for each of the above categories of personnel are described in the following sections.

9.5.1.15.4.2 Fire Brigade Training

The qualifications of the fire brigade personnel are described in RG 1.189, Regulatory Position 1.6.4.1. The brigade leader and at least two members should have sufficient training in or knowledge of plant systems to understand the effects of fire and fire suppressants on safe-shutdown capability. Such competence by the brigade leader may be evidenced by possession of an operator's license or equivalent knowledge of plant systems.

Nuclear power plants staffed with a dedicated professional fire department may utilize a fire team advisor to assess the potential safety consequences of a fire and advise the control room and incident commander. The fire team advisor should possess an operator's license or equivalent knowledge of plant systems and be dedicated to supporting the fire incident commander during

fire emergency events. The fire team advisor does not need to meet the qualifications of a brigade member, but if the team advisor does not meet the qualifications of a fire brigade member, there should be five available qualified fire brigade members in addition to the fire team advisor.

Personnel assigned as fire brigade members receive formal training prior to assuming brigade duties. The course subject matter is selected to satisfy the requirements of RG 1.189. In addition, course material selection also includes guidance from NFPA Codes 600 and 1500 as appropriate. Additional training may also include material selection from NFPA 1404 and 1451.

Course material includes the following classroom instruction:

- Chemistry of fire;
- Classification of fires and principles of extinguishment;
- Fire prevention and inspection techniques;
- Fire protection systems;
- Radiological safety aspects of fires at nuclear facilities;
- Indoctrination of plant firefighting plans with specific identification of individual responsibilities;
- Identification of the type and location of fire hazards and associated types of fires that could occur in the plant;
- The toxic and corrosive characteristics of expected products of combustion;
- Identification of the location of firefighting equipment for each fire area and familiarization with the layout of the plant, including access and egress routes;
- The proper use of available firefighting equipment and the correct method of fighting each type of fire including: fires in energized electrical equipment, fires in cables and cable trays, hydrogen fires, fires involving flammable and combustible liquids or hazardous process chemicals, fires resulting from construction or modifications (welding), and record file fires;
- The proper use of communication, lighting, ventilation, and emergency breathing equipment;
- The proper method for fighting fires inside buildings and confined spaces;
- The direction and coordination of firefighting activities (fire brigade leaders only); and
- Detailed review of firefighting strategies and procedures.

Field exercises are conducted to reinforce the classroom training and provide an opportunity to practice the skills learned. These exercises include:

- Fighting small fires with portable fire extinguishers;
- Fighting interior fires using breathing apparatus;
- Controlling incidents involving flammable gases or pressurized liquid fuels;

- Fighting large flammable liquid fires using hose lines or foam; and
- Fighting flammable liquid fires inside building.

The classroom instruction and field exercises are provided by qualified individuals who are knowledgeable, experienced, and suitably trained in fighting the types of fires that could occur and in using the types of equipment available at the power station.

To qualify as a member of the Fire Brigade, an individual must meet the following criteria:

- Is available to answer fire alarms; and
- Has passed an annual physical exam which includes an annual physical examination to determine their ability to perform strenuous firefighting activities.

9.5.1.15.4.3 Fire Protection Staff Training

The Fire Protection Engineer responsible for the formulation and implementation of the Fire Protection Program meets the qualification requirements provided in RG 1.189, Regulatory Position 1.61a (reference Table 9.5-1).

The station fire protection staff receives training in:

- Design and maintenance of fire detection, suppression, and extinguishing systems;
- Fire prevention techniques and procedures;
- Firefighting techniques and procedures for plant personnel and the fire brigades; and
- Hazardous material identification and handling. Specific courses to achieve the above training objectives are provided for the System Engineers assigned to the fire protection staff if they are not fully trained when hired. Other training organizations may be used to provide this training on a case-by-case basis.

9.5.1.15.4.4 Offsite Fire Department Training

Training for offsite fire departments that have agreed to assist during a major onsite fire is provided to make members aware of the need for radiological protection of personnel, the special hazards and operational precautions associated with fire fighting at a nuclear power plant. The course is provided annually and includes instruction in the following:

- Basic radiation protection, including the use of personal dosimetry devices;
- Plant familiarization, including hazards, available fire fighting equipment, and fire protection systems;
- Firefighting procedures; and
- Security procedures, including entry to and exit from the plant.

9.5.1.15.4.5 Fire Brigade Retraining

Classroom

Regular planned meetings are held at least once each calendar quarter for brigade members to review changes in the fire protection program and other subjects as necessary. Periodic refresher

training sessions are held to repeat the classroom instruction program for brigade members over any 2-year period. These sessions may be concurrent with the regular planned meetings.

Practice

Practice sessions are held for each shift fire brigade on the proper method of fighting the various types of fires that could occur in a nuclear power plant. These sessions provide brigade members with experience in actual fire extinguishment and the use of emergency breathing apparatus under strenuous conditions encountered in firefighting. These practice sessions are provided at least once per year for each fire brigade member.

Drills

Fire brigade drills are conducted in various plant areas, especially in those areas identified by the fire hazards analysis to be critical to plant operation and to contain significant fire hazards. Fire brigade drills are performed in the plant so that the fire brigade can practice as a team. Unannounced drills are in full dress. Regularly scheduled drills are also in full dress. Full dress includes helmet, coat, boots, gloves, and emergency breathing apparatus. Donning of face mask and use of emergency air is not mandatory during drills.

Drills are performed at least once each calendar quarter for each shift fire brigade. The offsite local fire department is invited to participate in at least one drill per year. Each fire brigade participates in at least two drills per year. Critiques are conducted upon completion of each drill to evaluate the effectiveness of brigade performance and incorporate lessons learned into future drill evolutions. Drills include reviews of the latest plant modifications and corresponding changes in firefighting plans.

9.5.1.15.4.6 Fire Brigade Records

Individual records of training provided to each fire brigade member, including drill critiques, are maintained as part of the permanent plant files for at least 3 years to ensure that each member receives training in all parts of the training program. Retraining or broadened training for fire-fighting within buildings is scheduled for all those brigade members whose performance records show deficiencies. A system to document drills including critiques and corrective actions has been developed. Fire brigade training review and individual performance programs also have been developed.

9.5.1.15.4.7 Fire Brigade Equipment

The minimum equipment provided for the ESBWR Plant Fire Brigade consists of personal protective equipment such as turnout coats, protective hoods, boots, gloves, hard hats, emergency communications equipment, portable lights, portable ventilation equipment and portable extinguishers. Self-contained breathing apparatus (SCBA) approved by the National Institute for Occupational Safety and Health, using full face positive pressure masks, are provided for selected fire brigade, emergency repair and control room personnel. At least ten masks are be provided for fire brigade personnel. At least two extra air bottles are located onsite for each SCBA. An additional onsite 6-hour supply of reserve air is provided to permit quick and complete replenishment of exhausted supply air bottles. During refueling and maintenance periods, additional SCBAs are provided near containment entrances for the exclusive use of the Fire Brigade. The Fire Brigade Leader has ready access to keys for any locked fire doors.

9.5.1.15.5 Administrative Controls

Administrative controls for the Fire Protection Program are implemented through plant administrative procedures. These procedures are available for review and inspection prior to implementation of the program.

These controls establish procedures to:

- Control actions to be taken by an individual discovering a fire, such as notification to the Control Room, attempting to extinguish the fire, and actuation of local fire suppression systems;
- Control actions to be taken by the Control Room operator, such as sounding fire alarms, and notifying the Shift Supervisor of the type, size and location of the fire;
- Control actions to be taken by the Fire Brigade after notification of a fire, including location to assemble, directions given by the fire brigade leader, the responsibilities of brigade members such as selection of fire fighting and protective equipment and use of preplanned strategies for fighting fires in specific areas;
- Control actions to be taken by the Security force upon notification of a fire; and
- Define the strategies established for fighting fires in safety-related areas and areas presenting a hazard to safety-related equipment, including the designation of the;
  - Fire hazards in each plant zone covered by a fire fighting procedure;
  - Fire extinguishers best suited for controlling fires with the combustible loadings of the zone and the nearest location of these extinguishers;
  - Most favorable direction from which to attack a fire in each area in view of the ventilation direction, access hallways, stairs, and doors that are most likely to be free of fire, and the best station of elevation for fighting the fire. All access and egress routes that involve locked doors are specifically identified in the procedure with the appropriate precautions and methods for access specified;
  - Plant systems that should be managed to reduce the damage potential during a local fire and the location of local and remote controls for such management (e.g., any hydraulic or electrical system in the zone covered by the specific fire fighting procedure that could increase the hazards in the area because of overpressurization or electrical hazards);
  - Vital heat-sensitive system components that need to be kept cool while fighting a local fire. Particularly hazardous combustibles that need cooling are designated;
  - Potential radiological and toxic hazards in fire zones;
  - Ventilation system operation that ensures desired plant air distribution when the ventilation flow is modified for fire containment or smoke clearing operations;
  - Operations requiring Control Room and Operating Supervisor coordination or authorization;
  - Instructions for plant operators and general plant personnel during a fire; and

- Organize the Fire Brigade and assign special duties according to job title so that all fire fighting functions are covered by any complete shift personnel complement. These duties include command and control of the brigade, transporting fire suppression and support equipment to the fire scenes, applying the extinguishing agent to the fire, communication with the Control Room, and coordination with outside fire departments.

9.5.1.15.6 Control of Combustible Materials, Hazardous Materials and Ignition Sources

The control of combustible materials is defined by administrative procedures. These procedures impose the following controls:

- Prohibit the storage of combustible materials (including unused ion exchange resins) in areas that contain or expose safety-related equipment or establish designated storage areas with appropriate fire protection;
- Govern the handling of and limit transient fire loads such as flammable liquids, wood and plastic materials;
- Assign responsibility to the appropriate supervisor for reviewing work activities to identify transient fire loads;
- Govern the use of ignition sources by use of a flame permit system to control welding, flame cutting, grinding, brazing and soldering operations, and temporary electrical power cables. A separate permit is issued for each area where such work is done. If work continues over more than one shift, the permit is valid for not more than 24 hours when the plant is operating or for the duration of a particular job during plant shutdown per NFPA 51B and 241;
- Minimize waste, debris, scrap, and oil spills or other combustibles resulting from a work activity while work is in progress and remove the same upon completion of the activity or at the end of each work shift;
- Govern periodic inspections for accumulation of combustibles and to ensure continued compliance with these administrative controls;
- Prohibit the storage of acetylene-oxygen and other compressed gasses in areas that contain or expose safety-related equipment or the fire protection system that serves those areas. A permit system is required to use this equipment;
- Govern the use and storage of hazardous chemicals;
- Control the use of specific combustibles. Wood smaller than 152 mm x 152 mm (6 in. x 6 in.) used during maintenance, modification, or refueling operation (such as lay-down blocks or scaffolding) is treated with a flame retardant as described in RG 1.189 Position 2.1.1.c. Equipment or supplies (such as new fuel) shipped in untreated combustible packing containers may be unpacked in the power block if required for valid operating reasons. However, all combustible materials are removed from the area immediately following unpacking. Such transient combustible material, unless stored in approved containers, is not left unattended during lunch breaks, shift changes, or other similar periods. Loose combustible packing material such as wood or paper excelsior, or polyethylene sheeting is placed in metal containers with tight-fitting self-closing metal

covers. Only noncombustible panels or flame-retardant tarpaulins or approved materials of equivalent fire-retardant characteristics are used. Any other fabrics or plastic films used are certified to conform to the large-scale fire test described in NFPA 701; and

- Govern the control of electrical appliances in areas that contain or expose safety-related equipment.

9.5.1.15.7 Control of Radioactive Materials

As stated in the Fire Hazards Analysis, (FHA), the primary objectives of a fire protection program are to minimize both the probability of occurrence and the consequences of a fire. To meet these objectives, the fire protection program provides reasonable assurance, through defense-in-depth, which a fire does not prevent the performance of necessary safe shutdown functions and that radioactive releases to the environment in the event of a fire is minimized. Table 9A.5-1 specifically addresses the radiological release potential for each defined fire area.

9.5.1.15.8 Testing and Inspection

The Fire Protection System is initially tested in accordance with Section 14.2.

Testing and inspection requirements are implemented through administrative procedures. Post maintenance or modifications testing to the Fire Protection System is subject to review to ensure conformance to design requirements. Installation of portions of the system where performance cannot be verified through post modification tests, such as penetration seals, fire retardant coatings, cable routing, and fire barriers is inspected. Inspections are performed by individuals knowledgeable of fire protection design and installation requirements. Open flame or combustion generated smoke are not to be used for leak testing or similar procedures such as air flow determination. Inspection and testing procedures address the identification of items to be tested or inspected, responsible organizations for the activity, acceptance criteria, documentation requirements and signoff requirements.

The Fire Protection System, including fire detection system, auto suppression system, and manual suppression equipment, is periodically inspected. In addition, systems which support fire fighting, such as emergency breathing and auxiliary equipment, emergency lighting and communication equipment, are periodically inspected.

Fire Protection materials subject to degradation, such as fire stops, seals, and fire retardant coatings are visually inspected periodically to assure they are not degraded or damaged. Fire hoses are hydrostatically tested in accordance with NFPA-1962. Hoses stored in outside hose stations are tested annually and interior standpipe hoses are tested every three years.

The Fire Protection System is periodically tested in accordance with plant procedures. Fire protection equipment, emergency lighting, and communication equipment are tested periodically to ensure that the equipment functions properly and continues to meet the design criteria. Testing includes periodic operational tests and visual verification of damper and valve positions. Fire doors and their closing and latching mechanisms are also included in these procedures. Fire doors separating areas containing safety-related equipment are self-closing or provided with closing mechanisms and are inspected semiannually to verify that the automatic hold open, release and closing mechanisms and latches are operable. Watertight and missile resistant doors are not provided with closing mechanisms. Fire doors with automatic hold open and release mechanisms are inspected daily to verify that the doorways are free of obstructions.

Fire doors separating fire areas are normally closed and latched. Fire doors that are locked closed are inspected weekly to verify position. Fire doors that are closed and latched are inspected daily to assure that they are in the closed position. However, fire doors that are closed and electrically supervised at a continuously manned location are not inspected.

9.5.1.15.9 Quality Assurance

Quality assurance controls are applied to the activities involved in the design, procurement, installation, and testing and the administrative controls of fire protection systems for safety-related areas, in accordance with the programs outlined in Chapter 17. The COL applicant shall provide details of the QA program for the fire protection program (COL 9.5.1-11-A).

9.5.1.15.10 Emergency Planning

Emergency planning is described in Section 13.3.

9.5.1.16 COL Information

The following site-specific items shall be determined by the COL applicant/holder:

9.5.1-1-A Secondary Firewater Storage Source

The COL Applicant will provide the capacity of the secondary firewater source (Subsection 9.5.1.4).

9.5.1-2-A Secondary Firewater Capacity

The COL Applicant shall provide documentation that the secondary fire protection pump circuit design will supply a minimum of 484 m^3/hr (2130 gpm) with sufficient discharge pressure to develop a minimum of 738 kPaG (107 psig) line pressure at the Turbine Building / yard interface boundary (Subsection 9.5.1.4).

9.5.1-3-A Yard Main Loop (Deleted)

9.5.1-4-A Piping and Instrument Diagrams

The COL Applicant shall provide simplified FPS piping and instrumentation diagrams showing complete site-specific systems (Subsection 9.5.1.5).

9.5.1-5-A Fire Barriers

The COL Applicant shall provide specific design and certification testing details for fire barriers and electrical raceway fire barrier systems in accordance with applicable section of NFPA 251, ASTM E-119 and guidance in RG 1.189 (Subsection 9.5.1.10).

9.5.1-6-A Smoke Control

The COL Applicant will include in its operating procedure development program:

- Procedures for manual smoke control by manual actions of the fire brigade for all plant areas in accordance with NFPA 804 guidelines; and
- Milestone for completing this category of operating procedures (Subsection 9.5.1.11).

9.5.1-7-A FHA Compliance Review

The COL Applicant will provide a milestone for confirming the assumptions and requirements of the FHA against the as-built conditions and updating the FHA as necessary. (Subsection 9.5.1.12)

9.5.1-8-A Fire Protection Program Description

The COL Applicant shall provide a milestone for implementation of the applicant's fire protection program (Subsection 9.5.1.15).

9.5.1-9-A Fire Protection License Changes (Deleted)

9.5.1-10-A Fire Brigade

The COL Applicant will provide a milestone for implementing the provisions for manual fire-fighting capability for all plant areas (Subsection 9.5.1.15.4).

9.5.1-11-A Quality Assurance

The COL Applicant shall provide details of the QA program for the fire protection program (Subsection 9.5.1.15.9).

9.5.1.17 References

All applicable references are listed in Table 9.5-1.

9.5.2 Communications System

The communication system provides the means to conveniently and effectively communicate between various plant locations and with offsite locations during normal, maintenance, transient, fire, and accident conditions under maximum potential noise levels. The communication system allows guards and watchmen on duty to maintain continuous communication with personnel in manned alarm station, and offsite/onsite agencies as required by 10 CFR 73, Sections 55(e) and (f) (Reference 9.5.2-3). This is accomplished by either private automatic branch (telephone) exchange (PABX) or wireless communication system. Communication equipment used with respiratory protection gear is designed and selected in accordance with EPRI NP-6559 (Reference 9.5.2-2). The communication system consists of the following systems:

- Plant page/party-line (PA/PL) system;
- Private automatic branch (telephone) exchange (PABX) system;
- Plant sound-powered telephone system;
- Plant radio system;
- Evacuation alarm and remote warning system;
- Emergency communication system; and
- Completely independent radio system for security purposes as described in Section 13.6.

9.5.2.1 Design Bases

Safety Design Bases

The communication system serves no safety-related function and thus has no safety design basis.

Power Generation Design Bases

The communication system power generation design bases are as follows:

- Communication subsystems are independent of one another, therefore, a failure in one subsystem does not degrade the performance of the other subsystems;
- The communication system is in accordance with applicable codes and standards and the equipment is shielded as necessary, from the adverse effects of electromagnetic interference (EMI) and radio frequency interference (RFI); and
- The communication subsystems are functional during a loss of offsite power.

9.5.2.2 System Description

Summary

The PA/PL, PABX, and plant radio systems are physically independent systems powered from diverse nonsafety-related power supplies backed up by the standby onsite AC power supply system. They serve as backup to one another in the event of system failures. These three independent voice communication systems are designed and installed to provide assurance that any single event does not cause a complete loss of intraplant communication. This is accomplished by the use of diverse technology, separate routing of cables, and separate standby diesel-generator-backed power supplies.

Attention is given to the supports and anchoring of emergency communication system components and components of the other communication systems located in normally occupied areas or in areas containing safety-related equipment so as to enhance the earthquake survivability of these components and ensure that they do not present a personnel or equipment hazard when subjected to seismic loading.

Descriptions of these systems are given in the following sections.

Plant Page/Party Line (PA/PL) System

This system provides communication means such as ringing, mutual telephonic communication, and simultaneous broadcasting in various select buildings and areas including outdoor locations of the plant. The system permits merging with and separation from other units of the plant. The system is primarily used for intraplant communications. It is a hard-wired communication system used during plant operations, testing, calibration, startup, and limited emergencies.

The PA/PL system is a nonsafety-related system and mounting of system components is in accordance with standard design engineering practices. The PA/PL system components are mounted to Seismic Category II requirements in areas containing safety-related equipment.

The PA/PL system consist of handsets, speakers, branch boxes, main distribution boards, a control board, amplifiers, amplifier boards, battery, battery chargers, DC distribution board, cable wiring materials, junction boxes and jacks. The system is a multiple-channel, multiple-system-split-type design with a separate set of amplifiers and a distribution board for each branch. This permits simultaneous use of a page line and four party lines for in-plant use.

Handsets and speakers are installed in places which are important for plant operation and necessary for personnel safety, and where communication is frequent, including the areas below:

- Main control room;
- Electrical equipment rooms;
- Refueling area;
- Turbine operating area;
- Periphery of control rod hydraulic units areas;
- Feedwater pump rooms;
- Elevators;
- Exterior of plant buildings;
- Technical support center;
- Electrical Building; and
- Cooling tower area.

Each handset station can be used to communicate with any other handset station or the central station.

One circuit of the handset station is connected to a telephone line, thereby permitting simultaneous broadcasting from a security telephone unit. In addition to the basic function, the equipment can be used for an automatic surveillance of main amplifier output alarm indication in the event of failure of main equipment and manual switching to spare amplifier as necessary.

The system is operated from a battery source with a normal and a spare battery charger. The chargers are powered from a nonsafety-related power supply backed from the standby onsite AC power supply system. The PA/PL equipment is backed by an exclusive DC power supply with a dedicated battery. The battery has capacity for 10 hours of operation following the loss of AC power. The charger is sized to recharge the battery from a fully discharged condition within 10 hours while supplying the normal DC loads.

The handsets are located at the same relative position on each floor, at a conspicuous location in personnel routes, at uniform intervals in corridors and large rooms, close to panels where possible, and in low level radiation areas.

Paging equipment for outdoor facilities is designed to automatically limit the sound volume at night to a level manually set from the MCR.

Speakers and handsets are installed at the farthest practical distance from noise sources. However, in rooms where the noise level increases during equipment operation (e.g., the feedwater pump room, diesel generator room, etc.), handsets are enclosed within a soundproof booth.

Box-type speakers are installed in small rooms where reverberations make hearing difficult. The speakers are of two different types as described below:

- Horn shaped (trumpet shaped); and

- Cone shaped (box-type).

The circuits from the main paging equipment to each junction box are wired in a ring topology to preclude loss of system function in the event of a single cable failure.

Private Automatic Branch (Telephone) Exchange (PABX)

The PABX is a multinode system with telephones located throughout the plant. The nodes of the PABX are located in separate communication rooms.

The PABX is connected to the commercial telephone system and the utility private network that allows offsite communications for normal and emergency conditions.

The PABX is powered from the plant nonsafety-related buses and consists of independent chargers and batteries for each node with the capability of operating the entire plant telephone system for approximately 8 hours after a loss of the normal AC supply.

Plant Sound-Powered Telephone System

A separate telephone communication system using portable sound-powered telephone units, independent of the PA/PL and PABX systems, is provided for normal and abnormal/accident conditions. This sound-powered system allows uninterrupted private communication between the MCR and the control rod drive equipment area; refueling platform area; turbine-generator operating deck; areas containing switchgear, load centers, and motor control centers; and other high-maintenance activity areas.

The communication facilities for use during plant maintenance consist of local terminal jacks and boxes and a system main communication board with storage for patch cords. Terminal jacks are attached to the central control boards and to local panels and racks where communication links are frequently required.

The system provides communication capability between boards in the MCR, between the MCR and field stations, or between field stations during testing and periodic inspection of the plant. The communication between field stations is by means of portable telephone units and patch cords at the system main communication board. The sound-powered telephone system does not require external power supply for operation.

Plant Radio System

Normal and emergency communications within the plant can be maintained independent of the PA/PL and PABX systems through the plant radio system. This system consists of antennas distributed throughout the plant with a centralized rebroadcast transmitter. Lower power portable radios are used with this system to ensure that there is no EMI with control and instrument circuits. The system is designed to permit radio to radio and radio to console communications within the plant and satellite buildings. The system complies with the performance requirements applicable to portable radio communication systems as described in RG 1.189, Position 4.1.7.

Communication consoles are located at selected plant locations including the MCR and remote shutdown rooms. Communications between consoles is through hardwire, therefore providing a means of communication between selected areas of the plant even with the failure of the radio base station, PA/PL system, and PABX. The power for the base station and consoles is from the security system power supply that is backed by batteries and a standby generator.

Portable, hand-held radios provide two-way voice communications between the various units for personnel who need mobility. The radios are equipped with multiple channels as follows:

- Emergency;
- Fire brigade (Optional);
- Operations;
- Maintenance;
- Management;
- Health physics; and
- Crisis management (or Unassigned).

The radios are equipped with tone-coded squelch so that a message cannot be received unless the message contains the proper address code. Therefore, individual, all-channel (zone), and all-system calls can be made. The emergency channel is not coded. Calls are made between the telephone system and the in-plant radio system by dialing through the PABX to a radiotelephone interconnect panel.

Any portable radio systems operate at frequencies that ensure that they do not interfere with DCIS functions.

Evacuation Alarm and Remote Warning System

The evacuation alarm and remote warning system is provided to warn personnel of emergency conditions. This system supplements the Area Radiation Monitoring System described in Subsection 12.3.4.

The evacuation alarm system consists of a siren tone generator, public address system speakers, and an outdoor siren. A selector switch in the MCR is used to manually initiate the evacuation alarm. This selector switch also selects the evacuation alarm coverage in the drywell or the entire plant including the initiation of the outdoor siren and the remote broadcast speakers.

The remote warning system consists of a message storage device, microphone, remote broadcast speakers, and an output/feedback monitoring system. The message storage device transmits recorded messages and the microphone transmits warning instructions through the remote broadcast speakers. An initiation signal from the MCR starts the message storage device or opens the microphone available for transmission.

The output/feedback monitoring system monitors the output of the remote broadcast speakers and retransmits the output back to the monitoring speaker when the message storage device is initiated or to the sound level meter when the microphone is activated. The monitoring speaker and sound level meter are located in the MCR.

Power for this system is supplied from a nonsafety-related bus backed from a standby onsite AC power supply system and backed by the station batteries.

Emergency Communication Systems

Normal and emergency offsite communications are provided by public telephone lines, the private utility network connected to the PABX and radio systems.

Emergency telephones are color-coded to distinguish them from normal telephones and include, but are not limited to, the following:

- Emergency Notification System (ENS) - Provides a communications link with the Nuclear Regulatory Commission (NRC) in accordance with Inspection & Enforcement (IE) Bulletin 80-15. (COL 9.5.2.5-1-A);
- Health Physics Network - Provides a communications link with the NRC health physics personnel (COL 9.5.2.5-3-A);
- Ringdown Phone System - Provides a communications link with local and state agencies (COL 9.5.2.5-4-A);
- Crisis Management Radio System – Provides communication capability in accordance with the intent of NUREG-0654 (COL 9.5.2.5-3-A);
- Fire Brigade Radio System - The COL Applicant will describe the Fire Brigade Radio System in accordance with RG 1.189, Position 4.1.7 (COL 9.5.2.5-5-A); and
- Transmission System Operator Communication Link (COL 9.5.2.5-2-A).

9.5.2.3 Safety Evaluation

The communication system is not safety-related and is classified as nonsafety-related. The failure of any communications system does not adversely affect safe shutdown capability. It is not necessary for plant personnel in safety-related areas of the plant to communicate with the MCR in order to achieve safe shutdown of the plant.

Diverse nonsafety-related power supplies connected to the plant standby generators power the PA/PL telephone, PABX and plant radio systems. Failure of any or all of its components does not affect any safety-related equipment.

9.5.2.4 Inspection and Testing Requirements

The communications system is preoperational tested. The systems described above are conventional and have a history of successful operation at similar plants. These systems are used and maintained routinely to ensure their availability.

The power sources for the PA/PL telephone system and the PABX are tested separately during the preoperational and startup test program. Measurements or tests required to identify long-term deterioration are performed on a periodic basis.

9.5.2.5 COL Information

9.5.2.5-1-A Emergency Notification System

The COL applicant will describe the Emergency Notification System provisions required by 10 CFR 50.47(b)(6) and will address recommendations described in IE-Bulletin-80-15. (Subsection 9.5.2.2)

9.5.2.5-2-A Grid Transmission Operator

The COL applicant will describe the voice communication link availability with the grid transmission system operator. (Subsection 9.5.2.2)

9.5.2.5-3-A Offsite Interfaces (1)

The COL applicant will describe the means of communication between the control room, TSC, EOF, State and local emergency operation centers and radiological field personnel in accordance with NUREG – 0696 and NUREG – 0654. (Subsection 9.5.2.2)

9.5.2.5-4-A Offsite Interfaces (2)

The COL applicant will describe the communication methods from the control room, TSC, and EOF to NRC headquarters including establishment of Emergency Response Data Systems (ERDS) in accordance with NUREG – 0696. (Subsection 9.5.2.2)

9.5.2.5-5-A Fire Brigade Radio System

The COL applicant will describe the Fire Brigade Radio System in accordance with RG 1.189, Position 4.1.7 (Subsection 9.5.2.2).

9.5.2.6 References

9.5.2-1 (Deleted)

9.5.2-2 EPRI Report NP 6559, "Voice Communication System Compatible with Respiratory Protection".

9.5.2-3 10 CFR 73 Section 55(e) and (f), "Physical Protection of Plants and Material".

9.5.2-4 10 CFR 50, Appendix E, IV.E.9, Emergency Facilities and Equipment".

9.5.2-5 NRC Information Notice 86-097, "Emergency Communication Systems".

9.5.2-6 NRC Information Notice 87-058, "Continuous Communication Following Emergency Notifications".

9.5.2-7 NRC IE Circular No.80-09, "Problems with Plant Internal Communication Systems".

9.5.2-8 NUREG-0654, "Criteria for Preparation and Evaluation of Radiological Emergency Response Plans & Preparedness; Support of Nuclear Power Plants".

9.5.2-9 IE Bulletin 80-15, "Possible Loss of Emergency Notification System (ENS) with Loss of Offsite Power." June 18, 1980.

9.5.2-10 NRC Generic Letter 89-15, "Emergency Response Data System".

9.5.2-11 NUREG 0696, Functional Criteria for Emergency Response Facilities".

9.5.3 Lighting System

This section covers all onsite systems that provide artificial illumination for rooms, spaces, and outdoor areas of the plant. These systems include normal, standby, emergency and security lighting subsystems. Security lighting system is described in separate security documents. Refer to Subsection 13.6.1.1.6

9.5.3.1 Safety Design Bases

The safety design bases for the lighting system are as follows:

- The electrical power for the MCR and Remote Shutdown Area emergency lighting is provided by safety-related power supplies;
- The emergency lighting system components and installation inside and outside the MCR remain functional during design basis events and withstand the seismic loads of a design basis earthquake;
- The system is integrated with the standby lighting system and designed so that alternate emergency lighting fixtures are supplied from separate safety divisions;
- The system maintains the lighting levels for at least 72 hours following a design basis event including the loss of all AC power sources; and
- The normal and standby lighting systems are nonsafety-related and have no safety design bases.

9.5.3.2 Power Generation Design Bases

- The lighting system design provides the illumination required for the performance of activities in the various areas and is equal to or greater than those recommended by the Illuminating Engineering Society of North America;
- The lighting circuits of the normal, standby, and emergency lighting subsystems are routed in separate conduits;
- The design of the lighting system for areas containing rotating equipment includes special provisions to eliminate the risk of stroboscopic effects caused by flicker;
- The circuits to the individual lighting fixtures (other than the DC self-contained battery-operated lighting units) are staggered to the extent possible and the staggered circuits are supplied from separate power supplies to ensure that some lighting is retained in each room even in the event of a circuit failure;
- Mercury vapor lamps and mercury switches are not used in fuel handling areas; and
- Either incandescent lamps or light-emitting diode illuminating devices are used within the primary containment, the main steam tunnel, and the refueling level of the RB.

9.5.3.3 System Description

The plant lighting systems furnish the illumination required for safe performance of plant operation, security, shutdown, and maintenance activities. Emergency lighting is provided in areas where emergency operations are performed and for the safety of personnel during a power failure. Table 9.5-3 summarizes the lighting system illumination ranges for normal and emergency illumination (Ref: 9.5.3-1).

The plant lighting systems are composed of the following:

- Normal lighting system;
- Standby lighting system; and
- Emergency lighting system.

The lighting systems are designed in accordance with applicable industry standards for lighting fixtures, cables, grounding, penetrations, conduits, and controls.

Lighting fixtures located in the vicinity of safety-related equipment are supported so that they do not adversely impact the equipment when subjected to seismic loading of a safe shutdown earthquake.

9.5.3.3.1 Normal Lighting

The normal lighting system, as supplemented by the standby lighting system, is used to provide normal illumination under normal plant operating, maintenance, and testing conditions.

Power for the normal lighting system is supplied from the nonsafety-related PG buses that are described in Subsection 8.3.1. This system provides lighting for all indoor and outdoor areas.

The normal illumination level in any area is comprised of light from all lighting fixtures except the emergency DC self-contained battery-operated lighting units.

Table 9.5-3 illustrates the typical ranges of illumination that are achieved, based on current recommendations.

The high-intensity discharge (HID) and fluorescent lighting fixtures in this subsystem are powered from 480/277 volts alternating current (VAC); 3-phase, 4-wire, grounded neutral system distribution panels supplied from the normal 480 VAC motor control centers. The incandescent lighting fixtures on refueling platforms are powered from the 480/277 VAC, 3-phase, 4-wire, grounded neutral system distribution panels. Other incandescent lighting fixtures are powered from dry-type transformers rated at 480-208/120 VAC, 3-phase, 4-wire, grounded, or 480-240/120 VAC, single-phase, 3-wire, grounded.

9.5.3.3.2 Standby Lighting

The standby lighting system, in addition to supplementing the normal lighting system, supplements the emergency lighting system in selected areas of the plant where emergency operations are performed, including the access and egress routes to and from those areas.

The standby lighting system is designed to provide a minimum level of illumination to selected areas of the plant to aid in emergencies, safe shutdown, or in restoring the plant to normal operation. This system consists of fluorescent lighting fixtures powered from 480/277 VAC, 3-phase, 4-wire, grounded neutral system lighting distribution panels normally supplied by the PIP nonsafety-related buses. The primary areas served by this system are as follows:

- Main Control Room;
- Remote shutdown rooms;
- Operational support center;
- Technical support center;
- Auxiliary switchgear rooms;
- Safety-Related DC equipment rooms;
- Stairwells and aisle way;

- DCIS equipment rooms;
- Diesel generator room; and
- Diesel generator control room.

The standby lighting distribution panels also serve as the preferred power supply to the eight-hour emergency lighting units and the stair lighting units.

The standby lighting system is connected to the PIP nonsafety-related buses of the plant auxiliary AC power distribution system as described in Subsection 8.3.1.1.2. The standby lighting system is energized as long as power from an offsite source or a standby onsite AC power supply system is available.

The standby lighting system is limited to those areas of the plant where power can be supplied from the standby onsite AC power supply system, insofar as practical, and could be involved in emergencies, shutdown or recovery operations.

The standby lighting system and the normal lighting system provide normal illumination. Standby lighting is maintained as long as power is available from the PIP nonsafety-related buses.

9.5.3.3.3 Emergency Lighting

The emergency lighting system is used to provide acceptable levels of illumination throughout the station and, particularly, in areas where emergency operations are performed, such as control rooms, remote shutdown area, battery rooms, containment, upon loss of the normal lighting system. The emergency lighting is integrated with the standby lighting in the MCR and consists of similar lighting fixtures.

The emergency lighting system is comprised of the following:

- Main control room and remote shutdown area emergency lighting; and
- Nonsafety-related DC self-contained battery-operated lighting units for exit lights, emergency lighting units, and stair lighting units.

The circuits to emergency lighting fixtures are continuously energized and are not switched.

The emergency lighting system components and installation inside and outside the MCR remain functional during design basis events and in particular withstand the seismic loads of a design basis earthquake.

9.5.3.3.3.1 Main Control Room and Remote Shutdown Area Emergency Lighting

The MCR and remote shutdown area emergency lighting power is supplied from the safety-related Uninterruptible AC power supply system (UPS) as shown in DCD Chapter 8, Figure 8.1-4, Sheet 1 of 1. Electrical isolation of nonsafety-related emergency lighting circuits from safety-related Uninterruptible AC power supply is accomplished by the use of series isolation devices that are designed to coordinate with upstream 120 VAC distribution panel circuit breakers. Raceways carrying cables to the lighting fixtures as well as the lighting fixtures for both standby and emergency lighting inside the MCR utilize Seismic Category I support. Both the standby and emergency lighting fixtures are nonsafety-related. Cables used for emergency

lighting in the MCR and the remote shutdown area are nonsafety-related. The MCR emergency lighting complies with the human factor requirements by utilizing semi-indirect, low-glare lighting fixtures.

9.5.3.3.3.2 DC Self-Contained Battery-Operated Lighting Units

In areas outside the MCR, emergency light is provided by eight-hour, self-contained, battery pack, sealed beam lighting units. These units are powered from the nonsafety-related power source and provide illumination for safe ingress and egress of personnel following a loss of normal lighting in the following areas:

- Areas required for power restoration / recovery to comply with the requirements of Reg. Guide 1.189;
- Areas where normal actions are required for operation of equipment needed during fire; and
- Stairwells serving as escape or access routes for fire fighting and the remote shutdown area.

The DC self-contained battery-operated emergency and stair lighting units are powered from the same circuit that powers the normal or standby lighting fixture whose loss of power then causes the operation of the particular emergency or stair lighting unit.

In addition to the lighting supplied for specific emergency use as described above, all exits are supplied with battery-powered self-contained emergency exit light units. Each unit consists of a 90-minute battery, a battery charger and exit sign and is normally energized by 277 VAC or 120 VAC from the normal lighting system power supply.

Emergency lighting units provide emergency lighting instantaneously and automatically upon the failure or interruption of the normal or standby lighting power supply, as applicable. Each emergency lighting unit consists of a battery, a charger, and control and monitoring circuits enclosed in a self-contained unit. Each emergency lighting unit is capable of supplying sealed beam lamps locally mounted on the battery pack unit, remotely mounted near the battery pack unit, or a combination thereof for eight hours without the charger.

The emergency lighting units are provided with a time delay following restoration of AC power, such that the emergency lighting only turns off after adequate time for the normal or standby lighting to restart. The units are normally energized from the same circuit whose loss of light requires the operation of the unit.

9.5.3.3.3.3 Panel Lighting

Panel lighting is designed to provide lighting for interior maintenance of the panels as described below.

- Panel lighting consists of lighting fixtures located inside the Wide Display Panel in the MCR. The fixtures are powered from nonsafety-related power source and are normally off.
- Raceways carrying cables up to the lighting fixtures as well as the lighting fixtures are supported by Seismic Category I support.

9.5.3.4 Safety Evaluation

The plant lighting system is nonsafety-related. The electrical power for the MCR lighting will be supplied from safety-related UPS. Components of the lighting systems associated with safety-related systems are supported to Seismic Category I requirements.

During normal plant operation, lighting systems are energized from onsite buses and offsite feeders. MCR emergency lighting permits the operators to safely operate and maintain the plant and to safely shutdown the plant and maintain it in a safe shutdown condition. The lighting system provides lighting at all times in areas used during reactor shutdown or emergency.

In the event of a loss of AC power from both load groups of the PG buses, the normal lighting system is inoperable. The standby lighting system is temporarily inoperable until the standby generators reenergize the permanent nonsafety-related buses. The emergency lighting system remains operable and is energized from the permanent nonsafety-related buses and the batteries of the self-contained lighting units.

In the event of a loss of AC power from both load groups of the unit auxiliary buses, the standby generators are signaled to start and energize their respective PIP nonsafety-related buses within two minutes. During the two-minute delay (standby generator startup time), the emergency lighting system in the MCR remains energized from the station safety-related 250 VDC battery, and the self-contained battery-operated lighting units immediately turn on. After the standby generators have started and reenergized their respective PIP nonsafety-related buses, the standby lighting system is available. The DC self-contained battery-operated lighting units connected to the standby lighting power supply automatically turn off.

9.5.3.5 Tests and Inspections

The lighting systems are preoperational tested. System operability is demonstrated by normal use during plant operation.

The AC lighting systems are normally energized and maintained continuously and require only routine testing. The emergency lighting system is tested to ensure the operability of the DC self-contained battery-operated lighting units and other major components of the system.

9.5.3.6 COL Information

None

9.5.3.7 References

9.5.3-1 Illuminating Engineering Society of North America (IESNA), IESNA Lighting Handbook (see Table 1.9-22).

9.5.4 Diesel Generator Fuel Oil Storage and Transfer System

9.5.4.1 Design Bases

Safety Design Bases

<u>Standby Diesel Generators</u>

The SDG fuel oil storage and transfer system is not safety-related and has no safety-related design basis.

The SDG fuel oil storage and transfer system has RTNSS functions, as a supporting system to provide power. These functions are described in Appendix 19A, which provides the level of oversight and additional requirements to meet the RTNSS functions. Performance of RTNSS functions is assured by incorporating the defense-in-depth principles of redundancy and physical separation at the system (SDG) level to ensure adequate reliability and availability.

Each of the two SDGs is equipped with its own dedicated fuel oil storage and transfer system. The subsystems, including fuel oil storage and supply, associated with each SDG are independent and separated from the subsystems associated with other SDG engine. Thus, the subsystems are not required to be designed with redundancy nor defense-in-depth principles applied.

Ancillary Diesel Generators

The ADG fuel oil storage and transfer system is not safety-related and has no safety-related design basis.

The ADG fuel oil storage and transfer system has RTNSS functions, as a supporting system to provide power. These functions are described in Appendix 19A, which provides the level of oversight and additional requirements to meet the RTNSS functions. Performance of RTNSS functions is assured by applying the augmented design standards described in Subsection 19A.8.3.

Each of the two ADGs is provided as a complete skid-mounted package. A separate, dedicated, fuel oil storage and transfer system is provided for each ADG. Thus, the ADG fuel oil storage and transfer system is not required to be designed with redundancy nor defense-in-depth principles applied.

Power Generation Design Bases

Standby Diesel Generators

Each SDG is supplied by a separate fuel oil system. The diesel generator systems are standby power supply systems. The fuel oil storage and transfer systems for the SDGs design bases are as follows:

- Provide day tank of sufficient capacity to supply fuel oil to the SDG for a minimum of 8 hours of operation at full load;
- Provide a long-term fuel oil storage capacity (fuel oil storage tank) sufficient to support continuous SDG operation for a minimum of seven days without refueling. The use of the SDG for peaking service will not challenge the seven-day fuel oil supply reserves for SDG operation relative to plant investment protection or RTNSS functions;
- Ensure adequate separation between the two SDG including their auxiliary and fuel oil supplies so that failure in one SDG does not result in loss of function of the other SDG;
- Provide protection against contamination of the ground or ground water through failure of tanks or buried piping;

- The standby diesel engine is designed to be compatible with the use of low sulfur and ultra-low sulfur diesel fuel;
- SDG fuel tanks are designed in accordance with State and Federal regulations for berm holding requirements; and
- The standby diesel fuel tanks provide fuel to the Auxiliary Boiler System, the diesel-engine driven Fire Protection System pump day tank, and the ADG fuel oil storage tanks.

Ancillary Diesel Generators

Each ADG is supplied by a separate dedicated fuel oil system. The ADGs provide post-accident power as described in Subsection 8.3.1.1.9. The fuel oil storage and transfer systems for the ADGs design bases are as follows:

- Provide a day tank of sufficient capacity to support ADG operation;
- Provide a long-term fuel oil storage capacity (fuel oil storage tank) dedicated to supplying the ADG with sufficient fuel to support ancillary diesel operation for a minimum of 7 days without refueling;
- Ensure adequate separation between the two ADG systems including their auxiliary and fuel oil supplies so that failure in one ADG does not result in loss of function of the other ADG;
- Provide protection against contamination of the ground or ground water through failure of tanks or buried piping;
- The ancillary diesel engine is designed to be compatible with the use of low sulfur and ultra-low sulfur diesel fuel;
- ADG fuel tanks are designed in accordance with State and Federal regulations for leak containment requirements; and
- The ancillary diesel fuel oil storage tanks can be filled by either a tanker truck via a fill station, or by manually initiated transfer from the yard (SDG) fuel oil storage tanks.

9.5.4.2 System Description

Summary Description

Standby Diesel Generators

A simplified diagram of a typical SDG fuel oil system is provided as Figure 9.5-9. The SDG manufacturer supplies the design of the system from the fuel oil day tank to the engine.

The SDG fuel oil system for each of the two SDG engines consists of separate fuel oil storage tanks; fuel oil day tanks; fuel oil transfer pumps; strainers/filters; oil purifier or tank connections for tying in a portable fuel oil purification system; instrumentation and controls; and the necessary interconnecting piping and valves. The SDG fuel oil storage and transfer system design includes redundant fuel oil transfer pump trains and a duplex filter skid (two filter elements). The redundant fuel oil transfer pumps are supplied from separate electrical power supplies and physically separated to prevent loss of function.

The SDG fuel oil storage and transfer system has piping connections to supply fuel to the Auxiliary Boiler system, diesel-engine driven Fire Protection System pump day tank, and ADG fuel oil storage tanks.

Ancillary Diesel Generators

A simplified diagram of a typical ADG fuel oil storage and transfer system is provided as Figure 9.5-9a. The ADG fuel oil system for each of the two ADG engines consists of separate fuel oil storage tanks; fuel oil day tanks; fuel oil transfer pumps; strainers/filters; oil purifier or tank connections for tying in a portable fuel oil purification system; instrumentation and controls; and the necessary interconnecting piping and valves.

Detailed System Description

Standby Diesel Generators

The two standby diesel generators, SDG-A and SDG-B, are used to address the NRC's probabilistic safety goals and are each housed in a separate enclosure in the Electrical Building adjacent to the Turbine Building. The seismic design of the Electrical Building is described in Subsection 19A.8.3. The units are identical and are held in reserve to furnish standby AC power in the event of Loss of Preferred Power (LOPP). Each SDG has its own day tank, which holds sufficient fuel oil to operate its corresponding SDG set for a minimum of eight hours at full load. Each SDG has its own storage tank, which holds sufficient fuel oil to operate its corresponding SDG a minimum of seven days without refueling. COL applicant will establish procedural controls to ensure a minimum fuel oil capacity is maintained onsite (9.5.4-1-A). Transfer pumps supply fuel oil to each day tank from the fuel oil storage tank. A bleed line returns excess fuel oil from the day tank for recirculation to the fuel oil storage tank.

An engine-driven fuel oil booster pump supplies fuel from the day tank to the diesel engine fuel manifold then to the engine fuel injector pumps and injectors. Day tank elevation is such that the engine fuel oil pump operates with flooded suction. There are no intermediate powered components to fail. A suction strainer limits foreign matter from entering the pump and causing malfunction.

Corrosion protection for underground portions of the fuel oil system is determined based on the material of the underground portion. If piping or components subject to corrosion, such as carbon steel piping, are utilized, corrosion protection for underground portions is provided. The COL applicant shall describe the material and corrosion protection for the underground portion of the fuel oil transfer system (COL 9.5.4-2-A).

A single SDG can meet full site standby power demands. Fuel oil transfer system piping and components up to the engine skid connection are designed and constructed in accordance with industry standards and ASME B31.1, as applicable, for above ground piping runs. The underground piping portions is designed and constructed in accordance with the latest industry standards for buried pipe including provisions for corrosion protection . The SDG fuel oil storage and transfer systems are capable of supporting the start requirements of the SDGs (refer to Subsection 8.3.1). The stored fuel oil meets the requirements of the ASTM D975 "Standard Specification for Diesel Fuel Oils" and the requirements of the SDG engine manufacturer. The quality of the fuel oil used for the SDG engine is assured by routine testing. Similarly, the piping supplying the Auxiliary Boiler and Fire Protection systems meets the above requirements.

The SDG fuel oil system has piping connections to supply fuel to the Auxiliary Boiler System, diesel-engine driven Fire Protection System pump day tank, and ADG fuel oil storage tanks. These piping connections tie into the diesel fuel oil storage tank at an elevated nozzle connection. This location ensures that fuel stored below this level is not affected by Auxiliary Boiler usage, Fire Protection system usage or transfers to the ADG fuel oil storage tanks. This ensures the seven-day Diesel Fuel Oil storage requirements cannot be used for any other purposes (COL 9.5.4-1-A).

Ancillary Diesel Generators

The two ancillary diesel generators, ADG-A and ADG-B, are each housed in a separate enclosure in the ADB, a seismic category II structure. The generator units and the loads they provide are discussed in Subsection 8.3.1.1.9. Each ADG has its own day tank, which holds sufficient fuel oil to support operation of its corresponding ADG set. Each ADG has its own dedicated fuel oil storage tank which holds sufficient fuel oil to operate its corresponding ADG a minimum of seven days without refueling. COL applicant will establish procedural controls to ensure a minimum fuel oil capacity is maintained onsite (9.5.4-1-A). A transfer pump supplies fuel oil to each day tank from the fuel oil storage tank. A bleed line returns excess fuel oil from the day tank for recirculation to the fuel oil storage tank.

Day tank elevation is such that the engine fuel oil pump operates with flooded suction. There are no intermediate powered components to fail. A suction strainer limits foreign matter from entering the pump and causing malfunction.

The transfer piping from the yard (SDG) fuel oil storage tanks to the ADG storage tanks is the only underground (direct bury) portion of the system. Corrosion protection for this underground portion of the ancillary fuel oil system is determined based on the material of the underground portion. If piping or components subject to corrosion, such as carbon steel piping, is utilized, corrosion protection for underground portions is provided (COL 9.5.4-2-A).

A seismic isolation device is provided to isolate the non-seismic piping from the yard storage tanks to the seismic category II transfer piping within the Ancillary Diesel Building.

Fuel oil transfer system piping and components up to the engine skid connection are designed and constructed in accordance with industry standards and ASME B31.1, as applicable, for above ground piping runs. The stored fuel oil meets the requirements of the ASTM D975 “Standard Specification for Diesel Fuel Oils” and the requirements of the diesel engine manufacturer. The quality of the fuel oil used for the ADG engine is assured by routine testing.

System Operation

Standby Diesel Generators

Transfer pumps supplying fuel oil to the day tanks from the yard tanks can be operated manually; however, level sensors on the day tanks normally operate them automatically. A "low" level signal starts the first transfer pump, a "low-low" level signal starts the standby transfer pump and a "high" level signal stops both pumps. The engine-driven fuel oil pump supplies fuel to the standby diesel engine fuel manifold from the day tank. Administrative controls ensure a minimum of fuel oil capacity is maintained onsite at all times (COL 9.5.4-1-A).

Ancillary Diesel Generators

Transfers from the yard (SDG) fuel oil storage tanks to the ancillary fuel oil storage tanks are controlled manually. Transfer pumps supplying fuel oil to the day tanks from the ancillary fuel oil storage tanks can be operated manually; however, level sensors on the day tanks normally operate them automatically. A "low" level signal starts the first transfer pump, a "low-low" level signal starts the standby transfer pump and a "high" level signal stops both pumps. The engine-driven fuel oil pump supplies fuel to the ancillary diesel engine fuel manifold from the day tank. Administrative controls ensure a minimum of fuel oil capacity is maintained onsite at all times (COL 9.5.4-1-A).

9.5.4.3 Safety Evaluation

Standby Diesel Generators

The SDGs and their auxiliary systems are not safety-related, and are not credited in any safety analysis. The fuel oil storage tanks are located a sufficient distance away from other plant buildings, or nearby buildings are protected with three-hour fire rated barriers. The fuel oil day tank is located in a separate room with three-hour fire rated concrete walls. Corrosion protection is provided for the underground portion of the fuel oil system. Biocides and other fuel additives are added, as required, to the stored fuel oil to prevent deterioration, accumulation of sludge in the tank, and the growth of algae and fungi. The design incorporates tank connections for periodic hookup to a portable fuel oil purification system. This prevents tank contamination and thus ensures the diesel oil storage tank maintains the fuel at the desired quality.

Ancillary Diesel Generators

The ADGs and their fuel oil storage and transfer systems, are not safety-related, and have no safety-related design basis. The fuel oil storage tanks are in separate concrete vaults, or rooms, located adjacent to the ADGs. The vaults or rooms are constructed of three-hour fire rated concrete walls. Corrosion protection is provided for underground fuel oil transfer piping from the yard fuel oil storage tanks to the ancillary fuel oil storage tanks. Biocides and other fuel additives are added, as required, to the stored fuel oil to prevent deterioration, accumulation of sludge in the tank, and the growth of algae and fungi. The design incorporates tank connections for periodic hookup to a portable fuel oil purification system. This prevents tank contamination and thus ensures the ancillary diesel oil storage tank maintains the fuel at the desired quality.

9.5.4.4 Tests and Inspections

Standby Diesel Generators

The SDG fuel oil storage and transfer system permits periodic testing and inspection.

SDG fuel oil storage and transfer system functionality is demonstrated during the regularly scheduled operational tests of the SDG. Periodic testing of instruments, controls, sensors and alarms assures reliable operation.

The ASTM standard fuel sample tests are conducted at regular intervals to ensure compliance with fuel composition limits recommended by the diesel engine manufacturer.

Each fuel oil storage tank is emptied and accumulated sediments are removed every 10 years to conform to Federal and State examination requirements.

New fuel oil is tested for specific gravity, cloud point and viscosity and visually inspected for appearance prior to addition to ensure that the limits of ASTM D975 are not exceeded. Analysis of other properties of the fuel oil is completed within thirty days of the receipt of the new fuel.

Ancillary Diesel Generators

The ADG fuel oil storage and transfer system permits periodic testing and inspection.

Ancillary DG fuel oil storage and transfer system functionality is demonstrated during the regularly scheduled operational tests of the ADGs. Periodic testing of instruments, controls, sensors and alarms assures reliable operation.

The ASTM standard fuel sample tests are conducted at regular intervals to ensure compliance with fuel composition limits recommended by the diesel engine manufacturer.

Each ancillary fuel oil storage tank is emptied and accumulated sediments are removed every 10 years to conform to Federal and State examination requirements.

New fuel oil is tested for specific gravity, cloud point and viscosity and visually inspected for appearance prior to addition to ensure that the limits of ASTM D975 are not exceeded. Analysis of other properties of the fuel oil is completed within thirty days of the receipt of the new fuel.

9.5.4.5 Instrumentation Requirements

Standby Diesel Generators

Indications and alarms for the fuel supply levels in the standby diesel storage and day tanks are provided.

Ancillary Diesel Generators

Indications and alarms for the fuel supply levels in the ancillary diesel storage and day tanks are provided.

9.5.4.6 COL Information

9.5.4-1-A Fuel Oil Capacity

COL applicant will establish procedural controls to ensure a minimum fuel oil capacity is maintained onsite for both SDGs and ADGs. (Subsection 9.5.4.2).

9.5.4-2-A Protection of Underground Portion

The COL applicant shall describe the material and corrosion protection for the underground portion of the fuel oil transfer systems associated with the SDGs. (Subsection 9.5.4.2)

9.5.4.7 References

9.5.4-1 ASME B31.1, "Power Piping"

9.5.4-2 ASTM D975, "Standard Specification for Diesel Fuel Oils"

9.5.5 Diesel Generator Jacket Cooling Water System

9.5.5.1 Design Bases

Safety Design Bases

The SDG jacket cooling water system is not safety-related and has no safety design basis.

The SDG jacket cooling water system has RTNSS functions, as a supporting system to provide power. These functions are described in Appendix 19A, which provides the level of oversight and additional requirements to meet the RTNSS functions. Performance of RTNSS functions is assured by incorporating the defense-in-depth principles of redundancy and physical separation at the system (SDG) level to ensure adequate reliability and availability.

Each of the two SDGs is equipped with its own dedicated jacket cooling water system. The subsystems, including jacket cooling water, associated with each SDG engine are independent and separated from the subsystems associated with the other SDG engine. Thus, the subsystems are not required to be designed with redundancy or defense in depth principles applied.

Each of the two ADGs is provided as a complete skid-mounted package. A separate jacket cooling water system beyond the cooling system provided integrally with the ADGs, is not required.

Power Generation Design Bases

A separate jacket cooling water system supplies each SDG.

The SDG jacket cooling water system is self-contained and sized to meet the full load cooling demands of the diesel-generator.

9.5.5.2 System Description

Summary Description

The jacket cooling water system design is supplied by the SDG manufacturer. A simplified diagram of a typical SDG jacket cooling water system is shown in Figure 9.5-10.

The SDG systems are standby power supply systems. The SDG jacket cooling water system is a self-contained, closed-loop system that circulates cooling water through the diesel engine, to maintain system operating temperature. The jacket cooling water, which picks up heat from the operating engine is cooled as it circulates through the jacket water heat exchanger. The system incorporates a keep-warm system to maintain the diesel in a pre-warmed state while in the standby mode to support engine start.

Detailed System Description

Each SDG unit is supplied with a complete closed-loop cooling system mounted integrally with the engine-generator package. Included in each cooling package are a jacket water heater and keep warm pump, temperature regulating valve, lube oil cooler, jacket water pumps, a manifold, a head tank and a jacket water heat exchanger. The jacket water heat exchanger rejects engine heat to the Reactor Component Cooling Water System (RCCWS). RCCWS water supply is from the same train as that of the SDG served. In addition to the engine (jacket and head), the jacket water cools the turbocharger, the governor, the engine air coolers, the exhaust manifold and the lube oil cooler. However, depending upon the engine manufacturer, the above components may vary slightly.

The installed electric heater is designed to keep the engine jacket water at a manufacturer recommended standby temperature.

The heat exchanger for the SDG jacket cooling water system is designed for a total heat removal rate based on the maximum permissible output of the SDG. Additional margin is included to assure reliable system operation. The jacket cooling water system piping is manufacturer designed and constructed.

The system is filled with high quality, treated water, to prevent long-term corrosion, from the Makeup Water System (MWS) to prevent long-term deterioration of the system internal surfaces. This makeup water is either manually or automatically controlled to the jacket water head tank. The level of the head tank allows the detection and control of system leakage.

System Operation

During the standby mode, the jacket water temperature is maintained within the range specified by the SDG manufacturer, based on normal ambient temperature, by the heater. The heated water is circulated through the engine by the keep-warm pump to maintain a uniform engine temperature. The SDG keep-warm heaters and circulating pumps are supplied with alternate power from the ancillary diesel generators, as described in Subsection 8.3.1.1.9, to support delayed SDG engine starting following loss of offsite power. This portion of the system is not required for the SDG operation; it only reduces stress during starts.

Depending upon the engine manufacturer, either one or two engine driven jacket water circulating pumps are provided to circulate the cooling water through the engine during SDG operation. The jacket cooling water passes through temperature control valve(s) that modulate the flow of water through or around the jacket water heat exchanger to maintain required water temperature. The functional capability of the system during high water levels (i.e. flooding) is assured since the system is engine driven and is a closed loop.

9.5.5.3 Safety Evaluation

The SDG jacket cooling water system serves no safety-related function. However it is designed robustly by the manufacturer to ensure highly reliable SDG operation.

9.5.5.4 Tests and Inspection

To ensure the availability of the SDG jacket cooling water system, scheduled inspection and testing of the equipment are performed as part of the overall engine performance checks. Instrumentation is provided to monitor cooling water temperatures, pressure, and head tank level. Instruments receive periodic calibration and inspection to verify their accuracy. During standby periods, the keep-warm feature of the engine water jacket cooling closed-loop system is checked at scheduled intervals to ensure that the water jackets are warm. The cooling water in the engine water jacket cooling closed-loop system is sampled and analyzed at regular intervals and is treated, as necessary, to maintain the desired quality.

9.5.5.5 Instrumentation Requirements

Pressure, temperature, and level instrumentation are provided for monitoring of system operating parameters. Alarms, locally and in the MCR, provide warning in case of system low or high water temperature, low pressure, or low water inventory. The diesel-generators trip on high-high cooling water temperature.

9.5.5.6 COL Information

None

9.5.5.7 References

None

9.5.6 Diesel Generator Starting Air System

9.5.6.1 Design Bases

Safety Design Bases

The SDG starting air system is not safety-related and has no safety design basis.

The SDG starting air system has RTNSS functions, as a supporting system to provide power. These functions are described in Appendix 19A, which provides the level of oversight and additional requirements to meet the RTNSS functions. Performance of RTNSS functions is assured by incorporating the defense-in-depth principles of redundancy and physical separation at the system (SDG) level to ensure adequate reliability and availablity.

Each of the two SDGs is equipped with its own dedicated starting air system. The subsystems, including starting air, associated with each SDG engine are independent and separated from the subsystems associated with the other SDG engine. Thus, the subsystems are not required to be designed with redundancy or defense in depth principles applied.

Each of the two ADGs is provided as a complete skid-mounted package. The ADGs are started via an electrical system provided integrally with the ADGs. Thus, a starting air system is not required for the ADGs.

Power Generation Design Bases

Each SDG is supplied by a separate starting air system. The SDG systems are standby power supply systems. The SDG starting air system meets the following design bases:

- Provides a supply of compressed air for starting the SDG engines without external power; and
- Starting air receivers have sufficient air storage capacity for three consecutive starts of the engine and perform the starting function so that the SDG meets the criteria defined in Subsection 8.3.1.1.8 Standby Onsite AC Power Systems.

9.5.6.2 System Description

Summary Description

Each system includes two air compressors, air receivers, and redundant air admission valves. When SDG electric power is required, the air admission valves are opened to initiate engine cranking.

The SDG manufacturer provides the SDG starting air system design. A simplified diagram of a typical SDG air starting system is provided in Figure 9.5-11

Detailed System Description

Each of the two SDGs is provided with its own starting air system, consisting of two redundant 100% capacity air compressors, air receiver, a 100% capacity air dryer, associated piping, and valves. Two redundant starting air valves, one in each engine starting air manifold, are provided for each engine. Failure of one valve does not affect the ability of the other valve to start the engine.

The air compressors are motor driven. Each compressor is equipped with appropriate moisture removal equipment. The air receivers are sized so each air starting system has sufficient capacity for cranking its engine for three automatic starts without recharging. Each air receiver is provided with an automatic drain trap at the receiver bottom to remove any water accumulated in the tank.

Each SDG starting air system is provided with an air dryer to ensure clean dry air for engine starting. The dryer is capable of controlling the dew point as recommended by the diesel engine manufacturer. It is equipped with filters to remove oil, dust and pipe scale from the air stream.

The air receiver, valves, and piping up to the first connection on the engine skid are designed to the ASME Boiler and Pressure Vessel Code, Section VIII, Division 1, ASME B31.1 or applicable industry standards. A low-pressure alarm setpoint is established to notify operators when the receiver pressure drops and multiple engine start attempts are not available.

System Operation

Normally, the air compressors operate automatically and are controlled by pressure sensors located on their respective air receivers. The pressure sensors signal the start and stop of the compressors, as necessary to maintain the required system pressure. Manual override of the automatic sequence is provided for emergency operation. The SDG starting air compressors are supplied with alternate power from the ancillary diesel generators, as described in Subsection 8.3.1.1.9, to support delayed SDG engine starting following loss of offsite power.

The valves receive a signal to open and initiate the engine starting sequence in the event of a total loss of offsite power (LOOP). If a start attempt is unsuccessful after a manufacturer specified period of time, the control system automatically detects the failure, activates an alarm to alert the operator, and allows for a restart attempt.

9.5.6.3 Safety Evaluation

The SDG starting air system serves no safety-related function.

9.5.6.4 Tests and Inspection

Periodic tests and inspections are performed on the following:

- Air receiver pressure control switches;
- Low pressure alarm signal for low receiver pressure;
- Engine air start valves and the admission line vent valve;
- Pressure gages on the receivers;
- Air receivers to clear accumulated moisture using the blowdown connection as required; and
- Air quality – oil, particulates, and dew point.

9.5.6.5 Instrumentation Requirements

The starting air receivers are designed to store sufficient amount of compressed air to ensure three engine start attempts. An air receiver low-pressure alarm is provided to alert the MCR operator of low starting air pressure, with a setpoint established to ensure that multiple engine starts are still available. A failed start attempt alarms if the engine fails to start within a manufacturer specified amount of time.

9.5.6.6 COL Information

None

9.5.6.7 References

9.5.6-1 ASME Boiler and Pressure Vessel Code (B&PVC), "Section VIII – Rules for Construction of Pressure Vessels"

9.5.6-2 ASME B31.1, "Power Piping

9.5.7 Diesel Generator Lubrication System

9.5.7.1 Design Bases

Safety Design Bases

The SDG lubrication system is not safety-related and has no safety design basis.

The SDG lubrication system has RTNSS functions, as a supporting system to provide power. These functions are described in Appendix 19A, which provides the level of oversight and additional requirements to meet the RTNSS functions. Performance of RTNSS functions is assured by incorporating the defense-in-depth principles of redundancy and physical separation at the system (SDG) level to ensure adequate reliability and availability.

Each of the two SDGs is equipped with its own dedicated lubrication system. The subsystems, including lubrication, associated with each SDG engine are independent and separated from the subsystems associated with the other SDG engine. Thus, the subsystems are not required to be designed with redundancy or defense-in-depth principles applied.

Each of the two ADGs is provided as a complete skid-mounted package. A separate lubrication system beyond that provided integrally with the ADGs, is not required.

Power Generation Design Bases

Each SDG is supplied by a separate lubrication system. The SDG lubrication system supplies clean filtered oil to the engine bearings at controlled pressure and temperature.

9.5.7.2 System Description

Summary Description

Each SDG includes a self-contained lubrication system including lube oil sump tank, circulating pump, filtering elements, and a cooler. The system filters the lubricating oil and delivers it at controlled pressure and temperature to the engine and generator bearing surfaces. Built-in lube oil storage capacity ensures adequate lubrication of wearing surfaces and cooling as necessary. The SDG keep-warm system continuously warms the lube oil to maintain the engine in standby readiness.

The SDG manufacturer supplies the lubrication system. A simplified diagram of a typical SDG lubrication system is provided in Figure 9.5-12.

Detailed System Description

Each of the two SDG lubrication systems consists of an oil sump in the engine frame, an engine-driven positive displacement pump, a cooler, a main header, strainer, and filters. The main engine-driven lube oil pump takes oil from the lube oil sump tank, passes it through the lube oil cooler and lube oil filter, through a strainer, through the main header, through the lube oil loads and back to the lube oil sump tank. The lubrication system also supplies oil to the combustion air turbochargers. Pressure-regulating valves maintain constant oil pressure to the main header by bypassing excess oil back to the lube oil sump tank. The system provides engine lubrication of moving surfaces and to remove engine heat.

Each lube oil cooler is built to industry standards as implemented by the engine manufacturer. Cooling water for the coolers is from the DG jacket cooling water system.

The SDG keep-warm systems use electric heaters to warm the engine and lube oil, as required, during standby. Motor driven pre-lube pumps are provided to circulate oil to pre-lubricate the engine bearings prior to starting. The engine lube oil sump is provided with level indication and can be manually replenished. The lube oil may be added to the engine oil sump during engine operation. The tanks, pumps, piping, and valves up to the engine connections are built to industry standards as implemented by the engine manufacturer. The engine is equipped with explosion proof doors to protect the engine in the event of a crankcase explosion.

System Operation

The SDG keep-warm systems are normally in operation when the SDGs are in their normal standby mode. The pre-lube pumps circulate oil to pre-lubricate the engine bearings, as required, prior to starting. The keep-warm heaters and circulating pumps for the standby SDGs are supplied with alternate power from the ancillary diesel generators, as described in Subsection 8.3.1.1.9, to support delayed engine starting following loss of offsite power. When an engine starts, the lube oil keep-warm subsystem shuts down and the engine-driven lube oil pump begins circulating oil through the filters and manifold to the engine bearing surfaces and back to the sump. The oil pumps are engine driven and therefore are not affected by flooding or power losses so lube oil circulation continues until the engine is shutdown.

9.5.7.3 Safety Evaluation

The SDG lubrication system serves no safety-related function.

9.5.7.4 Tests and Inspection

The functionality of the SDG lubrication system is tested and inspected during scheduled operational testing of the overall engine. Instrumentation is provided to monitor lube oil temperature, pressure and sump level, ensuring proper operation of the system. During standby periods, the keep-warm system is checked at scheduled intervals to ensure that the oil is warm. The lube oil is periodically sampled and analyzed to ensure quality.

Instruments are periodically calibrated and tested to verify their accuracy.

The lubrication systems are located in the SDG rooms, which are provided with personnel control access, precluding unauthorized personnel from interfering with system operation. Also, any contamination of the lubricating oil is thereby prevented.

9.5.7.5 Instrumentation Requirements

Pressure, temperature, and level instrumentation is provided for monitoring of important system operating parameters. Alarms in the MCR provide warning in case of system low or high temperature, low pressure, or low oil inventory. The diesel-generators trip on low-low lubricating oil pressure.

9.5.7.6 COL Information

None

9.5.7.7 References

None

9.5.8 Diesel Generator Combustion Air Intake and Exhaust System

9.5.8.1 Design Bases

Safety Design Bases

The SDG combustion air intake and exhaust system is not safety-related and has no safety design basis.

The SDG combustion air intake and exhaust system has RTNSS functions, as a supporting system to provide power. These functions are described in Appendix 19A, which provides the level of oversight and additional requirements to meet the RTNSS functions. Performance of RTNSS functions is assured by incorporating the defense-in-depth principles of redundancy and physical separation at the system (SDG) level to ensure adequate reliability and availability.

Each of the two SDGs is equipped with its own dedicated combustion air intake and exhaust. The subsystems, including combustion air intake and exhaust, associated with each SDG engine are indedpendent and separated from the subsystems associated with the other SDG engine. Thus, the subsystems are not required to be designed with redundancy or defense in depth principles applied.

Each of the two ADGs is provided as a complete skid-mounted package. A separate combustion air intake and exhaust system beyond that provided integrally with the ADGs, is not required.

Power Generation Design Bases

Each SDG is supplied by a separate air intake and exhaust system.

The SDG systems supply standby electric power. The SDG combustion air intake and exhaust system is designed to meet the following design bases:

- Provide a supply of combustion air for operating the diesel engines;
- Prevent ingress to the diesel engines of contaminating substances that could degrade the diesel engine performance;
- Provide a diesel engine exhaust system capable of exhausting the products of combustion to the atmosphere ensuring no thermal impact on the building, other systems or material; and
- Federal, State and Local Air Quality Emission Standards.

9.5.8.2 System Description

Summary Description

Each SDG is provided with a separate intake and exhaust system. The combustion air intake and exhaust system supplies filtered air for engine fuel combustion. The system also exhausts engine combustion products out of the SDG enclosure to the atmosphere. It includes intake and exhaust silencers to ensure quiet engine operation.

The diesel generator manufacturer supplies the SDG air intake and exhaust system design. A simplified diagram of a typical SDG air intake and exhaust system is provided in Figure 9.5-9.

Detailed System Description

Each engine takes combustion air from its own cubical in the SDG room. Air enters the cubical through the outside wall and is filtered before entering the air intake plenum (which may be integral to the turbocharger). Combustion air is drawn from the intake plenum through an air intake silencer (which may be integral to the turbocharger) and then is drawn into the engine turbocharger(s) which discharges through an intercooler into the diesel engine combustion air manifold.

A differential pressure gage is installed across the filters to monitor the filter condition.

Each engine has its own exhaust system. The engine exhaust is collected in an exhaust manifold and directed to the turbine section of the turbocharger where it imparts energy to spin the compressor. The hot exhaust is discharged from the turbo to the exhaust silencers. The exhaust outlet is well removed from the air inlet to prevent any recirculation of exhaust gases. The exhaust lines are appropriately insulated and routed to ensure no negative impact on adjacent equipment, materials or building areas. The engine design provides for crankcase venting such that crankcase gases are not mixed with the fresh air intake to eliminate combustion potential.

Nitrogen, hydrogen and CO_2 storage tanks are located at a sufficient distance away from the DG air inlet to preclude engine malfunction or explosions and to ensure that the engine intake air, oxygen level is not diluted.

In order to ensure exhaust emissions meet Federal, State and Local Air Quality Emissions Standards, the SDG engine design employs either an engine control system, an exhaust gas treatment system, or both.

System Operation

There are no active components in the combustion air intake and exhaust system. Combustion air is drawn into the turbocharger by vacuum when the diesel engine is started and exhausted after combustion. The turbocharger pressurizes the intake manifold gases prior to entry to the cylinders to improve combustion.

9.5.8.3 Safety Evaluation

The SDG combustion air intake and exhaust system serves no safety-related function.

9.5.8.4 Inspection and Testing Requirements

Visual inspection of the SDG combustion air intake and exhaust system is performed concurrently with regularly scheduled SDG testing and inspection. Inspection of the integrity of the ducting and joints, filter condition, intake and exhaust silencer condition is included in SDG maintenance procedures.

9.5.8.5 Instrumentation Requirements

The air intake filters are equipped with differential pressure gages to monitor the filter condition. An alarm is provided in the MCR to signal a high differential pressure condition. Engine high combustion air exhaust temperature or high crankcase pressure provide alarms in the MCR.

9.5.8.6 COL Information

None

9.5.8.7 References

None

Table 9.5-1

Lists of Applicable Codes for Fire Protection

American Society of Mechanical Engineers (ASME)
A17.1, Safety Code for Elevators and Escalators B31.1, Power Piping NQA-1, Quality Assurance Programs Requirements for Nuclear Facilities
American Society for Testing and Materials (ASTM)
ASTM E-84, Standard Test Method for Surface Burning Characteristics of Building Materials ASTM E-119, Fire Test of Building Construction Materials ASTM E-814, Standard Test Method for Fire Tests for Through-Penetration Fire Stops
Applicable Building Codes
International Building Code International Fire Code American Disability Act (ADA) Accessibility Guidelines – 28 CFR 36
Factory Mutual
Factory Mutual (FM) Approval Guide
Institute of Electrical and Electronics Engineers (IEEE)
C2, National Electric Safety Code IEEE 383, Standard for Qualifying Class 1E Electric Cables and Field Splices for Nuclear Power Generating Stations IEEE 384, Standard Criteria for Independence of Class 1E Equipment and Circuits IEEE 1202, Standard for Flame-Propagation Testing of Wire and Cable
National Fire Protection Association (NFPA)
NFPA 10, Standard for Portable Fire Extinguishers NFPA 11, Standard for Low-, Medium, and High-Expansion Foam Systems NFPA 12, Standard for Carbon Dioxide Extinguishing Systems NFPA 13, Standard for Installation of Sprinkler Systems NFPA 14, Standard for the Installation of Standpipe and Hose Systems NFPA 15, Standard for Water Spray Fixed Systems for Fire Protection NFPA 16, Standard for the Installation of Foam-Water Sprinkler Systems and Foam-Water Spray Systems NFPA 20, Standard for the Installation of Stationary Pumps for Fire Protection NFPA 22, Standard for Water Tanks for Private Fire Protection NFPA 24, Standard for the Installation of Private Fire Service Mains and their Appurtenances NFPA 30, Flammable and Combustible Liquids Code NFPA 37, Standard for the Installation and Use of Stationary Combustion Engines and Gas Turbines NFPA 51B, Standard for Fire Prevention During Welding, Cutting, and other Hot Work NFPA 70, National Electric Code NFPA 72, National Fire Alarm Code

Table 9.5-1

Lists of Applicable Codes for Fire Protection (Continued)

NFPA 80, Standard for Fire Doors and Fire Windows
NFPA 80A, Recommended Practice for Protection of Buildings from Exterior Fire Exposures
NFPA 90A, Standard for the Installation of Air-Conditioning and Ventilating Systems
NFPA 92A, Standard for Smoke Control Systems Utilizing Barriers and Pressure Differences
NFPA 101, Life Safety Code
NFPA 204, Standard for Smoke and Heat Venting
NFPA 214, Standard on Water Cooling Towers
NFPA 241, Standard for Safeguarding Construction, Alteration, and Demolition Operations
NFPA 251, Standard Method of Tests of Fire Endurance of Building Construction and Materials
NFPA 252, Standard Method of Fire Tests of Door Assemblies
NFPA 255, Standard Method of Test of Surface Burning Characteristics of Building Materials
NFPA 497, Recommended Practices for the Classification of Flammable Liquids, Gases, or Vapors and of Hazardous (Classified) Locations for Electrical Installations in Chemical Process Areas
NFPA 600, Standard on Industrial Fire Brigades
NFPA 701, Standard Methods of Fire Tests for Flame Propagation of Textiles and Films
NFPA 780, Standard for the Installation of Lightning Protection Systems
NFPA 801, Standard for Fire Protection Practices for Facilities Handling Radioactive Materials
NFPA 804, Standard for Fire Protection for Advanced Light Water Reactor Electric Generating Plants
NFPA 1404, Standard for Fire Service Respiratory Protection Training
NFPA 1451, Standard for a Fire Service Vehicle Operations Training Program
NFPA 1500, Standard on Fire Department Occupational Safety and Health Program
NFPA 1961, Standard for Fire Hose
NFPA 1962, Standard for the Inspection, Care, and Use of Fire Hose, Couplings, and Nozzles and the Service Testing of Fire Hose
NFPA 1963, Standard for Fire Hose Connections
NFPA 1964, Standard for Spray Nozzles
Occupational Safety and Health Act (OSHA)
29 CFR 1910, Occupational Safety and Health Standards
29 CFR 1926, Safety and Health Regulations for Construction
Underwriters Laboratories (UL)
Underwriters Laboratories (UL) Fire Protection Equipment Directory
NRC Regulations and Guidance
10 CFR 50.48, Fire Protection
10 CFR 50, Appendix A, GDC 3, Fire Protection
10 CFR 50, Appendix A, GDC 5, Sharing of Structures, Systems, and Components
10 CFR 50, Appendix A, GDC 19, Control Room
10 CFR 50, Appendix A, GDC 23, Protection System Failure Modes

Table 9.5-1

Lists of Applicable Codes for Fire Protection (Continued)

NUREG-0800, Standard Review Plan (SRP) 9.1.3 Spent Fuel Pool Cleaning and Cleanup System
NUREG-0800, Standard Review Plan (SRP) 9.5.1 Fire Protection Program
NUREG-0800, Branch Technical Position SPLB 9.5-1, Guidelines for Fire Protection for Nuclear Power Plants
NUREG-0800, Branch Technical Position SPLB 9.5-1, Appendix B, Supplemental Fire Protection Review Criteria for Advance Reactors
NUREG-1552, Fire Barrier Penetration Seals in Nuclear Power Plants
RG 1.13, Spent Fuel Storage Facility Design Basis
RG 1.39, Housekeeping Requirements for Water-Cooled Nuclear Power Plants
RG 1.189, Fire Protection for Operating Nuclear Power Plants

Table 9.5-2

FPS Component Design Characteristics

Firewater Pumps	
Primary motor-driven fire pump	484 m^3/hr (2,130 gpm) ***
Primary diesel-driven fire pump	484 m^3/hr (2,130 gpm) ***
Secondary motor-driven fire pump*	484 m^3/hr (2,130 gpm) ***
Secondary diesel-driven fire pump*	484 m^3/hr (2,130 gpm) ***
Primary motor-driven jockey pump	4.54 m^3/hr (20.0 gpm) minimum as required to maintain the NI firewater loop pressure 34.5 kPa (5.00 psi) above the start pressure of the fire pumps
Secondary motor-driven jockey pump	4.54 m^3/hr (20.0 gpm) minimum as required to maintain the yard main loop pressure 34.5 kPa (5.00 psi) above the start pressure of the fire pumps
Required minimum total makeup flow rate to IC/PCCS and spent fuel pools at 72 hours into an event	46 m^3/hr (200 gpm)
Firewater Storage	
Primary storage tanks combined minimum usable firewater storage	3900 m^3 (1,030,000 gallons)
Secondary storage minimum firewater storage**	2082 m^3 (550,000 gallons)

* Secondary fire pumps may be new or existing depending upon available site-specific provisions.

** Secondary firewater storage may be a tank, cooling tower basin, or a large body of water depending upon available site-specific provisions. Storage volume listed is the minimum storage volume to be dedicated for fire protection use.

*** Based on the largest firewater demand of 967 m^3/hr (4260 gpm) for Turbine Building, including hose stream.

Table 9.5-3

Typical Luminance Ranges for Normal Lighting

Location	Luminance Range (Lux)	(Foot-candles)
Auxiliary Building and Uncontrolled Access Areas	150-200	15-20
Controlled Access Areas		
– Count Room	750-1000	75-100
– Laboratories	750-1000	75-100
– Health Physics Office	1500-2000	150-200
– Medical Aid Room	1500-2000	150-200
– Hot Laundry	300-500	30-50
– Storage Room	150-200	15-20
– Engineered Safety Features Equipment	300-500	30-50
– Battery Rooms	300-500	30-50
Electrical Building (w/ DG)	300-500	30-50
Fuel Handling Area		
– Operating Floor	300-500	30-50
– Below Operating Floor	150-200	15-20
Off Gas Building	150-200	15-20
Radwaste Building	300-500	30-50
Reactor Building		
– Operating Floor	300-500	30-50
– Below Operating Floor	150-200	15-20
Control Room		
– Main Control Boards	300-500	30-50
– Auxiliary Control Panels	300-500	30-50
– Operator's Station	750-1000	75-100
– Emergency Lighting	100 minimum	10 minimum
Turbine Building		
– Operating Floor	300-500	30-50
– Below Operating Floor	150-200	15-20
Switchgear and Motor Control Centers	300-500	30-50
HVAC Equipment Areas	50-75	5-7.5
Exterior Areas	10-20	1-2
Remote Shutdown Station Emergency Lighting	100 minimum	10 minimum

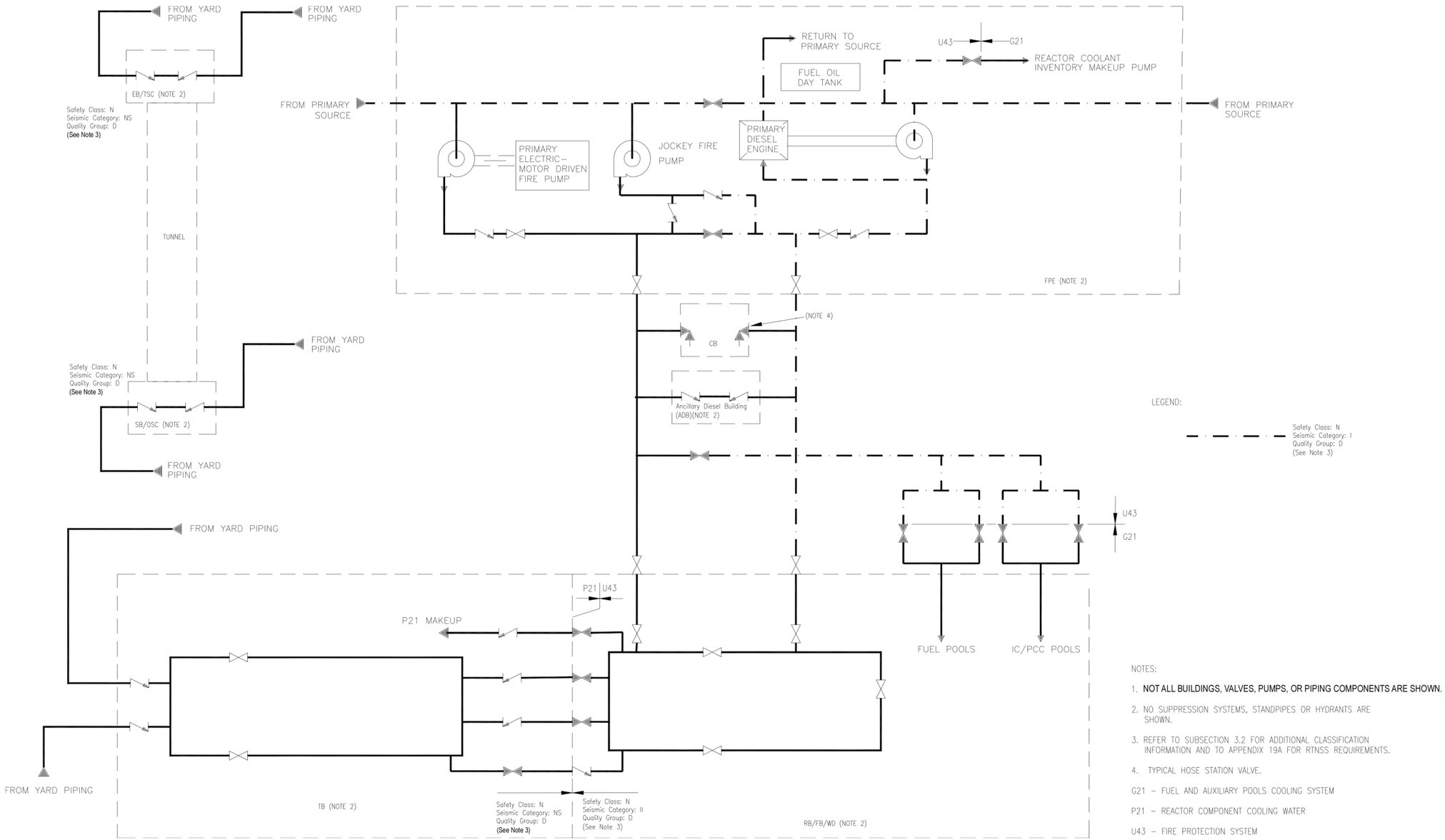

Figure 9.5-1. Fire Protection System Simplified Diagram

Figure 9.5-2. (Deleted)

Figure 9.5-3. (Deleted)

Figure 9.5-4. (Deleted)

Figure 9.5-5. (Deleted)

Figure 9.5-6. (Deleted)

Figure 9.5-7. (Deleted)

Figure 9.5-8. (Deleted)

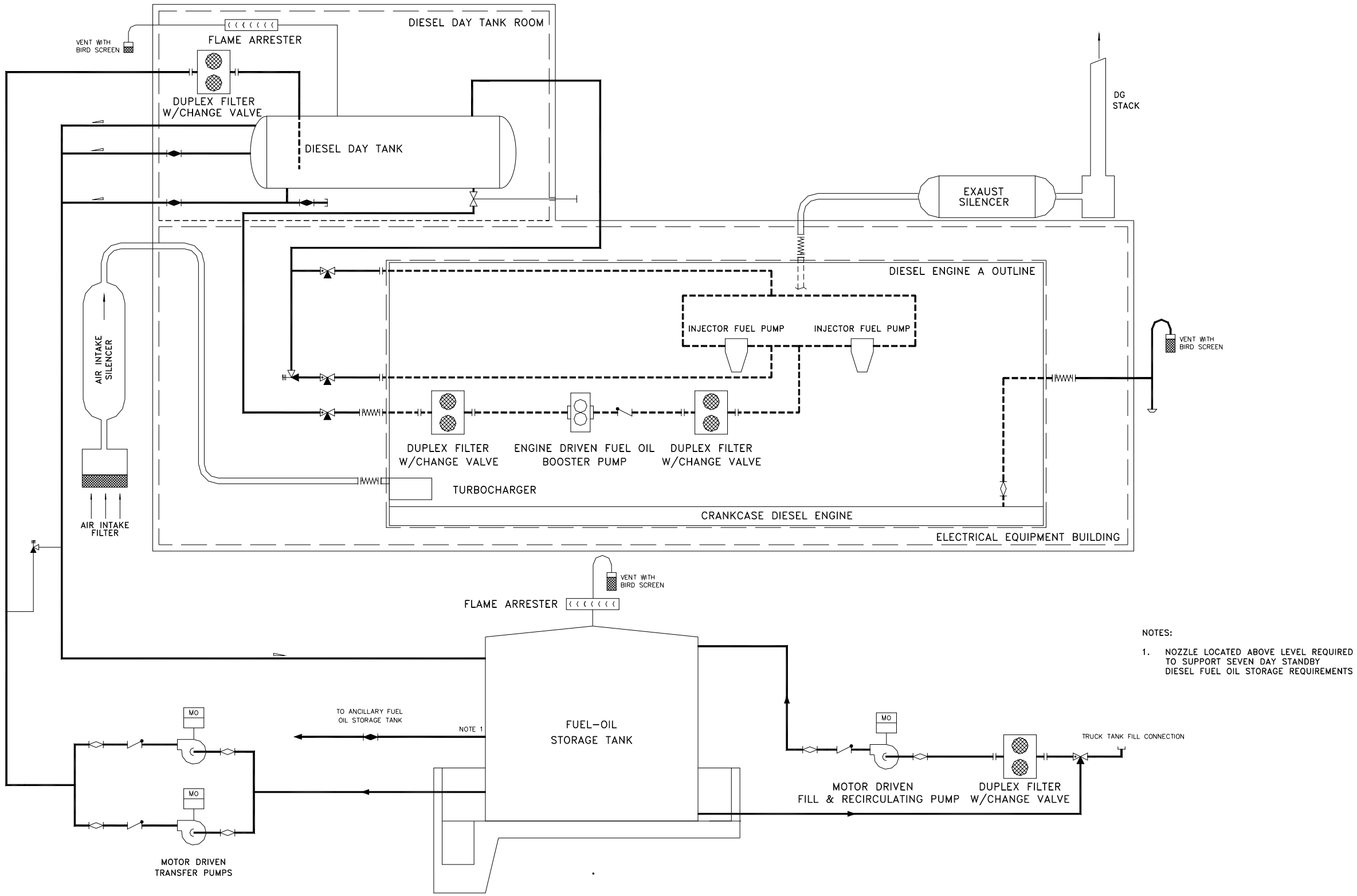

Figure 9.5-9. Standby Diesel Generator Fuel Oil Storage and Transfer System & Air Intake and Exhaust System Diagram

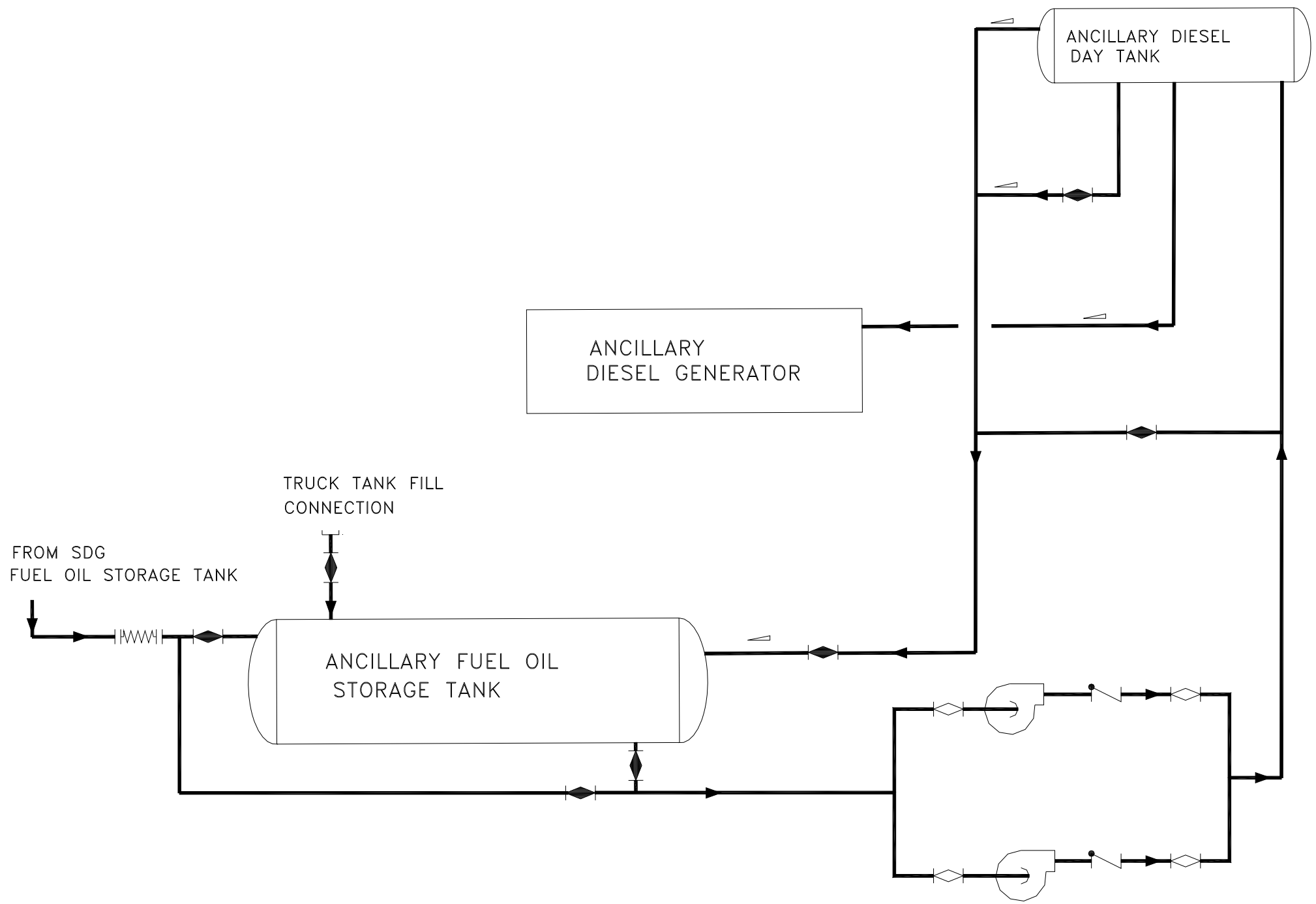

Figure 9.5-9a. Ancillary Diesel Generator Fuel Oil Storage and Transfer System Diagram

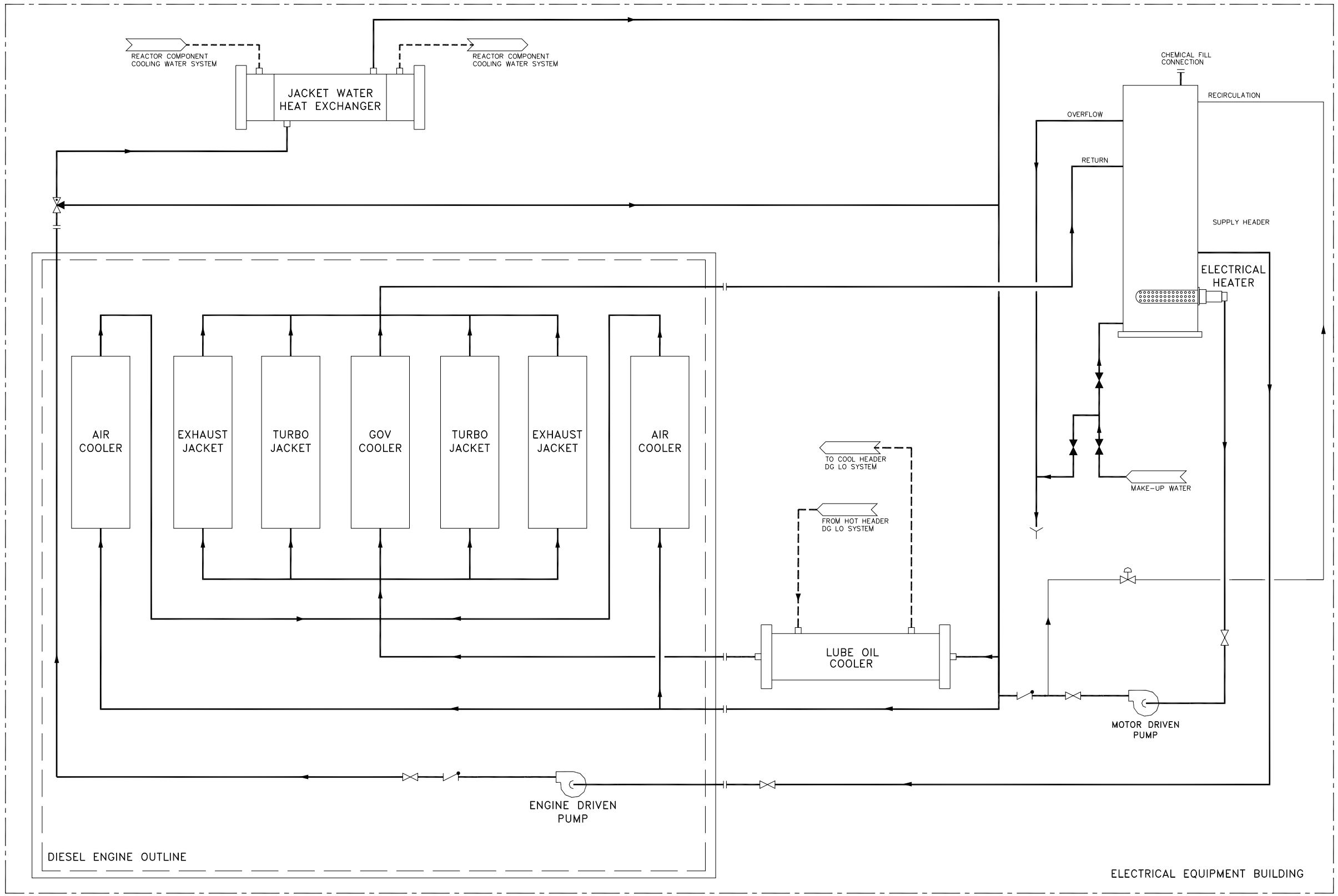

Figure 9.5-10. Standby Diesel Generator Jacket Cooling Water System Diagram

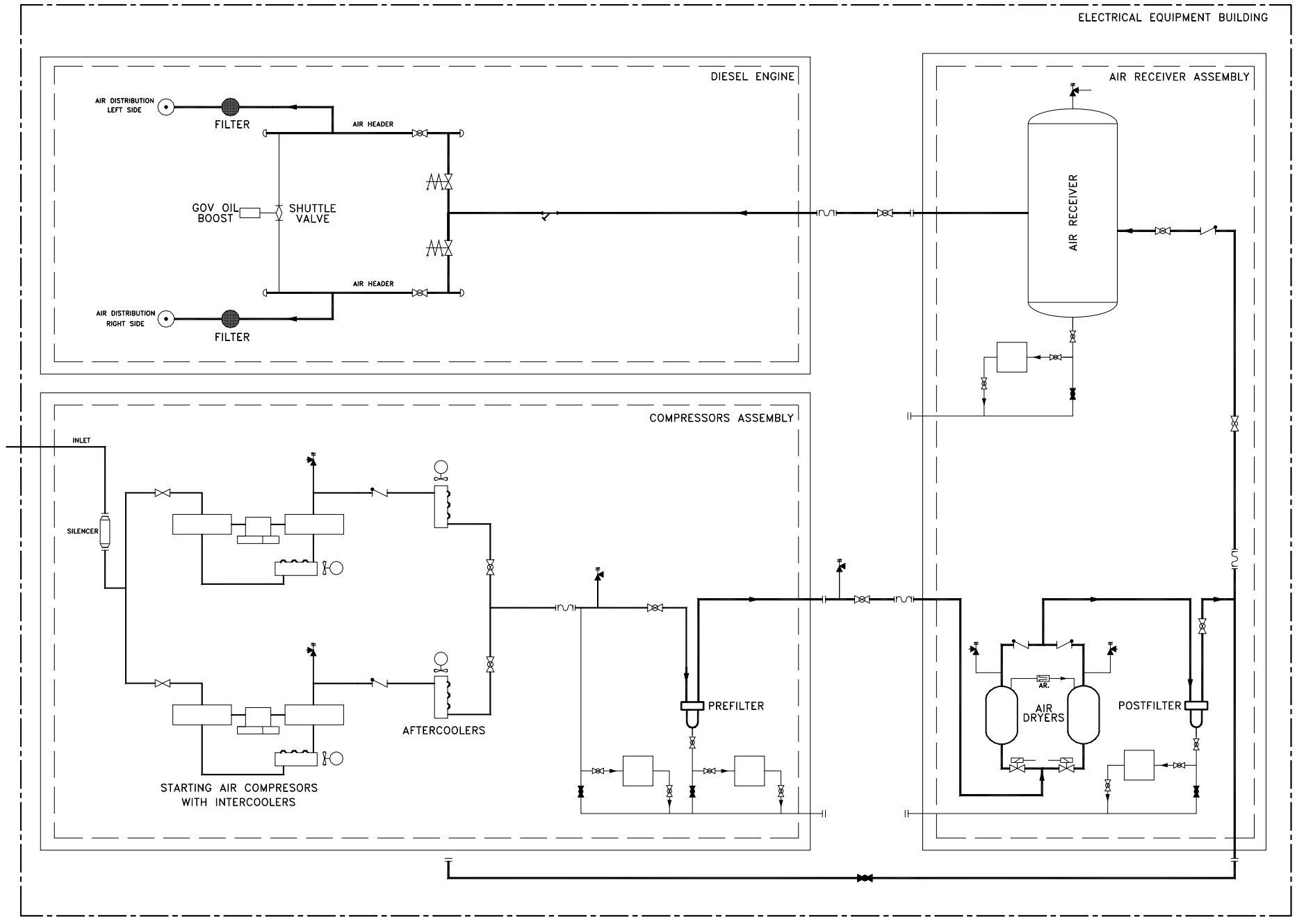

Figure 9.5-11. Standby Diesel Generator Starting Air System Diagram

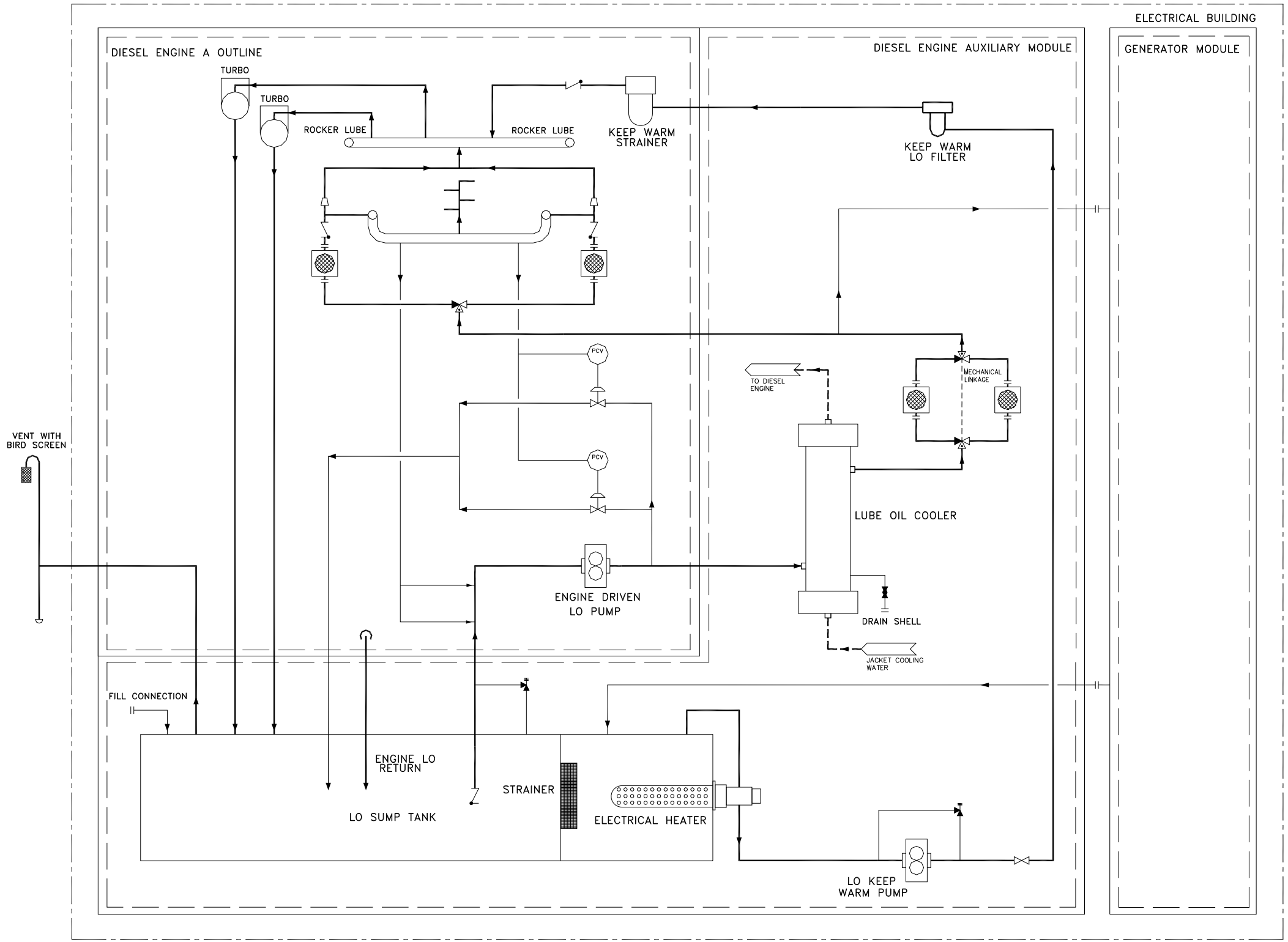

Figure 9.5-12. Standby Diesel Generator Lubrication System Diagram