RASC-12

U.S. NRC
In re DAVID GEISEN GEISEN Exhibit # 12
Docket # 1A-05-052
Date Marked for ID: 12/10, 2008 (Tr. p. 1534)
Date Offered in Ev: 12/10, 2008 (Tr. p. 1534)
Through Witness/Panel: N/A
Action: ADMITTED REJECTED WITHDRAWN
Date: 12/10, 2008 (Tr. p. 1534)

Rodney M. Cook
08/29/01 05:13 PM

To: Steven P. Moffitt/CEI/FirstEnergy@FirstEnergy, Lonnie W. Worley/TE/FirstEnergy@FirstEnergy
cc: Yvonne M. Leidorf/TE/FirstEnergy@FirstEnergy, Jacqueline J. Gezo/TE/FirstEnergy@FirstEnergy, David H. Lockwood/TE/FirstEnergy@FirstEnergy, Dale L. Miller/TE/FirstEnergy@FirstEnergy
Subject: Response to Bulletin 2001-01

Steve and Lonnie,

Here is the revised response to Bulletin 2001-01 considering the TMI, CR-3 and ANO-1 responses. It reflects the ANO-1 response more than the TMI and CR-3 responses (i.e., for the expansion criteria only) because 1) we have six months before our refueling, and 2) the TMI and cr-3 outages are within approximately 45 days from now. By using the ANO response, we can gain some insight from the TMI, CR-2 and Oconee-3 outages in September, October and November, provide a supplemental response to NRC that should reflect proven techniques and methodology. The specific pages that have been changed to reflect this are pages 5 and 7, and the commitment list of the attached. As a note, the rest of our submittal is consistent with the TMI, ANO, and CR-3 responses and MRP-48 regarding Applicable Regulatory Requirements. The other issues are plant specific and have been verified to be consistent with the type of information provided by the other utilities.

Rod
x7782

Serial 2731 8-29-01 Version 1g-ANO.P

DOCKETED
USNRC

September 9, 2009 (11:00am)

OFFICE OF SECRETARY
RULEMAKINGS AND
ADJUDICATIONS STAFF

FE706-0682 NRC035-0682

NRC035-0682

TEMPLATE = SECY 028

DS-02

Docket Number 50-346

License Number NPF-3

Serial Number 2731

U.S. Nuclear Regulatory Commission
Attention: Document Control Desk
Washington, D.C. 20555-0001

Subject: Response to NRC Bulletin 2001-01, "Circumferential Cracking of Reactor Pressure Vessel Head Penetration Nozzles"

Ladies and Gentlemen:

On August 3, 2001, the Nuclear Regulatory Commission (NRC) issued NRC Bulletin 2001-01, "Circumferential Cracking of Reactor Pressure Vessel Head Penetration Nozzles." The Bulletin requested information regarding the structural integrity of the reactor pressure vessel head penetration (VHP) nozzles, including the extent of nozzle leakage and cracking that has been found to date, inspections and repairs that have been completed to satisfy applicable regulatory requirements, and the basis for concluding that plans for future inspections will ensure compliance with applicable regulatory requirements.

The Davis-Besse Nuclear Power Station (DBNPS) has scheduled VHP inspections during the upcoming spring 2002 refueling outage. The FirstEnergy Nuclear Operating Company (FENOC) provides the attached information for the DBNPS in response to NRC Bulletin 2001-01.

If you have any questions, or require further information, please contact Mr. David H. Lockwood, Manager, Regulatory Affairs, at (419) 321-8450.

Very truly yours,

RMC/

Enclosure and Attachments

FE706-0684 NRC035-0683

NRC035-0683

cc: J. E. Dyer, Regional Administrator, NRC Region III
S. P. Sands, DB-1 NRC/NRR Project Manager
K. S. Zellers, DB-1 Senior Resident Inspector
Utility Radiological Safety Board

FE706-0685 NRC035-0684

NRC035-0684

Docket Number 50-346
License Number NPF-3
Serial Number 2731
Enclosure
Page 1 of 1

RESPONSE TO

NRC BULLETIN 2001-01

FOR

DAVIS-BESSE NUCLEAR POWER STATION

UNIT NUMBER 1

This letter is submitted pursuant to 10 CFR 50.54(f) and contains information pursuant to NRC Bulletin 2001-01, "Circumferential Cracking of Reactor Pressure Vessel Head Penetration Nozzles," for the Davis-Besse Nuclear Power Station, Unit Number 1.

I, Guy G. Campbell, state that (1) I am Vice President - Nuclear of the FirstEnergy Nuclear Operating Company, (2) I am duly authorized to execute and file this certification on behalf of the Toledo Edison Company and The Cleveland Electric Illuminating Company, and (3) the statements set forth herein are true and correct to the best of my knowledge, information and belief.

By: _____
Guy G. Campbell, Vice President - Nuclear

Affirmed and subscribed before me

_____
Notary Public, State of Ohio

FE706-0686 NRC035-0685

NRC035-0685

Response to NRC Bulletin 2001-01 for the Davis-Besse Nuclear Power Station

The following information is provided in response to NRC Bulletin 2001-01, "Circumferential Cracking of Reactor Pressure Vessel Head Penetration Nozzles," for the Davis-Besse Nuclear Power Station (DBNPS).

NRC Bulletin Request Item 1.a:

> The plant-specific susceptibility ranking for your plant(s) (including all data used to determine each ranking) using the PWSCC susceptibility model described in Appendix B to the MRP-44, Part 2, report.

Response:

The DBNPS has been analyzed for susceptibility relative to the Oconee Nuclear Station, Unit 3 (ONS3) using the Materials Reliability Program (MRP) time-at-temperature Primary Water Stress Corrosion Cracking (PWSCC) model. The parameters used in this ranking are included in Attachment 2. This evaluation showed that it will take the DBNPS 3.1 Effective Full Power Years (EFPY) of additional operation from March 1, 2001, to reach the same time-at-temperature as ONS3 when leaking nozzles were discovered in March 2001.

The DBNPS falls into the NRC category of plants within 5 EFPY of ONS3.

NRC Bulletin Request Item 1.b:

> A description of the VHP nozzles in your plant(s), including the number, type, inside and outside diameter, materials of construction, and the minimum distance between VHP nozzles.

Response:

The DBNPS has 69 Control Rod Drive Mechanism (CRDM) nozzles of which 61 are used for CRDMs, 7 are spare, and one is used for the Reactor Pressure Vessel (RPV) head vent piping which extends from the CRDM nozzle and terminates at the top of Steam Generator Number 2. Each CRDM nozzle is constructed of Inconel Alloy 600 and is attached to the RPV head by an Inconel Alloy 182 J-groove weld. The RPV head is constructed of carbon steel and is internally clad with stainless steel. The material for the nozzles was supplied by two suppliers. B&W Tubular Products supplied material for 60 nozzles and Huntington Alloys supplied the material for the remaining 9 nozzles. The head arrangement and requested nozzle details are provided in Attachment 2.

NRC Bulletin Request Item 1.c:

> A description of the RPV head insulation type and configuration.

Response:

The DBNPS has metal reflective horizontal vessel head insulation. Metal reflective insulation is used on the exterior of the vessel from the closure flange down to and including the exterior of the bottom head dome. Removable metal reflective insulation panels enclose the top head closure flange and studs. Metal reflective insulation is used on the RPV head. A gap exists between the RPV head and the insulation, the minimum gap being at the dome center of the RPV head where it is approximately 2 inches, and will not impede a qualified visual inspection. This is shown in the attached DBNPS drawing 7749-M-197-2-3 of the general arrangement outline for the RPV insulation.

NRC Bulletin Request Item 1.d:

> A description of the VHP nozzle and RPV head inspections (type, scope, qualification requirements, and acceptance criteria) that have been performed at your plant(s) in the past 4 years, and the findings. Include a description of any limitations (insulation or other impediments) to accessibility of the bare metal of the RPV head for visual examinations.

Response:

The DBNPS has performed two inspections within the past four years, during the 11th Refueling Outage (RFO) in April 1998 and during the 12th RFO in April 2000. The scope of the visual inspection was to inspect the bare metal RPV head area that was accessible through the weep holes to identify any boric acid leaks/deposits. The DBNPS also inspected 100% of Control Rod Drive Mechanism (CRDM) flanges for leaks in response to Generic Letter 88-05, "Boric Acid Corrosion of Carbon Steel Reactor Pressure Boundary Components in PWR Plants." The results of these two recent inspections are described below.

Inspections of the RPV head are performed with the RPV head insulation installed in accordance with DBNPS procedure NG-EN-00324, "Boric Acid Corrosion Control Program," which was developed in response to Generic Letter 88-05. As stated previously, a gap exists between the RPV head and the insulation, the minimum gap being at the dome center of the RPV head where it is approximately 2 inches, and will not impede visual inspection. The service structure envelopes the DBNPS RPV head and has 18 openings (weep holes) at the bottom through which inspections are performed. There are 69 CRDM nozzles that penetrate the RPV head. The metal reflective insulation is located above the head and does not interfere with the visual inspection. The visual inspection is performed by the use of a small camera mounted on a wire pole. This camera is inserted through the weep holes.

- April 1998 Inspection Results (11RFO)
  This visual inspection showed an uneven layer of boric acid deposits scattered over the head. There were some lumps of boron, with the color varying from brown to white. The outside diameter of the CRDM tubes showed white streaks, providing evidence of downward flow and attributable to CRDM flange leakage. The head was cleaned by use of a manual

scrubber and vacuum through the weepholes. The head was videotaped after cleaning for future reference.

- April 2000 Inspection Results (12RFO)
  In April 2000, Framatome Nuclear Power Services performed a 100% video inspection of CRDM flanges above the RPV insulation. Five leaking CRDM flanges were identified at locations F10, D10, C11, F8, and G9. The main source of leakage was associated with the D10 CRDM flange. Positive evidence (boron deposits on the vertical faces of the CRDM flanges and nozzle) existed that drives F8, F10 and C11 had limited gasket leakage. CRDM G9 had boron deposits under the CRDM flange between the flange and insulation, providing confidence that this leakage was associated with flange leakage. All five CRDM gaskets were replaced and the D10 CRDM flange was machined. Visual inspection of the flanges was performed. Some boric acid crystals had accumulated on the RPV head insulation beneath the leaking flanges. These deposits were cleaned (vacuumed). After cleaning, the area above the insulation was videotaped for future reference.

  Inspection of the RPV head/nozzles area indicated some accumulation of boric acid deposits. The boric acid deposits were located beneath the leaking flanges with clear evidence of downward flow. No visible evidence of nozzle leakage was detected. The RPV head area was cleaned with demineralized water to the greatest extent possible while maintaining the principles of As-Low-As-Reasonably-Achievable (ALARA) regarding the dose. Subsequent video inspection of the cleaned RPV head areas and nozzles was performed for future reference.

- Subsequent Review of 1998 and 2000 Inspection Videotapes Results
  Since May 2001, a review of the 1998 and 2000 inspection videotapes of the RPV head has been performed. This review was conducted to re-confirm the indications of boron leakage experienced at the DBNPS were not similar to the indications seen at ONS and ANO-1; i.e., was not indicative of RPV nozzle leakage. This review determined that indications such as those that would result from RPV head penetration leakage were not evident.

NRC Bulletin Request Item 1.e:

A description of the configuration of the missile shield, the CRDM housings and their support/restraint system, and all components, structures, and cabling from the top of the RPV head up to the missile shield. Include the elevations of these items relative to the bottom of the missile shield.

Response:

The lower section of the service structure is welded to the head. The service structure then bolts to this lower section. Fan holes are provided to allow forced air cooling of CRDMs. Ductwork connected to two remotely mounted, 100 percent capacity cooling fans is mounted over the fan holes in the service structure. The lower portion of the service structure is also provided with

ledges to support the RPV head insulation. The upper portion of the service structure cylinder is provided with a monorail to accommodate chain hoists that are required for stud tensioner handling. A deck is provided on the service structure to provide a work platform for servicing the CRDMs. This deck also provides the support for the CRDM cooling water manifolds and electrical cables. The deck is composed of individual butted plates with openings to accept seismic clamps provided with the CRDMs. These seismic plates provide stability for the upper portion of the CRDM. They are field-aligned to the reactor vessel control rod nozzles

Additional components that are located above the RVP head and below the missile shield within the refueling canal include the RPV head vent line piping, CRDM cabling, cooling water piping for CRDM thermal barriers, and miscellaneous electrical power cables.

The elevations for the Reactor Coolant System (RCS), including the top of the CRD Closure Housings at the top of the service structure, are shown in the attached Figure 1 and Figure 2. The top of the missile shield over the service structure is at elevation 653'0". The missile shield is comprised of six concrete removable panels, each 31' 5" x 6' 6" x 3'. It spans the refueling canal and is supported on both sides by the Steam Generator "D-Ring" walls.

NRC Bulletin Request Item 2:

> If your plant has previously experienced either leakage from or cracking in VHP nozzles, addressees are requested to provide the following information: [a, b, c, d]

Response:

The DBNPS has not previously identified either leakage from or cracking of its RPV head penetration nozzles.

NRC Bulletin Request Item 3.a:

> If the susceptibility ranking for your plant is within 5 EFPY of ONS3, addressees are requested to provide the following information:
>
> a. your plans for future inspections (type, scope, qualification requirements, and acceptance criteria) and the schedule.

Response:

The DBNPS plans for future inspections consist of the following:

1. A qualified visual examination of the RPV head will be performed during 13RFO, which is currently scheduled for April 2002.

Visual examinations have been performed during each refueling outage and reviewed by the engineering staff. For the 13RFO, a qualified visual examination will be performed. Personnel performing this task will be instructed on the type of unacceptable conditions using ONS3 as the basis. Inspections will be performed in accordance with a procedure developed specifically for these examinations that will meet the basic requirements of an ASME VT-2 inspection. The previous inspection video of the cleaned head will be used to help determine any unacceptable conditions. The RPV head will be cleaned (as necessary) and videotaped prior to return to service to re-establish a baseline for future inspections.

The acceptance criteria to be used will consist of comparative evaluations of any as-found boric acid crystal deposits to photographs of leaking CRDM nozzles observed at ONS3 and Arkansas Nuclear One-Unit 1 (ANO-1) and evaluation against any identified leaking CRDM nozzle flanges. The cracks leading to the leak characterized by supplemental examination and the nozzle will be repaired.

Because there are significant efforts being undertaken by the MRP and the nuclear industry to better understand this phenomena and to develop optimized inspections methods (including tooling), mitigation and repair techniques, the foregoing is an interim response to NRC Bulletin Request 3.a reflecting the current plans based on information currently available. The FirstEnergy Nuclear Operating Company (FENOC) proposes to provide a final response to NRC Bulletin Request 3.a by January 29, 2002 (60 days before the start of 13RFO scheduled for the spring of 2002). Final plans will be based on the inspection results from other facilities, the ongoing work of the MRP, and the advancement of Non-Destructive Examination (NDE) technology and development of remote tooling adequate to perform effective and timely surface or volumetric examinations from underneath the RVP head.

A flow chart of the inspection plan is shown in Figure 3. Details of the inspection plan will be developed prior to the 13RFO.

2. Qualified visual examinations will continue to be performed at subsequent refueling outages.

The DBNPS will continue to perform qualified visual examinations of the RPV head for evidence of leaking CRDM nozzles at subsequent refueling outages. The visual examination procedure will be updated, as required, to include industry experience.

NRC Bulletin Request Item 3.b:

Your basis for concluding that the inspections identified in 3.a. will assure that regulatory requirements are met (see Applicable Regulatory Requirements section). Include the following specific information in this discussion:

(1) If your future inspection plans do not include performing inspections before December 31, 2001, provide your basis for concluding that the regulatory requirements discussed in

the Applicable Regulatory Requirements section will continue to be met until the inspections are performed.

(2) If your future inspection plans include only visual inspections, discuss the corrective actions that will be taken, including alternative inspection methods (for example, volumetric examination), if leakage is detected.

Response:

The DBNPS is similar in design to ONS3 and ANO-1, which have demonstrated an ability to identify leaking CRDM nozzles by visual inspection for boric acid crystal deposits. The DBNPS fabrication records were reviewed to determine how CRDM bores were machined and how CRDM nozzles were installed. CRDM nozzles were installed in the RPV closure head with a designed 0.0005 inches to 0.0015 inches of diametral interference (documented in "Safety Evaluation for B&W-Design Reactor Vessel Head Control Rod Drive Mechanism Nozzle Cracking," BAW-10190P, dated May 1993). The CRDM nozzle shaft diameter is custom ground to 0.001 inches greater than the final diameter of the associated CRDM bore with a 32AA finish. A general description of the CRDM bores machining is as follows:

- Rough machine CRDM bores (Note: DBNPS RPV head penetrations were not counterbored.)
- Final heat treatment of RV closure head
- Finish machine CRDM bores to a 250 finish

A general description of the CRDM nozzle installation is as follows:

- Cool CRDM nozzles in liquid nitrogen to -140°F minimum
- Install CRDM nozzle in specified location
- Allow CRDM nozzle to warm to 70°F

During the final Quality Assurance inspection, CRDM bores were inspected for final top and bottom bore diameter and verticality. After individual CRDM nozzle shaft custom grinding to approximately 0.001 inches greater in diameter than the final CRDM bore diameter, CRDM nozzle shafts were also measured at both the top and the bottom of the custom ground length. CRDM nozzle shafts are longer than CRDM bores are deep. Thus, CRDM nozzle shaft diameter measurements do not directly line up with CRDM bore diameter measurements, although in the case of the DBNPS these locations should be fairly close because of the lack of counterbores. Therefore, the resulting top and bottom dimensional fits are considered approximate. The values for the DBNPS RPV head are calculated to range from a maximum interference fit of 0.0021 inches to a gap of 0.0010 inches.

In 1993, the B&WOG performed a safety evaluation for CRDM nozzle cracking (reference: previously cited BAW-10190P). In this evaluation, a 3D finite element model of all major components of a hillside CRDM nozzle-to-head welded structure was constructed. The B&WOG calculation includes the maximum 0.010 inch diametric counterbore at the top and

bottom locations (typical for most B&WOG plant designs), which tends to increase the stresses in the nozzle and is bounding for the DBNPS. During operation, an interference fit is calculated to release to become a gap due to temperature and pressure dilation, which provides a leak path for a through-wall crack that allows detection by visual inspection. The B&WOG calculation assumes a nominal 0.001 inch interference fit, which will open to a maximum gap of 0.0033 inches during operation.

As noted earlier, leakage from this gap has been demonstrated at both ONS and ANO-1, for which interference fits of up to 0.0014 inches have been calculated from the final QA inspection data (as documented in MRP-44, Part 2). Figure 4 provides a graphical representation of these data. The largest interference fit at the DBNPS occurs on nozzle number 50 which, as stated previously, has been calculated at 0.0021 inches at the top. This same nozzle also has an interference fit of 0.0010 inches at the bottom. Thus, the 0.0033 inch gap during operation would be somewhat less for the DBNPS, assuming the 0.0021 inch interference fit (instead of the nominal 0.001-inch). This gap would still be expected to provide a leak path to the top of the RPV head in the event of a cracked CRDM nozzle or J-groove weld. The DBNPS has not observed any leakage from these paths during its past inspection activities.

The DBNPS plans to perform inspections of the RPV head and CRDM nozzles as recommended by MRP-48. The inspections will consist of qualified visual inspections of the top RPV head bare metal surface at the 13RFO scheduled for the spring of 2002. If any leaks are detected, the source will be determined, the cracks leading to the leak characterized by supplemental examination and the nozzle will be repaired.

As stated previously, because there are significant efforts being undertaken by the MRP and the nuclear industry to better understand this phenomena and to develop optimized inspections methods (including tooling), mitigation and repair techniques, the foregoing is an interim response reflecting the current plans based on information currently available. The FENOC proposes to provide a final response by January 29, 2002 (60 days before the start of 13RFO scheduled for the spring of 2002). Final plans will be based on the inspection results from other facilities, the ongoing work of the MRP, and the advancement of NDE technology and development of remote tooling adequate to perform effective and timely surface or volumetric examinations from underneath the RVP head.

The Applicable Regulatory Requirements section of the Bulletin lists the following regulatory requirements and plant commitments as providing the basis for the Bulletin assessment:

- Appendix A to 10 CFR 50, "General Design Criteria for Nuclear Power Plants"

  Criterion 14 – "Reactor Coolant Pressure Boundary"

  Criterion 31 – "Fracture Prevention of Reactor Coolant Boundary," and

  Criterion 32 – "Inspection of Reactor Coolant Pressure Boundary"

- Plant Technical Specifications

- 10 CFR 50.55a, Codes and Standards, which incorporates by reference Section XI, "Rules for Inservice Inspection of Nuclear Power Plant Components, of the ASME Boiler and Pressure Vessel Code"

- Appendix B of 10 CFR 50, "Quality Assurance Criteria for Nuclear Power Plants and Fuel Reprocessing Plants," Criteria V, "Instructions, Procedures, and Drawings;" IX, "Control of Special Processes;" and XVI, "Corrective Actions"

The following addresses each of these criteria and demonstrates that the criteria will be met for the DBNPS until the inspections are performed.

Design Requirements: 10 CFR 50, Appendix A – General Design Requirements

The Bulletin states:

"The applicable GDC [General Design Criteria] include GDC 14, GDC 31, and GDC 32. GDC 14 specifies that the reactor coolant pressure boundary (RCPB) have an extremely low probability of abnormal leakage, of rapidly propagating failure, and of gross rupture; the presence of cracked and leaking VHP nozzles is not consistent with this GDC. GDC 31 specifies that the probability of rapidly propagating fracture of the RCPB be minimized; the presence of cracked and leaking VHP nozzles is not consistent with this GDC. GDC 32 specifies that components which are part of the RCPB have the capability of being periodically inspected to assess their structural and leaktight integrity; inspection practices that do not permit reliable detection of VHP nozzle cracking are not consistent with this GDC."
These referenced criteria state the following:

- Criterion 14 – Reactor Coolant Pressure Boundary
  "The reactor coolant pressure boundary shall be designed, fabricated, erected and tested so as to have an extremely low probability of abnormal leakage, of rapidly propagating failure, and of gross rupture."

- Criterion 31 – Fracture Prevention of Reactor Coolant Pressure Boundary
  "The reactor coolant pressure boundary shall be designed with sufficient margin to assure that when stressed under operating, maintenance, testing, and postulated accident conditions (1) the boundary behaves in a non-brittle manner, and (2) the probability of rapidly propagating fracture is minimized. The design shall reflect consideration of service temperatures and other conditions of the boundary material under operating, maintenance, testing and postulated accident conditions and the uncertainties in determining (1) material properties, (2) the effects of irradiation on material properties, (3) residual, steady state and transient stresses, and (4) size of flaws."

- Criterion 32 – Inspection of Reactor Coolant Pressure Boundary
  "Components which are part of the reactor coolant pressure boundary shall be designed to permit (1) periodic inspection and testing of important areas and features to assess their structural and leak tight integrity, and (2) an appropriate material surveillance program for the reactor pressure vessel."

During initial licensing of the DBNPS it was demonstrated that the design of the reactor coolant pressure boundary met the requirements in place at that time. The GDC included in Appendix A to 10 CFR 50 did not become effective until May 21, 1971. The construction permit for the DBNPS was issued prior to May 21, 1971; consequently, the DBNPS was not subject to the GDC requirements (reference: SECY-92-223; 9/18/92). However, the following demonstrates compliance with the design criteria for the RPV head nozzles.

- Pressurized water reactors licensed both before and after issuance of Appendix A to Part 50 (1971) complied with these criteria in part by: 1) selecting Alloy 600, and other austenitic materials with excellent corrosion resistance and extremely high fracture toughness, for reactor coolant pressure boundary materials, and 2) following ASME Codes and Standards and other applicable requirements for fabrication, erection, and testing of the pressure boundary parts. NRC reviews of operating license submittals subsequent to issuance of Appendix A included evaluating designs for compliance with the General Design Criteria.
- Although stress corrosion cracking of primary coolant system penetrations was not originally anticipated during plant design, it has occurred in the RPV top head nozzles at some plants. The suitability of the originally selected materials has been confirmed. The robustness of the design has been demonstrated by the small amounts of the leakage that has occurred and by the fact that none of the cracks in Alloy 600 reactor coolant pressure boundary materials has rapidly propagated or resulted in catastrophic failure or gross rupture. Given the inherently high fracture toughness and flaw tolerance of the Alloy 600 material there is indeed an extremely low probability of a rapidly propagating failure and gross rupture. It should be noted that the earlier versions of the GDCs are in terms of extremely low probability of gross rupture or <u>significant</u> leakage throughout the design life.
- Utilizing the conservative time-at-temperature ranking model of MRP-44, the operating time before Davis-Besse would reach an equivalent degradation time as ONS-3 is at least 3.1 EFPY.
- An updated safety assessment was performed by Framatome-ANP in April 2001 to address the CRDM nozzle cracking observed at ONS-1, ONS-3, and ANO-1. Flaw growth calculations were performed, using the modified Peter Scott crack growth equation and assuming an initial flaw length of 180° around the nozzle, which indicate that it would take approximately 4 years for a through-wall flaw to grow another 25% around the circumference. This remaining ligament, which would be 25% of the original circumference, would still be sufficient to preclude gross net-section failure (nozzle ejection). This ligament satisfies primary stress limits using a safety factor of 3.
- The revised Framatome ANP safety assessment of April 2001 also concluded that simultaneous multiple CRDM nozzles will not fail and that the failure of a single CRDM

nozzle is bounded by both the LOCA and non-LOCA plant analyses already completed to support current plant operation.

- MRP-44, Appendix C describes the accident sequence analyses already in place using the plant DBNPS Emergency Operating Procedures (EOPs). The existing EOPs provide adequate directions to mitigate any transient that would occur should there be a failure of a CRDM nozzle.
- All evidence to date suggests that it will require several years for the material to degrade to the point that total failure of the component could occur. During that time, if a crack should form, leakage of primary coolant on the RPV head can be identified through routine visual inspection of the bare RPV head. The component can then be repaired and returned to service without jeopardizing the health and safety of the public.

Therefore, the requirements established for design, fracture toughness, and inspectability in GDC 14, 31, and 32, respectively, were satisfied during the initial licensing review for the DBNPS, and continue to be satisfied during operation even in the presence of a potential for stress corrosion cracking of the RPV head penetration nozzles.

Operating Requirement: 10 CFR 50.36 - Technical Specifications

The Bulletin states:

"Plant technical specifications pertain to the issue of VHP nozzle cracking insofar as they require no through-wall reactor coolant system leakage."

10CFR 50.36 contains requirements for Plant Technical Specifications. Paragraphs 2 and 3 of 10 CFR 50.36 are particularly relevant:

- 10CFR 50.36(c)(2) Limiting Conditions for Operation

  "(i) Limiting conditions for operation are the lowest functional capability or performance levels of equipment required for safe operation of the facility. When a limiting condition for operation of a nuclear reactor is not met, the licensee shall shut down the reactor or follow any remedial action permitted by the technical specifications until the condition can be met.

  (ii) A technical specification limiting condition for operation of a nuclear reactor must be established for each item meeting one or more of the following criteria:

  (C) Criterion 3: A structure, system, or component that is part of the primary success path and which functions or actuates to mitigate a design basis accident or transient that either assumes the failure of or presents a challenge to the integrity of a fission product barrier.

  (D) Criterion 4: A structure, system, or component which operating experience or probabilistic risk assessment has shown to be significant to public health and safety."

NRC035-0695

- 10 CFR 50.36(c)(3) Surveillance Requirements

  "Surveillance requirements are requirements relating to test, calibration, or inspection to assure that the necessary quality of systems and components is maintained, that facility operation will be within safety limits, and that the limiting conditions for operation will be met."

The reactor coolant pressure boundary provides one of the critical barriers that guard against the uncontrolled release of radioactivity. Therefore, plant Technical Specifications generally include a requirement and associated action statements addressing reactor coolant pressure boundary leakage. The limits for PWR reactor coolant pressure boundary leakage are typically stated in terms of the amount of leakage, *e.g.*, 1 gallon per minute for unidentified leakage; ≤10 gpm for identified leakage; and no reactor coolant system pressure boundary leakage.

Leaks from Alloy 600 RVP head penetrations due to PWSCC have been well below the sensitivity of on-line leakage detection systems. Plants have evaluated this condition and have determined that the appropriate inspections are bare-metal visual inspections for boric acid deposits during plant shutdowns. If leakage or unacceptable indications are found, the defect must be repaired before the plant goes back on line. If through-wall boundary leaks of the CRDM nozzles increase to the point where they are detected by the on-line leak detection systems, then the leak must be evaluated per the Technical Specification's specified acceptance criteria and the Technical Specification's required actions taken

Inspection Requirements: 10 CFR 50.55a and ASME Section XI

The Bulletin states:

"NRC regulations at 10 CFR 50.55a state that ASME Class 1 components (which include VHP nozzles) must meet the requirements of Section XI of the ASME Boiler and Pressure Vessel Code. Table IWA-2500-1 [IWB-2500-1[1]] of Section XI of the ASME Code provides examination requirements for VHP nozzles and references IWB-3522 for acceptance standards. IWB-3522.1(c) and (d) specify that conditions requiring correction include the detection of leakage from insulated components and discoloration or accumulated residues on the surfaces of components, insulation, or floor areas which may reveal evidence of borated water leakage, with leakage defined as "the through-wall leakage that penetrates the pressure retaining membrane." Therefore, 10 CFR 50.55a, through its reference to the ASME Code, does not permit through-wall cracking of VHP nozzles."

"For through-wall leakage identified by visual examinations in accordance with the ASME Code, acceptance standards for the identified degradation are provided in IWB-3142.

[1] An erratum appears to exist in the Bulletin. Table IWA-2500-1 is cited, but does not exist. It appears the citation should have been IWB-2500-1.

Specifically, supplemental examination (by surface or volumetric examination), corrective measures or repairs, analytical evaluation, and replacement provide methods for determining the acceptability of degraded components."

10 CFR 50.55a requires that inservice inspection and testing be performed per the requirements of the ASME Boiler and Pressure Vessel Code, Section XI, "Inservice Inspection of Nuclear Plant Components." Section XI contains applicable rules for examination, evaluation and repair of code class components, including the reactor coolant pressure boundary.
The DBNPS performs visual inspections for evidence of leakage by examining the RPV head surface and the CRDM flanges per the requirements of NRC Generic Letter 88-05, "Boric Acid Corrosion of Carbon Steel Reactor Pressure Boundary Components in PWR Plants." If pressure boundary leakage is suspected, supplemental examinations of the affected CRDM nozzle will be performed to characterize the integrity of the nozzle. Some plants have conducted inspections beyond those required by Section XI and NRC Generic Letter 88-05. These inspections have included visual examinations of 100% of the bare metal surfaces of the RPV head; eddy current and liquid penetrant surface examinations; and supplemental examinations of the nozzles. These supplemental inspections coupled with the evaluations of cracking that has been found are considered to have provided a defense-in-depth approach for investigating and resolving this issue.

The acceptance standards are as detailed in Technical Specifications for pressure boundary leakage since the program under Generic Letter 88-05 is not a Code-required inspection program.

Flaws identified by supplemental methods will be evaluated in accordance with the flaw evaluation rules for piping contained in Section XI of the ASME Code. Any flaw not meeting the requirements for the intended service period would be repaired prior to returning it to service.

Repairs to RPV head nozzles will be performed in accordance with Section XI requirements, NRC-approved ASME Code Case requirements, or an alternative repair or replacement method approved by the NRC.

The DBNPS complies with these ASME Code requirements through implementation of the Inservice Inspection Program. In addition, additional inspections are conducted in accordance with the program developed to meet Generic Letter 88-05. If a VT-2 or qualified visual examination detects the cracks or leakage in the CRDM nozzles, corrective actions will be performed in accordance with the DBNPS corrective action program. No new plant actions are necessary to satisfy the regulatory criteria.

<u>Quality Assurance Requirements: 10 CFR 50, Appendix B</u>

The Bulletin states:

"Criterion IX of Appendix B to 10 CFR Part 50 states that special processes, including nondestructive testing, shall be controlled and accomplished by qualified personnel using qualified procedures in accordance with applicable codes, standards, specifications, criteria, and other special requirements. Within the context of providing assurance of the structural integrity of VHP nozzles, special requirements for visual examination would generally require the use of a qualified visual examination method. Such a method is one that a plant-specific analysis has demonstrated will result in sufficient leakage to the RPV head surface for a through-wall crack in a VHP nozzle, and that the resultant leakage provides a detectable deposit on the RPV head. The analysis would have to consider, for example, the as-built configuration of the VHPs and the capability to reliably detect and accurately characterize the source of the leakage, considering the presence of insulation, preexisting deposits on the RPV head, and other factors that could interfere with the detection of leakage. Similarly, special requirements for volumetric examination would generally require the use of a qualified volumetric examination method, for example, one that has a demonstrated capability to reliably detect cracking on the OD of the VHP nozzle above the J-groove weld."

The design shrink fit of the CRDM nozzles at the DBNPS is similar to the design shrink fit of the ONS units indicating that through wall cracking of the nozzles of the magnitude seen at ONS should produce visually detectable evidence of leakage on the RPV head. The qualified visual inspection and the personnel involved in the evaluation of the results will be VT-2 qualified and familiar with the anticipated type of indication that any leakage would cause. Any other NDE techniques and associated equipment that may be required is presently being developed and should be qualified for the DBNPS 13RFO in the spring of 2002.

The Bulletin further states:

"Criterion V of Appendix B to 10 CFR Part 50 states that activities affecting quality shall be prescribed by documented instructions, procedures, or drawings, of a type appropriate to the circumstances and shall be accomplished in accordance with these instructions, procedures, or drawings. Criterion V further states that instructions, procedures, or drawings shall include appropriate quantitative or qualitative acceptance criteria for determining that important activities have been satisfactorily accomplished. Visual and volumetric examinations of VHP nozzles are activities that should be documented in accordance with these requirements."

The efforts undertaken to inspect, evaluate, and /or repair the DBNPS RPV head penetrations will be conducted and documented in accordance with procedures which comply with the FENOC Quality Assurance Program and Criterion V of 10 CFR 50, Appendix B.

The final criterion cited by the Bulletin is stated as follows:

"Criterion XVI of Appendix B to 10 CFR Part 50 states that measures shall be established to assure that conditions adverse to quality are promptly identified and corrected. For significant conditions adverse to quality, the measures taken shall include root cause determination and corrective action to preclude repetition of the adverse conditions. For cracking of VHP nozzles,

the root cause determination is important to understanding the nature of the degradation present and the required actions to mitigate future cracking. These actions could include proactive inspections and repair of degraded VHP nozzles."

In addressing Criterion XVI, there are two important attributes pertinent to RPV CRDM nozzles cracking.

First, Criterion XVI states "Measures shall be established to assure that conditions adverse to quality...are promptly identified and corrected." This criterion is partially met by the DBNPS's awareness of industry experience, and has been implemented in this manner in the DBNPS corrective action program whereby industry experience is evaluated for applicability to DBNPS and the applicable corrective actions, as needed are determined. This is consistent with the NRC's generic communication process, implemented by Information Notices, which reports industry experience, but does not require a response to NRC. Licensees are expected to evaluate the applicability of the information contained in the Information Notice and document a specific assessment for possible NRC review.

Criterion XVI provides the objectives and goals of the corrective action program, but leaves to the licensee the responsibility for determining the specific process to accomplish these objectives and goals. With regard to the Bulletin response, Criterion XVI does not provide specific guidance as to what is an appropriate response, but rather, the licensee is responsible for determining actions necessary to maintain public health and safety. In this particular instance, the licensee must justify its actions for addressing the PWSCC of RPV head nozzles. Furthermore, the regulatory criteria of 10 CFR 50.109(a)(7) provides supporting evidence when it states "...if there are two or more ways to achieve compliance...then ordinarily the applicant or licensee is free to choose the way which best suits its purposes."

The second attribute of Criterion XVI stated is "In the case of significant conditions adverse to quality, the measures shall assure that the cause of the condition is determined and corrective action taken to preclude repetition." The Bulletin suggests that for RPV head nozzle cracking, the root cause determination is important to understanding the nature of the degradation and the required actions to mitigate future cracking. As part of the DBNPS corrective action program, determination of the cause of the PWSCC in the RPV head nozzles, either through the DBNPS's efforts or as part of an industry effort, would be performed, if cracks are detected.

In summary, the integrated industry approach to inspection, monitoring, cause determination, and resolution of the identified CRDM nozzle cracking is in compliance with the performance-based objectives of 10 CFR 50, Appendix B.

<u>NRC Bulletin Request Item 4:</u>

> If the susceptibility ranking for your plant is greater than 5 EFPY and less than 30 EFPY of ONS3, addressees are requested to provide the following information: [a and b]

Response:

This request does not apply to the DBNPS because the DBNPS susceptibility ranking is within 3.1 EFPY of ONS3.

NRC Bulletin Request 5:

Addressees are requested to provide the following information within 30 days after plant restart following the next refueling outage:

a. a description of the extent of VHP nozzle leakage and cracking detected at your plant, including the number, location, size, and nature of each crack detected;
b. if cracking is identified, a description of the inspections (type, scope, qualification requirements, and acceptance criteria), repairs, and other corrective actions you have taken to satisfy applicable regulatory requirements. This information is requested only if there are any changes from prior information submitted in accordance with this bulletin.

Response:

The DBNPS will provide the NRC with the following information within 30 days after plant restart following the 13th RFO scheduled to begin in the spring of 2002:

a. A description of the extent of RPV head nozzle leakage and cracking. This information will include the number, location, size and nature of each crack detected.

b. A description of the inspections (type, scope, qualification requirements, and acceptance criteria), repairs and other corrective actions taken to satisfy applicable regulatory requirements.

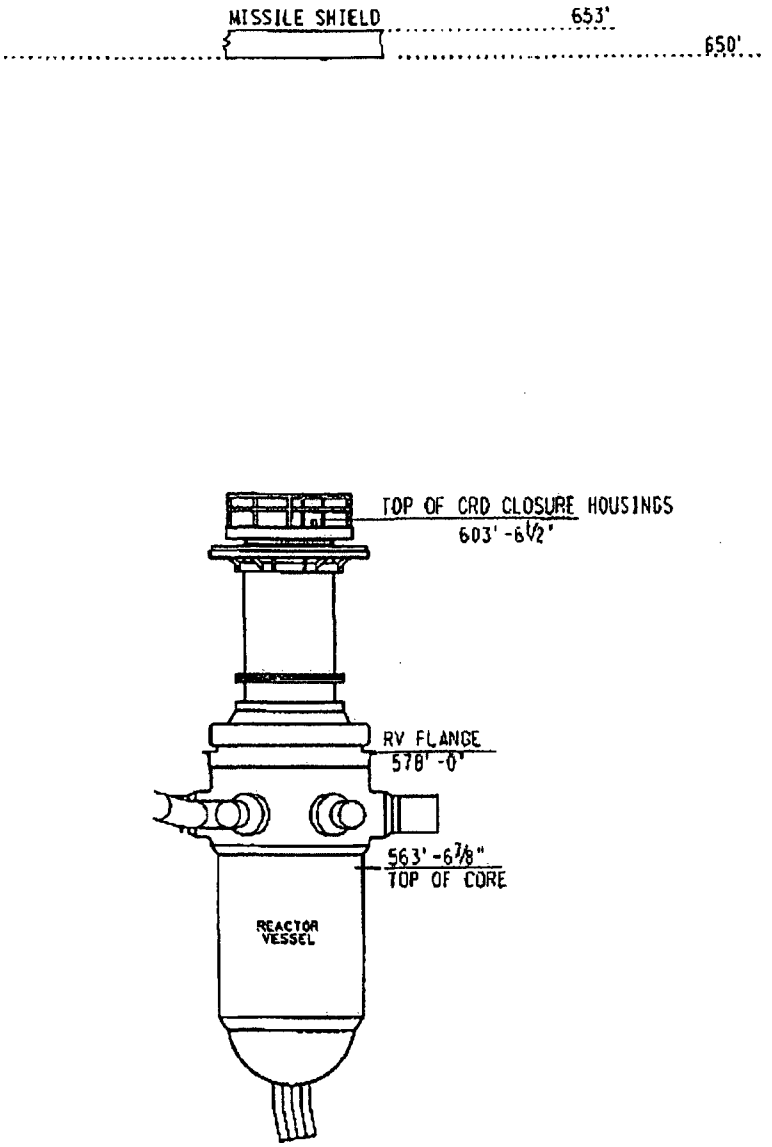

Figure 1

FE706-0702 NRC035-0701

NRC035-0701

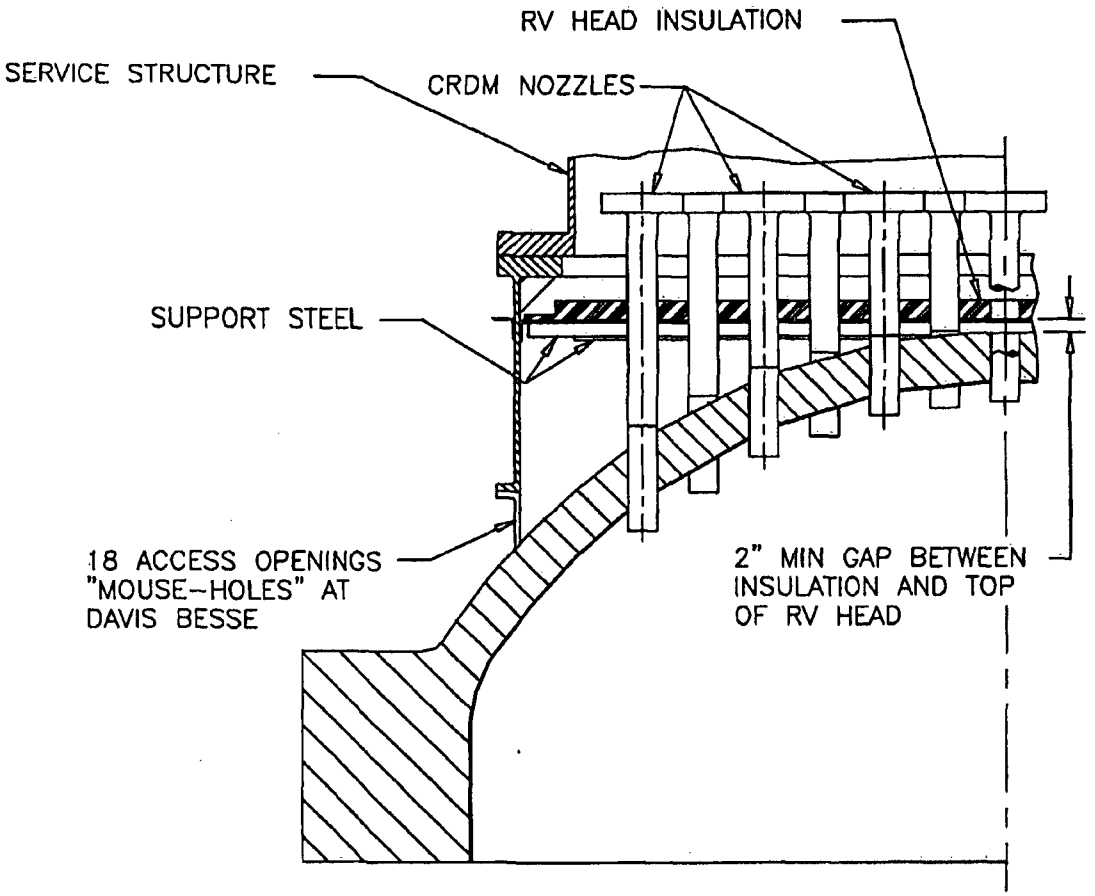

Figure 2.
Side View Schematic of Davis-Besse Reactor Vessel Head, CRDM Nozzles, and Insulation.