R. R. Sgarro
Manager-Nuclear Regulatory Affairs

PPL Bell Bend, LLC
38 Bomboy Lane, Suite 2
Berwick, PA 18603
Tel. 570.802.8102 FAX 570.802.8119
rrsgarro@pplweb.com

September 08, 2009

ATTN: Document Control Desk
U.S. Nuclear Regulatory Commission
Washington, DC 20555-0001

BELL BEND NUCLEAR POWER PLANT
RESPONSE TO RAI SET No. 33
BNP-2009-251 Docket No. 52-039

References: 1) M. Canova (NRC) to R. Sgarro (PPL Bell Bend, LLC), Bell Bend COLA – Request for Information No. 33 (RAI No. 33) – EEB-2793, email dated August 11, 2009

The purpose of this letter is to respond to the request for additional information (RAI) identified in the referenced NRC correspondence to PPL Bell Bend, LLC. This RAI addresses Onsite AC Power Systems, as discussed in Section 8.3 of the Final Safety Analysis Report (FSAR), as submitted in Part 2 of the Bell Bend Nuclear Power Plant Combined License Application (COLA).

The enclosure provides our response to RAI No. 33, Questions 08.03.01-1 and 08.03.01-2, which includes revised COLA content. A Licensing Basis Document Change Request has been initiated to incorporate this change in a future revision of the COLA. This future revision of the COLA is the only new regulatory commitment.

RAI No. 33, questions 08.03.01-3, 08.03.01-4, and 08.03.01-5 request additional information regarding Onsite AC power distribution, cable and raceway routing, and switchyard and powerblock grounding. In order to provide responses to these questions, additional refined conceptual design is required for the BBNPP site regarding onsite electrical distribution. Therefore, PPL requests additional time to prepare the information supporting the response to these questions. The responses will be provided by December 4, 2009.

Should you have questions or need additional information, please contact the undersigned at 570.802.8102.

I declare under penalty of perjury that the foregoing is true and correct.

Executed on September 08, 2009

Respectfully,

Rocco R. Sgarro

RRS/kw

Enclosure: As stated

D079
NRO

cc: (w/o Enclosures)

Mr. Samuel J. Collins
Regional Administrator
U.S. Nuclear Regulatory Commission
Region I
475 Allendale Road
King of Prussia, PA 19406-1415

Mr. Michael Canova
Project Manager
U.S. Nuclear Regulatory Commission
11545 Rockville Pike, Mail Stop T6-E55M
Rockville, MD 20852

Mr. Joseph Colaccino
Branch Chief
U.S. Nuclear Regulatory Commission
11555 Rockville Pike
Rockville, MD 20852

Enclosure 1

Response to NRC Request for Additional Information Set No. 33,
Questions 08.03.01-1 and 08.03.01-2
Bell Bend Nuclear Power Plant

RAI 33

Question 08.03.01-1

FSAR Figure 8.3-1, Emergency Power Supply System (EPSS) Single Line Diagram, appears to contain a typographical error. Clarify whether this figure shows two 30 BDT02 transformers (EATs), as labeled, or whether it should label one as 30BDT01 and the other as 30BDT02.

Response

One transformer in FSAR Figure 8.3-1, Emergency Power Supply System (EPSS) single line diagram was labeled incorrectly. The transformer numbers are 30BDT01 and 30BDT02. The transformer labels in Figure 8.3-1 will be corrected.

COLA Impact

Figure 8.3-1, Emergency Power Supply System (EPSS) single line diagram will be updated in a future revision to the COLA, as indicated.

Figure 8.3-1 {BBNPP Emergency Power Supply System Single Line Drawing}

(Page 1 of 3)

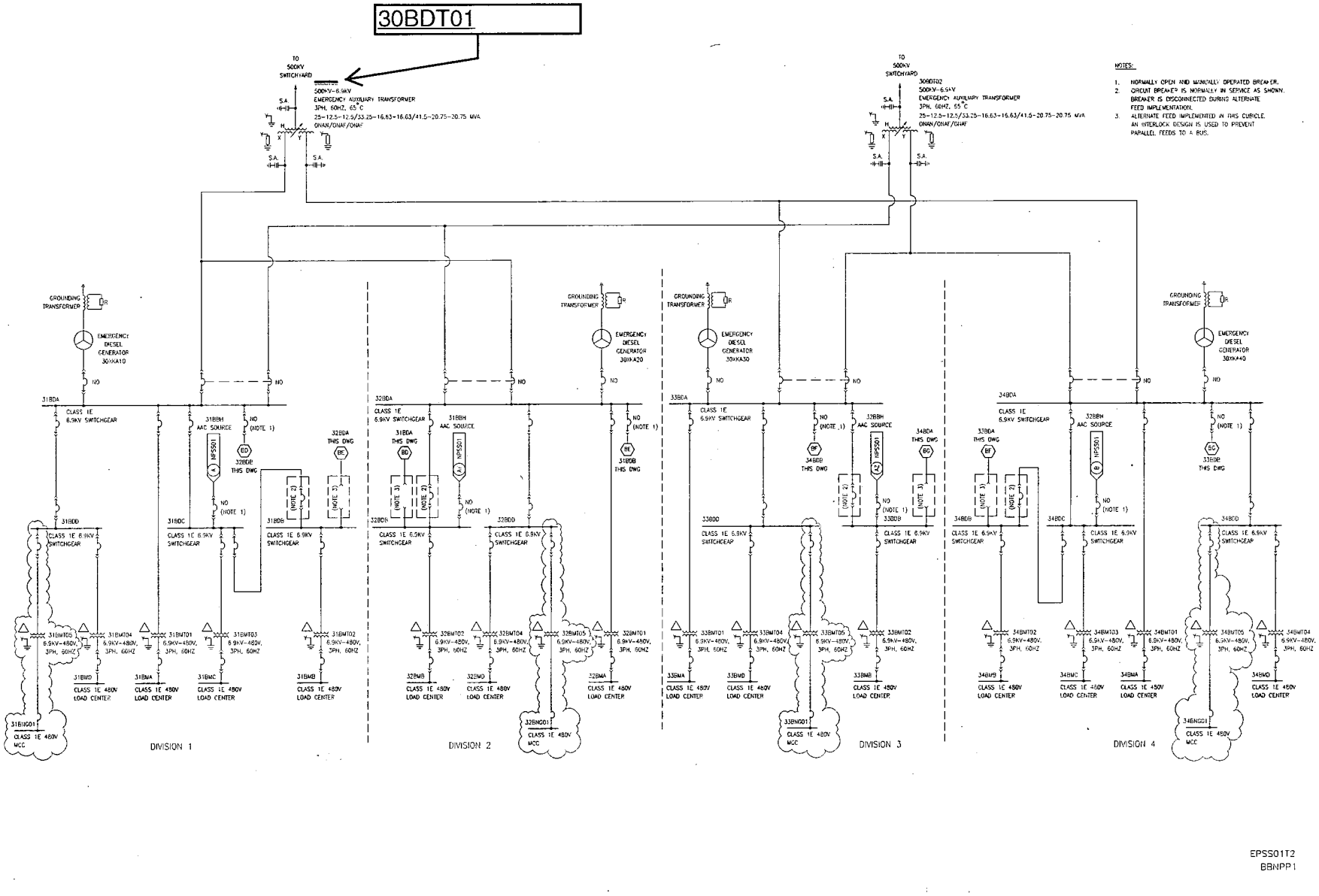

© 2008 UniStar Nuclear Services, LLC. All rights reserved.
COPYRIGHT PROTECTED

Question 08.03.01-2
FSAR Section 8.3.1.1.1, "Emergency Power Supply System," states that: "The EPSS distribution equipment for the [Essential Service Water Emergency Make-up System] ESWEMS is located in the Seismic Category ESWEMS Pumphouse."

Identify the seismic category (i.e. Seismic Category I) referred to in this section of the FSAR.

Response

The ESWEMS Pumphouse is Seismic Category I. Bell Bend FSAR Section 8.3.1.1.1 will be updated to reflect the seismic category for the ESWEMS Pumphouse.

COLA Impact

Bell Bend COLA Part 2, FSAR Section 8.3.1.1.1 will be updated in a future revision to the COLA, as indicated

8.3.1.1.1 Emergency Power Supply System

> {There are four divisions of Emergency Power Supply System (EPSS) distribution equipment for the Essential Service Water Emergency Makeup System (ESWEMS). The EPSS distribution equipment for the ESWEMS is located in the Seismic Category I ESWEMS Pumphouse. Each division is functionally independent and physically separated from the other divisions.}