WILLIAM L. BERG
President and CEO

DAIRYLAND POWER
COOPERATIVE

July 28, 2009

In reply, please refer to LAC-14071

DOCKET NO. 50-409

Document Control Desk
U.S. Nuclear Regulatory Commission
Washington, DC 20555

SUBJECT: Dairyland Power Cooperative
La Crosse Boiling Water Reactor (LACBWR)
Request for Amendment to 10 CFR 50, Possession-Only License in Support of Dry Cask Storage Project

REFERENCES:
1. LACBWR Possession-Only License No. DPR-45, Docket No. 50-409, Amendment No. 69, and Appendix A, Technical Specifications, Amendment No. 70.
2. LACBWR Decommissioning Plan, Revised December 2008.

Pursuant to 10 CFR 50.90, Dairyland Power Cooperative (DPC) requests changes to the LACBWR License Appendix A, Technical Specifications. These changes are in support of the LACBWR Dry Cask Storage Project that will establish an Independent Spent Fuel Storage Installation under general license provisions of 10 CFR 72, Subpart K. These changes are needed to accommodate efficient dry cask storage system (DCSS) loading operations and reduce occupational dose to personnel during these operations.

This request specifically seeks approval of a revised definition of FUEL HANDLING and approval of less than the currently required 16 feet of water coverage over irradiated fuel in the Fuel Element Storage Well during cask loading operations. Other less significant changes are identified and also included in this license amendment request.

Based on our evaluation, DPC concludes that the proposed amendment to the LACBWR Technical Specifications presents no significant hazards consideration under the standards set forth in 10 CFR 50.92(c), and, accordingly, a finding of "no significant hazards consideration" is justified.

DCSS loading operations are expected to begin in July 2010; therefore, we request approval of this license amendment prior to pre-loading activities that are scheduled to begin in May 2010.

NMSS01
FSME

3200 East Ave. S. • PO Box 817 • La Crosse, WI 54602-0817 • 608-787-1258 • 608-787-1469 fax • www.dairynet.com

If you have any questions regarding this license amendment request, please contact LACBWR Plant Manager Mike Brasel at (608) 689-4220.

Sincerely,

DAIRYLAND POWER COOPERATIVE

William L Berg

William L. Berg
President and CEO

WLB: BG: JBM: two

Attachments:

1. Evaluation of Proposed Changes.
2. "FESW and Cask Pool Layout Sketch," S-09-0001.
3. Allis-Chalmers Drawing No. 41-503 143, Sheet 1, "LACBWR Canal Gate and Housing."
4. Allis-Chalmers Drawing No. 41-503 143, Sheet 2, "LACBWR Canal Gate and Housing Detail."
5. Technical Specification Pages as Changed.

cc: Mr. Mark Satorius, Regional Administrator, Nuclear Regulatory Commission Region III
Ms. Kristina Banovac, NRC Project Manager

Dairyland Power Cooperative (DPC)
La Crosse Boiling Water Reactor (LACBWR)

Request for Amendment to 10 CFR 50, Possession-Only License in Support of Dry Cask Storage (DCS) Project

Attachment 1

Evaluation of Proposed Changes

I. BACKGROUND

The LACBWR Fuel Element Storage Well (FESW) contains 333 irradiated fuel assemblies in a two-tiered storage rack configuration. DPC has chosen to use the NAC-MPC storage system to move all fuel currently in wet storage in the FESW into dry storage. Each MPC-LACBWR canister is designed to store a maximum of 68 LACBWR-specific irradiated fuel assemblies. Five canisters will be required to move all spent fuel from the FESW to the Dry Cask Storage System (DCSS). Movement of individual spent fuel assemblies from the FESW to the canisters must take place under water for shielding and contamination control purposes.

The FESW north wall includes a fuel transfer canal as depicted in Reference 3. The transfer canal was previously used to move individual fuel assemblies between the reactor pressure vessel (RPV) and the FESW during refueling operations. The transfer canal includes a concrete shield plug and a watertight removable gate that allows FESW water level to be maintained above the required minimum water coverage level. The concrete shield plug and transfer canal gate are currently installed and will be removed during cask loading dry run operations involving dummy fuel assembly movements into the cask in the cask pool. The transfer canal gate will remain uninstalled for the remainder of dry runs and cask loading operations. The concrete shield plug may be set in place from time to time as required for the purpose of radiation protection.

The RPV was removed and shipped to a disposal site in June 2007. A support structure and temporary cask pool to be used for DCSS loading operations will be installed in the area where the RPV once stood. The cask pool will restore watertight integrity to the upper cavity where a portion of the cavity liner and biological shield were removed. A watertight cask pool gate, opposite the transfer canal, will be installed to allow transfer of the spent fuel canister, carried within a transfer cask, into and out of the cask pool. Once the empty canister and transfer cask are moved into the cask pool, the cask pool gate will be installed. The cask pool will be filled with water to the approximate level of water in the FESW. The transfer canal gate will then be removed, making the FESW and the cask pool hydraulically contiguous via the transfer canal opening.

Fuel assemblies to be placed in dry storage will be removed one at a time from the storage racks in the FESW and moved underwater through the transfer canal into the spent fuel canister in the cask pool. When the canister is filled with the desired number of fuel assemblies, the canister lid

will be installed underwater to provide shielding when the canister is removed from the cask pool. After canister lid installation, water level in the cask pool will be lowered and the cask pool gate removed to permit movement of the transfer cask/canister assemblage out of the cask pool and to the canister preparation area.

Changes to the LACBWR Technical Specifications (TS) discussed in the following are requested to clarify the TS with respect to DCSS operations and to facilitate DCSS operations in the most efficient way possible. The underlying intent of the changes is to reduce occupational radiation exposure incurred during canister loading and cask handling operations.

II. PROPOSED CHANGES TO APPENDIX A, TECHNICAL SPECIFICATIONS

1. Section 1: Definitions

The definition of FUEL HANDLING currently states:

> *FUEL HANDLING shall be the movement of any irradiated fuel within the Containment Building. Suspension of FUEL HANDLING shall not preclude completion of movement of the fuel to a safe, conservative position.*

DPC proposes to modify this definition to read as follows (new text in bold type):

> *FUEL HANDLING shall be the movement of* ***individual*** *irradiated fuel* ***assemblies*** *within the* ***Reactor*** *Building. Suspension of FUEL HANDLING shall not preclude completion of movement of* ***a*** *fuel* ***assembly*** *to a safe, conservative position.* ***FUEL HANDLING, for the purposes of these Technical Specifications, does not include the movement of an NRC-certified spent fuel storage canister, transfer cask, or storage cask containing irradiated fuel in accordance with the dry cask storage system's 10 CFR 72 Certificate of Compliance.***

Technical and Regulatory Basis

The intent of the first group of changes is to apply the definition of FUEL HANDLING to only the movement of individual fuel assemblies, and to correct the title of the location where DCSS loading operations will occur. The appropriate and current term, "Reactor Building," is used to clarify that containment integrity requirements are no longer applicable to the LACBWR facility. This is consistent with the terminology used in the LACBWR Decommissioning Plan (D-Plan).

The proposed new concluding sentence further clarifies the definition of FUEL HANDLING and recognizes the jurisdiction of 10 CFR 72 over DCSS loading operations. The requirements applicable to FUEL HANDLING in the LACBWR TS pertain to the shielding provided for handling of individual fuel assemblies and the potential for dropping an assembly and releasing radioactive material from the dropped assembly into the water. The definition of FUEL HANDLING is not applicable to the movement of fuel assemblies residing inside an NRC-

certified spent fuel storage canister, transfer cask, or storage cask, which is governed by the cask Certificate of Compliance (CoC) and cask Final Safety Analysis Report (FSAR).

When a spent fuel transfer cask and canister containing fuel assemblies are moved, the canister lid will be in place to provide the necessary shielding, as required by the 10 CFR 72 FSAR for the DCSS. Moreover, the transfer cask containing the canister will be lifted and moved with a single-failure-proof lifting system, making the probability of a cask drop a non-credible event. For these reasons, the LACBWR TS requirements for FUEL HANDLING do not apply to the movement of fuel assemblies within a spent fuel canister.

This last proposed change is also consistent with the requirements specified in 10 CFR 50.68(c) that state:

> *(c) While a spent fuel transportation package approved under Part 71 of this chapter or spent fuel storage cask approved under Part 72 of this chapter is in the spent fuel pool:*
>
> > *(1) The requirements in § 50.68(b) do not apply to the fuel located within that package or cask; and*
> >
> > *(2) The requirements in Part 71 or 72 of this chapter, as applicable, and the requirements of the Certificate of Compliance for that package or cask, apply to the fuel within that package or cask.*

2. Section 2: Design Features

TS 2.2.3 of Reference 1 currently states:

> *DRAINAGE*
>
> *2.2.3 The Fuel Element Storage Well is designed and shall be maintained to prevent an inadvertent draining of the well below elevation of 679 ft MSL.*

DPC proposes to modify this TS to read as follows (deleted text in strikethrough and new text in bold type):

> *DRAINAGE*
>
> *2.2.3 The Fuel Element Storage Well is designed and shall be maintained to prevent an inadvertent draining of the well below elevation of 679 ~~ft~~ **feet** MSL **when irradiated fuel assemblies are in the Fuel Element Storage Well.***

Technical and Regulatory Basis

The purpose of this change is to: 1) make an editorial change to replace an abbreviation with the full word "feet," and 2) clarify that preventing drainage of the FESW water level below 679 feet MSL is only applicable while irradiated fuel assemblies are stored in the FESW. Following

completion of transfer of all fuel assemblies to the DCSS, decontamination and dismantlement of the FESW system and components will require draining of the FESW.

The required draining of the FESW for decommissioning cannot take place with this TS in place as currently written because, without clarification, it is applicable at all times, even with no fuel in the FESW. The purpose of the current minimum water elevation requirement in the FESW is solely to protect the spent fuel and spent fuel cooling system. After all spent fuel assemblies are moved to the DCSS, the spent fuel cooling system is not required and this TS requirement need not apply.

3. Section 4/5: Performance Requirements

TS 4.1.2 of Reference 1 currently states:

4.1.2 FUEL ELEMENT STORAGE WELL

LIMITING CONDITION FOR OPERATION

The Fuel Element Storage Well (FESW) shall meet the following requirements:

a. *The Fuel Element Storage Well water level shall be at least 16 feet above any irradiated fuel stored in the spent fuel storage racks, and*

b. *Water in the storage well shall be maintained at a temperature $\leq 150^{o}F$.*

APPLICABILITY: At all times.

ACTION:

a. *With water level less than 16 feet above any irradiated fuel stored in the Fuel Element Storage Well storage racks, take immediate action to restore water level and suspend all operations involving FUEL HANDLING.*

b. *With water temperature in the storage well above $150^{o}F$, take actions to reduce water temperature to $\leq 150^{o}F$ within 24 hours and suspend any evolutions involving FUEL HANDLING.*

SURVEILLANCE REQUIREMENTS

5.1.2.1 The Fuel Element Storage Well water level and FESW System water temperature shall be monitored at least once per 24 hours.

5.1.2.2 The Fuel Element Storage Well water level indication channel shall be calibrated (CHANNEL CALIBRATION) at least once per 18 months.

DPC proposes to modify Item 'a' of this LCO, the Actions, the Applicability, and Surveillance Requirement (SR) 5.1.2.1; and add a new LCO Item 'c' to make the LCO, Actions, and SR read as follows (deleted text in strikethrough and new text in bold type):

4.1.2 FUEL ELEMENT STORAGE WELL

LIMITING CONDITION FOR OPERATION

The Fuel Element Storage Well (FESW) shall meet the following requirements:

a. ***Except under conditions described in item (c) below,*** *the Fuel Element Storage Well water level shall be at least ~~16~~* ***10*** *feet above any irradiated fuel stored in the spent fuel storage racks, and*

b. *Water in the storage well shall be maintained at a temperature ≤ 150°F,* ***and***

c. ***FESW water level may be lowered to no less than two feet, nine inches above irradiated fuel in the upper tier storage racks to permit draining of the cask pool and removal of the cask pool gate as required for cask loading operations.***

APPLICABILITY: ***While irradiated fuel assemblies are stored in the FESW.***

ACTION:

a. *With water level less than* ***required by the LCO,*** *~~16 feet above any irradiated fuel stored in the Fuel Element Storage Well storage racks~~, take immediate action to restore water level and suspend all operations involving FUEL HANDLING.*

b. *With water temperature in the storage well above 150°F, take actions to reduce water temperature to ≤ 150°F within 24 hours and suspend ~~any evolutions~~* ***all operations*** *involving FUEL HANDLING.*

SURVEILLANCE REQUIREMENTS

5.1.2.1 The Fuel Element Storage Well water level and FESW System water temperature shall be ~~monitored~~ ***verified*** *at least once per 24 hours,* ***except when pool level is lower than 10 feet above irradiated fuel pursuant to LCO 4.1.2.c. When pool level is lower than 10 feet above irradiated fuel, FESW water level shall be verified at least once per 6 hours.***

5.1.2.2 The Fuel Element Storage Well water level indication channel shall be calibrated (CHANNEL CALIBRATION) at least once per 18 months.

Technical and Regulatory Basis

a) Operational Overview

Refer to Reference 3 for the following discussion. The LACBWR FESW is 11 feet wide by 11 feet long by 42 feet deep and contains 333 fuel assemblies in a two-tiered storage rack configuration. At present, 114 fuel assemblies are stored in the upper tier racks and 219 assemblies are stored in the lower tier racks. The bottom floor of the FESW is at elevation 659'-5-5/8". The top of the active fuel in the upper tier rack is at elevation 677'-2-1/8". Normal water level in the FESW is maintained at elevation 695 feet or higher in order to comply with the 16 feet minimum water coverage of the irradiated fuel in the upper tier racks required by current TS LCO 4.1.2.a with some operating margin. The fuel transfer canal, sealed by a removable gate, is located in the FESW north wall and has a bottom elevation of 680'- 5". The transfer canal gate must be removed to move fuel assemblies from the wet storage racks to the spent fuel canister in the cask pool during cask loading operations, and during movement of dummy assemblies used for dry run training.

The transfer canal gate must be installed and verified to be watertight to maintain FESW water level above the current 16 feet minimum water coverage level of LCO 4.1.2.a. Installation of the transfer canal gate would be required each time the cask pool level is lowered to permit the transfer cask to be moved into or out of the cask pool. Transfer canal gate removal/installation operations would be required for cask handling dry runs and for the loading of the first four canisters in order to comply with the current LCO 4.1.2.a. The transfer canal gate would not be required to be installed after the fifth and last canister is loaded because all fuel assemblies will be removed from the FESW at that point.

The transfer canal gate is held in place by 65 threaded jacking bolts that compress the gate onto the sealing surface (References 4 and 5). Each bolting and unbolting operation requires use of a long-handled manual ratchet tool and takes significant time, estimated to be 6 hours, and a five person work crew. Such transfer canal gate operations would cause these personnel to incur unnecessary occupational dose if LCO 4.1.2.a. were to remain unchanged. Moreover, the fuel transfer canal gate has not been removed in 22 years, presenting a significant operational risk of not being able to obtain a watertight seal each time the gate is installed. Repairs and potential seal replacements would incur additional radiation exposure to personnel if the gate was not to seal properly after one or more reinstallations.

DPC has determined that the option having the least risk and most consistent with the ALARA philosophy is to permit FESW water level to be lowered to slightly below the elevation of the bottom of the transfer canal whenever the cask pool is drained below that level. This operation requires relief from the 16 feet minimum water coverage above irradiated fuel under specific conditions during which no work is required in, or above the FESW. Once a spent fuel canister and transfer cask have been moved into the cask pool and the cask pool gate installed, the cask pool and FESW can be filled to a higher level as required for fuel assembly movement through the transfer canal opening. A more detailed discussion of the need for the proposed changes and justification for their acceptability is provided below.

b) Proposed Changes to TS LCO 4.1.2.a

TS LCO 4.1.2.a is proposed to be changed to reduce the 16 feet minimum water coverage requirement over irradiated fuel to 10 feet of water coverage.

The current 16 feet minimum water coverage LCO requires FESW water level to be maintained at or above elevation 693'-2-1/8" with fuel in the upper tier racks, and elevation 684'-2-1/2" with all fuel in the lower tier racks. Both of these water coverage elevations are above the 680'-5" elevation of the bottom of the transfer canal, necessitating the installation of the transfer canal gate to meet the current LCO. DPC proposes to reduce the 16 feet minimum water coverage over irradiated fuel to 10 feet. The 10 feet water coverage LCO would result in a minimum required FESW water level 687'-2-1/8" with any fuel in the upper tier racks and 678'-2-1/2" with all fuel in the lower tier racks.

Because the 10 feet water coverage requirement with fuel in the upper tier racks would still result in a minimum required water level above the bottom elevation of the transfer canal, a limited exception to the revised LCO 4.1.2.a. is also requested in a proposed new LCO 4.1.2.c. (described in more detail in Section 'c' below). This exception would allow reduced water level coverage for times limited in duration with fuel in the upper tier racks, making it possible to avoid having to install the transfer canal gate at any time during dry run training activities in the cask pool through actual cask loading operations. With all fuel in the lower tier racks, the minimum required water coverage of 10 feet per revised LCO 4.1.2.a. would be below the transfer canal bottom elevation and permit the transfer canal gate to remain uninstalled for the remainder of cask loading operations. The 10 feet water coverage limit provides adequate shielding for personnel as discussed in more detail below.

It is noted that during individual fuel assembly movements through the transfer canal, existing TS 4.1.1.2, under "General Fuel Storage and Handling Requirements," which will remain unchanged, requires at least 2 feet of water above the active fuel. Thus, during fuel movement through the transfer canal this TS shall require water level to be kept at approximately elevation 695 feet.

c) Proposed New TS LCO 4.1.2.c.

New LCO 4.1.2.c. proposes to permit the FESW water level to be maintained at least 2'-9" above the irradiated fuel in the upper tier storage racks, i.e., elevation 679'-11-1/8" or higher. There are currently 114 spent fuel assemblies stored in the upper tier racks. The 2'-9" minimum water coverage was chosen because recent dose rate measurements (Reference 6) and evaluations (Reference 9) show that adequate shielding is provided for the working floor with water level at the lowered elevation. Administratively, water level will be lowered, as visually verified, to slightly below the transfer canal bottom, allowing the transfer canal gate to be left uninstalled and preventing significant spillover of water into the cask pool during and after draining. It is expected that the water level would be held at approximately elevation 680'-3" during this time.

These two proposed changes are desirable and justified for the following reasons:

i. The transfer canal gate will not need to be repeatedly installed and removed, saving occupational dose and reducing the risk of mechanical failure, foreign material introduction, or an industrial accident such as personnel falling into the FESW or cask pool.

ii. There will be no personnel activities expected to be required above, in, or around the FESW while the water level is lowered.

iii. The fuel transfer bridge will be parked over the FESW during the time of lowered level to allow cask handling crane movements over the cask pool.

iv. Dose rates with the water level lowered are modestly elevated compared to normal background dose rates but are still relatively low and manageable with an appropriate ALARA plan, training, and administrative controls.

d) Proposed Change to TS 4.1.2, Applicability

The purpose of this change is to make FESW water inventory conditions applicable only during times that spent fuel assemblies are stored in the FESW. Following completion of transfer of all fuel assemblies to the DCSS, decontamination and dismantlement of the FESW system and components will require draining of the FESW. The purpose of the current TS LCO is solely to protect the spent fuel and spent fuel cooling system. After all spent fuel assemblies are moved to the DCSS, the spent fuel cooling system is not required and this LCO need not apply.

e) Proposed Changes to TS 4.1.2, Actions

Action 'a' is revised to remove the specific reference to the water level LCO value of 16 feet and refer instead to water level not meeting the LCO. This change is a conforming change required for the proposed revision to LCO 4.1.2.a and is a human factors improvement to reflect the fact that the LCO now contains different water level requirements. Action 'b' is revised to change "any evolutions" to "all operations." This change is editorial and makes the language in the two actions consistent.

f) Proposed Changes to SR 5.1.2.1

The proposed change to SR 5.1.2.1 replacing the word "monitored" with "verified" is editorial and more accurately reflects the purpose of the SR to verify that the LCO is met. The addition of a more frequent surveillance of water level when the FESW water level limit is lower than 10 feet is appropriate because any loss of inventory from the FESW during lowered water level operations would leave less time for corrective actions to be taken before the FESW cooling system is affected. Verifying FESW water level every six hour ensures that any problem causing a loss of FESW level would be detected early.

g) FESW Thermal-Hydraulic Impact

The lower minimum FESW water level slightly below elevation 680'-5" with fuel in the upper tier racks will reduce the level of water by about 15 feet and the total volume of water in the FESW by approximately 14,000 gallons. The reduction in volume will have no effect on operation of the FESW cooling system because flow rate and cooling capacity of the system remain unchanged. Decay heat of the fuel has decreased dramatically since the plant was permanently shut down more than 22 years ago; total current heat production of the irradiated fuel inventory is estimated to be approximately 12.2 kW or 41,600 BTU/hr. The lower water level with fuel in the upper tier racks ensures the suction line for the FESW cooling water pumps with centerline at elevation 679 feet remains submerged and adequate net positive suction head for the pumps is maintained.

Administrative controls will require water level to be lowered to slightly below the bottom of the transfer canal. Visual verification of water level clearing the transfer canal bottom will ensure FESW suction remains available and the FESW cooling system will continue decay heat removal uninterrupted. To avoid potential vortexing issues, the 4-inch diameter skimmer line with centerline at elevation 679'-11" will be prohibited from being used by administrative controls with the pool at lowered level (see Reference 3).

h) FESW Reactivity Impact

The FESW storage racks include B_4C/Polymer composite neutron poison plates between all adjacent fuel assemblies for criticality control. The geometry and poison loading of the fuel storage rack cells ensures the FESW is maintained sub-critical and k_{eff} in the storage well does not exceed 0.95 at any time.

Operations Procedure, OP-58-02, "Irradiated Fuel Element Storage Rack Poison Material Surveillance Program," (Reference 7) was performed in September 2008. The results of the inspection of sample poison coupons showed that the boron poison material in the fuel storage racks is performing well and will continue to meet design requirements for many more years. This surveillance program was also inspected during 2009 by NRC Region III. As documented in NRC Inspection Report 050-00409/09-01 (DNMS), it was determined that DPC properly maintained criticality control to ensure the safe wet storage of the spent fuel. Having a minimum of 2'-9" water coverage over the irradiated fuel in the top tier racks is approximately equivalent to an infinite reflector for reactivity calculations. Any reduction in water coverage below the normal water level will increase neutron leakage, and therefore, decrease the reactivity of the FESW system.

i) FESW Shielding Impact

LACBWR Special Test Procedure, STP-58-01, "Perform Radiation Survey of FESW at Canal Gate Level," (Reference 6) was performed on June 23, 2009. Dose rate readings at various underwater locations in the FESW at the transfer canal gate bottom elevation of 680'-5" were monitored. Observations ranged from 14 mRem/hr recorded in the southeast corner to 1.03 R/hr recorded in the northwest corner.

The maximum observed dose rate was extrapolated, assuming the FESW as a gamma plane source, to the working floor at elevation 701 feet to estimate the dose rate at the nearest location personnel could access. The dose rate at the working floor, with FESW water level lowered to slightly below the bottom of the transfer canal, will increase approximately 25 mRem/hr (Reference 9). General area background at the working floor around the FESW with water level at elevation 695 feet is normally 1-2 mRem/hr. Thus, the total dose rate at the working floor level over the FESW within line-of-sight of the stored fuel with water level lowered to slightly below the transfer canal bottom is estimated to be 26-27 mRem/hr. The dose rate on the working floor away from the edge of the FESW (i.e., not within line-of-site of the stored fuel) will not be increased significantly.

During the time when FESW water level is lowered to slightly below the transfer canal bottom elevation, there will be no fuel movements or other activities expected that require the presence of personnel on the working floor near or over the FESW. The fuel transfer bridge will have to be parked over the FESW to allow the cask handling crane to lift and move the transfer cask/canister assemblage into and out of the cask pool.

DPC has also considered the potential of radioactive material adhering to the FESW walls while water level is lowered and becoming airborne. DPC will mitigate this potential source of airborne contamination by installing a misting header that will be used to spray down the wall with water level lowered, as needed. Washing any loose contamination into the pool water will minimize the potential for any residual activity becoming airborne. Radiation dose rates will be observed in the area of the FESW during the entire drain down period to monitor and respond to any unexpected elevated radiation dose rates or other deleterious radiological conditions that may result from the reduction in water level.

In summary, DPC will prepare, train to, and implement a detailed ALARA-based radiological work plan addressing all aspects of the job site and conditions as they change during cask loading operations with particular focus on FESW water level management operations.

j) Accident Analysis Impact

i. Spent Fuel Handling Accident

There is no impact on the spent fuel handling accident as described in Section 9.2 of the D-Plan because no FUEL HANDLING, as defined, will occur while FESW water level is lowered to slightly below the transfer canal bottom elevation. Water coverage limits required by TS 4.1.1.2 during the movement of individual fuel assemblies from the FESW to the DCSS in the cask pool ensure that the consequences of a fuel assembly drop remain bounded by the current analysis described in the D-Plan during cask loading operations.

ii. Shipping Cask or Heavy Load Drop into FESW

There is no impact on the shipping cask or heavy load drop accident as described in Section 9.3 of the D-Plan. The accident analysis assumes there is damage to all 333 fuel assemblies stored in the FESW and the cladding of all the fuel pins ruptures. The same assumptions as those used in the spent fuel handling accident dose analysis are used in this dose analysis. No credit is taken for decontamination in the FESW water. Therefore, the level of the FESW water is not a factor in this accident analysis and the consequences of a drop of a shipping cask or heavy load into the FESW remain bounded by the current analysis described in the D-Plan. It is also noted that with water level lowered to slightly below the transfer canal bottom, there will be no heavy load movements required or permitted over the FESW. Heavy load movements during this time will take place above, in, and around the cask pool using a single-failure-proof lifting system (crane, lifting devices, and interfacing lift points) per NUREG-0612, Section 5.1.6.

iii. Loss of FESW Cooling

The potential causes of an unexpected loss of FESW cooling event remain the same as described in Section 9.4 of the D-Plan. A test conducted during July 1993 with normal water level in the FESW indicates that considerable time is available to take action with a loss of cooling. This test, as described in the D-Plan, showed that with all cooling and coolant circulation to the pool isolated, FESW water temperature increased from 80°F to only 114°F in 15.5 days. This test was terminated at 114°F to limit increasing radioactivity in the pool water. Extrapolation of the data indicated the temperature would have stabilized at approximately 150°F.

When water level is lowered to slightly below the transfer canal bottom elevation during DCSS operations, the loss of FESW cooling accident is bounded by the FESW pipe break accident described in Section 9.5 of the D-Plan. No release of contamination is associated with this event. The total heat source in the FESW is only about 12.2 kW. If water is added to the FESW, any consequences of water heat-up can be delayed or prevented. Water can be added from the Demineralized Water System or the Overhead Storage Tank. Therefore, the current description of events in Sections 9.4 and 9.5 of the D-Plan continue to be applicable and bounding.

iv. FESW Pipe Break

The FESW pipe break event occurring with FESW at the lowered levels is bounded by the event as currently described in Section 9.5 of the D-Plan. If the postulated break occurs, the lowest the FESW could drain to is approximately 679 feet. At this level all spent fuel will remain covered. Any makeup water added may run out the break, depending on the size of the break. In the vicinity of most of the FESW piping and isolation valves, the radiation dose would not be substantially increased due to the loss of water. A repair team would be able to access the break location or piping isolation valves

and either isolate the break or effect temporary repairs. FESW level could then be restored.

A pipe break in the FESW system could result in the loss of FESW cooling. The consequences from a loss of FESW cooling were discussed in the prior section. Therefore, the current description of this event in Section 9.5 of the D-Plan continues to be applicable and bounding.

v. Uncontrolled Waste Water Discharge

This event does not involve the FESW and is unaffected by the proposed changes.

vi. Loss of Offsite Power

The proposed changes in this LAR do not impact the electric power supplies or electrical distribution system for the LACBWR facility. Therefore, the current description of this event in Section 9.7 of the D-Plan continues to be applicable and bounding.

vii. Seismic Event

No credit for, or discussion of water level in the FESW is described in the description of the seismic event in Section 9.8 of the D-Plan. Therefore, the current description of this event in Section 9.8 of the D-Plan continues to be applicable and bounding.

viii. Wind and Tornado

No credit for, or discussion of water level in the FESW is described in the description of the wind and tornado event in Section 9.9 of the D-Plan. Therefore, the current description of this event in Section 9.9 of the D-Plan continues to be applicable and bounding.

III. NO SIGNIFICANT HAZARDS CONSIDERATION

DPC has evaluated whether or not a significant hazards consideration is involved with the proposed amendment for LACBWR by focusing on the three standards set forth in 10 CFR 50.92, "Issuance of Amendment," as discussed below:

1. Does the proposed amendment involve a significant increase in the probability or consequences of an accident previously evaluated?

Response: No.

The proposed change to the definition of FUEL HANDLING is an administrative clarification and does not affect the operation of the plant or the postulated accidents in any way. The proposed changes to allow lower Fuel Element Storage Well (FESW) water level limits do not

alter the manner in which individual fuel assemblies are moved or alter the design function of the FESW or any other structures, systems, and components used to ensure safe fuel storage. The total number of fuel assembly moves to the DCSS are exactly the same as that contemplated during original plant design when fuel was assumed to be transported from the plant directly to a disposal site. All of the accidents previously evaluated in the LACBWR Decommissioning Plan have been reviewed for impact as a result of the proposed water level changes. The proposed changes do not affect the plant in such a manner that the likelihood or consequences of any previously evaluated accident is increased.

Therefore, the proposed amendment does not involve a significant increase in the probability or consequences of an accident previously evaluated.

2. Does the proposed amendment create the possibility of a new or different kind of accident from any accident previously evaluated?

Response: No.

The proposed change to the definition of FUEL HANDLING is an administrative clarification and does not affect the operation of the plant in any way. The proposed changes to allow lower Fuel Element Storage Well (FESW) water level limits do not alter the manner in which individual fuel assemblies are moved; or alter the design function of the FESW or any other structures, systems, and components used to ensure safe fuel storage. All of the accidents previously evaluated in the LACBWR Decommissioning Plan have been reviewed for impact as a result of the proposed water level changes. The existing accidents remain applicable and bounding for the LACBWR facility with the proposed changes in place and do not affect the plant in such a manner that a new accident has been created.

Therefore, the proposed change does not create the possibility of a new or different kind of accident from any previously evaluated.

3. Does the proposed amendment involve a significant reduction in a margin of safety?

Response: No.

The proposed change to the definition of FUEL HANDLING is an administrative clarification and does not affect plant operation or safety margins in any way. The proposed changes to allow lower Fuel Element Storage Well (FESW) water level limits do not alter the manner in which individual fuel assemblies are moved; or alter the design function of the FESW or any other structures, systems, and components used to ensure safe fuel storage. All of the accidents previously evaluated in the LACBWR Decommissioning Plan have been reviewed for impact as a result of the proposed water level changes. The likelihood and consequences of previously evaluated accidents remain applicable and bounding with the proposed changes in place; thus, safety margins remain the same.

Therefore, the proposed change does not involve a significant reduction in a margin of safety.

Based on the above, DPC concludes that the proposed amendment to the LACBWR Technical Specifications presents no significant hazards consideration under the standards set forth in 10 CFR 50.92(c), and, accordingly, a finding of "no significant hazards consideration" is justified.

IV. REFERENCES

1. LACBWR Possession-Only License No. DPR-45, Docket No. 50-409, Amendment No. 69, and Appendix A, Technical Specifications, Amendment No. 70.

2. LACBWR Decommissioning Plan, Revised December 2008.

3. "FESW and Cask Pool Layout Sketch," S-09-0001.

4. Allis-Chalmers Drawing No. 41-503-143, Sheet 1, "LACBWR Canal Gate and Housing."

5. Allis-Chalmers Drawing No. 41-503-143, Sheet 2, "LACBWR Canal Gate and Housing Details."

6. LACBWR Special Test Procedure, STP-58-01, "Perform Radiation Survey of FESW at Canal Gate Level," Issue 0.

7. LACBWR Operations Procedure, OP-58-02, "Irradiated Fuel Element Storage Rack Poison Material Surveillance Program," Issue 12.

8. NRC Inspection Report 050-00409/09-01 (DNMS), dated May 27, 2009.

9. Memo, L. Nelson to J. McRill, dated July 1, 2009, "701' Dose Rates due to FESW Levels Being Lowered to 680'-5"."

41-503-143
SHEET 1 OF 2

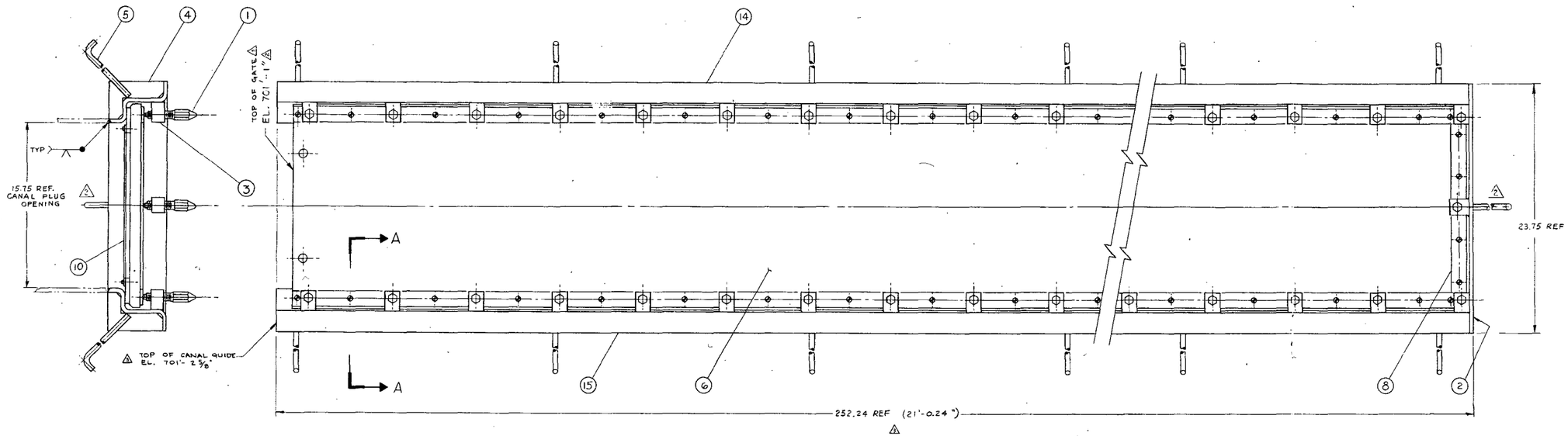

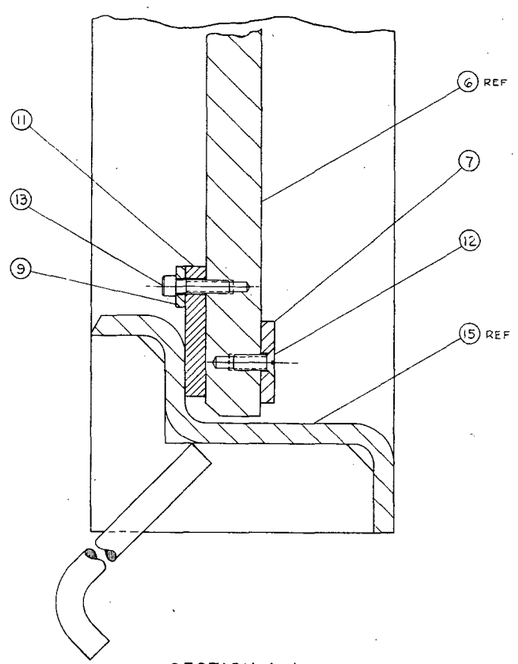

SECTION A-A
SCALE 1/1

Attachment 3

NOTES:
1. CEMENT GASKET TO GATE WITH MINN. MINING AND MFG. CO. NO. EC-1300 CLEAN ALUMINUM SEAL SURFACE WITH METHYL ETHYL KETONE BEFORE APPLYING CEMENT.
2. ALL AUSTENITIC STAINLESS STEEL SHALL BE PICKLED AND PASSIVATED AFTER WELDING.
3. ASSEMBLY SHALL BE ADEQUATELY BRACED FOR SHIPMENT TO MAINTAIN STRAIGHTNESS AND ALIGNMENT.

AS BUILT

NUMBERS SHOWN THUS (3) ARE PART NUMBERS
AND ARE PREFIXED THUS → 41-503-143-003
FOR BILL OF MATERIAL SEE BM 41-200-117

NO.	TITLE	DWG. NO.
2	FUEL TRANSFER SYSTEM ELEVATION	41-503-132
1	FUEL TRANSFER SYSTEM PLAN VIEW	41-503-131

REFERENCES

DRAWING STATUS
APPROVED FOR CONSTRUCTION

ENGINEERING SPECIFICATIONS

NEXT ASSY.	USED ON
APPLICATION	

UNLESS OTHERWISE NOTED DIMENSIONS ARE IN INCHES & MACHINING TOLERANCES ARE:
FRACTIONAL ±
DECIMAL 1 PLACE ± .060, 2 PLACE ± .030, 3 PLACE ± .010
ANGULAR ±
FINISH √
BREAK EDGES
DO NOT SCALE DWG.
SCALE: 3"=1'-0" AND NOTED

APPROVALS		DATE
DRAWN	NOLL	1-30-64
CHECKED	E. MEDAL	2-3-64
APPROVED		
APPROVED		2-5-64
APPROVED		2-6-64
APPROVED		2-6
APPROVED		
APPROVED		
APPROVED		

DWG. CLASSIFICATION

NO.	DATE	DESCRIPTION	APPD.	APPD.	APPD.
03	4-20-66	REVISED PER E/O 12100-106			
02	3-5-66	REVISED PER E/O 12100-R3			
01	2-6-64	APPD. FOR CONSTRUCTION			

REVISIONS

ALLIS-CHALMERS
MANUFACTURING COMPANY
ATOMIC ENERGY DIVISION
NUCLEAR POWER DEPARTMENT
WASHINGTON, D. C.

LACBWR
CANAL GATE AND HOUSING

DWG. NO. 41-503-143 REV. 03
SHEET 1 OF 2

41-503-143

41-503-143
SHEET 2 OF 2

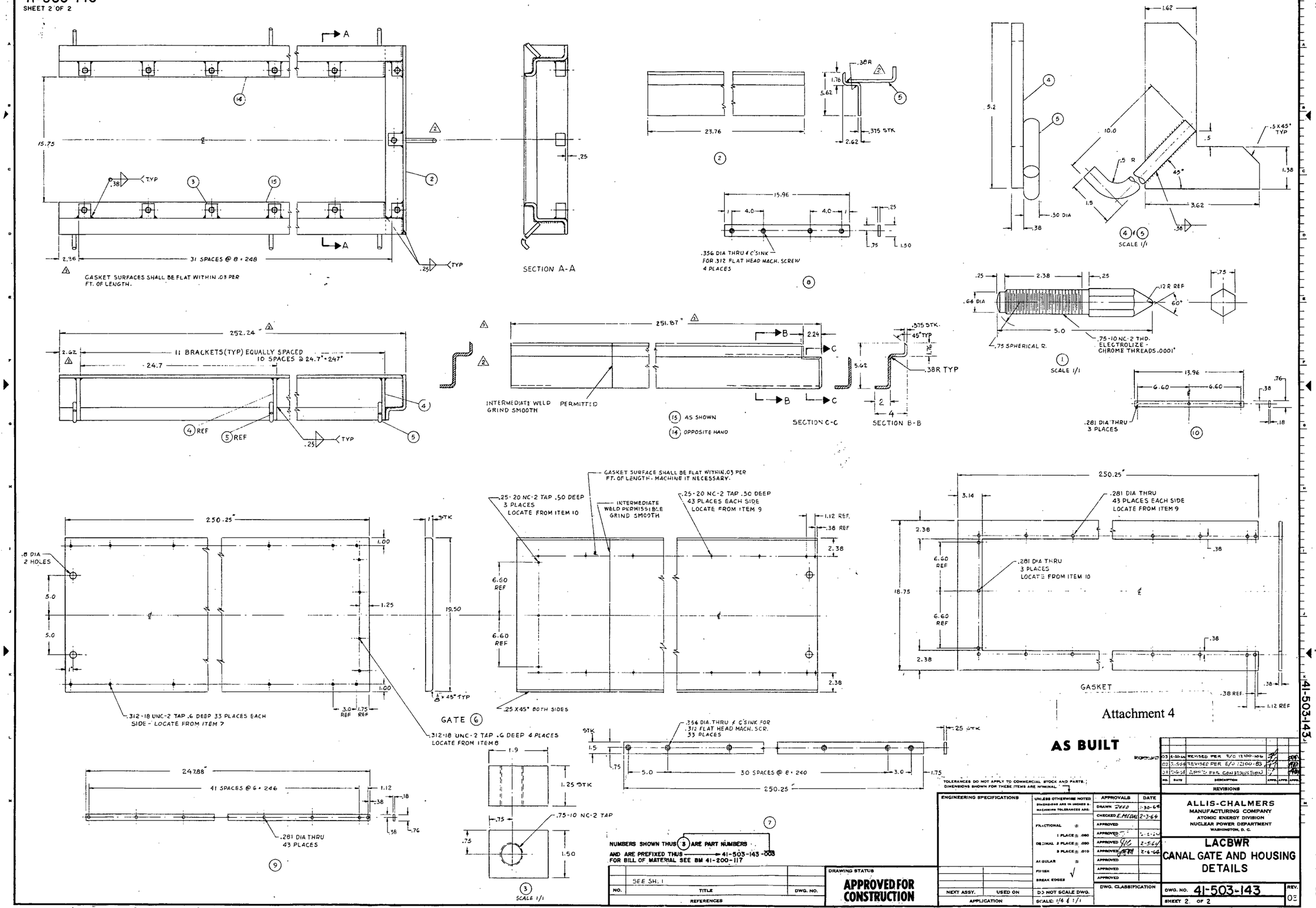

Attachment 4

41-503-143

Attachment 5

DOCKET NO. 50-409

APPENDIX A

LICENSE NO. DPR-45

LA CROSSE BOILING WATER REACTOR

TECHNICAL SPECIFICATION PAGES 1-1, 2-1, and 4/5-2

AS CHANGED FOR AMENDMENT 71

1. DEFINITIONS

The following terms are defined so that uniform interpretation of these specifications may be achieved. When these terms appear in capitalized type, the following definitions apply in these Technical Specifications.

ACTION

ACTION shall be that part of a specification which prescribes remedial measures required under designated conditions.

CHANNEL CALIBRATION

A CHANNEL CALIBRATION shall be the adjustment, as necessary, of the channel outputs such that it responds with the necessary range and accuracy to known values of the parameter which the channel monitors. The CHANNEL CALIBRATION shall encompass the entire channel including the sensor and the alarm and/or trip functions. The CHANNEL CALIBRATION may be performed by any series of sequential, overlapping or total channel steps such that the entire channel is calibrated.

FUEL HANDLING

FUEL HANDLING shall be the movement of individual irradiated fuel assemblies within the Reactor Building. Suspension of FUEL HANDLING shall not preclude completion of movement of a fuel assembly to a safe, conservative position. FUEL HANDLING, for the purposes of these Technical Specifications, does not include the movement of an NRC-certified spent fuel storage canister, transfer cask, or storage cask containing irradiated fuel in accordance with the dry cask storage system's 10 CFR 72 Certificate of Compliance.

OPERABLE-OPERABILITY

A system, subsystem, train, component or device shall be OPERABLE or have OPERABILITY when it is capable of performing its specified function(s) and when all necessary attendant instrumentation, controls, a normal or an alternate electrical power source, cooling or seal water, lubrication or other auxiliary equipment that are required for the system, subsystem, train, component or device to perform its function(s) are also capable of performing their related support function(s).

2. DESIGN FEATURES

2.1 SITE

EXCLUSION AREA

2.1.1 The exclusion area shall be as described in the Off-Site Dose Calculation Manual.

2.2 FUEL STORAGE

CRITICALITY

2.2.1 The spent fuel storage racks are designed with a nominal 7.0 inch center- to-center distance between fuel assemblies in each individual rack assembly, with a boron impregnated poison plate between adjacent storage locations to ensure K_{eff} of $\leq$ 0.95 when flooded with unborated water.

FUEL RESTRICTIONS

2.2.2 Fuel stored in the storage well is restricted to fuel with stainless steel cladding which has a U-235 loading of $\leq$ 22.6 grams per axial centimeter of fuel assembly.

DRAINAGE

2.2.3 The Fuel Element Storage Well is designed and shall be maintained to prevent an inadvertent draining of the well below an elevation of 679 feet MSL when irradiated fuel assemblies are in the Fuel Element Storage Well.

CAPACITY

2.2.4 The Fuel Element Storage Well was designed for a storage capacity of no more than 440 fuel assemblies. The maximum number of fuel assemblies stored in the Fuel Element Storage Well is limited to 333 spent fuel assemblies.

4.1.2 FUEL ELEMENT STORAGE WELL

LIMITING CONDITION FOR OPERATION

The Fuel Element Storage Well (FESW) shall meet the following requirements:

a. Except under conditions described in item (c) below, the Fuel Element Storage Well water level shall be at least 10 feet above any irradiated fuel stored in the spent fuel storage racks, and

b. Water in the storage well shall be maintained at a temperature $\leq$ 150°F, and

c. FESW water level may be lowered to no less than two feet, nine inches above irradiated fuel in the upper tier storage racks to permit draining of the cask pool and removal of the cask pool gate as required for cask loading operations.

APPLICABILITY: While irradiated fuel assemblies are stored in the FESW.

ACTION:

a. With water level less than required by the LCO, take immediate action to restore water level and suspend all operations involving FUEL HANDLING.

b. With water temperature in the storage well above 150°F, take actions to reduce water temperature to $\leq$ 150°F within 24 hours and suspend all operations involving FUEL HANDLING.

SURVEILLANCE REQUIREMENTS

5.1.2.1 The Fuel Element Storage Well water level and FESW System water temperature shall be verified at least once per 24 hours, except when pool level is lower than 10 feet above irradiated fuel pursuant to LCO 4.1.2.c. When pool level is lower than 10 feet above irradiated fuel, FESW water level shall be verified at least once per 6 hours.

5.1.2.2 The Fuel Element Storage Well water level indication channel shall be calibrated (CHANNEL CALIBRATION) at least once per 18 months.