ArevaEPRDCPEm Resource

From: WELLS Russell D (AREVA NP INC) [Russell.Wells@areva.com]
Sent: Friday, August 28, 2009 5:24 PM
To: Tesfaye, Getachew
Cc: Pederson Ronda M (AREVA NP INC); BENNETT Kathy A (OFR) (AREVA NP INC); DELANO Karen V (AREVA NP INC); SLIVA Dana (AREVA NP INC)
Subject: Response to U.S. EPR Design Certification Application RAI No. 174, FSAR Ch 9, Supplement 5
Attachments: RAI 174 Supplement 5 Response US EPR DC.pdf

Getachew,

AREVA NP Inc. provided responses to 8 of the 49 questions of RAI No. 174 on February 27, 2009. Supplement 1 response to RAI No. 174 was sent on March 13, 2009 to address 4 of the remaining 41 questions. Supplement 2 response to RAI No. 174 was sent on April 3, 2009 to address 11 of the remaining 37 questions. Supplement 3 response to RAI No. 174 was sent on May 20, 2009 to address 14 of the remaining 26 questions. Supplement 4 response to RAI No. 174 was sent on July 14, 2009 to address 11 of the remaining 12 questions.

The attached file, "RAI 174 Supplement 5 Response US EPR DC.pdf" provides a technically correct and complete response to the remaining question, as committed.

Appended to this file are affected pages of the U.S. EPR Final Safety Analysis Report in redline-strikeout format which supports the response to RAI 174 Question 09.02.02-53.

The following table indicates the respective pages in the response document, "RAI 174 Supplement 5 Response US EPR DC.pdf," that contain AREVA NP's response to the subject question.

Question #	Start Page	End Page
RAI 174 — 09.02.02-53	2	3

This concludes the formal AREVA NP response to RAI 174, and there are no questions from this RAI for which AREVA NP has not provided responses.

Sincerely,

(Russ Wells on behalf of)

Ronda Pederson
ronda.pederson@areva.com
Licensing Manager, U.S. EPR Design Certification
New Plants Deployment
AREVA NP, Inc.
An AREVA and Siemens company
3315 Old Forest Road
Lynchburg, VA 24506-0935
Phone: 434-832-3694
Cell: 434-841-8788

From: Pederson Ronda M (AREVA NP INC)
Sent: Tuesday, July 14, 2009 6:16 PM
To: 'Tesfaye, Getachew'
Cc: BENNETT Kathy A (OFR) (AREVA NP INC); DELANO Karen V (AREVA NP INC); KOWALSKI David J (AREVA NP INC)
Subject: Response to U.S. EPR Design Certification Application RAI No. 174, FSAR Ch 9, Supplement 4

Getachew,

AREVA NP Inc. provided responses to 8 of the 49 questions of RAI No. 174 on February 27, 2009. Supplement 1 response to RAI No. 174 was sent on March 13, 2009 to address 4 of the remaining questions. Supplement 2 response to RAI No. 174 was sent on April 3, 2009 to address 11 of the remaining questions. Supplement 3 response to RAI No. 174 was sent on May 20, 2009 to address 14 of the remaining questions.

The attached file, "RAI 174 Supplement 4 Response US EPR DC.pdf" provides technically correct and complete responses to 11 of the remaining 12 questions, as committed.

Appended to this file are affected pages of the U.S. EPR Final Safety Analysis Report in redline-strikeout format which supports the response to RAI 174 Questions 09.02.02-36, 09.02.02-39, 09.02.02-42, 09.02.02-45, 09.02.02-47, 09.02.02-51, 09.02.02-52, 09.02.02-54 and 09.02.02-55.

The following table indicates the respective pages in the response document, "RAI 174 Supplement 4 Response US EPR DC.pdf," that contain AREVA NP's response to the subject questions.

Question #	Start Page	End Page
RAI 174 — 09.02.02-35	2	2
RAI 174 — 09.02.02-36	3	4
RAI 174 — 09.02.02-39 (Parts f and g)	5	6
RAI 174 — 09.02.02-42	7	7
RAI 174 — 09.02.02-45	8	9
RAI 174 — 09.02.02-46	10	11
RAI 174 — 09.02.02-47	12	12
RAI 174 — 09.02.02-51	13	14
RAI 174 — 09.02.02-52	15	15
RAI 174 — 09.02.02-54	16	18
RAI 174 — 09.02.02-55	19	20

Since a response to the remaining question remains in process, a revised schedule is provided in this email. The schedule for a technically correct and complete response to the remaining question has been changed as provided below:

Question #	Response Date
RAI 174 — 09.02.02-53	August 28, 2009

Sincerely,

Ronda Pederson
ronda.pederson@areva.com
Licensing Manager, U.S. EPR Design Certification
AREVA NP Inc.
An AREVA and Siemens company
3315 Old Forest Road
Lynchburg, VA 24506-0935
Phone: 434-832-3694
Cell: 434-841-8788

From: WELLS Russell D (AREVA NP INC)
Sent: Wednesday, May 20, 2009 3:03 PM
To: 'Getachew Tesfaye'
Cc: Pederson Ronda M (AREVA NP INC); BENNETT Kathy A (OFR) (AREVA NP INC); DELANO Karen V (AREVA NP INC)
Subject: Response to U.S. EPR Design Certification Application RAI No. 174, FSAR Ch 9, Supplement 3

Getachew,

AREVA NP Inc. provided responses to 8 of the 49 questions of RAI No. 174 on February 27, 2009. Supplement 1 response to RAI No. 174 was sent on March 13, 2009 to address 4 of the remaining 41 questions. Supplement 2 response to RAI No. 174 was sent on April 3, 2009 to address 11 of the remaining 37 questions.

The attached file, "RAI 174 Supplement 3 Response US EPR DC.pdf" provides technically correct and complete responses to 14 of the remaining questions, as committed.

Appended to this file are affected pages of the U.S. EPR Final Safety Analysis Report in redline-strikeout format which supports the response to RAI 174 Questions 09.02.02-9, 09.02.02-12, 09.02.02-28, 09.02.02-29, 09.02.02-31, 09.02.02-32, 09.02.02-37, and 09.02.02-44.

The following table indicates the respective pages in the response document, "RAI 174 Supplement 3 Response US EPR DC.pdf," that contain AREVA NP's response to the subject questions.

Question #	Start Page	End Page
RAI 174 — 09.02.02-7	2	2
RAI 174 — 09.02.02-8	3	3
RAI 174 — 09.02.02-9	4	5
RAI 174 — 09.02.02-12 (Parts 6, 7 and 8)	6	10
RAI 174 — 09.02.02-20	11	12
RAI 174 — 09.02.02-28	13	14
RAI 174 — 09.02.02-29	15	16
RAI 174 — 09.02.02-31	17	21
RAI 174 — 09.02.02-32	22	26
RAI 174 — 09.02.02-37	27	27
RAI 174 — 09.02.02-38	28	28
RAI 174 — 09.02.02-43	29	29
RAI 174 — 09.02.02-44	30	30
RAI 174 — 09.02.02-48	31	31

Since responses to the remaining questions remain in process, a revised schedule is provided in this email.

The schedule for technically correct and complete responses to the remaining questions has been changed as provided below:

Question #	Response Date
RAI 174 — 09.02.02-35	July 14, 2009
RAI 174 — 09.02.02-36	July 14, 2009
RAI 174 — 09.02.02-39 (Parts f and g)	July 14, 2009
RAI 174 — 09.02.02-42	July 14, 2009
RAI 174 — 09.02.02-45	July 14, 2009
RAI 174 — 09.02.02-46	July 14, 2009
RAI 174 — 09.02.02-47	July 14, 2009

RAI 174 — 09.02.02-51	July 14, 2009
RAI 174 — 09.02.02-52	July 14, 2009
RAI 174 — 09.02.02-53	July 14, 2009
RAI 174 — 09.02.02-54	July 14, 2009
RAI 174 — 09.02.02-55	July 14, 2009

(Russ Wells on behalf of)
Ronda Pederson
ronda.pederson@areva.com
Licensing Manager, U.S. EPR Design Certification
New Plants Deployment
AREVA NP, Inc.
An AREVA and Siemens company
3315 Old Forest Road
Lynchburg, VA 24506-0935
Phone: 434-832-3694
Cell: 434-841-8788

From: Pederson Ronda M (AREVA NP INC)
Sent: Friday, April 03, 2009 5:08 PM
To: 'Getachew Tesfaye'
Cc: KOWALSKI David J (AREVA NP INC); BENNETT Kathy A (OFR) (AREVA NP INC); DELANO Karen V (AREVA NP INC)
Subject: Response to U.S. EPR Design Certification Application RAI No. 174, Supplement 2

Getachew,

AREVA NP Inc. provided responses to 8 of the 49 questions of RAI No. 174 on February 27, 2009. Supplement 1 response to RAI No. 174 was sent on March 13, 2009 to address 4 of the remaining questions.

The attached file, "RAI 174 Supplement 2 Response US EPR DC.pdf" provides technically correct and complete responses to 11 of the remaining 37 questions, as committed.

Appended to this file are affected pages of the U.S. EPR Final Safety Analysis Report in redline-strikeout format which supports the response to RAI 174 Questions 09.02.02-11, 09.02.02-16, 09.02.02-18, 09.02.02-19, 09.02.02-21, 09.02.02-23, 09.02.02-24, 09.02.02-25, 09.02.02-30 and 09.02.02-34.

The following table indicates the respective pages in the response document, "RAI 174 Supplement 2 Response US EPR DC.pdf," that contain AREVA NP's response to the subject questions.

Question #	Start Page	End Page
RAI 174 — 09.02.02-11	2	2
RAI 174 — 09.02.02-16	3	5
RAI 174 — 09.02.02-18	6	8
RAI 174 — 09.02.02-19	9	12
RAI 174 — 09.02.02-21	13	14
RAI 174 — 09.02.02-22	15	16
RAI 174 — 09.02.02-23	17	18
RAI 174 — 09.02.02-24	19	19
RAI 174 — 09.02.02-25	20	20
RAI 174 — 09.02.02-30	21	22
RAI 174 — 09.02.02-34	23	24

The schedule for a technically correct and complete response to the remaining questions is unchanged and provided below.

Question #	Response Date
RAI 174 — 09.02.02-7	May 20, 2009
RAI 174 — 09.02.02-8	May 20, 2009
RAI 174 — 09.02.02-9	May 20, 2009
RAI 174 — 09.02.02-12 (Parts 6, 7 and 8)	May 20, 2009
RAI 174 — 09.02.02-20	May 20, 2009
RAI 174 — 09.02.02-28	May 20, 2009
RAI 174 — 09.02.02-29	May 20, 2009
RAI 174 — 09.02.02-31	May 20, 2009
RAI 174 — 09.02.02-32	May 20, 2009
RAI 174 — 09.02.02-35	May 20, 2009
RAI 174 — 09.02.02-36	May 20, 2009
RAI 174 — 09.02.02-37	May 20, 2009
RAI 174 — 09.02.02-38	May 20, 2009
RAI 174 — 09.02.02-39 (Parts f and g)	May 20, 2009
RAI 174 — 09.02.02-42	May 20, 2009
RAI 174 — 09.02.02-43	May 20, 2009
RAI 174 — 09.02.02-44	May 20, 2009
RAI 174 — 09.02.02-45	May 20, 2009
RAI 174 — 09.02.02-46	May 20, 2009
RAI 174 — 09.02.02-47	May 20, 2009
RAI 174 — 09.02.02-48	May 20, 2009
RAI 174 — 09.02.02-51	May 20, 2009
RAI 174 — 09.02.02-52	May 20, 2009
RAI 174 — 09.02.02-53	May 20, 2009
RAI 174 — 09.02.02-54	May 20, 2009
RAI 174 — 09.02.02-55	May 20, 2009

Sincerely,

Ronda Pederson
ronda.pederson@areva.com
Licensing Manager, U.S. EPR Design Certification
AREVA NP Inc.
An AREVA and Siemens company
3315 Old Forest Road
Lynchburg, VA 24506-0935
Phone: 434-832-3694
Cell: 434-841-8788

From: Pederson Ronda M (AREVA NP INC)
Sent: Friday, March 13, 2009 4:56 PM
To: 'Getachew Tesfaye'
Cc: KOWALSKI David J (AREVA NP INC); DELANO Karen V (AREVA NP INC); BENNETT Kathy A (OFR) (AREVA NP INC)
Subject: Response to U.S. EPR Design Certification Application RAI No. 174, Supplement 1

Getachew,

AREVA NP Inc. provided responses to 8 of the 49 questions of RAI No. 174 on February 27, 2009. The attached file, "RAI 174 Supplement 1 Response US EPR DC.pdf" provides technically correct and complete responses to 4 of the remaining 41 questions, as committed.

The following table indicates the respective pages in the response document, "RAI 174 Supplement 1 Response US EPR DC.pdf," that contain AREVA NP's response to the subject questions.

Question #	Start Page	End Page
RAI 174 — 09.02.02-39 (Parts a though e)	2	3
RAI 174 — 09.02.02-40	4	4
RAI 174 — 09.02.02-41	5	5
RAI 174 — 09.02.02-49	6	6
RAI 174 — 09.02.02-50	7	7

The schedule for a technically correct and complete response to the remaining questions is unchanged and provided below.

Question #	Response Date
RAI 174 — 09.02.02-7	May 20, 2009
RAI 174 — 09.02.02-8	May 20, 2009
RAI 174 — 09.02.02-9	May 20, 2009
RAI 174 — 09.02.02-11	April 3, 2009
RAI 174 — 09.02.02-12 (Parts 6, 7 and 8)	May 20, 2009
RAI 174 — 09.02.02-16	April 3, 2009
RAI 174 — 09.02.02-18	April 3, 2009
RAI 174 — 09.02.02-19	May 20, 2009
RAI 174 — 09.02.02-20	May 20, 2009
RAI 174 — 09.02.02-21	May 20, 2009
RAI 174 — 09.02.02-22	April 3, 2009
RAI 174 — 09.02.02-23	May 20, 2009
RAI 174 — 09.02.02-24	May 20, 2009
RAI 174 — 09.02.02-25	April 3, 2009
RAI 174 — 09.02.02-28	May 20, 2009
RAI 174 — 09.02.02-29	May 20, 2009
RAI 174 — 09.02.02-30	April 3, 2009
RAI 174 — 09.02.02-31	May 20, 2009
RAI 174 — 09.02.02-32	May 20, 2009
RAI 174 — 09.02.02-34	May 20, 2009
RAI 174 — 09.02.02-35	May 20, 2009

RAI 174 — 09.02.02-36	May 20, 2009
RAI 174 — 09.02.02-37	May 20, 2009
RAI 174 — 09.02.02-38	May 20, 2009
RAI 174 — 09.02.02-39 (Parts f and g)	May 20, 2009
RAI 174 — 09.02.02-42	May 20, 2009
RAI 174 — 09.02.02-43	May 20, 2009
RAI 174 — 09.02.02-44	May 20, 2009
RAI 174 — 09.02.02-45	May 20, 2009
RAI 174 — 09.02.02-46	May 20, 2009
RAI 174 — 09.02.02-47	May 20, 2009
RAI 174 — 09.02.02-48	May 20, 2009
RAI 174 — 09.02.02-51	May 20, 2009
RAI 174 — 09.02.02-52	May 20, 2009
RAI 174 — 09.02.02-53	May 20, 2009
RAI 174 — 09.02.02-54	May 20, 2009
RAI 174 — 09.02.02-55	May 20, 2009

Sincerely,

Ronda Pederson
ronda.pederson@areva.com
Licensing Manager, U.S. EPR Design Certification
AREVA NP Inc.
An AREVA and Siemens company
3315 Old Forest Road
Lynchburg, VA 24506-0935
Phone: 434-832-3694
Cell: 434-841-8788

From: Pederson Ronda M (AREVA NP INC)
Sent: Friday, February 27, 2009 5:46 PM
To: 'Getachew Tesfaye'
Cc: DELANO Karen V (AREVA NP INC); BENNETT Kathy A (OFR) (AREVA NP INC); KOWALSKI David J (AREVA NP INC)
Subject: Response to U.S. EPR Design Certification Application RAI No. 174, FSAR Ch. 9

Getachew,

Attached please find AREVA NP Inc.'s response to the subject request for additional information (RAI). The attached file, "RAI 174 Response US EPR DC.pdf" provides technically correct and complete responses to 8 of the 49 questions.

Appended to this file are affected pages of the U.S. EPR Final Safety Analysis Report in redline-strikeout format which supports the response to RAI 174 Questions 09.02.02-10, 09.02.02-17 and 09.02.02-33.

The following table indicates the respective pages in the response document, "RAI 174 Response US EPR DC.pdf," that contain AREVA NP's response to the subject questions.

Question #	Start Page	End Page
RAI 174 — 09.02.02-7	2	2
RAI 174 — 09.02.02-8	3	3
RAI 174 — 09.02.02-9	4	4
RAI 174 — 09.02.02-10	5	6
RAI 174 — 09.02.02-11	7	7
RAI 174 — 09.02.02-12	8	10
RAI 174 — 09.02.02-13	11	11
RAI 174 — 09.02.02-14	12	12
RAI 174 — 09.02.02-15	13	14
RAI 174 — 09.02.02-16	15	16
RAI 174 — 09.02.02-17	17	17
RAI 174 — 09.02.02-18	18	19
RAI 174 — 09.02.02-19	20	21
RAI 174 — 09.02.02-20	22	22
RAI 174 — 09.02.02-21	23	23
RAI 174 — 09.02.02-22	24	24
RAI 174 — 09.02.02-23	25	25
RAI 174 — 09.02.02-24	26	26
RAI 174 — 09.02.02-25	27	27
RAI 174 — 09.02.02-26	28	28
RAI 174 — 09.02.02-27	29	29
RAI 174 — 09.02.02-28	30	30
RAI 174 — 09.02.02-29	31	31
RAI 174 — 09.02.02-30	32	32
RAI 174 — 09.02.02-31	33	34
RAI 174 — 09.02.02-32	35	36
RAI 174 — 09.02.02-33	37	37
RAI 174 — 09.02.02-34	38	38
RAI 174 — 09.02.02-35	39	39
RAI 174 — 09.02.02-36	40	40
RAI 174 — 09.02.02-37	41	41
RAI 174 — 09.02.02-38	42	42
RAI 174 — 09.02.02-39	43	43
RAI 174 — 09.02.02-40	44	44
RAI 174 — 09.02.02-41	45	45
RAI 174 — 09.02.02-42	46	46
RAI 174 — 09.02.02-43	47	47
RAI 174 — 09.02.02-44	48	48
RAI 174 — 09.02.02-45	49	49
RAI 174 — 09.02.02-46	50	50
RAI 174 — 09.02.02-47	51	51
RAI 174 — 09.02.02-48	52	52
RAI 174 — 09.02.02-49	53	53
RAI 174 — 09.02.02-50	54	54
RAI 174 — 09.02.02-51	55	55
RAI 174 — 09.02.02-52	56	56

RAI 174 — 09.02.02-53	57	57
RAI 174 — 09.02.02-54	58	58
RAI 174 — 09.02.02-55	59	59

A complete answer is not provided for 41 of the 49 questions. The schedule for a technically correct and complete response to these questions is provided below.

Question #	**Response Date**
RAI 174 — 09.02.02-7	May 20, 2009
RAI 174 — 09.02.02-8	May 20, 2009
RAI 174 — 09.02.02-9	May 20, 2009
RAI 174 — 09.02.02-11	April 3, 2009
RAI 174 — 09.02.02-12 (Parts 6, 7 and 8)	May 20, 2009
RAI 174 — 09.02.02-16	April 3, 2009
RAI 174 — 09.02.02-18	April 3, 2009
RAI 174 — 09.02.02-19	May 20, 2009
RAI 174 — 09.02.02-20	May 20, 2009
RAI 174 — 09.02.02-21	May 20, 2009
RAI 174 — 09.02.02-22	April 3, 2009
RAI 174 — 09.02.02-23	May 20, 2009
RAI 174 — 09.02.02-24	May 20, 2009
RAI 174 — 09.02.02-25	April 3, 2009
RAI 174 — 09.02.02-28	May 20, 2009
RAI 174 — 09.02.02-29	May 20, 2009
RAI 174 — 09.02.02-30	April 3, 2009
RAI 174 — 09.02.02-31	May 20, 2009
RAI 174 — 09.02.02-32	May 20, 2009
RAI 174 — 09.02.02-34	May 20, 2009
RAI 174 — 09.02.02-35	May 20, 2009
RAI 174 — 09.02.02-36	May 20, 2009
RAI 174 — 09.02.02-37	May 20, 2009
RAI 174 — 09.02.02-38	May 20, 2009
RAI 174 — 09.02.02-39 (Parts a though e) RAI 174 — 09.02.02-39 (Parts f and g)	March 13, 2009 May 20, 2009
RAI 174 — 09.02.02-40	March 13, 2009
RAI 174 — 09.02.02-41	March 13, 2009
RAI 174 — 09.02.02-42	May 20, 2009
RAI 174 — 09.02.02-43	May 20, 2009
RAI 174 — 09.02.02-44	May 20, 2009
RAI 174 — 09.02.02-45	May 20, 2009
RAI 174 — 09.02.02-46	May 20, 2009
RAI 174 — 09.02.02-47	May 20, 2009
RAI 174 — 09.02.02-48	May 20, 2009
RAI 174 — 09.02.02-49	March 13, 2009
RAI 174 — 09.02.02-50	March 13, 2009

RAI 174 — 09.02.02-51	May 20, 2009
RAI 174 — 09.02.02-52	May 20, 2009
RAI 174 — 09.02.02-53	May 20, 2009
RAI 174 — 09.02.02-54	May 20, 2009
RAI 174 — 09.02.02-55	May 20, 2009

Sincerely,

Ronda Pederson
ronda.pederson@areva.com
Licensing Manager, U.S. EPR Design Certification
AREVA NP Inc.
An AREVA and Siemens company
3315 Old Forest Road
Lynchburg, VA 24506-0935
Phone: 434-832-3694
Cell: 434-841-8788

From: Getachew Tesfaye [mailto:Getachew.Tesfaye@nrc.gov]
Sent: Wednesday, January 28, 2009 3:56 PM
To: ZZ-DL-A-USEPR-DL
Cc: Larry Wheeler; John Segala; Peter Wilson; Peter Hearn; Joseph Colaccino; Michael Miernicki; Meena Khanna; ArevaEPRDCPEm Resource
Subject: U.S. EPR Design Certification Application RAI No. 174 (1806, 1810),FSAR Ch. 9

Attached please find the subject requests for additional information (RAI). A draft of the RAI was provided to you on January 9, 2009, and discussed with your staff on January 22, 2009. No changes were made to the draft RAI as a result of that discussion. The schedule we have established for review of your application assumes technically correct and complete responses within 30 days of receipt of RAIs. For any RAIs that cannot be answered within 30 days, it is expected that a date for receipt of this information will be provided to the staff within the 30 day period so that the staff can assess how this information will impact the published schedule.

Thanks,
Getachew Tesfaye
Sr. Project Manager
NRO/DNRL/NARP
(301) 415-3361

Hearing Identifier: AREVA_EPR_DC_RAIs
Email Number: 772

Mail Envelope Properties (1F1CC1BBDC66B842A46CAC03D6B1CD4101DFC0B7)

Subject: Response to U.S. EPR Design Certification Application RAI No. 174, FSAR Ch 9, Supplement 5
Sent Date: 8/28/2009 5:24:09 PM
Received Date: 8/28/2009 5:24:15 PM
From: WELLS Russell D (AREVA NP INC)

Created By: Russell.Wells@areva.com

Recipients:
"Pederson Ronda M (AREVA NP INC)" <Ronda.Pederson@areva.com>
Tracking Status: None
"BENNETT Kathy A (OFR) (AREVA NP INC)" <Kathy.Bennett@areva.com>
Tracking Status: None
"DELANO Karen V (AREVA NP INC)" <Karen.Delano@areva.com>
Tracking Status: None
"SLIVA Dana (AREVA NP INC)" <Dana.Sliva@areva.com>
Tracking Status: None
"Tesfaye, Getachew" <Getachew.Tesfaye@nrc.gov>
Tracking Status: None

Post Office: AUSLYNCMX02.adom.ad.corp

Files	**Size**	**Date & Time**
MESSAGE	19796	8/28/2009 5:24:15 PM
RAI 174 Supplement 5 Response US EPR DC.pdf		824683

Options
Priority: Standard
Return Notification: No
Reply Requested: No
Sensitivity: Normal
Expiration Date:
Recipients Received:

Response to

Request for Additional Information No. 174, Supplement 5

01/28/2009

U. S. EPR Standard Design Certification
AREVA NP Inc.
Docket No. 52-020
SRP Section: 09.02.02 - Reactor Auxiliary Cooling Water Systems
Application Section: 9.2.2

QUESTIONS for Balance of Plant Branch 1 (AP1000/EPR Projects) (SBPA)

Question 09.02.02-53:

Standard Review Plan (SRP) Section 9.2.2, which is being utilized as guidance for review of the safety chilled water system (SCWS), specifies in Section III confirmation of the overall arrangement of the component cooling system (CCWS). Final Safety Analysis Report (FSAR) Tier 2 Section 9.2.8.4 states that the four-train design fulfills the single-failure criteria, with the redundant trains strictly separated into four divisions. The four-train design supports one train unavailable for maintenance and one train unavailable due to single failure under accident conditions, which leaves two 100 percent trains available to mitigate the postulated accident. However, this is not consistent with Technical Specification (TS 3.7.9) which requires the plant to be in hot shutdown 6 hours after a 72-hour period with one train inoperable or not operating. The basis for the 72-hour limiting condition for operation states that in this condition (one train not available), a single-failure in one of the operable emergency service water trains could cause the loss of safety chilled water system function.

a. Describe the basis upon which the chilled water trains are considered to be 100 percent trains. Note: TS Basis 3.7.9 states that the chiller compressor unit for each safety chilled water train contains three 50% compressors. This configuration is not indicated in Section 9.2.8.

In reviewing technical specifications for the chilled water users (like control room or safeguard building ventilation), it appears that the 72-hour limiting-condition-for-operation (LCO) mentioned above is related to the Safeguard Building Ventilation System Electrical Division (3.7.13), which also has a 72-hour LCO for one train inoperable. The basis for TS 3.7.13 states that with one train inoperable, the remaining 3 trains are sufficient to maintain the 3 remaining safeguard buildings within required temperature limits. The basis also states that a non-safety-related maintenance train is available to cool the 4th building. However, a loss of offsite power would result in loss of the maintenance train function since it does not have emergency backup power available.

b. Similar to the above, describe why this results in a 72 hour LCO.

Response to Question 09.02.02-53:

a. The SCWS has been modified to improve the reliability of the SCWS and enhance the serviceability of the SCWS chiller packages. Cross-ties have been added to the SCWS, which interconnect the supply and return piping of Train 1 with Train 2, and the supply and return piping of Train 3 with Train 4.

   Each cross-tie includes motor-operated isolation valves and associated controls and interlocks. There are two motor-operated isolation valves per division (i.e., one supply and one return), which are located in their respective Safeguard Building. The valves are divisionally-powered. During normal plant operation, the cross-tie isolation valves (i.e., supply and return piping for both trains) are normally open, with one operating SCWS chiller sized to meet the system load requirements of both divisional trains. Following a design basis accident, the system will accommodate operation as independent divisional trains with the cross-tie valves closed for an extended period.

   The following portions of the U.S. EPR FSAR will be revised to reflect the modified SCWS design:

- U.S. EPR FSAR Tier 1, Section 2.7.2.
- U.S. EPR FSAR Tier 1, Table 2.7.2-1—Safety Chilled Water System Equipment Mechanical Design, Table 2.7.2-2—Safety Chilled Water System Equipment I&C and Electrical Design, and Table 2.7.2-3—Safety Chilled Water System ITAAC.
- U.S. EPR FSAR Tier 1, Figure 2.7.2-1—Safety Chilled Water System Functional Arrangement, Sheets 1 through 4.
- U.S. EPR FSAR Tier 2, Table 3.10-1—List of Seismically and Dynamically Qualified Mechanical and Electrical Equipment, Sheet 77 of 162; and Table 3.11-1—List of Environmentally Qualified Electrical/I&C Equipment, Sheet 39 of 101.
- U.S. EPR FSAR Tier 2, Section 9.2.8.
- U.S. EPR FSAR Tier 2, Figure 9.2.8-1—Safety Chilled Water System Diagram, Sheets 1 of 4 and 2 of 4.

U.S. EPR FSAR Tier 2, Chapter 16, Technical Specifications (TS) Section 3.7.9 and Bases (B3.7.9) will be revised to allow one SCWS chiller to be inoperable for MODES 1 through 4, and allow a 30-day completion time for the chiller to be returned to service, in lieu of a 72-hour completion time.

The interface requirements for the heating, ventilation, air conditioning (HVAC) systems supplied by the SCWS will not change as a result of the modified SCWS design; however, the availability of these systems has increased through the increased reliability and serviceability of the SCWS.

The modified SCWS design does not change the air side of the safeguards building ventilation systems. The 72-hour allowed outage time (AOT) for the safeguards building ventilation system electrical division (SBVSED) in U.S. EPR FSAR Tier 2, Chapter 16, TS Section 3.7.13 is also not impacted. Maintenance can be performed on the ventilation system equipment within the allotted 72-hours and the maintenance train is available for the electrical and I&C rooms.

U.S. EPR FSAR Tier 2, Table 19.1-5—Systems Analyzed in U.S. EPR PRA will be revised to delete “independent,” because this is not always the mode of operation.

b. Refer to the Response to Part a.

FSAR Impact:

U.S. EPR FSAR Tier 1, Section 2.7.2, Table 2.7.2-1, Table 2.7.2-2, Table 2.7.2-3, and Figure 2.7.2-1 will be revised as described in the response and indicated on the enclosed markup.

U.S. EPR FSAR Tier 2, Table 3.10-1, Table 3.11-1, Section 9.2.8, Chapter 16, TS Sections 3.7.9 and Bases (B3.7.9), and Table 19.1-5 will be revised as described in the response and indicated on the enclosed markup.

U.S. EPR Final Safety Analysis Report Markups

2.7.2 Safety Chilled Water System

1.0 Description

The safety chilled water system (SCWS) is a safety-related system that delivers refrigerated chilled water to the safety-related heating, ventilation, air conditioning (HVAC) systems and to Division 1 and Division 4 low head safety injection (LHSI) motor cooler and pump sealing cooler.

The SCWS significant safety-related function is to provide chilled water as a heat sink to safety-related HVAC systems, the main control room (MCR) habitability, and cooling of the LHSI pump seal coolers and motor coolers in Division 1 and Division 4 in the event of a design basis accident.

The SCWS significant non-safety-related function is for Division 1 and Division 4 to function in the event of a station blackout (SBO) or loss of ultimate heat sink (LUHS).

2.0 Arrangement

2.1 The functional arrangement of the SCWS is as shown in Figure 2.7.2-1—Safety Chilled Water System Functional Arrangement.

2.2 The location of the SCWS equipment is as listed in Table 2.7.2-1—Safety Chilled Water System Equipment Mechanical Design.

09.02.02-53

2.3 Physical separation exists between divisions of the SCWS, excluding cross-connected piping.

3.0 Mechanical Design Features

3.1 Deleted.~~Equipment listed in Table 2.7.2-1 as ASME Code Section III is designed, welded, and hydrostatically tested in accordance with ASME Code Section III.~~

3.2 Check valves listed in Table 2.7.2-1 will function as listed in Table 2.7.2-1.

3.3 Deleted.

3.4 Components identified as Seismic Category I in Table 2.7.2-1 can withstand seismic design basis loads without a loss of the function listed in Table 2.7.2-1.~~Equipment identified as seismic Category I in Table 2.7.2-1 can withstand seismic design basis loads without loss of safety function as listed in Table 2.7.2-1.~~

3.5 Deleted.

3.6 Deleted.

3.7 Deleted.

3.8 Deleted.

3.9 Portions of the SCWS piping shown as ASME Code Section III in Figure 2.7.2-1 are designed in accordance with ASME Code Section III requirements.

3.10 Portions of the SCWS piping shown as ASME Code Section III in Figure 2.7.2-1 are installed in accordance with an ASME Code Section III Design Report.

3.11 Pressure boundary welds in portions of the SCWS piping shown as ASME Code Section III in Figure 2.7.2-1 are in accordance with ASME Code Section III.

3.12 Portions of the SCWS piping shown as ASME Code Section III in Figure 2.7.2-1 retain their pressure boundary integrity at their design pressure.

3.13 Portions of the SCWS piping shown as ASME Code Section III in Figure 2.7.2-1 are installed in accordance with ASME Code Section III requirements.

3.14 Components listed in Table 2.7.2-1 as ASME Code Section III are designed in accordance with ASME Code Section III requirements.

3.15 Components listed in Table 2.7.2-1 as ASME Code Section III are fabricated in accordance with ASME Code Section III requirements.

3.16 Pressure boundary welds on components listed in Table 2.7.2-1 as ASME Code Section III are in accordance with ASME Code Section III requirements.

3.17 Components listed in Table 2.7.2-1 as ASME Code Section III retain their pressure boundary integrity at their design pressure.

4.0 I&C Design Features, Displays and Controls

4.1 Displays listed in Table 2.7.2-2—Safety Chilled Water System Equipment I&C and Electrical Design are retrievable in the MCR and the remote shutdown station (RSS) as listed in Table 2.7.2-2.

4.2 The SCWS equipment controls are provided in the MCR and the RSS as listed in Table 2.7.2-2.

4.3 Deleted~~Equipment listed as being controlled by a priority and actuator control system (PACS) module in Table 2.7.2-2 responds to the state requested by a test signal~~

09.02.02-53

4.4 The SCWS has the following interlocks with Division 1 and 2 or Division 3 and 4 cross-tied: The non running division chiller and pump(s) automatically start if the running division chiller or pumps(s) trip.~~The SCWS has the following interlocks: The standby recirculation pump automatically starts if the running pump trips.~~

5.0 Electrical Power Design Features

5.1 The components designated as Class 1E in Table 2.7.2-2 are powered from Class 1E division as listed in Table 2.7.2-2 in a normal or alternate feed condition.

5.2 Valves listed in Table 2.7.2-2 fail as-is on loss of power.

6.0 Environmental Qualifications

6.1 Components in Table 2.7.2-2, that are designated as harsh environment, will perform the function listed in Table 2.7.2-1 in the environments that exist during and following design basis events.~~Equipment listed in Table 2.7.2-2 for harsh environment can perform the safety function in Table 2.7.2-1 following exposure to the design basis environments for the time required.~~

7.0 Equipment and System Performance

7.1 The SCWS chiller refrigerating units shown on Figure 2.7.2-1 have the capacity to provide chilled water at the temperature to support the heat removal requirements of each user.

7.2 The pumps listed in Table 2.7.2-1 have sufficient net positive suction head ~~absolute~~available.

7.3 The SCWS delivers the design flow rate to the equipment listed in Table 2.7.2-1.

7.4 Class 1E valves listed in Table 2.7.2-2 can perform the function listed in Table 2.7.2-1 under system operating ~~design~~ conditions.

7.5 The SCWS provides for flow testing of the chilled water circulation pumps during plant operation.

8.0 System Inspections, Tests, Analysis, and Acceptance Criteria

Table 2.7.2-3 lists the SCWS ITAAC.

Table 2.7.2-1—Safety Chilled Water System Equipment Mechanical Design (5 Sheets)

~~Equipment~~ Description	~~Equipment~~ Tag Number (1)	~~Equipment~~ Location	ASME Code Section III	Function	Seismic Category
Check Valve	30QKC10AA028	Safeguard Building ~~Division~~ 1	Yes	Open-Close	I
Cross-Tie Valve	30QKA10AA102	Safeguard Building 1	Yes	Open-Close	I
Cross-Tie Valve	30QKA10AA103	Safeguard Building 1	Yes	Open-Close	I
Flow Control Valve 09.02.02-53	30QKC10AA025	Safeguard Building ~~Division~~ 1	Yes	Open-Close	I
Safety Chilled Water Division 2					
Water Cooled Condenser	30QKA20AC002	Safeguard Building ~~Division~~ 2	Yes	Run	I
Evaporator	30QKA20AC001	Safeguard Building ~~Division~~ 2	Yes	Run	I
Chilled Water Circulation Pump	30QKA20AP107	Safeguard Building ~~Division~~ 2	Yes	Run	I
Chilled Water Circulation Pump	30QKA20AP108	Safeguard Building ~~Division~~ 2	Yes	Run	I
Expansion Tank	30QKA20BB101	Safeguard Building ~~Division~~ 2	Yes	Maintain system static pressure	I
Flow Control Valve	30QKA20AA101	Safeguard Building ~~Division~~ 2	Yes	Open-Close	I
Flow Control Valve	30QKB20AA101	Safeguard Building ~~Division~~ 2	Yes	Open-Close	I
Flow Control Valve	30QKC20AA101	Safeguard Building ~~Division~~ 2	Yes	Open-Close	I
Pressure Relief Valve	30QKA20AA191	Safeguard Building ~~Division~~ 2	Yes	Open	I

Table 2.7.2-1—Safety Chilled Water System Equipment Mechanical Design (5 Sheets)

~~Equipment~~ Description	~~Equipment~~ Tag Number (1)	~~Equipment~~ Location	ASME Code Section III	Function	Seismic Category
Check Valve	30QKA20AA011	Safeguard Building ~~Division~~ 2	Yes	Open-Close	I
Check Valve	30QKA20AA003	Safeguard Building ~~Division~~ 2	Yes	Open-Close	I
Check Valve 09.02.02-53	30QKA20AA018	Safeguard Building ~~Division~~ 2	Yes	Open-Close	I
Cross-Tie Valve	30QKA20AA102	Safeguard Building 2	Yes	Open-Close	I
Cross-Tie Valve	30QKA20AA103	Safeguard Building 2	Yes	Open-Close	I
Safety Chilled Water Division 3					
Water Cooled Condenser	30QKA30AC002	Safeguard Building ~~Division~~ 3	Yes	Run	I
Evaporator	30QKA30AC001	Safeguard Building ~~Division~~ 3	Yes	Run	I
Chilled Water Circulation Pump	30QKA30AP107	Safeguard Building ~~Division~~ 3	Yes	Run	I
Chilled Water Circulation Pump	30QKA30AP108	Safeguard Building ~~Division~~ 3	Yes	Run	I
Expansion Tank	30QKA30BB101	Safeguard Building ~~Division~~ 3	Yes	Maintain system static pressure	I
Flow Control Valve	30QKA30AA101	Safeguard Building ~~Division~~ 3	Yes	Open-Close	I
Flow Control Valve	30QKB30AA101	Safeguard Building ~~Division~~ 3	Yes	Open-Close	I
Flow Control Valve	30QKC30AA101	Safeguard Building ~~Division~~ 3	Yes	Open-Close	I

Table 2.7.2-1—Safety Chilled Water System Equipment Mechanical Design (5 Sheets)

~~Equipment~~ Description	~~Equipment~~ Tag Number (1)	~~Equipment~~ Location	ASME Code Section III	Function	Seismic Category
Pressure Relief Valve	30QKA30AA191	Safeguard Building ~~Division~~ 3	Yes	Open	I
Check Valve	30QKA30AA011	Safeguard Building ~~Division~~ 3	Yes	Open-Close	I
Check Valve	30QKA30AA003	Safeguard Building ~~Division~~ 3	Yes	Open-Close	I
Check Valve 09.02.02-53	30QKA30AA018	Safeguard Building ~~Division~~ 3	Yes	Open-Close	I
Cross-Tie Valve	30QKA30AA102	Safeguard Building 3	Yes	Open-Close	I
Cross-Tie Valve	30QKA30AA103	Safeguard Building 3	Yes	Open-Close	I
Safety Chilled Water Division 4					
Air Cooled Condenser	30QKA40AC002	Safeguard Building ~~Division~~ 4	Yes	Run	I
Evaporator	30QKA40AC001	Safeguard Building ~~Division~~ 4	Yes	Run	I
Chilled Water Circulation Pump	30QKA40AP107	Safeguard Building ~~Division~~ 4	Yes	Run	I
Chilled Water Circulation Pump	30QKA40AP108	Safeguard Building ~~Division~~ 4	Yes	Run	I
Expansion Tank	30QKA40BB101	Safeguard Building ~~Division~~ 4	Yes	Maintain system static pressure	I
Flow Control Valve	30QKA40AA101	Safeguard Building ~~Division~~ 4	Yes	Open-Close	I
Flow Control Valve	30QKB40AA101	Safeguard Building ~~Division~~ 4	Yes	Open-Close	I

Table 2.7.2-1—Safety Chilled Water System Equipment Mechanical Design (5 Sheets)

~~Equipment~~ Description	~~Equipment~~ Tag Number (1)	~~Equipment~~ Location	ASME Code Section III	Function	Seismic Category
Flow Control Valve	30QKC40AA101	Safeguard Building ~~Division~~ 4	Yes	Open-Close	I
Pressure Relief Valve	30QKA40AA191	Safeguard Building ~~Division~~ 4	Yes	Open	I
Check Valve	30QKA40AA011	Safeguard Building ~~Division~~ 4	Yes	Open-Close	I
Check Valve	30QKA40AA003	Safeguard Building ~~Division~~ 4	Yes	Open-Close	I
Check Valve	30QKA40AA018	Safeguard Building ~~Division~~ 4	Yes	Open-Close	I
Check Valve	30QKC40AA028	Safeguard Building ~~Division~~ 4	Yes	Open-Close	I
Cross-Tie Valve	30QKA40AA102	Safeguard Building 4	Yes	Open-Close	I
Cross-Tie Valve	30QKA40AA103	Safeguard Building 4	Yes	Open-Close	I
Flow Control Valve 09.02.02-53	30QKC40AA025	Safeguard Building ~~Division~~ 4	Yes	Open-Close	I

1) Equipment tag numbers are provided for information only and are not part of the certified design.

Table 2.7.2–2—Safety Chilled Water System Equipment I&C and Electrical Design (3 Sheets)

~~Equipment~~ Description	~~Equipment~~ Tag Number (1)	~~Equipment~~ Location	IEEE Class 1E (2)	EQ – Harsh Env.	PACS	MRC / RSS Displays	MCR / RSS Controls
Safety Chilled Water Division 1							
Chiller Refrigerating Unit with Air Cooled Condenser	30QKA10AH112	Safeguard Building ~~Division~~ 1	Division 1^{N} ~~Division 2^{A}~~	Yes	N/A	On-off / On-off	Start-Stop / Start-Stop
Chilled Water Circulation Pump	30QKA10AP107	Safeguard Building ~~Division~~ 1	Division 1^{N} ~~Division 2^{A}~~	Yes	N/A	On-off / On-off	Start-Stop / Start-Stop
Chilled Water Circulation Pump	30QKA10AP108	Safeguard Building ~~Division~~ 1	Division 1^{N}	Yes	N/A	On-off / On-off	Start-Stop / Start-Stop
Cross-Tie Valve	30QKA10AA102	Safeguard Building 1	Division 1^{N} Division 2^{A}	Yes	N/A	Pos / Pos	Open-Close / Open-Close
Cross-Tie Valve	30QKA10AA103	Safeguard Building 1	Division 1^{N} Division 2^{A}	Yes	N/A	Pos / Pos	Open-Close / Open-Close
Flow Control Valve	30QKA10AA101	Safeguard Building ~~Division~~ 1	Division 1^{N} Division 2^{A}	Yes	N/A	Pos / Pos	Throttling / Throttling
Flow Control Valve	30QKB10AA101	Safeguard Building ~~Division~~ 1	Division 1^{N} Division 2^{A}	Yes	N/A	Pos / Pos	Throttling / Throttling
Flow Control Valve	30QKC10AA101	Safeguard Building ~~Division~~ 1	Division 1^{N} Division 2^{A}	Yes	N/A	Pos / Pos	Throttling / Throttling
Flow Control Valve	30QKC10AA025	Safeguard Building ~~Division~~ 1	Division 1^{N} Division 2^{A}	Yes	N/A	Pos / Pos	Throttling / Throttling
Safety Chilled Water Division 2							
Chiller Refrigerating Unit with Water Cooled Condenser	30QKA20AH112	Safeguard Building ~~Division~~ 2	Division 2^{N} ~~Division 1^{A}~~	Yes	N/A	On-off / On-off	Start-Stop / Start-Stop

09.02.02-53

09.02.02-53

Table 2.7.2–2—Safety Chilled Water System Equipment I&C and Electrical Design (3 Sheets)

09.02.02-53

~~Equipment~~ Description	~~Equipment~~ Tag Number (1)	~~Equipment~~ Location	IEEE Class 1E (2)	EQ – Harsh Env.	PACS	MRC / RSS Displays	MCR / RSS Controls
Chilled Water Circulation Pump	30QKA20AP107	Safeguard Building ~~Division~~ 2	Division 2^{N} ~~Division 1^{A}~~	Yes	N/A	On-off / On-off	Start-Stop / Start-Stop
Chilled Water Circulation Pump	30QKA20AP108	Safeguard Building ~~Division~~ 2	Division 2^{N}	Yes	N/A	On-off / On-off	Start-Stop / Start-Stop
Cross-Tie Valve	30QKA20AA102	Safeguard Building 2	Division 2^{N} Division 1^{A}	Yes	N/A	Pos / Pos	Open-Close / Open-Close
Cross-Tie Valve	30QKA20AA103	Safeguard Building 2	Division 2^{N} Division 1^{A}	Yes	N/A	Pos / Pos	Open-Close / Open-Close
Flow Control Valve	30QKA20AA101	Safeguard Building ~~Division~~ 2	Division 2^{N} Division 1^{A}	Yes	N/A	Pos / Pos	Throttling / Throttling
Flow Control Valve	30QKB20AA101	Safeguard Building ~~Division~~ 2	Division 2^{N} Division 1^{A}	Yes	N/A	Pos / Pos	Throttling / Throttling
Flow Control Valve	30QKC20AA101	Safeguard Building ~~Division~~ 2	Division 2^{N} Division 1^{A}	Yes	N/A	Pos / Pos	Throttling / Throttling
Safety Chilled Water Division 3							
Chiller Refrigerating Unit with Water Cooled Condenser	30QKA30AH112	Safeguard Building ~~Division~~ 3	Division 3^{N} ~~Division 4^{A}~~	Yes	N/A	On-off / On-off	Start-Stop / Start-Stop
Chilled Water Circulation Pump	30QKA30AP107	Safeguard Building ~~Division~~ 3	Division 3^{N} ~~Division 4^{A}~~	Yes	N/A	On-off / On-off	Start-Stop / Start-Stop
Chilled Water Circulation Pump	30QKA30AP108	Safeguard Building ~~Division~~ 3	Division 3^{N}	Yes	N/A	On-off / On-off	Start-Stop / Start-Stop
Cross-Tie Valve	30QKA30AA102	Safeguard Building 3	Division 3^{N} Division 4^{A}	Yes	N/A	Pos / Pos	Open-Close / Open-Close

09.02.02-53

09.02.02-53

Table 2.7.2–2—Safety Chilled Water System Equipment I&C and Electrical Design (3 Sheets)

~~Equipment~~ Description	~~Equipment~~ Tag Number (1)	~~Equipment~~ Location	IEEE Class 1E (2)	EQ – Harsh Env.	PACS	MRC / RSS Displays	MCR / RSS Controls
Cross-Tie Valve	30QKA30AA103	Safeguard Building 3	Division 3^{N} Division 4^{A}	Yes	N/A	Pos / Pos	Open-Close / Open-Close
Flow Control Valve 09.02.02-53	30QKA30AA101	Safeguard Building ~~Division~~ 3	Division 3^{N} Division 4^{A}	Yes	N/A	Pos / Pos	Throttling / Throttling
Flow Control Valve	30QKB30AA101	Safeguard Building ~~Division~~ 3	Division 3^{N} Division 4^{A}	Yes	N/A	Pos / Pos	Throttling / Throttling
Flow Control Valve	30QKC30AA101	Safeguard Building ~~Division~~ 3	Division 3^{N} Division 4^{A}	Yes	N/A	Pos / Pos	Throttling / Throttling
Safety Chilled Water Division 4							
Chiller Refrigerating Unit with Air Cooled Condenser	30QKA40AH112	Safeguard Building ~~Division~~ 4 09.02.02-53	Division 4^{N} ~~Division 3^{A}~~	Yes	N/A	On-off / On-off	Start-Stop / Start-Stop
Chilled Water Circulation Pump	30QKA40AP107	Safeguard Building ~~Division~~ 4	Division 4^{N} ~~Division 3^{A}~~	Yes	N/A	On-off / On-off	Start-Stop / Start-Stop
Chilled Water Circulation Pump	30QKA40AP108	Safeguard Building ~~Division~~ 4	Division 4^{N}	Yes	N/A	On-off / On-off	Start-Stop / Start-Stop
Cross-Tie Valve	30QKA40AA102	Safeguard Building 4	Division 4^{N} Division 3^{A}	Yes	N/A	Pos / Pos	Open-Close / Open-Close
Cross-Tie Valve	30QKA40AA103	Safeguard Building 4	Division 4^{N} Division 3^{A}	Yes	N/A	Pos / Pos	Open-Close / Open-Close
Flow Control Valve 09.02.02-53	30QKA40AA101	Safeguard Building ~~Division~~ 4	Division 4^{N} Division 3^{A}	Yes	N/A	Pos / Pos	Throttling / Throttling
Flow Control Valve	30QKB40AA101	Safeguard Building ~~Division~~ 4	Division 4^{N} Division 3^{A}	Yes	N/A	Pos / Pos	Throttling / Throttling

Table 2.7.2-3—Safety Chilled Water System ITAAC
(5 Sheets)

Commitment Wording		Inspections, Tests, Analyses	Acceptance Criteria
4.1	Displays exist or can be retrieved in the MCR and RSS as identified in Table 2.7.2-2.	Inspections will be performed for the existence or retrievability of the displays in the MCR or the RSS as listed in Table 2.7.2-2.	a. The displays listed in Table 2.7.2-2 as being retrieved in the MCR can be retrieved in the MCR. b. The displays listed in Table 2.7.2-2 as being retrieved in the RSS can be retrieved in the RSS.
4.2	Controls exist in the MCR and the RSS as identified in Table 2.7.2-2.	Test will be performed for the existence of control signals from the MCR and the RSS to the equipment listed in Table 2.7.2-2.	a. The controls listed in Table 2.7.2-2 as being in the MCR exist in the MCR. b. The controls listed in Table 2.7.2-2 as being in the RSS exist in the RSS.
4.3	~~Equipment listed as being controlled by a PACS module in Table 2.7.2-2 responds to the state requested by a test signal.~~Deleted	~~A test will be performed using test signals.~~ Deleted 09.02.02-53	~~Equipment listed as being controlled by a PACS module in Table 2.7.2-2 responds to the state requested by the test signal.~~ Deleted
4.4	The SCWS has the following interlocks with Division 1 and 2 or Division 3 and 4 cross-tied: The non running division chiller and pump(s) automatically start if the running division chiller or pumps(s) trip.~~The SCWS has the following interlocks: The standby recirculation pump automatically starts if the running pump trips.~~	Tests will be performed using test signals to verify the interlock.	The following interlock responds as specified below when activated by a test signal: With Division 1 and 2 or Division 3 and 4 cross-tied: The non running division chiller and pump(s) automatically start if the running division chiller or pumps(s) trip.~~The standby recirculation pump automatically starts if the running pump trips.~~
5.1	The components designated as Class 1E in Table 2.7.2-2 are powered from the Class 1E division as listed in Table 2.7.2-2 in a normal or alternate	a. Testing will be performed for components designated as Class 1E in Table 2.7.2-2 by providing a test signal in each normally aligned division.	a. The test signal provided in the normally aligned division is present at the respective Class 1E component identified in Table 2.7.2-2.

Figure 2.7.2-1—Safety Chilled Water System Functional Arrangement
Sheet 1 of 4

09.02.02-53

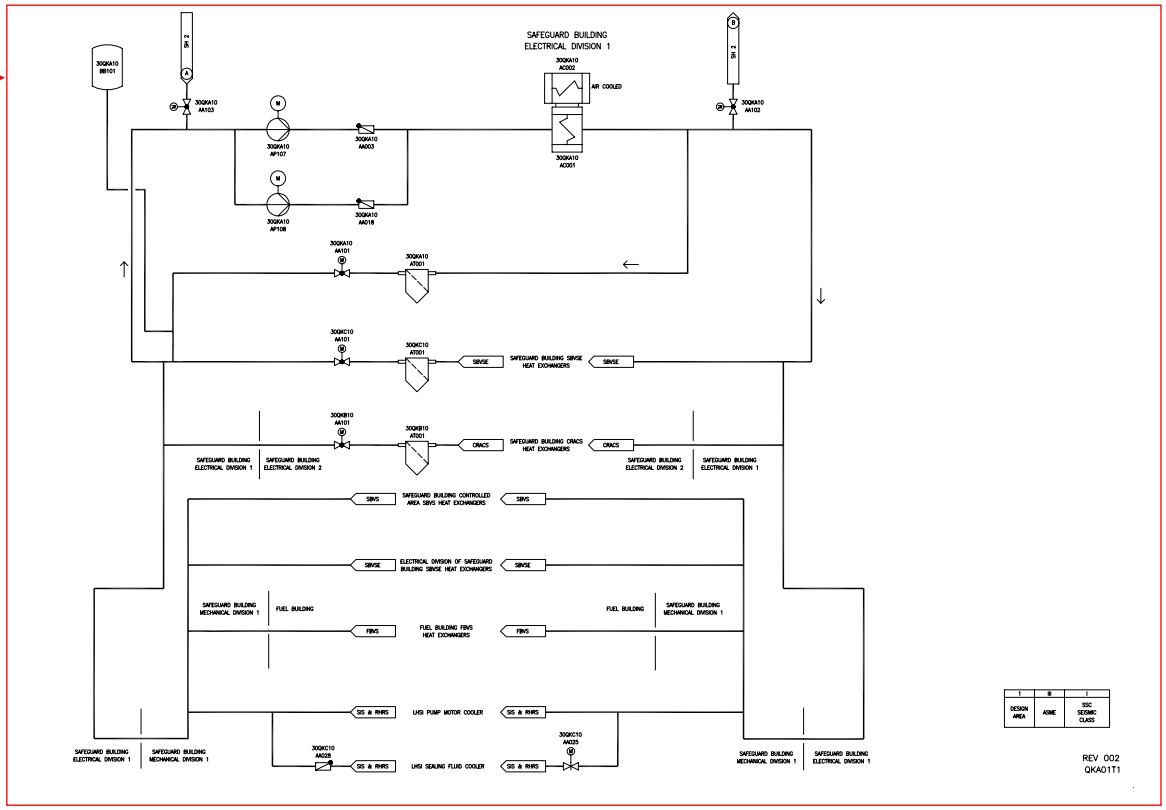

Figure 2.7.2-1—Safety Chilled Water System Functional Arrangement
Sheet 2 of 4

09.02.02-53

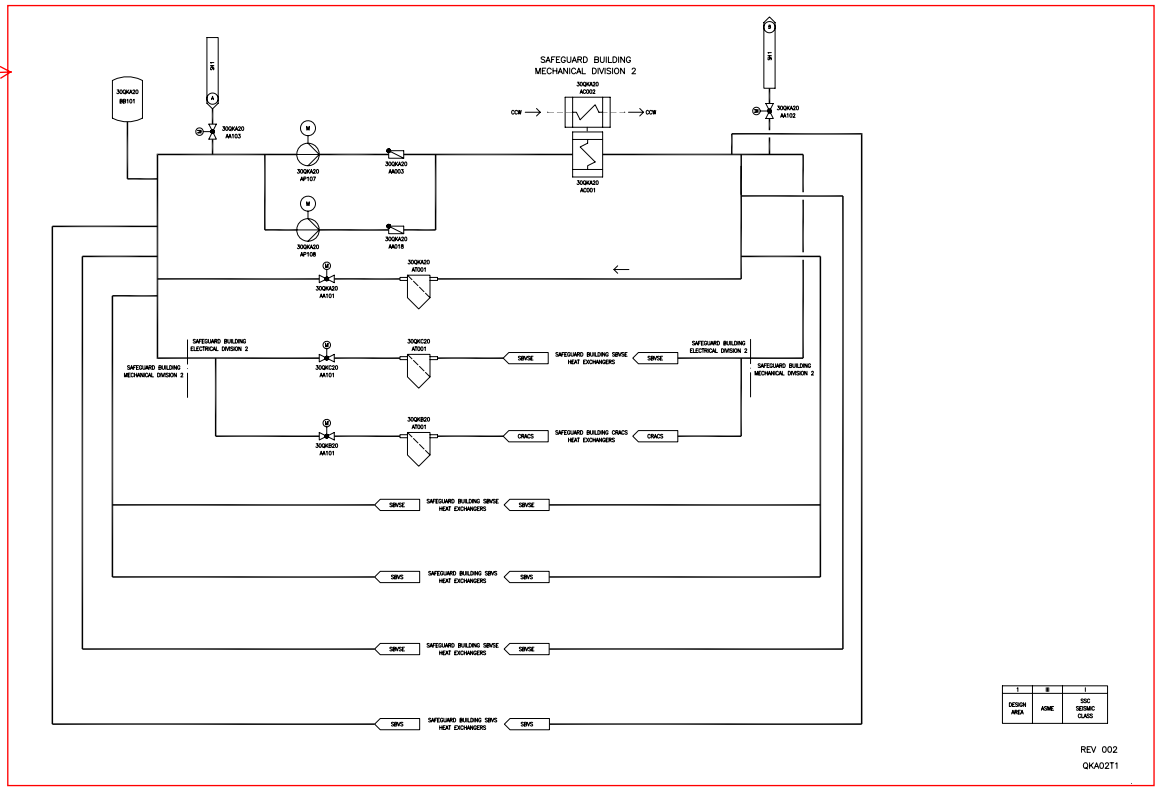

Figure 2.7.2-1—Safety Chilled Water System Functional Arrangement
Sheet 3 of 4

09.02.02-53

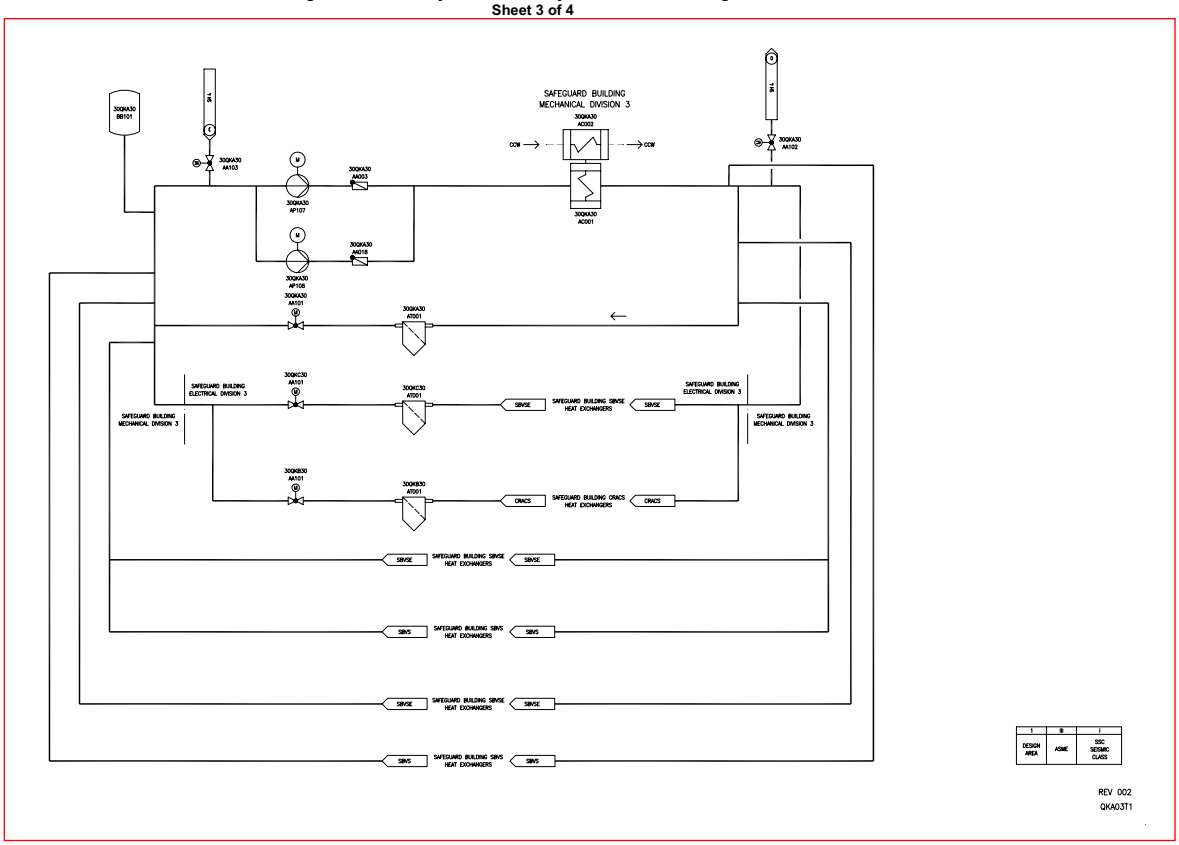

Figure 2.7.2-1—Safety Chilled Water System Functional Arrangement
Sheet 4 of 4

09.02.02-53

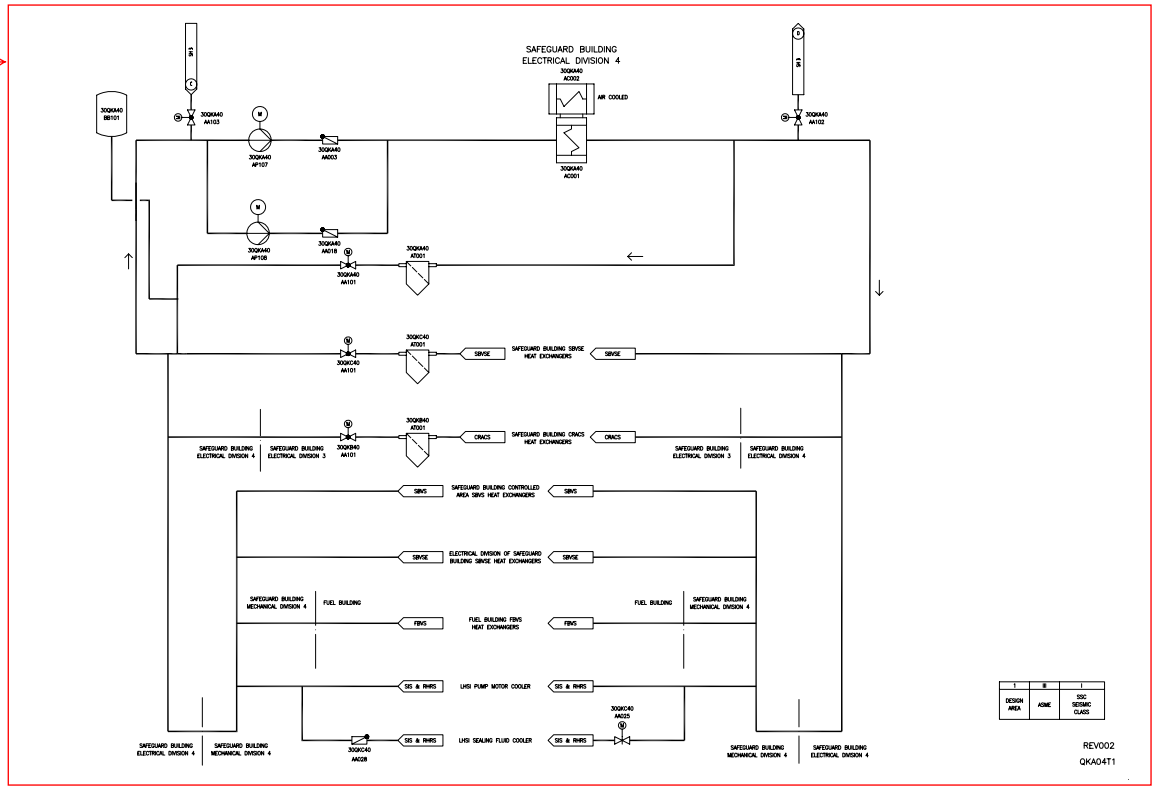

Next File

Table 3.10-1 List of Seismically and Dynamically Qualified Mechanical and Electrical Equipment

Name Tag (Equipment Description)	Tag Number	Local Area KKS ID (Room Location)	EQ Environment (Note 1)	Radiation Environment Zone (Note 2)	EQ Designated Function (Note 3)	Safety Class (Note 4)	EQ Program Designation (Note 5)	
ESW Drain Isolation Vlv	30PEB30AA408	33UJH01038	M	H	SI	S C/NM	Y (3)	Y (5)
CCW HX Tube Side Vent Vlv	30PEB30AA508	33UJH10020	M	H	SI	S C/NM	Y (3)	Y (5)
CCW HX Tube Side Vent Vlv	30PEB30AA509	33UJH10020	M	H	SI	S C/NM	Y (3)	Y (5)
Orifice Plate	30PEB30BP002	33UJH05020	M	H	SI	S C/NM	Y (3)	Y (5)
CCW HX DP Measurement	30PEB30CP004	33UJH05020	M	H	SI	S		Y (5)
CCW HX Outlet Temp Measurement	30PEB30CT002	33UJH05020	M	H	SI	S		Y (5)
CCW HX Inlet Isolation Vlv	30PEB40AA007	34UJH05026	M	H	SI	S C/NM	Y (3)	Y (5)
CCW HX Outlet Isolation Vlv	30PEB40AA009	34UJH05026	M	H	SI	S C/NM	Y (3)	Y (5)
CCW HX Tube Side Thermal Relief Vlv	30PEB40AA192	34UJH05026	M	H	SI	S C/NM	Y (3)	Y (5)
CCW HX Inlet Side DP Root Vlv	30PEB40AA306	34UJH10026	M	H	SI	S C/NM	Y (3)	Y (5)
CCW HX Outlet Side DP Root Vlv	30PEB40AA307	34UJH10026	M	H	SI	S C/NM	Y (3)	Y (5)
ESW Drain Isolation Vlv	30PEB40AA401	34UJH01026	M	H	SI	S C/NM	Y (3)	Y (5)
ESW Drain Isolation Vlv	30PEB40AA402	34UJH10026	M	H	SI	S C/NM	Y (3)	Y (5)
ESW Drain Isolation Vlv	30PEB40AA403	34UJH05026	M	H	SI	S C/NM	Y (3)	Y (5)
ESW Drain Isolation Vlv	30PEB40AA405	34UJH05026	M	H	SI	S C/NM	Y (3)	Y (5)
ESW Drain Isolation Vlv	30PEB40AA407	34UJH01026	M	H	SI	S C/NM	Y (3)	Y (5)
ESW Drain Isolation Vlv	30PEB40AA408	34UJH01026	M	H	SI	S C/NM	Y (3)	Y (5)
CCW HX Tube Side Vent Vlv	30PEB40AA508	34UJH10026	M	H	SI	S C/NM	Y (3)	Y (5)
CCW HX Tube Side Vent Vlv	30PEB40AA509	34UJH10026	M	H	SI	S C/NM	Y (3)	Y (5)
Orifice Plate	30PEB40BP002	34UJH05026	M	H	SI	S C/NM	Y (3)	Y (5)
CCW HX DP Measurement	30PEB40CP004	34UJH05026	M	H	SI	S		Y (5)
CCW HX Outlet Temp Measurement	30PEB40CT002	34UJH05026	M	H	SI	S		Y (5)
CCW HX Outlet Isolation Vlv	30PEB80AA004	34UJH05026	M	H	SI	S C/NM	Y (3)	Y (5)
ESW Drain Isolation Vlv	30PEB80AA405	34UJH01026	M	H	SI	S C/NM	Y (3)	Y (5)
Safety Chilled Water System (SCWS)								
QKA Cross-Tie Valve, Div 1	30QKA10AA102	31UJK22028	M	M	SI	S C/NM		Y(5)
QKA Cross-Tie Valve, Div 1	30QKA10AA103	31UJK22028	M	M	SI	S C/NM		Y(5)
QK Tank Isol Valve, Div 1	30QKA10AA001	31UJK26029	M	M	SI	S C/NM		Y (5)
QK Pmp #1 Suct Isol Valve, Div 1	30QKA10AA002	31UJK22028	M	M	SI	S C/NM		Y (5)
QK Pmp #1 Disch Check Valve, Div 1	30QKA10AA003	31UJK22028	M	M	SI	S		Y (5)
QK Pmp #1 Disch Isol Valve, Div 1	30QKA10AA004	31UJK22028	M	M	SI	S C/NM		Y (5)
QK Chiller Dnstrm Flow Reg Valve, Div 1	30QKA10AA005	31UJK22028	M	M	SI	S C/NM		Y (5)
QK Chiller Dnstrm Isol Valve, Div 1	30QKA10AA006	31UJK22028	M	M	SI	S C/NM		Y (5)
QKA10AT001 Upstrm Isol Valve, Div 1	30QKA10AA007	31UJK26029	M	M	SI	S C/NM		Y (5)
QKA10AT001 Dnstrm Flow Reg Valve, Div 1	30QKA10AA008	31UJK26029	M	M	SI	S C/NM		Y (5)
QKA10AT001 Dnstrm Isol Valve, Div 1	30QKA10AA009	31UJK26029	M	M	SI	S C/NM		Y (5)

09.02.02-53

Table 3.10-1 List of Seismically and Dynamically Qualified Mechanical and Electrical Equipment

Name Tag (Equipment Description)	Tag Number	Local Area KKS ID (Room Location)	EQ Environment (Note 1)	Radiation Environment Zone (Note 2)	EQ Designated Function (Note 3)		Safety Class (Note 4)		EQ Program Designation (Note 5)	
QK QCB Isol Valve, Div 1	30QKA10AA010	31UJK22028	M	M		SI	S	C/NM		Y (5)
QK QCB Check Valve, Div 1	30QKA10AA011	31UJK22028	M	M		SI	S			Y (5)
QK Bypass Control Valve-MOV, Div 1	30QKA10AA101	31UJK26029	M	M	ES	SI	S	C/NM		Y (5)
QK System Press Relief Valve, Div 1	30QKA10AA191	31UJK26029	M	M	ES	SI	S	C/NM		Y (5)
QKA CP501 Root Valve, Div 1	30QKA10AA301	31UJK26029	M	M		SI	S	C/NM		Y (5)
QKA CP502 Root Valve, Div 1	30QKA10AA302	31UJK26029	M	M		SI	S	C/NM		Y (5)
QKA CP001 Root Valve, Div 1	30QKA10AA303	31UJK26029	M	M		SI	S	C/NM		Y (5)
QKA CP002 Root Valve, Div 1	30QKA10AA304	31UJK26029	M	M		SI	S	C/NM		Y (5)
QKA CP505 Root Valve, Div 1	30QKA10AA305	31UJK22028	M	M		SI	S	C/NM		Y (5)
QKA CP506 Root Valve, Div 1	30QKA10AA306	31UJK22028	M	M		SI	S	C/NM		Y (5)
QKA CP507 Root Valve, Div 1	30QKA10AA307	31UJK22028	M	M		SI	S	C/NM		Y (5)
QKA CP508 Root Valve, Div 1	30QKA10AA308	31UJK22028	M	M		SI	S	C/NM		Y (5)
QKA Chiller Upstrm CP008 Root Vlv, Div 1	30QKA10AA309	31UJK22028	M	M		SI	S	C/NM		Y (5)
QKA Chiller Dnstrm CP008 Root Vlv, Div 1	30QKA10AA310	31UJK22028	M	M		SI	S	C/NM		Y (5)
QKA CP511 Root Valve, Div 1	30QKA10AA311	31UJK26029	M	M		SI	S	C/NM		Y (5)
QKA CP512 Root Valve, Div 1	30QKA10AA312	31UJK26029	M	M		SI	S	C/NM		Y (5)
QKA CP513 Root Valve, Div 1	30QKA10AA315	31UJK26029	M	M		SI	S	C/NM		Y (5)
QKA CP514 Root Valve, Div 1	30QKA10AA316	31UJK26029	M	M		SI	S	C/NM		Y (5)
QKA10BR111 Drain Valve, Div 1	30QKA10AA401	31UJK22028	M	M		SI	S	C/NM		Y (5)
QKA10BR108 Drain Valve, Div 1	30QKA10AA402	31UJK22028	M	M		SI	S	C/NM		Y (5)
QKA10BR110 Drain Valve, Div 1	30QKA10AA403	31UJK22028	M	M		SI	S	C/NM		Y (5)
QK Chiller Upstrm Vent Valve, Div 1	30QKA10AA501	31UJK22028	M	M		SI	S	C/NM		Y (5)
QKA10AT001 Upstrm Vent Valve, Div 1	30QKA10AA502	31UJK26029	M	M		SI	S	C/NM		Y (5)
QK Sample Isol Valve, Div 1	30QKA10AA609	31UJK22028	M	M		SI	S	C/NM		Y (5)
Safety Chilled Water Evaporator, Div 1	30QKA10AC001	31UJK22028	M	M	ES	SI	S	C/NM		Y (5)
Safety Chilled Water Condenser, Div 1	30QKA10AC002	31UJK31032	M	M	ES	SI	S	C/NM		Y (5)
Safety Chilled Water Pump #1, Div 1	30QKA10AP107	31UJK22028	M	M	ES	SI	S	C/NM		Y (5)
Safety Chilled Screen for Bypass, Div 1	30QKA10AT001	31UJK26029	M	M		SI	S	C/NM		Y (5)
Safety Chilled Water Exp Tank, Div 1	30QKA10BB101	31UJK26029	M	M	ES	SI	S	C/NM		Y (5)
QKA Cross-Tie Valve, Div 2	30QKA20AA102	32UJH05020	M	H		SI	S	C/NM	Y(3)	Y(5)
QKA Cross-Tie Valve, Div 2	30QKA20AA103	32UJH05020	M	H		SI	S	C/NM	Y(3)	Y(5)
QK Tank Isol Valve, Div 2	30QKA20AA001	32UJH05020	M	H		SI	S	C/NM	Y (3)	Y (5)
QK Pmp #1 Suct Isol Valve, Div 2	30QKA20AA002	32UJH05020	M	H		SI	S	C/NM	Y (3)	Y (5)
QK Pmp #1 Disch Check Valve, Div 2	30QKA20AA003	32UJH05020	M	H		SI	S			Y (5)
QK Pmp #1 Disch Isol Valve, Div 2	30QKA20AA004	32UJH05020	M	H		SI	S	C/NM	Y (3)	Y (5)
QK Chiller Dnstrm Flow Reg Valve, Div 2	30QKA20AA005	32UJH10020	M	H		SI	S	C/NM	Y (3)	Y (5)
QK Chiller Dnstrm Isol Valve, Div 2	30QKA20AA006	32UJH10020	M	H		SI	S	C/NM	Y (3)	Y (5)
QKA20AT001 Upstrm Isol Valve, Div 2	30QKA20AA007	32UJH05020	M	H		SI	S	C/NM	Y (3)	Y (5)
QKA20AT001 Dnstrm Flow Reg Valve, Div 2	30QKA20AA008	32UJH05020	M	H		SI	S	C/NM	Y (3)	Y (5)

09.02.02-53

Table 3.10-1 List of Seismically and Dynamically Qualified Mechanical and Electrical Equipment

Name Tag (Equipment Description)	Tag Number	Local Area KKS ID (Room Location)	EQ Environment (Note 1)	Radiation Environment Zone (Note 2)	EQ Designated Function (Note 3)		Safety Class (Note 4)		EQ Program Designation (Note 5)	
QKA20AT001 Dnstrm Isol Valve, Div 2	30QKA20AA009	32UJH05020	M	H		SI	S	C/NM	Y (3)	Y (5)
QK QCB Isol Valve, Div 2	30QKA20AA010	32UJH05020	M	H		SI	S	C/NM	Y (3)	Y (5)
QK QCB Check Valve, Div 2	30QKA20AA011	32UJH05020	M	H		SI	S			Y (5)
QK Bypass Control Valve-MOV, Div 2	30QKA20AA101	32UJH05020	M	H	ES	SI	S	C/NM	Y (3)	Y (5)
QK System Press Relief Valve, Div 2	30QKA20AA191	32UJH05020	M	H	ES	SI	S	C/NM	Y (3)	Y (5)
QKA CP501 Root Valve, Div 2	30QKA20AA301	32UJH05020	M	H		SI	S	C/NM	Y (3)	Y (5)
QKA CP502 Root Valve, Div 2	30QKA20AA302	32UJH05020	M	H		SI	S	C/NM	Y (3)	Y (5)
QKA CP001 Root Valve, Div 2	30QKA20AA303	32UJH05020	M	H		SI	S	C/NM	Y (3)	Y (5)
QKA CP002 Root Valve, Div 2	30QKA20AA304	32UJH05020	M	H		SI	S	C/NM	Y (3)	Y (5)
QKA CP505 Root Valve, Div 2	30QKA20AA305	32UJH05020	M	H		SI	S	C/NM	Y (3)	Y (5)
QKA CP506 Root Valve, Div 2	30QKA20AA306	32UJH05020	M	H		SI	S	C/NM	Y (3)	Y (5)
QKA CP507 Root Valve, Div 2	30QKA20AA307	32UJH10020	M	H		SI	S	C/NM	Y (3)	Y (5)
QKA CP508 Root Valve, Div 2	30QKA20AA308	32UJH10020	M	H		SI	S	C/NM	Y (3)	Y (5)
QKA CP008 Upstrm Root Valve, Div 2	30QKA20AA309	32UJH10020	M	H		SI	S	C/NM	Y (3)	Y (5)
QKA CP0008 Dnstrm Root Valve, Div 2	30QKA20AA310	32UJH10020	M	H		SI	S	C/NM	Y (3)	Y (5)
QKA CP511 Root Valve, Div 2	30QKA20AA311	32UJH05020	M	H		SI	S	C/NM	Y (3)	Y (5)
QKA CP512 Root Valve, Dov 2	30QKA20AA312	32UJH05020	M	H		SI	S	C/NM	Y (3)	Y (5)
QKA CP513 Root Valve, Div 2	30QKA20AA315	32UJH05020	M	H		SI	S	C/NM	Y (3)	Y (5)
QKA CP514 Root Valve, Div 2	30QKA20AA316	32UJH05020	M	H		SI	S	C/NM	Y (3)	Y (5)
QKA20BR003 Drain Valve, Div 2	30QKA20AA401	32UJH01020	M	H		SI	S	C/NM	Y (3)	Y (5)
QKA20BR110 Drain Valve, Div 2	30QKA20AA402	32UJH05020	M	H		SI	S	C/NM	Y (3)	Y (5)
QKA20BR002 Drain Valve, Div 2	30QKA20AA403	32UJH05020	M	H		SI	S	C/NM	Y (3)	Y (5)
QKA20BR114 Drain Valve, Div 2	30QKA20AA404	32UJH05020	M	H		SI	S	C/NM	Y (3)	Y (5)
QKA20BR108 DrainValve, Div 2	30QKA20AA501	32UJH10020	M	H		SI	S	C/NM	Y (3)	Y (5)
QK Sample Isol Valve, Div 2	30QKA20AA609	32UJH05020	M	H		SI	S	C/NM	Y (3)	Y (5)
Safety Chilled Water Evaporator, Div 2	30QKA20AC001	32UJH10020	M	H	ES	SI	S	C/NM	Y (3)	Y (5)
Safety Chilled Water Condenser, Div 2	30QKA20AC002	32UJH10020	M	H	ES	SI	S	C/NM	Y (3)	Y (5)
Safety Chilled Water Pump #1, Div 2	30QKA20AP107	32UJH05020	M	H	ES	SI	S	C/NM	Y (3)	Y (5)
Safety Chilled Screen for Bypass, Div 2	30QKA20AT001	32UJH05020	M	H		SI	S	C/NM	Y (3)	Y (5)
Safety Chilled Water Exp Tank, Div 2	30QKA20BB101	32UJH05020	M	H	ES	SI	S	C/NM	Y (3)	Y (5)
QKA Cross-Tie Valve, Div 3	30QKA30AA102	33UJH05020	M	H		SI	S	C/NM	Y(3)	Y(5)
QKA Cross-Tie Valve, Div 3	30QKA30AA103	33UJH05020	M	H		SI	S	C/NM	Y(3)	Y(5)
QK Tank Isol Valve, Div 3	30QKA30AA001	33UJH05020	M	H		SI	S	C/NM	Y (3)	Y (5)
QK Pmp #1 Suct Isol Valv, Div 3	30QKA30AA002	33UJH05020	M	H		SI	S	C/NM	Y (3)	Y (5)
QK Pmp #1 Disch Check Valve, Div 3	30QKA30AA003	33UJH05020	M	H		SI	S			Y (5)
QK Pmp #1 Disch Isol Valve, Div 3	30QKA30AA004	33UJH05020	M	H		SI	S	C/NM	Y (3)	Y (5)
QK Chiller Dnstrm Flow Reg Valve, Div 3	30QKA30AA005	33UJH10020	M	H		SI	S	C/NM	Y (3)	Y (5)
QK Chiller Dnstrm Isol Valve, Div 3	30QKA30AA006	33UJH10020	M	H		SI	S	C/NM	Y (3)	Y (5)
QKA30AT001 Upstrm Isol Valve, Div 3	30QKA30AA007	33UJH05020	M	H		SI	S	C/NM	Y (3)	Y (5)

09.02.02-53

Table 3.10-1 List of Seismically and Dynamically Qualified Mechanical and Electrical Equipment

Name Tag (Equipment Description)	Tag Number	Local Area KKS ID (Room Location)	EQ Environment (Note 1)	Radiation Environment Zone (Note 2)	EQ Designated Function (Note 3)		Safety Class (Note 4)		EQ Program Designation (Note 5)	
QKA30AT001 Dnstrm Flow Reg Valve, Div 3	30QKA30AA008	33UJH05020	M	H		SI	S	C/NM	Y (3)	Y (5)
QKA30AT001 Dnstrm Isol Valve, Div 3	30QKA30AA009	33UJH05020	M	H		SI	S	C/NM	Y (3)	Y (5)
QK QCB Isol Valve, Div 3	30QKA30AA010	33UJH05020	M	H		SI	S	C/NM	Y (3)	Y (5)
QK QCB Check Valve, Div 3	30QKA30AA011	33UJH05020	M	H		SI	S	C/NM	Y (3)	Y (5)
QK Bypass Control Valve-MOV, Div 3	30QKA30AA101	33UJH05020	M	H	ES	SI	S	C/NM	Y (3)	Y (5)
QK System Press Relief Valve, Div 3	30QKA30AA191	33UJH05020	M	H		SI	S	C/NM	Y (3)	Y (5)
QKA CP501 Root Valve, Div 3	30QKA30AA301	33UJH05020	M	H		SI	S	C/NM	Y (3)	Y (5)
QKA CP502 Root Valve, Div 3	30QKA30AA302	33UJH05020	M	H		SI	S	C/NM	Y (3)	Y (5)
QKA CP001 Root Valve, Div 3	30QKA30AA303	33UJH05020	M	H		SI	S	C/NM	Y (3)	Y (5)
QKA CP002 Root Valve, Div 2	30QKA30AA304	33UJH05020	M	H		SI	S	C/NM	Y (3)	Y (5)
QKA CP505 Root Valve, Div 3	30QKA30AA305	33UJH05020	M	H		SI	S	C/NM	Y (3)	Y (5)
QKA CP506 Root Valve, Div 3	30QKA30AA306	33UJH05020	M	H		SI	S	C/NM	Y (3)	Y (5)
QKA CP507 Root Valve, Div 3	30QKA30AA307	33UJH10020	M	H		SI	S	C/NM	Y (3)	Y (5)
QKA CP508 Root Valve, Div 3	30QKA30AA308	33UJH10020	M	H		SI	S	C/NM	Y (3)	Y (5)
QKA CP008 Upstrm Root Valve, Div 3	30QKA30AA309	33UJH10020	M	H		SI	S	C/NM	Y (3)	Y (5)
QKA CP008 Dnstrm Root Valve, Div 3	30QKA30AA310	33UJH10020	M	H		SI	S	C/NM	Y (3)	Y (5)
QKA CP511 Root Valve, Div 3	30QKA30AA311	33UJH05020	M	H		SI	S	C/NM	Y (3)	Y (5)
QKA CP512 Root Valve, Div 3	30QKA30AA312	33UJH05020	M	H		SI	S	C/NM	Y (3)	Y (5)
QKA CP5513 Root Valve, Div 3	30QKA30AA315	33UJH05020	M	H		SI	S	C/NM	Y (3)	Y (5)
QKA CP514 Root Valve, Div 3	30QKA30AA316	33UJH05020	M	H		SI	S	C/NM	Y (3)	Y (5)
QKA30BR003 Drain Valve, Div 3	30QKA30AA401	33UJH01020	M	H		SI	S	C/NM	Y (3)	Y (5)
QKA30BR002 Drain Valve, Div 3	30QKA30AA402	33UJH05020	M	H		SI	S	C/NM	Y (3)	Y (5)
QKA30BR108 Drain Valve, Div 3	30QKA30AA403	33UJH10020	M	H		SI	S	C/NM	Y (3)	Y (5)
QKA30BR110 Drain Valve, Div 3	30QKA30AA404	33UJH10020	M	H		SI	S	C/NM	Y (3)	Y (5)
QKA30BR114 Drain Valve, Div 3	30QKA30AA405	30UFA01001	M	H		SI	S	C/NM	Y (3)	Y (5)
QKA30BR108 Vent Valve, Div 3	30QKA30AA501	33UJH10020	M	H		SI	S	C/NM	Y (3)	Y (5)
QKB30BR112 Vent Valve, Div 3	30QKA30AA503	33UJK31035	M	M		SI	S	C/NM		Y (5)
QK Sample Isol Valve, Div 2	30QKA30AA609	33UJH05020	M	H		SI	S	C/NM	Y (3)	Y (5)
Safety Chilled Water Evaporator, Div 3	30QKA30AC001	33UJH10020	M	H	ES	SI	S	C/NM	Y (3)	Y (5)
Safety Chilled Water Condenser, Div 3	30QKA30AC002	33UJH10020	M	H	ES	SI	S	C/NM	Y (3)	Y (5)
Safety Chilled Water Pump #1, Div 3	30QKA30AP107	33UJH05020	M	H	ES	SI	S	C/NM	Y (3)	Y (5)
Safety Chilled Screen for Bypass, Div 3	30QKA30AT001	33UJH05020	M	H		SI	S	C/NM	Y (3)	Y (5)
Safety Chilled Water Exp Tank, Div 3	30QKA30BB101	33UJH05020	M	H	ES	SI	S	C/NM	Y (3)	Y (5)
QKA Cross-Tie Valve, Div 4	30QKA40AA102	34UJK22028	M	M		SI	S	C/NM		Y(5)
QKA Cross-Tie Valve, Div 4	30QKA40AA103	34UJK22028	M	M		SI	S	C/NM		Y(5)
QK Tank Isol Valve, Div 4	30QKA40AA001	34UJK26029	M	M		SI	S	C/NM		Y (5)
QK Pmp #1 Suct Isol Valve, Div 4	30QKA40AA002	34UJK22028	M	M		SI	S	C/NM		Y (5)
QK Pmp #1 Disch Check Valve, Div 4	30QKA40AA003	34UJK22028	M	M		SI	S	C/NM		Y (5)
QK Pmp #1 Disch Isol Valve, Div 4	30QKA40AA004	34UJK22028	M	M		SI	S	C/NM		Y (5)

09.02.02-53

Table 3.11-1—List of Environmentally Qualified Electrical/I&C Equipment

Name Tag (Equipment Description)	Tag Number	Local Area KKS ID (Room Location)	EQ Environment (Note 1)	Radiation Environment Zone (Note 2)	EQ Designated Function (Note 3)	Safety Class (Note 4)	EQ Program Designation (Note 5)
Motor for Valve 30QNJ41AA027	30QNJ41AA027	30UJA18016	H	H	ES SI	S 1E EMC	Y (1) Y (5)
Motor for Valve 30QNJ41AA028	30QNJ41AA028	30UFA17095	M	H	ES SI	S 1E EMC	Y (2) Y (5) Y (6)
Secondary Sampling (SG Blowdown) System (SECSS)							
SG1 2ndary sampling outer C I-V motor	30QUC11AA001	30UFA10045	M	H	ES SI	S 1E EMC	Y (2) Y (5) Y (6)
SG1 2ndary sampling inner C I-V motor	30QUC11AA011	30UJA11013	H	H	ES SI	S 1E EMC	Y (1) Y (5)
SG2 2ndary sampling outer C I-V motor	30QUC12AA001	30UFA10045	M	H	ES SI	S 1E EMC	Y (2) Y (5) Y (6)
SG2 2ndary sampling inner C I-V motor	30QUC12AA011	30UJA11013	H	H	ES SI	S 1E EMC	Y (1) Y (5)
SG3 2ndary sampling outer C I-V motor	30QUC13AA001	30UFA06083	M	H	ES SI	S 1E EMC	Y (2) Y (5) Y (6)
SG3 2ndary sampling inner C I-V motor	30QUC13AA011	30UJA11016	H	H	ES SI	S 1E EMC	Y (1) Y (5)
SG4 2ndary sampling outer C I-V motor	30QUC14AA001	30UFA10095	M	H	ES SI	S 1E EMC	Y (2) Y (5) Y (6)
SG4 2ndary sampling inner C I-V motor	30QUC14AA011	30UJA11016	H	H	ES SI	S 1E EMC	Y (1) Y (5)
Compressed Air System (CAS)							
COMPRESSED AIR OURTER COTAINMENT ISOLATI	30SCB01AA001	30UFA13054	M	H	ES SI	S 1E EMC	Y (2) Y (5) Y (6)
COMPRESSED AIR INNER COTAINMENT ISOLATIO	30SCB01AA002	30UJA15016	H	H	ES SI	S 1E EMC	Y (1) Y (5)
Fire Water Distribution System (FWDS)							
FIRE WATER DISTRIBUTION SYSTEM CI VALVE	30SGB30AA031	30UFA13054	M	H	ES SI	S 1E EMC	Y (2) Y (5) Y (6)
FIRE WATER DISTRIBUTION SYSTEM CI VALVE	30SGB30AA032	30UJA15016	H	H	ES SI	S 1E EMC	Y (1) Y (5)
Nuclear Island Drain & Vent System (NI DVS)							
INNER CONT ISO VLV ACTUATOR	30KTA10AA017	30UJA07016	H	H	ES SI	S 1E EMC	Y (1) Y (5)
OUTER CONT ISO VALVE ACTUATOR	30KTA10AA018	30UFA06045	M	H	ES SI	S 1E EMC	Y (2) Y (5) Y (6)
INNER CONT ISO VLV FLOOR DRN 1 ACTUATOR	30KTC10AA005	30UJA07016	H	H	ES SI	S 1E EMC	Y (1) Y (5)
OUTER CONT ISO VLV FLOOR DRN 1 ACTUATOR	30KTC10AA006	30UFA06095	M	H	ES SI	S 1E EMC	Y (2) Y (5) Y (6)
OUTER CONT ISO VLV CHEM REINJ ACTUATOR	30KTC10AA010	30UFA06095	M	H	ES SI	S 1E EMC	Y (2) Y (5) Y (6)
OUTER CONT ISO VLV FLOOR DRN 2 ACTUATOR	30KTD10AA015	30UFA06095	M	H	ES SI	S 1E EMC	Y (2) Y (5) Y (6)
INNER CONT ISO VLV FLOOR DRN 2 ACTUATOR	30KTD10AA024	30UJA07016	H	H	ES SI	S 1E EMC	Y (1) Y (5)
OUTER CONT ISO VLV ANNULUS ACTUATOR	30KTD10AA025	30UFA10095	M	H	ES SI	S 1E EMC	Y (2) Y (5) Y (6)
Level Sensor for Sump KTE20 BB001	30KTE20CL001	31UJH01026	M	H	SI	S 1E EMC	Y (2) Y (5) Y (6)
Level Sensor for Sump KTE20 BB002	30KTE20CL003	32UJH01038	M	H	SI	S 1E EMC	Y (2) Y (5) Y (6)
Level Sensor for Sump KTE20 BB003	30KTE20CL005	33UJH01038	M	H	SI	S 1E EMC	Y (2) Y (5) Y (6)
Level Sensor for Sump KTE20 BB004	30KTE20CL007	34UJH01026	M	H	SI	S 1E EMC	Y (2) Y (5) Y (6)
Level Sensor for Sump 30KTC30 BB001	30KTC30CL001	30UFA01042	M	H	SI	S 1E EMC	Y (2) Y (5) Y (6)
Level Sensor for Sump 30KTC30 BB002	30KTC30CL003	30UFA01097	M	H	SI	S 1E EMC	Y (2) Y (5) Y (6)
Level Sensor for Sump 30KTD10 BB001	30KTD10CL002	30UJB05003	M	M	SI	S 1E EMC	Y (5) Y (6)
Level Sensor for Sump 30KTC10 BB001	30KTC10CL001	30UJA11013	H	H	SI	S 1E EMC	Y (1) Y (5)
Level Sensor for Sump 30KTC10 BB001	30KTC10CL002	30UJA11013	H	H	SI	S 1E EMC	Y (1) Y (5)
Level Sensor for Sump 30KTC10 BB002	30KTC10CL005	30UJA11016	H	H	SI	S 1E EMC	Y (1) Y (5)

09.02.02-53

9.2.8 Safety Chilled Water System

The safety chilled water system (SCWS) supplies refrigerated chilled water to the safety-related heating, ventilation and air conditioning (HVAC) systems and the low head safety injection system (LHSI) pumps and motors in Safeguard Buildings (SB) 1 and 4 and the fuel building ventilation system (FBVS). The SCWS consists of four trains, numbered 1 to 4. Train 1 and Train 2 can be interconnected and Train 3 and Train 4 can be interconnected. ~~The SCWS consists of four separate and independent divisions, numbered 1 to 4.~~

9.2.8.1 Design Bases

09.02.02-53

The SCWS provides chilled water as a heat sink to the LHSI pumps and the safety-related HVAC systems, which in turn provides an acceptable environment for safety-related equipment and main control room (MCR) habitability in the event of a design basis accident (DBA) (GDC 44). The SCWS is classified as a safety-related system and has safety-related design functions. The system is designed Seismic Category I. Safety-related systems are required to function following a DBA and are required to achieve and maintain a safe shutdown condition.

09.02.02-53

- Each SCWS ~~division~~train is protected from the effects of natural phenomena, such as earthquakes, tornadoes, hurricanes, and floods (GDC 2). The SCWS are located in Seismic Category I Safeguard Buildings, which are designed to withstand the effects of earthquakes, tornadoes, hurricanes, floods, external missiles, and other natural phenomena.
- Each ~~division~~train remains functional and performs its intended functions for all postulated environmental conditions or dynamic effects, such as pipe breaks (GDC 4).
- Safety functions are performed assuming a single active component failure coincident with the loss of offsite power (GDC 44).
- The SCWS is not shared with any other plant unit (GDC 5).
- Active components of the SCWS ~~divisions~~trains are capable of being periodically tested and required inspections can be performed during plant operation (GDC 45 and GDC 46).

The SCWS ~~divisions~~trains use design and fabrication codes consistent with the safety classification and seismic design criteria provided in Section 3.2. The quality group classification meets the requirements of RG 1.26. The seismic design of the system components meets the guidance of RG 1.29. The power and control functions are designed in accordance with RG 1.32.

The SCWS operates continuously as described for the safety-related function when the plant is in normal conditions of startup, shutdown, power operation, and outages.

9.2.8.2 System Description

9.2.8.2.1 General Description

The SCWS consists of four ~~separate, physically separated independent divisions,~~trains numbered 1 to 4. Each is located in one of the four SBs. Each SCWS ~~division~~train is a closed loop system that supplies chilled cooling water for specified area HVAC air handling units (AHU) and, where required, process systems cooling. Each ~~division~~train consists of a refrigeration chiller unit, two pumps, expansion tank, user loads, and the associated piping and controls.

Normally, open motor operated cross-tie valves (MOV) interconnect the supply and return piping of Train 1 with Train 2, and the supply and return piping of Train 3 with Train 4. Each SCWS chiller is sized to meet the system load requirements of two divisional trains.

The SCWS provides chilled water to the HVAC cooling coils of the main control room (MCR), the electrical division rooms (SBVSE) in the SBs, SB controlled-area ventilation system (SBVS), ~~Fuel Building (FB) ventilation system (~~FBVS~~)~~, and the low head safety injection system (LHSI) pump motors in SB Divisions 1 and 4.

System design parameters are listed on Table 9.2.8-1—Safety Chill Water Design Parameters. The SCWS flow diagram is shown in Figure 9.2.8-1—Safety Chilled Water System Diagram.

09.02.02-53

Refer to Section 12.3.6.5.9 for safety chilled water system design features which demonstrate compliance with the requirements of 10 CFR 20.1406.

9.2.8.2.2 Component Description

The general description of the component design features for the SCWS is provided below. Refer to Section 3.2 for details of the seismic and system quality group classification of the SCWS.

Chilled Water Pumps

~~Two 100 percent SCWS pumps, with one in standby, in each of the four divisions circulates chilled water between the HVAC users and the evaporator of the chiller refrigeration unit in each division.~~Two SCWS pumps in each of the four trains circulate chilled water between the SCWS users and the evaporator of the chiller refrigeration unit in each division.

The required flow rate of each SCWS pump is defined by the heat to be removed from the system loads. As a minimum, the pumps are designed to fulfill the corresponding minimal required design mass flow rate under the following conditions:

- Fluctuations in the supplied electrical frequency.
- Increased pipe roughness due to aging and fouling.
- Fouled debris filters.
- Maximum pressure drop through the system heat exchangers.
- Minimum water level in the expansion tank considers net positive suction head to prevent cavitation of the SCWS pump and prevent vortex effects.

Determination of the discharge head of the pumps is based on dynamic pressure losses and head losses of the mechanical equipment of the associated SCWS at full load operation.

Air-Cooled Chiller Refrigeration Unit

SCWS, Divisions 1 and 4, each contain one ~~100 percent~~ air-cooled chiller refrigeration unit that functions to refrigerate chilled water to its design basis temperature of 41°F for supply to the ~~HVAC users~~system users. These chillers are located in dedicated rooms of the SBs. Each chiller contains a condenser, compressors, evaporator, and associated piping and controls. Environmentally safe refrigerants are used in these chillers.

09.02.02-53

Water-Cooled Chiller Refrigeration Unit

SCWS, Divisions 2 and 3, each contain one ~~100 percent~~ water-cooled chiller refrigeration unit that functions to refrigerate chilled water to its design bases temperature of 41°F for supply to the HVAC users. These chillers are located in dedicated rooms of the SBs. Each chiller contains a condenser, compressors, evaporator, and associated piping and controls. Environmentally safe refrigerants are used in these chillers.

Diaphragm Expansion Tank

Each SCWS division contains a diaphragm expansion tank with a nitrogen fill connection in each of the SBs. The expansion tank provides for changes in volume and establishes a point of reference pressure for the closed-loop system. These tanks are provided with overpressure protection.

09.02.02-53

Cooling Coils

Multiple HVAC cooling coils in each division receive chilled water for heat removal from selected HVAC users. The SCWS also cools Division 1 and Division 4 LHSI motor cooler and pump sealing cooler.

09.02.02-53

~~Safety~~Relief Valves

A ~~safety~~relief valve located in each SCWS division protects the chilled water closed loop against high pressure.

Chiller Bypass Valve

The chiller bypass valve installed in the ~~closed loop of each~~ operating SWCS ~~division~~train varies flow returning to the chiller to prevent freezing at the evaporator coil. Upstream filters are provided as a precaution to protect downstream control valves which contain internals sensitive to particle trapping.

Cross-Tie Valves

A cross-tie is established for normal operation between the supply and the return piping of each divisional pair (1/2 or 3/4) of SCWS trains that includes MOVs and associated controls. There are two isolation valves per division (one supply and one return) that are located in their respective Safeguards Buildings. The valves are divisionally powered. During normal operations the cross-tie isolation valves are normally open and only one chiller train is operating.

9.2.8.3 System Operation

9.2.8.3.1 Normal Operation

~~All four SCWS divisions supply chilled water to plant components when the plant is in power operation under normal conditions. Each of the four SBs is supplied by one of four divisions of the SCWS. Each SCWS division is designed with a closed single pumping loop and one refrigeration unit for chilled water production. Chilled water production and chilled water distribution are grouped together to form a single closed system.~~During normal operation, at least one train of the divisional pair is in operation. Either Train 1 or Train 2 chiller provides safety chilled water cooling for all SCW loads within Safeguard Building Divisions 1 and 2, and the FBVS. Likewise, the chiller from either Train 3 or 4 provides safety chilled water cooling for both Safeguard Divisions 3 and 4 and the associated FBVS load. During normal operation, the cross-tie isolation valves (supply and return for both divisions) are normally open. The non-operating chiller and pump(s) are maintained in standby. This configuration also allows for maintenance on the non-operating chiller and pump(s). If the normal operating train pump or chiller fails, a switchover sequence to the standby train is automatically initiated. A planned switchover of the operating train is manually initiated from the MCR.

~~Each of the four divisions has one SCWS pump in service and one in standby, to circulate the chilled water in a closed loop between the HVAC users and the evaporator of the refrigeration unit.~~ The chilled water distribution circuit operates

with a variable flow rate that is governed by the position of the control valves associated with supplied user loads. A regulated chilled water bypass line is provided between the refrigeration–evaporator outlet line and the return line to prevent freezing. A diaphragm expansion tank is used for equalization of pressure and volumetric expansion and helps maintain the requisite static system pressure. A ~~safety~~relief valve on the connecting line prevents the line design pressure from being exceeded. Piping voids associated with potential waterhammer are precluded by the constant pressure maintained in the nitrogen-charged expansion tank in each division.

09.02.02-53

A manually operated make up demineralized water supply is used when water loss resulting from operational measures (e.g., venting and draining) is indicated by an expansion tank pressure instrument.

The SCWS is treated with hydrazine in low concentration for corrosion control. Monitoring of the water chemistry is provided by means of local sampling ~~at the central chilled water station~~.

9.2.8.3.2 Abnormal Operation

~~In the event of a DBA, with one SCWS safety-related train down for maintenance, and in case of failure of a second SCWS safety-related train (e.g., refrigeration units or pumps), the back up is provided by the two remaining SCWS 100 percent trains of the corresponding divisions.~~In the event of a DBA with concurrent loss of offsite power (LOOP) the operating train of a divisional pair receives a "Start" signal to return the operating train to operation after load shed. If an active single failure occurs (assume either the EDG fails to start or the SCW train pump or chiller does not re-start), then the standby train receives a "Start" signal. This sequence confirms that one train of a divisional pair is operating. At or before the end of 24 hours post DBA, the cross-tie isolation valves are manually isolated to protect against a passive failure.

The SCWS is powered from the emergency diesel generators (EDG) and continues to function during a DBA. Divisions 1 and 4 of the SCWS provide a heat sink to ~~Division 1 and 4~~ system users and HVAC systems in the event of a severe accident or station blackout (SBO). Divisions 1 and 4 are powered from motor control centers that are re-powered by the station blackout diesels during an SBO event.

Under seismic or post-accident conditions, when demineralized water may be unavailable for SCWS makeup, a manual connection to the fire water distribution system is available to provide a seismic makeup source within a time frame consistent with the SCWS expansion tank capacity to accommodate expected out-leakage from the system for seven days.

A mechanical or electrical failure of the running SCWS pump results in a transfer to the standby pump.

Each refrigeration chiller in the four divisions of the SCWS has three 50 percent capacity compressors to provide sufficient operating redundancy and flexibility in the event of a compressor failure. The two remaining chiller compressors provide 100 percent capacity.

To allow divisional maintenance (e.g., maintenance on emergency diesel generators), the required SCWS safety-related components are alternately fed from the adjacent division to provide adequate cooling of certain safety-related components during a design basis event.

9.2.8.4 Safety Evaluation

- The SCWS is designed as Seismic Category I as described in Section 3.2 to operate in all plant modes of operation including design basis events. The SCWS divisions are located in SBs 1 to 4, respectively. The SBs are designed to withstand the effects of earthquakes, tornadoes, hurricanes, floods, external missiles, and other natural phenomena. Section 3.3, Section 3.4, Section 3.5, Section 3.7~~(B)~~, and Section 3.8 provide the bases for the adequacy of the structural design of these buildings.

09.02.02-53

- The SCWS is designed to remain functional after a safe shutdown earthquake. Section 3.7~~(B).2 and Section 3.9(B)~~ provide the design loading conditions that were considered. Section 3.5, Section 3.6, and Section 9.5.1 provide the hazards analyses to make sure that a safe shutdown, as outlined in Section 7.4, can be achieved and maintained.

- A four train design with interconnection of Train 1 and Train 2 or interconnection of Train 3 and Train 4 of the SCWS fulfills the single failure criteria. ~~Redundant safety systems (one per SB) are strictly separated within the SBs into four divisions. This divisional separation is provided for electrical and mechanical safety systems.~~ The four ~~divisions~~trains of safety-related systems are consistent with an N+2 safety concept. The four SCWS trains are backed up by the EDGs. Two of these trains, in Divisions 1 and 4, are also backed up by the SBO diesels.

- Structures, systems and components important to safety in the SCWS are not shared with any other co-located nuclear reactor units.

- Preoperational testing of the SCWS is performed as described in Chapter 14.0. Periodic inservice functional testing is done in accordance with Section 9.2.8.5.

- Section 6.6 provides the ASME Boiler and Pressure Vessel (BPV) Code, Section XI (Reference 1) requirements that are appropriate for the SCWS.

- Section 3.2 delineates the quality group classification and seismic category applicable to the safety-related portion of this system. Table 9.5.4-1 shows that the components meet the design and fabrication codes given in Section 3.2. All the power supplies and control functions necessary for safe function of the SCWS are Class IE, as described in Chapter 7 and Chapter 8.

- Cooling diversity is created between the load heat sinks of Divisions 1 and 4, and Divisions 2 and 3. Division 1 and 4 chillers are air cooled, and Division 2 and 3 chillers are water cooled by the component cooling water system (CCWS).

- A process radiation monitor is provided in Trains 1 and 4 of the SCWS, downstream of the LHSI pump mechanical seal heat exchanger to monitor for possible leakage of radioactive fluid from the heat exchanger. Otherwise, migration of radioactive material from potentially radioactive systems is prevented with a minimum of two heat exchanger barriers. Radiation monitors are in the CCWS to detect radioactive contamination entering and exiting the system.

9.2.8.5 Inspection and Testing Requirements

Prior to initial plant startup, a comprehensive performance test will be performed to verify that the design performance of the system and individual components is attained. Refer to Section 14.2, Test #052, for initial plant testing of the SCWS.

After the plant is brought into operation, periodic tests and inspections of the SCWS components and subsystems are performed to verify proper operation. Scheduled tests and inspections are necessary to verify system operability.

The installation and design of the SCWS provides accessibility for the performance of periodic inservice inspection and testing. Periodic inspection and testing of safety-related equipment verifies its structural and leak tight integrity and its availability and ability to fulfill its functions.

09.02.02-53

Inservice inspection and testing requirements are in accordance with Section XI of the ASME BPV Code and the ASME OM Code.

Section 3.9.6 and Section 6.6 describe the inservice testing and inspection requirements, respectively. Refer to Section 16.0, Surveillance Requirement (SR) 3.7.9 for surveillance requirements that verify continued operability of the SCWS.

9.2.8.6 Instrumentation Requirements

The SCWS system is controlled by the safety automation system (SAS). The normal indication, manual control, and alarm functions are provided by the process information and control system (PICS).

System pressure is monitored with the aid of two pressure measurements for each train. The two measurements are combined in one measuring point. If the pressure falls below a set limit, an alarm is issued for operators to check nitrogen charge or provide makeup with demineralized water.

If the system experiences excessive leakage in excess of system makeup capability, the cross-tie isolation MOVs close on Low-2 system pressure. The non-operating standby train automatically starts on Low-2 pressure. The train without excessive leakage

Next File

09.02.02-53

returns to pressure and the train with excessive leakage is manually stopped from the DCS.

If the pressure falls below a ~~second~~third set limit, one of the following measures is initiated automatically for the affected train:

- Chilled water system "Protection OFF" alarms.
- Refrigeration unit shuts down.
- Chilled water circulating pump shuts down.

A humidity sensor is installed in the nitrogen region of the diaphragm expansion tank. This sensor issues an alarm indicating a leaky diaphragm if humidity exceeds a set limit.

To provide a constant water flow through the evaporator for the refrigeration unit, a controlled bypass is implemented between chilled water feed and chilled water return by means of a control valve. The controlled variable is differential pressure across the chiller evaporator.

The affected chilled water system train is deactivated by a "Protection OFF" command in the case of the following faults:

- Pump failure.
- High differential pressure.
- Minimum pressure limit for the system.
- Emergency power condition–under-voltage shutdown.

9.2.8.7 References

1. ASME Boiler and Pressure Vessel Code, Section XI: "Rules for Inservice Inspection of Nuclear Power Plant Components," The American Society of Mechanical Engineers, 2004.

Figure 9.2.8-1—Safety Chilled Water System Diagram
Sheet 1 of 4

09.02.02-53

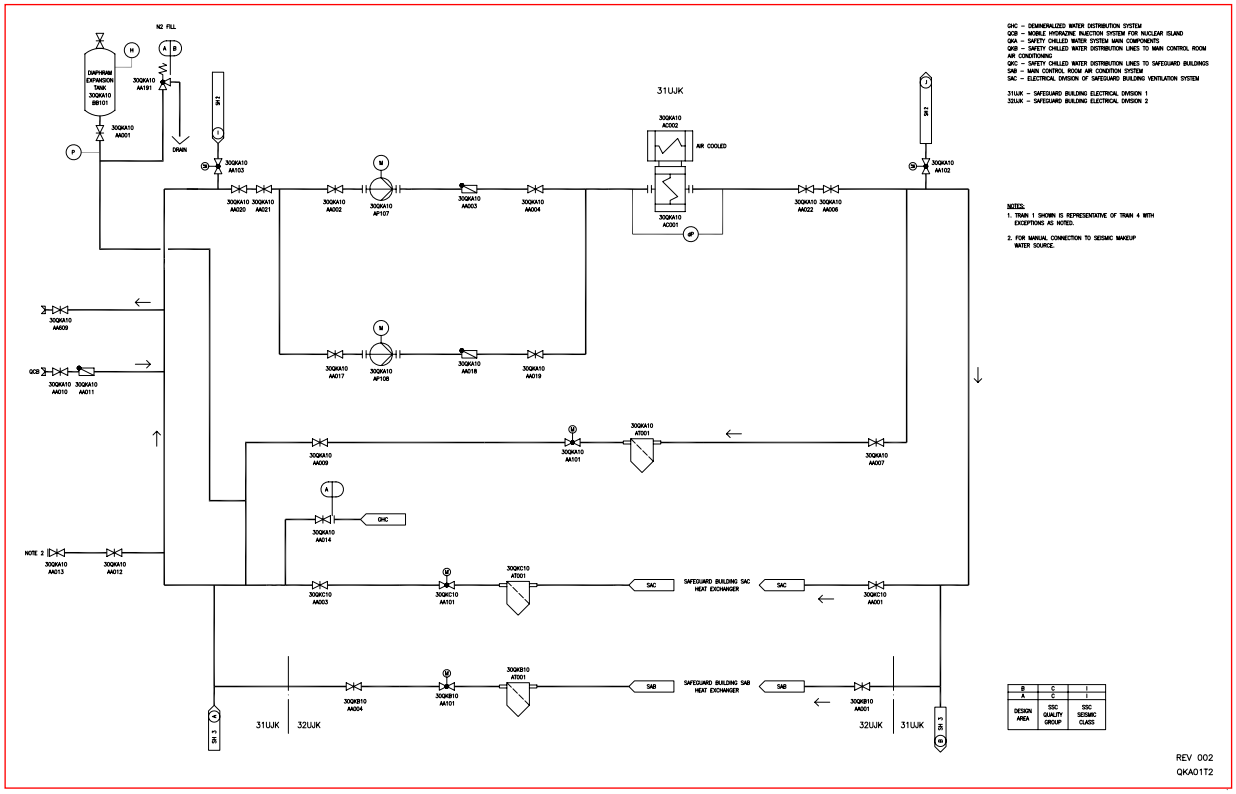

Figure 9.2.8-1—Safety Chilled Water System Diagram
Sheet 2 of 4

09.02.02-53

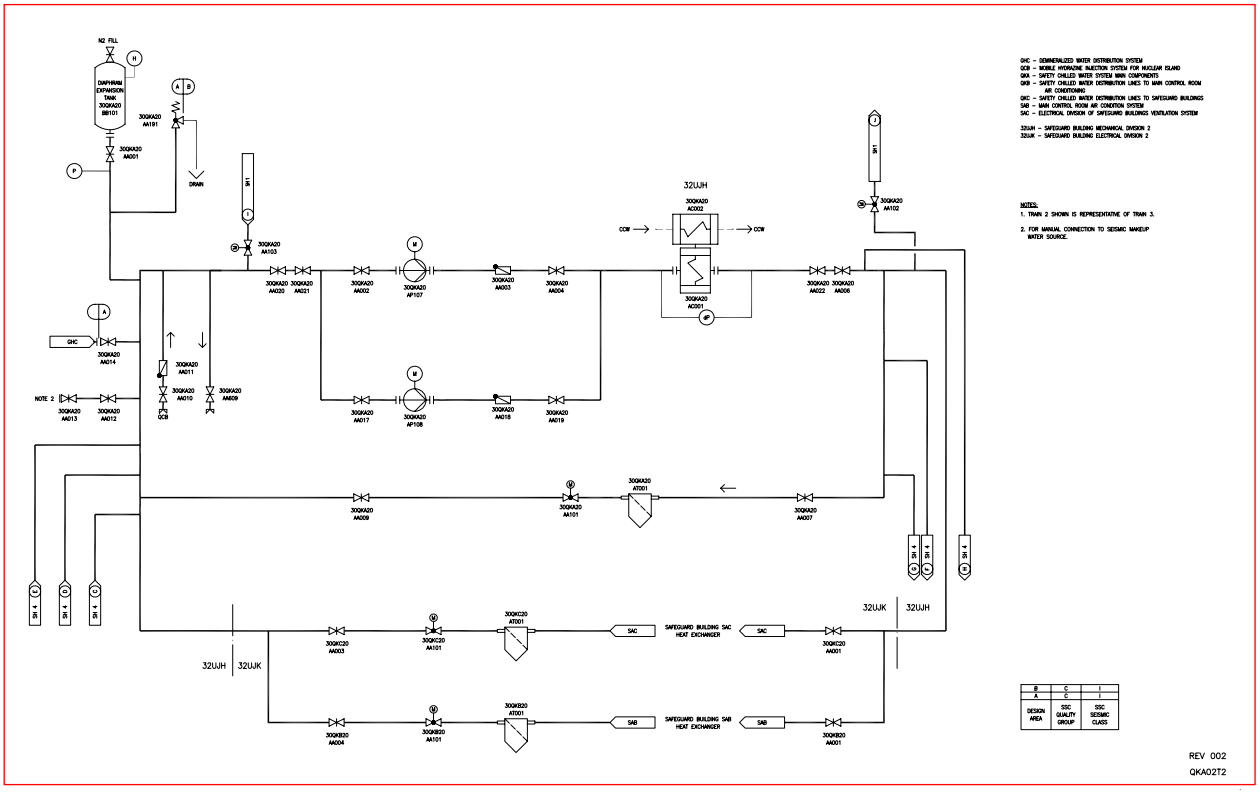

3.7 PLANT SYSTEMS

3.7.9 Safety Chilled Water (SCW) System

LCO 3.7.9 Four SCW trains shall be OPERABLE and in operation.

APPLICABILITY: MODES 1, 2, 3, and 4.

ACTIONS

----------NOTE----------
Enter applicable Conditions and Required Actions of LCO 3.4.6, "RCS Loops - MODE 4," for residual heat removal loops made inoperable by SCW System.

09.02.02-53

CONDITION	REQUIRED ACTION	COMPLETION TIME
A. One SCW train inoperable ~~or not in operation~~.	A.1 Restore SCW train to OPERABLE status ~~and in operation~~.	~~72 hours~~30 days
B. Required Action and associated Completion Time not met.	B.1 Be in MODE 3. AND B.2 Be in MODE 5.	6 hours 36 hours

SURVEILLANCE REQUIREMENTS

SURVEILLANCE	FREQUENCY
~~SR 3.7.9.1 Verify each SCW train is in operation.~~	~~24 hours~~

SURVEILLANCE REQUIREMENTS (continued)

09.02.02-53

SURVEILLANCE		FREQUENCY
SR 3.7.9.~~2~~1	----------NOTE---------- Isolation of SCW flow to individual components does not render the SCW System inoperable. ---------- Verify each SCW manual, power operated, and automatic valve in the flow path servicing safety related equipment, that is not locked, sealed, or otherwise secured in position, is in the correct position.	31 days
~~SR 3.7.9.3~~	~~Verify each SCW train has the capability to remove the design heat load.~~	~~24 months~~
SR 3.7.9.~~4~~2	Verify, on an actual or simulated loss of offsite power signal, each SCW train restarts following re-energization of the associated AC electrical power division.	24 months

B 3.7 PLANT SYSTEMS

B 3.7.9 Safety Chilled Water (SCW) System

BASES

BACKGROUND

The SCW System provides a heat sink for the removal of process and operating heat from safety related components during an anticipated operational occurrence (AOO) or postulated accident. During normal operation, and a normal shutdown, the SCW System also provides this function for the associated safety related systems. The safety related function is covered by this LCO.

The SCW System consists of four independent trains. Each train consists of a chiller refrigeration unit (three 50% compressors per unit), chilled water pumps (two 100% pumps), surge tank, piping, valving, and instrumentation. Normally open motor operated cross-tie valves interconnect the supply and return of Train 1 with Train 2 and interconnect the supply and return of Train 3 with Train 4. Each SCW System chiller is sized to meet the system load requirements of two divisional trains. Heat is rejected to the system chilled water as it passes through the cooling coils of the system users. This heat is rejected from the system as it is pumped through the train chiller refrigeration units. Trains 1 and 4 reject this energy to ambient via air cooled condensers while trains 2 and 3 have condensers cooled by the Component Cooling Water (CCW) System. Each refrigeration chiller in the four divisions of the SCWS has three 50 percent capacity compressors to provide sufficient operating redundancy and flexibility in the event of a compressor failure. The two remaining chiller compressors provide 100 percent capacity.

09.02.02-53

~~The SCW System is normally operating and cools the Control Room Air Conditioning System (CRACS), Safeguards Building Ventilation System Electrical Division (SBVSED), and the train 1 and 4 Low Head Safety Injection (LHSI) pump motor and seal coolers. The combined HVAC function of the SBVSED and SCW systems is backed by a non-safety related, 100% capacity maintenance train which is cooled by the Operational Chilled Water System.~~ During normal operation, at least one train of the divisional pair is in operation. Either Train 1 or Train 2 chiller provides safety chilled water cooling for all SCW loads within Safeguard Building Divisions 1 and 2, and the Fuel Building Ventilation System (FBVS). Likewise, the chiller from either Train 3 or 4 provides safety chilled water cooling for both Safeguard Divisions 3 and 4 and the associated FBVS load. During normal operation, the cross-tie isolation valves (supply and return for both divisions) are normally open. The non-operating chiller and pump(s) are maintained in standby. This configuration also allows for maintenance on the non-operating chiller and pump(s). If the normal operating train pump or chiller fails, a switchover

09.02.02-53

sequence to the standby train is automatically initiated. A planned switchover of the operating train is manually initiated from the MCR.

Following a loss of offsite power, previously running SCW trains return to operation once the emergency diesel generator is started and the associated AC electrical power division is re-energized. To allow divisional maintenance (e.g., maintenance on emergency diesel generators), the required SCWS safety-related components are alternately fed from the adjacent division to provide adequate cooling of certain safety-related components during a design basis event.

The SCW System operation is discussed in FSAR Section 9.2.8 (Ref. 1).

BASES

APPLICABLE SAFETY ANALYSES

09.02.02-53

The design basis of the SCW System is to provide chilled water as a heat sink for the ~~CRAC~~ Control Room Air Conditioning System and Safeguard Building Ventilation System Electrical Division safety-related HVAC Systems in addition to the LHSI pump motor and seal coolers ~~(train 1 and 4 only)~~. This supports maintaining an acceptable environment in the main control room (MCR) and for safety-related equipment in the essential rooms housing ~~e~~Electrical, Instrumentation and Control ~~System~~, Emergency Feedwater System, and CCW System equipment in the Safeguard Buildings as well as supporting the long term operation of the cooled LHSI pumps in the event of an AOO or postulated accident. Cooling of at least two ~~the~~ electrical ~~rooms~~ divisions is required~~s~~ ~~the availability of each train of SCW~~ in order to ensure the ability of the plant to meet all required safety related functions during any AOO or postulated accident.

A single active failure of a component of the SCW System, with a loss of offsite power, does not impair the ability of the system to perform its design function. The SCW System is designed in accordance with Seismic Category I requirements.

The SCW System satisfies Criterion 3 of 10 CFR 50.36(c)(2)(ii).

LCO

The SCW System consists of four trains. Four SCW trains are required to be OPERABLE to provide the required redundancy to ensure that the system functions to remove ~~post accident~~ heat loads for all events accompanied by a loss of offsite power and a single failure..

An SCW train is considered OPERABLE when one pump, surge tank, the chiller refrigeration unit with ~~two~~ multiple compressors, associated piping, valves, and instrumentation and controls required to perform the safety related function are OPERABLE ~~and in operation~~.

APPLICABILITY

In MODES 1, 2, 3, and 4, the SCW System is a normally operating system that is required to support the OPERABILITY of the equipment serviced by the SCW System and required to be OPERABLE in these MODES.

In MODES 5 and 6, the OPERABILITY requirements of the SCW System are determined by the systems it supports.

BASES

ACTIONS

A.1

If one SCW train is inoperable, action must be taken to restore ~~to~~ OPERABLE status within ~~72 hours~~30 days. In this condition, the three remaining OPERABLE SCW trains are adequate to perform the heat removal function~~. However, the overall reliability is reduced because a single failure in one of the OPERABLE ESW train could result in loss of SCW System function~~ for continued operation and for postulated accidents.

The ~~72 hour~~30 day Completion Time is based on the redundant capabilities afforded by the three OPERABLE trains, and the low probability of a postulated accident occurring during this time period.

09.02.02-53

B.1 and B.2

If the SCW train cannot be restored to OPERABLE status within the associated Completion Time, the unit must be placed in a MODE in which the LCO does not apply. To achieve this status, the unit must be placed in at least MODE 3 within 6 hours and in MODE 5 within 36 hours.

The allowed Completion Times are reasonable, based on operating experience, to reach the required unit conditions from full power conditions in an orderly manner and without challenging unit systems.

SURVEILLANCE REQUIREMENTS

SR 3.7.9.1

~~This SR requires verification every 24 hours that each SCW train is in operation. Verification includes flow rate, temperature, or pump status monitoring, which helps ensure that forced flow is providing heat removal. The Frequency of 24 hours is sufficient considering other indications and alarms available to the operator in the control room to monitor SCW train performance.~~

~~SR 3.7.9.2~~

This SR is modified by a Note indicating that the isolation of the SCW components or systems may render those components inoperable, but does not affect the OPERABILITY of the SCW System.

BASES

SURVEILLANCE REQUIREMENTS (continued)

Verifying the correct alignment for manual, power operated, and automatic valves in the SCW flow path provides assurance that the proper flow paths exist for SCW System operation. This SR does not apply to valves that are locked, sealed, or otherwise secured in position, since they are verified to be in the correct position prior to being locked, sealed, or secured. This SR does not require any testing or valve manipulation; rather, it involves verification that those valves capable of being mispositioned are in the correct position. This SR does not apply to valves that cannot be inadvertently misaligned, such as check valves.

The 31 day Frequency is based on engineering judgment, is consistent with the procedural controls governing valve operation, and ensures correct valve positions.

09.02.02-53

~~SR 3.7.9.3~~

~~This SR verifies that the heat removal capability of the system is sufficient to remove the heat load assumed in the control room heat load calculation. This SR consists of a combination of testing and calculations. The 24 month Frequency is appropriate since significant degradation of the SCW system is slow and is not expected over this time period.~~

SR 3.7.9.~~4~~2

This SR verifies proper automatic operation of the SCW train on an actual or simulated actuation signal. The SCW System is a normally operating system that cannot be fully actuated as part of routine testing during normal operation. The 24 month Frequency is based on the need to perform this Surveillance under the conditions that apply during a unit outage. Operating experience has shown that these components usually pass the Surveillance when performed at the 24 month Frequency. Therefore, the Frequency is acceptable from a reliability standpoint.

REFERENCES

1. FSAR Section 9.2.8.

Table 19.1-5—Systems Analyzed in U.S. EPR PRA
Sheet 4 of 4

09.02.02-53

System	Comment
Safety chilled water system	• Four ~~independent~~ divisions, each housed within separate SB • Provides cooling to the SB HVAC, that includes cooling to ac and dc switchgear rooms and EFW pump rooms. ~~and Control Room HVAC systems and direct room cooling to the EFW pump rooms.~~ • Trains 1 and 4 of Safety Chilled Water are air-cooled whereas trains 2 and 3 are cooled by the CCW ~~CHs~~common headers. • Trains 1 and 4 provide direct cooling to the LHSI pumps, such that these pumps are supported during a loss of CCW or ESW
Instrumentation & control systems	• Digital I&C systems for different functions (RPS, ESFAS, actuation and control of other safety and non-safety systems)