Unofficial Text (See Printed Volume). Current through date and Register shown on Title Page.

Chapter DHS 157
RADIATION PROTECTION

Subchapter I — General Provisions
DHS 157.01 Authority and purpose.
DHS 157.02 Applicability.
DHS 157.03 Definitions.
DHS 157.04 Exemptions from the regulatory requirements.
DHS 157.05 Prohibitions.
DHS 157.06 General regulatory requirements.
Subchapter II — Licensing of Radioactive Material
DHS 157.09 Exemptions.
DHS 157.10 License types and fees.
DHS 157.11 General licenses.
DHS 157.12 Registration of generally licensed devices.
DHS 157.13 Specific licenses.
DHS 157.14 Reciprocity.
DHS 157.15 Financial assurance and records for decommissioning.
Subchapter III — Standards for Protection from Radiation
DHS 157.20 Implementation.
DHS 157.21 Radiation protection programs.
DHS 157.22 Occupational dose limits.
DHS 157.23 Radiation dose limits for individual members of the public.
DHS 157.24 Testing for leakage or contamination of sealed sources.
DHS 157.25 Surveys and monitoring.
DHS 157.26 Control of exposure from external sources in restricted areas.
DHS 157.27 Respiratory protection and controls to restrict internal exposure in restricted areas.
DHS 157.28 Storage and control of licensed or registered sources of radiation.
DHS 157.29 Precautionary procedures.
DHS 157.30 Waste management.
DHS 157.31 Records.
DHS 157.32 Reports.
DHS 157.33 Radiological criteria for license termination.
Subchapter IV — Radiation Safety Requirements for Industrial Radiographic Operations
DHS 157.35 Exemptions.
DHS 157.36 Performance requirements for industrial radiography equipment.
DHS 157.37 Radiation safety requirements for storage containers and source changers.
DHS 157.38 Radiation survey instruments.
DHS 157.39 Leak testing and replacement of sealed sources.
DHS 157.40 Quarterly inventory.
DHS 157.41 Inspection and maintenance of radiation machines, radiographic exposure devices, transport and storage containers, associated equipment, source changers and survey instruments.
DHS 157.42 Permanent radiographic installations.
DHS 157.43 Labeling, transportation and storage.
DHS 157.44 Operational radiation safety requirements.
DHS 157.45 Recordkeeping requirements.
DHS 157.46 Notifications.
DHS 157.47 Reciprocity.
DHS 157.48 Specific requirements for radiographic personnel performing industrial radiography.
Subchapter V — Radiation Safety Requirements for Well Logging
DHS 157.51 Prohibition.

Unofficial Text (See Printed Volume). Current through date and Register shown on Title Page.

DHS 157.52 Equipment control.
DHS 157.53 Requirements for personnel safety.
DHS 157.54 Precautionary procedures.
DHS 157.55 Radiation surveys and records.
DHS 157.56 Notification of incidents, abandonment and lost sources.
Subchapter VI — Medical Use of Radioactive Material
DHS 157.59 General requirements.
DHS 157.61 Administrative requirements.
DHS 157.62 Technical requirements.
DHS 157.63 Unsealed radioactive material – written directive not required.
DHS 157.64 Unsealed radioactive material − written directive required.
DHS 157.65 Manual brachytherapy.
DHS 157.66 Sealed sources for diagnosis.
DHS 157.67 Photon emitting remote afterloader, teletherapy and gamma stereotactic radiosurgery units.
DHS 157.68 Radioactive drugs for medical use.
DHS 157.70 Other medical uses of radioactive material or radiation from radioactive material.
DHS 157.71 Records.
DHS 157.72 Reports.
Subchapter VII — Radiation Safety Requirements for Irradiators
DHS 157.73 Radiation safety requirements.
Subchapter VIII — X−ray Device Requirements
DHS 157.74 Administrative requirements.
DHS 157.75 General requirements for all diagnostic x−ray systems.
DHS 157.76 Fluoroscopic equipment.
DHS 157.77 General purpose radiographic systems.
DHS 157.78 Intraoral dental radiographic systems.
DHS 157.79 Veterinary medicine x−ray systems.
DHS 157.80 Computed tomography x−ray systems.
DHS 157.81 Shielding plan review.
DHS 157.82 General administrative requirements for facilities using therapeutic radiation machines for human use.
DHS 157.83 Administrative policies and procedures for radiation therapy machines.
DHS 157.84 Technical requirements for facilities using therapeutic radiation machines.
DHS 157.85 Therapeutic radiation machines.
DHS 157.86 Registration of radiation machine facilities.
Subchapter IX — Cabinet and Analytical X−ray Systems
DHS 157.87 Radiation safety requirements.
Subchapter X — Notices, Instructions and Reports to Workers
DHS 157.88 Posting, notification and reporting requirements.
Subchapter XI — Inspection by the Department
DHS 157.89 Inspection requirements.
Subchapter XII — Enforcement
DHS 157.90 Violation and penalty criteria.
DHS 157.91 Notices, orders, reviews and appeals.
Subchapter XIII — Transportation
DHS 157.92 General regulatory provisions.
DHS 157.93 General licenses.
DHS 157.94 Operating controls and procedures.
Subchapter XIV — Radioactivity in Community Water Systems
DHS 157.95 Exemptions.
DHS 157.96 Requirements.

Unofficial Text (See Printed Volume). Current through date and Register shown on Title Page.

Note: Chapter HSS 157 as it existed on July 31, 2002 was repealed and a new chapter DHS 157 was created effective August 1, 2002, except subchapters II, VI and VII will go into effect 30 days after signature by the Governor of an agreement transferring regulatory authority to the state. **Chapter DHS 157 was renumbered chapter DHS 157 under s. 13.92 (4((b) 1., Stats., and corfrections made under s. 13.92 (4) (b) 7., Stats., Register January 2009 No. 637.**

Subchapter I — General Provisions

DHS 157.01 Authority and purpose. (1) This chapter is promulgated under the authority of ss. 254.31 to 254.45, Stats. to regulate the receipt, use, transfer, possession, ownership or acquisition of any source of radiation. The standards in this chapter generally conform to nationally accepted standards for protection against the harmful effects of ionizing radiation. The publications referenced in this chapter are available for inspection at the department, the secretary of state's office, the legislative reference bureau and at the respective federal agency or organization website.

(2) Subchapter I establishes the definitions used in this chapter, prohibitions and general regulatory requirements.

(3) Subchapter II establishes requirements for the licensing of radioactive material, license fee schedules, registration requirements for certain types of devices purchased under a general license and reciprocity requirements.

(4) Subchapter III establishes standards for protection against ionizing radiation resulting from activities conducted under a license or registration issued by the department. The requirements of subch. III are designed to control the receipt, possession, use, transfer and disposal of sources of radiation by any licensee or registrant so that the total dose to an individual, including doses resulting from all sources of radiation other than background radiation, does not exceed the standards for protection against radiation prescribed in subch. III. However, nothing in subch. III limits actions the department may take to protect health and safety in an emergency.

(5) Subchapter IV establishes radiation safety requirements for persons using sources of radiation in industrial radiography.

(6) Subchapter V establishes radiation safety requirements for using sources of radiation for well logging including mineral−logging, radioactive markers and subsurface tracer studies. The requirements of subch. V are in addition to the requirements of subchs. I, II, III, VIII and X.

(7) Subchapter VI establishes requirements for the medical use of radioactive material. The requirements provide for the radiation safety of workers, the general public and human research subjects.

(8) Subchapter VII establishes radiation safety requirements for operating irradiators that use sealed sources containing radioactive material to irradiate objects or materials using gamma radiation.

(9) Subchapter VIII establishes requirements for the use of diagnostic or therapeutic x−ray equipment, including accelerators, by or under the supervision of an individual authorized and licensed by state statutes to engage in the healing arts or veterinary medicine; and to establish registration requirements for radiation machines.

(10) Subchapter IX establishes radiation safety requirements for the use of cabinet and analytical x−ray systems.

(11) Subchapter X establishes requirements for persons licensed or registered under this chapter to provide workers with notices, instructions and reports relating to activities under a license or registration.

(12) Subchapter XI establishes options available to facilities and individuals in connection with department inspections to determine compliance with the provisions of this chapter and radiological working conditions or other requirements specified in a license.

(13) Subchapter XII establishes classification and fiscal penalty criteria for violations of license conditions, emergency orders or the requirements of this chapter; and criteria for requesting and scheduling hearings to contest department assessments of forfeiture, licensing actions or emergency orders.

(14) Subchapter XIII establishes requirements for the packaging, preparation for shipment and transportation of radioactive material.

(15) Subchapter XIV establishes radioactivity requirements for community water systems.

History: CR 01−108: cr. Register July 2002 No. 559, eff. 8−1−02; corrections in (16) made under s. 13.93 (2m) (b) 7., Stats., Register July 2002 No. 559; **CR 06−021: am. (6), r. (16) Register October 2006 No. 610, eff. 11−1−06; correction made to (1) under s. 13.92 (4) (b) 6., Stats.**

DHS 157.02 Applicability.

Unofficial Text (See Printed Volume). Current through date and Register shown on Title Page.

(1) Except as specified, this chapter applies to all persons who receive, possess, use, transfer, own or acquire any source of radiation, except that nothing in this chapter shall apply to any person subject to regulation by the U.S. nuclear regulatory commission.
(2) A licensee subject to the requirements of subch. II is also subject to the requirements of subchs. I, III, X and XIII.
(3) Subchapter III applies to all persons licensed or registered by the department to receive, possess, use, transfer or dispose of sources of radiation. The limits in subch. III do not apply to doses due to background radiation, to exposure of patients to radiation for the purpose of medical diagnosis or therapy, or to voluntary participation in medical research programs.
(4) The requirements of subch. IV are for industrial radiography operations and are in addition to the requirements of subchs. I, II, III, VIII, X, XI, XII, and XIII.
(5) Subchapter V applies to all licensees or registrants who use sources of radiation for well logging including mineral−logging, radioactive markers and subsurface tracer studies. The requirements of subch. V are in addition to the requirements of subchs. I, II, III, VIII, X, XI, XII and XIII.
(6) Subchapter VI applies to all persons using radioactive material in the healing arts. The requirements of subch. VI are in addition to the requirements of subchs. I, II, III, X, XI, XII and XIII.
(7) Subchapter VII applies to panoramic irradiators having either dry or wet storage of the radioactive sealed sources and to underwater irradiators in which both the source and the product being irradiated are submerged. Irradiators whose dose rates exceed 5 grays (500 rads) per hour at one meter from the radioactive sealed sources in air or in water, as applicable for the irradiator type, are covered by subch. VII. Nothing in subch. VII relieves a licensee from complying with other federal, state and local regulations governing the siting, zoning, land use and building code
requirements for industrial facilities. Subchapter VII does not apply to self–contained dry–source–storage irradiators in which both the source and the area subject to irradiation are contained within a device and are not accessible by personnel, medical radiology or teletherapy, radiography for the irradiation of materials for nondestructive testing purposes, gauging or open–field, agricultural irradiations. The requirements of subch. VII are in addition to the requirements of subchs. I, II, III, X, XI, XII and XIII.
(8) Subchapter VIII applies to all persons registered to use x−ray devices. The requirements of subch. VIII are in addition to the requirements of subchs. I, III, X, XI and XII.
(9) Subchapter IX applies to all persons registered to use cabinet and analytical x−ray devices. The requirements of subch. IX are in addition to the requirements of subchs. I, III, VIII, X, XI and XII.
(10) The requirements of subch. X apply to all persons who receive, possess, use, own or transfer sources of radiation registered with or licensed by the department under subchs. II and VIII of this chapter.
(11) Subchapter XI applies to all persons who receive, possess, use, own or transfer radioactive materials or radiation producing machines licensed by or registered with the department.
(12) Subchapter XII applies to all persons who possess, use, store, transfer or receive radioactive materials, or who possess radiation machines.
(13) Subchapter XIII applies to any person who transports radioactive material or delivers radioactive material to a carrier for transport.
(14) The radioactivity requirements in subch. XIV apply to all community water systems, except those meeting all of the conditions of s. DHS 157.95.
History: CR 01−108: cr. Register July 2002 No. 559, eff. 8−1−02; **CR 06−021: am. (4) to (7) and (10), r. (15) Register October 2006 No. 610, eff. 11−1−06**.

DHS 157.03 Definitions. In this chapter:
(1) "A1" means the maximum activity of special form radioactive material permitted in a Type A package. This value is either listed in Table VI and Table VIII in Appendix O or may be derived under the procedures prescribed in Appendix O.
(2) "A2" means the maximum activity of radioactive material, other than special form material, LSA and SCO material, permitted in a Type A package. This value is either listed in Table VI and Table VIII in Appendix O or may be derived under the procedures prescribed in Appendix O.
(3) "Absorbed dose or "D" means the energy imparted by ionizing radiation per unit of mass of irradiated material. The units of absorbed dose are the rad and the gray (Gy).
(4) "Absorbed dose rate" means absorbed dose per unit time, for machines with timers, or dose monitor unit per unit time for accelerators.

Unofficial Text (See Printed Volume). Current through date and Register shown on Title Page.

(5) "Accelerator" means any machine capable of accelerating electrons, protons, deuterons or other charged particles in a vacuum and of discharging the resultant particle or other radiation into a medium at energies usually in excess of one MeV. Particle accelerator is considered an equivalent term.
(6) "Accelerator−produced radioactive material" means any material made radioactive by an accelerator.
(7) "Accessible surface" means surface of equipment or of an equipment part, housing or enclosure of the radiation producing machine that may be easily or accidentally touched by persons without the use of a tool.
(8) "Act" means ss. 254.31 to 254.45, Stats.
(9) "Activity" means the rate of disintegration or transformation or decay of radioactive material. The units of activity are the becquerel and the curie.
(10) "Added filtration" means any filtration which is in addition to the inherent filtration.
(11) "Address of use" means the building or buildings that are identified on the license and where radioactive material may be received, used or stored.
(12) "Adult" means an individual 18 or more years of age.
(13) "Agreement state" means any state with which the U.S. nuclear regulatory commission or the U.S. atomic energy commission has entered into an effective agreement under subsection 274b of the atomic energy act of 1954, as amended.
(14) "Air−purifying respirator" means a respirator with an air−purifying filter, cartridge, or canister that removes specific air contaminants by passing ambient air through the air−purifying element.
(15) "Airborne radioactive material" means any radioactive material dispersed in the air in the form of dusts, fumes, particulates, mists, vapors or gases.
(16) "Airborne radioactivity area" means a room, enclosure or area in which airborne radioactive materials, composed wholly or partly of licensed material, exist in concentrations that meet either of the following criteria:
(a) In excess of the derived air concentrations specified in Appendix E, table I.
(b) An individual present in the area without respiratory protective equipment could exceed, during the hours an individual is present in a week, an intake of 0.6% of the annual limit on intake or 12 DAC−hours.
(17) "Air kerma" or "K" means the sum of the initial kinetic energies of all the charged ionizing particles liberated by uncharged ionizing particles per unit mass of air. Kerma is determined as the quotient of dE divided by dM, where dE is the sum of the initial kinetic energies of all the charged ionizing particles liberated by uncharged ionizing particles in air of mass dM. The SI unit of air kerma is joule per kilogram and the special name for the unit of kerma is the gray.
(17m) "Air kerma rate" means the air kerma per unit time.
(18) "Alarming ratemeter" means a radiation measurement device that may be set to alarm at a pre−set dose rate.
(19) "Alert" means an event may occur, is in progress, or has occurred that could lead to a release of radioactive material but that the release is not expected to require a response by offsite response organizations to protect people offsite.
(20) "Alignment helmet" means a guide placed on the head that directs radiation to a specific site during stereotactic surgery.
(21) "Aluminum equivalent" means the thickness of type 1100 aluminum alloy affording the same attenuation, under specified conditions, as the material in question.
Note: The nominal chemical composition of type 1100 aluminum is 99.00 percent minimum aluminum and 0.12% copper.
(22) "Analytical x−ray system" means x−ray equipment designed to analyze the composition of materials.
(23) "Annual refresher safety training" means a review conducted or provided by the licensee or registrant for its employees on radiation safety aspects of industrial radiography.
(24) "Annual limit on intake" or "ALI" means the derived limit for the amount of radioactive material taken into the body of an adult worker by inhalation or ingestion in a year. Annual limit on intake is the smaller value of intake of a given radionuclide in a year by the reference person that would result in a committed effective dose equivalent of 0.05 Sv (5 rem) or a committed dose equivalent of 0.5 Sv (50 rem) to any individual organ or tissue.
Note: Annual limit on intake values for intake by ingestion and by inhalation of selected radionuclides are given in table I, columns 1 and 2, of Appendix E.
(25) "ANSI" means the American National Standards Institute.
(26) "Area of use" means a portion of an address of use that has been set aside for the purpose of receiving, using or storing radioactive material.

Unofficial Text (See Printed Volume). Current through date and Register shown on Title Page.

(27) "As low as is reasonably achievable" or "ALARA" means making every reasonable effort to maintain exposures to radiation as far below the dose limits in this chapter as is practical, consistent with the purpose for which the licensed or registered activity is undertaken, taking into account the state of technology, the economics of improvements in relation to state of technology, the economics of improvements in relation to benefits to the public health and safety and other societal and socioeconomic considerations, and in relation to utilization of nuclear energy and licensed or registered sources of radiation in the public interest.
(28) "Assembler" means any person engaged in the business of assembling, replacing or installing one or more components into an x−ray system or subsystem. The term includes the owner of an x−ray system or his or her employee or agent who assembles components into an x−ray system that is subsequently used to provide professional or commercial services.
(29) "Assigned Protection Factor" or "APF" means the expected workplace level of respiratory protection that would be provided by a properly functioning respirator or a class of respirators to properly trained and fitted users. Operationally, the inhaled concentration may be estimated by dividing the ambient airborne concentration by the APF.
(30) "Associated equipment" means equipment that is used in conjunction with a radiographic exposure device to make radiographic exposures that drives, guides or comes in contact with the source.
Note: Examples of associated equipment include a guide tube, control tube, control cable, removable source stop, "J" tube and collimator when used as an exposure head.
(31) "Atmosphere−supplying respirator" means a respirator that supplies the respirator user with breathing air from a source independent of the ambient atmosphere, and includes supplied− air respirators and self−contained breathing apparatus units.
(32) "Attenuation block" means a block or stack of type 1100 aluminum alloy, or aluminum alloy having equivalent attenuation, with dimensions 20 centimeters by 20 centimeters or larger by 3.8 centimeters that is large enough to intercept the entire x−ray beam.
(32m) "Authorized medical physicist" means an individual who has any of the following qualifications:
(a) Meets the training requirements in s. DHS 157.61 (8) (a) and (11).
(b) Is identified as an authorized medical physicist on a specific medical use license or equivalent permit issued by the department, NRC or another agreement state.
(c) Is identified as an authorized medical physicist on a permit issued by the department, NRC or another agreement state specific medical use licensee of broad scope that is authorized to permit the use of radioactive material.
(33) "Authorized nuclear pharmacist" means a pharmacist licensed by the state under ch. 450, Stats., and who fulfills at least one of the following:
(a) Meets the requirements in s. DHS 157.61 (9) (a) and (11).
(b) Is identified as an authorized nuclear pharmacist on a nuclear regulatory commission or agreement state license or other equivalent permit or license recognized by the NRC that authorizes the medical use of radioactive material or the practice of nuclear pharmacy.
(c) Is identified as an authorized nuclear pharmacist on a permit issued by an NRC or agreement state specific licensee of broad scope that is authorized to permit the medical use of radioactive material or the practice of nuclear pharmacy.
(d) Is approved as an authorized nuclear pharmacist by a nuclear pharmacy authorized by the NRC or an agreement state to approve authorized nuclear pharmacists.
(34) "Authorized user" means a state licensed person engaged in the healing arts who fulfills at least one of the following: (a) Meets the recentness of training requirements in s. DHS 157.61 (11) and the certification requirement, depending upon the desired use of the radioactive material, found in any of the following:

1. Section DHS 157.63 (4) (a).
2. Section DHS 157.63 (5) (a).
3. Section DHS 157.64 (4) (a).
4. Section DHS 157.64 (5) (a).
5. Section DHS 157.64 (6) (a).
6. Section DHS 157.65 (8) (a).
7. Section DHS 157.66 (2) (a).
8. Section DHS 157.67 (17) (a).

(b) Is identified as an authorized user on a nuclear regulatory commission or agreement state license or other equivalent permit or license recognized by the NRC that authorizes the medical use of radioactive material.

Unofficial Text (See Printed Volume). Current through date and Register shown on Title Page.

(c) Is identified as an authorized user on a permit issued by a nuclear regulatory commission or agreement state specific licensee of broad scope that is authorized to permit the medical use of radioactive material.

(35) "Automatic exposure control" or "AEC" means a device that automatically controls one or more technique factors to obtain at a preselected location a required quantity of radiation.

Note: Examples of an automatic exposure control includes devices such as phototimers and ion chambers.

(36) "Autoradiograph" means a radiographic image created by placing a sealed source on radiographic film to directly expose the film.

(37) "Background radiation" means radiation from cosmic sources, naturally occurring radioactive materials, including radon, except as a decay product of source or special nuclear material and including global fallout as it exists in the environment from the testing of nuclear explosive devices or from past nuclear accidents such as Chernobyl that contribute to background radiation and are not under the control of a licensee or registrant. "Background radiation" does not include sources of radiation from radioactive materials regulated by the department.

(38) "Barrier" means a device or material used to restrict access to an area.

(39) "Beam axis" means a line from the source through the centers of the radiation fields.

(40) "Beam monitoring system" means a system designed and installed in the radiation head to detect and measure the radiation present in the useful beam.

(41) "Beam scattering foil" means a thin piece of material, usually metallic, placed in the beam to scatter a beam of electrons to provide a more uniform electron distribution in the useful beam.

(42) "Beam−limiting device" means a field defining collimator that provides a means to restrict the dimensions of the useful beam to the desired dimensions.

(43) "Becquerel" or "Bq" means the SI unit of activity. One becquerel equals one disintegration or transformation per second. The special unit of decay is the curie and is being replaced by the becquerel.

(44) "Bent beam linear accelerator" means a linear accelerator geometry in which the accelerated electron beam must change direction by passing through a bending magnet.

(45) "Bioassay" means the determination of kinds, quantities or concentrations and, in some cases, the locations of radioactive material in the human body, whether by direct measurement, in vivo counting or by analysis and evaluation of materials excreted or removed from the human body.

(46) "Brachytherapy" means a method of radiation therapy in which sources are used to deliver a radiation dose at a distance of up to a few centimeters by surface, intracavitary or interstitial application.

(47) "Brachytherapy source" means a radioactive material or a manufacturer−assembled material train or a combination of these materials.

(48) "Broad scope license" means a specific license authorizing receipt, acquisition, ownership, possession, use and transfer of any chemical or physical form of up to multi−curie quantities of radioactive material, including the establishment of administrative procedures that assure control of procurement and safe use of radioactive materials.

Note: Section DHS 157.13 (3) (b) describes the different types of broad scope licenses.

(49) "Buffer zone" means a portion of a disposal site that is controlled by the licensee that lies under the disposal units and is between the disposal units and the site boundary.

(50) "Byproduct material" means ~~either~~ any of the following:

(a) Any radioactive material, except special nuclear material, yielded in or made radioactive by exposure to the radiation incident to the process of producing or ~~utilizing~~ using special nuclear material.

(b) The tailings or wastes produced by the extraction or concentration of uranium or thorium from ore processed primarily for its source material content, including discrete surface wastes resulting from uranium or thorium solution extraction processes. Underground ore bodies depleted by these solution extraction operations do not constitute "byproduct material" within this definition.

(c) Any discrete source of radium-226 that has been produced, extracted or converted after extraction, for use for a commercial, medical or research activity.

(d) Any material that has been made radioactive by use of a particle accelerator, and is produced , extracted, or converted after extraction, for use for a commercial, medical or research activity.

(e) Any discrete source of naturally occurring radioactive material, other than source material, that the NRC, in consultation with the Administrator of the Environmental Protection Agency, the Secretary of Energy, the Secretary of Homeland Security, and the head of any other appropriate federal agency, determines would pose a threat similar to the threat posed by a discrete source of radium-226 to the public health and safety or the common defense and security, and is extracted or converted after extraction for use in a commercial, medical or research activity.

Unofficial Text (See Printed Volume). Current through date and Register shown on Title Page.

(51) "Cabinet radiography" means industrial radiography conducted in an enclosure or cabinet so shielded that every location on the exterior meets the dose limits for individual members of the public as specified in s. DHS 157.23 (1).

(52) "Cabinet x−ray system" means an x−ray system, manufactured under the requirements of 21 CFR 1020.40, with an x−ray tube installed in an enclosure that is independent of existing architectural structures except the floor. The cabinet x−ray system is intended to contain at least that portion of a material being irradiated, provide radiation attenuation and exclude personnel from its interior during generation of radiation. "Cabinet x−ray system" includes x−ray systems designed primarily for the inspection of carry−on baggage at airline, railroad and bus terminals and in similar facilities. An x−ray tube used within a shielded part of a building or x−ray equipment that may temporarily or occasionally incorporate portable shielding is not considered a cabinet x−ray system.

(53) "Calendar quarter" means a period of time equal to one− fourth of the year observed by the licensee or registrant, providing that the beginning of the first quarter in a year coincides with the starting date of the year and that no day is omitted or duplicated in consecutive quarters.

Note: A calendar quarter is approximately 13 consecutive weeks.

(54) "C−arm x−ray system" means an x−ray system in which the image receptor and x−ray tube housing assembly are connected by a common mechanical support system to maintain a desired spatial relationship. The system allows the operator to change the projection of the beam through the patient without changing the position of the patient.

(55) "Calibration" means determining either of the following:

(a) The response or reading of an instrument relative to a series of known radiation values over the range of the instrument.

(b) The strength of a source of radiation relative to a standard.

(56) "Carrier" means a person engaged in the transportation of passengers or property by land or water as a common, contract or private carrier or by civil aircraft.

(57) "Cephalometric device" means a device intended for the radiographic visualization and measurement of the dimensions of the human head.

(57g) "Certificate holder" means a person who has been issued a certificate of compliance or other package approval by the U.S. nuclear regulatory commission.

(57r) "Certificate of Compliance" or "CoC" means the certificate issued by the U.S. nuclear regulatory commission under subpart D of 10 CFR 71 which approves the design of a package for the transportation of radioactive material.

(58) "Certified components" means components of x−ray systems subject to 21 CFR 1010.2.

(59) "Certified system" means any x−ray system that has one or more components certified under 21 CFR 1010.2.

(60) "Certifying entity" means an independent certifying organization meeting the requirements in 10 CFR 34, Appendix A or an agreement state meeting the requirements in 10 CFR 34, Appendix A, Parts II and III.

(61) "Changeable filters" means any filter, exclusive of inherent filtration, that may be removed from the useful beam through any electronic, mechanical or physical process.

(62) "Chelating agent" means a chemical compound used to remove radioactive material from other substances.

Note: Examples of chelating agents are amine polycarboxylic acids, hydroxycarboxylic acids, glucinic acid and polycarboxylic acids.

(63) "Chiropractor" means an individual licensed under ch. 446, Stats., to practice chiropractic.

(64) "Class" means a classification scheme for inhaled material according to the material's rate of clearance from the pulmonary region of the lung. Materials are classified as D, W or Y, depending on the amount of time half of the material clears from human lungs. Half of class D material clears from lungs in less than 10 days; half of class W material clears from lungs in from 10 to 100 days; and half of class Y material clears from lungs in greater than 100 days.

(65) "Cinefluorography" means the continuous recording of a fluoroscopy image using movie film.

(66) "Client's address" means the area of use or a temporary jobsite for the purpose of providing mobile medical service.

(67) "Closed transport vehicle" means a transport vehicle equipped with a securely attached exterior enclosure that during normal transportation restricts the access of unauthorized persons to the cargo space containing a radioactive material. The enclosure may be either temporary or permanent but shall limit

Unofficial Text (See Printed Volume). Current through date and Register shown on Title Page.

access from top, sides and ends. In the case of packaged materials, the vehicle may be of the "see−through" type that allows observation of the packages while prohibiting access.

(68) "Coefficient of variation" means the ratio of the standard deviation to the mean value of a population of observations. It is estimated using the following equation: where:

$$C = \frac{s}{\overline{X}} = \frac{1}{\overline{X}}\left[\sum_{i=1}^{n}\frac{(X_i - \overline{X})^2}{n-1}\right]^{1/2}$$

S = standard deviation of the observed values;
X = mean value of observations in sample;
X_i = ith observation in sample; and
n = number of observations in sample.

(69) "Collective dose" means the sum of the individual doses received in a given period of time by a specified population from exposure to a specified source of radiation.

(70) "Collimator" means one of the following:

(a) A radiation shield that is placed on the end of the guide tube or directly onto a radiographic exposure device to restrict the size of the radiation beam when the sealed source is moved into position to make a radiographic exposure.

(b) A device attached to an x−ray tube that limits the radiation area.

(71) "Commission" means the United States nuclear regulatory commission.

(72) "Committed dose equivalent" or "CDE" means the dose equivalent to organs or tissues of reference that will be received from an intake of radioactive material by an individual during the 50−year period following the intake.

(73) "Committed effective dose equivalent" or "CEDE" is the sum of the products of the weighting factors applicable to each of the body organs or tissues that are irradiated and the committed dose equivalent to each of these organs or tissues.

Note: Committed effective dose equivalent ($H_{E,50}$) equals the sum of the weighting factor ($w_{T,}$) times the committed dose equivalent ($H_{T,50}$).

(74) "Computed tomography" or "CT" means the production of a tomogram by the acquisition and computer processing of x−ray transmission data.

(75) (a) "Computed tomography dose index" or "CTDI" means the integral from −10T to +10T of the dose profile along a line perpendicular to the tomographic plane divided by the product of the nominal tomographic section thickness and the number of tomograms produced in a single scan, that is:

$$CTDI = \frac{1}{nT}\int_{-10T}^{+10T} D(z)\,dz$$

where: z = position along a line perpendicular to the tomographic plane;
D(z) = dose at position z;
T = nominal tomographic section thickness in millimeters;
n = number of tomograms produced in a single scan.

(b) The definition of "computed tomography dose index" assumes that the dose profile is centered around z=0 and that, for a multiple tomogram system, the scan increment between adjacent scans is nT.

(75m) "Consignment" means each shipment of a package or groups of packages or load of radioactive material offered by a shipper for transport.

(75r) "Consortium"means an association of medical use licensees and a positron emission tomography (PET) radionuclide production facility in the same geographical area that jointly own or share in the operation and maintenance cost of the PET radionuclide production facility that produces PET radionuclides for use in producing radioactive drugs within the consortiuum for noncommercial distributions among its associated members for medical use. The PET radionuclide production facility must be located at an educational institution, a Federal facility or a medical facility.

(76) "Constraint" means a value above which specified licensee or registrant actions are required.

(77) "Contact therapy system" means a therapeutic radiation machine with a short target to skin distance, usually less than 5 centimeters.

Unofficial Text (See Printed Volume). Current through date and Register shown on Title Page.

(78) "Control cable" means the cable that is connected to the source assembly and used to drive the source to and from the exposure location.
(79) "Control drive mechanism" means a device that enables the source assembly to be moved into and out of the exposure device.
(80) "Control panel" means that part of an x−ray control upon which are mounted the switches, knobs, pushbuttons and other hardware necessary for manually setting the technique factors.
(81) "Control tube" means a protective sheath for guiding the control cable. The control tube connects the control drive mechanism to the radiographic exposure device.
(82) "Controlled area" means an area, outside of a restricted area but inside the site boundary, access to which may be limited by the licensee or registrant for any reason.
(82m) "Conveyance" means any one of the following:
(a) For transport by public highway or rail, any transport vehicle or large freight container.
(b) For transport by water, any vessel, or any hold, compartment or defined deck area of a vessel, including any transport vehicle on board the vessel.
(c) For transport by aircraft, any aircraft.
(83) "Cooling curve" means the graphical relationship between heat units stored and cooling time.
(84) "Critical group" means the group of individuals reasonably expected to receive the greatest exposure to residual radioactivity for any applicable set of circumstances.
(84m) "Criticality safety index" or "CSI" means the dimensionless number, rounded up to the next tenth, assigned to and placed on the label of a fissile material package, to designate the degree of control of accumulation of packages containing fissile material during transportation.
Note: Determination of the criticality safety index is described in s. DHS 157.93 (7) and (8).
(85) "CT conditions of operation" means all selectable parameters governing the operation of a CT x−ray system including nominal tomographic section thickness, filtration and the technique factors as defined in s. DHS 157.84.
(86) "CT gantry" means the tube housing assemblies, beam− limiting devices, detectors and the supporting structures and frames that hold these components.
(87) "CT number" or "CTN" means the number used to represent the x−ray attenuation associated with each elemental area of the CT image as expressed in the following equation:

$$CTN = \frac{k(\mu_x - \mu_w)}{\mu_w}$$

where: K = a constant, a normal value of 1,000 when the Houndsfield scale of CTN is used; μ_x = linear attenuation coefficient of the material of interest; μ_w = linear attenuation coefficient of water.
(87m) "Cumulative air kerma" means the total air kerma accrued from the beginning of an examination or procedure and includes all contributions from fluoroscopic and radiographic irradiation.
(88) "Curie" or "Ci" means 3.7 x 1010 disintegrations per second = 3.7 x 1010 becquerels = 2.22 x 1012 disintegrations per minute.
(89) "Dead−man switch" means a switch so constructed that a circuit closing contact may be maintained only by continuous pressure on the switch by the operator.
(90) "Declared pregnant woman" means a woman who has voluntarily informed the licensee or registrant, in writing, of her pregnancy and the estimated date of conception. The declaration remains in effect until the declared pregnant woman withdraws the declaration in writing or is no longer pregnant.
(91) "Decommission" means to remove a facility or site safely from service and reduce residual radioactivity to a level that permits release of the property for unrestricted use and termination of the license; or release of the property under restricted conditions and termination of the license.
(92) "Dedicated check source" means a radioactive source that is used to assure the constant operation of a radiation detection or measurement device over several months or years.
(93) "Deep dose equivalent" or "Hd" means the dose equivalent at a tissue depth of one centimeter (1000 mg/cm2) and applies to external whole body exposure.
(94) "Deliberate misconduct" means an intentional act or omission that the person knows would cause any of the following:
(a) A licensee, registrant or applicant to be in violation of any requirement under this chapter, any order of the department, or any term, condition or limitation of any license or registration issued by the department under this chapter.

Unofficial Text (See Printed Volume). Current through date and Register shown on Title Page.

(b) A violation of a requirement, procedure, instruction, contract, purchase order or policy of a licensee, registrant, applicant, or contractor or subcontractor of a licensee, registrant or applicant.

(95) "Demand respirator" means an atmosphere−supplying respirator that admits breathing air to the face piece only when a negative pressure is created inside the facepiece by inhalation.

(96) "Dentist" means an individual licensed under ch. 447, Stats., to practice dentistry.

(97) "Department" means the department of health and family services.

(98) "Depleted uranium" means uranium containing less uranium− 235 than the naturally occurring distribution of uranium isotopes.

(99) "Derived air concentration" or "DAC" means the concentration of a given radionuclide in air which, if breathed by the reference man for a working year of 2,000 hours under conditions of light work, results in an intake of one ALI.

Note: For purposes of this chapter, the condition of light work is an inhalation rate of 1.2 cubic meters of air per hour for 2,000 hours in a year. DAC values are given in Table I, column 3, of Appendix E.

(100) "Derived air concentration−hour" or "DAC−hour" means the product of the concentration of radioactive material in air, expressed as a fraction or multiple of the derived air concentration for each radionuclide, and the time of exposure to that radionuclide, in hours. A licensee or registrant may take 2,000 DAC− hours to represent one ALI, equivalent to a committed effective dose equivalent of 0.05 Sv (5 rem).

(101) "Detector" means a device which in the presence of radiation provides, by either direct or indirect means, a signal or other indication suitable for use in measuring one or more quantities of incident radiation.

(101m) "Deuterium" means deuterium and any deuterium compounds, including heavy water, in which the ratio of deuterium atoms to hydrogen atoms exceeds 1:5000.

(102) "Diagnostic source assembly" means the tube housing assembly with a beam−limiting device attached.

(103) "Diagnostic x−ray imaging system" means an assemblage of components for the generation, emission and reception of x−rays and the transformation, storage and visual display of the resultant x−ray image.

(103m) "DICOM" means digital imaging and communications in medicine.

(103r) "Discrete source" means a radionuclide that has been processed so that its concentration within a material has been purposely increased for use for commercial, medical, or research activities.

(104) "Disposable respirator" means a respirator for which maintenance is not intended and that is designed to be discarded after excessive breathing resistance, sorbent exhaustion, physical damage, or end−of−service−life renders it unsuitable for use. Examples of this type of respirator are a disposable half−mask respirator or a disposable escape−only self−contained breathing apparatus.

Note: Sorbent exhaustion refers to the inability of an absorbent material to absorb any more of the material for which it was designed.

(105) "Disposal" means the isolation of radioactive wastes from the environment inhabited by man and containing his food− chains by emplacement in a land disposal facility.

(106) "Disposal site" means that portion of a land disposal facility which is used for the disposal of waste. It consists of disposal units and a buffer zone.

(107) "Disposal unit" means a discrete portion of a disposal site into which waste is placed for disposal.

(108) "Distinguishable from background" means that the detectable concentration of a radionuclide is statistically different from the background concentration of that radionuclide in the vicinity of that site or, in the case of structures, in similar materials using adequate measurement technology, survey and statistical techniques.

(109) "Dose equivalent" or "HT" means the product of the absorbed dose in tissue, quality factor and all other necessary modifying factors at the location of interest. The units of dose equivalent are the sievert and rem.

(110) "Dose limits" means the permissible upper bounds of radiation doses established under this chapter.

(111) "Dose monitor unit" means a unit response from the beam monitoring system from which the absorbed dose may be calculated.

(112) "Dose profile" means the dose as a function of position along a line.

(113) "Dosimeter" means a recording device used to measure exposure to ionizing radiation.

(114) "Dosimetry processor" means an individual or an organization that processes and evaluates individual monitoring devices to determine the radiation dose delivered to the monitoring devices.

Unofficial Text (See Printed Volume). Current through date and Register shown on Title Page.

(115) "Doubly encapsulated sealed source" means a sealed source in which the radioactive material is sealed within an inner capsule and that capsule is sealed within an outer capsule.
(116) "Effective dose equivalent" or "EDE" means the sum of the products of the dose equivalent to each organ or tissue and the weighting factor applicable to each of the body organs or tissues that are irradiated ($H_E = \Sigma\ w_T H_T$).
Note: Effective dose equivalent (H_E) equals the sum of the weighting factor (w_T) times the dose equivalent to each organ or tissue (H_T).
(117) "Electron microscope" means a microscope utilizing electrons to provide high magnification examination of materials.
(118) "Elemental area" means the smallest area within a tomogram for which the x−ray attenuation properties of a body are depicted.
(119) "Embryo or fetus" means the developing human organism from conception until the time of birth.
(120) "Emergency" means an event requiring prompt action to mitigate a threat to the health and safety of workers and the public or a threat of damage to the environment.
(121) "Energy compensation source" or "ECS" means a small sealed source, with an activity not exceeding 3.7 MBq (100 microcuries), used within a well logging tool, or other tool components, to provide a reference standard to maintain the well logging tool's calibration when in use.
(122) "Enriched uranium" means uranium containing more uranium−235 than the naturally occurring distribution of uranium isotopes.
(123) "Entrance air kerma rate" means the air kerma free in air per unit time at the point where the center of the useful beam enters the patient.
(124) "Entrance or access point" means any location through which an individual could gain access to radiation areas or to licensed or registered radioactive materials. This includes entry or exit portals of sufficient size to permit human entry, irrespective of their intended use.
(124m) "Exclusive use" means the sole use by a single consignor of a conveyance for which all initial, intermediate, and final loading and unloading are carried out in accordance with the direction of the consignor or consignee. The consignor and the carrier must ensure that any loading or unloading is performed by personnel having radiological training and resources appropriate for the safe handling of the consignment. The consignor shall issue specific instructions, in writing, for maintenance of exclusive use shipment controls, and include them with the shipping
paper information provided to the carrier by the consignor.
(125) "Explosive material" means any chemical compound, mixture or device that produces a substantial instantaneous release of gas and heat spontaneously or by contact with sparks or flame.
(126) "Exposure" means the quotient of dQ divided by dm where "dQ" is the absolute value of the total charge of the ions of one sign produced in air when all the electrons liberated by photons in a volume element of air having mass "dm" are completely stopped in air. The SI unit of exposure is the coulomb per kilogram. The standard unit of exposure is the roentgen.
(127) "Exposure head" means a device that locates the gamma radiography sealed source in the selected working position.
(128) "Exposure rate" means the exposure per unit of time, such as roentgen per minute and milliroentgen per hour.
(129) "External beam radiation therapy" means therapeutic irradiation in which the source of radiation is at a distance from the body.
(130) "External dose" means that portion of the dose equivalent received from any source of radiation outside the body.
(131) "External sinking fund" means an account, segregated from licensee assets and outside the licensee's administrative control, into which monies are periodically deposited that are sufficient to pay decommissioning costs expected at the time licensee operations are terminated.
(132) "Extremity" means hand, elbow, arm below the elbow, foot, knee and leg below the knee.
(133) "Extremity bone densitometer" means a device that tests the mineral content of the bone of the fore arm, hand or foot.
(134) "FDA" means the U.S. food and drug administration.
(135) "Field emission equipment" means equipment that uses an x−ray tube in which electron emission from the cathode is due solely to the action of an electric field.
(136) "Field station" means a facility where radioactive sources may be stored or used and from which equipment is dispatched to temporary job sites.

Unofficial Text (See Printed Volume). Current through date and Register shown on Title Page.

(137) "Film badge" means a dosimeter containing radiation sensitive photographic film for measuring radiation dose plus various filters that characterize the type of radiation encountered. When developed, the darkness of the film is directly proportional to the amount of radiation received.
(138) "Filter" means material placed in the useful beam to preferentially absorb selected radiation energies.
(139) "Filtering facepiece" means a negative pressure respirator with a filter as an integral part of the facepiece or with the entire facepiece composed of the filtering medium, not equipped with elastomeric sealing surfaces and adjustable straps. **Note:** Elastomeric refers to material that is elastic and form fitting to provide a tight seal against the face.
(140) "Fissile material" means the radionuclides uranium−233, uranium−235, plutonium−239 and plutonium−241, or any combination of these radionuclides. Fissile material means the fissile nuclides themselves, not material containing fissile nuclides. Unirradiated natural uranium and depleted uranium, and natural uranium or depleted uranium that has been irradiated in thermal reactors only are not included in this definition.
Note: Certain exclusions from fissile material controls are provided in 10 CFR 71.15.
(141) "Fissile material package" or Type AF package, Type BF package, Type B(U)F package, or Type B(M)F package means a fissile material packaging together with its fissile material contents.
(142) "Fit factor" means a quantitative estimate of the fit of a particular respirator to a specific individual, and estimates the ratio of the concentration of a substance in ambient air to its concentration inside the respirator when worn.
(143) "Fit test" means the use of a protocol to qualitatively ir quantitatively evaluate the fit of a respirator on an individual.
(143m) "Fluoroscopic air kerma display device" means a device, or subsystem, or component that provided the display of the air kerma rate and cumulative air kerma required by 21 CFR 1020.32 (k). It includes radiation detectors, if any, electronic and computer components, associated software, and display units.
(144) "Fluoroscopic imaging assembly" means a subsystem in which x−ray photons produce a visible image. It includes the image receptor such as the image intensifier and spot−film device, electrical interlocks, if any, and structural material providing linkage between the image receptor and diagnostic source assembly.
(145) "Fresh water aquifer" means, for the purposes of this chapter, a geologic formation that is capable of yielding fresh water to a well or spring.
(146) "Gantry" means that part of a radiation therapy system supporting and allowing movements of the radiation head about a center of rotation.
(147) "General purpose radiographic x−ray system" means any radiographic x−ray system, which, by design, is not limited to radiographic examination of specific anatomical regions.
(148) "Gamma stereotactic radiosurgery" means the use of a device containing a radioactive material providing multiple point radiation therapy treatment to a specific tumor site.
(149) "Generally applicable environmental radiation standards" means standards issued by the U.S. environmental protection agency under the authority of 42 USC 23, that impose limits on radiation exposures or levels, or concentrations or quantities of radioactive material, in the general environment outside the boundaries of locations under the control of persons possessing or using radioactive material.
(150) "Gonad shield" means a protective barrier for the testes or ovaries.
(150m) "Graphite" means, for the purposes of 10 CFR 71.15 and 10 CFR 71.22, graphite with a boron equivalent content less than 5 parts per million and density greater than 1.5 grams per cubic centimeter.
(151) "Gray" or "Gy" means the SI unit of absorbed dose, air kerma and specific energy imparted equal to one joule per kilogram. **Note:** The special unit of absorbed dose is being replaced by the gray. 1 Gy equals 100 rad.
(152) "Guide tube" means a flexible or rigid tube, for guiding the source assembly and the attached control cable from the exposure device to the exposure head. The guide tube may also include the connections necessary for attachment to the exposure device and to the exposure head.
(153) "Half−value layer" or "HVL" means the thickness of specified material which attenuates an x−ray or gamma radiation beam such that the air kerma rate at a point within the radiation beam is reduced to one−half of the air kerma rate at the same point without the material present. In this definition, the contribution of all scattered radiation, other than any that might be present initially in the radiation beam concerned, is excluded.
(154) "Hands−on experience" means experience in all of those areas considered to be directly involved in the radiography process.

Unofficial Text (See Printed Volume). Current through date and Register shown on Title Page.

Note: "Hands−on experience" includes taking radiographs, calibration of survey instruments, operational and performance testing of survey instruments and devices, film development, posting of warning signs in radiation areas, transportation of radiography equipment, posting on a bulletin board of records and radiation area surveillance, as applicable.

(155) "Healing arts" means a profession concerned with diagnosis and treatment of human maladies, including the practice of medicine, dentistry, osteopathy chiropractic and podiatry.

(156) "Healing arts screening" means the exposure of a human being to x−rays without prior examination disclosing a
need for an x−ray procedure and prescription for such a study by a practitioner of the healing arts.

(157) "Heat unit" means a unit of energy equal to 0.75 joule. It is approximately equal to the energy given by the product of the peak kilovoltage, milliampere and seconds, which is kVp x mA x time in seconds.

(158) "Helmet" means a rigid respiratory inlet covering that also provides head protection against impact and penetration.

(159) "High dose−rate remote afterloader" or "HDR" means a device that delivers a dose rate in excess of 12 gray (1200 rads) per hour.

(160) "High radiation area" means an area, accessible to individuals, in which radiation levels from radiation sources external to the body could result in an individual receiving a dose equivalent in excess of one mSv (0.1 rem) in one hour at 30 centimeters from any source of radiation or 30 centimeters from any surface that the radiation penetrates.

(161) "Hood" means a respiratory inlet covering that completely covers the head and neck and may also cover portions of the shoulders and torso.

(162) "Human use" means the internal or external administration of radiation or radioactive material to human beings.

(163) "Image intensifier" means a device, installed in its housing, which instantaneously converts an x−ray pattern into a corresponding light image of higher intensity.

(164) "Image receptor support" means, for mammographic systems, that part of the system designed to support the image receptor during mammography.

(165) "Image receptor" means any device, such as a fluorescent screen or radiographic film, which transforms incident x−ray photons either into a visible image or into another form that may be made into a visible image by further transformations.

(166) "Independent certifying organization" means an independent organization that meets all of the criteria specified in 10 CFR 34, Appendix A.

(167) "Individual" means any human being.

(168) "Individual monitoring" means the assessment of any of the following:

(a) Dose equivalent by the use of individual monitoring devices or by the use of survey data.

(b) Committed effective dose equivalent by bioassay or by determination of the time−weighted air concentrations to which an individual has been exposed.

(169) "Individual monitoring devices," mean devices designed to be worn by a single individual for the assessment of dose equivalent. Examples of individual monitoring devices are film badges, thermoluminescent dosimeters, optically stimulated luminescent dosimeters, pocket dosimeters, direct reading dosimeters and personal air sampling devices.

(170) "Industrial radiography" means an examination of the structure of materials by the nondestructive method of utilizing ionizing radiation to make radiographic images.

(171) "Inherent filtration" means the filtration of the useful beam provided by the permanently installed components of the tube housing assembly.

(172) "Injection tool" means a device used for controlled subsurface injection of radioactive tracer material.

(173) "Inspection" means an official examination or observation by the department including tests, surveys and monitoring to determine compliance with rules, regulations, orders, requirements and conditions of the department.

(174) "Interlock" means a device preventing the start or continued operation of equipment unless certain predetermined conditions prevail.

(175) "Internal dose" means that portion of the dose equivalent received from radioactive material taken into the body.

(176) "Ionizing radiation" means alpha particles, beta particles, gamma rays, x rays, neutrons, high−speed electrons, high− speed protons and other particles capable of producing ions. "Ionizing radiation" does not include radiowaves or microwaves, visible, infrared or ultraviolet light.

Unofficial Text (See Printed Volume). Current through date and Register shown on Title Page.

(177) "Irradiation" means the exposure of a living being or matter to ionizing radiation.
(178) "Irradiator" means a facility that uses radioactive sealed sources for the irradiation of objects or materials and in which radiation dose rates exceeding 5 grays (500 rads) per hour exist at one meter from the sealed radioactive sources in air or water, as applicable for the irradiator type, but does not include irradiators in which both the sealed source and the area subject to irradiation are contained within a device and are not accessible to personnel.
(179) "Irradiator operator" means an individual who has successfully completed the training and testing described in s. DHS 157.73 (12) and is authorized by the terms of the license to operate the irradiator without a supervisor present.
(180) "Irradiator operator supervisor" means an individual who meets the requirements for an irradiator operator and who physically oversees operation of the irradiator by an individual who is currently receiving training and testing described in s. DHS 157.73 (12).
(181) "Isocenter" means the center of the sphere through which the useful beam axis passes while the gantry moves through its full range of motions.
(182) "Kilovolt" or "kV" means the energy equal to that acquired by a photon with one electron charge in passing through a potential difference of 1,000 volts in a vacuum.
Note: Current convention uses kV to designate photons and keV to designate electrons.
(183) "Kilovolts peak" or "kVp" means the maximum value of the potential difference across an x−ray tube during an exposure.
(184) "kWs" means kilowatt second.
(185) "Land disposal facility" means the land, buildings and structures, and equipment used for the disposal of radioactive wastes.
(185m) "Last−image hold" or "LIH" means an image obtained either by retaining one or more fluoroscopic images, which may be temporally integrated, at the end of a fluoroscopic exposure or by initiating a separate and distinct radiographic exposure automatically and immediately in conjunction with termination of the fluoroscopic exposure.
(185r) "Lateral fluoroscope" means the x−ray tube and image receptor combination in a biplane system dedicated to the lateral projection. It consists of the lateral x−ray tube housing assembly and the lateral image receptor that are fixed in position relative to the table with the x−ray beam axis parallel to the plane of the table.
(186) "Lay−barge radiography" means industrial radiography performed on any water vessel used for laying pipe.
(187) "Lead equivalent" means the thickness of the material in question affording the same attenuation as lead.
(188) "Leakage radiation" means radiation emanating from the diagnostic source assembly except for any of the following:
(a) The useful beam.
(b) Radiation produced when the exposure switch or timer is not activated.
(189) "Lens dose equivalent" or "LDE" means the external dose equivalent to the lens of the eye at a tissue depth of 0.3 centimeter (300 mg/cm2).
(190) "Licensed or registered material" means radioactive material received, possessed, used, transferred or disposed of under a general or specific license or registration issued by the department.
(191) "Licensed practitioner" means a chiropractor, dentist, physician, podiatrist, physician's assistant, nurse practitioner or radiologist's assistant licensed in the state of Wisconsin.
(192) "Licensing state" means any state approved by the Conference of Radiation Control Program Directors, Inc., as having regulations equivalent to the Suggested State Regulations for Control of Radiation relating to NARM and an effective program for the regulatory control of NARM.
(193) "Light field" means the area of the intersection of the light beam from the beam−limiting device and one of the set of planes parallel to and including the plane of the image receptor, whose perimeter is the locus of points at which the illumination is one−fourth of the maximum in the intersection.
(194) "Logging tool" means a device used subsurface to perform well logging.
(195) "Loose−fitting facepiece" means a respiratory inlet covering that is designed to form a partial seal with the face.
(196) "Lost or missing licensed or registered source of radiation" means a licensed or registered source of radiation whose location is unknown. This definition includes licensed or registered material that has been

Unofficial Text (See Printed Volume). Current through date and Register shown on Title Page.

shipped but has not reached its planned destination and whose location cannot be readily traced in the transportation system.

(197) "Low dose−rate remote afterloader" or "LDR" means a device that delivers a dose rate of less than or equal to 2 gray (200 rads) per hour.

(197m) "Low specific activity" means radioactive material with limited specific activity which is nonfissile or is excepted under s. DHS 157.92 (2) (c), and which satisfies the descriptions and limits set forth in ss. DHS 157.03 (198), (199) or (200). Shielding materials surrounding the low specific activity material may not be considered in determining the estimated average specific activity of the package contents.

(198) "Low specific activity − I" or "LSA−I material" means any of the following:

(a) Uranium and thorium ores, concentrates of uranium and thorium ores, and other ores containing naturally occurring radioactive radionuclides which are not intended to be processed for the use of radionuclides.

(b) Solid unirradiated natural uranium or depleted uranium or natural thorium or their solid or liquid compounds or mixtures.

(c) Radioactive material for which the A2 value is unlimited.

(d) Other radioactive material in which the radioactive material is distributed throughout and the estimated average specific activity does not exceed 30 times the value for exempt material activity concentration determined under Appendix A.

(199) "Low specific activity – II" or "LSA−II material" means either of the following:

(a) Water with tritium concentration up to 0.8 terabecquerel per liter (20.0 Ci/L).

(b) Other material in which the radioactive material is distributed throughout, and the average specific activity does not exceed 10−4 A2/g for solids and gases and 10−5 A2/g for liquids.

(200) "Low specific activity − III" or "LSA−III material" means solids, such as consolidated wastes or activated materials, excluding powders, that satisfy the requirements of 10 CFR 71.77, for which all of the following apply:

(a) The radioactive material is distributed throughout a solid or a collection of solid objects, or is essentially uniformly distributed in a solid compact binding agent, for example, concrete, bitumen or ceramic.

(b) The radioactive material is relatively insoluble, or it is intrinsically contained in a relatively insoluble material, so that, even under loss of packaging, the loss of radioactive material per package by leaching, when placed in water for 7 days, would not exceed 0.1 A2.

(c) The estimated average specific activity of the solid does not exceed 2 x 10−3 A2/g.

(201) "Low toxicity alpha emitters" means natural uranium, depleted uranium, natural thorium; uranium−235, uranium−238, thorium−232, thorium−228 or thorium−230 when contained in ores or physical or chemical concentrates or tailings; or alpha emitters with a half−life of less than 10 days.

(202) "mA" means milliampere.

(203) "Mammography" means radiography of the breast, but does not include radiography of the breast performed during invasive interventions for localization or biopsy procedures.

(204) "Management" means the chief executive officer or other individual having the authority to manage, direct or administer the licensee's activities, or those persons' delegate or delegates.

(205) "Manual brachytherapy" means a type of brachytherapy in which the radioactive sources are manually inserted either into the body cavities that are in close proximity to a tumor or directly into the tumor volume.

Note: Examples of radioactive sources are seeds and ribbons.

(206) "mAs" means milliampere second.

(207) "Maximum line current" means the root−mean−square current in the supply line of an x−ray machine operating at its maximum rating.

(208) "Medical event" means an improper administration of radiation or radioactive material to a patient or human research subject that requires reporting to the department.

(209) "Medical institution" means an organization in which medical disciplines are practiced.

(210) "Medical physicist" means an individual with any of the following qualifications:

(a) Certified by the American board of radiology or the American board of health physics in one or more of the following:

1. Therapeutic radiological physics.
2. Roentgen−ray and gamma−ray physics.

Unofficial Text (See Printed Volume). Current through date and Register shown on Title Page.

3. X−ray and radium physics.
4. Radiological physics.
5. Comprehensive health physics.

(b) Certified by the American board of medical physics in radiation oncology physics.
(c) Certified by the Canadian college of medical physics.

(211) "Medical use" means the intentional internal or external administration of radioactive material or the radiation from radioactive material to patients or human research subjects under the supervision of an authorized user.

(212) "Medium dose−rate remote afterloader" or "MDR" means a device that delivers a dose rate of greater than 2 gray (200 rads) but less than 12 gray (1200 rads) per hour at the point or surface where the dose is prescribed.

(213) "Megavolt" or "MV" means the energy equal to that acquired by a particle with one electron charge in passing through a potential difference of one million volts in a vacuum.

Note: The current convention is to use MV to designate photons and MeV to designate electrons.

(214) "Member of the public" means an individual in a controlled or unrestricted area. However, an individual is not a member of the public during any period in which the individual receives an occupational dose.

(215) "Minor" means an individual less than 18 years of age.

(216) "Mobile medical service supplier" means a mobile service that carries or receives radioactive materials for medical use at a client's address.

(217) "Mobile x−ray equipment" means x−ray equipment mounted on a permanent base with wheels or casters for moving while completely assembled.

(218) "Moderator" means a material that decreases the energy of neutrons.

(219) "Monitoring" means the measurement of radiation, radioactive material concentrations, surface area activities or quantities of radioactive material and the use of the results of these measurements to evaluate potential exposures and doses.

(220) "Moving beam radiation therapy" means radiation therapy with any planned displacement of radiation field or patient relative to each other or with any planned change of absorbed dose distribution. It includes arc, skip, conformal, intensity modulation and rotational therapy.

(221) "Multiple tomogram system" means a computed tomography x−ray system that obtains x−ray transmission data simultaneously during a single scan to produce more than one tomogram image.

(221m) "Nationally tracked source" means a sealed source containing a quantity equal to or greater than Category 1 or Category 2 levels of any radioactive material listed in Appendix T. In this context a sealed source is defined as radioactive material that is sealed in a capsule or closely bonded, in a solid form and which is not exempt from regulatory control. It does not mean material encapsulated solely for disposal, or nuclear material contained in any fuel assembly, subassembly, fuel rod, or fuel pellet. Category 1 nationally tracked sources are those containing radioactive material at a quantity equal to or greater than the Category 1 threshhold. Category 2 nationally tracked sources are those containing radioactive material at a quantity equal to or greater than the Category 2 threshhold but less than the Category 1 threshhold.

(222) "NARM" means any naturally occurring or accelerator−produced radioactive material. ~~It does not include byproduct, source or special nuclear material.~~

(223) "Natural radioactivity" means radioactivity of naturally occurring nuclides.

(224) "Natural thorium" means thorium with the naturally occurring distribution of thorium isotopes, which is essentially 100 weight percent thorium−232.

(225) "Natural uranium" means uranium with the naturally occurring distribution of uranium isotopes, which is approximately 0.711 weight percent uranium−235, and the remainder by weight essentially uranium−238.

(226) "Negative pressure respirator − tight fitting" means a respirator in which the air pressure inside the facepiece is negative during inhalation with respect to the ambient air pressure outside the respirator.

(227) "Neutron absorber" means a material that absorbs neutrons emitted from radioactive material.

(228) "Noble gas" means a chemically inert gas that does not combine with other elements.

(229) "Nominal tomographic section thickness" means the full width at half−maximum of the sensitivity profile taken at the center of the cross−sectional volume over which x−ray transmission data are collected.

(230) "Nominal treatment distance" means:

Unofficial Text (See Printed Volume). Current through date and Register shown on Title Page.

(a) For electron irradiation, the distance from the scattering foil, virtual source or exit window of the electron beam to the entrance surface of the irradiated object along the central axis of the useful beam.
(b) For x−ray irradiation, the virtual source or target to isocenter distance along the central axis of the useful beam. For non− isocentric equipment, this distance shall be that specified by the manufacturer.
(231) "Nonstochastic effect" or "deterministic effect" means health effects, the severity of which varies with the dose and for which a threshold is believed to exist. Radiation−induced cataract formation is an example of a nonstochastic effect.
(232) "Normal form radioactive material" means radioactive material that has not been demonstrated to qualify as special form radioactive material.
(233) "Notice of violation" means a written notice provided in response to an alleged infraction of ss. 254.31 to 254.45, Stats., this chapter, the conditions of a license or an order issued by the department.
(234) "NRC" means the U.S. nuclear regulatory commission.
(235) "Nuclear waste" means a quantity of source, byproduct or special nuclear material required to be in NRC−approved specification packaging while transported to, through or across a state boundary to a disposal site, or to a collection point for transport to a disposal site.
(236) "Optically stimulated luminescent dosimeter" or "OSL" means a dosimeter containing a crystalline solid for measuring radiation dose plus filters to help characterize the type of radiation encountered.
Note: When exposed to the appropriate energy of light, exposed optically stimulated luminescent crystals give off light proportional to the energy received from the radiation.
(237) "Occupational dose" means the dose received by an individual in the course of employment in which the individual's assigned duties involve exposure to radiation, or to radioactive material from licensed and unlicensed sources of radiation, whether in the possession of the licensee, registrant or other person. Occupational dose does not include dose received from background radiation, from any medical administration the individual has received, from exposure to individuals administered radioactive material and released under s. DHS 157.62 (8), from voluntary participation in medical research programs or as a member of the public.
(238) "Offshore platform radiography" means industrial radiography conducted from a platform over a body of water.
(239) "Offsite response organization" means the non−licensee offsite organizations that may be needed to respond to an emergency, including local fire, police, ambulance and hospital services.
(240) "Output" means the exposure rate, dose rate or a quantity related in a known manner to these rates from a brachytherapy source or a teletherapy, remote afterloader or gamma stereotactic radiosurgery unit for a specified set of exposure conditions.
(241) "Package" means the packaging together with its radioactive contents as presented for transport.
(242) "Packaging" means the assembly of components necessary to ensure compliance with the packaging requirements of 49 CFR Part 173, Subpart I. It may consist of one or more receptacles, absorbent materials, spacing structures, thermal insulation, radiation shielding and devices for cooling or absorbing mechanical shocks. The vehicle, tie−down system and auxiliary equipment may be designated as part of the packaging.
(243) "Panoramic dry−source−storage irradiator" means a device in which the irradiations occur in air in areas potentially accessible to personnel and in which the sources are stored in shields made of solid materials. The term includes beam−type dry−source−storage devices in which only a narrow beam of radiation is produced.
(244) "Panoramic irradiator" means a device in which the irradiations are performed in air in areas potentially accessible to personnel. The term includes beam−type devices.
(245) "Panoramic wet−source−storage irradiator" means a device in which the irradiations occur in air in areas potentially accessible to personnel and in which the sources are stored under water in a storage pool.
(246) "Pass box" means a box with openings on each side that is placed in a wall between an x−ray room and a darkroom allowing transfer of film holders between the 2 rooms.
(247) "Patient" means an individual or animal subjected to healing arts examination, diagnosis or treatment.
(247m) "PACS" means picture archiving and communication system.
(248) "Periodic quality control check" means a procedure that is performed to ensure that a previous calibration continues to be valid.
(249) "Permanent radiographic installation" means an enclosed shielded room, cell or vault, not located at a temporary jobsite, in which radiography is performed.

Unofficial Text (See Printed Volume). Current through date and Register shown on Title Page.

(250) "Person" means any individual, corporation, partnership, firm, association, trust, estate, public or private institution, group, agency, political subdivision of this state, any other state or political subdivision or agency thereof and any legal successor, representative, agent or agency of the foregoing, but does not include federal government agencies or Indian tribes or bands.
(251) "Person in control" means the individual directly responsible for safe operation of the radiation installation.
(251m) "Personnel dosimeter" means a dosimeter, assigned to an individual, that is processed and evaluated by an accredited national voluntary laboratory accreditation program (NVLAP) processor.
(252) "Personal supervision" means guidance and instruction by the supervisor who is physically present at the jobsite and watching the performance of the operation in such proximity that contact may be maintained and immediate assistance given as required.
(253) "Phantom" means a volume of material behaving in a manner similar to tissue with respect to the attenuation and scattering of radiation.
Note: This requires that both the atomic number (Z) and the density of the material be similar to that of tissue.
(254) "Pharmacist" means an individual licensed under ch. 450, Stats., to practice pharmacy.
(255) "Physician" means a medical doctor or doctor of osteopathy licensed under ch. 448, Stats., to prescribe drugs in the practice of medicine.
(256) "Picture element" means an elemental area of a tomogram.
(257) "Planned special exposure" means an infrequent exposure to radiation, separate from and in addition to the annual occupational dose limits, that requires a licensee or registrant to calculate the dose to be received by individuals prior to initiation of the planned task, as required under s. DHS 157.22 (6).
(258) "Pocket dosimeter" means a type of individual monitoring device that allows the user to view the accumulated radiation exposure received as recorded by the device.
(259) "Podiatrist" means an individual licensed under ch. 448, Stats., to practice podiatry.
(260) "Pool irradiator" means any irradiator where the sources are stored or used in a pool of water including panoramic wet−source−storage irradiators and underwater irradiators.
(261) "Portable x−ray equipment" means x−ray equipment designed to be hand−carried.
(262) "Position indicating device" or "PID" means a device on dental x−ray equipment used to indicate the beam position and to establish a definite source−surface distance from the skin.
Note: A position indicating device may or may not incorporate or serve as a beam− limiting device.
(263) "Positive beam limitation" or "PBL" means the automatic or semi−automatic adjustment of an x−ray beam to the size of the selected image receptor, whereby exposures cannot be made without such adjustment.
(264) "Positive pressure respirator" means a respirator in which the pressure inside the respiratory inlet covering exceeds the ambient air pressure outside the respirator.
(264m) "Positron emission tomography/computed tomography" or "PET/CT" means a dual modality imaging assembly comprised of two distinct components, one using radioactive material for imaging and the other using an x−ray source.
(265) "Powered air−purifying respirator" or "PAPR" means an air−purifying respirator that uses a blower to force the ambient air through air−purifying elements to the inlet covering.
(266) "Practical examination" means a demonstration through application of the safety rules and principles in industrial radiography including use of all procedures and equipment to be used by radiographic personnel.
(267) "Preceptor" means an individual who provides, directs or verifies training and experience required for an individual to become an authorized user, an authorized medical physicist, an authorized nuclear pharmacist, or a Radiation Safety Officer for medical use.
(268) "Prescribed dosage" means the specified activity or a range of activities of a drug containing radioactive material as documented by any of the following means:
(a) In a written directive or prescription.
(b) Under directions of the authorized user for procedures not requiring a written directive.
(269) "Prescribed dose" means any of the following:
(a) For gamma stereotactic radiosurgery, the total dose as documented in the written directive.
(b) For teletherapy, the total dose and dose per fraction as documented in the written directive.
(c) For brachytherapy, either the total source strength and exposure time or the total dose, as documented in the written directive.
(d) For remote afterloaders, the total dose and dose per fraction as documented in the written directive.

Unofficial Text (See Printed Volume). Current through date and Register shown on Title Page.

(270) "Pressure demand respirator" means a positive pressure atmosphere−supplying respirator that admits breathing air to the facepiece when the positive pressure is reduced inside the facepiece by inhalation.
(271) "Primary dose monitoring system" means a system which will monitor the useful beam during irradiation and which will terminate irradiation when a pre−selected number of dose monitor units have been delivered.
(272) "Primary protective barrier" means the material, excluding filters, placed in the useful beam.
(273) "Principal activities" means activities authorized by the license that are essential to achieving the purpose for which the license was issued or amended. "Principal activities" do not include storage during which no licensed material is accessed for use or disposal and activities incidental to decontamination or decommissioning.
(274) "Product conveyor system" means a system for moving the product to be irradiated to, from and within the area where irradiation takes place.
(275) "Protective apron" means an apron made of radiation absorbing materials used to reduce radiation exposure to the wearer.
(276) "Protective barrier" means a primary or secondary protective barrier of radiation absorbing material or materials used to reduce radiation exposure.
(277) "Protective glove" means a glove made of radiation absorbing materials used to reduce radiation exposure and that surrounds the hand and fingers.
(278) "Public dose" means the dose received by a member of the public from exposure to sources of radiation released by a licensee or registrant or to any other source of radiation under the control of a licensee or registrant. It does not include occupational dose, dose received from background radiation, from any medical administration the individual has received, from exposure to individuals administered radioactive material and released under s. DHS 157.62 (8) or from voluntary participation in medical research programs.
(279) "Pulsed dose−rate remote afterloader" or "PDR" means a device that uses a single source capable of delivering dose rates in the high dose−rate range, but has both of the following characteristics:
(a) Is approximately one−tenth of the activity of typical high dose−rate remote afterloader sources.
(b) Is used to simulate the radiobiology of a low dose rate treatment by inserting the source for a given fraction of each hour.
(279m) "Pulsed mode" means operation of the x−ray system such that the x−ray tube current is pulsed by the x−ray control to produce one or more exposure intervals of duration less than one− half second.
(280) "Pyrophoric liquid" means any liquid that ignites spontaneously in dry or moist air at or below 54.4° C (130° F). This includes spontaneously combustible and water−reactive materials.
(281) "Pyrophoric solid" means any solid material, other than an explosive material, which under normal conditions is liable to cause fires through friction, retained heat from manufacturing or processing, or which may be ignited readily and, when ignited, burns so vigorously and persistently as to create a serious transportation, handling or disposal hazard.
(282) "Qualitative fit test" or "QLFT" means a pass or fail fit test to assess the adequacy of respirator fit that relies on the individual's response to the test agent.
(283) "Quality control" means an ongoing program to ensure continued reliable performance of the equipment designed to detect changes which may result in a clinically significant degradation in image quality or a significant increase in radiation exposure.
(284) "Quality factor" or "Q" means the modifying factor listed in tables 157.06A and 157.06B of s. DHS 157.06 (4) that is used to derive dose equivalent from absorbed dose.
(285) "Quantitative fit test" or "QNFT" means an assessment of the adequacy of respirator fit by numerically measuring the amount of leakage into the respirator.
(286) "Rad" means the special unit of absorbed dose. One rad is equal to an absorbed dose of 100 erg per gram or 0.01 joule per kilogram (0.01 gray).
(287) "Radiation" means alpha particles, beta particles, gamma rays, x rays, neutrons, high−speed electrons, high−speed protons and other particles capable of producing ions. "Radiation" does not include non−ionizing radiation, such as radiowaves or microwaves, visible, infrared or ultraviolet light.
(288) "Radiation area" means any area, accessible to individuals, in which radiation levels could result in an individual receiving a dose equivalent in excess of 0.05 mSv (0.005 rem) in one hour at 30 centimeters from the source of radiation or from any surface that the radiation penetrates.
(289) "Radiation head" means the structure from which the useful beam emerges.

Unofficial Text (See Printed Volume). Current through date and Register shown on Title Page.

(290) "Radiation incident" means the loss of control of a radioactive source or materials or the unintended exposure of an individual to radiation that exceeds the limits in this chapter.
(291) "Radiation installation" means any location or facility where radiation machines are used or where radioactive material is produced, transported, stored, disposed of or used for any purpose.
(292) "Radiation machine" means any device capable of producing radiation, except those devices with radioactive material as the only source of radiation.
(293) "Radiation room" means a shielded room in which irradiations take place. Underwater irradiators do not have radiation rooms.
(294) "Radiation safety officer" or "RSO" means an individual who has the knowledge and training to apply appropriate radiation regulations and has been assigned the responsibility for the overall radiation safety program by the registrant or licensee and is identified on a registration or a specific license.
(295) "Radiation safety officer for industrial radiography" means an individual with the responsibility for the overall radiation safety program for a licensee or registrant and who meets the requirements of s. DHS 157.44 (2).
(295m) "Radiation safety officer for medical use" means an individual that meets the requirements of ss. DHS 157.61 (7) (a) or (c) 1. and 157.61 (11), or who is identified as a radiation safety officer on a department, NRC or another agreement state medical use license or other equivalent license or permit recognized by the department for similar types and uses of radioactive material.
(296) "Radiation therapy simulation system" means a radiographic, CT or fluoroscopic x−ray system intended for localizing the volume to be exposed during radiation therapy and confirming the position and size of the therapeutic irradiation field.
(297) "Radioactive drug" means any chemical compound containing radioactive material that may be used on or administered to patients or human research subjects as an aid in the diagnosis, treatment or prevention of disease or other abnormal condition.
(298) "Radioactive marker" means radioactive material placed in the well−bore or on a structure intended for subsurface use for the purpose of depth determination or direction orientation.
(299) "Radioactive material" means any solid, liquid or gas that emits radiation spontaneously.
(300) "Radioactivity" means the transformation of unstable atomic nuclei by the emission of radiation.
(301) "Radiograph" means an image which is created directly or indirectly by radiation and results in a permanent record, either film or electronically stored image.
(302) "Radiographer" means any individual who performs or who, in attendance at the site where the sources of radiation are being used, personally supervises industrial radiographic operations and who is responsible to the licensee or registrant for assuring compliance with the requirements of this chapter and the conditions of the license or registration.
(303) "Radiographer certification" means written approval received from a certifying entity stating that an individual has satisfactorily met the equivalent radiation safety, testing and experience criteria in s. DHS 157.44 (3) (a).
(304) "Radiographer's assistant" means any individual who under the direct supervision of a radiographer, uses radiographic exposure devices, sources of radiation, related handling tools or radiation survey instruments in industrial radiography.
(305) "Radiographic exposure device" means any instrument containing a sealed source fastened or contained within the instrument, in which the sealed source or shielding thereof may be moved or otherwise changed, from a shielded to unshielded position for purposes of making a radiographic exposure.
(306) "Radiographic imaging system" means any system whereby a permanent or semi−permanent image is recorded on an image receptor by the action of ionizing radiation.
(307) "Radiographic operations" means all activities performed with a radiographic exposure device or with a radiation
machine. Activities include using, transporting, except by comm. or contract carriers or storing at a temporary job site, performing surveys to confirm the adequacy of boundaries, setting up equipment and any activity inside restricted area boundaries. Transporting a radiation machine is not considered a radiographic operation.
(308) "Radionuclide" means a radioactive form of an element.
(309) "Rating" means the operating limits as specified by the component manufacturer.
(310) "Redundant beam monitoring system" means a combination of 2 dose monitoring systems in which each system is designed to terminate irradiation under a pre−selected number of dose monitor units.

Unofficial Text (See Printed Volume). Current through date and Register shown on Title Page.

(311) "Reference man" means a hypothetical aggregation of human physical and physiological characteristics determined by international consensus. These characteristics may be used by researchers and public health workers to standardize results of experiments and to relate biological insult to a common base.

(312) "Reference plane" means a plane that is displaced from and parallel to the tomographic plane.

(313) "Regulations of the U.S. Department of Transportation means the regulations in 49 CFR 100 to 189 and 390 to 397.

(314) "Rem" means the special unit of any of the quantities expressed as dose equivalent.

Note: The dose equivalent in rem is equal to the absorbed dose in rad multiplied by the quality factor. One rem equals 0.01 sievert.

(315) "Research and development" means either of the following:

(a) Theoretical analysis, exploration or experimentation.

(b) The practical application of investigative findings and theories of a scientific or technical nature for experimental and demonstration purposes, including the experimental production and testing of models, devices, equipment, materials and processes. Research and development does not include the internal or external administration of radiation or radioactive material to human beings.

(316) "Residual radioactivity" means radioactivity in structures, materials, soils, groundwater and other media at a site resulting from activities under the licensee's or registrant's control. "Residual radioactivity" includes radioactivity from all sources used by the licensee or registrant, but excludes background radiation. "Residual radioactivity" also includes radioactive materials remaining at the site as a result of routine or accidental releases of radioactive material at the site and previous burials at the site, even if those burials were made in accordance with the provisions of this chapter.

(317) "Respiratory protective equipment" means an apparatus, such as a respirator, used to reduce an individual's intake of airborne radioactive materials.

(318) "Restricted area" means an area, access to which is limited by the licensee or registrant for the purpose of protecting individuals against undue risks from exposure to sources of radiation. "Restricted area" does not include areas used as residential quarters, but separate rooms in a residential building may be set apart as a restricted area.

(319) "Roentgen" or "R" means the special unit of exposure. One roentgen equals 2.58E−4 coulombs per kilogram of air.

Note: See the definition of the term "exposure" and also s. DHS 157.06 (4) for a further explanation of units of exposure.

(320) "Sanitary sewerage" means a system of public sewers for carrying off wastewater and refuse, but excluding sewage treatment facilities, septic tanks and leach fields owned or operated by the licensee or registrant.

(321) "Scan" means the complete process of collecting x−ray transmission data for the production of a tomogram. Data may be collected simultaneously during a single scan for the production of one or more tomograms.

(322) "Scan increment" means the amount of relative displacement of the patient with respect to the CT x−ray system
between successive scans measured along the direction of such displacement.

(323) "Scan sequence" means a pre−selected set of 2 or more scans performed consecutively under pre−selected CT conditions of operation.

(324) "Scan time" means the period of time between the beginning and end of x−ray transmission data accumulation for a single scan.

(325) "Scattered radiation" means ionizing radiation emitted by interaction of ionizing radiation with matter, the interaction being accompanied by a change in direction of the radiation.

(326) "SCO−I" means a surface contaminated object (SCO) for which all of the following apply:

(a) The non−fixed contamination on the accessible surface averaged over 300 cm^2 (or the area of the surface if less than 300 cm^2) does not exceed 4 Bq/cm^2 (10^{-4} microcurie/cm^2) for beta and gamma and low toxicity alpha emitters, or 0.4 Bq/cm^2 (10^{-5} microcurie/cm^2) for all other alpha emitters.

(b) The fixed contamination on the accessible surface averaged over 300 cm^2 (or the area of the surface if less than 300 cm^2) does not exceed $4x10^4$ Bq/cm^2 (1.0 microcurie/cm^2) for beta and gamma and low toxicity alpha emitters, or $4x10^3$ Bq/cm^2 (0.1 microcurie/cm^2) for all other alpha emitters.

(c) The non−fixed contamination plus the fixed contamination on the inaccessible surface averaged over 300 cm^2 (or the area of the surface if less than 300 cm^2) does not exceed $4x10^4$ Bq/cm^2 (1.0 microcurie/cm^2) for beta and gamma and low toxicity alpha emitters, or $4x10^3$ Bq/cm^2 (0.1 microcurie/cm^2) for all other alpha emitters.

Unofficial Text (See Printed Volume). Current through date and Register shown on Title Page.

(327) "SCO−II" means a surface contaminated object (SCO) for which the limits for SCO−1 are exceeded and on which all of the following apply:
(a) The non−fixed contamination on the accessible surface averaged over 300 cm2 (or the area of the surface if less than 300 cm^2) does not exceed 400 Bq/cm^2 (10^{-2} microcurie/cm^2) for beta and gamma and low toxicity alpha emitters, or 40 Bq/cm^2 (10^{-3} microcurie/cm^2) for all other alpha emitters.
(b) The fixed contamination on the accessible surface averaged over 300 cm^2 (or the area of the surface if less than 300 cm^2) does not exceed $8x10^5$ Bq/cm^2 (20 microcurie/cm^2) for beta and gamma and low toxicity alpha emitters, or $8x10^4$ Bq/cm^2 (2 microcurie/cm^2) for all other alpha emitters.
(c) The non−fixed contamination plus the fixed contamination on the inaccessible surface averaged over 300 cm^2 (or the area of the surface if less than 300 cm^2) does not exceed $8x10^5$ Bq/cm^2 (20 microcurie/cm^2) for beta and gamma and low toxicity alpha emitters, or $8x10^4$ Bq/cm2 (2 microcurie/cm^2) for all other alpha emitters.
(328) "Sealed source" means any radioactive material that is encased in a capsule designed to prevent leakage or escape of the radioactive material.
(329) "Sealed Source and Device Registry" or "SSDR" means the national registry that contains all the registration certificates, maintained by the NRC that summarize the radiation safety information for the sealed sources and devices and describe the licensing and use conditions approved for the product.
(330) "Secondary dose monitoring system" means a system that will terminate irradiation in the event of failure of the primary dose monitoring system.
(331) "Secondary protective barrier" means the material that attenuates stray radiation.
(332) "Self−contained breathing apparatus" or "SCBA" means an atmosphere−supplying respirator for which the breathing air source is designed to be carried by the user.
(333) "Shadow tray" means a device attached to the radiation head to support auxiliary beam blocking material.
(334) "Shallow dose equivalent" or "H_s" means the dose equivalent at a tissue depth of 0.007 centimeter (7 mg/cm^2). "Shallow dose equivalent" applies to the external exposure of the skin of the whole body or the skin of an extremity.
(335) "SI" means the abbreviation for the International System of Units.
(336) "Shielded position" means the location within the radiographic exposure device, source changer or storage container that, by manufacturer's design, is the proper location for storage of the sealed source.
(337) "Shutter" means a device attached to the tube housing assembly which may totally intercept the useful beam and which has a lead equivalency not less than that of the tube housing assembly.
(338) "Sievert" or "Sv" means the SI unit of dose equivalent. The unit of dose equivalent is the joule per kilogram. The special unit of dose equivalent (rem) is being replaced by the sievert. 1 Sv=100 rem.
(339) "Single tomogram system" means a CT x−ray system which obtains x−ray transmission data during a scan to produce a single tomogram.
(340) "Site area emergency" means an event may occur, is in progress, or has occurred that could lead to a significant release of radioactive material and require a response by offsite response organizations to protect people offsite.
(341) "Site boundary" means that line beyond which the land or property is not owned, leased or otherwise controlled by the licensee or registrant.
(342) "Source" means the region and material from which the radiation emanates.
(343) "Source applicator" means a device used to place a radioactive source in a precise anatomical location within the body.
(344) "Source assembly" means an assembly that consists of the sealed source and a connector that attaches the source to the control cable. The source assembly may include a ballstop to secure the source in the shielded position.
(345) "Source changer" means a device designed and used for replacement of sealed sources in radiographic exposure devices and which may also be used for transporting and storing sealed sources.
(346) "Source holder" means a housing or assembly into which a radioactive source is placed to facilitate the handling and use of the source in well logging operations.
(347) "Source−image receptor distance" or "SID" means the distance from the source of radiation to the center of the input surface of the image receptor.
(348) "Source material" means either of the following:
(a) Uranium or thorium, or any combination thereof, in any physical or chemical form.

Unofficial Text (See Printed Volume). Current through date and Register shown on Title Page.

(b) Ores that contain by weight one−twentieth of one percent or more of uranium, thorium or any combination of uranium and thorium. Source material does not include special nuclear material.

(349) "Special form radioactive material" means radioactive material that satisfies all the following conditions:

(a) It is either a single solid piece or is contained in a sealed capsule that may be opened only by destroying the capsule.

(b) The piece or capsule has at least one dimension not less than 5 millimeters (0.2 in.).

(c) It satisfies the test requirements specified by the NRC in 10 CFR 71.75 at the time of its design or construction.

(350) "Special nuclear material" means plutonium, uranium 233, uranium enriched in the isotope 233 or in the isotope 235, and any other material which the nuclear regulatory commission determines to be special nuclear material; or any material artificially enriched by any of the foregoing. Special nuclear material does not include source material.

(351) "Special nuclear material in quantities not sufficient to form a critical mass" means uranium enriched in the isotope U−235 in quantities not exceeding 350 grams of contained U−235; uranium−233 in quantities not exceeding 200 grams; plutonium in quantities not exceeding 200 grams; or any combination of them under the following formula: For each kind of special nuclear material, determine the ratio between the quantity of that special nuclear material and the quantity specified above for the same kind of special nuclear material. The sum of such ratios for all of the kinds of special nuclear material in combination may not exceed one.

Note: For example, the following quantities in combination would not exceed the limitation and are within the formula:

$$\frac{175(grams\ contained\ U-235)}{350}+\frac{50(grams\ \ U-233)}{200}+\frac{50(grams\ Pu)}{200}=1$$

(352) "Special unit" means the alternative system of units for quantifying absorbed dose in rad, dose equivalent in rem and radioactivity in curie.

(353) "Specific activity" of a radionuclide means the radioactivity of the radionuclide per unit mass of that nuclide. The specific activity of a material in which the radionuclide is essentially uniformly distributed is the radioactivity per unit mass of the material.

(354) "Specific license" means a license, under requirements prescribed by the department by rule, to possess, use, manufacture, produce, transfer or acquire radioactive material or devices or equipment utilizing radioactive material.

(355) "Spot film" means a radiograph, which is made during a fluoroscopic examination to permanently record conditions that exist during that fluoroscopic procedure.

(356) "Spot−film device" means a device intended to transport and position a radiographic image receptor between an x−ray source and fluoroscopic image receptor. It includes a device intended to hold a cassette over the input end of an image intensifier for the purpose of making a radiograph.

(357) "Stationary beam radiation therapy" means radiation therapy without displacement of one or more mechanical axes relative to the patient during irradiation.

(358) "Stationary x−ray equipment" means x−ray equipment that is installed in a fixed location.

(359) "Stereotactic radiosurgery" means the use of external radiation in conjunction with a stereotactic guidance device to deliver a dose to a tissue volume from multiple sources of radiation simultaneously.

(360) "Stochastic effect" means a health effect that occurs randomly and for which the probability of the effect occurring, rather than its severity, is assumed to be a linear function of dose without threshold. Hereditary effects and cancer incidence are examples of stochastic effects.

(361) "Storage area" means any secure location, facility or vehicle that is used to store and secure a radiographic exposure device, a radiation machine, a storage container or a sealed source, when it is not in use.

(362) "Storage container" means a device in which sealed sources or radiation machines are secured and stored.

(363) "Stray radiation" means the sum of leakage and scattered radiation.

(364) "Structured educational program" means an educational program designed to impart particular knowledge and practical education through interrelated studies and supervised training.

Unofficial Text (See Printed Volume). Current through date and Register shown on Title Page.

(365) "S−tube" means a tube through which the radioactive source travels when inside a radiographic exposure device.
(366) "Subsurface" means below the surface of the earth.
(367) "Subsurface tracer study" means the release of a substance tagged with radioactive material to trace the movement or position of the tagged substance in the well−bore or adjacent formation.
(368) "Supplied−air respirator" or "SAR" means an atmosphere− supplying respirator for which the source of breathing air is not designed to be carried by the user.
(369) "Surface casing for protecting fresh water aquifers" means a pipe or tube used as a lining in a well to isolate fresh water aquifers from the well.
(370) "Surface contaminated object" or "SCO" means a solid object that is not itself classed as radioactive material, but which has radioactive material distributed on any of its surfaces.
(371) "Survey" means an evaluation of the radiological conditions and potential hazards incident to the production, use, transfer, release, disposal or presence of sources of radiation. When appropriate, an evaluation includes tests, physical examinations and measurements of levels of radiation or concentrations of radioactive material present.
(371m) "Tailing" means the residual material resulting from the extraction of minerals from the earth.
(372) "Target" means that part of an x−ray tube or accelerator onto which a beam of accelerated particles is directed to produce ionizing radiation or other particles.
(373) "Target−skin distance" or "TSD" means the distance measured along the beam axis from the center of the front surface of the x−ray target or electron virtual source to the surface of the irradiated object or patient.
(374) "Technique factors" means the following conditions of operation:
(a) For capacitor energy storage equipment, peak tube potential in ~~kV~~ kilovoltage and quantity of charge in ~~mAs.~~millamperage-seconds (mAs).
(b) For field emission equipment rated for pulsed operation, peak tube potential in kV and number of x−ray pulses.
(c) For CT ~~x−ray systems~~ equipment designed for pulsed operation, peak tube potential in kV, scan time in seconds, and either tube current in millamperes ~~mA~~ (mA), x−ray pulse width in milliseconds, and the number of x−ray pulses per scan; or the product of tube current, x−ray pulse width, and the number of x−ray pulses per scan expressed as mAs.
(d) For CT x−ray ~~systems~~ equipment not designed for pulsed operation, peak tube potential in kV, and either tube current in mA and scan time in seconds, or the product of tube current and exposure time in mAs and the scan time when the scan time and exposure time are equivalent.
(e) For all other equipment, peak tube potential in kV and either tube current in mA and exposure time in seconds or the product of tube current and exposure time in mAs.
(375) "Teletherapy" means a method of radiation therapy in which collimated gamma rays are delivered from a source at a distance from the patient or human research subject.
(376) "Temporary job site" means a location where any of the following occur:
(a) Radiographic operations are performed and sources of radiation may be stored other than at the location or locations of use authorized on the license or registration.
(b) Radioactive materials are present for the purpose of performing well logging or subsurface tracer studies.
(377) "Tenth−value layer" or "TVL" means the thickness of a specified material that attenuates x−radiation or gamma radiation to an extent that the air kerma rate; exposure rate or absorbed dose rate is reduced to one−tenth of the value measured without the material at the same point.
(378) "Termination of irradiation" means the stopping of irradiation in a fashion that will not permit continuance of irradiation without the resetting of operating conditions at the control panel.
(379) "Test" means the process of verifying compliance with an applicable regulation.
(380) "Therapeutic dosage" means a dosage of an unsealed radioactive material that is intended to deliver a radiation dose to a patient or human research subject for palliative or curative treatment.
(381) "Therapeutic dose" means a radiation dose delivered from a sealed source containing radioactive material to a patient or human research subject for palliative or curative treatment.
(382) "Therapeutic radiation machine" means x−ray, gamma ray or electron−producing equipment designed and used for external beam or internal radiation therapy.

Unofficial Text (See Printed Volume). Current through date and Register shown on Title Page.

(383) "Thermoluminescent dosimeter" or "TLD" means a dosimeter containing a crystalline solid for measuring radiation dose, plus filters to help characterize the types of radiation encountered. When heated, TLD crystals that have been exposed to ionizing radiation give off light proportional to the energy they received from the radiation.
(384) "Tight−fitting facepiece" means a respiratory inlet covering that forms a complete seal with the face.
(385) "Tomogram" means the depiction of the x−ray attenuation properties of a section through the body.
(386) "Tomographic plane" means that geometric plane which is identified as corresponding to the output tomogram.
(387) "Tomographic section" means the volume of an object whose x−ray attenuation properties are imaged in a tomogram.
(388) "Total effective dose equivalent" or "TEDE" means the sum of the ~~deep~~ effective dose equivalent for external exposures and the committed effective dose equivalent for internal exposures.
(389) "Total organ dose equivalent" or "TODE" means the sum of the deep dose equivalent and the committed dose equivalent to the organ receiving the highest dose.
(390) "Transport index" or "TI" means the dimensionless number, rounded up to the next tenth, placed on the label of a package to designate the degree of control to be exercised by the carrier during transportation. The transport index is the number is determined by multiplying the maximum radiation level in millisievert (mSv) per hour at one meter (3.3 feet) from the external surface of the package by 100, which is equivalent to the maximum radiation level in millirem per hour at one meter (3.3 ft).
(391) "Transuranic waste" means waste containing elements having an atomic number greater than 92, a half−life greater than 5 years and in quantities greater than 3.7 kBq/gm (100 nCi/gm).
(392) "Treatment site" means the anatomical description of the tissue intended to receive a radiation dose, as described in a written directive.
(393) "Tritium neutron generator target source" means a tritium target source used within a neutron generator tube to produce neutrons for use in well logging applications.
(394) "Tube housing assembly" means the tube housing with tube installed. It includes high−voltage, filament transformers and other appropriate elements which are contained within the tube housing.
(395) "Tube" means an x−ray tube, unless otherwise specified.
(396) "Type A package" means a packaging that, together with its radioactive contents limited to A1 or A2 as appropriate, meets the requirements of 49 CFR 173.410 and 173.412 and is designed to retain the integrity of containment and shielding required under normal conditions of transport as demonstrated by the tests set forth in 49 CFR 173.465 or 173.466, as appropriate.
(397) "Type A quantity" means a quantity of radioactive material, the aggregate radioactivity of which does not exceed A1 for special form radioactive material or A2 for normal form radioactive material, where A1 and A2 are given in Appendix O or may be determined by procedures described in Appendix O.
(398) "Type B package" means a packaging that, together with its radioactive contents, is designed to retain the integrity of containment and shielding required by 49 CFR 173 when subjected to the normal conditions of transport and hypothetical accident test conditions set forth in 10 CFR 71.
Note: A Type B package design is designated as B(U) or B(M). B(U) refers to the need for unilateral approval of international shipments; B(M) refers to the need for multilateral approval. No distinction is made in how packages with these designations may be used in domestic transportation. To determine their distinction for international transportation, refer to 49 CFR Part 173. A Type B package approved prior to September 6, 1983 was designated only as Type B.
(399) "Type B quantity" means a quantity of radioactive material greater than a type A quantity.
(400) "Type of use" means use of radioactive material as specified in s. DHS 157.63 (1) or (2), 157.64 (1), 157.65 (1), 157.66 (1) or 157.67 (1).
(401) "Underwater irradiator" means an irradiator in which the sources always remain shielded under water and humans do not have access to the sealed sources or the space subject to irradiation without entering the pool.
(402) "Underwater radiography" means industrial radiography performed when the radiographic exposure device and related equipment are beneath the surface of the water.
(402m) "Unirradiated uranium" means uranium containing not more than 2 X 10^3 Bq of plutonium per gram of uranium−235, not more than 9 X 10^6 Bq of fission products per gram of uranium− 235, and not more than 5 X 10^{-3} g of uranium−236 per gram of uranium−235.
(403) "Unit dosage" means a quantity of radioactive material that meets all the following criteria:
(a) Is obtained or prepared under the requirements in s. DHS 157.63 (1) or (2) or 157.64 (1).

Unofficial Text (See Printed Volume). Current through date and Register shown on Title Page.

(b) Is to be administered as a single dosage to a patient or human research subject without any further manipulation of the dosage after it is initially prepared, except to adjust the dosage to patient needs.

(404) "Unrefined and unprocessed ore" means ore in its natural form prior to any processing, such as grinding, roasting, refining or altering the ore from its natural state.

(405) "Unrestricted area" or "uncontrolled area" means an area, access to which is neither limited nor controlled by the licensee or registrant.

(406) "Uranium sinker bar" means a weight containing depleted uranium used to pull a logging tool down toward the bottom of a well.

(407) "Useful beam" means the radiation ~~emanating from~~ which passes through the tube housing port ~~or~~ and ~~the radiation head and passing through~~ the aperture of the beam−limiting device when the exposure ~~controls are in a mode to cause the system to produce radiation.~~ switch or timer is activated.

(408) "User seal check" means an action conducted by the respirator user to determine if the respirator is properly seated to the face. Examples include negative pressure check, positive pressure check, irritant smoke check, or isoamyl acetate check.

(409) "Variable−aperture beam−limiting device" means a beam−limiting device that has capacity for stepless adjustment of the x−ray field size at a given SID.

(410) "Very high radiation area" means an area, accessible to individuals, in which radiation levels from radiation sources external to the body could result in an individual receiving an absorbed dose in excess of 5 Gy (500 rad) in one hour at one meter from a source of radiation or one meter from any surface that the radiation penetrates.

(411) "Virtual source" means a point from which radiation appears to originate.

(412) "Visible area" means that portion of the input surface of the image receptor over which incident x−ray photons are producing a visible image.

(413) "Waste" means those ~~materials having a low level of radioactivity containing that are acceptable for disposal in a land disposal facility and are not classified as high−level radioactive waste, transuranic waste, spent nuclear fuel, or byproduct material as defined in 42 USC 2011~~. low-level radioactive wastes containing source, special nuclear, or byproduct material that are acceptable for disposal in a land disposal facility. For the purposes of this definition, low-level radioactive waste means radioactive waste not classified as high-level radioactive waste, transuranic waste, spent nuclear fuel, or byproduct material as defined in DHS 157.03 (50) (b) to (e).

(414) "Waste handling licensee" mean a person licensed to receive and store radioactive residue prior to disposal and a person licensed to dispose of radioactive residue.

(415) "Wedge filter" means a filter which effects continuous change in transmission over all or a part of the useful beam.

(416) "Week" means 7 consecutive days starting on Sunday.

(417) "Weighting factor" or "w_T" for an organ or tissue means the proportion of the risk of stochastic effects resulting from irradiation of that organ or tissue to the total risk of stochastic effects when the whole body is irradiated uniformly. For calculating the effective dose equivalent, the values of w_T are:

Organ Dose Weighting Factors

Organ or Tissue	w_T
Gonads	0.25
Breast	0.15
Red bone marrow	0.12
Lung	0.12
Thyroid	0.03
Bone surfaces	0.03
Remainder	0.30[a/]
Whole Body	1.00[b/]

a/ 0.30 results from 0.06 for each of 5 "remainder" organs, excluding the skin and the lens of the eye, that receive the highest doses.
b/ For the purpose of weighting the external whole body dose, for adding it to the internal dose, a single weighting factor, $w_T = 1.0$, has been specified. The department shall approve the use of other weighting factors for external exposure on a case−by−case basis until such time as specific guidance is issued.

(418) "Well" means a drilled hole in which well logging may be performed.

(419) "Well logging" means all operations involving the lowering and raising of measuring devices or tools which may contain sources of radiation into wells or cavities for the purpose of obtaining information

Unofficial Text (See Printed Volume). Current through date and Register shown on Title Page.

about the well or adjacent formations which may be used in oil, gas, mineral, groundwater or geological exploration.

(419m) "Well−logging assistant" means any individual who, under the personal supervision of a well logging supervisor, handles sources of radiation that are not in logging tools or shipping containers or who performs surveys required by s. DHS 157.55.

(420) "Well logging supervisor" means any individual who uses sources of radiation or provides personal supervision of the use of sources of radiation at the well site and who is responsible for assuring compliance with the requirements of this chapter.

(421) "Well logging tool" means a device used subsurface to perform well logging.

(422) "Whole body" means, for purposes of external exposure, head, trunk including male gonads, arms above the elbow or legs above the knee.

(423) "Wipe sample" means a piece of material used to wipe over the area of a surface or device to collect radioactive contamination.

(426) "Worker" means an individual engaged in work under a license or registration issued by the department and controlled by a licensee or registrant, but does not include the licensee or registrant.

(427) "Working level" or "WL" means any combination of short−lived radon daughters in one liter of air that will result in the ultimate emission of 1.3E+5 MeV of potential alpha particle energy. The short−lived radon daughters are for radon−222: polonium− 218, lead−214, bismuth−214 and polonium−214; and for radon−220: polonium−216, lead−212, bismuth−212, and polonium− 212.

(428) "Working level month" or "WLM" means an exposure to one working level for 170 hours. Two thousand working hours per year divided by 12 months per year is approximately equal to 170 hours per month.

(429) "Written directive" means an authorized user's written order for the administration of radioactive material or radiation from radioactive material or a radiation machine to a specific patient or human research subject.

(430) "X−ray equipment" means an x−ray system, subsystem or component thereof that is one of the following:

(a) Mobile x−ray equipment.

(b) Portable x−ray equipment.

(c) Stationary x−ray equipment**.**

(430m)"X-ray control" means a device which controls input power to the x-ray high-voltage generator and/or the x-ray tube. It includes equipment such as timers, phototimers, automatic brightness stablizers, and similar devices, whch control the technique factors on an x-ray exposure.

(431) "X−ray exposure control" means a device, switch, button or other similar means by which an operator initiates or terminates the radiation exposure. An x−ray exposure control may include such associated equipment as timers and back−up timers.

(432) "X−ray field" means that area of the intersection of the useful beam and any one of the set of planes parallel to and including the plane of the image receptor whose perimeter is the locus of points at which the exposure rate is one−fourth of the maximum in the intersection.

(433) "X−ray high−voltage generator" means a device that transforms electrical energy from the potential supplied by an x−ray control to the tube operating potential. The device may also include means for transforming alternating current to direct current, filament transformers for an x−ray tube or tubes, high−voltage switches, electrical protective devices and other appropriate elements.

(434) "X−ray system" means an assemblage of components for the controlled production of x−rays. It includes minimally an x−ray high−voltage generator, an x−ray control, a tube housing assembly, a beam−limiting device and the necessary supporting structures. Additional components, which function with the system, are considered integral parts of the system.

(435) "X−ray table" means a patient support device with its patient support structure (tabletop) interposed between the patient and the image receptor during radiography or fluoroscopy. An x−ray table includes any stretcher equipped with a radiolucent panel and any table equipped with a cassette tray, cassette tunnel, image intensifier or spot−film device beneath the tabletop.

(436) "X−ray tube" means any electron tube designed to be used primarily for the production of x−rays.

(437) "Year" means the period beginning on January 1st used to determine compliance with the provisions of this chapter. The licensee or registrant may change the starting date of the year used to determine

Unofficial Text (See Printed Volume). Current through date and Register shown on Title Page.

compliance by the licensee or registrant provided that the change is made at the beginning of the year and that no day is omitted or duplicated in consecutive years.

History: CR 01−108: cr. Register July 2002 No. 559, eff. 8−1−02; **CR 06−021: am. (1), (2), (13), (46), (98), (140), (141), (198) (a), (c), (199) (b), (200) (intro.), (c), (201), (210) (a) (intro.), (224), (225), (296), (326), (327), (334), (353), (376) (b), (390), (398), (418), (419) and (428); cr. (17m), (32m), (57g), (57r), (75m), (82m), (84m), (87m), (101m), (103m), (124m), (143m), (150m), (185m), (185r), (197m), (210) (a) 5., (247m), (251m), (264m), (279m), (295m), (371m), (402m) and (419m); r. and recr. (32), (68), (198) (d) and (267); r. (210) (d), (e), (424) and (425)**

DHS 157.04 Exemptions from the regulatory requirements. (1) GENERAL. The department may, upon application or upon its own initiative, grant such exemptions or exceptions from the requirements of this chapter as it determines are authorized by law and will not result in undue hazard to public health and safety or property or endanger the common defense and security.

(2) U.S. DOE AND NRC CONTRACTORS. U.S. department of energy contractors or subcontractors and any NRC contractor or subcontractor in any of the following categories operating within this state are exempt from this chapter to the extent that the contractor or subcontractor under their contract receives, possesses, uses, transfers or acquires sources of radiation:

(a) Prime contractors performing work for the U.S. department of energy at U.S. government owned or controlled sites, including the transportation of byproduct material to or from such sites and the performance of contract services during temporary interruptions of such transportation.

(b) Prime contractors of the U.S. department of energy performing research in, or development, manufacture, storage, testing or transportation of atomic weapons or components of atomic weapons.

(c) Prime contractors of the U.S. department of energy using or operating nuclear reactors or other nuclear devices in a United States government owned vehicle or vessel.

(d) Any other prime contractor or subcontractor of the U.S. department of energy or of the NRC when the state and the NRC jointly determine all the following:

1. The exemption of the prime contractor or subcontractor is authorized by law.

2. Under the terms of the contract or subcontract, there is adequate assurance that the work may be accomplished without undue risk to the public health and safety.

History: CR 01−108: cr. Register July 2002 No. 559, eff. 8−1−02.

DHS 157.05 Prohibitions. (1) DEVICES. The following devices may not be used in Wisconsin:

(a) A hand−held fluoroscopic screen unless it has been listed in the Registry of Sealed Source and Devices.

(b) A shoe−fitting fluoroscopic device.

(2) DELIBERATE MISCONDUCT. No person may do any of the following:

(a) Engage in deliberate misconduct that causes or would have caused, if not detected, a licensee, registrant or applicant under this chapter to be in violation of any rule or order of the department;or any term, condition or limitation of any license or registration issued by the department under this chapter.

(b) Deliberately submit to the department; a licensee, registrant or applicant under this chapter; or a contractor or subcontractor of a licensee, registrant or applicant under this chapter; any information that the person knows to be incomplete or inaccurate.

(3) RADIATION SURVEY INSTRUMENTATION. No person may operate a portable device containing radioactive material designed to measure moisture content or density of materials unless calibrated and operable radiation survey instrumentation that meets the requirements of s. DHS 157.52 (4) (a), (b) and (c) is available for use at each site where the portable devices are used.

(4) TRAINING. (a) No person may use a portable device containing radioactive material used to measure moisture content or density of materials or determine lead content of paint unless the person has completed 8 hours of manufacturer's training or equivalent training that meets the requirements of Appendix S..

(b) A person providing equivalent training under par. (a) for certified lead inspectors or risk assessors shall meet the qualification requirements of s. DHS 163.24 (3) (a) 1. and 3. and shall complete an additional 8 hours of radiation safety training.

(5) PHYSICAL CONTROLS. No person may use a portable device containing radioactive material designed to measure moisture content or density of materials unless there is a minimum of 2 independent physical controls that form tangible barriers to secure the device from unauthorized removal, whenever the device is not under the control and constant surveillance of the licensee.**History:** CR 01−108: cr. Register July 2002 No. 559, eff. 8−1−02; **CR 06−021: am. (1) (a) and (3), cr. (5) Register October 2006 No. 610, eff. 11−1−06.**

DHS 157.06 General regulatory requirements.

Unofficial Text (See Printed Volume). Current through date and Register shown on Title Page.

(1) RECORDS. A licensee or registrant shall maintain records showing the receipt, transfer and disposal of all sources of radiation until the department terminates the license or registration authorizing possession of the device or material, and for 3 years following transfer or disposal of the device or material.
Note: Additional record requirements are specified elsewhere in this chapter.
(2) INSPECTIONS. (a) A licensee or registrant shall afford the department at all reasonable times opportunity to inspect sources of radiation, packaging and the premises and facilities on which the sources of radiation are used or stored and consult with workers.
(b) Each licensee and registrant shall make available to the department for inspection, upon reasonable notice, records maintained under this chapter.
(c) The department shall provide official notification in writing of the inspection findings, including any notice of violation, to the licensee or registrant.
(3) TESTS. A licensee or registrant shall perform upon instructions from the department, or shall permit the department to perform, such reasonable tests as the department deems appropriate or necessary including tests of any of the following:
(a) Sources of radiation.
(b) Facilities wherein sources of radiation are used or stored.
(c) Radiation detection and monitoring instruments.
(d) Other equipment and devices used with utilization or storage of licensed or registered sources of radiation.
(4) UNITS OF EXPOSURE AND DOSE. (a) The unit of exposure is the coulomb per kilogram of air. One roentgen is equal to 2.58E−4 coulomb per kilogram of air.
(b) The units of dose are any of the following:
1. Gray is the SI unit of absorbed dose. One gray is equal to an absorbed dose of one joule per kilogram (100 rad).
2. Rad is the special unit of absorbed dose. One rad is equal to an absorbed dose of 100 erg per gram or 0.01 joule per kilogram.
3. Rem is the special unit of any of the quantities expressed as dose equivalent. The dose equivalent in rem is equal to the absorbed dose in rad multiplied by the quality factor. **Note:** 0.01 sievert equals one rem.
4. Sievert is the SI unit of any of the quantities expressed as dose equivalent. The dose equivalent in sievert is equal to the absorbed dose in gray multiplied by the quality factor. **Note:** One sievert equals 100 rem.
(c) The quality factors for converting absorbed dose to dose equivalent are shown in Table DHS 157.06A.

TABLE DHS 157.06A
Quality Factors and Absorbed Dose Equivalencies

Type of Radiation	Quality Factor (Q)	Absorbed Dose Equal to a Unit Dose Equivalent
X, gamma, or beta radiation and high−speed electrons	1	1
Alpha particles, multiple−charged particles, fission fragments and heavy particles of unknown charge	20	0.05
Neutrons of unknown energy	10	0.1
High−energy protons	10	0.1

Note: Absorbed dose in gray equal to one Sv or the absorbed dose in rad equal to one rem.

(d) If it is more convenient to measure the neutron fluence rate than to determine the neutron dose equivalent rate in sievert per hour or rem per hour, as provided in par. (c), 0.01 Sv (1 rem) of neutron radiation of unknown energies may be assumed to result from a total fluence of 25 million neutrons per square centimeter incident upon the body. If sufficient information exists to estimate the approximate energy distribution of the neutrons, a licensee or

Unofficial Text (See Printed Volume). Current through date and Register shown on Title Page.

registrant may use the fluence rate per unit dose equivalent or the appropriate Q value from Table DHS 157.06B to convert a measured tissue dose in gray or rad to dose equivalent in sievert or rem.

TABLE DHS 157.06B
Mean Quality Factors, Q, and Fluence Per Unit Dose Equivalent For Monoenergetic Neutrons

	Neutron Energy (MeV)	Quality Factora (Q)	Fluence per unit Dose Equivalentb (neutrons cm^{-2} rem^{-1})	Fluence per unit dose Equivalent (neutrons cm^{-2} Sv^{-1})
(thermal)	2.5E−8	2	980E+6	980E+8
	1E−7	2	980E+6	980E+8
	1E−6	2	810E+6	810E+8
	1E−5	2	810E+6	810E+8
	1E−4	2	840E+6	840E+8
	1E−3	2	980E+6	980E+8
	1E−2	2.5	1010E+6	1010E+8
	1E−1	7.5	170E+6	170E+8
	5E−1	11	39E+6	39E+8
	1	11	27E+6	27E+8
	2.5	9	29E+6	29E+8
	5	8	23E+6	23E+8
	7	7	24E+6	24E+8
	10	6.5	24E+6	24E+8
	14	7.5	17E+6	17E+8
	20	8	16E+6	16E+8
	40	7	14E+6	14E+8
	60	5.5	16E+6	16E+8
	1E+2	4	20E+6	20E+8
	2E+2	3.5	19E+6	19E+8
	3E+2	3.5	16E+6	16E+8
	4E+2	3.5	14E+6	14E+8

[a] Value of quality factor at the point where the dose equivalent is maximum in a 30−centimeter diameter cylinder tissue−equivalent phantom.
[b] Monoenergetic neutrons incident normally on a 30−centimeter diameter cylinder tissue−equivalent phantom.

(5) UNITS OF ACTIVITY. For purposes of this chapter, activity is expressed in the SI unit of becquerel or in the special unit of curie, or their multiples, or disintegrations or transformations per unit of time. One becquerel = one disintegration or transformation per second. One curie = 3.7E+10 disintegrations or transformations per second = 3.7E+10 becquerel = 2.22E+12 disintegrations or transformations per minute.
History: CR 01−108: cr. Register July 2002 No. 559, eff. 8−1−02.

Subchapter II — Licensing of Radioactive Material

DHS 157.09 Exemptions. (1) EXEMPTIONS OF SOURCE MATERIAL. (a) A person is exempt from this subchapter if the person receives, possesses, uses, owns or transfers any of the following types and forms of source material:

1. Any chemical mixture, compound, solution or alloy in which the source material by weight is less than 1/20 of one percent of the mixture, compound, solution or alloy.
2. Unrefined and unprocessed ore containing source material provided that, except as authorized in a specific license, the person does not refine or process the ore.
3. Rare earth metals and compounds, mixtures and products containing not more than 0.25% by weight thorium, uranium or any combination of these.
4. Any quantities of thorium contained in any of the following:

a. Incandescent gas mantles.

Unofficial Text (See Printed Volume). Current through date and Register shown on Title Page.

b. Vacuum tubes.
c. Welding rods.
d. Electric lamps for illuminating purposes provided that a lamp does not contain more than 50 milligrams of thorium.
e. Germicidal lamps, sunlamps and lamps for outdoor or industrial lighting provided that a lamp does not contain more than 2 grams of thorium.
f. Personnel neutron dosimeters, provided that a dosimeter does not contain more than 50 milligrams of thorium.
5. Source material contained in any of the following products:
a. Glazed ceramic tableware, provided that the glaze contains not more than 20% by weight source material.
b. Glassware containing not more than 10% by weight source material, but not including commercially manufactured glass brick, pane glass, ceramic tile or other glass or ceramic used in construction.
c. Glass enamel or glass enamel frit containing not more than 10% by weight source material imported or ordered for importation into the United States or initially distributed by manufacturers in the United States, before July 25, 1983.
d. Piezoelectric ceramic containing not more than 2% by weight source material.
6. Photographic film, negatives and prints containing uranium or thorium.
7. Any finished product or part fabricated of tungsten−thorium or magnesium−thorium alloys, or containing tungsten−thorium or magnesium−thorium alloys, provided that the thorium content of the alloy does not exceed 4% by weight and that this exemption is not deemed to authorize the chemical, physical or metallurgical treatment or processing of any product or part.
8. Uranium contained in counterweights installed in aircraft, rockets, projectiles or missiles or stored or handled in connection with installation or removal of the counterweights, under all of the following conditions:
a. The counterweights are manufactured under a specific license issued by the NRC, authorizing distribution by the
licensee under 10 CFR 40.
b. Each counterweight has been impressed with the following legend clearly legible through any plating or other covering: “DEPLETED URANIUM”. This requirement need not be met by counterweights manufactured prior to December 31, 1969 provided that the counterweights are impressed with the legend “CAUTION – RADIOACTIVE MATERIAL – URANIUM”.
c. Each counterweight is durably and legibly labeled or marked with the identification of the manufacturer and the statement, “UNAUTHORIZED ALTERATIONS PROHIBITED”. This requirement need not be met by counterweights manufactured prior to December 31, 1969 provided that the counterweights are impressed with the legend “CAUTION – RADIOACTIVE MATERIAL – URANIUM”.
d. This exemption may not be deemed to authorize the chemical, physical or metallurgical treatment or processing of any of these counterweights other than repair or restoration of any plating or other covering.
9. Natural or depleted uranium metal used as shielding constituting part of any shipping container, provided that the shipping container is conspicuously and legibly impressed with the legend “CAUTION − RADIOACTIVE SHIELDING − URANIUM”; and the uranium metal is encased in mild steel or equally fire resistant metal of minimum wall thickness of 3.2 millimeter (one− eighth inch).
10. Thorium contained in finished optical lenses, provided that a lens does not contain more than 30% by weight of thorium and that this exemption is not deemed to authorize either of the following:
a. The shaping, grinding or polishing of the lens or manufacturing processes other than the assembly of the lens into optical systems and devices without any alteration of the lens.
b. The receipt, possession, use or transfer of thorium contained in contact lenses, spectacles, eyepieces in binoculars or
other optical instruments.
11. Uranium contained in detector heads for use in fire detection units, provided that a detector head contains not more than 185 becquerel (0.005 microcurie) of uranium.
12. Thorium contained in any finished aircraft engine part containing nickel−thoria alloy, provided that the thorium is dispersed in the alloy in the form of finely divided thoria, and the thorium content in the nickel−thoria alloy does not exceed 4% by weight.
(b) The exemptions in par. (a) do not authorize the manufacture of any of the products described.

Unofficial Text (See Printed Volume). Current through date and Register shown on Title Page.

(2) EXEMPTIONS OF RADIOACTIVE MATERIAL OTHER THAN SOURCE MATERIAL. (a) *Exempt concentrations.* Except as provided in this paragraph, a person is exempt from this subchapter to the extent that the person receives, possesses, uses, transfers, owns or acquires products containing radioactive material introduced in concentrations no greater than those listed in Appendix A of this chapter. A person may not introduce radioactive material into a product or material knowing or having reason to believe that it will be transferred to persons exempt under this paragraph or equivalent regulations of the NRC, any agreement state or licensing state, except under a specific license issued under s. DHS 157.13 (4) (a) or the general licenses under s.. DHS 157.14.

1. This paragraph does not authorize the import of radioactive material or products containing radioactive aterial.

2. A manufacturer, processor or producer of a product or material is exempt from the requirements of subch. II if they transfer radioactive material contained in a product or material in concentrations not in excess of those in Appendix A and introduced into the product or material by a licensee holding a specific license issued by the department, the NRC or another agreement state expressly authorizing such introduction. This exemption does not apply to the transfer of radioactive material contained in any food, beverage, cosmetic, drug, or other commodity or product designed for ingestion or inhalation by, or application to, a human being.

(b) *Exempt quantities.* Except as provided in this paragraph, a person is exempt from this subchapter to the extent that the person receives, possesses, uses, transfers, owns or acquires radioactive material in individual quantities each of which does not exceed the applicable quantity set forth in Appendix B of this chapter.

1. This paragraph does not authorize the production, packaging or repackaging of radioactive material for purposes of commercial distribution or the incorporation of radioactive material into products intended for commercial distribution.

2. No person may, for purposes of commercial distribution, transfer radioactive material in the individual quantities set forth in Appendix B of this chapter to any person exempt from this chapter or equivalent regulations of the NRC, an agreement state or a licensing state, except under a specific license issued by the NRC under 10 CFR 32.18, or by the department under s. DHS 157.13 (4) (b) which license states that the radioactive material may be transferred by the licensee to persons exempt under this paragraph or the equivalent regulations of the NRC, an agreement state or a licensing state.

Note: Authority to transfer possession or control by the manufacturer, processor or producer of any equipment, device, commodity, or other product containing byproduct material whose subsequent possession, use, transfer and disposal by all other persons are exempted from regulatory requirements may be obtained only from the NRC, Washington, D.C., 20555.

(c) *Certain items containing radioactive material.* Except for persons who apply radioactive material to the following products, or incorporate radioactive material into the following products, or initially transfer for sale or distribution the following products, a person is exempt from this subchapter if the person receives, possesses, uses, transfers, owns or acquires any of the following products:

1. Timepieces, hands or dials containing not more than the following specified quantities of radioactive material:

a. 925 MBq (25 millicuries) of tritium per timepiece.

b. 185 MBq (5 millicuries) of tritium per hand.

c. 555 MBq (15 millicuries) of tritium per dial.

Note: Bezels, when used, should be considered as part of the dial.

d. 3.7 MBq (100 microcuries) of promethium−147 per watch or 7.4 MBq (200 millicuries) of promethium−147 per any timepiece.

e. 0.74 MBq (20 microcuries) of promethium−147 per watch hand or 1.48 MBq (40 microcuries) of promethium−147 per other timepiece hand.

f. 2.22 MBq (60 microcuries) of promethium−147 per watch dial or 4.44 MBq (120 microcuries) of promethium−147 per other timepiece dial (bezels when used shall be considered as part of the dial).

2. Timepieces, hands or dials containing promethium−147 ~~or radium−226~~, when measured through 50 milligrams per square centimeter of absorber, not exceeding the following radiation dose rate:

a. For wrist watches, one µGy (0.1 millirad) per hour at 10 centimeters from any surface.

b. For pocket watches, one µGy (0.1 millirad) per hour at one centimeter from any surface.

c. For any other timepiece, 2 µGy (0.2 millirad) per hour at 10 centimeters from any surface.

3. Timepieces containing up to 37 kBq (1.0 microcurie) of radium−226 per timepiece acquired prior to the effective date of ~~August 1, 2002,~~ [effective date].

Unofficial Text (See Printed Volume). Current through date and Register shown on Title Page.

4. Lock illuminators containing not more than 555 MBq (15 millicuries) of tritium or not more than 74 MBq (2 millicuries) of promethium−147 installed in automobile locks. The radiation dose rate from each lock illuminator containing promethium−147 may not exceed 10 µGy (1 millirad) per hour at one centimeter from any surface when measured through 50 milligrams per square centimeter of absorber.
5. Precision balances containing not more than 37 MBq (1 millicurie) of tritium per balance or not more than 18.5 MBq (0.5 millicurie) of tritium per balance part.
6. Automobile shift quadrants containing not more than 925 MBq (25 millicuries) of tritium.
7. Marine compasses containing not more than 27.8 GBq (750 millicuries) of tritium gas and other marine navigational instruments containing not more than 9.25 GBq (250 millicuries) of tritium gas.
8. Thermostat dials and pointers containing not more than 925 MBq (25 millicuries) of tritium per thermostat.
9. Electron tubes, including spark gap tubes, power tubes, gas tubes including glow lamps, receiving tubes, microwave tubes, indicator tubes, pick−up tubes, radiation detection tubes and any other completely sealed tube that is designed to conduct or control electrical currents, provided that the radiation dose rate from each electron tube containing radioactive material does not exceed 10 uGy (1 millirad) per hour at one centimeter from any surface when measured through 7 milligrams per square centimeter of absorber and that each tube does not contain more than one of the following specified quantities of radioactive material:
a. 5.55 GBq (150 millicuries) of tritium per microwave receiver protector tube or 370 MBq (10 millicuries) of tritium per any other electron tube.
b. 37 kBq (1 microcurie) of cobalt−60.
c. 185 kBq (5 microcuries) of nickel−63.
d. 1.11 MBq (30 microcuries) of krypton−85.
e. 185 kBq (5 microcuries) of cesium−137.
f. 1.11 MBq (30 microcuries) of promethium−147.
10. Ionizing radiation measuring instruments containing, for purposes of internal calibration or standardization, one or more sources of radioactive material, provided all the following conditions are met:
a. Each source contains no more than one exempt quantity set forth in Appendix B of this chapter.
b. Each instrument contains no more than 10 exempt quantities. For the purposes of this subd. par., an instrument's source or sources may contain either one or different types of radionuclides and an individual exempt quantity may be composed of fractional parts of one or more of the exempt quantities in Appendix B of this chapter, provided that the sum of the fractions does not exceed unity.
c. For purposes of this subdivision, 1.85 kBq (0.05µCi) of Americium−241 is considered to be an exempt quantity.
11. Spark gap irradiators containing not more than 37 kBq (1 microcurie) of cobalt−60 per spark gap irradiator for use in electrically ignited fuel oil burners having a firing rate of at least 11.4 liters (3 gallons) per hour.
(d) *Self−luminous products containing tritium, krypton−85,or promethium−147* ~~*or radium−226*~~. 1. Except for persons who manufacture, process, produce, or initially transfer for sale or distribution self−luminous products containing tritium, krypton−85 or promethium−147, and except as provided in subd. 3., any person is exempt from this subchapter to the extent that such person receives, possesses, uses, transfers, owns or acquires tritium, krypton−85 or promethium−147 in self−luminous products manufactured, processed, produced or initially transferred under a specific license issued by the NRC according to 10 CFR 32.22, which authorizes the initial transfer of the product for use under this subdivision.
2. Any person who desires to manufacture, process or produce self−luminous products containing tritium, krypton−85 or promethium−147, or to transfer such products for use according to subd. 1., shall apply for a license issued by the NRC according to 10 CFR 32.22, which states that the product may be transferred by the licensee to persons exempt from this subchapter according to subd. 1. or equivalent regulations of the NRC or an agreement state.
3. The exemption in subd. 1. does not apply to tritium, krypton−85 or promethium−147 used in products primarily for frivolous purposes or in toys or adornments.
~~4. Any person who receives, possesses, transfers, uses or owns self−luminous products containing less than 37 kBq (0.1 microcurie) of radium−226 is exempt from this subchapter.~~
(e) *Gas and aerosol detectors containing radioactive material.*
1. Except for persons who manufacture, process, produce or initially transfer for sale or distribution gas and aerosol detectors containing radioactive material, a person is exempt from this subchapter if the person

Unofficial Text (See Printed Volume). Current through date and Register shown on Title Page.

receives, possesses, uses, transfers, owns or acquires radioactive material in gas and aerosol detectors designed to protect life or property from fires and airborne hazards provided that the detectors containing radioactive material have been manufactured, processed, produced or initially transferred for sale or distribution under a specific license issued by the NRC under 10 CFR 32.26, a licensing state, other agreement state or the department under s. DHS 157.13 (4) (c), which authorizes the transfer of the detectors to persons who are exempt from regulatory requirements.

2. Gas and aerosol detectors previously manufactured and distributed to general licensees under the specific license issued by an agreement state shall be considered exempt under this subdivision provided that the device is labeled under the specific license authorizing distribution of the generally licensed device and provided further that they meet the requirements of s. DHS 157.13 (4) (c).

3. Gas and aerosol detectors containing NARM previously manufactured and distributed under a specific license issued by a licensing state shall be considered exempt under this subdivision provided the devices are labeled under the specific license authorizing distribution, and provided further that they meet the requirements of s. DHS 157.13 (4) (c).

(f) *Resins containing scandium−46 and designed for sand−consolidation in oil wells.* A person is exempt from this subchapter to the extent that the person receives, possesses, uses, transfers, owns or acquires synthetic plastic resins containing scandium−46 which are designed for sand consolidation in oil wells. These resins shall have been manufactured or initially transferred for sale or distribution under a specific license issued by the NRC, or shall have been manufactured under the specifications contained in a specific license issued by the department or any agreement state to the manufacturer of the resins ~~under licensing requirements equivalent to those in 10 CFR 32.16 and 32.17~~. This exemption does not authorize the manufacture or initial transfer for sale or distribution of any resins containing scandium−46.

(g) *Radioactive drug capsules containing no more than 37 kBq (1 μCi) carbon−14 urea each for in vivo diagnostic use for humans.* 1. Except as provided in subds. 2. and 3., a person is exempt from this subchapter provided that the person receives, possesses, uses, transfers, owns, or acquires capsules containing 37 kBq (1μ*Ci)* carbon−14 urea (allowing for nominal variation that may occur during the manufacturing process) each, for "in vivo" diagnostic use for humans.

2. Any person who desires to use the capsules for research involving human subjects shall apply for and receive a specific license according to s. DHS 157.13.

3. Any person who desires to manufacture, prepare, process, produce, package, repackage, or transfer for commercial distribution such capsules shall apply for and receive a specific license according to ~~s. DHS 157.13 (4) (i)~~ 10 CFR 32.21.

4. Nothing in this section relieves persons from complying with applicable FDA and other federal and state requirements governing receipt, administration and use of drugs.

Note: Authority to transfer possession or control by the manufacturer, processor or producer of any equipment, device, commodity or other product containing byproduct material whose subsequent possession, use, transfer, and disposal by all other persons are exempted from regulatory requirements may be obtained only from the NRC, Washington, D.C. 20555. **History:** CR 01−108: cr. Register July 2002 No. 559, eff. − see Note at the start of the chapter; **CR 06−021: r. and recr. (2) (a) 2., am. (2) (c) (intro.), 1. a. and 9.a., r. (2) (c) 12. and 15., cr. (2) (d) and (g), renum. (2) (c) 13. and 14. to be (2) (e) and (f) and am. (2) (e) 1. and (f) Register October 2006 No. 610, eff. 11−1−06.**

DHS 157.10 License types and fees. (1) TYPES OF LICENSES. A license for radioactive materials may be one of the following:

(a) *General.* A general license is effective without the filing of an application with the department or the issuance by the department of licensing documents to the particular person, although the filing of a certificate with the department may be required by the particular general license. The general licensee is subject to all other applicable parts of this chapter and any limitations of the general license.

(b) *Specific.* A specific license requires the submission of an application to the department and the issuance of a licensing document by the department. A licensee is subject to all applicable parts of this chapter as well as any limitations specified in the licensing document. A licensee shall pay the license fees as specified in sub. (3).

(2) PAYMENT OF FEES. (a) *Application fee.* An application for a specific license shall be accompanied by payment in the full amount of the fee specified in sub. (3). The department may not process the application prior to receipt of the required fee. The application fee is not refundable except in those cases where the department determines that a license is not required. The department will consider any application abandoned if the department does not receive a reply within 90 days of its most recent request

Unofficial Text (See Printed Volume). Current through date and Register shown on Title Page.

for additional information. In such cases, the applicant shall submit a new application with the application fee specified in sub. (3).
(b) *Annual fee.* A person holding a specific license in effect prior to the effective date of August 1, 2002, or a specific license issued after the effective date of August 1, 2002, shall pay the annual fee specified in sub. (3) at least 60 days prior to the anniversary date of the issuance of the license. The annual fee is not refundable except in those cases where the department determines that the fee is not required.
(c) *Amendment fee.* An application for amendment to a specific license shall be accompanied by payment in full of the fee specified in sub. (3). The department may not process the application prior to the department's receipt of the required fee. The department may not charge an amendment fee to modify a license on its own initiative.
(d) *Reciprocity fee.* A person submitting an application for reciprocal recognition of a materials license issued by an agreement state or the nuclear regulatory commission shall include remittance for the full amount of the fee specified in sub. (3). The department may not process the application prior to the department's receipt of the appropriate fee. Requests for reciprocal recognition approved by the department prior to November 1 shall remain in effect until December 31 of that year. Requests for reciprocal recognition approved on or after November 1 shall remain in effect until December 31 of the subsequent year.
(3) FEE SCHEDULE. The following is the schedule of application, annual, amendment and reciprocity fees for specific radioactive material licenses.

Category	License Type	Application & Annual Fee
1.	**Special Nuclear Material**	
A.	License for possession and use of SNM in sealed sources contained in devices used in measuring systems	$1,000
B.	License for use of SNM to be used as calibration and reference sources	$300
C.	SNM – all other, except license authorizing special nuclear material in unsealed form that would constitute a critical mass [Fee waived if facility holds additional license category]	$1,500
2.	**Source Material**	
A.	Source material processing and distribution	$4,000
B.	Source material in shielding [Fee waived if facility holds additional license category]	$400
C.	Source material – all other, excluding depleted uranium used as shielding or counterweights	$3,000
3.	**Byproduct, NARM**	
A.	License of broad scope for processing or manufacturing of items for commercial distribution	$20,000
B.	License for processing or	$12,000

Unofficial Text (See Printed Volume). Current through date and Register shown on Title Page.

	manufacturing and commercial distribution of radiopharmaceuticals, generators, reagent kits and sources or devices	
C.	License for commercial distribution or redistribution of radiopharmaceuticals, generators, reagent kits and sources or devices	$3,000
D.	Other licenses for processing or manufacturing of items for commercial distribution	$4,000
E.	License for industrial radiography operations performed only in a shielded radiography installation	$3,000
F.	License for industrial radiography performed only at the address indicated on the license, and at temporary job sites	$5,000
G.	License for possession and use of less than 370 TBq (10,000 curies) of radioactive material in sealed sources for irradiation of materials where the source is not removed from the shield [Fee waived if facility holds additional irradiator license category]	$2,000
H.	License for possession and use of less than 370 TBq (10,000 curies) of radioactive material in sealed sources for irradiation of materials where the source is exposed for irradiation purposes. The category also includes underwater irradiators for irradiation of materials in which the source is not exposed for irradiation	$3,000
I.	License for possession and use f at least 370 TBq (10,000 curies) and less than 3.7 PBq (100,000 curies)of radioactive material in sealed sources for irradiation of materials	$5,000
J.	License for possession and use of 3.7 PBq (100,000 curies) or more of radioactive material in sealed sources for irradiation of materials	$12,000

Unofficial Text (See Printed Volume). Current through date and Register shown on Title Page.

K.	License to distribute items containing radioactive materials to persons under a general license	$2,000
L.	License to possess radioactive materials intended for distribution to persons exempt from licensing	$2,500
M.	License of broad scope for research and development that does not authorize commercial distribution	$6,000
N.	Other licenses for research and development that do not authorize commercial distribution	$1,800
O.	License for installation, repair, maintenance leak testing or other service of devices or items containing radioactive material, excluding waste transportation or broker services	$1,800
P.	License for portable gauges, including industrial *Lixiscope* ®	$1,400
Q.	License for portable x−ray fluorescence analyzer calibration flood source, dewpointer or gas chromatograph	$200
R.	All other byproduct, naturally− occurring or accelerator− produced material licenses, except as otherwise noted	$2,000
4.	**Waste Processing**	
A.	Commercial waste treatment facilities, including incineration	$200,000
B.	All other commercial facilities involving waste compaction, repackaging, storage or transfer	$25,000
C.	Waste processing – all other, including decontamination service	$5,000
5.	**Well Logging**	
A.	License for well logging using sealed sources or sub−surface tracer studies	$4,000
B.	License for well logging using sealed sources and sub−surface tracer studies	$5,000

Unofficial Text (See Printed Volume). Current through date and Register shown on Title Page.

6.	**Nuclear Laundry**	
A.	License for commercial collection and laundry of items contaminated with radioactive material	$16,000
7.	**Medical/Veterinary**	
A.	License for human use of byproduct, source, special nuclear or NARM material in sealed sources contained in teletherapy or stereotactic radiosurgery devices, including mobile therapy	$12,000
B.	License of broad scope for human use of byproduct, source, special nuclear or NARM materials used in medical diagnosis, treatment, research and development, excluding teletherapy, or stereotactic radiosurgery devices	$20,000
C.	License for mobile nuclear medicine	$2,500
D.	Medical – all others, including SNM pacemakers and high dose rate remote afterloading devices	$5,000
E.	License for veterinary use of radioactive materials	$2,000
8.	**Academic**	
A.	License for possession and use of byproduct, naturally−occurring or accelerator produced radioactive material for educational use or academic research and development that does not authorize commercial distribution, excluding broad scope or human use licenses, with a combined possession limit of 12 isotopes and 37 GBq (1 curie) total activity	$1,000
9.	**Accelerator**	
A.	License for accelerator production of radioisotopes with commercial distribution	$4,000
B.	Accelerator isotope production – all other [Fee waived if facility holds medical broad scope license with no commercial	$2,000

Unofficial Text (See Printed Volume). Current through date and Register shown on Title Page.

	distribution]	
10.	**Reciprocity**	
A.	Reciprocal recognition of an out−of−state specific license	50% of annual fee of applicable category
11.	**Amendments**	
A.	Request to amend specific license − no license review	$0

Note: Examples include spelling corrections and adding or removing previously authorized users.

B.	Request to amend specific license − license review required	$200

Note: Examples include new isotopes, license termination requiring a site visit and procedural changes.

C.	Request to amend specific license − license review and site visit required	$400

Note: Examples include a facility move, license termination requiring a site visit and new processes.

History: CR 01−108: cr. Register July 2002 No. 559, eff. − see Note at the start of the chapter**; CR 06−021: am. (3) Register October 2006 No. 610, eff. 11−1−06**.

DHS 157.11 General licenses. (1) GENERAL LICENSES − SOURCE MATERIAL. (a) *General license for certain organizations to use and transfer limited amounts of source material.* A general license is issued authorizing commercial and industrial firms, research, educational and medical institutions and state and local government agencies to use and transfer not more than 6.82 kg (15 pounds) of source material at any one time for research, development, educational, commercial or operational purposes. A person authorized to use or transfer source material under this general license may not receive more than a total of 68.2 kg (150 pounds) of source material in any one year.

1. A person who receives, possesses, uses or transfers source material under the general license issued under this paragraph is exempt from the provisions of subchs. III and X to the extent that the receipt, possession, use or transfer is within the terms of the general license, except that this exemption does not apply to any person who is also in possession of source material under a specific license issued under this section.

2. A person who receives, possesses, uses or transfers source material under the general license issued under this paragraph may not administer source material, or radiation from the source material, either externally or internally, to human beings except as authorized by the department in a specific license.

(b) *General license authorizing receipt of title to source material without regard to quantity.* A general license is issued authorizing the receipt of title to source material without regard to quantity. This general license does not authorize any person to receive, possess, use or transfer source material.

Note: A person may take title to source material under a general license. In order to receive, possess, use or transfer source material, he or she must obtain a specific license under s. DHS 157.13.

(c) *General license relating to depleted uranium in industrial products and devices.* 1. A general license is issued to receive, acquire, possess, use or transfer, under the provisions of subds. 2.,3., 4., 5. and 6., depleted uranium contained in industrial products or devices for the purpose of providing a concentrated mass in a small volume of the product or device.

2. The general license issued under this paragraph applies only to industrial products or devices that have been manufactured or initially transferred either under a specific license issued to the manufacturer of the products or devices under s. DHS 157.13 (4) (k) or under a specific license issued to the manufacturer by the NRC or an agreement state which authorizes manufacture of the products or devices for distribution to persons generally licensed by the NRC or the agreement state.

3. A person who receives, acquires, possesses or uses depleted uranium under the general license under this paragraph shall file a “Certificate − Use of Depleted Uranium Under General License” form with the department. The form shall be filed within 30 days after the first receipt or acquisition of depleted uranium and is considered filed when it is received by the department. The general licensee shall furnish on the

Unofficial Text (See Printed Volume). Current through date and Register shown on Title Page.

"Certificate – Use of Depleted Uranium Under General License" all of the following information and any other information required by that form:
a. Name and address of the general licensee.
b. A statement that the general licensee has developed and will maintain procedures designed to establish physical control over the depleted uranium described in this paragraph and designed to prevent transfer of the depleted uranium in any form, including metal scrap, to persons not authorized to receive the depleted uranium.
c. Name and title, address and telephone number of the individual duly authorized to act for and on behalf of the general licensee in supervising the procedures identified in subd. 3. b.
4. The general licensee possessing or using depleted uranium under the general license established under this paragraph shall report in writing to the department any changes in information furnished by that person in the "Certificate − Use of Depleted Uranium Under General License". The report shall be filed within 30 days after the effective date of the change.
5. A person who receives, acquires, possesses or uses depleted uranium under the general license established under this
paragraph shall comply with all of the following:
a. Not introduce the depleted uranium, in any form, into a chemical, physical or metallurgical treatment or process, except a treatment or process for repair or restoration of any plating or other covering of the depleted uranium.
b. Not abandon the depleted uranium.
c. Transfer or dispose of the depleted uranium only under the provisions of s. DHS 157.13 (15). In the case where the transferee receives the depleted uranium under the general license established under this paragraph, the party making the transfer shall furnish the transferee a copy of this subsection and a copy of the "Certificate – Use of Depleted Uranium Under General License". In the case where the transferee receives the depleted uranium under a general license contained in the NRC or agreement state regulations equivalent to this paragraph, the party making the transfer shall furnish the transferee a copy of this subsection and a copy of "Certificate – Use of Depleted Uranium Under General License" accompanied by a note explaining that use of the product or device is regulated by the NRC or an agreement state under requirements substantially the same as those in this subsection.
d. Within 30 days following a transfer, report in writing to the department the name and address of the person receiving the depleted uranium under the transfer.
e. Not export the depleted uranium except under a license issued by the NRC under 10 CFR 110.
6. A person receiving, acquiring, possessing, using or transferring depleted uranium under the general license established under this paragraph is exempt from the requirements of subchs. III and X with respect to the depleted uranium covered by that general license.
Note: The "Certificate − Use of Depleted Uranium Under General License" form may be obtained by writing the Department at: Department of Health and Family Services, Radiation Protection Section, P.O. Box 2659, Madison WI 53701−2659; or by downloading from the Department website at: http://dDHS.wisconsin.gov/dph_beh/ RadioactiveMat/Index.htm. Completed forms may be mailed to the Department at the same address.
(2) GENERAL LICENSES − RADIOACTIVE MATERIAL OTHER THAN SOURCE MATERIAL. (a) *General license relating to certain devices and equipment.* A general license is issued to transfer, receive, acquire, own, possess and use radioactive material incorporated in all the following devices or equipment which have been manufactured, tested and labeled by the manufacturer under a specific license issued to the manufacturer by the NRC for use under 10 CFR 31.3. This general license is exempt from the requirements of subch. III, with the exception of ss. DHS 157.30 (1), 157.32 (1) and (2), and subch. X.
1. 'Static elimination device.' Devices designed for use as static eliminators which contain, as a sealed source or sources, radioactive material consisting of a total of not more than 18.5 MBq (500 microcuries) of polonium−210 per device.
2. 'Ion generating tube.' Devices designed for ionization of air which contain, as a sealed source or sources, radioactive material consisting of not more than 18.5 MBq (500 microcuries) of polonium−210 per device or a total of not more than 1.85 GBq (50 mCi) of hydrogen−3 per device.
(b) *General license relating to certain measuring, gauging or controlling devices.*
1. A general license is issued to commercial and industrial firms and to research, educational and medical institutions, individuals in the conduct of their business and state or local government agencies to own, receive, acquire, possess, use or transfer under the provisions of subds. 1. to 4., radioactive material, excluding special nuclear material, contained in devices designed and manufactured for the purpose of

Unofficial Text (See Printed Volume). Current through date and Register shown on Title Page.

detecting, measuring, gauging or controlling thickness, density, level, interface location, radiation, leakage or qualitative or quantitative chemical composition or for producing light or an ionized atmosphere.

2. The general license issued under this paragraph applies only to radioactive material contained in devices that have been manufactured and labeled under the specifications contained in a specific license issued by the department under s. DHS 157.13 (4) (d) or under the specifications contained in a specific license issued by the NRC, an agreement state or a licensing state, which authorizes distribution of devices to persons generally licensed by the NRC, an agreement state or a licensing state.

Note: Regulations under the Federal Food, Drug and Cosmetic Act authorizing the use of radioactive control devices in food production required certain additional labeling thereon which is found in 21 CFR 179.21.

3. A person who owns, receives, acquires, possesses, uses or transfers radioactive material in a device under the general license under this paragraph shall do all the following:

a. Ensure that all labels affixed to the device at the time of receipt and bearing a statement that removal of the label is prohibited, are maintained on the device and shall comply with all instructions and precautions provided by such labels.

b. Ensure that the device is tested for leakage of radioactive material and proper operation of the "on−off" mechanism and indicator, if any, at no longer than 6−month intervals or at such other intervals as are specified in the label, except for devices containing only ~~krypton,~~ tritium, not more than 3.7 MBq (100 microcuries) of other beta and gamma−emitting material, or 0.37 MBq (10 microcuries) of alpha−emitting material, and devices held in storage in the original shipping container prior to the initial installation. Devices containing only krypton need not be tested for leakage of radioactive material.

c. Ensure that the tests required by this subd. par. b. and other testing, installation, servicing and removal from installation involving the radioactive material, its shielding or containment, are performed under the instructions provided by the labels, or by a person holding an applicable specific license from the department, the NRC, an agreement state or a licensing state to perform such activities.

d. Maintain records showing compliance with the requirements of subd. 3. b. and c. The records shall show the results of tests. The records shall also show the dates of performance of tests, and the names of persons performing, testing, installation, servicing and removal from installation of the radioactive material, its shielding or containment. Records of tests for leakage of radioactive material required by subd. 3. b. shall be maintained for 3 years or until the sealed source is transferred or disposed of. Records of tests of the "on−off" mechanism and indicator required by subd. 3. b. shall be maintained for 3 years or until the sealed source is transferred or disposed of. Records that are required by subd. 3. c. shall be maintained for a period of 3 years from the date of the recorded event or until the device is transferred or disposed of.

e. Upon the occurrence of a failure of or damage to or any indication of a possible failure of or damage to, the shielding of the radioactive material or the "on−off" mechanism or indicator, or upon the detection of 185 Bq (0.005 microcurie) or more removable radioactive material, shall immediately suspend operation of the device until it has been repaired by the manufacturer or other person holding an applicable specific license from the department, the NRC, an agreement state or a licensing state to repair such devices, or disposed of by transfer to a person authorized by an applicable specific license to receive the radioactive material contained in the device. The licensee shall file a written report containing a brief description with the department within 30 days of the event.

f. Not abandon the device containing radioactive material .

g. Except as provided in subd. ~~3. h.~~pars. h. and j., transfer or dispose of the device containing radioactive material only by transfer to a specific licensee of the department, the NRC, an agreement state or a licensing state whose specific license authorizes that person to receive the device and within 30 calendar days after transfer of a device to a specific licensee or export of the device shall furnish to the department a written report containing identification of the device by manufacturer's or initial transferer's name ~~and~~, model and serial number ~~and~~, the name ~~and~~, address and license number of the person receiving the device, and the date of the transfer. ~~No report is required if the device is transferred to the specific licensee to obtain a replacement device~~.

h. Transfer the device to another general licensee only where the device is held in storage in the original shipping container at its intended location of use prior to initial use by a general licensee, or where the device remains in use at a particular location. In the latter case, the transferor shall give the transferee a copy of sub. (2) (b) and any safety documents identified in the label on the device and within 30 calendar days of the transfer. The licensee shall report to the department the manufacturer's name ~~and~~, model and serial number of device transferred, the name and address of the transferee, and the name, phone number

Unofficial Text (See Printed Volume). Current through date and Register shown on Title Page.

and position of an individual who may constitute a point of contact between the department and the transferee.

i. Comply with the provisions of s. DHS 157.32 (1) and (2) for reporting radiation incidents, theft or loss of licensed material, but is exempt from the other requirements of subchs. III and X.

j. Not export the device containing byproduct material except as allowed under 10 CFR Part 110.

k.Respond to written requests from the department to provide information relating to the general license within 30 calendar days of the date of the request,or other time specified in the request. If the general licensee cannot provide the requested information within the alotted time, it shall, within the same time period, request in writing a longer time period and provide written justification why it cannot comply.

L. Appoint an individual responsible for having knowledge of the appropriate requirements of this chapter and the authority for taking required actions to comply with these requirements. The general licensee, through this individual, shall ensure the day-to-day compliance with the appropriate requirements of this chapter. This appointment does not relieve the general licensee of any of its responsibility under this chapter.

m. May not hold devices that are not in use for longer than 2 years. If devices with shutters are not being used, the shutter shall be locked in the closed position. The testing required under this subdivision 3.b. need not be performed during the period of storage only. When devices are put back into service or transferred to another person, and have not been tested within the required time interval, they shall be tested for leakage before use or transfer and the shutter tested before use. Devices kept in standby for future use are excluded from the two-year time limit if the general licensee performs quarterly physical inventories of these devices while they are in standby.

4. The general license under this paragraph does not authorize the manufacture or import of devices containing radioactive material.

5. The general license under this paragraph is exempt from the requirements of subchs. III and X, with the exception of ss. DHS 157.30 (1), 157.32 (1) and (2).

(c) *General license relating to luminous safety devices for aircraft.* A general license is issued to own, receive, acquire, possess and use tritium or promethium−147 contained in luminous safety devices for use in aircraft, provided that each device contains not more than 370 GBq (10 curies) of tritium or 11.1 GBq (300 millicuries) of promethium−147, and that each device has been manufactured, assembled or imported under a specific license issued by the NRC, or manufactured or assembled under the specifications contained in a specific license issued by the department or any agreement state to the manufacturer or assembler of such device under licensing requirements equivalent to those in 10 CFR 32.53.

1. A person who owns, receives, acquires, possesses or uses luminous safety devices under the general license under this paragraph is exempt from the requirements of subchs. III and X except that they shall comply with the provisions of s. DHS 157.32 (1) and (2).

2. The general license under this paragraph does not authorize the manufacture, assembly or repair of luminous safety devices containing tritium or promethium−147.

3. The general license under this paragraph does not authorize the ownership, receipt, acquisition, possession or use of promethium− 147 contained in instrument dials.

4. The general license under this paragraph is exempt from the requirements of subchs. III and X, with the exception of ss. DHS 157.30 (1), 157.32 (1) and (2).

(d) *General license relating to ownership of radioactive material.* A general license is issued to own radioactive material without regard to quantity. Notwithstanding any other provisions of this section, this general license does not authorize the manufacture, production, transfer, receipt, possession or use of radioactive material.

Note: A person may own radioactive material without the material being in their immediate possession. This general license does not allow the person to manufacture, produce devices containing material, transfer, receive, posses or use the material. A specific license is required for these activities.

(e) *General license relating to calibration and reference sources.* A general license is issued to own, receive, acquire, possess, use and transfer americium−241, plutonium or radium−226 in the form of calibration or reference sources, under the provisions of subds. 1. to 5., to any person who holds a specific license issued by the department or the NRC which authorizes the person to receive, possess, use and transfer radioactive material.

Note: For Americium−241 and plutonium, a specific license issued by the NRC is also required for any person to receive, possess or use and transfer special nuclear material.

1. The general license under this paragraph applies only to calibration or reference sources that have been manufactured

Unofficial Text (See Printed Volume). Current through date and Register shown on Title Page.

under the specifications contained in a specific license issued to the manufacturer or importer of the sources by the NRC under 10 CFR 32.57 or 10 CFR 70.39 or that have been manufactured under the specifications contained in a specific license issued to the manufacturer by the department, an agreement state or licensing state under licensing requirements equivalent to those contained in 10 CFR 32.57 or 10 CFR 70.39.
2. The general license under this paragraph is subject to the requirements of subchs. III and X.
3. A person who owns, receives, acquires, possesses, uses or transfers one or more calibration or reference sources under the general licenses provided under this paragraph may not receive, possess, use or transfer the source unless the source or the storage container bears a label which includes one of the following statements, as appropriate, or a substantially similar statement which contains the information called for in one of the following statements, as appropriate:
a. The receipt, possession, use and transfer of this source, Model ____, Serial No. _____, is subject to a general license and the regulations of the NRC or of a state with which the NRC has entered into an agreement for the exercise of regulatory authority. Do not remove this label.

CAUTION − RADIOACTIVE MATERIAL
THIS SOURCE CONTAINS (AMERICIUM−241).
(PLUTONIUM) DO NOT TOUCH RADIOACTIVE
PORTION OF THIS SOURCE.

_____
Name of manufacturer or importer

Note: The label is to show only the name of the appropriate material.

b. The receipt, possession, use and transfer of this source, Model _____, Serial No. ____, is subject to a general license and the regulations of a licensing state. Do not remove this label.

CAUTION − RADIOACTIVE MATERIAL
THIS SOURCE CONTAINS RADIUM−226.
DO NOT TOUCH RADIOACTIVE PORTION OF THIS
SOURCE.

_____
Name of manufacturer or importer

4. A person who owns, receives, acquires, possesses, uses or transfers one or more calibration sources under the general license under this paragraph shall do all the following:
a. Not transfer, abandon or dispose of the source except by transfer to a person authorized by a license from the department, the NRC, an agreement state or a licensing state to receive the source.
b. Store the source, except when the source is being used, in a closed container adequately designed and constructed to contain americium−241, plutonium or radium−226 that might otherwise escape during storage.
c. Not use the source for any purpose other than the calibration of radiation detectors or the standardization of other sources.
d. Not possess at any one time, at any one location of storage or use, more than 185 kBq (5 microcuries) of americium−241, plutonium or radium−226.
5. The general license under this paragraph does not authorize the manufacture of calibration or reference sources containing americium−241, plutonium or radium−226.
(f) *General license for use of radioactive material for certain in vitro clinical or laboratory testing.*
1. A general license is issued to any physician, veterinarian, clinical laboratory or hospital to receive, acquire, possess, transfer or use, for any of the following stated tests, under the provisions of subds. 2. to 6., the following radioactive materials in prepackaged units for use as in vitro clinical or laboratory tests not involving internal or external administration of radioactive material, or the radiation therefrom, to human beings or animals:
a. Carbon−14, in units not exceeding 370 kBq (10 microcuries) each.
b. Cobalt−57, in units not exceeding 370 kBq (10 microcuries) each.
c. Hydrogen−3, in units not exceeding 1.85 MBq (50 microcuries) each.
d. Iodine−125, in units not exceeding 370 kBq (10 microcuries) each.
e. Mock Iodine−125 reference or calibration sources, in units not exceeding 1.85 kBq (0.05 microcurie) of iodine−129 and 185 Bq (0.005 microcurie) of americium−241 each.
f. Iodine−131, in units not exceeding 370 kBq (10 microcuries) each.
g. Iron−59, in units not exceeding 740 kBq (20 microcuries) each.

Unofficial Text (See Printed Volume). Current through date and Register shown on Title Page.

h. Selenium−75, in units not exceeding 370 kBq (10 microcuries) each.

Note: 21 USC 301 also governs the availability and use of any specific diagnostic drugs in interstate commerce.

2. No person may receive, acquire, possess, use or transfer radioactive material under the general license established under this paragraph until the person has filed a "Certificate − In Vitro Testing with Radioactive Material Under General License" form with the department and received from the department a validated copy of the form with certification number assigned. A physician, veterinarian, clinical laboratory or hospital shall furnish on the "Certificate – In Vitro Testing with Radioactive Material Under General License" all the following information and such other information as may be required by that form:

a. Name and address of the physician, veterinarian, clinical laboratory or hospital.

b. The location of use.

c. A statement that the physician, veterinarian, clinical laboratory or hospital has appropriate radiation measuring instruments to carry out in vitro clinical or laboratory tests with radioactive material as authorized by the general license under this paragraph and that the tests will be performed only by personnel competent in the use of such instruments and in the handling of the radioactive material.

Note: The "Certificate − In Vitro Testing with Radioactive Material Under General License" form may be obtained by writing the Department at: Department of Health and Family Services, Radiation Protection Section, P.O. Box 2659, Madison WI 53701−2659; or by downloading from the Department website at: http://dDHS.wisconsin. gov/dph_beh/RadioactiveMat/Index.htm.

3. A person who receives, acquires, possesses or uses radioactive material under the general license under this paragraph shall comply with all the following:

a. The general licensee may not possess at any one time, under the general license under this paragraph, at any one location for storage or use, a total amount of iodine−125, iodine−131, selenium− 75, iron−59, or cobalt−57 in excess of 7.4 MBq (200 microcuries).

b. The general licensee shall store the radioactive material, until used, in the original shipping container or in a container providing equivalent radiation protection.

c. The general licensee shall use the radioactive material only for the uses authorized by subd. 1.

d. The general licensee may not transfer the radioactive material to a person who is not authorized to receive it under a license issued by the department, the NRC, any agreement state or a licensing state, nor transfer the radioactive material in any manner other than in the unopened, labeled shipping container as received from the supplier.

e. The general licensee shall dispose of the Mock Iodine−125 reference or calibration sources described in subd. 1. e. as required by s. DHS 157.30 (1).

4. The general licensee may not receive, acquire, possess, or use radioactive material under subd. 1. except in prepackaged units which are labeled under the provisions of an applicable specific license issued under s. DHS 157.13 (4) (g) or under the provisions of a specific license issued by the NRC, any agreement state or a licensing state which authorizes the manufacture and distribution of iodine−125, iodine−131, carbon−14, hydrogen−3, iron−59, selenium−75, cobalt−57 or Mock Iodine−125 to persons generally licensed under subd. 1. or its equivalent and one of the following statements or a substantially similar statement that contains the information called for in one of the following statements, appears on a label affixed to each prepackaged unit or appears in a leaflet or brochure which accompanies the package:

a. This radioactive material shall be received, acquired, possessed and used only by physicians, veterinarians, clinical laboratories or hospitals and only for in vitro clinical or laboratory tests not involving internal or external administration of the material, or the radiation therefrom, to human beings or animals. Its receipt, acquisition, possession, use and transfer are subject to the regulations and a general license of the NRC or of a state with which the commission has entered into an agreement for the exercise of regulatory authority.

_____
Name of manufacturer

b. This radioactive material shall be received, acquired, possessed and used only by physicians, veterinarians, clinical laboratories or hospitals and only for in vitro clinical or laboratory tests not involving internal or external administration of the material, or the radiation therefrom, to human beings or animals. Its receipt, acquisition, possession, use and transfer are subject to the regulations and a general license of a licensing state.

_____
Name of manufacturer

5. The physician, veterinarian, clinical laboratory or hospital possessing or using radioactive material under the general license under this paragraph shall report in writing to the department any changes in the

Unofficial Text (See Printed Volume). Current through date and Register shown on Title Page.

information furnished by that person in the "Certificate − In Vitro Testing with Radioactive Material Under General License". The report shall be furnished to the department within 30 days after the effective date of such change.

6. Any person using radioactive material under the general license under this paragraph is exempt from the requirements of subchs. III and X with respect to radioactive material covered by that general license, except that such persons using the Mock Iodine−125 described in subd. 1. e. shall comply with the provisions of ss. DHS 157.30 (1) and 157.32 (1) and (2).

(g) *General license relating to ice detection devices.* A general license is issued to own, receive, acquire, possess, use and transfer strontium−90 contained in ice detection devices, provided each device contains not more than 1.85 MBq (50 microcuries) of strontium−90 and each device has been manufactured or imported under a specific license issued by the NRC or each device has been manufactured under the specifications contained in a specific license issued by the department or an agreement state to the manufacturer of the device under licensing requirements equivalent to those in 10 CFR 32.61.

1. A person who owns, receives, acquires, possesses, uses or transfers strontium−90 contained in ice detection devices under the general license under this paragraph shall do all the following:

a. Upon occurrence of visually observable damage, such as a bend or crack or discoloration from overheating to the device, discontinue use of the device until it has been inspected, tested for leakage and repaired by a person holding a specific license from the NRC or an agreement state to manufacture or service the devices; or shall dispose of the device under the provisions of s. DHS 157.30 (1).

b. Assure that all labels affixed to the device at the time of receipt and which bear a statement that prohibits removal of the labels, are maintained on the device.

2. A person who owns, receives, acquires, possesses, uses or transfers strontium−90 contained in ice detection devices under the general license under this paragraph are exempt from the requirements of subchs. III and X except that the person shall comply with the provisions of ss. DHS 157.30 (1) and 157.32 (1) and (2).

3. The general license in this paragraph does not authorize the manufacture, assembly, disassembly or repair of strontium−90 in ice detection devices.

4. The general license in this paragraph is exempt from the requirements of subchs. III and X with the exception of ss. DHS 157.30 (1), 157.32 (1) and (2).

(h) *General license relating to certain items and self-luminous products containing radium-226.*

1. A general license is issued to own, receive, acquire, possess, use or transfer radium-226 contained in the following products:

a. Antiquities originally intended for use by the general public that were manufactured in the 19th and 20th centuries, such as radium emanator jars, revigators, radium water jars, radon generators, refrigerator cards, radium bath salts and healing pads.

b. Intact timepieces containing greater than 37 kBq (1 microcurie) of radium-226, nonintact timepieces, and timepiece dials and hands no longer installed in timepieces.

c. Self-luminous items installed in air, marine or land vehicles.

d. All other luminous products, provided that no more than 100 items are used or stored at the same location at any one time.

e. Small radium sources, such as discrete survey instrument check sources, sources contained in radiation measuring instruments, sources used in educational demonstrations, electron tubes, lightning rods, ionization sources or static eliminators, containing no more than 37 kBq (1 microcurie) of radium 226.

2. The general license in this paragraph is exempt from the requirements of subchs. III and X with the exception of ss. DHS 157.30 (1), 157.32 (1) and (2). This exemption does not apply to any person specifically licensed under this chapter.

3. A person who owns, receives, acquires, acquires, possesses,uses or transfers radium-226 under the general license in sub. 1. shall do all the following:

a. Report to the department under DHS 157.32 any stolen, lost or missing radioactive material.

b. Not abandon the product containing radium-226. The product , and any radioactive material from the product, shall be disposed of according to the requirements of DHS 157.30 (8), by transfer to a person authorized under a specific license to receive the radium-226, or as approved by the department .

c. Not export products containing radium-226 except under 10 CFR 110.

d. Respond to written requests from the department to provide information relating to the general license within 30 calendar days of the date of the request,or other time specified in the request. If the general

Unofficial Text (See Printed Volume). Current through date and Register shown on Title Page.

licensee cannot provide the requested information within the alotted time, it shall, within the same time period, request in writing a longer time period and provide written justification why it cannot comply.
4. The general license in subd. 1. does not authorize the manufacture, assembly, disassembly, repair, or import of products containing radium-226, except that timepieces may be disassembled and repaired.

History: CR 01−108: cr. Register July 2002 No. 559, eff. − see Note at the start of the chapter; corrections in (1) (c) 3. c. and (2) (g) 1. a. made under s. 13.93 (2m) (b) 7., Stats., Register July 2002 No. 559; **CR 06−021: am. (2) (b) 5., (c) 4., (e) 2., (f) 3. e. and 6., (g) 1. a., 2. and 4. Register October 2006 No. 610, eff. 11−1−06**.

DHS 157.12 Registration of generally licensed devices. (1) REGISTRATION REQUIREMENT. (a) No person may possess, receive, use, own or transfer a device purchased under a general license that contains at least 370 MBq (10 millicuries) of cesium−137, 3.7 MBq (0.1 millicurie) of strontium−90, 37 MBq (1 millicurie) of cobalt−60, 3.7 MBq (0.1 millicurie) of radium-226 or 37 MBq (1 millicurie) of americium− 241 or any other transuranic unless that person registers annually with the department and pays a fee as prescribed in sub.(6). Each address for a location of use as described in sub.. (3) (d) represents a separate general licensee and requires a separate registration.
(b) A person in possession of devices that meet the criteria for registration under par. (a) shall notify the department of bankruptcy as specified in s. DHS 157.13 (10) (e) and (f).
(2) EXEMPTIONS. A person who possesses, receives, uses, owns or transfers a device purchased under a general license that is included under a new or existing specific license or that contains isotopes different from those listed in sub. (1) is exempt from the requirements of this section.
(3) INFORMATION REQUIREMENTS. A general licensee shall furnish the following information and any other information specifically requested by the department:
(a) Name and mailing address of the general licensee.
(b) Information about each device: the manufacturer, model number, serial number, radioisotope and activity as indicated on the label.
(c) Name and telephone number of the individual designated by management as a representative of the general licensee.
(d) Address at which the device is used or stored. For a portable device, the address of the primary place of storage.
(e) Certification by signature from the individual representing the general licensee that the information concerning the device or devices has been verified through a physical inventory and check of label information.
(f) Certification by signature from the individual designated by management to represent the general licensee that the individual is aware of the requirements of the general license.
(4) CHANGE OF ADDRESS. A general licensee shall report, in writing, an address change to the department within 30 calendar days after moving the devices. In the case of portable devices, a general licensee shall report the device's primary storage location.
(6) FEES. (a) A general licensee shall pay an annual registration fee of $100 per site and $50 per device specified in sub. (1). The department may not assess an additional fee for recording changes in registration information.
(b) The annual registration fee for the next year shall be paid by December 31 of the prior year of registration. The department shall issue a notice of registration following receipt of the registration fee. If the annual registration fee for the next year is not received by the department by December 31 of the prior year of registration, a licensee shall pay a penalty fee of $25, in addition to the registration fee and regardless of the number of devices, before the department will issue a new notice of registration.
(7) INSPECTION BY MAIL. (a) A general licensee shall complete an inspection by mail form, provided by the department with each annual registration renewal, and return it to the department by December 31 of that year. The form shall include information deemed necessary by the department.
(b) No additional fee may be required for this form.
(c) A general licensee who fails to complete this form may be subject to a site inspection.

History: CR 01−108: cr. Register July 2002 No. 559, eff. − see Note at the start of the chapter; **CR 06−021: am. (3) (intro.), r. (5) Register October 2006 No. 610, eff. 11−1−06**.

DHS 157.13 Specific licenses. (1) FILING APPLICATION FOR SPECIFIC LICENSES. (a) An application for a specific license shall be filed on a form prescribed by the department.

Unofficial Text (See Printed Volume). Current through date and Register shown on Title Page.

Note: A specific license application form may be obtained by writing the Department, including a description of the proposed activity to be licensed. The Department's address is: Department of Health and Family Services, Radiation Protection Section, P.O. Box 2659, Madison WI 53701−2659; or by downloading from the Department's website at: http://dDHS.wisconsin.gov/dph_beh/RadioactiveMat/ Index.htm.

(b) The department may at any time after the filing of the original application, and before the expiration of the license, require further statements to enable the department to determine whether the application should be granted or denied or whether a license should be modified, suspended or revoked.

(c) The applicant, licensee or a person authorized to act on behalf of the applicant or licensee shall sign the application.

(d) A license application may include a request for a license authorizing one or more activities.

(e) In the application, the applicant may incorporate by reference information contained in previous applications, statements or reports filed with the department provided such references are clear and specific.

(f) The department shall make applications and documents submitted to the department available for public inspection under ss. 19.32 to 19.39, Stats.

(g) Each application to possess radioactive material in unsealed form, on a foil or plated source, or sealed in glass in excess of the quantities in Appendix P, "Quantities of Radioactive Materials Requiring Consideration of the Need for an Emergency Plan for Responding to a Release", shall contain one of the following:

1. An evaluation showing that the projected dose to a person offsite due to a release of radioactive material would not exceed 0.01 Sievert (1 rem) total effective dose equivalent or 0.05 Sievert (5 rem) to the thyroid.

2. An emergency plan, reviewed and commented on by offsite response organizations expected to respond in the event of an accident, that contains the information described in Appendix Q for responding to any event in which radioactive material could be released from the site.

(h) Each application to use radioactive material in the form of a sealed source or in a device that contains a sealed source shall contain either of the following:

1. Information that identifies the source or device by manufacturer and model number as registered with the NRC or an agreement state.

2. The information identified in 10 CFR 32.210(c).

(i) Each application for a specific license, other than a renewal, shall contain information describing how facility design and procedures for operation will minimize, to the extent practicable, contamination of the facility and the environment, facilitate eventual decommissioning and minimize, to the extent practicable, the generation of radioactive waste.

~~(j) Each application to produce Positron Emission Tomography (PET) radioactive drugs for noncommercial transfer to licensees in a consortium authorized for medical use under subchapter VI or equivalent NRC or agreement state requirements shall include all the following:~~ Note to NRC: Missing from proposed rule .

1. A request for authorization for the production of PET radionuclides or evidence of an existing license issued by the department, NRC or an agreement state under this chapter or equivalent regulations for a PET radionuclide production facility within its consortium from which it receives PET radionuclides..

2. Evidence that the applicant is qualified to produce radioactive drugs for medical use by meeting one of the criteria in s. DHS 157.13 (4) (i).

3. Identification of individual(s) authorized to prepare the PET radioactive drugs if the applicant is a pharmacy, and documentation that each individual meets the requirements of an authorized nuclear pharmacist as specified in s. DHS 157.68.

4. Information identified in s. DHS 157.13 (4) (i) 3. on the PET drugs to be noncommercially transferred to members of a consortium.

(2) GENERAL REQUIREMENTS FOR THE ISSUANCE OF SPECIFIC LICENSES. The department shall approve a license application within 180 working days of filing of a complete application if the department determines that all the following apply:

(a) The applicant is qualified by reason of training and experience to use the material in question for the purpose requested under the requirements of this chapter in a manner that minimizes danger to public health and safety or property.

Unofficial Text (See Printed Volume). Current through date and Register shown on Title Page.

(b) The applicant's proposed equipment, facilities and procedures are adequate to minimize danger to public health and safety or property.
(c) 1. In the case of an application for a license to receive and possess radioactive material for commercial waste disposal by land burial, or for the conduct of any other activity which the department determines will significantly affect the quality of the environment, the department, before commencement of construction of the plant or facility in which the activity will be conducted, has concluded, after weighing the environmental, economic, technical and other benefits against environmental costs and considering available alternatives, that the action called for is the issuance of the proposed license, with any appropriate conditions to protect environmental values.
2. Commencement of construction prior to the department's conclusion in subd. 1. shall be grounds for denial of a license to receive and possess radioactive material in such plant or facility. As used in this paragraph the term "commencement of construction" means any clearing of land, excavation, or other substantial action that would adversely affect the environment of a site. The term does not mean site exploration, necessary roads for site exploration, borings to determine foundation conditions, or other pre−construction monitoring or testing to establish background information related to the suitability of the site or the protection of environmental values.
(d) The applicant satisfies any applicable requirements in subs. (3), (4) and (6), s. DHS 157.15 and subchs. IV, V and VI.
(e) The applicant pays all applicable fees as specified in s. DHS 157.10.
(f) In the case of an application for a license to possess and use an x−ray fluorescence analyzer (XRF) for the detection of lead in paint or portable gauges using sealed sources, the applicant shall verify that the operator training requirements of Appendix S are met prior to the operator using the device.
(3) SPECIAL REQUIREMENTS FOR SPECIFIC LICENSES OF BROAD SCOPE. (a) This subsection prescribes requirements for the issuance of specific licenses of broad scope for radioactive material and certain regulations governing holders of the licenses.
(b) The different types of broad scope licenses are as follows:
1. A "Type A specific license of broad scope" is a specific license authorizing receipt, acquisition, ownership, possession, use and transfer of any chemical or physical form of the radioactive material specified in the license, but not exceeding quantities specified in the license, for any authorized purpose. The quantities specified are usually in the multicurie range, but may be limited based on types of radioactive materials, proposed use and the training and experience of users.
2. A "Type B specific license of broad scope" is a specific license authorizing receipt, acquisition, ownership, possession, use and transfer of any chemical or physical form of radioactive material specified in Appendix C, for any authorized purpose. The possession limit for a Type B license of broad scope, if only one radionuclide is possessed under the license, is the quantity specified for that radionuclide in Appendix C, Column I. If 2 or more radionuclides are possessed under the license, the possession limit for each is determined as follows: For each radionuclide, determine the ratio of the quantity possessed to the applicable quantity specified in Appendix C, Column I, for that radionuclide. The sum of the ratios for all radionuclides possessed under the license may not exceed unity.
3. A "Type C specific license of broad scope" is a specific license authorizing receipt, acquisition, ownership, possession, use and transfer of any chemical or physical form of radioactive material specified in Appendix C, for any authorized purpose. The possession limit for a Type C license of broad scope, if only one radionuclide is possessed thereunder, is the quantity specified for that radionuclide in Appendix C, Column II. If 2 or moreradionuclides are possessed thereunder, the possession limit is determined for each as follows: For each radionuclide, determine the ratio of the quantity possessed to the applicable quantity specified in Appendix C, Column II, for that radionuclide. The sum of the ratios for all radionuclides possessed under the license may not exceed unity.
(c) The department shall approve an application for a Type A specific license of broad scope if all the following occurs:
1. The applicant satisfies the general requirements specified in sub. (2).
2. The applicant has engaged in a reasonable number of activities involving the use of radioactive material.
3. The applicant has established administrative controls and provisions relating to organization and management, procedures, record keeping, material control, accounting and management review that are necessary to assure safe operations, including all of the following:

Unofficial Text (See Printed Volume). Current through date and Register shown on Title Page.

a. The establishment of a radiation safety committee composed of such persons as a radiation safety officer, a representative of management and persons trained and experienced in the safe use of radioactive material.
b. The appointment of a radiation safety officer who is qualified by training and experience in radiation protection and who is available for advice and assistance on radiation safety matters.
c. The establishment of appropriate administrative procedures to assure control of procurement and use of radioactive material; completion of safety evaluations of proposed uses of radioactive material which take into consideration such matters as the adequacy of facilities and equipment, training and experience of the user and the operating or handling procedures; and review, approval and recording by the radiation safety committee of safety evaluations of proposed uses prior to use of the radioactive material.
(d) The department shall approve an application for a Type B specific license of broad scope if all the following occurs:
1. The applicant satisfies the general requirements specified in sub. (2).
2. The applicant has established administrative controls and provisions relating to organization and management, procedures, record keeping, material control, accounting and management review that are necessary to assure safe operations, including all the following:
a. The appointment of a radiation safety officer who is qualified by training and experience in radiation protection and who is available for advice and assistance on radiation safety matters.
b. The establishment of appropriate administrative procedures to assure control of procurement and use of radioactive
material; completion of safety evaluations of proposed uses of radioactive material which take into consideration such matters as the adequacy of facilities and equipment, training and experience of the user and the operating or handling procedures; and review, approval and recording by the radiation safety officer of safety evaluations of proposed uses prior to use of the radioactive material.
(e) The department shall approve an application for a Type C specific license of broad scope if all the following occurs:
1. The applicant satisfies the general requirements specified in sub. (2).
2. The applicant submits a statement that radioactive material will be used only by or under the direct supervision of individuals who have received all the following:
a. A college degree at the bachelor level in the physical or biological sciences or in engineering or equivalent training and experience.
b. At least 40 hours of training and experience in the safe handling of radioactive material and in the characteristics of ionizing radiation, units of radiation dose and quantities, radiation detection instrumentation and biological hazards of exposure to radiation appropriate to the type and forms of radioactive material to be used.
3. The applicant has established administrative controls and provisions relating to procurement of radioactive material, procedures, record keeping, material control, accounting and management review necessary to assure safe operations.
(f) A specific license of broad scope is subject to all of the following conditions:
1. Unless specifically authorized, a person licensed under sub. (3) may not do any of the following:
a. Conduct tracer studies in the environment involving direct release of radioactive material.
b. Receive, acquire, own, possess, use or transfer devices containing 3.7 PBq (100,000 curies) or more of radioactive material in sealed sources used for irradiation of materials.
c. Conduct activities for which a specific license issued by the department under sub. (4) or subch. VI is required.
d. Add or cause the addition of radioactive material to any food, beverage, cosmetic, drug or other product designed for ingestion or inhalation by, or application to, a human being.
2. A Type A specific license of broad scope issued under this section shall be subject to the condition that radioactive material possessed under the license may only be used by or under the direct supervision of individuals approved by the licensee's radiation safety committee.
3. A Type B specific license of broad scope issued under this section shall be subject to the condition that radioactive material possessed under the license may only be used by or under the direct supervision of individuals approved by the licensee's radiation safety officer.
4. A Type C specific license of broad scope issued under this section shall be subject to the condition that radioactive material possessed under the license may only be used by or under the direct supervision of individuals who satisfy the requirements of par. (e).

Unofficial Text (See Printed Volume). Current through date and Register shown on Title Page.

(4) SPECIAL REQUIREMENTS FOR A SPECIFIC LICENSE TO MANUFACTURE, ASSEMBLE, REPAIR OR DISTRIBUTE COMMODITIES, PRODUCTS OR DEVICES WHICH CONTAIN RADIOACTIVE MATERIAL.

(a) *Licensing the introduction of radioactive material into products in exempt concentrations.*

1. In addition to the requirements set forth in sub. (2), a specific license authorizing the introduction of radioactive material into a product or material owned by or in the possession of the licensee or another to be transferred to a person exempt under s. DHS 157.09 (2) (a) shall be issued only under all the following conditions:

a. The applicant submits a description of the product or material into which the radioactive material will be introduced, intended use of the radioactive material and the product or material into which it is introduced, method of introduction, initial concentration of the radioactive material in the product or material, control methods to assure that no more than the specified concentration is introduced into the product or material, estimated time interval between introduction and transfer of the product or material and estimated concentration of the radioactive material in the product or material at the time of transfer.

b. The applicant provides reasonable assurance that the concentrations of radioactive material at the time of transfer will not exceed the concentrations in Appendix A of this chapter, that reconcentration of the radioactive material in concentrations exceeding those in Appendix A is not likely, that use of lower concentrations is not feasible and that the product or material is not likely to be incorporated in any food, beverage, cosmetic, drug or other commodity or product designed for ingestion or inhalation by or application to a human being.

2. A person licensed under this paragraph shall file an annual report with the department which shall identify the type and quantity of each product or material into which radioactive material has been introduced during the reporting period; name and address of the person who owned or possessed the product or material, into which radioactive material has been introduced, at the time of introduction; the type and quantity of radionuclide introduced into each such product or material; and the initial concentrations of the radionuclide in the product or material at time of transfer of the radioactive material by the licensee. If no transfers of radioactive material have been made under par. (a) during the reporting period, the report shall so indicate. The report shall cover the previous 12−month period ending June 30 and shall be filed within 30 days thereafter.

Note: Authority to transfer possession or control by the manufacturer, processor, or producer of any equipment, device, commodity, or other product containing byproduct material whose subsequent possession, use, transfer, and disposal by all other persons are exempted from regulatory requirements may be obtained only from the Nuclear Regulatory Commission, Washington, D.C. 20555.

(b) *Licensing the commercial distribution of radioactive material in exempt quantities.* 1. The department shall approve an application for a specific license to distribute NARMs to persons exempted from this chapter under s. DHS 157.09 (2) (b) only under all the following conditions:

a. The radioactive material is not contained in any food, beverage, cosmetic, drug or other commodity designed for ingestion, inhalation by or application to a human being.

b. The radioactive material is in the form of processed chemical elements, compounds or mixtures, tissue samples, bioassay samples, counting standards, plated or encapsulated sources or similar substances, identified as radioactive and to be used for its radioactive properties, but is not incorporated into any manufactured or assembled commodity, product, or device intended for commercial distribution.

c. The applicant submits copies of prototype labels and brochures and the department approves such labels and brochures.

d. Out of state manufacturers of the product hold a license issued by a licensing or agreement state.

2. The license issued under this paragraph is subject to all the following conditions:

a. No more than 10 exempt quantities may be sold or transferred in any single transaction. However, an exempt quantity may be composed of fractional parts of one or more of the exempt quantity provided the sum of the fractions do not exceed unity.

b. Each exempt quantity shall be separately and individually packaged. No more than 10 packaged exempt quantities may be contained in any outer package for transfer to persons exempt under s. DHS 157.09 (2) (b). The outer package shall be such that the dose rate at the external surface of the package does not exceed 5 μSv (0.5 millirem) per hour.

Unofficial Text (See Printed Volume). Current through date and Register shown on Title Page.

c. The immediate container of each quantity or separately packaged fractional quantity of radioactive material shall bear a durable, legible label that identifies the radionuclide and the quantity of radioactivity and bears the words "Radioactive Material".
d. In addition to the labeling information required by this subd. 2. c., the label affixed to the immediate container or an
accompanying brochure shall state that the contents are exempt from licensing or agreement state requirements; the words "Radioactive Material − Not for Human Use − Introduction into Foods, Beverages, Cosmetics, Drugs or Medicinals or into Products Manufactured for Commercial Distribution is Prohibited−− Exempt Quantities Should Not Be Combined"; and appropriate additional radiation safety precautions and instructions relating to the handling, use, storage and disposal of the radioactive material.
3. A person licensed under this paragraph shall maintain records identifying, by name and address, each person to whom radioactive material is transferred for use under s. DHS 157.09 (2) (b) or the equivalent regulations of a licensing or agreement state and stating the kinds and quantities of radioactive material transferred. An annual summary report stating the total quantity of each radionuclide transferred under the specific license shall be filed with the department. Each report shall cover the year ending June 30 and shall be filed within 30 days thereafter. If no transfers of radioactive material have been made under this paragraph during the reporting period, the report shall so indicate.
(c) *Licensing the incorporation of NARM into gas and aerosol detectors.* The department shall approve an application for a specific license authorizing the incorporation of NARM into gas and aerosol detectors to be distributed to persons exempt under s. DHS 157.09 (2) (e) if the application satisfies requirements equivalent to those contained in 10 CFR 32.26. The maximum quantity of radium−226 in each device may not exceed 3.7 kBq (0.1 microcurie).
(d) *Licensing the manufacture and initial distribution of devices to persons generally licensed under s. DHS 157.11 (2) (b).*
1. The department shall approve an application for a specific license to manufacture or initially distribute devices containing radioactive material, excluding special nuclear material, to persons generally licensed under s. DHS 157.11 (2) (b) or equivalent regulations of the NRC, another agreement state or a licensing state only under all the following conditions:
a. The applicant satisfies the general requirements of sub. (2).
b. The applicant submits sufficient information relating to the design, manufacture, prototype testing, quality control, labels, proposed uses, installation, servicing, leak testing, operating and safety instructions and potential hazards of the device to provide reasonable assurance that the device may be safely operated by persons not having training in radiological protection.
c. The applicant submits sufficient information, as specified in subd. 1. b., to provide reasonable assurance that under ordinary conditions of handling, storage and use of the device, the radioactive material contained in the device will not be released or inadvertently removed from the device, and it is unlikely that any person will receive in any period of one year a dose in excess of 10% of the annual limits specified in s. DHS 157.22 (1) (a).
d. The applicant submits sufficient information, as specified in subd. 1. b., to provide reasonable assurance that under accident conditions such as fire and explosion associated with handling, storage, and use of the device, it is unlikely that any person would receive an external radiation dose or dose commitment in excess of the following organ doses:

Whole body; head and trunk; active blood−forming organs;
gonads; or lens of eye . . . . . 150 mSv (15 rems)
Hands and forearms; feet and ankles; localized
areas of skin averaged over areas no larger than
one square centimeter . . . . . 2000 mSv (200 rems)
Other organs . . . . . 500 mSv (50 rems).

e. Each device bears a durable, legible, clearly visible label or labels approved by the department, which contain in a clearly identified and separate statement, the following information: instructions and precautions necessary to assure safe installation, operation and servicing of the device; and the requirement or lack of requirement, for leak testing or for testing any "on−off" mechanism and indicator, including the maximum time interval for such testing and the identification of radioactive material by isotope, quantity of radioactivity and date of determination of the quantity.

Unofficial Text (See Printed Volume). Current through date and Register shown on Title Page.

Note: Documents such as operating and service manuals may be identified in the label and used to provide instructions and precautions necessary to assure safe installation, operation and servicing of the device.

f. Each device having a separable source housing that provides the primary shielding for the source also bears, on the source housing, a durable label containing the device model number and serial number; the isotope and quantity; the words, "Caution−Radioactive Material"; the radiation symbol described in DHS 157.29 (1); and the name of the manufacturer or initial distributor.

g. Each device meeting the criteria of DHS 157.11 (2) (b), bears a permanent (e.g., embossed, etched, stamped, or engraved) label affixed to the source housing if separable, or the device if the source housing is not separable, that includes the words, "Caution− Radioactive Material "and if practicable, the radiation symbol described in s. DHS 157.29 (1).

2. Unless the model, serial number and name of the manufacturer or distributor is specified elsewhere in labelling affixed to the device, the label or labels identified in subd. 1. e. shall also contain one of the following statements, as appropriate, in the same or substantially similar form:

a. The receipt, possession, use, and transfer of this device, Model , Serial No. , are subject to a general license or the equivalent and the regulations of the NRC or a state with which the NRC has entered into an agreement for the exercise of regulatory authority. This label shall be maintained on the device in a legible condition. Removal of this label is prohibited.

CAUTION − RADIOACTIVE MATERIAL

_____

Name of manufacturer or initial distributor

b. The receipt, possession, use, and transfer of this device, Model , Serial No. , are subject to a general license or the equivalent, and the regulations of a licensing state. This label shall be maintained on the device in a legible condition. Removal of this label is prohibited.

CAUTION − RADIOACTIVE MATERIAL

_____

Name of manufacturer or initial distributor

3. If the applicant desires that the device be required to be tested at intervals longer than 6 months, either for proper operation of the "on−off" mechanism and indicator, if any or for leakage of radioactive material or for both, the applicant shall include in the application sufficient information to demonstrate that such longer interval is justified by performance characteristics of the device or similar devices and by design features that have a significant bearing on the probability or consequences of leakage of radioactive material from the device or failure of the "on−off" mechanism and indicator. In determining the acceptable interval for the test for leakage of radioactive material, the applicant shall submit all of the following information:

a. Primary containment of the source capsule.
b. Protection of primary containment.
c. Method of sealing containment.
d. Containment construction materials.
e. Form of contained radioactive material.
f. Maximum temperature withstood during prototype tests.
g. Maximum pressure withstood during prototype tests.
h. Maximum quantity of contained radioactive material.
i. Radiotoxicity of contained radioactive material.
j. Operating experience with identical devices or similarly designed and constructed devices.

4. If the applicant desires that the general licensee under s. DHS 157.11 (2) (b) or equivalent regulations of the NRC, an agreement state or a licensing state be authorized to install the device, collect the sample to be analyzed by a specific licensee for leakage of radioactive material, service the device, test the "on− off" mechanism and indicator or remove the device from installation, the applicant shall include in the application written instructions to be followed by the general licensee, estimated calendar quarter doses associated with such activity or activities and bases for the estimates. The submitted information shall demonstrate that performance of such activity or activities by an individual untrained in radiological protection, in addition to other handling, storage, and use of devices under the general license, is unlikely to cause that individual to receive a calendar quarter dose in excess of 10% of the limits specified in s. DHS 157.22 (1) (a).

Unofficial Text (See Printed Volume). Current through date and Register shown on Title Page.

5. A person licensed under this paragraph to distribute devices to generally licensed persons shall do all the following:
a. Furnish a copy of the general license contained in ss. DHS 157.11 (2) (b), 157.02, 157.06 (1), 157.13 (18) and 157.32 (1) and (2), notification of the registration requirement contained in s. DHS 157.12 (1), a list of the services that can only be performed by a specific licensee, information on disposal options including estimated costs of disposal and the penalties for improper disposal under s. DHS 157.90 to each person to whom he or she directly or through an intermediate person transfers radioactive material in a device for use under the general license contained in s. DHS 157.11 (2) (b). Section DHS 157.11 (2) (b) 3. b. to 3. d. may be omitted from a copy of the general license, or notification of the registration requirements of s. DHS 157.12 (1) may be omitted if the requirements do not apply to a particular device.
b. Furnish a copy of the general license contained in the NRC's, agreement state's or licensing state's regulation equivalent to ss. DHS 157.02, 157.06 (1), 157.11 (2) (b), 157.13 (18) and 157.32 (1) and (2), notification of the registration requirement equivalent to s. DHS 157.12 (1), a list of the services that can only be performed by a specific licensee, information on disposal options including estimated costs of disposal, and the name or title, address, and phone number of the contact at the agreement state or NRC from which additional information may be obtained to each person to whom he or she directly or through an intermediate person transfers radioactive material in a device for use under the general license of the NRC, the agreement state or the licensing state prior to the transfer. If a copy of the general license in s. DHS 157.11 (2) (b) is furnished to the person, it shall be accompanied by a note explaining that the use of the device is regulated by the NRC, agreement state or licensing state under requirements substantially the same as those in s. DHS 157.11 (2) (b). Regulations from the NRC, agreement state or licensing state that are equivalent to s. DHS 157.11 (2) (b) 3. b. to 3. d., may be omitted from a copy of the general license if the requirements do not apply to a particular device. Notification of the registration requirement equivalent to s. DHS 157.12 (1) may also be omitted if it does not apply to a particular device.
c. Report to the department all transfers of such devices to persons for use under the general license in s. DHS 157.11 (2) (b). The report shall identify each general licensee by name and address, an individual by name or position who may constitute a point of contact between the department and the general licensee, the type and model number of device transferred and the quantity and type of radioactive material contained in the device. If one or more intermediate persons will temporarily possess the device at the intended place of use prior to its possession by the user, the report shall include identification of each intermediate person by name, address, contact and relationship to the intended user. If no transfers have been made to persons generally licensed under s. DHS 157.11 (2) (b) during the reporting period, the report shall so indicate. The report shall cover each calendar quarter and shall be filed within 30 days thereafter.
d. Report to the NRC all transfers of such devices to persons for use under the NRC general license in 10 CFR 31.5. If no transfers have been made to NRC licensees during the reporting period, the report shall so indicate and be reported to the NRC. e. For devices shipped to another state, report to the responsible state agency all transfers of devices manufactured and distributed under this paragraph for use under a general license in that state's regulations equivalent to s. DHS 157.11 (2) (b). If no transfers have been made to general licensees within a particular state during the reporting period, the report shall so indicate and be sent to the responsible state agency upon request of that agency.
f. The reports in subd. 5. d. and e. shall identify each general licensee by name and address, an individual by name or position who may constitute a point of contact between the agency and the general licensee, the type and model of the device transferred, and the quantity and type of radioactive material contained in the device. If one or more intermediate persons will temporarily possess the device at the intended place of use prior to its possession by the user, the report shall include identification of each intermediate person by name, address, contact and relationship to the intended user. If any changes are made to a device, such that the label is changed to update required information, the report shall identify the general licensee, the device, and the changes in information on the device label. The report shall be submitted within 30 days after the end of each calendar quarter in which such a device is transferred to the generally licensed person, cover each calendar quarter and clearly indicate the period covered by the report.
g. For devices received from a general licensee, the report shall include the identity of the general licensee by name and address, the type, model number and serial number of the device received and the date of receipt. In the case of devices not initially transferred by the reporting licensee, the report shall also include the name of the manufacturer or initial transferor.

Unofficial Text (See Printed Volume). Current through date and Register shown on Title Page.

h. Retain records showing the name, address, and the point of contact for each general licensee to whom he or she directly or through an intermediate person transfers radioactive material in devices for use under the general license provided in s. DHS 157.11 (2) (b) or equivalent regulations of the NRC, an agreement state or a licensing state. The records shall show the date of each transfer, the radionuclide and the quantity of radioactivity in each device transferred, the identity of any intermediate person, compliance with the report requirements of this subdivision and be retained for 5 years from the date of transfer.

i. If a notification of bankruptcy has been made under s. DHS 157.13 (10) or the license is to be terminated, a person licensed under this paragraph shall provide, upon request, to the department and to the appropriate regulatory agency, NRC or other agreement state having jurisdiction at the device's location, records of final disposition required under subd. 5. h.

(e) *Special requirements for the manufacture, assembly or repair of luminous safety devices for use in aircraft.* The department shall approve an application for a specific license to manufacture, assemble or repair luminous safety devices containing tritium or promethium−147 for use in aircraft, for distribution to persons generally licensed under s. DHS 157.11 (2) (c) if the applicant satisfies the general requirements specified in sub. (2) and the requirements of 10 CFR 32.53 to 32.56, 32.101 and 32.110 or their equivalent.

(f) *Special requirements for license to manufacture calibration or reference sources containing americium−241, plutonium or radium−226 for distribution to persons generally licensed under s. DHS 157.11 (2) (e).* The department shall approve an application for a specific license to manufacture calibration or reference sources containing americium−241, plutonium or radium−226 to persons generally licensed under s. DHS 157.11 (2) (e) if the applicant satisfies the general requirement of sub. (2) and the requirements of 10 CFR 32.57 to 32.59, 10 CFR 32.102 and 10 CFR 70.39 or their equivalent.

(g) *Manufacture and distribution of radioactive material for certain in vitro clinical or laboratory testing under general license.* The department shall approve an application for a specific license to manufacture or distribute radioactive material for use under the general license of s. DHS 157.11 (2) (f) if all of the following conditions are satisfied:

1. The applicant satisfies the general requirements specified in sub. (2).

2. The radioactive material is to be prepared for distribution in prepackaged units of one of the following:

a. Carbon−14 in units not exceeding 370 kBq (10 microcuries) each.

b. Cobalt−57 in units not exceeding 370 ~~MBq~~ kBq (10 microcuries) each.

c. Hydrogen−3 in units not exceeding 1.85 MBq (50 microcuries) each.

d. Iodine−125 in units not exceeding 370 ~~MBq~~ kBq (10 microcuries) each.

e. Mock Iodine−125 in units not exceeding 1.85 ~~MBq~~ kBq (0.05 microcurie) of iodine−129 and 185 ~~MBq~~ Bq (0.005 microcurie) of americium−241 each.

f. Iodine−131 in units not exceeding 370 kBq (10 microcuries) each.

g. Iron−59 in units not exceeding 740 kBq (20 microcuries) each.

h. Selenium−75 in units not exceeding 370 kBq (10 microcuries) each.

3. Each prepackaged unit bears a durable, clearly visible label that does all the following:

a. Identifies the radioactive contents as to chemical form and radionuclide, and indicates that the amount of radioactivity does not exceed 370 kBq (10 microcuries) of iodine−125, iodine−131, carbon−14, cobalt−57, or selenium−75; 1.85 MBq (50 microcuries) of hydrogen−3; 740 kBq (20 microcuries) of iron−59; or Mock Iodine−125 in units not exceeding 1.85 kBq (0.05 microcurie) of iodine−129 and 185 Bq (0.005 microcurie) of americium− 241 each.

b. Displays the radiation caution symbol described in s. DHS 157.29 (1) (a) and the words "CAUTION, RADIOACTIVE MATERIAL" and "Not for Internal or External Use in Humans or Animals".

4. One of the following statements, as appropriate, or a substantially similar statement that contains the information called for in one of the following statements, appears on a label affixed to each prepackaged unit or appears in a leaflet or brochure which accompanies the package:

a. This radioactive material may be received, acquired, possessed and used only by physicians, veterinarians, clinical laboratories or hospitals and only for in vitro clinical or laboratory tests not involving internal or external administration of the material, or the radiation from the material, to human beings or animals. Its receipt, acquisition, possession, use, and transfer are subject to the regulations and a general license of the NRC or of a state with which the NRC has entered into an agreement for the exercise of regulatory authority.

Unofficial Text (See Printed Volume). Current through date and Register shown on Title Page.

Name of manufacturer

b. This radioactive material may be received, acquired, possessed, and used only by physicians, veterinarians, clinical laboratories or hospitals and only for in vitro clinical or laboratory tests not involving internal or external administration of the material or the radiation therefrom, to human beings or animals. Its receipt, acquisition, possession, use and transfer are subject to the regulations and a general license of a licensing state.

_____

Name of manufacturer

5. The label affixed to the unit or the leaflet or brochure that accompanies the package, contains adequate information as to the precautions to be observed in handling and storing such radioactive material. In the case of the Mock Iodine−125 reference or calibration source, the information accompanying the source shall also contain directions to the licensee regarding the waste disposal requirements set out in s. DHS 157.30 (1).

(h) *Licensing the manufacture and distribution of ice detection devices.* The department shall approve an application for a specific license to manufacture and distribute ice detection devices to persons generally licensed under s. DHS 157.11 (2) (g) if all the following applies:

1. The applicant satisfies the general requirements of sub. (2) and ch. 450, Stats.

2. The criteria of 10 CFR 32.61, 32.62, 32.103 and 32.110 are met.

(i) *Manufacture, preparation, or transfer for commercial distribution or noncommercial transfer to medical use licensees in a consortium.of radioactive drugs containing radioactive material for medical use under subchapter VI.* The department shall approve an application for a specific license to manufacture, prepare, or transfer for commercial distribution or noncommercial transfer to medical use licensees in a consortium drugs containing radioactive material for use by a person authorized under subchapter VI if all the following conditions are satisfied:

1. The applicant satisfies the general requirements specified in sub. (2).

2. The applicant submits evidence that the applicant is at least one of the following:

a. Registered or licensed with the FDA as ~~a drug manufacturer~~ the owner or operator of a drug establishment that engages in the manufacture, preparation, propagation, compounding or processing of a drug under 21 CFR 207.20 (a).

b. Registered or licensed with a state agency as a drug manufacturer.

c. Licensed as a pharmacy by a state board of pharmacy.

d. Operating as a nuclear pharmacy within a Federal medical institution.

e. Registered with a state agency as a positron emission tomography (PET) drug production facility.

3. The applicant submits all of the following information on the radionuclide:

a. The chemical and physical form of the radiopharmaceutical.

b. The maximum activity per vial, syringe, generator, or other container of the radioactive drug and the shielding provided by the packaging to show medical use licensees that it is safe to handle and store.

4. The applicant satisfies all of the following labeling requirements:

a. A label is affixed to each transport radiation shield, whether the shield is constructed of lead, glass, plastic, or other material, of a radioactive drug to be transferred for commercial distribution or noncommercial transfer to medical use licensees in a consortium. The label shall include the radiation symbol and the words “CAUTION, RADIOACTIVE MATERIAL” or “DANGER, RADIOACTIVE MATERIAL”; the name of the radioactive drug or its abbreviation; and the quantity of radioactivity at a specified date and time. For radioactive drugs with a half life greater than 100 days, the time may be omitted.

b. A label is affixed to each syringe, vial, or other container used to hold a radioactive drug to be transferred for commercial distribution or noncommercial transfer to medical use licensees in a consortium. The label must include the radiation symbol and the words “CAUTION, RADIOACTIVE MATERIAL” or “DANGER, RADIOACTIVE MATERIAL” and an identifier that ensures that the syringe, vial, or other container may be correlated with the information on the transport radiation shield label.

5. The applicant submits information to demonstrate that individuals who will prepare the radioactive drugs for medical use meet the requirements of s. DHS 157.68.

6. The applicant shall submit information that he or she will do all of the following:

a. Possess and use instrumentation to measure the radioactivity of the drugs. The licensee shall have procedures for use of the instrumentation. The licensee shall measure, by direct measurement or by

Unofficial Text (See Printed Volume). Current through date and Register shown on Title Page.

combination of measurements and calculations, the amount of radioactivity in dosages of alpha, beta, or photon−emitting drugs prior to transfer for commercial distribution or noncommercial transfer to medical use licensees in a consortium.

b. Perform tests before initial use, periodically, and following repair, on each instrument for accuracy, linearity, and geometry dependence, as appropriate for the use of the instrument; and make adjustments when necessary.

c. Check each instrument for constancy and proper operation at the beginning of each day of use.

d. Measure the concentration of radionuclide contaminant in the first eluate after receipt of a molybdenum-99/technetium-99m or strontium-82/rubidium-82 generator, test the generator eluates for molybdenum-99 breakthrough or strontium-82 and strontium-85 contamination, respectively, according to s. DHS 157.63 (3), and retain a record of each measurement under s. DHS 157.71 (14).

7. Nothing in this paragraph relieves a licensee or registrant from complying with applicable FDA, other federal and state requirements governing radioactive drugs.

(j) *Manufacture and distribution of sources or devices containing radioactive material for medical use.* The department shall approve an application for a specific license to manufacture and distribute sources and devices containing radioactive material to persons licensed under subch. VI for use as a calibration, transmission or reference source or for the uses listed in ss. DHS 157.65 (1), 157.66 (1) ~~and~~ , 157.67 (1) and 157.70 if all of the following conditions are satisfied:

1. The applicant satisfies the general requirements in sub. (2).

2. The applicant submits sufficient information regarding each type of source or device pertinent to an evaluation of its radiation safety, including all of the following:

a. The radioactive material contained, its chemical and physical form and amount.

b. Details of design and construction of the source or device.

c. Procedures for and results of prototype tests to demonstrate that the source or device will maintain its integrity under stresses likely to be encountered in normal use and accidents.

d. For devices containing radioactive material, the radiation profile of a prototype device.

e. Details of quality control procedures to assure that production sources and devices meet the standards of the design and prototype tests.

f. Procedures and standards for calibrating sources and devices.

g. Legend and methods for labeling the radioactive content of sources and devices.

h. Instructions for handling and storing the source or device from the radiation safety standpoint. The instructions shall be included on a durable label attached to the source or device or attached to a permanent storage container for the source or device; provided, that instructions that are too lengthy for such label may be summarized on the label and printed in detail on a brochure which is referenced on the label.

3. The label affixed to the source or device or to the permanent storage container for the source or device, contains information on the radionuclide, quantity, and date of assay, and a statement that the source or device is licensed by the department for distribution to persons licensed under subch. VI and s. DHS 157.62 (4) or under equivalent licenses of the NRC, an agreement state or a licensing state.

4. If the applicant desires that the source or device be required to be tested for leakage of radioactive material at intervals longer than 6 months, the applicant shall include in the application sufficient information to demonstrate that such longer interval is justified by performance characteristics of the source or device or similar sources or devices and by design features that have a significant bearing on the probability or consequences of leakage of radioactive material from the source. In determining the acceptable interval for the test for leakage of radioactive material, the applicant shall submit all of the following information:

a. Primary containment of the source capsule.

b. Protection of primary containment.

c. Method of sealing containment.

d. Containment construction materials.

e. Form of contained radioactive material.

f. Maximum temperature withstood during prototype tests.

g. Maximum pressure withstood during prototype tests.

h. Maximum quantity of contained radioactive material.

i. Radiotoxicity of contained radioactive material.

Unofficial Text (See Printed Volume). Current through date and Register shown on Title Page.

j. Operating experience with identical sources or devices or similarly designed and constructed sources or devices.

(k) *Requirements for license to manufacture and distribute industrial products containing depleted uranium for mass−volume applications.*

1. The department shall approve an application for a specific license to manufacture industrial products and devices containing depleted uranium for use under s. DHS 157.11 (1) (c) or equivalent regulations of the NRC or an agreement state under the following conditions:

a. The applicant satisfies the general requirements specified in sub. (2).

b. The applicant submits sufficient information relating to the design, manufacture, prototype testing, quality control procedures, labeling or marking, proposed uses and potential hazards of the industrial product or device to provide reasonable assurance that possession, use or transfer of the depleted uranium in the product or device is not likely to cause any individual to receive in any period of one year a radiation dose in excess of 10% of the annual limits specified in s. DHS 157.22 (1).

c. The applicant submits sufficient information regarding the industrial product or device and the presence of depleted uranium for a mass−volume application in the product or device to provide reasonable assurance that unique benefits will accrue to the public because of the usefulness of the product or device.

2. In the case of an industrial product or device whose unique benefits are questionable, the department shall approve an application for a specific license under this paragraph only if the department determines that the product or device combines a high degree of utility and low probability of uncontrolled disposal and dispersal of significant quantities of depleted uranium into the environment.

3. The department may deny any application for a specific license under this paragraph if the end use or uses of the industrial product or device cannot be reasonably foreseen.

4. A person licensed under subd. 1. shall do all of the following:

a. Maintain the level of quality control required by the license in the manufacture of the industrial product or device and in the installation of the depleted uranium into the product or device.

b. Label or mark each unit to identify the manufacturer or initial transferor of the product or device and the number of the license under which the product or device was manufactured or initially transferred, the fact that the product or device contains depleted uranium and the quantity of depleted uranium in each product or device; and state that the receipt, possession, use and transfer of the product or device are subject to a general license or the equivalent and the regulations of the NRC or an agreement state.

c. Assure that the depleted uranium before being installed in each product or device has been impressed with the following legend clearly legible through any plating or other covering: “Depleted Uranium”.

d. Furnish a copy of the general license contained in s. DHS 157.11 (1) (c) and a copy of the “Certificate – Use of Depleted Uranium Under General License” to each person to whom he or she transfers depleted uranium in a product or device; or furnish a copy of the general license contained in the NRC’s or agreement state’s regulation equivalent to s. DHS 157.11 (1) (c) and a copy of the NRC’s or agreement state’s certificate with a note explaining that use of the product or device is regulated by the NRC or an agreement state under requirements substantially the same as those in s. DHS 157.11 (1) (c).

e. Report to the department all transfers of industrial products or devices to persons for use under the general license in s. DHS 157.11 (1) (c). The report shall identify each general licensee by name and address, an individual by name or position who may constitute a point of contact between the department and the general licensee, the type and model number of device transferred and the quantity of depleted uranium contained in the product or device. The report shall be filed with the department within 30 days after the end of each calendar quarter in which such a product or device is transferred to the generally licensed person. If no transfers have been made to persons generally licensed under s. DHS 157.11 (1) (c) during the reporting period, the report shall so indicate.

f. Report to the NRC all transfers of industrial products or devices to persons for use under the NRC general license in 10 CFR 40.25.

g. Report to the responsible state agency all transfers of devices manufactured and distributed under this paragraph for use under a general license in that state’s regulations equivalent to s. DHS 157.11 (1) (c).

h. The report required in subd. 4. f. and g. shall identify each general licensee by name and address, an individual by name and position who may constitute a point of contact between the department and the general licensee, the type and model number of the device transferred and the quantity of depleted uranium contained in the product or device. The report shall be filed with the department within 30 days after the end of each calendar quarter in which such product or device is transferred to the generally licensed person.

Unofficial Text (See Printed Volume). Current through date and Register shown on Title Page.

i. If no transfers have been made to NRC licensees during the reporting period, the report shall so indicate.
j. If no transfers have been made to general licensees within this state or another particular agreement state during the reporting period, this information shall be reported to the department or the responsible agency in another agreement state, upon the request of that agency.
k. Keep records showing the name, address and point of contact for each general licensee to whom he or she transfers depleted uranium in industrial products or devices for use under the general license provided in s. DHS 157.11 (1) (c) or equivalent regulations of the NRC or an agreement state. The records shall be maintained for a period of 3 years from the date of each transfer respectively and shall show the date of each transfer, the quantity of depleted uranium in each product or device transferred and compliance with the report requirements of this section.
(5) SPECIAL REQUIREMENTS FOR A SPECIFIC LICENSE FOR MEDICAL USE OF RADIOACTIVE MATERIAL. (a) *License application.* The department shall approve an application for a specific license for medical use of radioactive material if all of the following conditions are satisfied:
1. The applicant satisfies the general requirements specified in sub. (2).
2. The applicant submits procedures required by s. DHS 157.67, as applicable.
3. In addition to the requirements in this paragraph and par. (b), an application for a license or amendment for medical use of radioactive material as described in s. DHS 157.70 shall also include information regarding any radiation safety aspects of the medical use of the material that is not addressed in ss. DHS 157.59 to 157.62, as well as any specific information on each of the following:
a. Radiation safety precautions and instructions.
b. Training and experience of proposed users.
c. Methodology for measurement of dosages or doses to be administered to patients or human research subjects.
d. Calibration, maintenance and repair of instruments and equipment necessary for radiation safety.
4. An applicant for a license for mobile services shall assure that release of individuals or human research subjects to whom radioactive drugs or implants containing radioactive material are administered will be released under s. DHS 157.62 (8).
5. The applicant or licensee shall provide any other information requested by the department in its review of the application.
(b) *License amendment.* An application for a license amendment shall meet all of the following requirements:
1. A licensee shall apply for and must receive a license amendment before the licensee does any of the following:
a. Receives or uses radioactive material for a type of use that is permitted under this subchapter, but that is not authorized on the licensee's current license issued under this subchapter.
b. Permits anyone to work as an authorized user, authorized nuclear pharmacist, or authorized medical physicist under the license, except an individual who is certified by a specialty board appropriate to the intended use of radioactive material and recognized by the NRC; or is named as an authorized user, authorized nuclear pharmacist or authorized medical physicist on a department, NRC or other agreement state license, or on a permit issued by a licensee who is authorized by a Type A license of broad scope to permit the medical use of radioactive material.
c. Changes radiation safety officers, except as provided in s. DHS 157.61 (1) (c).
d. Receives radioactive material in excess of the amount or in a different form or receives a different radionuclide than is authorized on the license
e. Adds to or changes the areas identified in the application or on the license, except for areas where radioactive material is used only under s. DHS 157.63 (1) and (2).
f. Changes the address or addresses of use identified in the application or on the license.
2. An application for a license amendment shall include procedures required by s. DHS 157.67, as applicable.
(c) *Notifications.* A licensee shall make all of the following notifications:
1. Provide to the department a copy of the board certification and the written attestation, signed by a preceptor, the NRC or agreement state license or the permit issued by a licensee of broad scope for each individual no later than 30 days after the date that the licensee permits the individual to work as an authorized user, an authorized nuclear pharmacist or an authorized medical physicist under par. (b) 1. b. For individuals permitted to work under

Unofficial Text (See Printed Volume). Current through date and Register shown on Title Page.

par. (b) 1. b., within the same 30 day time frame, the licensee shall also provide, as appropriate, verification of completion of all the following:
a. Any additional case experience required in s. DHS 157.64 (4) (b) 2. g. for an authorized user under s. DHS 157.64 (1).
b. Training in device operation, safety procedures, and clinical use for the type of use for which authorization is sought. This training requirement may be satisfied by satisfactory completion of a training program provided by the vendor for new users or by receiving training supervised by an authorized user or authorized medical physicist, as appropriate, who is authorized for the type of use for which the individual is seeking authorization as an authorized user under s. DHS 157.67 (1).
c. Training for the type of use for which authorization is sought that includes hands−on device operation, safety procedures, clinical use, and the operation of a treatment planning system. This training requirement may be satisfied by satisfactorily completing either a training program provided by the vendor or by training supervised by an authorized medical physicist authorized for the type of use for which the individual is seeking authorization as an authorized medical physicist.
2. Notify the department in writing no later than 30 days after any of the following occurs:
a. An authorized user, an authorized nuclear pharmacist, a radiation safety officer or an authorized medical physicist permanently discontinues performance of duties under the license or has a name change.
b. The licensee's mailing address changes.
c. The licensee's name changes but the name change does not constitute a transfer of control of the license.
d. The licensee has added to or changed the areas where radioactive material is used under s. DHS 157.63 (1) and (2).
(d) *Exemptions for Type A broad scope licensees.*
1. A licensee possessing a Type A specific license of broad scope for medical use is exempt from all of the following requirements:
a. The provisions of par. (a) 3. regarding the need to file an amendment to the license for medical uses of radioactive material as described in s. DHS 157.70.
b. The provisions of par. (b) 1. b.
c. The provisions of par. (b) 1. e. regarding additions to or changes in the areas of use only at the addresses specified in the license.
d. The provisions of par. (c) 1.
e. The provisions of par. (c) 2. a. for an authorized user, an authorized nuclear pharmacist or an authorized medical physicist.
f. The provisions of s. DHS 157.61 (6) (a).
(6) SPECIAL REQUIREMENTS FOR A SPECIFIC LICENSE TO CONDUCT INDUSTRIAL RADIOGRAPHY OPERATIONS. The department shall approve an application for a specific license to conduct radiography using radioactive materials if all the following conditions are satisfied:
(a) The applicant satisfies the general requirements specified in sub. (2).
(b) The applicant has an adequate program for training radiographers and radiographer's assistants that meets the requirements of s. DHS 157.44 (3).
(c) The applicant submits procedures for verifying and documenting the certification status of radiographers and for ensuring that the certification of individuals acting as radiographers remains valid.
(d) The applicant submits written operating and emergency procedures that meet the requirements of s. DHS 157.44 (4).
(e) The applicant submits a description of a program for inspections of the job performance of each radiographer and radiographer's assistant at intervals not to exceed 6 months that meets the requirements of s. DHS 157.44 (3) (e).
(f) The applicant submits a description of the applicant's overall organizational structure as it applies to the radiation safety responsibilities in industrial radiography, including specified delegation of authority and responsibility.
(g) The applicant submits the qualifications of the individual designated as the radiation safety officer.
(h) If an applicant intends to perform leak testing of sealed sources or exposure devices containing depleted uranium shielding, the applicant shall describe the procedures for performing the test. The description shall include all of the following:
1. Methods of collecting the samples.
2. Qualifications of the individual who analyzes the samples.

Unofficial Text (See Printed Volume). Current through date and Register shown on Title Page.

3. Instruments to be used.
4. Methods of analyzing the samples.
(i) The applicant verifies that calibration of survey meters and alarming rate meters is performed according to the requirements of ss. DHS 157.38 and 157.44 (6) (g) 4., respectively.
(j) The applicant identifies and describes the location or locations of all field stations and permanent radiographic installations.
(k) The applicant identifies the location or locations where all records required by this and other subchapters will be maintained.
(l) If a license application includes underwater radiography, a description of all of the following:
1. Radiation safety procedures and radiographer responsibilities unique to the performance of underwater radiography.
2. Radiographic equipment and radiation safety equipment unique to underwater radiography.
3. Methods for gas−tight encapsulation of equipment.
(m) If an application includes offshore platform or lay−barge radiography, a description of all of the following:
1. Transport procedures for radioactive material to be used in industrial radiographic operations.
2. Storage facilities for radioactive material.
3. Methods for restricting access to radiation areas.
(n) The applicant describes the program for inspection and maintenance of radiographic exposure devices and storage containers to ensure proper functioning of components important to safety.
(7) SPECIAL REQUIREMENTS FOR A SPECIFIC LICENSE TO CONDUCT IRRADIATOR OPERATIONS. (a) The department shall approve an application for a specific license for the use of radioactive material in an irradiator if all the following conditions are satisfied:
1. The applicant satisfies the general requirements in sub. (2).
2. The applicant submits an adequate program for training irradiator operators that includes all of the following:
a. Classroom training.
b. On−the−job or simulator training.
c. Safety reviews.
d. The method employed by the applicant to test each operator's understanding of the department's regulations and licensing requirements and the irradiator operating, safety and emergency procedures.
e. Minimum training and experience of personnel who may provide training.
3. The applicant submits an outline of the written operating and emergency procedures that describes the radiation safety aspects of the procedures.
4. The applicant submits a description of the overall organizational structure for managing the irradiator, including the radiation safety responsibilities and authorities of the radiation safety officer and those management personnel who have radiation safety responsibilities or authorities, and who within the management structure has the authority to stop unsafe operations. The applicant shall also describe the training and experience required for the position of radiation safety officer.
5. The applicant includes a description of the access control systems required by s. DHS 157.73 (2), radiation monitors required by s. DHS 157.73 (5), the method of detecting leaking sources required by s. DHS 157.73 (16) including the sensitivity of the method and a diagram of the facility showing the locations of all required interlocks and radiation monitors.
6. If the applicant intends to perform leak testing, the applicant shall establish procedures for performing leak testing of dry− source−storage sealed sources and submit a description of these procedures to the department. The description shall include all the following:
a. Methods of collecting the leak test samples.
b. Qualifications of the individual who collects the samples.
c. Instruments to be used.
d. Methods of analyzing the samples.
7. If licensee personnel are to load or unload sources, the applicant shall describe the qualifications and training of the personnel and the procedures to be used. If the applicant intends to contract for source loading or unloading at its facility, the loading or unloading shall only be done by a person specifically authorized by the department, the NRC or another agreement state to load or unload irradiator sources. The information in this subdivision shall also be indicated on the application.

Unofficial Text (See Printed Volume). Current through date and Register shown on Title Page.

8. The applicant describes the inspection and maintenance checks, including the frequency of the checks required by s. DHS 157.73 (17).
(b) A license issued under par. (a) is subject to all of the following conditions:
1. The applicant may not begin construction of a new irradiator prior to the submission to the department of both an application for a specific license for the irradiator and the fee required by s. DHS 157.10 (3). As used in this section, the term "construction" includes the construction of any portion of the permanent irradiator structure on the site, but does not include engineering and other design work, purchase of a site, site surveys or soil testing, site preparation, site excavation, construction of warehouse or auxiliary structures, and other similar tasks. Any activities undertaken prior to the issuance of a license are entirely at the risk of the applicant and have no bearing on the issuance of a license by the department.
2. Any application for a license or for amendment of a license authorizing use of a teletherapy−type unit for irradiation of materials or objects may include proposed alternatives for the requirements of this subsection. The department shall approve the proposed alternatives if the applicant provides adequate rationale for the proposed alternatives and demonstrates the likely provision of an adequate level of safety for workers and the public.
3. Each license will be issued with the condition that the licensee will, at any time before expiration of the license, upon the department's request, submit a written statement to enable the department to determine whether the license should be modified, suspended or revoked.
(8) SPECIAL REQUIREMENTS FOR A SPECIFIC LICENSE TO CONDUCT WELL LOGGING. The department shall approve an application for a specific license for the use of radioactive material in well logging if all the following conditions are satisfied:
(a) The applicant satisfies the general requirements specified in sub. (2).
(b) The applicant submits an adequate program for training well logging supervisors and well logging assistants that includes all the following:
1. Initial training.
2. On−the−job training.
3. Annual safety reviews provided by the licensee.
4. Means by which the applicant will demonstrate the well logging supervisor's knowledge and understanding of and ability to comply with the department's rules and licensing requirements and the applicant's operating and emergency procedures.
5. Means by which the applicant will demonstrate the well logging assistant's knowledge and understanding of and ability to comply with the applicant's operating and emergency procedures.
(c) The applicant submits to the department written operating and emergency procedures as described in s. DHS 157.53 (2) or an outline or summary of the procedures that includes the important radiation safety aspects of the procedures.
(d) The applicant establishes and submits to the department the applicant's program for annual inspections of the job performance of each well logging supervisor to ensure that the department's rules, license requirements, and the applicant's operating and emergency procedures are followed. The applicant's inspection records shall be retained for 3 years after each annual internal inspection.
(e) The applicant submits a description of its overall organizational structure as it applies to the radiation safety responsibilities in wire−line services or subsurface tracer studies, including specified delegations of authority and responsibility.
(f) If an applicant wants to perform leak testing of sealed sources, the applicant identifies the manufacturers and the model numbers of the leak test kits to be used. If the applicant wants to analyze its own wipe samples, the applicant establishes procedures to be followed and submits a description of these procedures to the department. The description shall include all the following:
1. Instruments to be used.
2. Methods of performing the analysis.
3. Pertinent experience of the person who will analyze the wipe samples.
(9) ISSUANCE OF SPECIFIC LICENSES. (a) If the department determines that an application meets the applicable requirements, the department shall issue a specific license within 180 days of filing of a complete application authorizing the proposed activity in such form and containing such conditions and limitations as the department deems appropriate or necessary.

Unofficial Text (See Printed Volume). Current through date and Register shown on Title Page.

(b) The department may incorporate in any license at the time of issuance or thereafter, any additional requirements and conditions with respect to the licensee's receipt, possession, use and transfer of radioactive material subject to this section as the department deems appropriate or necessary.

(10) SPECIFIC TERMS AND CONDITIONS OF LICENSES. (a) A license issued under this section shall be subject to all the provisions of ss. 254.31 to 254.45, Stats., this chapter and orders of the department.

(b) No license issued or granted under this section and no right to possess or utilize radioactive material granted by any license issued under this subsection may be transferred, assigned or in any manner disposed of, either voluntarily or involuntarily, directly or indirectly, through transfer of control of any license to any person unless the department, after securing full information, finds that the transfer complies with the applicable provisions of the statutes, rules and orders of the department, and gives its consent in writing.

(c) A person licensed by the department under this section shall confine use and possession of the material licensed to the locations and purposes authorized in the license.

(e) A licensee shall notify the department in writing within 10 days following the filing of a voluntary or involuntary petition for bankruptcy under any Chapter of Title 11 of the United States Code by or against any one of the following:

1. The licensee.

2. An entity defined in 11 USC 101(14) controlling the licensee or listing the license or licensee as property of the estate.

3. An affiliate defined in 11 USC 101(2) of the licensee.

Note: Title 11 of the U.S. Code deals with bankruptcy.

(f) The notification specified in par. (e) shall indicate the bankruptcy court in which the petition for bankruptcy was filed and the date of the filing of the petition.

(11) EXPIRATION AND TERMINATION OF LICENSES AND DECOMMISSIONING OF SITES AND SEPARATE BUILDING OR OUTDOOR AREAS.

(a) Except as provided in sub. (12) (b), a specific license shall expire at the end of the specified day in the month and year stated in the license. If an application for license renewal has been filed at least 30 days prior to the expiration date stated in the existing license and the department denies the renewal application, the license shall expire on the date as stated in the determination of denial. If an application for license renewal is filed less than 30 days from the expiration date stated in the existing license, the department may deny the renewal application and the license shall expire on the expiration date stated in the license.

(b) A specific license revoked by the department expires at the end of the day on the date of the department's final determination, or on the expiration date stated in the determination, or as otherwise provided by department order.

(c) A specific license remains valid, with respect to possession of radioactive material, until the department notifies the licensee in writing that the license is terminated. While the license is valid, the licensee shall do all of the following:

1. Limit actions involving radioactive material to those related to decommissioning and other activities related to preparation for release for unrestricted use.

2. Continue to control entry to restricted areas until they are suitable for release for unrestricted use and the department notifies the licensee in writing that the license is terminated.

(d) A licensee shall do all of the following:

1. Notify the department within 60 days of any of the following:

a. Expiration of the license pursuant to par. (a) or (b).

b. The licensee's deciding to permanently cease principal activities at the entire site or in any separate building or outdoor area that contains residual radioactivity such that the building or outdoor area is unsuitable for release in accordance with department requirements.

c. The absence of conduct of any principal activities under the license for a period of 24 months.

d. The absence of conduct of any principal activities for a period of 24 months in any separate building or outdoor area that contains residual radioactivity such that the building or outdoor area is unsuitable for release in accordance with department requirements.

2. If any separate building or outdoor area contains stored radioactive material or residual radioactivity so that the building or outdoor area is unsuitable for release, do one of the following:

a. Begin decommissioning its site, separate building or outdoor area if a decommissioning plan has been previously approved by the department.

Unofficial Text (See Printed Volume). Current through date and Register shown on Title Page.

b. Submit a decommissioning plan within 12 months if required by par. (f) and begin decommissioning upon approval of that plan.
(e) Concurrent with the notification required by par. (d), the licensee shall maintain in effect all decommissioning financial assurances established by the licensee pursuant to s. DHS 157.15 in conjunction with a license issuance or renewal or as required by this section. The amount of the financial assurance shall be increased, or may be decreased, as appropriate, to cover the detailed cost estimate for decommissioning established pursuant to par. (f) 4. Following approval of the decommissioning plan and with the department's approval, a licensee may reduce the amount of the financial assurance as decommissioning proceeds and radiological contamination is reduced at the site.
(f) A licensee shall submit a decommissioning plan to the department if required by license condition or if the procedures and activities necessary to carry out decommissioning of the site, separate building or outdoor area have not been previously approved by the department and the procedures and activities may adversely effect the health and safety of workers or the public. The procedures may not be carried out prior to the department's approval of the decommissioning plan. Examples of applicable procedures and activities include any of the following cases:
1. Procedures that would involve techniques not applied routinely during cleanup or maintenance operations.
2. Procedures by which workers would be entering areas not normally occupied where surface contamination and radiation levels are significantly higher than routinely encountered during operation.
3. Procedures that could result in significantly greater airborne concentrations of radioactive materials than are present during operation.
4. Procedures that could result in significantly greater releases of radioactive material to the environment than those associated with operation.
(g) The department may approve an alternate schedule for submittal of a decommissioning plan required pursuant to par. (d) if the department determines that the alternative schedule is necessary to the effective conduct of decommissioning operations and presents no undue risk from radiation to the public health and safety and is otherwise in the public interest.
(h) The proposed decommissioning plan for the site or separate building or outdoor area shall include all of the following elements:
1. A description of the conditions of the site, separate building or outdoor area sufficient to evaluate the acceptability of the plan.
2. A description of planned decommissioning activities.
3. A description of methods used to ensure protection of workers and the environment against radiation hazards during decommissioning.
4. A description of the planned final radiation survey.
5. An updated detailed cost estimate for decommissioning, comparison of that estimate with present funds set aside for decommissioning, and a plan for assuring the availability of adequate funds for completion of decommissioning.
6. For decommissioning plans calling for completion of decommissioning later than 24 months after plan approval, a justification for the delay based on the criteria in par. (i).
(i) The department shall approve the proposed decommissioning plan if the information in the plan demonstrates that the decommissioning will be completed as soon as practicable and that the health and safety of workers and the public will be ensured.
(j) Except as provided in par. (h), a licensee shall complete decommissioning of the site or separate building or outdoor area no later than 24 months following the initiation of decommissioning. When decommissioning involves the entire site, a licensee shall request license termination no later than 24 months following the initiation of decommissioning.
(k) The department may approve a request for an alternative schedule for completion of decommissioning of the site, separate building or outdoor area, and license termination if appropriate, if the department determines that the alternative is warranted after consideration of all the following:
1. Whether it is technically feasible to complete decommissioning within the allotted 24−month period.
2. Whether sufficient waste disposal capacity is available to allow completion of decommissioning within the allotted
24−month period.

Unofficial Text (See Printed Volume). Current through date and Register shown on Title Page.

3. Whether a significant volume reduction in wastes requiring disposal will be achieved by allowing short−lived radionuclides to decay.
4. Whether a significant reduction in radiation exposure to workers may be achieved by allowing short−lived radionuclides to decay.
5. Other site−specific factors which the department may consider appropriate on a case−by−case basis, such as the regulatory requirements of other government agencies, court decisions, ground−water treatment activities, monitored natural ground−water restoration, actions that could result in more environmental harm than deferred cleanup, and other factors beyond the control of the licensee.
(l) As the final step in decommissioning, a licensee shall do all the following:
1. Certify the disposition of all licensed material, including accumulated wastes, by submitting a completed department form for disposition of radioactive materials or equivalent information.
Note: The form may be obtained by writing the Department at: Department of Health and Family Services, Radiation Protection Section, PO Box 2659, Madison WI 53701−2659; or by downloading from the Department website at: http://DHS.wisconsin. gov/dph_beh/RadiatioP/Index.htm.
2. Conduct a radiation survey of the premises where the licensed activities were carried out and submit a report of the results of this survey, unless the licensee demonstrates in some other manner that the premises are suitable for release in accordance with the criteria for decommissioning in s. DHS 157.33.
3. Report levels of gamma radiation in units of millisieverts (microroentgen) per hour at one meter from surfaces, and report levels of radioactivity, including alpha and beta, in units of megabecquerels per 100 square centimeters, disintegrations per minute per 100 square centimeters or microcuries per 100 square centimeters − removable and fixed − for surfaces, megabecquerels (microcuries) per milliliter for water, and becquerels (picocuries) per gram for solids such as soils or concrete.
4. Specify the survey instruments used and certify that each instrument is properly calibrated and tested.
Note: Submit reports to the Department at: Department of Health and Family Services, Radiation Protection Section, P.O. Box 2659, Madison WI 53701−2659.
(m) The department shall terminate a specific license, including an expired license, by written notice to the licensee when the department determines all of the following have occurred:
1. Radioactive material has been properly disposed of.
2. Reasonable effort has been made to eliminate residual radioactive contamination, if present.
3. The licensee has filed with the department sufficient information, including a radiation survey, to demonstrate that the premises are suitable for release in accordance with the criteria for decommissioning in s. DHS 157.33.
4. The licensee has submitted records required under s. DHS 157.13 (18) (b) and (d) to the department.
(12) RENEWAL OF LICENSES. (a) An application for renewal of a specific license shall be filed under sub.(1).
(b) If a licensee, not less than 30 days prior to expiration of his or her existing license, has filed an application in proper form for renewal or for a new license authorizing the same activities, the license may not expire until final action by the department.
Note: A license renewal form may be obtained by writing the Department at: Department of Health and Family Services, Radiation Protection Section, P.O. Box 2659, Madison WI 53701−2659; or by downloading from the Department website at: http://dDHS.wisconsin.gov/dph_beh/RadiatioP/Index.htm.
(13) AMENDMENT OF LICENSES AT REQUEST OF LICENSEE. An application for amendment of a license shall be filed under sub.(1) and shall specify the respects in which the licensee desires the license to be amended and the grounds for the amendment. The licensee shall include the appropriate fee specified in s. DHS 157.10 (3) with the amendment application.
Note: A specific license application form is not required for an amendment request.
(14) DEPARTMENT ACTION ON APPLICATIONS TO RENEW OR AMEND. In considering an application by a licensee to renew or amend the license, the department shall apply the criteria set forth in subs. (2), (3) and (4) and in subchs. IV, V and VI, as applicable.
(15) TRANSFER OF MATERIAL. (a) No licensee may transfer radioactive material except as authorized under this subsection.
(b) Except as otherwise provided in its license and subject to the provisions of pars. (c) and (d), a licensee may transfer radioactive material to any of the following:
1. The department only after receiving prior approval from the department.
2. The U.S. department of energy.
3. Any person exempt from these regulations to the extent permitted under the exemption.
4. Any person authorized to receive radioactive material under terms of a general license or its equivalent, or a specific license or equivalent licensing document, issued by the department, the NRC, any agreement

Unofficial Text (See Printed Volume). Current through date and Register shown on Title Page.

state, any licensing state or to any person otherwise authorized to receive radioactive material by the federal government or any agency thereof, the department, an agreement state or a licensing state.
5. Any person as otherwise authorized by the department in writing.
6. The agency in another state that regulates radioactive material under 42 USC 5801.
(c) Before transferring radioactive material to a specific licensee of the department, the NRC, an agreement state or a licensing state, or to a general licensee who is required to register with the department, the NRC, an agreement state or a licensing state prior to receipt of the radioactive material, a licensee transferring the material shall verify that the transferee's license authorizes the receipt of the type, form and quantity of radioactive material to be transferred.
(d) A licensee transferring radioactive materials as described in par. (c) may use any of the following methods for verification:
1. The transferor may possess and read a copy of the transferee's specific license or registration certificate that is currently in force.
2. The transferor may possess a written statement, from the transferee, certifying that the transferee is authorized by license or registration certificate to receive the type, form and quantity of radioactive material to be transferred, specifying the license or registration certificate number, issuing agency and expiration date.
3. For emergency shipments, the transferor may accept an oral statement by the transferee that the transferee is authorized by license or registration certificate to receive the type, form and quantity of radioactive material to be transferred, specifying the license or registration certificate number, issuing agency and expiration date; provided that the oral statement is confirmed in writing within 10 days.
4. The transferor may obtain other information compiled by a reporting service from official records of the department, the NRC, an agreement state or a licensing state regarding the identity of licensees and the scope and expiration dates of licenses and registration.
5. When none of the methods of verification described in subds. 1. to 4. are readily available or when a transferor desires to verify that information received by one of such methods is correct or up−to−date, the transferor may obtain and record confirmation from the department, the NRC, an agreement state or a licensing state that the transferee is licensed to receive the radioactive material.
(e) Shipment and transport of radioactive material shall be under the provisions of subch. XIII.
(16) MODIFICATION, SUSPENSION AND REVOCATION OF LICENSES. (a) The terms and conditions of a license shall be subject to amendment, revision or modification by the department. The department may suspend, revoke or modify the license due to amendments to ss. 254.31 to 254.45, Stats., this chapter or orders issued by the department.
(b) The department may revoke, suspend or modify any license or reciprocal recognition of an out−of−state license, in
whole or in part, for any material false statement in the application or any statement of fact required under provisions of ss. 254.31 to 254.45, Stats., or because of conditions revealed by such application or statement of fact or any report, record or inspection or other means which would warrant the department to refuse to grant a license on an original application or for violation of or failure to observe any of the terms and conditions of ss. 254.31 to 254.45, Stats., this chapter or orders issued by the department or voluntary application for amendment, revision or modification submitted by the licensee.
(c) Except in cases of willfulness or those in which the public health, interest or safety requires otherwise, the department may not modify, suspend or revoke a license unless, prior to such action, the department notifies the licensee, in writing, of the facts or conduct that warrant the action and the licensee has been accorded an opportunity to demonstrate or achieve compliance with all lawful requirements.
(d) A person who considers himself or herself affected by a department denial of license application or amendment, license revocation, or license suspension may submit to the department a written request for hearing about the license action. A written request for hearing on a license action shall be received by the department within 10 days after receipt of a notice of the department's decision to deny license application or renewal or revoke or suspend a license. The hearing request shall include the information required in s. DHS 157.90 (3).
Note: Hearing requests shall be sent to: Department of Health and Family Services, Radiation Protection Section, P.O. Box 2659, Madison, WI 53701−2659. Certified mail may be sent to: Department of Health and Family Services, Radiation Protection Section, 1 West Wilson St, Room 150, Madison, WI 53702−0007.
(17) EVENT REPORTING. (a) *Events that must be reported immediately.* A licensee shall notify the department by telephone as soon as possible but not later than 4 hours after the discovery of an event, such

Unofficial Text (See Printed Volume). Current through date and Register shown on Title Page.

as a fire, explosion or toxic gas release, which prevents immediate protective actions necessary to avoid exposures to radiation, radioactive materials or releases of licensed radioactive material that could exceed regulatory limits established in this chapter.

(b) *Events that must be reported within 24 hours.* A licensee shall notify the department within 24 hours by telephone, facsimile, or in person after the discovery of any of the following events involving licensed material:

1. An unplanned contamination event that meets all of the following criteria:

a. Requires access to the contaminated area, by workers or the public, to be restricted for more than 24 hours by imposing additional radiological controls or by prohibiting entry into the area.

b. Involves a quantity of material greater than 5 times the lowest annual limit on intake specified in Appendix E for the material.

c. Restricts access to the area for a reason other than to allow isotopes with a half−life of less than 24 hours to decay prior to decontamination.

2. An event in which equipment is disabled or fails to function as designed under any of the following circumstances:

a. The equipment is required by regulation or license condition to prevent releases exceeding regulatory limits, to prevent exposures to radiation and radioactive materials exceeding regulatory limits, or to mitigate the consequences of an accident.

b. The equipment is required to be available and operable when it is disabled or fails to function.

c. No redundant equipment is available and operable to perform the required safety function.

3. An event that requires unplanned medical treatment of an individual with spreadable radioactive contamination on the individual's clothing or body.

4. A fire or explosion damaging any licensed material or any device, container or equipment containing licensed material under any of the following circumstances:

a. The quantity of material involved is greater than 5 times the lowest annual limit on intake specified in Appendix E for the material limits.

b. The damage affects the integrity of the licensed material or its container.

Note: Submit report to the Department via telephone at (608) 267-4797 or via facsmilie at (608) 267-3695.

(c) *Content and submission of reports.* 1. Reports required to be submitted to the department under pars. (a) and (b) shall, to the extent that the information is available, include all the following information:

a. The caller's name and call back telephone number.

b. A description of the event, including the date and time of its occurrence.

c. The exact location of the event.

d. The isotopes, quantities, and chemical and physical form of the licensed material involved in the event.

e. Any personnel radiation exposure data available.

2. A licensee who makes a report required by par. (a) or (b) shall submit a written report within 30 days of the initial telephone or facsimile report containing all of the following information:

a. A description of the event, including the probable cause and the manufacturer and model number, if applicable, of any equipment that failed or malfunctioned.

b. The exact location of the event.

c. The isotopes, quantities, and chemical and physical form of the licensed material involved.

d. The date and time of the event.

e. Corrective actions taken or planned and the results of any evaluations or assessments.

f. The extent to which individuals were exposed to radiation or to radioactive materials without identification of individuals by name.

Note: Submit written reports to the Department at: Department of Health Services, Radiation Protection Section, P.O. Box 2659, Madison WI 53701−2659.

(18) RECEIPT, TRANSFER AND DISPOSAL RECORDS. (a) *Record retention.* A licensee shall retain records required by s. DHS 157.06 (1) or by license condition. If a retention period is not otherwise specified by this chapter or license condition, the record shall be retained until the department terminates each license.

(b) *Transfer of records to the department.* Prior to license termination, a licensee authorized to possess radioactive material, in an unsealed form, with a half−life greater than 120 days, shall forward to the department all records of disposal of licensed materialmade under s. DHS 157.30 (2) to (5), including burials authorized before January 28, 1981, and the results of measurements and calculations required by s. DHS 157.31 (3).

Unofficial Text (See Printed Volume). Current through date and Register shown on Title Page.

(c) *Transfer of records to new licensee.* 1. If licensed activities are transferred or assigned in accordance with s. DHS 157.13 (10) (b), each licensee authorized to possess radioactive material in unsealed form, with a half−life greater than 120 days, shall transfer the following records to the new licensee:
a. Records of disposal of licensed material made under s. DHS 157.30 (2) to (5), including burials authorized before January 28, 1981.
b. Records of the results of measurements and calculations required by s. DHS 157.31 (3).
2. The new licensee shall be responsible for maintaining the records required in subd. 1. until the license is terminated.
(d) *Transfer of records of decommissioning activities.* A licensee shall forward the records required by s. DHS 157.15 (7) to the department prior to license termination.
(19) SERIALIZATION OF NATIONALLY TRACKED SOURCES. A licensee who manufactures a nationally tracked source shall assign a unique serial number to each nationally tracked source. Serial numbers shall be composed only of alpha-numeric characters.
History: CR 01−108: cr. Register July 2002 No. 559, eff. − see Note at the start of the chapter; **CR 06−021: cr. (1) (i), (4) (d) 1. f. and g., (5) (c) 1. a. to c., am. (4) (c), (d) 1. (intro.) and d., 5. i., and (i) 1., (8) (intro.), (11) (d) 2. (intro.) and (17) (b) 1. (intro.), r. and recr. (4) (i) 5., renum. (5) (c) 1. to be (5) (c) 1. (intro.) and am., r. (10) (d), Register October 2006 No. 610, eff. 11−1−06**.

DHS 157.14 Reciprocity. (1) RECOGNITION OF LICENSES ISSUED BY THE NRC OR OTHER STATES. The department shall reciprocally recognize radioactive material licenses issued by the NRC or a state agency in another state under the conditions set forth in this section.
(2) LICENSES OF BYPRODUCT, SOURCE AND SPECIAL NUCLEAR MATERIAL IN QUANTITIES NOT SUFFICIENT TO FORM A CRITICAL MASS.
(a) Subject to this chapter, any person who holds a specific license from the NRC or another agreement state, and issued by the agency having jurisdiction where the licensee maintains an office for directing the licensed activity and at which radiation safety records are normally maintained, is granted a general license to conduct the activities authorized in such licensing document within this state for a period not in excess of 180 days in any year provided that all of the following occur:
1. The licensing document does not limit the activity authorized by the document to specified installations or locations.
2. The out−of−state licensee notifies the department in writing at least 3 days prior to engaging in the activity. The notification shall indicate the exact location of use, start date, time period, names, documentation of training, in−state address of the individual performing the activity, radiation sources to be used within the state, operating and emergency procedures and shall be accompanied by a copy of the pertinent licensing document. The out−of− state licensee shall also notify the department of any changes in the work location, schedule, radioactive material or work activities. If, for a specific case, the 3−day period would impose an undue hardship on the out−of−state licensee, the licensee may, upon written application to the department, obtain permission to proceed sooner. The department may waive the requirement for filing additional written notifications during the remainder of the year following the receipt of the initial notification from a person engaging in activities under the general license granted under this paragraph.
Note: The form may be obtained by writing the department at: Department of Health and Family Services, Radiation Protection Section, P.O. Box 2659, Madison WI 53701−2659; or by downloading from the department website at: http://DHS.wisconsin. gov/dph_beh/RadiatioP/Index.htm.
3. The out−of−state licensee complies with this chapter and with all the terms and conditions of the licensing document, except any terms and conditions that may be inconsistent with this chapter.
4. The out−of−state licensee supplies any other information as required by the department.
5. The out−of−state licensee does not transfer or dispose of radioactive material possessed or used under the general license granted under this paragraph except by transfer to a person who is either specifically licensed by the department, the NRC or another agreement state to receive the material, or is exempt from the requirements for a license for the material under s. DHS 157.09 (2) (a).
6. The out−of−state licensee pays the fee prescribed in s. DHS 157.10 (3).
(b) Any person who holds a specific license issued by the NRC or another agreement state authorizing the holder to manufacture, transfer, install or service a device described in s. DHS 157.11 (2) (b) within areas subject to the jurisdiction of the licensing body is granted a general license to install, transfer, demonstrate or service the device in this state provided that all of the following occur:
1. The person files a report with the department within 30 days after the end of each calendar quarter in which any device is transferred to or installed in this state. Each report shall identify each general licensee to whom the device is transferred by name and address, the type and model number of device transferred and the quantity and type of radioactive material contained in the device.

Unofficial Text (See Printed Volume). Current through date and Register shown on Title Page.

2. The device has been manufactured, labeled, installed and serviced under applicable provisions of the specific license issued to the person by the NRC or an agreement state.
3. The person provides assurance that any labels required to be affixed to the device under regulations of the authority that licensed manufacture of the device bear the following statement: "Removal of this label is prohibited."
4. The holder of the specific license furnishes to each general licensee to whom the device is transferred or on whose premises the device is installed a copy of the general license contained in s. DHS 157.11 (2) (b) or in equivalent regulations of the agency having jurisdiction over the manufacture and distribution of the device.
(c) The department may withdraw, limit or qualify its acceptance of any specific license or equivalent licensing document issued by the NRC or an agreement state or any product distributed under the licensing document upon determining that the action is necessary to prevent undue hazard to public health and safety or property.
(3) LICENSES OF NARM. (a) Subject to this chapter, any person who holds a specific license for NARM from a licensing state, and issued by the agency having jurisdiction where the licensee maintains an office for directing the licensed activity and at which radiation safety records are normally maintained, is granted a general license to conduct the activities authorized within this state for a period not in excess of 180 days in any year provided that all of the following occur:
1. The licensing document does not limit the authorized activity to specified installations or locations.
2. The out−of−state licensee notifies the department in writing at least 3 days prior to engaging in such activity. The notification shall indicate the location, period and type of proposed possession and use within the state and shall be accompanied by a copy of the pertinent licensing document. If, for a specific situation, the 3−day period would impose an undue hardship on the out−of−state licensee, the licensee may, upon written application to the department, obtain permission to proceed sooner.
Note: The department may waive the 3−day notification requirement when the activities of the out−of−state licensee are routinely scheduled at the same location in the state.
3. The out−of−state licensee complies with this chapter and with all the terms and conditions of the licensing document except any terms and conditions that may be inconsistent with this chapter.
4. The out−of−state licensee supplies any other information as required by the department.
5. The out−of−state licensee does not transfer or dispose of radioactive material possessed or used under the general license granted in this paragraph except by transfer to a person who is either specifically licensed by the department or by another licensing state to receive radioactive material, or exempt from the requirements for a license for radioactive material under s. DHS 157.09 (1).
6. The out−of−state licensee pays the fee prescribed in s. DHS 157.10 (3).
(b) Notwithstanding the provisions of par. (a), any person who holds a specific license issued by a licensing state authorizing the holder to manufacture, transfer, install or service a device described in s. DHS 157.11 (2) (b) within areas subject to the jurisdiction of the licensing body is granted a general license to install, transfer, demonstrate or service the device in this state provided that all of the following conditions are met:
1. The person files a report with the department within 30 days after the end of each calendar quarter in which any device is transferred to or installed in this state. Each report shall identify each general licensee to whom the device is transferred by name and address, the type of device transferred and the quantity and type of radioactive material contained in the device.
2. The device has been manufactured, labeled, installed and serviced under applicable provisions of the specific license issued to the person by a licensing state.
3. The person assures that any labels required to be affixed to the device under regulations of the authority that licensed
manufacture of the device bears the following statement: "Removal of this label is prohibited."
4. The holder of the specific license furnishes to each general licensee to whom the holder transfers the device or on whose premises the holder installs the device a copy of the general license contained in s. DHS 157.11 (2) (b) or in equivalent regulations of the agency having jurisdiction over the manufacture and distribution of the device.
(c) The department may withdraw, limit or qualify its acceptance of any specific license or equivalent licensing document issued by a licensing state or any product distributed under the licensing document upon determining that the action is necessary to prevent undue hazard to public health and safety or property.

Unofficial Text (See Printed Volume). Current through date and Register shown on Title Page.

(4) JURISDICTIONAL STATUS. (a) A licensee shall determine the jurisdictional status of a temporary job−site before radioactive materials may be used at a job site at any federal facility within the state. If the jurisdictional status is unknown, the licensee shall contact the federal agency that controls the site to determine if the job site is under exclusive federal jurisdiction.
(b) A licensee shall obtain authorization from another agreement state or the NRC before radioactive material may be used at a temporary job site in another state. Authorization may be obtained either by applying for reciprocity or a specific license from that state or the NRC.
History: CR 01−108: cr. Register July 2002 No. 559, eff. − see Note at the start of the chapter; **CR 06−021: am. (2) (a) 5. and (b) (intro.), Register October 2006 No. 610, eff. 11−1−06**.

DHS 157.15 Financial assurance and records for decommissioning. (1) FINANCIAL ASSURANCE REQUIREMENT FOR A SPECIFIC LICENSE. (a) *Unsealed radioactive material, sealed sources or plated foils.* A person applying for a specific license authorizing the possession and use of unsealed radioactive material, sealed sources or plated foils shall submit a decommissioning funding plan as described in sub. (5) with the license application for any of the following types of materials:
1. Unsealed radioactive material with a half−life greater than 120 days and in quantities greater than 105 times the applicable quantities listed in Appendix I.
2. Unsealed radioactive material involving a combination of isotopes with R divided by 105 being greater than one, where R is defined as the sum of the ratios of the quantity of each isotope to the applicable value in Appendix I.
3. Sealed sources or plated foils with a half−life greater than 120 days and in quantities greater than 1012 times the applicable quantities listed in Appendix I.
4. Sealed sources or plated foils involving a combination of isotopes with R divided by 1012 being greater than one, where R is defined as the sum of the ratios of the quantity of each isotope to the applicable value in Appendix I.
(b) Other radioactive material. A person applying for a specific license authorizing the possession and use of radioactive material not covered by par. (a) with a half−life greater than 120 days and in quantities specified in sub. (4) shall do either of the following:
1. Submit a decommissioning funding plan as described in sub. (5).
2. Submit a written certification, signed by the chief financial officer or other individual designated by management to represent the licensee, that financial assurance has been provided in the amount prescribed in sub. (4) using one of the methods described in sub. (5) and a signed original of the financial instrument obtained to satisfy the requirements of sub. (6). The written certification may state that the appropriate assurance will be obtained after the application has been approved and the license issued by the department but before receipt of radioactive material by the applicant. If the applicant defers execution of the financial instrument until after the license has been issued, the applicant shall submit to the department a signed original of the financial instrument obtained before receipt of licensed material. If the applicant does not defer execution of the financial instrument, the applicant shall submit to the department, as part of the certification, a signed original of the financial instrument obtained to satisfy the requirements of sub. (6).
(2) EXEMPTIONS. The following are exempt from the requirements of this section:
(a) A state, local or other government agency, except for a government agency licensed to handle or process radioactive waste.
(b) A person authorized to possess only radioactive materials with a half−life of 65 days or less.
(c) Other persons exempted by the department based on a review of the license application.
(3) IMPLEMENTATION. (a) A person who possesses a specific license authorizing the possession and use of radioactive material issued on or after the effective date of August 1, 2002, which is ofa type described in sub. (1), shall provide financial assurance for decommissioning under this section.
(b) A person who possesses a specific license issued before the effective date of August 1, 2002, shall do one of the following:
1. For a license authorizing the use of radioactive material meeting the criteria of sub. (1) (a), submit a decommissioning funding plan as described in sub. (5) and a certification of financial assurance for at least $1,125,000, under the criteria in sub. (4), with any application for license renewal.
2. For a license authorizing the use of radioactive material meeting the criteria of sub. (1) (b), submit a decommissioning funding plan as described in sub. (5) or a certification of financial assurance for decommissioning according to the criteria of sub. (4) with any application for license renewal.

Unofficial Text (See Printed Volume). Current through date and Register shown on Title Page.

(c) The term of the financial assurance shall be from the issuance or renewal of the license until the department terminates the license.
(d) A licensee's financial assurance arrangements may be reviewed annually by the department to recognize any increases or decreases resulting from inflation or deflation, changes in engineering plans, activities performed or any other condition affecting costs for decommissioning to ensure that sufficient funding is available to cover liability that remains until license termination.
(4) REQUIRED AMOUNTS FOR FINANCIAL ASSURANCE.
(a) A licensee shall provide the following minimum amounts of financial assurance for decommissioning, unless otherwise specified by the department:
1. One million one hundred twenty−five thousand dollars if the quantity of material is greater than 104 but less than or equal to 105 times the applicable quantities of Appendix I in unsealed form. For a combination of isotopes, R divided by 104 is greater than one but R divided by 105 is less than or equal to one.
2. Two hundred twenty−five thousand dollars if the quantity of material is greater than 103 but less than or equal to 104 times the applicable quantities of Appendix I in unsealed form. For a combination of isotopes, R divided by 103 is greater than one but R divided by 104 is less than or equal to one.
3. One hundred thirteen thousand dollars if the quantity of material is greater than 1010 but less than or equal to 1012 times the applicable quantities of Appendix I in sealed sources or plated foils. For a combination of isotopes, R divided by 1010 is greater than one but R divided by 1012 is less than or equal to one.
(b) The department may eliminate, reduce or raise the required amount of financial assurance under par. (a) for an individual applicant or licensee based on the cost estimate for decommissioning included in the decommissioning funding plan required under sub. (5) (a).
(5) DECOMMISSIONING FUNDING PLAN. (a) A decommissioning funding plan shall include all the following information:
1. A cost estimate for decommissioning that considers all of the following:
a. Probable extent of contamination through the use or possession of radioactive material at the facility or site and the projected cost of removal of the contamination to a level specified by the department. The evaluation shall encompass probable contaminating events associated with the licensee's or applicant's operation and shall be based on factors such as quantity, half−life, radiation hazard, toxicity and chemical and physical forms.
b. The extent of possible offsite property damage caused by operation of the facility or site.
c. The cost of removal and disposal of radiation sources that are or would be generated, stored, processed or otherwise present at the licensed facility or site.
d. The costs involved in reclaiming the property on which the facility or site is located and all other properties contaminated by radioactive material authorized under the license.
2. A description of the method of assuring funds for decommissioning according to sub. (6).
3. A description of the method for adjusting cost estimates and associated funding levels periodically over the life of the facility. Cost estimates shall be adjusted at intervals not to exceed 3 years.
(b) The decommissioning funding plan shall also contain the licensee's certification that financial assurance has been provided in the amount of the cost estimate for decommissioning and a signed original of the financial instrument obtained to satisfy the requirements of sub. (6).
(6) FINANCIAL ASSURANCE OPTIONS. A licensee may use any of the following methods to provide financial assurance for decommissioning:
(a) *Prepayment.* Prepayment is the deposit prior to operation into an account segregated from licensee assets and outside the licensee's administrative control of cash or liquid assets in an amount sufficient to pay decommissioning costs. Prepayment may be in the form of a trust, escrow account, government fund, certificate of deposit or deposit of government securities.
(b) *Surety method, insurance or other guarantee.* Payment of future decommissioning costs shall be guaranteed by a surety method, insurance or other guarantee. A surety method may be in the form of a surety bond, letter of credit or line of credit. Self insurance, or any method which essentially constitutes self−insurance, may not be used as a method of providing financial assurance. Any surety method or insurance used to provide financial assurance for decommissioning must meet all of the following criteria:
1. The surety method or insurance shall be open−ended or, if written for a specified term, renewed automatically unless 90 days or more prior to the renewal date, the issuer notifies the department, the beneficiary and the licensee of its intention not to renew. The surety method or insurance shall also provide

Unofficial Text (See Printed Volume). Current through date and Register shown on Title Page.

that the full face amount be paid to the beneficiary automatically prior to the expiration without proof of forfeiture if the licensee fails to provide a replacement acceptable to the department within 30 days after receipt of notification of cancellation.

2. The surety method or insurance shall be payable to a trust established for decommissioning costs. The department shall approve the trustee and the trust.

Note: An acceptable trustee includes the State of Wisconsin or an entity having the authority to act as a trustee and whose trust operations are regulated and examined by a state or federal government agency.

3. The surety method or insurance shall remain in effect until the department terminates the license.

(c) *External sinking fund.* An external sinking fund may be used in which deposits are made at least annually, coupled with a surety method or insurance, the value of which may decrease by the amount being accumulated in the sinking fund. An external sinking fund may be in the form of a trust, escrow account, government fund, certificate of deposit or deposit of government securities. The surety or insurance provisions shall meet the requirements of par. (b).

(d) *Statement of intent.* A state or local government licensee exempt under sub. (2) shall submit a written statement of intent containing a cost estimate for decommissioning or an amount based on sub. (4). The cost estimate shall indicate that funds for decommissioning will be obtained when necessary.

(7) RECORDS. (a) A licensee shall keep the following records of information related to decommissioning of a facility in an identified location until the site is released for unrestricted use:

1. Records of spills or other unusual occurrences involving the spread of radioactive contamination in and around the facility, equipment or site. The records may be limited to instances where contamination remains after any cleanup procedures or when there is reasonable likelihood that radioactive contaminants may have spread to inaccessible areas or into porous materials such as concrete. The records shall include any known information on identification of involved nuclides, quantities, forms and concentrations.

2. As−built drawings and modifications of structures and equipment in restricted areas where radioactive materials are used or stored, and of locations of possible inaccessible contamination such as buried pipes that may contain radioactive contaminants. If required drawings are referenced, each relevant document does not need to be indexed individually. If drawings are not available, a licensee shall substitute appropriate records of available information concerning the areas and locations of inaccessible contamination.

Note: As−built architectural and engineering drawings need to reflect the final details of the structures and equipment as they were constructed.

3. Except for areas containing only sealed sources that have not leaked or where no contamination remains after a leak, or radioactive materials with half−lives of less than 65 days, a list containing all the following:

a. All areas currently and formerly designated as restricted areas.

b. All areas outside of restricted areas that require documentation under subd. 1.

c. All areas outside of restricted areas where current and previous wastes have been buried as documented under s. DHS 157.31 (9).

d. All areas outside of restricted areas that contain radioactive material such that, if the license expired, the licensee would be required to either decontaminate the area to meet the criteria for decommissioning in s. DHS 157.13 (11) (d) or apply for approval for disposal under s. DHS 157.30 (2).

4. Records of the cost estimate performed for the decommissioning funding plan or the amount certified for decommissioning and records of the funding method used for assuring funds.

(b) A licensee shall keep the records in par. (a) until the site is decommissioned and approved by the department for unrestricted use.

(c) Prior to a licensed activity being transferred to another licensee under s. DHS 157.13 (10) (b), the original licensee shall transfer all records under par. (a) to the new licensee. The new licensee shall be responsible for maintaining the records until their license is terminated by the department.

(d) The list under par. (a) 3. shall be updated every 2 years.

History: CR 01−108: cr. Register July 2002 No. 559, eff. − see Note at the start of the chapter; **CR 06−021: am. (1) (a) (intro.), (b) 2., (3) (b) 1., (4) (a) 1. to 3., (5) (a) 3. and (7) (a) 3. (intro.), cr. (1) (a) 3. and 4., Register October 2006 No. 610, eff. 11−1−06.**

DHS 157.16 Licenses held on the effective date of this subchapter. History: CR 01−108: cr. Register July 2002 No. 559, eff. − see Note at the start of the chapter; **CR 06−021: r. Register October 2006 No. 610, eff. 11−1−06. DHS 157.17 NARM held on the effective date of this subchapter. History:** CR 01−108: cr. Register July 2002 No. 559, eff. − see Note at the start of the chapter; **CR 06−021: r. Register October 2006 No. 610, eff. 11−1−06.**

Subchapter III — Standards for Protection from Radiation

DHS 157.20 Implementation. (1) Any existing license or registration condition more restrictive than this subchapter remains in force until there is an amendment or renewal of the license or registration.

Unofficial Text (See Printed Volume). Current through date and Register shown on Title Page.

(2) If a condition attached to a license or registration exempts a licensee or registrant from a provision of this subchapter in effect on or before August 1, 2002, the condition also exempts the licensee or registrant from the corresponding provision of this subchapter.
(3) If a condition attached to a license or registration cites provisions of this subchapter in effect prior to August 1, 2002, that do not correspond to any provisions of this subchapter, the license or registration condition remains in force until there is an amendment or renewal of the license or registration that modifies or removes the condition.
History: CR 01−108: cr. Register July 2002 No. 559, eff. 8−1−02.

DHS 157.21 Radiation protection programs. (1) A licensee or registrant shall develop, document and implement a radiation protection program sufficient to ensure compliance with the provisions of this subchapter.
Note: See s. DHS 157.31 (2) for record keeping requirements relating to programs in this subchapter.
(2) A licensee or registrant shall use, to the extent practical, procedures and engineering controls based upon sound radiation protection principles to achieve occupational doses and doses to members of the public that are as low as is reasonably achievable.
(3) A licensee or registrant shall, at intervals not to exceed 12 months, review the radiation protection program content and implementation.
(4) To implement the ALARA requirements of sub. (2), and notwithstanding the requirements in s. DHS 157.23 (1), a licensee shall establish a constraint on air emissions of radioactive material to the environment, excluding Radon−222 and its progeny, so that an individual member of the public likely to receive the highest dose does not receive a total effective dose equivalent in excess of 0.1 mSv (10 mrem) per year from the air emissions. A licensee to whom this requirement applies shall report as provided in s. DHS 157.32 (3) any time the licensee exceeds the dose limit of 0.1 mSv (10 mrem) per year and shall promptly take appropriate corrective action to safeguard against recurrence.
History: CR 01−108: cr. Register July 2002 No. 559, eff. 8−1−02.

DHS 157.22 Occupational dose limits. (1) OCCUPATIONAL DOSE LIMITS FOR ADULTS.
(a) A licensee or registrant shall control the occupational dose to individual adults, except for planned special exposures under sub. (6), to the following dose limits:
1. An annual limit, which is the more limiting of either of the following:
a. The total effective dose equivalent being equal to 0.05 Sv (5 rem).
b. The sum of the deep dose equivalent and the committed dose equivalent to any individual organ or tissue other than the lens of the eye being equal to 0.5 Sv (50 rem).
2. The annual limits to the lens of the eye, to the skin of the whole body and to the skin of the extremities which are:
a. A lens dose equivalent of 0.15 Sv (15 rem).
b. A shallow dose equivalent of 0.5 Sv (50 rem) to the skin of the whole body or to the skin of any extremity.
(b) Doses received in excess of the annual limits, including doses received during accidents, emergencies and planned special exposures, shall be subtracted from the limits for planned special exposures that the individual may receive during the current year and during the individual's lifetime.
(c) The assigned deep dose equivalent and shallow dose equivalent shall be for the portion of the body receiving the highest exposure, as follows:
1. When the external exposure is determined by measurement with an external personal monitoring device, the deep-dose equivalent shall be used in place of the effective dose equivalent, unless the effective dose equivalent is determined by a method approved by the department. The assigned deep−dose equivalent shall be for the part of the body receiving the highest exposure. The assigned shallow− dose equivalent shall be the dose averaged over the contiguous 10 square centimeters of skin receiving the highest exposure. The deep−dose equivalent, lens−dose equivalent and shallow−dose equivalent may be assessed from surveys or other radiation measurements for the purpose of demonstrating compliance with the occupational dose limits, if the individual monitoring device was not in the region of highest potential exposure, or the results of individual monitoring are unavailable.
2. When a protective apron is worn while working with medical fluoroscopic equipment and monitoring is conducted as specified in s. DHS 157.25 (2) (a) 5., the effective dose equivalent for external radiation shall be determined as follows:

Unofficial Text (See Printed Volume). Current through date and Register shown on Title Page.

a. When only one individual monitoring device is used and it is located at the neck outside the protective apron, and the exposure is less than 25% of any limit specified in par. (a), the reported deep dose equivalent shall be the effective dose equivalent for external radiation.
b. When only one individual monitoring device is used and it is located at the neck outside the apron and the exposure is greater than 25% of the any limit specified in par. (a), the effective dose equivalent shall be the deep dose equivalent multiplied by 0.3.
c. If a protective apron is worn, the individual monitoring device shall be located at the neck, which is, collar. If a second monitoring device is used, for the same purpose, it shall be located under the protective apron at the waist. The estimated effective dose equivalent (*HE*) when wearing 2 monitoring devices, one located outside and one under a protective apron, shall be calculated using the following formula: *HE* (estimate) = 1.5 *HW* + 0.04 *HN* where *HW* = badge reading from the waist badge under the apron and *HN* = badge reading from the neck badge worn outside the apron.
(d) Derived air concentration and annual limit on intake values are specified in Table I of Appendix E and may be used to determine the individual's dose and to demonstrate compliance with the occupational dose limits.
Note: See s. DHS 157.31 (7) for instructions about recording the exposure levels.
(e) In addition to the annual dose limits, a licensee or registrant shall limit the soluble uranium intake by an individual to 10 milligrams in a week in consideration of chemical toxicity.
Note: See footnote c/ of Appendix E for the calculation method for determining DAC for soluable mixtures of uranium.
(f) A licensee or registrant shall reduce the dose that an individual may be allowed to receive in the current year by the amount of occupational dose received while employed by any other person during the current year.
Note: See sub. (5) for instruction on determining occupational dose.
(2) COMPLIANCE WITH REQUIREMENTS FOR SUMMATION OF EXTERNAL AND INTERNAL DOSES. (a) If a licensee or registrant is required to monitor under both s. DHS 157.25 (2) (a) and (b), a licensee or registrant shall demonstrate compliance with the dose limits by summing external and internal doses. If a licensee or registrant is required to monitor only under s. DHS 157.25 (2) (a) or (b), then summation is not required to demonstrate compliance with the dose limits. A licensee or registrant may demonstrate compliance with the requirements for summation of external and internal doses by meeting one of the conditions in par. (b) and the conditions of pars. (c) and (d). The dose equivalents for the lens of the eye, the skin and the extremities are not included in the summation, but are subject to separate limits.
(b) If the only intake of radionuclides is by inhalation, the total effective dose equivalent limit is not exceeded if the sum of the deep dose equivalent divided by the total effective dose equivalent limit, and any one of the following, does not exceed unity:
1. The sum of the fractions of the inhalation ALI for each radionuclide.
2. The total number of derived air concentration−hours for all radionuclides divided by 2,000.
3. The sum of the calculated committed effective dose equivalents to all significantly irradiated organs or tissues calculated from bioassay data using appropriate biological models and expressed as a fraction of the annual limit. For purposes of this subdivision, an organ or tissue is deemed to be significantly irradiated if, for that organ or tissue, the product of the weighting factors, w_T, and the committed dose equivalent, $H_{T,50}$, per unit intake is greater than 10% of the maximum weighted value of $H_{T,50}$, that is, $w_T H_{T,50}$, per unit intake for any organ or tissue.
(c) If the occupationally exposed individual also receives an intake of radionuclides by oral ingestion greater than 10% of the applicable oral ALI, a licensee or registrant shall account for this intake and include it in demonstrating compliance with the limits.
(d) A licensee or registrant shall evaluate and, to the extent practical, account for intakes through wounds or skin absorption. The intake through intact skin has been included in the calculation of DAC for hydrogen−3 and does not need to be evaluated or taken into account.
(3) DETERMINATION OF EXTERNAL DOSES FROM AIRBORNE RADIOACTIVE MATERIAL. (a) A licensee or registrant shall, when determining the dose from airborne radioactive material, include the contribution to the deep dose equivalent, eye dose equivalent, and shallow dose equivalent from external exposure to the radioactive cloud.
Note: See Appendix E, footnotes [a/] and [b/] for methods used for calculating dose from exposure to a radioactive cloud for materials that have a half−life of less than 2 hours.
(b) Airborne radioactivity measurements and DAC values may not be used as the primary means to assess the deep dose equivalent when the airborne radioactive material includes radionuclides other than noble gases or if the cloud of airborne radioactive material is not relatively uniform in its distribution of

Unofficial Text (See Printed Volume). Current through date and Register shown on Title Page.

radioactive material in the cloud. The determination of the deep dose equivalent to an individual shall be based upon measurements using instruments or individual monitoring devices.

(4) DETERMINATION OF INTERNAL EXPOSURE. (a) For purposes of assessing dose used to determine compliance with occupational dose equivalent limits, a licensee or registrant shall, when required under s. DHS 157.25 (2), take suitable and timely measurements of all of the following:

1. Concentrations of airborne radioactive materials in work areas.
2. Quantities of radionuclides in the body.
3. Quantities of radionuclides excreted from the body.
4. Combinations of the measurements in subds. 1. to 3.

(b) Unless respiratory protective equipment is used, as provided in s. DHS 157.27 (3), or the assessment of intake is based on bioassays, a licensee or registrant shall assume that an individual inhales radioactive material at the airborne concentration in which the individual is present.

(c) When the physical and biochemical properties of the radionuclides taken into the body or the behavior of the material in an individual is known, a licensee or registrant may do any of the following:

1. Use that information to calculate the committed effective dose equivalent, and, if used, the licensee or registrant shall document that information in the individual's record.
2. Upon prior approval of the department, adjust the DAC or ALI values to reflect the actual physical and chemical characteristics of airborne radioactive material, for example, aerosol size distribution or density.
3. Separately assess the contribution of fractional intakes of Class D, W or Y compounds of a given radionuclide to the committed effective dose equivalent.

Note: See Appendix E for a description of the pulmonary clearance times of the compounds involved in the exposure.

(d) If a licensee or registrant chooses to assess intakes of Class Y material using the measurements given in par. (a) 2. or 3., a licensee or registrant may delay the recording and reporting of the assessments for periods up to 7 months, unless otherwise required by s. DHS 157.32 (2) or (3).

Note: The delay permits the licensee or registrant to make additional measurements basic to the assessments.

(e) If the identity and concentration of each radionuclide in a mixture are known, the fraction of the DAC applicable to the mixture for use in calculating DAC−hours shall be either of the following:

1. The sum of the ratios of the concentration to the appropriate DAC value, that is, D, W or Y, from Appendix E for each radionuclide in the mixture.
2. The ratio of the total concentration for all radionuclides in the mixture to the most restrictive DAC value for any radionuclide in the mixture.

(f) If the identity of each radionuclide in a mixture is known, but the concentration of one or more of the radionuclides in the mixture is not known, the DAC for the mixture shall be the most restrictive DAC of any radionuclide in the mixture.

(g) When a mixture of radionuclides in air exists, a licensee or registrant may disregard certain radionuclides in the mixture if all of the following apply:

1. The licensee or registrant uses the total activity of the mixture in demonstrating compliance with the dose limits in s. DHS 157.22 (1) and in complying with the monitoring requirements in s. DHS 157.25 (2) (b).
2. The concentration of any radionuclide disregarded is less than 10% of its DAC.
3. The sum of the percentages under subds. 1. and 2. for all of the radionuclides disregarded in the mixture does not exceed 30%.

(h) When determining the committed effective dose equivalent, the following information may be considered:

1. To calculate the committed effective dose equivalent, the licensee or registrant may assume that the inhalation of one ALI, or an exposure of 2,000 DAC−hours, results in a committed effective dose equivalent of 0.05 Sv (5 rem) for radionuclides that have their ALIs or DACs based on the committed effective dose equivalent.
2. For an ALI and the associated DAC determined by the nonstochastic organ dose limit of 0.5 Sv (50 rem), the intake of radionuclides that would result in a committed effective dose equivalent of 0.05 Sv (5 rem), that is, the stochastic ALI, is listed in parentheses in Table I of Appendix E. The licensee or registrant may, as a simplifying assumption, use the stochastic ALI to determine committed effective dose equivalent. However, if the licensee or registrant uses the stochastic ALI, the licensee or registrant shall also demonstrate that the limit in s. DHS 157.22 (1) (a) 1. b. is met.

(5) DETERMINATION OF PRIOR OCCUPATIONAL DOSE. (a) For each individual who may enter a licensee's or registrant's restricted area and is likely to receive, in a year, an occupational dose requiring

Unofficial Text (See Printed Volume). Current through date and Register shown on Title Page.

monitoring under s. DHS 157.25 (2), a licensee or registrant shall determine the occupational radiation dose received during the current year.

(b) Before an individual may participate in a planned special exposure, a licensee or registrant shall determine all of the following:

1. The internal and external doses from all previous planned special exposures.

2. All doses in excess of the limits, including doses received during accidents and emergencies, received during the lifetime of the individual.

(c) In complying with the requirements of par. (a), a licensee or registrant may use either of the following means:

1. Accept, as a record of the occupational dose that the individual received during the current year, a written signed statement from the individual, or from the individual's most recent employer for work involving radiation exposure, that discloses the nature and the amount of any occupational dose that the individual received during the current year.

2. Obtain, by telephone, facsimile, electronic media or letter, reports of the individual's dose equivalent from the most recent employer for work involving radiation exposure, or the individual's current employer, if the individual is not employed by the licensee or registrant. A licensee or registrant shall request a written verification of the dose data if the authenticity of the transmitted report cannot be established.

(d) 1. A licensee or registrant shall record the exposure history, as required by par. (a), on a occupational radiation exposure form provided by the department, or other clear and legible record of all the information required on that form. The form or record shall show each period in which the individual received occupational exposure to radiation or radioactive material and shall be signed by the individual who received the exposure. For each period for which a licensee or registrant obtains reports, a licensee or registrant shall use the dose shown in the report in preparing the occupational radiation exposure form or equivalent. For any period in which a licensee or registrant does not obtain a report, a licensee or registrant shall place a notation on the occupational radiation exposure form or equivalent indicating the periods of time for which data are not available.

Note: An occupational radiation exposure history form may be obtained by writing to: Department of Health and Family Services, Radiation Protection Section, P.O. Box 2659, Madison WI 53701−2659; or by downloading the form from the Department website at: http://dDHS.wisconsin.gov/dph_beh/RadiatioP/Index.htm.

2. A licensee or registrant is not required to partition historical dose between external dose equivalents and internal committed dose equivalents. Further, occupational exposure histories obtained and recorded on the department's occupational radiation exposure form or equivalent before the effective date of August 1, 2002, may not have included effective dose equivalent, but may be used in the absence of specific information on the intake of radionuclides by the individual.

(e) If a licensee or registrant is unable to obtain a complete record of an individual's current and previously accumulated occupational dose, a licensee or registrant shall assume all the following:

1. In establishing administrative controls under sub. (1) (f) for the current year, that the allowable dose limit for the individual is reduced by 12.5 mSv (1.25 rem) for each quarter for which records were unavailable and the individual was engaged in activities that could have resulted in occupational radiation exposure.

2. That the individual is not available for planned special exposures.

(f) A licensee or registrant shall retain the records on the department's occupational radiation exposure form or equivalent until the department terminates each pertinent license or registration requiring this record. A licensee or registrant shall retain records used in preparing the occupational radiation exposure form or equivalent for 3 years after the record is made.

Note: The Department's occupational radiation exposure history form may be obtained by writing to: Department of Health and Family Services, Radiation Protection Section, P.O. Box 2659, Madison WI 53701−2659; or by downloading the form from the Department website at: http://DHS.wisconsin.gov/dph_beh/RadiatioP/ Index.htm.

(6) PLANNED SPECIAL EXPOSURES. A licensee or registrant may authorize an adult worker to receive doses in addition to and accounted for separately from the doses received under the limits specified in sub. (1) provided that each of the following conditions is satisfied:

(a) A licensee or registrant authorizes a planned special exposure only in an exceptional situation when alternatives that might avoid the dose estimated to result from the planned special exposure are unavailable or impractical.

(b) A licensee or registrant and employer, if the employer is not the licensee or registrant, specifically authorizes the planned special exposure, in writing, before the exposure occurs.

Unofficial Text (See Printed Volume). Current through date and Register shown on Title Page.

(c) Before a planned special exposure, a licensee or registrant ensures that each individual involved has been informed and instructed in all the following:
1. The purpose of the planned operation.
2. The estimated doses and associated potential risks and specific radiation levels or other conditions that might be involved in performing the task.
3. The measures to be taken to keep the dose ALARA considering other risks that may be present.
(d) Prior to permitting an individual to participate in a planned special exposure, a licensee or registrant ascertains prior doses as required by sub. (5) (b) during the lifetime of the individual for each individual involved.
(e) Subject to sub. (1) (b), a licensee or registrant may not authorize a planned special exposure that would cause an individual to receive a dose from all planned special exposures and all doses in excess of any of the following limits:
1. The numerical values of any of the dose limits in sub. (1) (a) in any year.
2. Five times the annual dose limits in sub. (1) (a) during the individual's lifetime.
(f) A licensee or registrant maintains records of the conduct of a planned special exposure under s. DHS 157.31 (6) and submits a written report under s. DHS 157.32 (4).
(g) A licensee or registrant records the best estimate of the dose resulting from the planned special exposure in the individual's record and informs the individual, in writing, of the dose within 30 days from the date of the planned special exposure. The dose from planned special exposures may not be considered in controlling future occupational dose of the individual under sub. (1) (a) but shall be included in evaluations required by pars. (d) and (e).
(7) OCCUPATIONAL DOSE LIMIT FOR A MINOR. (a) The annual occupational dose limit for a minor is 10% of the annual occupational dose limits specified for adult workers in sub. (1). (b) A minor may not work in an area where the minor could receive a deep dose equivalent in excess of .02 mSv (2 mrem) in any one hour unless authorized in writing by the department.
(8) DOSE EQUIVALENT TO AN EMBRYO OR FETUS. (a) A licensee or registrant shall ensure that the dose equivalent to an embryo or fetus during the entire pregnancy, due to occupational exposure of a declared pregnant woman, does not exceed 5 mSv (500 mrem). **Note:** See DHS 157.31 (7) for record keeping requirements.
(b) A licensee or registrant shall make efforts to avoid substantial variation above a uniform monthly exposure rate to a declared pregnant woman so as to satisfy the limit in par. (a). **Note:** The National Council on Radiation Protection and Measurements recommended in NCRP Report No. 91, "Recommendations on Limits for Exposure to Ionizing Radiation," June, 1, 1987, that no more than 0.5 mSv (50 mrem) to the embryo or fetus be received in any one month.
(c) The dose equivalent to an embryo or fetus is the sum of all of the following:
1. The deep dose equivalent to the declared pregnant women.
2. The dose equivalent to the embryo or fetus resulting from radionuclides in the embryo or fetus and radionuclides in the declared pregnant woman.
(d) If the dose equivalent to the embryo or fetus is found to have exceeded 5 mSv (500 mrem), or is within 0.5 mSv (50 mrem) of this dose, by the time the woman declares the pregnancy to a licensee or registrant, a licensee or registrant shall be deemed to be in compliance with par. (a) if the additional dose equivalent to the embryo or fetus does not exceed 0.5 mSv (50 mrem) during the remainder of the pregnancy.
History: CR 01−108: cr. Register July 2002 No. 559, eff. 8−1−02; **CR 06−021: am. (1) (a) 2. (intro.), b.., and (8) (c) (intro.), r. and recr. (1) (c) 1., Register October 2006 No. 610, eff. 11−1−06**.

DHS 157.23 Radiation dose limits for individual members of the public.

(1) DOSE LIMITS FOR INDIVIDUAL MEMBERS OF THE PUBLIC. (a) A licensee or registrant shall conduct operations to meet all of the following:
1. The total effective dose equivalent to individual members of the public from the licensed or registered operation may not exceed one mSv (100 mrem) in a year, exclusive of the dose contribution from background radiation, medical radiation exposure, exposure to individuals administered radioactive material and released in accordance with s. DHS 157.62 (8), voluntary participation in medical research programs and the licensee's or registrant's disposal of radioactive material into sanitary sewerage under s. DHS 157.30 (3). Facilities with radiation machines installed prior to the effective date of August 1, 2002, that meet the requirements of 5 mSv (500 mrem) in a year are exempt from this requirement.

Unofficial Text (See Printed Volume). Current through date and Register shown on Title Page.

2. The dose in any unrestricted area from external sources does not exceed 0.02 mSv (2 mrem) in any one hour, exclusive of the dose contributions from patients administered radioactive material and released in accordance with s. DHS 157.62 (8).
(b) If a licensee or registrant permits members of the public to have access to controlled areas, the limits under par. (a) 1. for members of the public continue to apply to those individuals.
(c) A licensee or a registrant or an applicant for a license or registration may apply for prior department authorization to operate up to an annual dose limit for an individual member of the public of 5 mSv (500 mrem). The application shall include all the following information:
1. Demonstration of the need for and the expected duration of operations exceeding the limit in par. (a).
2. A licensee's or registrant's program to assess and control dose within the 5 mSv (500 mrem) annual limit.
3. The procedures to be followed to maintain the dose ALARA.
(d) In addition to the requirements of this section, a licensee or registrant subject to the provisions of the U.S. environmental protection agency's generally applicable environmental radiation standards in 40 CFR 190 shall comply with those standards.
(e) The department may impose additional restrictions on radiation levels in unrestricted areas and on the total quantity of radionuclides that a licensee or registrant may release in effluents to restrict the collective dose.
(f) A licensee or registrant may permit visitors to individuals who cannot be released under s. DHS 157.62 (8). A visitor may receive a radiation dose greater than one mSv (100 mrem) if both of the following conditions are met:
1. The radiation dose received by the visitor does not exceed 5 mSv (0.5 rem).
2. The authorized user has predetermined that the visit is appropriate.
(2) COMPLIANCE WITH DOSE LIMITS FOR INDIVIDUAL MEMBERS OF THE PUBLIC.
(a) A licensee or registrant shall make or cause to be made, as appropriate, surveys of radiation levels in unrestricted and controlled areas and radioactive materials in effluents released to unrestricted and controlled areas to demonstrate compliance with the dose limits for individual members of the public in sub. (1).
(b) A licensee or registrant shall show compliance with the annual dose limit in sub. (1) by either of the following means:
1. Demonstrating by measurement or calculation that the total ffective dose equivalent to the individual likely to receive the highest dose from the licensed or registered operation does not exceed the annual dose limit.
2. Demonstrating both of the following:
a. The annual average concentrations of radioactive material released in gaseous and liquid effluents at the boundary of the unrestricted area do not exceed the values specified in Table II of Appendix E.
b. If an individual were continuously present in an unrestricted area, the dose from external sources would not exceed
0.02 mSv (2 mrem) in an hour and 0.5 mSv (50 mrem) in a yea r.
(c) Upon approval from the department, a licensee or registrant may adjust the effluent concentration values in Table II of Appendix E for members of the public to take into account the actual physical and chemical characteristics of the effluents, such as aerosol size distribution, solubility, density and chemical form.
History: CR 01−108: cr. Register July 2002 No. 559, eff. 8−1−02.

DHS 157.24 Testing for leakage or contamination of sealed sources.

(1) GENERAL REQUIREMENTS. A licensee or registrant in possession of any sealed source shall ensure that all of the following requirements are met:
(a) Each sealed source, other than hydrogen−3, with a half−life of 30 days or more and in any form other than gas or seeds of iridium− 192 encased in nylon ribbon, shall be tested for leakage or contamination as follows:
1. Prior to initial use.
2. Unless otherwise authorized by the department, the NRC or another agreement state, at intervals not to exceed 6 months, except that each source designed to emit alpha particles shall be tested at intervals not to exceed 3 months.

Unofficial Text (See Printed Volume). Current through date and Register shown on Title Page.

3. At any time there is reason to suspect that a sealed source might have been damaged or might be leaking, it shall be tested for leakage before further use.
4. In the absence of a certificate from a transferor indicating that a test for leakage has been made within 6 months prior to the transfer, the sealed source may not be put into use until tested and the results received.
(b) Notwithstanding the provisions of par. (a), sources not in use and identified as being in storage shall meet all the following conditions:
1. Sources other than brachytherapy or teletherapy sources shall be tested for leakage at intervals not to exceed 5 years.
2. Sources shall be tested for leakage and test results received prior any use or transfer, unless a test for leakage has been made within 6 months prior to the date of use or transfer.
3. Sources in storage shall be inventoried at intervals not to exceed 6 months.
(c) Tests for leakage for all sealed sources, except brachytherapy sources manufactured to contain radium, shall be capable of detecting the presence of 185 Bq (0.005 μCi) of radioactive material on a test sample. Test samples shall be taken from the sealed source or from the surfaces of the container in which the sealed source is stored or mounted on which one might expect contamination to accumulate. For a sealed source contained in a device, test samples shall be obtained when the source is in the "off" position.
(d) Tests for leakage for brachytherapy sources manufactured to contain radium shall be capable of detecting an absolute leakage rate of 37 Bq (0.001 μCi) of radon−222 in a 24 hour period when the collection efficiency for radon−222 and its progeny has been determined with respect to collection method, volume and time.
(e) Test samples shall be taken from the interior surfaces of the container in which sealed sources of radium are stored. The test shall be capable of detecting the presence of 185 Bq (0.005 μCi) of a radium daughter that has a half−life greater than 4 days.
(2) EXEMPTIONS. Notwithstanding the requirements in sub.(1), any sealed source is exempt from tests for leakage when the sealed source contains 3.7 MBq (100 μCi) or less of beta− or gamma− emitting material or 0.37 MBq (10 μCi) or less of alpha−emitting material.
(3) AUTHORIZATION TO CONDUCT TESTING. Tests for leakage or contamination from sealed sources shall be performed by persons specifically authorized by the department, an agreement state, a licensing state or the NRC to perform the services.
(4) RECORDS. Records of test results for sealed sources shall be made under s. DHS 157.31 (4).
(5) LEAKAGE CRITERIA. Any of the following shall be considered evidence that a sealed source is leaking:
(a) The presence of 185 Bq (0.005 μCi) or more of removable contamination on any test sample.
(b) Leakage of 37 Bq (0.001 μCi) of radon−222 per 24 hours for sources manufactured to contain radium.
(c) The presence of removable contamination resulting from the decay of 185 Bq (0.005 μCi) or more of radium.
(6) ACTION REQUIRED DUE TO A LEAKING SOURCE. A licensee or registrant shall immediately withdraw a leaking sealed source from use and shall take action to prevent the spread of contamination. The leaking sealed source shall be repaired or disposed of under the requirements of this chapter.
(7) REPORTS. Reports of test results for leaking or contaminated sealed sources shall be prepared under s. DHS 157.32 (7) and retained for 3 years after disposal or repair of the source. **History:** CR 01−108: cr. Register July 2002 No. 559, eff. 8−1−02.

DHS 157.25 Surveys and monitoring. (1) GENERAL REQUIREMENTS.
(a) A licensee or registrant shall make or cause to be made all the following surveys:
1. Surveys necessary for the licensee or registrant to comply with this subchapter.
2. Surveys necessary and reasonable under the circumstances to evaluate any of the following:
a. Radiation levels.
b. Concentrations or quantities of radioactive material.
c. The potential radiological hazards.
(b) A licensee or registrant shall ensure that instruments and equipment used for quantitative radiation measurements, including dose rate and effluent monitoring, are calibrated at intervals not to exceed 12 months for the radiation measured, except when a more frequent interval is specified elsewhere in this chapter or in a license condition.

Unofficial Text (See Printed Volume). Current through date and Register shown on Title Page.

(c) All personnel dosimeters, except for direct and indirect reading pocket ionization chambers and those dosimeters used to measure the dose to any extremity, that require processing to determine the radiation dose and that are used by licensees and registrants to comply with s. DHS 157.22 (1), with other applicable provisions of this chapter or with conditions specified in a license or registration shall be processed and evaluated by a dosimetry processor that meets both of the following conditions:
1. Holds current personnel dosimetry accreditation from the national voluntary laboratory accreditation program of the
national institute of standards and technology.
2. Is approved in this accreditation process for the type of radiation or radiations included in the national voluntary laboratory accreditation program that most closely approximates the type of radiation or radiations for which the individual wearing the dosimeter is monitored.
(2) CONDITIONS REQUIRING INDIVIDUAL MONITORING OF EXTERNAL AND INTERNAL OCCUPATIONAL DOSE. A licensee or registrant shall monitor exposures from sources of radiation at levels sufficient to demonstrate compliance with the occupational dose limits of this subchapter. Monitoring devices may be changed quarterly, provided the assignee has not exceeded 10% of the occupational limits in s. DHS 157.22 (1) (a). If the assignee exceeds 10% of the occupational limits, the monitoring device shall be changed monthly. As a minimum, a licensee or registrant shall do all the following:
(a) Monitor occupational exposure to radiation sources under their control and supply and require the use of individual monitoring devices by all of the following:
1. Adults likely to receive, in one year from sources external to the body, a dose in excess of 10% of the limits in s. DHS 157.22 (1) (a). Monitoring devices shall be individually assigned and not shared.
2. Minors likely to receive in one year, from radiation sources external to the body, a deep−dose equivalent in excess of 1.0 mSv (0.1 rem), a lens−dose equivalent in excess of 1.5 mSv (0.15 rem), or a shallow−dose equivalent to the skin or to the extremities in excess of 5 mSv (0.5 rem).
3. A declared pregnant woman likely to receive, in one year from sources external to the body, a dose in excess of one mSv (0.1 rem).
4. An individual entering a high or very high radiation area.
5. An individual working within 6 feet of operating medical fluoroscopic equipment.
~~6. Individuals operating portable moisture or density measuring devices.~~
(b) Monitor, to determine compliance with s. DHS 157.22 (4), the occupational intake of radioactive material by and assess the committed effective dose equivalent to all of the following individuals:
1. Adults likely to receive, in one year, an intake in excess of 10% of the applicable ALI in Table I, Columns 1 and 2, of Appendix E.
2. Minors likely to receive, in one year, a committed effective dose equivalent in excess of 1.0 mSv (100 mrem).
3. Declared pregnant women likely to receive, during the entire pregnancy, a committed dose equivalent in excess of 1.0 mSv (100 mrem).
(3) LOCATION OF INDIVIDUAL MONITORING DEVICES. A licensee or registrant shall ensure that individuals who are required to monitor occupational doses under sub. (2) wear individual monitoring devices as follows:
(a) An individual monitoring device used for monitoring the dose to the whole body shall be worn at the unshielded location of the whole body likely to receive the highest exposure.
(b) If a protective apron is worn, the individual monitoring device shall be located at the neck, which is the collar. If a second monitoring device is used, for the same purpose, it shall be located under the protective apron at the waist. The estimated effective dose equivalent (*HE*) when wearing 2 monitoring devices, one located outside and one under a protective apron, shall be calculated using the following formula: *HE* (estimate) = 1.5 *HW* + 0.04 *HN* where *HW* = badge reading from the waist badge under the apron and *HN* = badge reading from the neck badge worn outside the apron.
(c) An individual monitoring device used for monitoring the dose to an embryo or fetus of a declared pregnant woman, under s. DHS 157.22 (8) (a), shall be located at the waist under any protective apron being worn by the woman.
(d) An individual monitoring device used for monitoring the lens dose equivalent, to demonstrate compliance with s. DHS 157.22 (1) (a) 2. a., shall be located at the neck or collar, outside any protective apron being worn by the monitored individual or at an unshielded location closer to the eye.

Unofficial Text (See Printed Volume). Current through date and Register shown on Title Page.

(e) An individual monitoring device used for monitoring the dose to the extremities, to demonstrate compliance with s. DHS 157.22 (1) (a) 2. b., shall be worn on the extremity likely to receive the highest exposure. Each individual monitoring device shall be oriented to measure the highest dose to the extremity being monitored.

History: CR 01−108: cr. Register July 2002 No. 559, eff. 8−1−02; correction in (2) (a) 2. made under s. 13.93 (2m) (b) 7., Stats., Register July 2002 No. 559; **CR 06−021: r. and recr. (2) (a) 2., Register October 2006 No. 610, eff. 11−1−06.**

DHS 157.26 Control of exposure from external sources in restricted areas.

(1) CONTROL OF ACCESS TO HIGH RADIATION AREAS. (a) A licensee or registrant shall ensure that each entrance or access point to a high radiation area has one or more of the following features:

1. A control device that, upon entry into the area, causes the level of radiation to be reduced below that level at which an individual might receive a deep dose equivalent of one mSv (100 mrem) in one hour at 30 centimeters from the source of radiation or from any surface that the radiation penetrates.
2. A control device that energizes a conspicuous visible or audible alarm signal so that the individual entering the high radiation area and the supervisor of the area are made aware of the entry.
3. Entryways that are locked, except during periods when access to the areas is required, with control over each individual entry.

(b) In place of the controls required under par. (a) for a high radiation area, a licensee or registrant may substitute continuous direct or electronic surveillance that is capable of preventing unauthorized entry.

(c) A licensee or registrant may apply to the department for approval of alternative methods for controlling access to high radiation areas.

(d) A licensee or registrant shall establish the controls required under par. (a) 1. and 3. in a way that does not prevent individuals from leaving a high radiation area.

(e) A licensee or registrant is not required to control each entrance or access point to a room or other area that is a high radiation area solely because of the presence of radioactive materials prepared for transport and packaged and labeled under the regulations of the U.S. department of transportation provided that all of the following conditions are met:

1. The packages do not remain in the area longer than 3 days.
2. The dose rate at one meter from the external surface of any package does not exceed 0.1 mSv (10 mrem) per hour.

(f) A licensee or registrant is not required to control entrance or access to rooms or other areas in hospitals solely because of the presence of patients containing radioactive material, provided there are personnel in attendance who are taking the necessary precautions to prevent the exposure of individuals to radiation or radioactive material in excess of the established limits in this subchapter and to operate within the ALARA provisions of the licensee's or registrant's radiation protection program.

(g) A registrant is not required to control entrance or access to rooms or other areas containing sources of radiation capable of producing a high radiation area if the registrant has met all the specific requirements for access and control specified in other applicable parts of this chapter, such as subch. IV for industrial radiography and subch. VIII for x−rays in the healing arts and accelerators.

(2) CONTROL OF ACCESS TO VERY HIGH RADIATION AREAS.

(a) In addition to the requirements in sub. (1), a licensee or registrant shall institute measures to ensure that an individual is not able to gain unauthorized or inadvertent access to areas in which radiation levels could be encountered at 5 Gy (500 rad) or more in one hour at one meter from a source of radiation or any surface through which the radiation penetrates. This requirement does not apply to rooms or areas in which diagnostic x−ray systems are the only source of radiation or to non−self−shielded irradiators.

(b) A licensee or registrant is not required to control entrance or access to rooms or other areas containing sources of radiation capable of producing a very high radiation area as described in par. (a) if the licensee or registrant has met all the specific requirements for access and control specified in other applicable parts of this chapter, such as subch. IV for industrial radiography and subch. VIII for x−rays in the healing arts and accelerators.

History: CR 01−108: cr. Register July 2002 No. 559, eff. 8−1−02.

DHS 157.27 Respiratory protection and controls to restrict internal exposure in restricted areas.

(1) USE OF PROCESS OR OTHER ENGINEERING CONTROLS. A licensee or registrant shall use, to the extent practical, process or other engineering controls, such as containment, decontamination or ventilation, to control the concentrations of radioactive material in air.

Unofficial Text (See Printed Volume). Current through date and Register shown on Title Page.

(2) USE OF OTHER CONTROLS. (a) When it is not practical to apply process or other engineering controls to control the concentrations of radioactive material in air to values below those that define an airborne radioactivity area, a licensee or registrant shall increase monitoring and limit intakes by one or more of the following means:
1. Control of access.
2. Limitation of exposure times.
3. Use of respiratory protection equipment.
4. Other controls.
(b) If a licensee or registrant performs an ALARA analysis to determine whether or not respirators should be used, a licensee or registrant may also consider the impact of respirator use on workers' industrial health and safety.
(3) USE OF INDIVIDUAL RESPIRATORY PROTECTION EQUIPMENT. (a) If a licensee or registrant uses respiratory protection equipment to limit intakes under sub. (2), all of the following criteria shall apply:
1. Except as provided in subd. 2., a licensee or registrant shall use only respiratory protection equipment that is tested and certified by the U.S. national institute for occupational safety and health.
2. A licensee or registrant may use equipment that has not been tested or certified by the U.S. national institute for occupational safety or for which there is no schedule for testing or certification, provided the licensee or registrant has submitted to the department and the department has approved a request for authorized use of that equipment. The request shall include documentation of a demonstration by testing, or a demonstration on the basis of test information, that the material and performance characteristics of the equipment are capable of providing the proposed degree of protection under anticipated conditions of use.
3. A licensee or registrant shall implement and maintain a respiratory protection program that includes all of the following:
a. Air sampling sufficient to identify the potential hazard, permit proper equipment selection and estimate doses.
b. Surveys and bioassays, as necessary, to evaluate actual intakes.
c. Testing of respirators for operability immediately prior to each use.
4. A licensee or registrant shall have written procedures regarding all of the following:
a. Monitoring, including air sampling and bioassays.
b. Supervision and training of respirator users.
c. Fit testing.
d. Respirator selection.
e. Breathing air quality.
f. Inventory and control.
g. Storage, issuance, maintenance, repair, testing and quality assurance of respiratory protection equipment.
h. Record keeping of all items in this subd. par.
i. Limitations on periods of respirator use and relief from respirator use.
5. Prior to initial fitting of respirators, and at least every 12 months thereafter, a physician shall determine that the individual user is physically able to use the respiratory protection equipment.
6. Fit testing, with a fit factor >/= 10 times the assigned protection factor for negative pressure devices, and a fit factor >/= 500 for any positive pressure, continuous flow, and pressure−demand devices, before the first field use of tight fitting, face−sealing respirators and periodically thereafter at a frequency not to exceed one year. Fit testing shall be performed with the facepiece operating in the negative pressure mode.
(b) A licensee shall advise each respirator user that the user may leave the area at any time for relief from respirator use in the event of equipment malfunction, physical or psychological distress, procedural or communication failure, significant deterioration of operating conditions, or any other conditions that might require such relief.
(c) A licensee shall also consider limitations appropriate to the type and mode of use. When selecting respiratory devices the licensee shall provide for vision correction, adequate communication, low temperature work environments, and the concurrent use of other safety or radiological protection equipment. The licensee shall use equipment in such a way as not to interfere with the proper operation of the respirator.
(d) Standby rescue persons are required whenever one−piece atmosphere−supplying suits, or any combination of supplied air respiratory protection device and personnel protective equipment are used from

Unofficial Text (See Printed Volume). Current through date and Register shown on Title Page.

which an unaided individual would have difficulty extricating himself or herself. The standby persons shall be equipped with respiratory protection devices or other apparatus appropriate for the potential hazards. The standby rescue persons shall observe or otherwise maintain continuous communication with the workers via visual, voice, signal line, telephone, radio, or other suitable means, and be immediately available to assist them in case of a failure of the air supply or for any other reason that requires relief from distress. A sufficient number of standby rescue persons shall be immediately available to assist all users of this type of equipment and to provide effective emergency rescue if needed.

Note: Examples of means of continuous communication are visual, voice, signal line, telephone, radio or other suitable means.

(e) Atmosphere−supplying respirators shall be supplied with respirable air that meets the following requirements:

1. Oxygen content of 19.5−23.5 percent.
2. Condensed hydrocarbon content of 5 milligrams per cubic meter of air or less.
3. Carbon monoxide content of 10 ppm or less.
4. Carbon dioxide content of 1,000 ppm or less.
5. Lack of noticeable odor.

(f) A licensee or registrant shall ensure that no objects, materials or substances, such as facial hair, or any conditions that interfere with the face to facepiece seal or valve function, and that are under the control of the respirator wearer, are present between the skin of the wearer's face and the sealing surface of a tight−fitting respirator facepiece.

(g) In estimating the dose to individuals from intake of airborne radioactive materials, the concentration of radioactive material in the air that is inhaled when respirators are worn is initially assumed to be the ambient concentration in air without respiratory protection, divided by the assigned protection factor. If the dose is later found to be greater than the estimated dose, the corrected value must be used. If the dose is later found to be less than the estimated dose, the corrected value may be used.

(4) APPLICATION FOR USE OF HIGHER ASSIGNED PROTECTION FACTORS.

(a) A licensee or registrant shall obtain authorization from the department before using assigned protection factors in excess of those specified in Appendix D.

(b) The department may authorize a licensee or registrant to use higher assigned protection factors on receipt of an application that meets the following criteria:

1. Describes the situation for which a need exists for higher protection factors.
2. Demonstrates that the respiratory protection equipment provides these higher protection factors under the proposed conditions of use.

History: CR 01−108: cr. Register July 2002 No. 559, eff. 8−1−02.

DHS 157.28 Storage and control of licensed or registered sources of radiation.

(1) SECURITY AND CONTROL OF LICENSED OR REGISTERED RADIOACTIVE MATERIAL.

(a) *Security of stored radioactive material.* A licensee or registrant shall secure licensed or registered radioactive material that is stored in an unrestricted area from unauthorized removal or access.

(b) *Control of radioactive material not in storage.* A licensee or registrant shall maintain constant surveillance, or use devices or administrative procedures, to prevent unauthorized use of licensed or registered radioactive material that is in an unrestricted area and that is not in storage.

(2) SECURITY AND CONTROL OF REGISTERED RADIATION MACHINES.

(a) A registrant shall secure registered radiation machines from unauthorized removal.

(b) A registrant shall use devices or administrative procedures to prevent unauthorized use of registered radiation machines.

History: CR 01−108: cr. Register July 2002 No. 559, eff. 8−1−02; **CR 06−021:am. (1) (a) Register October 2006 No. 610, eff. 11−1−06.**

DHS 157.29 Precautionary procedures.

(1) CAUTION SIGNS. (a) *Standard radiation symbol.* Unless otherwise authorized by the department, the standard radiation symbol shall use the colors magenta, purple or black on a yellow background and shall be the 3−bladed design depicted in Figure DHS 157.29.

Unofficial Text (See Printed Volume). Current through date and Register shown on Title Page.

Figure DHS 157.29. Radiation Symbol

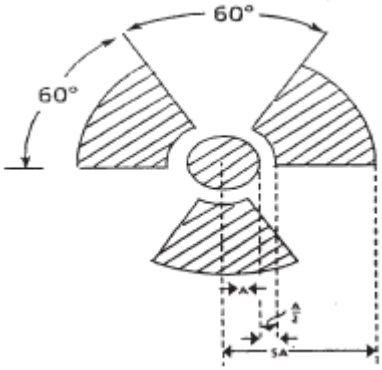

1. Cross−hatched area is to be magenta, purple or black.
2. The background is to be yellow.

(b) *Exception to color requirements for standard radiation symbol.* Notwithstanding the requirements of par. (a), a licensee or registrant is authorized to label sources, source holders or device components containing sources of radiation that are subjected to high temperatures with conspicuously etched or stamped radiation caution symbols and without a color requirement.

(c) *Additional information on signs and labels.* In addition to the contents of signs and labels prescribed in this section, a licensee or registrant may provide, on or near the required signs and labels, additional information, as appropriate, to make individuals aware of potential radiation exposures and to minimize the exposures.

(2) POSTING REQUIREMENTS. (a) *Posting of radiation areas.*A licensee or registrant shall post a conspicuous sign or signs bearing the radiation symbol and the words “CAUTION, RADIATION AREA” in each radiation area.

(b) *Posting of high radiation areas.* A licensee or registrant shall post a conspicuous sign or signs bearing the radiation symbol and the words “CAUTION, HIGH RADIATION AREA” or “DANGER, HIGH RADIATION AREA” in each high radiation area.

(c) *Posting of very high radiation areas.* A licensee or registrant shall post a conspicuous sign or signs bearing the radiation symbol and the words “EXTREME DANGER, VERY HIGH RADIATION AREA” or “GRAVE DANGER, VERY HIGH RADIATION AREA” in each very high radiation area.

(d) *Posting of airborne radioactivity areas.* A licensee or registrant shall post a conspicuous sign or signs bearing the radiation symbol and the words “CAUTION, AIRBORNE RADIOACTIVITY AREA” or “DANGER, AIRBORNE RADIOACTIVITY AREA” in each airborne radioactivity area.

(e) *Posting of areas or rooms in which licensed or registered material is used or stored.* A licensee or registrant shall post a conspicuous sign or signs bearing the radiation symbol and the words “CAUTION, RADIOACTIVE MATERIAL(S)” or “DANGER, RADIOACTIVE MATERIAL(S)” in each area or room in which there is used or stored an amount of licensed or registered material exceeding 10 times the quantity of the material specified in Appendix F.

(3) EXCEPTIONS TO POSTING REQUIREMENTS. (a) A licensee or registrant is not required to post caution signs in areas or rooms containing sources of radiation for periods of less than 8 hours if all of the following conditions are met:

1. The sources of radiation are constantly attended during these periods by an individual who takes the precautions necessary to prevent the exposure of individuals to sources of radiation in excess of the limits established in this subchapter.2. The area or room is subject to the licensee’s or registrant’s control.

(b) Rooms or other areas in hospitals that are occupied by patients are not required to be posted with caution signs under sub. (2) provided that the requirements of s. DHS 157.64 (2) (a) or 157.65 (4) (a) are met.

(c) Rooms or other areas in hospitals that are occupied by patients are not required to be posted with caution signs, provided that no member of the public could receive a deep dose equivalent in excess of 5 mSv (500 mrem) from entering the room during the patient’s stay.

Unofficial Text (See Printed Volume). Current through date and Register shown on Title Page.

(d) A room or area is not required to be posted with a caution sign because of the presence of a sealed source provided the radiation level at 30 centimeters from the surface of the sealed source container or housing does not exceed 0.05 mSv (5 mrem) per hour.
(e) A room or area is not required to be posted with a caution sign because of the presence of radiation machines used solely for diagnosis in the healing arts.
(4) LABELING CONTAINERS AND RADIATION MACHINES. (a) A licensee or registrant shall ensure that each container of licensed or registered material bears a durable, clearly visible label bearing the radiation symbol and the words "CAUTION, RADIOACTIVE MATERIAL" or "DANGER, RADIOACTIVE MATERIAL." The label shall also provide information, such as the radionuclides present, an estimate of the quantity of radioactivity, the date for which the activity is estimated, radiation levels, kinds of materials and mass enrichment, to permit individuals handling or using the containers or working in the vicinity of the containers to take precautions to avoid or minimize exposures.
Note: Mass enrichment is a process used to increase the percentage of the isotope U−235 present in refined uranium. The amount of U−235 present is expressed in percent enrichment on the label.
(b) A licensee or registrant shall, prior to removal or disposal of empty uncontaminated containers to unrestricted areas, remove or deface the radioactive material label or otherwise clearly indicate that the container no longer contains radioactive materials.
(c) A registrant shall ensure that each radiation machine is conspicuously labeled cautioning individuals that radiation is produced when it is energized.
(5) EXEMPTIONS TO LABELING REQUIREMENTS. A licensee or registrant is not required to label any of the following:
(a) Containers holding licensed or registered material in quantities less than the quantities listed in Appendix F.
(b) Containers holding licensed or registered material in concentrations less than those specified in Table III of Appendix E.
(c) Containers attended by an individual who takes the precautions necessary to prevent the exposure of individuals in excess of the limits established by this subchapter.
(d) Containers in transport and packaged and labeled under the regulations of the U.S. department of transportation.
Note: Labeling of packages containing radioactive materials is required by the U.S. Department of Transportation if the amount and type of radioactive materials exceeds the limits for an excepted quantity or article as defined and limited by U.S. Department of Transportation regulations 49 CFR 173.403 (m) and (w) and 173.421 to 173.424.
(e) Containers that are accessible only to individuals authorized to handle or use them, or to work in the vicinity of the containers, if the contents are identified to these individuals by a readily available written record. The record shall be retained as long as the containers are in use for the purpose indicated on the record.
Note: Examples of the type of containers in par. (e) are containers in locations such as water−filled canals or storage vaults.
(f) Installed manufacturing or process equipment, such as piping and tanks.
(6) PROCEDURES FOR RECEIVING AND OPENING PACKAGES. (a) A licensee or registrant who expects to receive a package containing quantities of radioactive material in excess of a type A quantity shall make arrangements to receive the package under either of the following conditions:
1. When the carrier offers it for delivery.
2. Upon notification of the arrival of the package at the carrier's terminal and possession of the package is taken expeditiously.
(b) A licensee or registrant shall do all the following:
1. Monitor the external surfaces of a labeled package for radioactive contamination unless the package contains only radioactive material in the form of gas or in special form as defined in subch. I.
2. Monitor the external surfaces of a labeled package for radiation levels unless the package contains quantities of radioactive material that are less than or equal to the type A quantity.
3. Monitor all packages known to contain radioactive material for radioactive contamination and radiation levels if there is evidence of degradation of package integrity, such as packages that are crushed, wet or damaged.
(c) In par. (b), "labeled" means displaying a Radioactive White I, Yellow II, or Yellow III label as specified in U.S. department of transportation regulations 49 CFR 172.403 and 172.436 to 172.440.
(d) A licensee or registrant shall perform the monitoring required by par. (b) as soon as practicable after receipt of the package, but not later than 3 hours after the package is received at the licensee's or registrant's facility if it is received during the licensee's or registrant's normal working hours or if there is

Unofficial Text (See Printed Volume). Current through date and Register shown on Title Page.

evidence of degradation of package integrity, such as a package that is crushed, wet or damaged. If a package is received after working hours and has no evidence of degradation of package integrity, the package shall be monitored no later than 3 hours from the beginning of the next working day.

(e) A licensee or registrant shall immediately notify the final delivery carrier and, by telephone and either telegram or facsimile, the department under either of the following conditions:

1. Removable radioactive surface contamination exceeds the limits of s. ~~DHS 157.94 (1) (h)~~ DHS 157.94 (1) (i).

2. External radiation levels exceed the limits of s. DHS 157.9 (1) (j).

Note: The Department may be reached during normal business hours of 7:45 am to 4:30 pm, Monday through Friday, except state holidays, at 608−267−4797. The facsimile transmission number is 608−267−3695.

(f) A licensee or registrant shall do all the following:

1. Establish, maintain and retain written procedures for safely opening packages in which radioactive material is received.

2. Ensure that the procedures are followed and that due consideration is given to special instructions for the type of package being opened.

(g) A licensee or registrant transferring special form sources in vehicles owned or operated by the licensee or registrant to and from a work site is exempt from the contamination monitoring requirements of par. (b), but is not exempt from the monitoring requirement in par. (b) for measuring radiation levels that ensures that the source is still properly lodged in its shield.

History: CR 01−108: cr. Register July 2002 No. 559, eff. 8−1−02; **CR 06−021: am. (6) (e) 2. Register October 2006 No. 610, eff. 11−1−06**.

DHS 157.30 Waste management. (1) GENERAL REQUIREMENTS.

(a) A licensee or registrant disposing of licensed or registered material may use any of the following methods:

1. Transfer to an authorized recipient as provided in sub.(6) or in subch. II, or to the U.S. department of energy.

2. Decay while in storage.

3. Release in effluents within the limits in s. DHS 157.23 (1).

4. Dispose of as authorized under sub. (2), (3), (4), ~~or~~ (5) or (8).

(b) A person shall be specifically licensed or registered to receive waste containing licensed or registered material from other persons for any of the following:

1. Treatment prior to disposal.

2. Treatment or disposal by incineration.

3. Decay while in storage.

4. Disposal at a land disposal facility authorized to receive radioactive waste.

5. Storage until transferred to a storage or disposal facility authorized to receive the waste.

(2) METHOD FOR OBTAINING APPROVAL OF PROPOSED DISPOSAL PROCEDURES. A licensee or registrant or applicant for a license or registration may apply to the department for approval of proposed procedures, not otherwise authorized in this chapter, to dispose of licensed or registered material generated in the licensee's or registrant's operations. Each application shall be in writing and shall include all of the following:

(a) A description of the waste containing licensed or registered material to be disposed of, including the physical and chemical properties that have an effect on risk evaluation and the proposed manner and conditions of waste disposal.

(b) An analysis and evaluation of information on the nature of the environment.

(c) The nature and location of other potentially affected facilities.

(d) Analyses and procedures to ensure that doses are maintained ALARA and within the dose limits in this chapter.

(3) DISPOSAL BY RELEASE INTO SANITARY SEWERAGE. (a) A licensee or registrant may discharge licensed or registered material into sanitary sewerage if each of the following conditions is satisfied:

1. The material is readily soluble, or is readily dispersible biological material, in water.

2. The quantity of licensed or registered radioactive material that the licensee or registrant releases into the sewer in one month divided by the average monthly volume of water released into the sewer by the licensee or registrant does not exceed the concentration listed in Table III of Appendix E.

3. If more than one radionuclide is released, all the following conditions shall also be satisfied:

Unofficial Text (See Printed Volume). Current through date and Register shown on Title Page.

a. A licensee or registrant shall determine the fraction of the limit in Table III of Appendix E represented by discharges into sanitary sewerage by dividing the actual monthly average concentration of each radionuclide released by the licensee or registrant into the sewer by the concentration of that radionuclide listed in Table III of Appendix E.
b. The sum of the fractions for each radionuclide required by subd. 3. a. does not exceed unity.
c. The total quantity of licensed or registered radioactive material that the licensee or registrant releases into the sanitary sewerage in a year does not exceed 185 GBq (5 Ci) of hydrogen−3, 37 GBq (1 Ci) of carbon−14 and 37 GBq (1 Ci) of all other radioactive materials combined.
(b) Excreta from individuals undergoing medical diagnosis or therapy with radioactive material are not subject to the limitations contained in par. (a).
(4) TREATMENT OR DISPOSAL BY INCINERATION. A licensee or registrant may treat or dispose of licensed or registered material by incineration only in the form and concentration specified in sub. (5) or as specifically approved by the department under sub. (2).
(5) DISPOSAL OF SPECIFIC WASTES. (a) A licensee or registrant may dispose of all of the following licensed or registered material as if the material were not radioactive:
1. 1.85 kBq (0.05 µCi) or less of hydrogen−3, iodine−125 or carbon−14 per gram of medium used for liquid scintillation counting.
2. 1.85 kBq (0.05 µCi) or less of hydrogen−3, iodine−125 or carbon−14 per gram of animal tissue, averaged over the weight of the entire animal.
(b) A licensee or registrant may not dispose of tissue under par. (a) 2. in a manner that would permit its use either as food for humans or as animal feed.
(c) A licensee or registrant shall maintain records under s. DHS 157.31 (9).
(6) TRANSFER FOR DISPOSAL AND MANIFESTS. (a) The requirements of this subsection and Appendix G are designed to control transfers of low−level radioactive waste by any waste generator, waste collector or waste processor licensee who ships low level waste either directly, or indirectly through a waste collector or waste processor, to a licensed low level waste land disposal facility; establish a shipping manifest tracking system and supplement existing requirements concerning transfers and record keeping for those wastes.
(b) Any licensee shipping radioactive waste or byproduct material as defined in DHS 157.03 (50) (c) to (e) intended for ultimate disposal at a licensed land disposal facility shall document the information required in Appendix G, Section I and transfer this recorded information to the intended consignee in accordance with the requirements of Appendix G.
(c) Each shipment manifest shall include a certification by the waste generator as specified in Appendix G, Section II.
(d) Each person involved in the transfer of waste for disposal or in the disposal of waste, including the waste generator, waste collector, waste processor and disposal facility operator, shall comply with the requirements specified in Appendix G, Section III.
(7) COMPLIANCE WITH ENVIRONMENTAL AND HEALTH PROTECTION REGULATIONS. Nothing in subs. (1) to (6) relieves a licensee or registrant from complying with other applicable federal, state and local regulations governing any other toxic or hazardous properties of materials that may be disposed of according to subs. (1) to (6).
(8) DISPOSAL OF CERTAIN BYPRODUCT MATERIAL. (a) Licensed byproduct material as defined in DHS 157.03 (50) (c) to (e) may be disposed of under 10 CFR 61 or equivalent agreement state regulations, even though it is not defined as low level radioactive waste. Any licensed byproduct material being disposed of at a facility, or transferred for ultimate disposal at a facility licensed by the NRC under 10 CFR 61 or an agreement state with equivalent regulations shall meet the requirements of 10 CFR 20.2006.
(b) A licensee may dispose of byproduct material as defined in DHS 157.03 (50) (c) to (e) at a disposal facility authorized to dispose of such material under federal or state solid or hazardous waste law, including the Solid Waste Disposal Act, as authorized under the Energy Policy Act of 2005.
History: CR 01−108: cr. Register July 2002 No. 559, eff. 8−1−02.

DHS 157.31 Records. (1) GENERAL PROVISIONS. (a) A licensee or registrant shall use the SI units becquerel, gray, sievert and coulomb per kilogram followed by the special units curie, rad, rem and roentgen, or the special units curie, rad, rem and roentgen, including multiples and subdivisions, and shall clearly indicate the units of all quantities on records required by this subchapter.

Unofficial Text (See Printed Volume). Current through date and Register shown on Title Page.

(b) A licensee or registrant shall make a clear distinction among the quantities entered on the records required by this subchapter, such as total effective dose equivalent, shallow dose equivalent, lens dose equivalent, deep dose equivalent or committed effective dose equivalent.

(2) RECORDS OF RADIATION PROTECTION PROGRAMS. (a) A licensee or registrant shall maintain records of the radiation protection program, including all of the following:

1. The provisions of the program.
2. Audits and other reviews of program content and implementation.

(b) A licensee or registrant shall retain the records required by par. (a) 1. until the department terminates each pertinent license or registration requiring the record. A licensee or registrant shall retain the records required by par. (a) 2. for 3 years after the record is made.

(3) RECORDS OF SURVEYS. (a) A licensee or registrant shall maintain records showing the results of surveys and calibrations required by ss. DHS 157.25 (1) and 157.29 (6). A licensee or registrant shall retain these records for 3 years after the record is made.

(b) A licensee or registrant shall retain each of the following records until the department terminates each pertinent license or registration requiring the record:

1. Records of the results of surveys to determine the dose from external sources of radiation used, in the absence of or in combination with individual monitoring data, in the assessment of individual dose equivalents.
2. Records of the results of measurements and calculations used to determine individual intakes of radioactive material and used in the assessment of internal dose.
3. Records showing the results of air sampling, surveys and bioassays required under s. DHS 157.27 (3) (a) 3. a. and b.
4. Records of the results of measurements and calculations used to evaluate the release of radioactive effluents to the environment.

(4) RECORDS OF TESTS FOR LEAKAGE OR CONTAMINATION OF SEALED SOURCES. Records of tests for leakage or contamination of sealed sources required by s. DHS 157.24 shall be kept in units of becquerel or microcurie and maintained for inspection by the department for 5 years after the records are created.

(5) RECORDS OF PRIOR OCCUPATIONAL DOSE. A licensee or registrant shall retain the records of prior occupational dose and exposure history as specified in s. DHS 157.22 (5) on the department's occupational radiation exposure form or equivalent until the department terminates each pertinent license or registration requiring this record. A licensee or registrant shall retain records used in preparing the occupational radiation exposure form or equivalent for 3 years after the record is created.

(6) RECORDS OF PLANNED SPECIAL EXPOSURES. (a) For each use of the provisions of s. DHS 157.22 (6) for planned special exposures, a licensee or registrant shall maintain records that describe all of the following:

1. The exceptional circumstances requiring the use of a planned special exposure.
2. The name of the management official who authorized the planned special exposure and a copy of the signed authorization.
3. What actions were necessary.
4. Why the actions were necessary.
5. What precautions were taken to assure that doses were maintained ALARA.
6. What individual and collective doses were expected to result.
7. The doses actually received in the planned special exposure.

(b) A licensee or registrant shall retain the records until the department terminates each pertinent license or registration requiring these records.

(7) RECORDS OF INDIVIDUAL MONITORING RESULTS. (a) A licensee or registrant shall maintain records of doses received by all individuals for whom monitoring is required under s. DHS 157.25 (2) and records of doses received during planned special exposures, accidents and emergency conditions. Assessments of dose equivalent and records made using units in effect before August 1, 2002, need not be changed. These records shall include all of the following, when applicable: 1. The deep dose equivalent to the whole body, lens dose equivalent, shallow dose equivalent to the skin and shallow dose equivalent to the extremities.

2. The estimated intake of radionuclides.

Note: See DHS 157.22 (2) for occupational exposure limits.

Unofficial Text (See Printed Volume). Current through date and Register shown on Title Page.

3. The committed effective dose equivalent assigned to the intake of radionuclides.
4. The specific information used to calculate the committed effective dose equivalent under s. DHS 157.22 (4) (c).
5. The total effective dose equivalent when required by s.DHS 157.22 (2).
6. The total of the deep dose equivalent and the committed dose to the organ receiving the highest total dose.
(b) A licensee or registrant shall make entries of the records specified in par. (a) at intervals not to exceed one year.
(c) A licensee or registrant shall maintain the records specified in par. (a) on the department's record of individual monitoring results form, under the instructions for the form, or in clear and legible records containing all the information required by the department's record of individual monitoring results form.
Note: The form may be obtained by writing the Department at: Department of Health and Family Services, Radiation Protection Section, P.O. Box 2659, Madison WI 53701−2659; or by downloading from the Department website at: http://DHS.wisconsin. gov/dph_beh/RadiatioP/Index.htm.
(d) A licensee or registrant shall maintain the records of dose to an embryo or fetus with the records of dose to the declared pregnant woman. The declaration of pregnancy, including the estimated date of conception, shall also be kept on file, but may be maintained separately from the dose records.
(e) A licensee or registrant shall retain each required form or record under this subsection until the department terminates the pertinent license or registration requiring the record.
(f) Upon termination of the license or registration, a licensee or registrant shall permanently store individual monitoring records on the department's occupational radiation exposure form or equivalent.
(g) Individual exposure records required under this subsection shall be protected from public disclosure subject to the requirements of s. 153.50, Stats.
(8) RECORDS OF DOSE RECEIVED BY INDIVIDUAL MEMBERS OF THE PUBLIC. (a) A licensee or registrant shall maintain records sufficient to demonstrate compliance with the dose limit under s. DHS 157.23 (1) for individual members of the public.
(b) A licensee or registrant shall retain the records required by par. (a) until the department terminates each pertinent license or registration requiring the record.
(9) RECORDS OF WASTE DISPOSAL. (a) A licensee or registrant shall maintain records of the disposal of licensed or registered materials, including disposal authorized before August 1, 2002.
(b) A licensee or registrant shall retain the records required by par. (a) until the department terminates the pertinent license or registration requiring the record.
(10) RECORDS OF TESTING ENTRY CONTROL DEVICES FOR VERY HIGH RADIATION AREAS. (a) A licensee or registrant shall maintain records of tests on entry control devices for very high radiation areas. These records shall include the date, time and results of each test of function.
(b) A licensee or registrant shall retain the records required by par. (a) for 3 years after the record is made.
(11) FORM OF RECORDS. (a) Each record required by this section shall be legible throughout the specified retention period. Records, such as letters, drawings and specifications, shall include all pertinent information, such as stamps, initials and signatures. A licensee shall maintain adequate safeguards against tampering with and loss of records.
(b) Except as provided in par. (c), the record shall be the original or a reproduced copy or a microform, provided the copy or microform is authenticated by authorized personnel and the microform is capable of producing a clear copy throughout the required retention period.
(c) The record may be stored in electronic media with the capability for producing legible, accurate and complete records during the required retention period.
History: CR 01−108: cr. Register July 2002 No. 559, eff. 8−1−02; **CR 06−021: am. (1) (a) Register October 2006 No. 610, eff. 11−1−06**.

DHS 157.32 Reports. (1) REPORTS OF STOLEN, LOST OR MISSING LICENSED OR REGISTERED SOURCES OF RADIATION. (a) A licensee or registrant shall report to the department by telephone any of the following:
1. Immediately after its occurrence becomes known to a licensee or registrant, stolen, lost or missing licensed or registered radioactive material in an aggregate quantity equal to or greater than 1,000 times the quantity specified in Appendix F under circumstances that make it appear to the licensee or registrant that an exposure could result to individuals in unrestricted areas.
2. Within 30 days after its occurrence becomes known to a licensee or registrant, lost, stolen or missing licensed or registered radioactive material in an aggregate quantity greater than 10 times the quantity specified in Appendix F that is still missing.

Unofficial Text (See Printed Volume). Current through date and Register shown on Title Page.

3. Immediately after its occurrence becomes known to the registrant, a stolen, lost or missing radiation machine. **Note:** The Department may be reached during normal business hours of 7:45 am to 4:30 pm, Monday through Friday, except state holidays, at 608−267−4797 or other times at 608−258−0099.

(b) A licensee or registrant required to make a report under par. (a) shall, within 30 days after making a telephone report, make a written report to the department setting forth all the following information:

1. A description of the licensed or registered source of radiation involved, including, for radioactive material, the kind, quantity and chemical and physical form; and, for radiation machines, the manufacturer, model and serial number, type and maximum energy of radiation emitted.

2. A description of the circumstances under which the loss or theft occurred.

3. A statement of the disposition or probable disposition of the licensed or registered source of radiation involved.

4. Exposures of individuals to radiation, circumstances under which the exposures occurred and the possible total effective dose equivalent to persons in unrestricted areas.

5. Actions that have been taken or will be taken to recover the source of radiation.

6. Procedures or measures that have been or will be adopted to ensure against a recurrence of the loss or theft of licensed or registered sources of radiation.

(c) Subsequent to filing the written report, the licensee or registrant shall report any additional substantive information on the loss or theft within 30 days after the licensee or registrant learns of the information.

(d) On any report filed with the department under this subsection, a licensee or registrant shall record the names of individuals who may have received exposure to radiation in a separate and detachable portion of the report.

Note: Reports should be sent to the Department at the following address: Department of Health and Family Services, Radiation Protection Section, PO Box 2659, Madison WI 53701−2659.

(2) NOTIFICATION OF RADIATION INCIDENTS. (a) Notwithstanding other requirements for notification, a licensee or registrant shall immediately report to the department each event involving a source of radiation possessed by the licensee or registrant that may have caused or threatens to cause any of the following conditions:

1. An individual to receive any of the following:

a. A total effective dose equivalent of 0.25 Sv (25 rem) or more.

b. An eye dose equivalent of 0.75 Sv (75 rem) or more.

c. A shallow dose equivalent to the skin or extremities or a total organ dose equivalent of 2.5 Gy (250 rad) or more.

2. The release of radioactive material, inside or outside of a restricted area, so that, had an individual been present for 24 hours, the individual could have received an intake 5 times the occupational ALI. This subdivision does not apply to locations where personnel are not normally stationed during routine operations, such as hot−cells or process enclosures.

(b) A licensee or registrant shall, within 24 hours of discovery of the event, report to the department each event involving loss of control of a licensed or registered source of radiation possessed by the licensee or registrant that may have caused, or threatens to
cause, any of the following conditions:

1. An individual to receive, in a period of 24 hours, any of the following:

a. A total effective dose equivalent exceeding 0.05 Sv (5 rem).

b. An eye dose equivalent exceeding 0.15 Sv (15 rem).

c. A shallow dose equivalent to the skin or extremities or a total organ dose equivalent exceeding 0.5 Sv (50 rem).

2. The release of radioactive material, inside or outside of a restricted area, so that, had an individual been present for 24 hours, the individual could have received an intake in excess of one occupational ALI. This provision does not apply to locations where personnel are not normally stationed during routine operations, such as hot−cells or process enclosures.

(c) A licensee or registrant shall make the reports to the department required by pars. (a) and (b) initially by telephone and shall confirm the initial contact by facsimile to the department. Reports shall contain all of the following information:

1. Caller's name and a telephone number through which the department may reach the caller.

2. Description of the event, including date and time.

3. Exact location of the event.

4. Isotopes, quantities, chemical and physical form of the radioactive material involved, if applicable.

Unofficial Text (See Printed Volume). Current through date and Register shown on Title Page.

5. Any available personnel radiation exposure data.
(d) A licensee or registrant shall record the names of individuals who have received exposure to sources of radiation in a separate and detachable portion of each report filed with the department under this subsection.
(e) This subsection does not apply to doses that result from planned special exposures, provided those doses are within the limits for planned special exposures and are reported under sub.(4).
Note: The Department may be contacted during normal work hours of 7:45 am to 4:30 pm, Monday through Friday, except state holidays, at 608−267−4797; or other times at 608−258−0099 and facsimile 608−267−3695.
(3) REPORTS OF EXPOSURES, RADIATION LEVELS AND CONCENTRATIONS OF RADIOACTIVE MATERIAL EXCEEDING THE LIMITS. (a) In addition to the notification required by sub. (2), a licensee or registrant shall submit a written report to the department within 30 days after learning of any of the following occurrences:
1. Radiation incidents for which notification is required by sub. (2).
2. Doses in excess of any of the following:
a. The occupational dose limits for adults in s. DHS 157.22 (1).
b. The occupational dose limits for a minor in s. DHS 157.22 (7).
c. The limits for an embryo or fetus of a declared pregnant woman in s. DHS 157.22 (8).
d. The limits for a member of the public in s. DHS 157.23 (1).
e. Any applicable limit in the license or registration.
f. The ALARA constraints for air emissions established under s. DHS 157.21 (4).
3. Levels of radiation or concentrations of radioactive material in any of the following:
a. A restricted area in excess of applicable limits in the license or registration.
b. An unrestricted area in excess of 10 times the applicable limit set forth in this subchapter or in the license or registration, whether or not involving exposure of any individual in excess of the limits specified in s. DHS 157.23 (1).
4. For a licensee subject to the provisions of the U.S. environmental protection agency's generally applicable environmental radiation standards in 40 CFR 190, levels of radiation or releases of radioactive material in excess of those standards or of license conditions related to those standards.
(b) Each report required by par. (a) shall describe the extent of exposure of individuals to radiation and radioactive material, including all the following, as appropriate:
1. Description of the event, including the probable cause of the elevated exposures, dose rates or concentrations and the manufacturer and model number of any equipment that failed or malfunctioned.
2. Date, time and exact location of the event.
3. The levels of radiation and concentrations of radioactive material involved.
4. Estimates of each individual's dose.
5. Corrective steps taken or planned to ensure against a recurrence, including the schedule for achieving conformance with applicable limits, generally applicable environmental standards and associated license or registration conditions.
6. For each individual exposed: the name, unique identification number and date of birth. With respect to the limit for the embryo or fetus in s. DHS 157.22 (8), the identifiers should be those of the declared pregnant woman. The report shall be prepared so that this information is stated in a separate and detachable portion of the report.
(4) REPORTS OF PLANNED SPECIAL EXPOSURES. A licensee or registrant shall submit a written report to the department within 30 days following any planned special exposure conducted under s. DHS 157.22 (6), informing the department that a planned special exposure was conducted and indicating the date the planned special exposure occurred and the information required by s. DHS 157.31 (6).
(5) REPORTS OF INDIVIDUAL MONITORING. (a) This subsection applies to any person licensed or registered by the department to do any of the following:
1. Possess or use sources of radiation for purposes of industrial radiography under subchs. II and IV of this chapter.
2. Receive radioactive waste from other persons for disposal.
3. Possess or use at any time, for processing or manufacturing for distribution under subchs. II or VI of this chapter, radioactive material in quantities exceeding any one of the following:

	Activity	
Radionuclide	**Ci**	**GBq**
Cesium−137	1	37

Unofficial Text (See Printed Volume). Current through date and Register shown on Title Page.

Cobalt−60	1	37
Gold−198	100	3,700
Iodine−131	1	37
Iridium−192	10	370
Krypton−85	1,000	37,000
Promethium−147	10	370
Technetium−99m	1,000	37,000

Note: The Department may require as a license condition, or by rule or order, reports from licensees or registrants who are licensed or registered to use radionuclides not on this list in quantities sufficient to cause comparable radiation levels.

(b) A licensee or registrant in a category listed in par. (a) shall submit an annual report of the results of individual monitoring carried out by the licensee or registrant for each individual for whom monitoring was required by s. DHS 157.25 (2) during that year. A licensee or registrant may include additional data for individuals for whom monitoring was provided but not required. A licensee or registrant shall use the department's record of individual monitoring results form or equivalent or electronic media containing all the information required by the department's record of individual monitoring results form.

Note: The form may be obtained by writing the Department at: Department of Health and Family Services, Radiation Protection Section, P.O. Box 2659, Madison WI 53701−2659; or by downloading from the Department website at: http://DHS.wisconsin. gov/dph_beh/RadiatioP/Index.htm.

(c) A licensee or registrant shall file the report required by par.(b), covering the preceding year, on or before April 30 of each year. A licensee or registrant shall submit the report to the department.

Note: The report may be mailed to the department at: Department of Health and Family Services, Radiation Protection Section, PO Box 2659, Madison WI 53701−2659.

(6) NOTIFICATIONS AND REPORTS TO INDIVIDUALS. When a licensee or registrant is required under sub. (3), (4) or (5) to report to the department any exposure of an occupationally exposed individual or member of the public to radiation or radioactive material, a licensee or registrant shall also notify the individual who was exposed. The licensee or registrant shall transmit the notice to the individual no later than the transmittal to the department and the licensee or registrant shall comply with the provisions of s. DHS 157.88 (3) (a).

Note: Requirements for notification and reports to individuals of exposure to radiation or radioactive material are specified in s. DHS 157.88 (3).

(7) REPORTS OF LEAKING OR CONTAMINATED SEALED SOURCES. A licensee or registrant shall file a written report within 5 working days with the department if the test for leakage or contamination required under s. DHS 157.24 indicates a sealed source is leaking or contaminated. The report shall describe the equipment involved, the test results and the corrective action taken.

(8) VACATING PREMISES. A specific licensee or registrant shall, at least 30 days before vacating or relinquishing possession or control of premises which may have been contaminated with radioactive material as a result of the licensee's or registrant's activities, notify the department in writing of the licensee's or registrant's intent to vacate. When deemed necessary by the department, the licensee or registrant shall decontaminate the premises in such a manner as the department may specify.

(9) REPORTS OF TRANSACTIONS INVOLVING NATIONALLY TRACKED SOURCES. A licensee who manufactures, transfers, receives, disassembles or disposes of a nationally tracked source shall submit a report to the Nuclear Regulatory Commission that complies with the requirements of 10 CFR 20.2207.

History: CR 01−108: cr. Register July 2002 No. 559, eff. 8−1−02.

DHS 157.33 Radiological criteria for license termination. (1) GENERAL.

(a) The criteria in this section apply to the decommissioning of facilities licensed under this chapter, as well as other facilities under the department's jurisdiction.

(b) The criteria in this section do not apply to sites that meet any of the following criteria:

1. Have been decommissioned prior to August 1, 2002.

2. Have previously submitted and received NRC approval on a license termination plan or decommissioning plan.

(c) After a site has been decommissioned and the license terminated in accordance with the criteria in this section, the department shall require additional cleanup only if, based on new information, the department determines that the criteria of this section were not met and residual radioactivity remaining at the site could result in a threat to public health and safety.

(d) When calculating TEDE to the average member of the critical group, the licensee shall determine the peak annual TEDE dose expected within the first 1000 years after decommissioning.

(2) RADIOLOGICAL CRITERIA FOR UNRESTRICTED USE. A site will be considered acceptable for unrestricted use if the residual radioactivity that is distinguishable from background radiation results in a

Unofficial Text (See Printed Volume). Current through date and Register shown on Title Page.

TEDE to an average member of the critical group that does not exceed 0.25 mSv (25 mrem) per year, including exposure from groundwater sources of drinking water, and the residual radioactivity has been reduced to levels that are ALARA. Determination of the levels that are ALARA shall consider any detriments, such as deaths from transportation accidents, expected to potentially result from decontamination and waste disposal.

(3) ALTERNATE CRITERIA FOR A DECOMMISSIONING POSSESSION ONLY LICENSE.

(a) A licensee may decommission a facility and maintain a decommissioning possession only license using alternate criteria greater than the dose criterion specified in sub. (2), provided that the licensee does all of the following:

1. Provides assurance that public health and safety would continue to be protected, and that it is unlikely that the dose from all man−made sources combined, other than medical, would be more than the one mSv/y (100 mrem/y) limit specified under s. DHS 157.23 (1), by submitting an analysis of possible sources of exposure.

2. Reduces doses to ALARA levels, taking into consideration any detriments such as traffic accidents expected to potentially result from decontamination and waste disposal.

3. Has submitted a decommissioning plan to the department indicating the licensee's intent to decommission in accordance with provisions of s. DHS 157.13 (11), and specifying that the licensee proposes to decommission by use of alternate criteria. The licensee shall document in the decommissioning plan how the advice of individuals and institutions in the community who may be affected by the decommissioning has been sought and addressed, as appropriate, following analysis of that advice. In seeking such advice, the licensee shall provide for all the following: a. Participation by representatives of a broad cross section of community interests who may be affected by the decommissioning.

b. An opportunity for a comprehensive, collective discussion on the issues by the participants.

c. A publicly available summary of the results of all discussions held under subd. 3. b., including a description of the individual viewpoints of the participants on the issues and the extent of agreement and disagreement among the participants on the issues.

d. Restrictions on site use, to the extent practical, to minimize exposures at the site.

(b) The department may approve the use of alternate criteria to terminate a license after the department considers any comments provided by the environmental protection agency and any public comments submitted under par. (a).

(4) PUBLIC NOTIFICATION AND PUBLIC PARTICIPATION. (a) Upon the receipt of a decommissioning plan from the licensee, or a proposal by the licensee for release of a site under sub. (3) or whenever the department deems such notice to be in the public interest, the department shall do all the following:

1. Notify and solicit comments from all the following:

a. Local and state governments in the vicinity of the site and any Indian nation or other indigenous people that have treaty or statutory rights that could be affected by the decommissioning.

b. The US environmental protection agency and the Wisconsin department of natural resources for cases where the licensee proposes to release a site under sub. (3).

2. Publish a notice in the Wisconsin Administrative Register and in a forum, such as local newspapers, that is readily accessible to individuals in the vicinity of the site, and solicit comments from affected parties.

History: CR 01−108: cr. Register July 2002 No. 559, eff. 8−1−02; **CR 06−021: am. (2) and (3) (a) 3. (intro.), r. and recr. (3) (a) (intro.), cr. (3) (a) 3. d. Register October 2006 No. 610, eff. 11−1−06**.

Subchapter IV — Radiation Safety Requirements for Industrial Radiographic Operations

DHS 157.35 Exemptions. Industrial uses of hand−held imaging intensification devices are exempt from the requirements of this subchapter if the dose rate 0.45 meters (18 inches) from the source of radiation to any individual does not exceed .02 mSv (2.0 mR) per hour. Industrial x−ray tubes are exempt from the inventory, leak testing and materials labeling requirements of this subchapter. All other requirements apply.

History: CR 01−108: cr. Register July 2002 No. 559, eff. 8−1−02.

DHS 157.36 Performance requirements for industrial radiography equipment.

(1) EQUIPMENT. Equipment used in industrial radiographic operations shall meet all the following minimum criteria:

Unofficial Text (See Printed Volume). Current through date and Register shown on Title Page.

(a) Except as provided in sub. (2), each radiographic exposure device, source assembly or sealed source and all associated equipment shall meet the requirements specified in ANSI N432−1980 "Radiological Safety for the Design and Construction of Apparatus for Gamma Radiography".

Note: The publication ANSI N432−1980 "Radiological Safety for the Design and Construction of Apparatus for Gamma Radiography" published by the ANSI, may be consulted at the Department of Health and Family Services, Radiation Protection Section, 1 West Wilson St, Room 150, Madison WI 53702−0007 or at the Secretary of State's Office or the Legislative Reference Bureau.

1. A licensee shall ensure that each radiographic exposure device has attached to it a durable, legible, clearly visible label bearing all the following information:

a. Chemical symbol and mass number of the radionuclide in the device.

b. Activity and the date on which activity was last measured.

c. Model or product code and serial number of the sealed source.

d. Name of the manufacturer of the sealed source.

e. Licensee's name, address and telephone number.

2. Radiographic exposure devices intended for use as type B packages shall meet the applicable transportation requirements of subch. XIII.

3. Modification of radiographic exposure devices, source changers and source assemblies and associated equipment is prohibited, unless the design of any replacement component, including source holder, source assembly, controls or guide tubes would not compromise the design safety features of the system.

(b) The following additional requirements apply to radiographic exposure devices, source assemblies and associated equipment that allow the source to be moved out of the device for radiographic operations or to source changers:

1. The coupling between the source assembly and the control cable shall be designed so that the source assembly will not become disconnected if cranked outside the guide tube. The coupling shall be constructed so that it cannot be unintentionally disconnected under normal and reasonably foreseeable abnormal conditions.

2. The device must automatically secure the source assembly when it is cranked back into the fully shielded position within the device. This securing system may only be released by means of a deliberate operation on the exposure device.

3. The outlet fittings, lock box and drive cable fittings on each radiographic exposure device shall be equipped with safety plugs or covers installed during storage and transportation to protect the source assembly from water, mud, sand or other foreign matter.

4. Each sealed source or source assembly shall have attached to it or engraved on it a durable, legible, visible label with the words: "DANGER −− RADIOACTIVE."

5. The label in subd. 4. may not interfere with the safe operation of the exposure device or associated equipment.

6. The guide tube shall be able to withstand a crushing test that closely approximates the crushing forces that are likely to be encountered during use and be able to withstand a kinking resistance test that closely approximates the kinking forces that are likely to be encountered during use.

7. Guide tubes shall be used when moving the source out of the device.

8. An exposure head or similar device designed to prevent the source assembly from passing out of the end of the guide tube shall be attached to the outermost end of the guide tube during industrial radiography operations.

9. The guide tube exposure head connection shall be able to withstand the tensile test for control units specified in ANSI N432 − 1980.

10. Source changers shall provide a system for ensuring that the source will not be accidentally withdrawn from the changer when connecting or disconnecting the drive cable to or from a source assembly.

(c) All radiographic exposure devices and associated equipment in use after January 10, 1996 shall comply with the requirements of this section.

(2) EXCEPTION. Equipment used in industrial radiographic operations need not comply with 6.6.2 of the Endurance Test in ANSI N432 − 1980 "Radiological Safety for the Design and Construction of Apparatus for Gamma Radiography" if the prototype equipment has been tested using a torque value representative of the torque that an individual using the radiography equipment may reasonably exert on the lever or crankshaft of the drive mechanism.

Note: The publication N432 1980 "Radiological Safety for the Design and Construction of Apparatus for Gamma Radiography", ANSI, published by the ANSI, may be consulted at the Department of Health and Family Services, Radiation Protection Section, 1 West Wilson St, Room 150, Madison WI 53702−0007 or at the Secretary of State's Office or the Legislative Reference Bureau.

Unofficial Text (See Printed Volume). Current through date and Register shown on Title Page.

History: CR 01−108: cr. Register July 2002 No. 559, eff. 8−1−02; **CR 06−021:am. (1) (a) (intro.), 1. (intro.), 3., (b) 9. and (2) Register October 2006 No. 610,eff. 11−1−06**.

DHS 157.37 Radiation safety requirements for storage containers and source changers.
(1) MAXIMUM EXPOSURE RATE LIMITS. The maximum exposure rate limits for storage containers and source changers are 2 millisieverts (200 mrem) per hour at any exterior surface and 0.1 millisieverts (10 mrem) per hour at one meter from any exterior surface with the sealed source in the shielded position.
(2) LOCKING. (a) A radiographic exposure device shall have a lock or outer locked container designed to prevent unauthorized or accidental removal of the sealed source from its shielded position. The exposure device and its container shall be kept locked when not under direct surveillance by a radiographer or a radiographer's assistant, except at permanent radiographic installations. If a keyed lock, the key shall be removed at all times except to open or close the lock on the device or container. In addition, during radiographic operations the sealed source assembly shall be secured in the shielded position each time the source is returned to that position.
(b) Each sealed source storage container and source changer shall have a lock or outer locked container designed to prevent unauthorized or accidental removal of the sealed source from its shielded position. Storage containers and source changers shall be kept locked when containing sealed sources except when under the direct surveillance of a radiographer or a radiographer's assistant. If a keyed lock, the key shall be removed at all times.
(c) The control panel of all portable radiation machines shall be equipped with a lock that will prevent the unauthorized use of an x−ray system or the accidental production of radiation. The radiation machine shall be kept locked and the key removed at all times except when under the direct visual surveillance of a radiographer or a radiographer's assistant.
History: CR 01−108: cr. Register July 2002 No. 559, eff. 8−1−02. **DHS 157.38 Radiation survey instruments.**
(1) REQUIREMENT. A licensee shall keep sufficient calibrated and operable radiation survey instruments at each location where sources of radiation are present to make the radiation surveys required by this subchapter and subch. III. Instrumentation required by this subchapter shall be capable of measuring a range from 0.02 millisieverts (2 mrem) per hour through 0.01 sievert (1 rem) per hour.
(2) CALIBRATION. (a) A licensee shall have each radiation survey instrument calibrated for all the following:
1. At energies appropriate for use and at intervals not to exceed 6 months or after instrument servicing, except for battery changes.
2. For linear scale instruments, at 2 points located approximately one−third and two−thirds of full scale on each scale; for logarithmic scale instruments, at mid−range of each decade and at 2 points of at least one decade; and for digital instruments at 3 points between 0.02 and 10 millisieverts (2 and 1000 mrem) per hour.
(b) Accuracy within plus or minus 20% of the true radiation dose rate shall be demonstrated at each point checked.
History: CR 01−108: cr. Register July 2002 No. 559, eff. 8−1−02.

DHS 157.39 Leak testing and replacement of sealed sources. (1) AUTHORIZATION.
(a) The replacement of any sealed source fastened to or contained in a radiographic exposure device and leak testing of any sealed source shall be performed by persons authorized to do so by the department, the nuclear regulatory commission or another agreement state.
(b) The opening, repair or modification of any sealed source shall be performed by persons specifically authorized to do so by the department, the nuclear regulatory commission or another agreement state.
(2) LEAK TESTING AND RECORD KEEPING REQUIREMENTS. (a) A licensee who uses a sealed source shall have the source tested for leakage at intervals not to exceed 6 months. The leak testing of the source shall be performed using a method approved by the department, the nuclear regulatory commission or by another agreement state. The wipe sample should be taken from the nearest accessible point to the sealed source where contamination might accumulate. The wipe sample shall be analyzed for radioactive contamination. The analysis shall be capable of detecting the presence of 185 becquerel (0.005 μCi) of radioactive material on the test sample and shall be performed by a person specifically authorized by the department, the US nuclear regulatory commission or another agreement state to perform the analysis.
(b) A licensee shall maintain records of the leak tests for 3 years.

Unofficial Text (See Printed Volume). Current through date and Register shown on Title Page.

(c) Unless a sealed source is accompanied by a certificate from the transferor that shows that it has been leak tested within 6 months before the transfer, it may not be used by the licensee until tested for leakage. Sealed sources that are in storage and not in use do not require leak testing, but shall be tested before use or transfer to another person if the interval of storage exceeds 6 months.
(d) Any leak test that reveals the presence of 185 becquerel (0.005 μCi) or more of removable radioactive material shall be considered evidence that the sealed source is leaking. The licensee shall immediately withdraw the equipment involved from use and shall have it decontaminated and repaired, or disposed of. A report must be filed with the department within 5 days of any test with results that exceed the threshold in this paragraph, describing the equipment involved, the test results and the corrective action taken.
(e)
1. Each exposure device using depleted uranium shielding and an "S" tube configuration shall be tested for DU contamination at intervals not to exceed 12 months. The analysis shall be capable of detecting the presence of 185 becquerel (0.005 μCi) of radioactive material on the test sample and shall be performed by a person specifically authorized by the department, the nuclear regulatory commission or another agreement state to perform the analysis. If the testing reveals the presence of DU contamination, the exposure device shall be removed from use until an evaluation of the wear of the S−tube has been made. If the evaluation reveals that the S−tube is worn through, the device may not be used again.
2. DU shielded devices need not be tested for DU contamination while not in use and in storage. If the DU shielded device has not been used and in storage for more than 12 months, the device shall be tested for DU contamination before using or transferring the device. A record of the DU leak−test shall be retained for 3 years.
History: CR 01−108: cr. Register July 2002 No. 559, eff. 8−1−02.

DHS 157.40 Quarterly inventory. (1) REQUIREMENT. A licensee shall conduct a quarterly physical inventory to account for all sources of radiation and for devices, including devices containing depleted uranium, received and possessed under the
license.
(2) RECORDS. A licensee shall maintain records of the quarterly inventory for 3 years. The record shall include the date of the inventory, name of the individual conducting the inventory, radionuclide, source activity in becquerels or curies or mass of DU in each device, location of the sources and devices, manufacturer, model and serial number of each source of radiation.
History: CR 01−108: cr. Register July 2002 No. 559, eff. 8−1−02.

DHS 157.41 Inspection and maintenance of radiation machines, radiographic exposure devices, transport and storage containers, associated equipment, source changers and survey instruments. (1) INSPECTION REQUIREMENTS. (a) A licensee or registrant shall perform visual and operability checks on survey meters, radiation machines, radiographic exposure devices, transport and storage containers, associated equipment and source changers before each day's use or work shift, to ensure that all the following applies:
1. The equipment is in good working condition.
2. The sources are adequately shielded.
3. Required labeling is present.
(b) Survey instrument operability shall be performed using check sources or other appropriate means.
(c) If equipment problems are found, the equipment shall be removed from service until repaired.
(2) PROCEDURES. (a) A licensee or registrant shall perform inspection and routine maintenance of radiation machines, radiographic exposure devices, source changers, associated equipment, transport and storage containers and survey instruments at intervals not to exceed 3 months or before the first use thereafter to ensure the proper functioning of components important to safety. Replacement components shall meet design specifications. A licensee or registrant shall utilize written inspection and maintenance procedures. If equipment problems are found, the equipment shall be removed from service until repaired.
(b) A licensee's inspection and maintenance program shall include procedures to assure that type B packages are shipped and maintained under the certificate of compliance or other approval. A program for transport container inspection and maintenance limited to radiographic exposure devices, source changers or packages transporting these devices and meeting the requirements of this subsection or equivalent NRC or agreement state requirements, shall satisfy the requirements of s. DHS 157.94 (6).
(c) Records of equipment problems and of any maintenance performed shall be retained for 3 years.

Unofficial Text (See Printed Volume). Current through date and Register shown on Title Page.

History: CR 01−108: cr. Register July 2002 No. 559, eff. 8−1−02; **CR 06−021: am. (2) (a) Register October 2006 No. 610, eff. 11−1−06**.

DHS 157.42 Permanent radiographic installations. (1) ENTRY REQUIREMENTS. Each entrance that is used for personnel access to the high radiation area in a permanent radiographic installation shall have either of the following:
(a) An entrance control of the type described in s. DHS 157.26 (1) (a) 1. that causes the radiation level upon entry into the area to be reduced. Entrance control devices that reduce the radiation level upon entry shall be tested monthly.
(b) Both conspicuous visible and audible warning signals to warn of the presence of radiation. The visible signal shall be actuated by radiation whenever the source is exposed or the machine is energized. The audible signal shall be actuated when an attempt is made to enter the installation while the source is exposed or the machine is energized. The alarm system shall be tested for proper operation with a radiation source each day before the installation is used for radiographic operations. The test shall include a check of both the visible and audible signals. ~~Entrance control devices that reduce the radiation level upon entry shall be tested monthly.~~
(2) DEVICE FAILURE. If an entrance control device or an alarm is operating improperly, it shall be immediately labeled as defective and repaired within 7 calendar days. The facility may continue to be used during this 7−day period provided the licensee or registrant implements continuous surveillance and uses an alarming ratemeter. Test records for entrance controls and audible and visual alarms shall be maintained for 3 years.
History: CR 01−108: cr. Register July 2002 No. 559, eff. 8−1−02; **CR 06−021: am. (1) (a) Register October 2006 No. 610, eff. 11−1−06**.

DHS 157.43 Labeling, transportation and storage. (1) LABELING REQUIREMENTS. A licensee may not use a source changer or a container to store radioactive material unless the source changer or the storage container has securely attached to it a durable, legible and clearly visible label bearing the standard trefoil radiation caution symbol with conventional colors, which is magenta, purple or black on a yellow background, having a minimum diameter of 25 millimeters and the wording:

CAUTION (or DANGER)
RADIOACTIVE MATERIAL
NOTIFY CIVIL AUTHORITIES
[or "NAME OF COMPANY"]

(2) TRANSPORT. A licensee may not transport radioactive material unless the material is packaged and the package is labeled, marked and accompanied with appropriate shipping papers under regulations set out in subch. XIII. (a) A licensee shall lock and physically secure the transport package containing radioactive material in the transporting vehicle to prevent accidental loss, tampering or unauthorized removal.
(b) A licensee's or registrant's name and city or town where the main business office is located shall be prominently displayed with a durable, clearly visible label or labels on both sides of all vehicles used to transport radioactive material or radiation machines for temporary job site use.
(3) STORAGE. Radiographic exposure devices, source changers, storage containers and radiation machines, shall be physically secured to prevent tampering or removal by unauthorized personnel. The licensee shall store radioactive material in a manner that minimizes danger from explosion or fire.
History: CR 01−108: cr. Register July 2002 No. 559, eff. 8−1−02.

DHS 157.44 Operational radiation safety requirements. (1) CONDUCTING INDUSTRIAL RADIOGRAPHIC OPERATIONS. (a) Whenever radiography is performed at a location other than a permanent radiographic installation, the radiographer shall be accompanied by at least one other certified radiographer or radiographer's assistant. The additional individual shall observe the operations and be capable of providing immediate assistance to prevent unauthorized entry. Radiography may not be performed if only one individual is present.
(b) Except when physically impossible, collimators shall be used in industrial radiographic operations that use radiographic exposure devices that allow the source to be moved out of the device.
(c) A licensee may conduct lay−barge, offshore platform or underwater radiography only if procedures have been approved by the department, the NRC or by another agreement state.
(2) RADIATION SAFETY OFFICER. (a) The radiation safety officer shall ensure that radiation safety activities are being performed under approved procedures and regulatory requirements in the daily operation of the licensee's or registrant's program.

Unofficial Text (See Printed Volume). Current through date and Register shown on Title Page.

(b) Except as allowed in par. (c), the minimum qualifications, training and experience for radiation safety officers for industrial radiography are as follows:
1. Completion of the training and testing requirements of sub. (3) (a) and (b).
2. 2000 hours of hands−on experience as a qualified radiographer in industrial radiographic operations.
3. Formal training in the establishment and maintenance of a radiation protection program.
(c) The department may consider alternatives to the requirements of par. (b) when the radiation safety officer has appropriate training and experience in the field of ionizing radiation and has adequate formal training with respect to the establishment and maintenance of a radiation safety protection program.
(d) The specific duties and authorities of the radiation safety officer shall include all the following:
1. Establishing and overseeing all operating, emergency and ALARA procedures as required by subch. III and reviewing the procedures regularly to ensure that the procedures conform to department rules and to the license conditions.
2. Overseeing and approving the training program for radiographic personnel to ensure that appropriate and effective radiation protection practices are taught.
3. Ensuring that required radiation surveys and leak tests are performed and documented under the rules, including any corrective measures when levels of radiation exceed established limits.
4. Ensuring that personnel monitoring devices are calibrated, if applicable, and used properly; that records are kept of the monitoring results; and that timely notifications are made as required by subch. III.
5. Ensuring that operations are conducted safely and implementing corrective actions including terminating operations at the work sites or upon license termination.
(3) TRAINING. (a) In addition to the requirements in par. (b), a licensee or registrant may not permit any individual to act as a radiographer until the individual has completed a minimum of 40 hours of training in the subjects outlined in this paragraph, hands−on experience under the supervision of a radiographer and is certified through a radiographer certification program meeting the requirements of 10 CFR 34 Appendix A. The hands−on experience for radioactive materials shall include a minimum of 320 hours of active participation in the performance of industrial radiography utilizing radioactive material or 160 hours of active participation in the performance of industrial radiography if utilizing only radiation machines. Individuals performing industrial radiography utilizing radioactive materials and radiation machines shall complete both segments of the hands−on experience for a minimum of 480 hours. A licensee or registrant shall include all the following subjects in training:
1. Fundamentals of radiation safety that includes all of the following:
a. Characteristics of gamma and x−ray radiation.
b. Units of radiation dose and quantity of radioactivity.
c. Hazards of exposure to radiation.
d. Levels of radiation from sources of radiation.
e. Methods of controlling radiation dose via time, distance and shielding.
2. Radiation detection instruments that includes all of the following:
a. Use, operation, calibration and limitations of radiation survey instruments.
b. Survey techniques.
c. Use of personnel monitoring equipment.
3. Equipment to be used that includes all of the following:
a. Operation and control of radiographic exposure equipment, remote handling equipment and storage containers, including pictures or models of source assemblies.
b. Operation and control of radiation machines.
c. Storage, control and disposal of sources of radiation.
d. Inspection and maintenance of equipment.
4. The requirements of pertinent state and federal regulations.
5. Case histories of accidents in industrial radiography.
Note: A current list of state and national organizations administering the certification examination may be obtained by writing the Department at: Department of Health and Family Services, Radiation Protection Section, P.O. Box 2659, Madison, WI 53701−2659 or from the following website http://DHS.wisconsin.gov/dph_beh/RadiatioP/IRCerts.htm.
(b) A licensee or registrant may not permit any individual to act as a radiographer until the individual has accomplished all the following:
1. Received copies of and instruction in the requirements described in this subchapter and applicable sections of subchs. III, X and XIII, the license under which the radiographer will perform industrial radiography and the licensee's or registrant's operating and emergency procedures.

Unofficial Text (See Printed Volume). Current through date and Register shown on Title Page.

2. Demonstrated an understanding of the licensee's license and operating and emergency procedures by successful completion of a written or oral examination covering this material.
3. Received training in the use of the registrant's radiation machines or the licensee's radiographic exposure devices, sealed sources, in the daily inspection of devices and associated equipment and in the use of radiation survey instruments.
4. Demonstrated understanding of the use of the equipment described in subd. 3. by successful completion of a practical examination.
(c) A licensee or registrant may not permit any individual to act as a radiographer's assistant until the individual has accomplished all the following:
1. Received copies of and instruction in the requirements described in this subchapter and applicable sections of subchs. III, X and XIII, the license under which the radiographer's assistant will perform industrial radiography and the licensee's or registrant's operating and emergency procedures.
2. Demonstrated an understanding of items in subd. 1. by successful completion of a written or oral examination.
3. Under the personal supervision of a radiographer, received training in the use of the registrant's radiation machines or the licensee's radiographic exposure devices and sealed sources, in the daily inspection of devices and associated equipment and in the use of radiation survey instruments.
4. Demonstrated an understanding of the use of the equipment described in subd. 3. by successful completion of a practical examination.
(d) A licensee or registrant shall provide annual refresher safety training for each radiographer and radiographer's assistant at intervals not to exceed 12 months.
(e) The radiation safety officer or designee shall conduct an inspection program of the job performance of each radiographer and radiographer's assistant to ensure that the department's rules, license requirements and operating and emergency procedures are followed. The department may consider alternatives in those situations where the individual serves as both radiographer and radiation safety officer. An inspection program is not required when a single individual serves as both radiographer and radiation safety officer and performs all radiography operations. The inspection program shall include all the following:
1. Observation of the performance of each radiographer and radiographer's assistant at intervals not to exceed 6 months during an actual industrial radiographic operation.
2. Provide that, if a radiographer or a radiographer's assistant has not participated in an industrial radiographic operation for more than 6 months since the last inspection, the radiographer shall demonstrate knowledge of the training requirements of par. (b) 3. and the radiographer's assistant shall demonstrate knowledge of the training requirements of par. (c) 3. by a practical examination before these individuals may next participate in a radiographic operation.
(f) A licensee or registrant shall maintain records under s. DHS 157.45 (9) of the training specified in this section to include certification documents, written oral and practical examinations, refresher safety training and inspections of job performance.
(4) OPERATING AND EMERGENCY PROCEDURES. (a) Operating and emergency procedures shall include instructions in all the following:
1. Appropriate handling and use of sources of radiation so that no person is likely to be exposed to radiation doses in excess of the limits established in subch. III.
2. Methods and occasions for conducting radiation surveys.
3. Methods for posting signs in and controlling access to radiographic areas.
4. Methods and occasions for locking and securing sources of radiation.
5. Personnel monitoring and the use of personnel monitoring equipment.
6. Transporting equipment to field locations, including packing of radiographic exposure devices and storage containers in the vehicles, placarding of vehicles when required and control of the equipment during transportation as described in subch. XIII.
7. The inspection, maintenance and operability checks of radiographic exposure devices, radiation machines, survey instruments, alarming ratemeters, transport containers and storage containers.
8. Measures to be taken immediately by radiography personnel in the event a pocket dosimeter is found to be off−scale or an alarming ratemeter alarms unexpectedly.
9. The procedure or procedures for identifying and reporting defects and noncompliance as required by s. DHS 157.46.
10. The procedure for notifying the proper persons in the event of an accident or radiation incident.

Unofficial Text (See Printed Volume). Current through date and Register shown on Title Page.

11. Minimizing exposure of persons in the event of an accident or radiation incident, including a source disconnect, a transport accident or loss of a source of radiation.
12. Source recovery procedure if licensee will perform source recoveries.
13. Maintenance of records.
(b) The licensee or registrant shall maintain copies of current operating and emergency procedures under s. DHS 157.45 (10) and (14).
(5) SUPERVISION OF RADIOGRAPHER'S ASSISTANTS. (a) A radiographer's assistant shall be personally supervised by a radiographer when the assistant is using radiographic exposure devices, associated equipment or a sealed source or while conducting radiation surveys required by sub. (7) (b) to determine that the sealed source has returned to the shielded position or the radiation machine is off after an exposure. The personal supervision shall include all the following:
1. The radiographer's physical presence at the site where the sources of radiation are being used.
2. The availability of the radiographer to give immediate assistance if required.
3. The radiographer's direct observation of the assistant's performance of the operations referred to in this section.
(6) PERSONNEL MONITORING. (a) A licensee or registrant may not permit any individual to act as a radiographer or a radiographer's assistant unless, at all times during radiographic operations, each individual wears on the trunk of his or her body a combination of direct reading dosimeter, an alarming ratemeter and a personnel dosimeter that is processed and evaluated by an accredited National Voluntary Laboratory Accreditation Program processor. At permanent radiographic installations where other appropriate alarming or warning devices are in routine use or during radiographic operations using radiation machines, the use of an alarming ratemeter is not required.
1. Pocket dosimeters shall have a range from zero to 2 millisieverts (200 mrem) and shall be recharged at the start of each shift. Electronic personal dosimeters may only be used in place of ion−chamber pocket dosimeters.
2. Each personnel dosimeter shall be assigned to and worn by only one individual.
3. Personnel dosimeters shall be exchanged at periods not to exceed one month.
4. After replacement, each personnel dosimeter shall be returned to the supplier for processing within 14 calendar days of the end of the monitoring period or as soon as practicable. In circumstances that make it impossible to return each personnel dosimeter in 14 calendar days, the circumstances shall be documented and available for review by the department.
(b) Direct reading dosimeters such as pocket dosimeters or electronic personal dosimeters, shall be read and the exposures recorded at the beginning and end of each shift and records shall be maintained as specified under s. DHS 157.45 (11)
(c) Pocket dosimeters or electronic personal dosimeters shall be checked at periods not to exceed 12 months for correct response to radiation and records shall be maintained as specified under s. DHS 157.45 (11). Acceptable dosimeters shall read within plus or minus 20% of the true radiation exposure.
(d) If an individual's pocket dosimeter is determined to be off−scale or the electronic personal dosimeter reads greater than 2 millisieverts (200 mrem), the individual's film badge, TLD or similar approved device shall be sent for processing within 24 hours. In addition, the individual may not resume work associated with the use of sources of radiation until a determination of the individual's radiation exposure has been made. The determination shall be made by the radiation safety officer or the radiation safety officer's designee. The results of the determination shall be included in the records maintained under s. DHS 157.45 (11).
(e) If a personnel dosimeter is lost or damaged, the worker shall cease work immediately until a replacement personnel dosimeter is provided and the exposure is calculated for the time period from issuance to loss or damage. The results of the calculated exposure and the time period for which the personnel dosimeter was lost or damaged shall be included in the records maintained as specified under s. DHS 157.45 (11).
(f) Dosimetry reports received from the accredited National Voluntary Laboratory Accreditation Program personnel dosimeter processor shall be retained as specified under s. DHS 157.45 (11).
(g) Each alarming ratemeter shall meet all the following criteria:
1. Checked to ensure that the alarm functions properly before using at the start of each shift.
2. Set to give an alarm signal at a preset dose rate of 5 millisieverts (500 mrem) per hour; with an accuracy of plus or minus 20% of the true radiation dose rate.

Unofficial Text (See Printed Volume). Current through date and Register shown on Title Page.

3. Require special means to change the preset alarm function.
4. Calibrated at periods not to exceed 12 months for correct response to radiation. A licensee shall maintain records of alarming ratemeter calibrations as specified under s. DHS 157.45 (11).
(7) RADIATION SURVEYS. A licensee or registrant shall do all the following:
(a) Conduct all surveys with a calibrated and operable radiation survey instrument that meets the requirements of s. DHS 157.38.
(b) Conduct a survey of the radiographic exposure device and the guide tube after each exposure when approaching the device or the guide tube. The survey shall determine that the sealed source has returned to its shielded position before exchanging films, repositioning the exposure head or dismantling equipment. Radiation machines shall be surveyed after each exposure to determine that the machine is off.
(c) Conduct a survey of the radiographic exposure device whenever the source is exchanged and whenever a radiographic exposure device is placed in a storage area to ensure that the sealed source is in its shielded position.
(d) Maintain records as specified under s. DHS 157.45 (12).
(8) SURVEILLANCE. During each radiographic operation, the radiographer shall ensure continuous direct visual surveillance of the operation to protect against unauthorized entry into a radiation area or a high radiation area as defined in subchapter I, except at permanent radiographic installations where all entryways are locked and the other requirements of this subchapter are met.
(9) POSTING. All areas in which industrial radiography is being performed shall have conspicuous signs posted as required under s. DHS 157.29 (2). The exceptions listed in s. DHS 157.29 (3) do not apply to industrial radiographic operations.
History: CR 01−108: cr. Register July 2002 No. 559, eff. 8−1−02; correction in (3) (a) (intro.) made under s. 13.93 (2m) (b) 7., Stats., Register July 2002 No. 559; **CR 06−021: am. (3) (b) 2., (6) (a) (intro.), 2. to 4., (e), (f), (g) 3. Register October 2006 No. 610, eff. 11−1−06**.

DHS 157.45 Recordkeeping requirements. (1) RECORDS FOR INDUSTRIAL RADIOGRAPHY. A licensee or registrant shall maintain a copy of the license or registration, documents incorporated by reference and amendments to each of these items until superseded by new documents approved by the department or until the department terminates the license or registration.
(2) RECORDS OF RECEIPT AND TRANSFER OF SOURCES OF RADIATION.
(a) A licensee or registrant shall maintain records showing the receipts and transfers of sealed sources, devices using depleted uranium for shielding and radiation machines and retain each record for 3 years after the record is created.
(b) The records shall include the date, the name of the individual making the record, radionuclide, number of becquerels (curies) or mass and manufacturer, model and serial number of each source of radiation and device, as appropriate.
(3) RECORDS OF RADIATION SURVEY INSTRUMENTS. A licensee or registrant shall maintain records of the calibrations of its radiation survey instruments that are required under s. DHS 157.38 and retain each record for 3 years after the record is created.
(4) RECORDS OF LEAK TESTING OF SEALED SOURCES AND DEVICES CONTAINING DU. A licensee shall maintain records of leak test results for sealed sources and for devices containing DU. The results shall be stated in units of becquerels or μCi. A licensee shall retain each record for 3 years after the record is made or until the source in storage is removed.
(5) RECORDS OF QUARTERLY INVENTORY. (a) A licensee shall maintain records of the quarterly inventory of sources of radiation, including devices containing depleted uranium as required by s. DHS 157.40 and retain each record for 3 years.
(b) The record shall include the date of the inventory, name of the individual conducting the inventory, radionuclide, number of becquerels (curies) or mass in each device, location of sources of radiation and devices and manufacturer, model and serial number of each source of radiation or device, as appropriate.
(6) UTILIZATION LOGS. (a) A licensee or registrant shall maintain utilization logs showing for each source of radiation all the following information:
1. A description, including the make, model and serial number of the radiation machine or the radiographic exposure device, transport or storage container in which the sealed source is located.
2. The identity and signature of the radiographer to whom the radiation source is assigned.
3. The location and dates of use, including the dates removed and returned to storage.
4. For permanent radiographic installations, the dates each radiation machine is energized.
(b) A licensee or registrant shall retain the logs required by par. (a) for 3 years.

Unofficial Text (See Printed Volume). Current through date and Register shown on Title Page.

(7) RECORDS OF INSPECTION AND MAINTENANCE OF RADIATION MACHINES, RADIOGRAPHIC EXPOSURE DEVICES, TRANSPORT AND STORAGE CONTAINERS, ASSOCIATED EQUIPMENT, SOURCE CHANGERS AND SURVEY INSTRUMENTS.
(a) A licensee or registrant shall maintain records specified in s. DHS 157.41 of equipment problems found in daily checks and quarterly inspections of radiation machines, radiographic exposure devices, transport and storage containers, associated equipment, source changers and survey instruments and retain each record for 3 years after it is made.
(b) The record shall include the date of check or inspection, name of inspector, equipment involved, any problems found and what repair and maintenance, if any, was performed.
(8) RECORDS OF ALARM SYSTEM AND ENTRANCE CONTROL CHECKS AT PERMANENT RADIOGRAPHIC INSTALLATIONS. A licensee or registrant shall maintain records of alarm system and entrance control device tests required by s. DHS 157.42 and retain each record for 3 years after it is made.
(9) RECORDS OF TRAINING AND CERTIFICATION. (a) A licensee or registrant shall maintain the following records for 3 years:
1. Records of training of each radiographer and each radiographer's assistant. The record shall include radiographer certification documents and verification of certification status, copies of written tests, dates of oral and practical examinations, the names of individuals conducting and receiving the oral and practical examinations and a list of items tested and the results of the oral and practical examinations.
2. Records of continuing education safety training and semi−annual inspections of job performance for each radiographer and each radiographer's assistant. The records shall list the topics discussed during the safety training, the dates the continuing education safety training was conducted and names of the instructors and attendees. For inspections of job performance, the records shall also include a list showing the items checked and any non−compliance observed by the radiation safety officer or designee.
(10) COPIES OF OPERATING AND EMERGENCY PROCEDURES. A licensee or registrant shall maintain a copy of current operating and emergency procedures until the department terminates the license or registration. Superseded material shall be retained for 3 years after the change is made.
(11) RECORDS OF PERSONNEL MONITORING. A licensee or registrant shall maintain all the following exposure records as specified in s. DHS 157.44 (6):
(a) Direct reading dosimeter readings and yearly operability checks required by s. DHS 157.44 (6) (b) and (c) for 3 years after the record is created.
(b) Records of alarming ratemeter calibrations for 3 years after the record is created.
(c) Personnel dosimeter results received from the accredited National Voluntary Laboratory Accreditation Program processor until the department terminates the license or registration.
(d) Records of estimates of exposures as a result of off−scale personal direct reading dosimeters or lost or damaged film badges, TLD's or similar approved devices until the department terminates the license or registration.
(12) RECORDS OF RADIATION SURVEYS.. A licensee shall maintain a record of each exposure device survey conducted before the device is placed in storage as specified in s. DHS 157.44 (7) (c). Each record shall be maintained for 3 years after it is made.
(13) FORM OF RECORDS. Each record required by this subchapter shall be legible throughout the specified retention period. The record may be the original, a reproduced copy, microform, or electronic storage provided the copy or microform is authenticated by authorized personnel and the microform or electronic copy is capable of reproducing a clear reproduction throughout the required retention period. Records, such as letters, drawings and specifications, shall include all pertinent information, such as stamps, initials and signatures. A licensee or registrant shall maintain adequate safeguards against tampering with and loss of records.
(14) LOCATION OF DOCUMENTS AND RECORDS. A licensee or registrant shall maintain copies of all the following documents:
(a) Records required by this subchapter and other applicable subchapters at the location specified in s. DHS 157.13 (6) (k).
(b) Current copies of the following, sufficient to demonstrate compliance, at each applicable field station and each temporary jobsite:
1. The license or registration authorizing the use of sources of radiation.
2. A copy of this subchapter and subchs. I, III and X.
3. Utilization logs for each source of radiation dispatched from that location as required under sub. (6).

Unofficial Text (See Printed Volume). Current through date and Register shown on Title Page.

4. Records of equipment problems identified in daily checks of equipment as required under sub. (7) (a).
5. Records of alarm system and entrance control checks required under sub. (8), if applicable.
6. Records of direct reading dosimeters such as pocket dosimeters or electronic personal dosimeters readings as required under sub. (11).
7. Operating and emergency procedures as required under sub. (10).
8. Evidence of the latest calibration of the radiation survey instruments in use at the site, as required under sub. (3).
9. Evidence of the latest calibrations of alarming ratemeters and operability checks of dosimeters as required under sub. (11).
10. Survey records as required under sub. (12) and s. DHS 157.31 (4) as applicable for the period of operation at the site.
11. The shipping papers for the transportation of radioactive materials required under subch. XIII.
12. When operating under reciprocity under subch. II, a copy of the applicable state or nuclear regulatory commission license authorizing the use of sources of radiation.

History: CR 01−108: cr. Register July 2002 No. 559, eff. 8−1−02; **CR 06−021: am. (11) (c), r. and recr. (14) (b) 6. Register October 2006 No. 610, eff. 11−1−06**.

DHS 157.46 Notifications. (1) WRITTEN REPORTS. In addition to the reporting requirements specified in 10 CFR 30.50 and in subch. III, a licensee or registrant shall provide a written report to the department within 30 days of the occurrence of any of the following incidents involving radiographic equipment:
(a) Unintentional disconnection of the source assembly from the control cable.
(b) Inability to retract the source assembly to its fully shielded position and secure it in its retracted position.
(c) Failure of any component which is critical to safe operation of the device to properly perform its intended function.
(d) An indicator on a radiation machine fails to show that radiation is being produced, an exposure switch fails to terminate production of radiation when turned to the off position or a safety interlock fails to terminate x−ray production.
(2) REPORTING REQUIREMENTS. A licensee or registrant shall include all the following information in each report submitted under sub. (1) and in each report of overexposure submitted under s. DHS 157.32 (3) which involves failure of safety components of radiography equipment:
(a) Description of the equipment problem.
(b) Cause of each incident, if known.
(c) Name of the manufacturer and model number of equipment involved in the incident.
(d) Place, date and time of the incident.
(e) Actions taken to establish normal operations.
(f) Corrective actions taken or planned to prevent recurrence.
(g) Names and qualifications of personnel involved in the incident.
(3) UNLISTED SITE. A licensee or registrant conducting radiographic operations or storing sources of radiation at any location not listed on the license or registration for a period in excess of 180 days in a year shall notify the department prior to exceeding the 180 days.

History: CR 01−108: cr. Register July 2002 No. 559, eff. 8−1−02.

DHS 157.47 Reciprocity. (1) LICENSES. All reciprocal recognition of licenses by the department shall be granted under subch. II.
(2) CERTIFICATION. (a) The department shall grant reciprocal recognition of an individual radiographer certification provided that all the following apply:
1. The individual holds a valid certification issued by an independent certifying organization or agreement state that meets the criteria in 10 CFR 34 Appendix A.
2. The requirements and procedures of the certifying entity issuing the certification affords the same or comparable certification standards as those afforded by s. DHS 157.44 (3) (a).
3. The applicant presents the certification to the department prior to entry into the state.
4. No escalated enforcement action against the individual is pending with the nuclear regulatory commission or in any other state.

Unofficial Text (See Printed Volume). Current through date and Register shown on Title Page.

(b) A certified individual who is granted reciprocity by the department shall maintain the certification upon which the reciprocal recognition was granted or prior to the expiration of the certification shall meet the requirements of s. DHS 157.44 (3) (a).
History: CR 01−108: cr. Register July 2002 No. 559, eff. 8−1−02.

DHS 157.48 Specific requirements for radiographic personnel performing industrial radiography. (1) JOB SITE REQUIREMENTS. At a job site, a licensee or registrant shall supply all the following:
(a) At least one operable, calibrated survey instrument for each exposure device or radiation machine in use.
(b) A current whole body personnel monitor, TLD, film badge or similar approved device for each person performing radiographic operations.
(c) An operable, calibrated pocket dosimeter with a range of zero to 200 milliroentgens for each person performing radiographic operations.
(d) An operable, calibrated, alarming ratemeter for each person performing radiographic operations using a radiographic exposure device.
(e) Barrier ropes and signs as required in subch. III.
(2) PROOF OF CERTIFICATION. Each radiographer at a job site shall carry on their person a valid certification ID card issued by a certifying entity.
(3) PROHIBITION. Industrial radiographic operations may not be performed if any of the items in subs. (1) and (2) are not available at the job site or are inoperable.
(4) TERMINATION OF OPERATION. During an inspection, the department may terminate an operation if any of the items in sub. (1) or (2) are not available or inoperable or if the required number of radiographic personnel are not present. Operations may not resume until all required conditions are met.
History: CR 01−108: cr. Register July 2002 No. 559, eff. 8−1−02.

Subchapter V — Radiation Safety Requirements for Well Logging

DHS 157.51 Prohibition. (1) WELL LOGGING. (a) A licensee may not perform well logging with a sealed source unless, prior to commencement of the operation, the licensee has a written agreement with the well operator, well owner or land owner that includes all the following provisions:
1. In the event a sealed source is lost in the well, the licensee shall make a reasonable effort at recovery unless, in the licensee's opinion, the recovery effort could result in rupture of the sealed source.
2. If a decision is made to abandon the sealed source in the well, the licensee shall meet the requirements of s. DHS 157.56 (3) and any requirements of the department of natural resources under chs. NR 140 and 500 to 590.
3. If the environment, any equipment, or personnel are contaminated with licensed material, the equipment or personnel shall be decontaminated before release from the site or the site shall be decontaminated before release for unrestricted use.
(b) The licensee shall retain a copy of the written agreement for three years after the completion of the well logging operation.
(c) The licensee shall notify the department of natural resources prior to commencement of any operation involving well logging in a fresh water aquifer.
(2) ACCELERATORS. A licensee or registrant may not permit above−ground testing of accelerators, designed for use in well logging, which results in the production of radiation, except in areas or facilities so controlled or shielded that the area or facility meets the requirements of s. DHS 157.21, as applicable.
History: CR 01−108: cr. Register July 2002 No. 559, eff. 8−1−02; **CR 06−021: renum. (1) to be (1) (a) and am. (1) (a) (intro.) to 2., cr. (1) (b) and (c) Register October 2006 No. 610, eff. 11−1−06**.

DHS 157.52 Equipment control. (1) LIMITS ON LEVELS OF RADIATION. Sources of radiation shall be used, stored and transported in accordance with the transportation requirements of subch. XIII and the dose limitation requirements of subch. III.
(2) STORAGE PRECAUTIONS.
(a) Each source of radiation, except accelerators, shall be provided with a storage or transport container. The container shall be equipped with a lock, or tamper seal for calibration sources, to prevent unauthorized removal of or exposure to the source of radiation.

Unofficial Text (See Printed Volume). Current through date and Register shown on Title Page.

(b) A source of radiation shall be stored in a manner that minimizes danger from explosion or fire.
(3) TRANSPORT PRECAUTIONS. A transport container shall be physically secured to the transporting vehicle to prevent accidental loss, tampering or unauthorized removal.
(4) RADIATION SURVEY INSTRUMENTS. (a) A licensee or registrant shall maintain sufficient calibrated and operable radiation survey instruments at each field station and temporary job site to make physical radiation surveys as required by this subchapter and by s. DHS 15 7.25 (1). Instrumentation shall be capable of measuring one uSv (0.1 milliroentgen) per hour through at least 0.5 mSv (50 milliroentgens) per hour.
(b) Each radiation survey instrument shall be calibrated according to all the following requirements:
1. At energies and geometry appropriate for use.
2. At intervals not to exceed 12 months and after each instrument servicing.
3. For linear scale instruments, at 2 points located approximately one−third and two−thirds of full−scale on each scale; for logarithmic scale instruments, at midrange of each decade, and at 2 points of at least one decade; and for digital instruments, at appropriate points.
4. At an accuracy within 20% of the true radiation level on each scale.
(c) Calibration records shall be maintained for a period of 3 years after the calibration date for inspection by the department.
(d) A licensee or registrant shall have available additional calibrated and operable radiation survey instruments that are capable of detecting low radiation and contamination levels that could be encountered if a sealed source ruptured. A licensee or registrant may own the instruments or may have a written procedure to obtain them within 24 hours from another location.
(5) LEAK TESTING OF SEALED SOURCES. (a) A licensee using sealed sources of radioactive material shall have the sources tested for leakage. Records of leak test results shall be kept in units of becquerels or microcuries and maintained for inspection by the department for 3 years after the leak test is performed or until transfer or disposal of the sealed source.
(b) Tests for leakage shall be performed only by persons specifically authorized to perform such tests by the department, the NRC, an agreement state or a licensing state. The test for leakage shall be performed using a test kit or method approved by the department, the NRC, an agreement state or a licensing state. The test sample shall be taken from the surface of the source, source holder or from the surface of the device in which the source is stored or mounted and on which one might expect contamination to accumulate. The test sample shall be analyzed for radioactive contamination and the analysis shall be capable of detecting the presence of 185 becquerels (0.005 microcurie) of radioactive material on the test sample.
(c) Each sealed source of radioactive material shall be tested at intervals not to exceed 6 months, except energy compensation sources which may be tested every 3 years. In the absence of a certificate from a transferor indicating that a test has been made prior to the transfer, the sealed source may not be put into use until tested. If, for any reason, it is suspected that a sealed source may be leaking, it shall be removed from service immediately and tested for leakage within 30 calendar days.
(6) LEAKING OR CONTAMINATED SOURCES. If leak testing of a source reveals the presence of 185 becquerels (0.005 microcurie) or more of leakage or contamination, a licensee shall immediately withdraw the source from use and shall cause it to be decontaminated, repaired or disposed of under the requirements of this chapter. A licensee shall file a written report with the department within 5 days of receiving the test results that describes the equipment involved, the test results and the corrective action taken.
(7) EXEMPTIONS. The following sources are exempted from the requirements of subs. (5) and (6).
(a) Hydrogen−3 sources.
(b) Sources of radioactive material with a half−life of 30 days or less.
(c) Sealed sources of radioactive material in gaseous form.
(d) Sources of beta− or gamma−emitting radioactive material with an activity of 3.7 MBq (100 microcuries) or less.
(e) Sources of alpha− or neutron emitting radioactive material with an activity of 0.370 MBq (10 microcuries) or less.
(8) PHYSICAL INVENTORY. A licensee or registrant shall conduct a semi−annual physical inventory to account for all sources of radiation. Records of inventories shall be maintained for 3 years from the date of the inventory for inspection by the department and shall include the quantities and kinds of sources of

Unofficial Text (See Printed Volume). Current through date and Register shown on Title Page.

radiation, the location where sources of radiation are assigned, the date of the inventory and the name of the individual conducting the inventory.

(9) UTILIZATION RECORDS. A licensee or registrant shall maintain current records, which shall be kept available for inspection by the department for 3 years from the date of the recorded event, showing all of the following information for each source of radiation:

(a) Make, model number and a serial number or a description of each source of radiation used.

(b) The identity of the well logging supervisor who is responsible for the sources of radiation used and the identity of the well logging assistants present.

(c) Locations where used and dates of use.

(d) In the case of tracer materials and radioactive markers, the utilization record shall indicate the radionuclide and activity used in a particular well and the disposition of any unused tracer material.

(10) DESIGN PERFORMANCE CRITERIA FOR SEALED SOURCES. (a) Each sealed source, except those containing radioactive material in gaseous form or in energy compensation sources (ECS), used in well logging applications, shall meet all the following criteria:

1. Have doubly encapsulated construction.

2. Contain licensed material whose chemical and physical forms are as insoluble and non−dispersable as practical.

3. Meet the requirements of par. (b).

(b) Each sealed source, except those used in energy compensation sources (ECS), shall meet one of the following requirements:

1. For a sealed source manufactured on or before July 14, 1989, the requirements from the United States of America Standards Institute N5.10−1968, "Classification of Sealed Radioactive Sources."

2. For a sealed source manufactured after July 14, 1989, the oil−well logging requirements from the American National Standard Institute/Health Physics Society N43.6−1997, "Sealed Radioactive Sources−Classification."

3. For a sealed source manufactured after July 14, 1989, the sealed source's prototype has been tested and found to maintain its integrity after each of the following tests:

a. Temperature. The test source shall be held at −40 degrees Celsius for 20 minutes, 600 degrees Celsius for one hour, and then be subjected to a thermal shock test with a temperature drop from 600 degrees Celsius to 20 degrees Celsius within 15 seconds.

b. Impact. A 5 kilogram (kg) steel hammer, 2.5 centimeters in diameter, shall be dropped from a height of 1 meter (m) onto the test source.

c. Vibration. The test source shall be subjected to a vibration from 25 Hertz (Hz) to 500 Hz with a peak amplitude of five times the acceleration of gravity for 30 minutes.

d. Puncture. A 1 gram (gm) hammer and pin, 0.3 centimeter (cm) pin diameter, shall be dropped from a height of 1 meter (m) onto the test source.

e. Pressure. The test source shall be subjected to an external pressure of 24,600 pounds per square inch absolute (1.695 X 107 pascals) without leakage.

Note: The publication, "Sealed Radioactive Sources − Classification," American National Standard Institute/Health Physics Society N43.6−1997, published by the American National Standard Institute, may be consulted at the Department of Health and Family Services, Radiation Protection Section, 1 West Wilson St, Room 150, Madison WI 53702−0007 or at the Secretary of State's Office or the Legislative Reference Bureau. The publication may be purchased from the Health Physics Society, 1313 Dolley Madison Blvd., Suite 402, McLean, VA 22101.

(c) Licensee use of an energy compensation source, which may contain quantities no greater than 3.7 MBq (100 microcuries), is exempt from the requirements of this subchapter, except for all the following:

1. A licensee using an ECS in a well with a surface casing for protecting fresh water aquifers shall meet the requirements of subs. (5) to (9).

2. A licensee using an ECS in a well without a surface casing for protecting fresh water aquifers shall meet the requirements of subs. (5) to (9), and ss. DHS 157.51 (1) (a), 157.53 (2) and 157.56.

(d) Licensee use of a tritium neutron generator target source is exempt from the following requirements of this subchapter:

1. A licensee using a tritium neutron generator target source, containing quantities no greater than 1,110 GBq (30 curies), in a well with a surface casing to protect fresh water aquifers is exempt from the requirements of s. DHS 157.56 and this subsection except for pars. (a) and (b) for tritium neutron generator target source use only.

2. A licensee using a tritium neutron generator target source, containing quantities exceeding 1,110 GBq (30 curies), or in a well without a surface casing to protect fresh water aquifers is exempt from the

Unofficial Text (See Printed Volume). Current through date and Register shown on Title Page.

requirements of this subsection except for pars. (a) and (b) for tritium neutron generator target source use only.

(11) LABELING. (a) Each source, source holder or well logging tool containing radioactive material shall bear a durable, legible and clearly visible marking or label which has, as a minimum, the standard radiation caution symbol, without the conventional color requirement, and the following wording:

DANGER (or "CAUTION")
RADIOACTIVE

This label shall be on the smallest component transported as a separate piece of equipment.

(b) Each transport container shall have permanently attached to it a durable, legible and clearly visible label that has, as a minimum, the standard radiation caution symbol and the following wording:

DANGER (or "CAUTION")
RADIOACTIVE
NOTIFY CIVIL AUTHORITIES [OR NAME OF
COMPANY] IF FOUND

(c) Each uranium sinker bar used in well logging applications shall be legibly impressed with the following words:

CAUTION
RADIOACTIVE – DEPLETED URANIUM
NOTIFY CIVIL AUTHORITIES
[OR NAME OF COMPANY] IF FOUND

(12) INSPECTION AND MAINTENANCE. (a) A licensee or registrant shall conduct, at intervals not to exceed 6 months, a program of inspection and maintenance of source holders, well logging tools, source handling tools, storage containers, transport containers and injection tools to assure proper labeling and physical condition. Records of inspection and maintenance shall be maintained for a period of 3 years for inspection by the department.

(b) If any inspection conducted under par. (a) reveals damage to labeling or components critical to radiation safety, the device shall be removed from service until repairs have been made.

(c) If a sealed source is lodged in the source holder, a licensee may not perform any operation such as drilling, cutting or chiseling on the source holder unless the licensee is specifically approved by the NRC, an agreement state or a licensing state to perform the operation.

(d) A licensee may not remove a sealed source from a source holder or logging tool or perform maintenance on sealed sources or holders containing sealed sources unless a written procedure developed under the requirements of s. DHS 157.53 (2) has been approved by the department, the NRC, an agreement state or a licensing state.

(e) A licensee shall visually check source holders, well logging tools and source handling tools for defects prior to each use to ensure that the equipment is in good working condition and that required labeling is present. If defects are found, the licensee shall remove the equipment from service until repaired and a record made listing all of the following:

1. Date of inspection.
2. Name of person conducting the visual inspection.
3. Equipment involved by brand, type and serial number.
4. Defects found.
5. Repairs made.

(f) Records required by par. (e) shall be retained for 3 years after the defect is found.

History: CR 01−108: cr. Register July 2002 No. 559, eff. 8−1−02; **CR 06−021: am. (8), r. and recr. (10) (a) to (d), renum. (10) (e) and (f) to be (10) (c) and (d) and am. (10) (c) 2. and (d) 1. and 2. Register October 2006 No. 610, eff. 11−1−06**.

DHS 157.53 Requirements for personnel safety. (1) TRAINING REQUIREMENTS.

(a) A licensee or registrant may not permit an individual to act as a well logging supervisor until the individual has done all of the following:

1. Completed ~~a course recognized by the department, the NRC, another agreement state or a licensing state~~ training incorporating the subjects outlined in Appendix J and demonstrated an understanding of the subject matter by successful completion of a written examination.

2. Read and received instruction in the requirements contained in this subchapter and subchs. I, III and X or their equivalent from another state or the NRC, conditions of appropriate license or certificate of

Unofficial Text (See Printed Volume). Current through date and Register shown on Title Page.

registration and the licensee's or registrant's operating and emergency procedures and demonstrated an understanding of the subject matter by successful completion of a written examination.
3. Completed on the job training and demonstrated competence during actual well logging operations to use sources of radiation, related handling tools and radiation survey instruments that will be used on the job.
(b) A licensee or registrant may not permit an individual to assist in the handling of sources of radiation until the individual has done both of the following:
1. Read or received instruction in the requirements contained in this subchapter and subchs. I, III and X, and the licensee's operating and emergency procedures and demonstrated an understanding of the subject matter by successful completion of an oral or written test.
2. Demonstrated competence to use, under the personal supervision of the well logging supervisor, the sources of radiation, related handling tools and radiation survey instruments that will be used on the job.
(c) A licensee or registrant shall maintain employee training records for inspection by the department for 3 years following termination of the individual's employment.
(d) A licensee or registrant shall provide safety reviews for well logging supervisors and well logging assistants at least once during each calendar year.
(2) OPERATING AND EMERGENCY PROCEDURES. A licensee's or registrant's operating and emergency procedures shall include instructions in at least all of the following:
(a) Handling and use of sources of radiation to be employed so that no individual is likely to be exposed to radiation doses in excess of the standards established in subch. III.
(b) Methods and occasions for conducting radiation surveys.
(c) Methods and occasions for locking and securing sources of radiation.
(d) Personnel monitoring and the use of personnel monitoring equipment.
(e) Transportation of radioactive sources to temporary job sites and field stations, including the packaging and placing of sources of radiation in vehicles, placarding of vehicles and securing sources of radiation during transportation to prevent loss, tampering or unauthorized removal.
(f) Minimizing exposure of individuals in the event of an accident.
(g) Procedure for notifying the proper personnel in the event of an accident.
(h) Maintenance of records.
(i) Use, inspection and maintenance of source holders, well logging tools, source handling tools, storage containers, transport containers, injection tools, sealed sources and uranium sinker bars.
(j) Procedure to be followed in the event a sealed source is lodged in a well−bore.
(k) Procedures to be used for picking up, receiving and opening packages containing radioactive material.
(L) Procedures for using tracers and decontaminating the environment, equipment and personnel.
(m) Maintenance of records generated by well logging personnel at temporary job sites.
(n) Notifying proper persons in the event of an accident.
(o) Actions to be taken if a sealed source is ruptured, including actions to prevent the spread of contamination and minimize inhalation and ingestion of radioactive material, and actions to obtain suitable radiation survey instruments as required by s. DHS 157.52 (4).
(3) PERSONNEL MONITORING. (a) A licensee or registrant may not permit an individual to act as a well logging supervisor or to assist in the handling of sources of radiation unless the individual wears either a film badge or a thermoluminescent dosimeter or similar approved device. Each film badge or TLD shall be assigned to and worn by only one individual. Film badges shall be replaced at least monthly and TLDs replaced at least quarterly. After replacement, each film badge or TLD shall be promptly processed.
(b) Personnel monitoring records, including bioassay records if required by the license, shall be maintained for inspection until the department authorizes disposition.
History: CR 01−108: cr. Register July 2002 No. 559, eff. 8−1−02; **CR 06−021: am. (1) (a) 1. and 2., cr. (1) (d) Register October 2006 No. 610, eff. 11−1−06.**

DHS 157.54 Precautionary procedures. (1) SECURITY. During each well logging or tracer application, the well logging supervisor or other designated employee shall maintain direct surveillance of the operation to protect against unauthorized or unnecessary entry into a restricted area.
(2) HANDLING TOOLS. A licensee shall provide and require the use of tools that will ensure remote handling of sealed sources other than low−activity calibration sources.
(3) SUBSURFACE TRACER STUDIES. (a) Protective gloves and other appropriate protective clothing and equipment shall be used by all personnel handling radioactive tracer material. Precautions shall be

Unofficial Text (See Printed Volume). Current through date and Register shown on Title Page.

taken to avoid ingestion or inhalation of radioactive material and to avoid contamination of field stations and temporary job sites.
(b) A licensee may not inject or cause the injection of radioactive material into potable fresh water aquifers without prior written authorization from the department.
History: CR 01−108: cr. Register July 2002 No. 559, eff. 8−1−02; **CR 06−021: am. (3) (b) Register October 2006 No. 610, eff. 11−1−06.**

DHS 157.55 Radiation surveys and records. (1) RADIATION SURVEYS.
(a) Radiation surveys or calculations shall be made and recorded for each area where radioactive materials are used and stored.
(b) Radiation surveys shall be made and recorded for the radiation levels in occupied positions and on the exterior of each vehicle used to transport radioactive material. Surveys shall include each source of radiation or combination of sources to be transported in the vehicle.
(c) If the sealed source assembly is removed from the well logging tool before departing the jobsite, the well logging tool detector shall be energized, or a survey meter used, to assure that the well logging tool is free of contamination.
(d) Radiation surveys shall be made and recorded at the jobsite or well−head for each sub−surface tracer study. Surveys shall include measurements of radiation levels before and after the operation.
(e) Records required under pars. (a) to (d) shall include the dates, the identification of individuals making the survey, the identification of survey instruments used and an exact description of the location of the survey. Records of these surveys shall be maintained for inspection by the department for 3 years after completion of the survey.
(2) DOCUMENTS AND RECORDS REQUIRED AT FIELD STATIONS. A licensee or registrant shall maintain, for inspection by the department, all of the following documents and records for the specific devices and sources used at the field station:
(a) Appropriate license, certificate of registration or equivalent documents.
(b) Operating and emergency procedures.
(c) Subchs. l, III, V and X.
(d) Records of the latest survey instrument calibrations under s. DHS 157.52 (4).
(e) Records of the latest leak test results under s. DHS 157.52 (5) and (6).
(f) Records of quarterly inventories under s. DHS 157.52 (8).
(g) Utilization records under s. DHS 157.52 (9).
(h) Records of inspection and maintenance under s. DHS 157.52 (12).
(i) Survey records under sub.(1).
(j) Training records under s. DHS 157.53 (1).
(3) DOCUMENTS AND RECORDS REQUIRED AT TEMPORARY JOB SITES. A licensee or registrant conducting operations at a temporary jobsite shall have all the following documents and records available at the temporary jobsite for inspection by the department:
(a) Operating and emergency procedures.
(b) Survey records required under sub. (1) for the period of operation at the jobsite.
(c) Evidence of current calibration for the radiation survey instruments in use at the jobsite.
(d) During operation in the state under reciprocity, a copy of the appropriate license, certificate of registration or equivalent documents.
(e) Shipping papers for the transportation of radioactive material.
History: CR 01−108: cr. Register July 2002 No. 559, eff. 8−1−02; **CR 06−021: am. (1) (d) Register October 2006 No. 610, eff. 11−1−06**.

DHS 157.56 Notification of incidents, abandonment and lost sources.
(1) PROVISIONS. Notification of incidents, and sources of radiation lost in other than well logging operations, shall be made under appropriate provisions of subch. III.
(2) INITIAL ACTIONS. Whenever a sealed source or device containing radioactive material is lodged in the well−bore or may have ruptured and caused contamination, a licensee shall do all the following:
(a) Monitor at the surface for the presence of radioactive contamination with a radiation survey instrument or well logging tool during recovery operations.
(b) Notify the department immediately by telephone and subsequently, within 30 days, by confirmatory letter if the licensee knows or has reason to believe that a sealed source has been ruptured. The confirmatory letter shall identify the well or other location, describe the magnitude and extent of the escape

Unofficial Text (See Printed Volume). Current through date and Register shown on Title Page.

of radioactive material, assess the consequences of the rupture and explain efforts planned or being taken to mitigate these consequences.

Note: The department may be contacted at: 608−267−4797 during normal business hours of 7:45 am to 4:30 pm, Monday through Friday, except state holidays, and other times at 608−258−0099.

(3) UNSUCCESSFUL RECOVERY. When it becomes apparent that efforts to recover the radioactive source will not be successful, a licensee shall do all the following within 30 days of making the determination that source recovery is not possible or request an extension from the department:

(a) Advise the well operator of the requirements contained in this section and an appropriate method of abandonment, which shall include all the following:

1. Immobilization and sealing in place of the radioactive source with a cement plug.
2. Setting of a deflection device.
3. Mounting of a permanent identification plaque at the surface of the well, containing the information required by sub. (4).

(b) Notify the department by telephone within 24 hours, giving the circumstances of the loss and request approval of the proposed abandonment procedures.

(c) File a written report with the department within 30 working days of the abandonment. A licensee shall send a copy of the report to the department of natural resources bureau that issued permits or otherwise approved of the drilling operation. The report shall contain all the following information:

1. Date of occurrence.
2. A description of the well logging source involved, including the radionuclide and its quantity, chemical and physical form.
3. Surface location and identification of the well.
4. Results of efforts to immobilize and seal the source in place.
5. A brief description of the attempted recovery effort.
6. Depth of the source.
7. Depth of the top of the cement plug.
8. Depth of the well.
9. Any other information, such as a warning statement, contained on the permanent identification plaque.
10. The names of state agencies receiving a copy of the report.

Note: Written reports and requests for extensions may be mailed to the department at the following address: Department of Health and Family Services, Radiation Protection Section, PO Box 2659, Madison, WI, 53701−2659. The telephone contact number is: 608−267−4797 during normal business hours and 608−258−0099 after hours.

(4) POSTING. Whenever a sealed source containing radioactive material is abandoned in a well a licensee shall post a permanent plaque, as described in Appendix K, at the surface of the well. The plaque shall be constructed of long−lasting material, such as stainless steel or monel, and contain all the following information engraved on its face:

(a) The word "CAUTION".
(b) The radiation symbol without the conventional color requirement.
(c) The date of abandonment.
(d) The name of the well operator or well owner.
(e) The well name and well identification number or numbers or other designation.
(f) The sealed source or sources by radionuclide and activity.
(g) The source depth and the depth to the top of the plug.
(h) An appropriate warning, depending on the specific circumstances of each abandonment.

Note: Appropriate warnings may include: (a) "Do not drill below plug−back depth;" (b) "Do not enlarge casing;" or (c) "Do not re−enter the hole," followed by the words, "before contacting the Department of Health and Family Services, Radiation Protection Section".

(5) LOSS IN POTABLE FRESH WATER AQUIFER. A licensee shall immediately notify the department by telephone and within 24 hours by confirming letter if the licensee knows or has reason to believe that radioactive material has been lost in or to an underground potable fresh water aquifer. The notice shall designate the well location, describe the magnitude and extent of loss of radioactive material, assess the consequences of such loss and explain efforts planned or being taken to mitigate these consequences.

Note: The department may be contacted at: Department of Health and Family Services, Radiation Protection Section, P.O. Box 2659, Madison, WI, 53701−2659. Telephone contact is: 608−267−4797 during normal business hours or 608−258−0099 after hours.

History: CR 01−108: cr. Register July 2002 No. 559, eff. 8−1−02; **CR 06−021: am. (4) (intro.) and (5) Register October 2006 No. 610, eff. 11−1−06.**

Subchapter VI — Medical Use of Radioactive Material

DHS 157.59 General requirements. (1) MAINTENANCE OF RECORDS. A record required by this subchapter shall be legible throughout the specified retention period. The record may be the original, a

Unofficial Text (See Printed Volume). Current through date and Register shown on Title Page.

reproduced copy or a microform, provided the copy or microform is authenticated by authorized personnel and the microform is capable of producing a clear copy throughout the required retention period. The record may also be stored electronically with the capability for producing legible, accurate, and complete records during the required retention period. Records such as letters, drawings and specifications, shall include all pertinent information such as stamps, initials and signatures. A licensee shall maintain adequate safeguards against tampering with and loss of records.

(2) PROVISIONS FOR RESEARCH INVOLVING HUMAN SUBJECTS. A licensee may conduct research involving human subjects using radioactive material provided all of the following requirements are met:

(a) A licensee shall apply for and receive approval of a specific amendment to its radioactive materials license before conducting the research. A licensee shall obtain informed consent from the human subjects and obtain prior review and approval of the research activities by an "Institutional Review Board" or equivalent under the meaning of these terms as defined and described in the Federal Policy for the Protection of Human Subjects.

Note: The definition and responsibilities of an Institutional Review Board are described on 45 CFR Part 46 which may be downloaded from the following website: http://www.access.gpo.gov/nara/cfr/waisidx_00/45cfr46_00.html.

(b) The research involving human subjects authorized in par. (a) shall be conducted using radioactive material authorized for medical use in the license.

(c) Nothing in this subsection relieves a licensee from complying with the other requirements in this subchapter or from complying with applicable FDA or other federal requirements governing radioactive drugs or devices.

(3) IMPLEMENTATION. (a) If the requirements of this subchapter are more restrictive than the existing license condition, a licensee shall comply with this subchapter unless exempted by par. (c).

(b) Any existing license condition that is not affected by a requirement in this subchapter remains in effect until there is a license amendment or license renewal.

(c) If a license condition exempted a licensee from a provision of this subchapter on the effective date of August 1, 2002, the exemption shall continue until the department amends, suspends or revokes the license.

(d) If a license condition cites provisions in this subchapter that are later deleted, the license condition remains in effect until a license amendment or renewal modifies or removes the license condition.

History: CR 01−108: cr. Register July 2002 No. 559, eff. − see Note at the start of the chapter.

DHS 157.61 Administrative requirements. (1) AUTHORITY AND RESPONSIBILITIES FOR THE RADIATION PROTECTION PROGRAM.

(a) In addition to the radiation protection program requirements of s. DHS 157.21, a licensee's management shall approve in writing any of the following:

1. A request for license application, renewal or amendment before submittal to the department.

2. Authorization prior to using licensed materials for any individual to work as an authorized user, authorized nuclear pharmacist or authorized medical physicist.

3. A radiation protection program change that does not require a license amendment and is permitted under sub. (2).

(b) A licensee's management shall appoint a radiation safety officer who agrees in writing to be responsible for implementing the radiation protection program. A licensee, through the radiation safety officer, shall ensure that radiation safety activities are being performed under licensee−approved procedures and regulatory requirements.

(c) For up to 60 days each year, a licensee may permit an authorized user or an individual qualified to be a radiation safety officer to function as a temporary radiation safety officer and to perform the functions of a radiation safety officer, as provided in par. (f), provided the licensee takes the actions required in pars. (b), (d), (f) and (g). A licensee may simultaneously appoint more than one temporary radiation safety officer if needed to ensure that the licensee has a temporary radiation safety officer that satisfies the requirements to be an radiation safety officer for each of the different uses of radioactive material permitted by the license.

(d) A licensee shall establish in writing the authority, duties and responsibilities of the radiation safety officer.

(e) A licensee that is authorized for 2 or more different types of uses of radioactive material under ss. DHS 157.64, 157.65 and 157.67 or 2 or more types of units under s. DHS 157.67 shall establish a radiation safety committee to oversee all uses of radioactive material permitted by the license. The committee shall include an authorized user of each type of use permitted by the license, the radiation safety officer, a

Unofficial Text (See Printed Volume). Current through date and Register shown on Title Page.

representative of the nursing service and a representative of management who is neither an authorized user nor a radiation safety officer, and may include other members as the licensee deems appropriate.
(f) A licensee shall provide the radiation safety officer sufficient authority, organizational freedom, time, resources and management prerogative to perform all the following functions:
1. Identify radiation safety problems.
2. Initiate, recommend or provide corrective actions.
3. Stop unsafe operations.
4. Verify implementation of corrective actions.
(g) A licensee shall retain a record of actions taken under pars. (a), (b) and (d) according to the record retention requirements of s. DHS 157.71 (1).
(2) RADIATION PROTECTION PROGRAM CHANGES. (a) A licensee may revise its radiation protection program without department approval if the revision meets all the following criteria:
1. The revision does not require a license amendment.
2. The revision complies with the requirements of this chapter and the license.
3. The revision has been reviewed and approved by the radiation safety officer and licensee management.
4. The affected individuals are instructed on the revised program before the changes are implemented.
(b) A licensee shall retain a record of each change under s. DHS 157.71 (2).
(3) SUPERVISION. (a) A licensee who permits the receipt, possession, use or transfer of radioactive material by an individual under the supervision of an authorized user shall do all the following:
1. Instruct the supervised individual in the licensee's written radiation protection procedures, written directive procedures, requirements of this chapter and license conditions regarding the use of radioactive material.
2. Require the supervised individual to follow the instructions of the supervising authorized user for medical uses of radioactive material, written radiation protection procedures established by the licensee, requirements of this chapter and license conditions regarding the medical use of radioactive material.
(b) A licensee who permits the preparation of radioactive material for medical use by an individual under the supervision of an authorized nuclear pharmacist or physician who is an authorized user shall do all of the following:
1. Instruct the supervised individual in the preparation of radioactive material for medical use, as appropriate to that individual's involvement with radioactive material.
2. Require the supervised person to follow the instructions of the supervising authorized user or authorized nuclear pharmacist regarding the preparation of radioactive material for medical use, the written radiation protection procedures established by the licensee and the regulations of this chapter, and license conditions.
(c) A licensee who permits supervised activities under pars. (a) and (b) is responsible for the acts and omissions of the supervised individual.
(4) WRITTEN DIRECTIVES. (a) 1. A written directive must be dated and signed by an authorized user prior to administration of I−131 sodium iodide greater than 1.11 Megabequerels (30 microcuries), any therapeutic dosage of unsealed radioactive material or any therapeutic dose of radiation from radioactive material.
2. If, because of the emergent nature of the patient's condition, a delay in providing a written directive would jeopardize the patient's health, an oral directive from an authorized user is acceptable provided the information contained in the oral directive is documented immediately in writing in the patient's record and a written directive is prepared within 48 hours of the oral directive.
3. A written revision to an existing written directive may be made provided that the revision is dated and signed by an authorized user prior to the administration of the dosage of radioactive drug containing radioactive material, the brachytherapy dose, the gamma stereotactic radiosurgery dose, the teletherapy dose or the next fractional dose.
4. If, because of the patient's condition, a delay to provide a written revision to an existing written directive would jeopardize the patient's health, an oral revision to an existing written directive will be acceptable, provided that the oral revision is documented immediately in the patient's record and a revised written directive is signed by the authorized user within 48 hours of the oral revision.
(b) The written directive shall contain the patient or human research subject's name and all of the following information:
1. For the administration of a dosage of a radioactive drug, the name, dosage and administration route of the radioactive drug.

Unofficial Text (See Printed Volume). Current through date and Register shown on Title Page.

2. For each anatomically distinct treatment site exposed to gamma stereotactic radiosurgery, total dose, treatment site and number of target settings per treatment.
3. For teletherapy, the total dose, dose per fraction, number of fractions, treatment site and overall treatment period.
4. For high dose rate remote afterloading brachytherapy, the radionuclide, treatment site, dose per fraction, number of fractions and total dose.
5. For all other brachytherapy including low dose rate, medium dose rate and pulsed dose rate afterloading, both of the following:
a. Prior to implantation, treatment site, the radionuclide and dose.
b. After temporary implantation, but prior to completion of the procedure, the radioisotope, treatment site, number of sources, and total source strength and exposure time or, instead of total source strength and exposure time, the total dose.
c. For permanent implantation, the radioisotope, treatment site, number of sources, total source strength, total dose and method of implantation.
(c) A licensee shall retain the written directive under s. DHS 157.71 (3).
(5) PROCEDURES FOR ADMINISTRATIONS REQUIRING A WRITTEN DIRECTIVE.
(a) For any administration requiring a written directive, a licensee shall develop, implement and maintain written procedures to help ensure both of the following:
1. The patient's or human research subject's identity is verified by more than one method before each administration.
2. Each administration is performed according to the provisions of a written directive.
(b) The procedures required by par. (a) shall address all of the following items that are applicable for the licensee's use of radioactive material:
1. Verifying the identity by more than one method of the patient or human research subject.
2. Verifying that the specific details of the administration are under the treatment plan, if applicable, and the written directive.
3. Checking both manual and computer−generated dose calculations, if performed.
4. Verifying that any computer−generated dose calculations are correctly transferred into the consoles of therapeutic remote afterloader, teletherapy or gamma stereotactic radiosurgery units.
(6) SUPPLIERS FOR SEALED SOURCES OR DEVICES FOR MEDICAL USE. For medical use, a licensee may only use the following:
(a) Sealed sources or devices manufactured, labeled, packaged and distributed under a license issued under subch. II or the equivalent requirements of the NRC or another agreement state.
(b) Teletherapy sources manufactured and distributed under a license issued under subch. II or the equivalent requirements of the NRC or another agreement state.
(c) Sealed sources or devices non−commercially transferred from a medical licensee.
(7) TRAINING FOR RADIATION SAFETY OFFICER. Except as provided in sub. (10), a licensee shall ensure that an individual fulfilling the responsibilities of the radiation safety officer has training in radiation safety, regulatory issues and emergency procedures for the types of use for which a licensee seeks approval. This training requirement may be satisfied by completing training that is supervised by a radiation safety officer, authorized medical physicist, authorized nuclear pharmacist or authorized user, as appropriate, who is authorized for the type of use for which the licensee is seeking approval. A licensee shall also require the radiation safety officer to be a person who has obtained written attestation under sub. (12) (a) and meets any of the following requirements:
(a) Is certified by a specialty board whose certification process has been recognized by the department, the NRC or another agreement state. To be recognized, a specialty board shall require all candidates for certification to have either of the following:
1. a. A bachelor's or graduate degree from an accredited college or university in physical science or engineering or biological science with a minimum of 20 college credits in physical science.
b. Five or more years of professional experience in health physics (graduate training may be substituted for no more than 2 years of the required experience) including at least 3 years in applied health physics.
c. Passed an examination administered by diplomates of the specialty board, which evaluates knowledge and competence in radiation physics and instrumentation, radiation protection, mathematics pertaining to the use and measurement of radioactivity, radiation biology, and radiation dosimetry.

Unofficial Text (See Printed Volume). Current through date and Register shown on Title Page.

2. a. Master's or doctor's degree in physics, medical physics, other physical science, engineering, or applied mathematics from an accredited college or university.
b. Two years of full−time practical training and/or supervised experience in medical physics either under the supervision of a medical physicist who is certified in medical physics by a specialty board recognized by the department, the NRC, or another agreement state or in clinical nuclear medicine facilities providing diagnostic and/or therapeutic services under the direction of physicians who meet the requirements for authorized users in s. DHS 157.63 (5) or 157.64 (4).
c. Pass an examination, administered by diplomates of the specialty board, that assesses knowledge and competence in clinical diagnostic radiological or nuclear medicine physics and in radiation safety.
Note: Specialty boards whose certification processes have been recognized by the department, the NRC or an agreement state will be posted on the NRC's web site at www.nrc.gov.
(b) Has completed a structured educational program consisting of all the following:
1. 200 hours of classroom and laboratory training in all the following areas:
a. Radiation physics and instrumentation.
b. Radiation protection.
c. Mathematics pertaining to the use and measurement of radioactivity.
d. Radiation biology.
e. Radiation dosimetry.
2. One year of full−time radiation safety experience under the supervision of the individual identified as the radiation safety officer on a department, NRC or another agreement state license or a permit issued by a NRC master material licensee that authorizes similar types of uses of radioactive material involving all the following:
a. Shipping, receiving, and performing related radiation surveys.
b. Using and performing checks for proper operation of instruments used to determine the activity of dosages, survey meters and instruments used to measure radionuclides.
c. Securing and controlling radioactive material.
d. Using administrative controls to avoid mistakes in the administration of radioactive material.
e. Using procedures to prevent or minimize radioactive contamination and using proper decontamination procedures.
f. Using emergency procedures to control radioactive material.
g. Disposing of radioactive material.
(c) Is any one of the following:
1. A medical physicist who has been certified by a specialty board whose certification process has been recognized by the department, NRC or another agreement state under sub. (8) (a) and has experience in radiation safety for similar types of use of radioactive material for which the licensee is seeking the approval of the individual as radiation safety officer.
2. An authorized user, authorized medical physicist or authorized nuclear pharmacist identified on the licensee's license and has experience with the radiation safety aspects of similar types of use of radioactive material for which the individual has radiation safety officer responsibilities.
(8) TRAINING FOR AN AUTHORIZED MEDICAL PHYSICIST. Except as provided in sub. (10), a licensee shall require the authorized medical physicist to have training for the type of use for which authorization is sought that includes hands−on device operation, safety procedures, clinical use, and the operation of a treatment planning system. This training requirement may be satisfied by satisfactorily completing either a training program provided by the vendor or by training supervised by an authorized medical physicist authorized for the type of use for which the individual is seeking authorization. A licensee shall also require the authorized medical physicist to be an individual who has obtained written attestation under sub. (12) (b) and meets either of the following requirements:
(a) Certified by a specialty board whose certification process has been recognized by the department, the NRC or an agreement state. To be recognized, a specialty board shall require all candidates for certification to have all of the following:
1. a. A master's or doctor's degree in physics, medical physics, other physical science, engineering, or applied mathematics from an accredited college or university.
b. Attained two years full−time practical training and/or supervised experience in medical physics under the supervision of a medical physicist who is certified in medical physics by a specialty board recognized by the department, the NRC or an agreement state or in clinical radiation facilities providing high−energy, external beam therapy (photons and electrons with energies greater than or equal to 1 million electron

Unofficial Text (See Printed Volume). Current through date and Register shown on Title Page.

volts) and brachytherapy services under the direction of physicians who meet the requirements for authorized users in s. DHS 157.65 (8) or s. DHS 157.67 (17).

c. Passed an examination, administered by diplomates of the specialty board, that assesses knowledge and competence in clinical radiation therapy, radiation safety, calibration, quality assurance, and treatment planning for external beam therapy, brachytherapy, and stereotactic radiosurgery.

Note: Specialty boards whose certification processes have been recognized by the department, the NRC or an agreement state will be posted on the NRC's web site at www.nrc.gov.

(b) Holds a master's or doctorate degree in physics, medical physics, other physical science, engineering, or applied mathematics from an accredited college or university; and completion of one year of full−time training in medical physics and an additional year of full−time work experience under the supervision of an individual who meets the requirements for an authorized medical physicist for the type of use for which the individual is seeking authorization. This training and work experience shall be conducted in clinical radiation facilities that provide high energy, external beam therapy (photons and electrons with energies greater than or equal to 1 million electron volts) and brachytherapy services and shall include all of the following:

1. Performing sealed source leak tests and inventories.
2. Performing decay corrections.
3. Performing full calibration and periodic spot checks of external beam treatment units, stereotactic radiosurgery units, and remote afterloading units as applicable.
4. Conducting radiation surveys around external beam treatment units, stereotactic radiosurgery units, and remote afterloading units as applicable.

(9) TRAINING FOR AN AUTHORIZED NUCLEAR PHARMACIST. Except as provided in sub. (10), the licensee shall require the authorized nuclear pharmacist to be a pharmacist who has obtained written attestation under sub. (12) (c) and meets either of the following requirements:

(a) Is certified by a specialty board whose certification process has been recognized by the department, the NRC or an agreement state and who has obtained written attestation, signed by a preceptor authorized nuclear pharmacist, that the individual has satisfactorily completed the requirements in sub. (12) (c) and has achieved a level of competency sufficient to independently operate a nuclear pharmacy. To be recognized, a specialty board shall require all candidates for certification to have all of the following:

1. Graduated from a pharmacy program accredited by the American council on pharmaceutical education or have passed the foreign pharmacy graduate examination committee examination.
2. A current, active license to practice pharmacy.
3. Evidence of having acquired at least 4000 hours of training and experience in nuclear pharmacy practice. Academic training may be substituted for no more than 2000 hours of the required training and experience.
4. Evidence of having passed an examination in nuclear pharmacy administered by diplomates of the specialty board, that assesses knowledge and competency in the procurement, compounding, quality assurance, dispensing, distribution, health and safety, radiation safety, provision of information and consultation, monitoring patient outcomes, research and development.

Note: Specialty boards whose certification processes have been recognized by the department, the NRC or an agreement state will be posted on the NRC's web site at www.nrc.gov.

(b) Has completed 700 hours in a structured educational program including all of the following requirements:

1. Two hundred hours of classroom and laboratory training covering all of the following areas:

a. Radiation physics and instrumentation.
b. Radiation protection.
c. Mathematics pertaining to the use and measurement of radioactivity.
d. Chemistry of radioactive material for medical use.
e. Radiation biology.

2. Supervised practical experience in a nuclear pharmacy involving all the following:

a. Shipping, receiving and performing related radiation surveys.
b. Using and performing checks for proper operation of instruments used to determine the activity of dosages, survey meters, and if appropriate, instruments used to measure alpha−emitting or beta−emitting radionuclides.
c. Calculating, assaying and safely preparing dosages for patients or human research subjects.
d. Using administrative controls to avoid medical events in the administration of radioactive material.

Unofficial Text (See Printed Volume). Current through date and Register shown on Title Page.

e. Using procedures to prevent or minimize radioactive contamination and using proper decontamination procedures.

(10) TRAINING FOR EXPERIENCED RADIATION SAFETY OFFICER, TELETHERAPY OR MEDICAL PHYSICIST, AUTHORIZED USER AND NUCLEAR PHARMACIST.

(a)An individual identified as a radiation safety officer, a teletherapy or authorized medical physicist, ~~an authorized medical physicist~~ or a nuclear pharmacist on a department, NRC or another agreement state license, the permit issued by a licensee of broad scope or the permit issued by an NRC master material licensee before October 24, 2002 need not comply with the training requirements of subs. (7) to (9), respectively.

(b) An individual identified as a Radiation Safety Officer, an authorized medical physicist, or an authorized nuclear pharmacist on a department, NRC or another agreement state license, the permit issued by a licensee of broad scope or the permit issued by NRC master material licensee between October 24, 2002 and April 29, 2005 need not comply with the training requirements of ss. DHS 157.61 (7), (8), or (9).

~~(b)~~ (c) A physician, dentist or podiatrist identified as an authorized user for the medical, dental or podiatric use of radioactive material on a department, NRC or another agreement state license, the permit issued by a licensee of broad scope or the permit issued by an NRC master material licensee who performs only those medical uses for which they are authorized need not comply with the training requirements of ss. DHS 157.63 to 157.67.

(11) RECENTNESS OF TRAINING. The training and experience specified in this section and ss. DHS 157.63 to 157.67 shall have been completed within 7 years preceding the date of license application. If the training and experience specified in this section and ss. DHS 157.63 to 157.67 have not been completed within 7 years preceding the date of license application, additional related continuing education and experience shall be required.

(12) WRITTEN ATTESTATION. (a) *Radiation safety officer.* The licensee shall ensure that an individual fulfilling the responsibilities of the radiation safety officer has obtained written attestation, signed by a preceptor radiation safety officer, that the individual has satisfactorily completed the requirements in sub. (7) (a) 1. a. and b., 2. a. and b., (b), or (c), has training in the radiation safety, regulatory issues, and emergency procedures for the types of use for which a licensee seeks approval and has achieved a level of radiation safety knowledge sufficient to independently function as a radiation safety officer for a medical use of radioactive material.

(b) *Authorized medical physicist.* A licensee shall ensure that the individual has obtained written attestation that the individual has satisfactorily completed the requirements in sub. (8) (a) 1. a. and b. or (b), has training for the type of use for which authorization is sought that includes hands−on device operation, safety procedures, clinical use, and the operation of a treatment planning system and has achieved a level of competency sufficient to function independently as an authorized medical physicist for each type of therapeutic medical unit for which the individual is requesting authorized medical physicist status. The written attestation shall be signed by a preceptor authorized medical physicist who meets the requirements in sub. (8), or equivalent agreement state requirements for an authorized medical physicist for each type of therapeutic medical unit for which the individual is requesting authorized medical physicist status.

(c) *Authorized nuclear pharmacist.* A licensee shall ensure that the individual has obtained written attestation, signed by a preceptor authorized nuclear pharmacist, that the individual has satisfactorily completed the requirements in sub. (9) (a) or (b) and has achieved a level of competency sufficient to function independently as an authorized nuclear pharmacist.

History: CR 01−108: cr. Register July 2002 No. 559, eff. − see Note at the start of the chapter; **CR 06−021: am. (1) (g), r. and recr. (7) to (10), cr. (12) Register October 2006 No. 610, eff. 11−1−06.**

DHS 157.62 Technical requirements. (1) POSSESSION, USE AND CALIBRATION OF INSTRUMENTS TO MEASURE THE ACTIVITY OF UNSEALED RADIOACTIVE MATERIALS.

(a) For direct measurements performed under sub. (3), a licensee shall possess and use instrumentation to measure the activity of unsealed radioactive materials prior to administration of unsealed radioactive materials to each patient or human research subject.

(b) A licensee shall calibrate the instrumentation required in par. (a) according to nationally recognized standards or the manufacturer's instructions.

(c) A licensee shall retain a record of each instrument calibration required by this subsection under s. DHS 157.71 (6).

Unofficial Text (See Printed Volume). Current through date and Register shown on Title Page.

(2) CALIBRATION OF SURVEY INSTRUMENTS. (a) A licensee shall calibrate the survey instruments used to show compliance with this subchapter and subch. III before first use, at a frequency not to exceed 13 months and following any repair that will affect the calibration.
(b) A licensee shall do all the following:
1. Calibrate all scales with readings up to 10 mSv (1000 mrem) per hour with a radiation source.
2. Calibrate each scale used to show compliance at a sufficient number of readings to determine the response characteristics of the instrument.
3. Conspicuously note on the instrument the date of calibration.
Note: Two separated readings on each scale or decade are typically used used for linear scale instruments.
(c) A licensee may not use survey instruments if the difference between the indicated exposure rate and the calculated exposure rate is more than 20%.
(d) A licensee shall retain a record of each survey instrument calibration under s. DHS 157.71 (7).
(3) DETERMINATION OF DOSAGES OF UNSEALED RADIOACTIVE MATERIAL FOR MEDICAL USE.
(a) A licensee shall determine and record the activity of each dosage prior to medical use.
(b) For a unit dosage, this determination shall be made by using one of the following methods:
1. Direct measurement of radioactivity.
2. A decay correction, based on the measurement made by either of the following:
a. A manufacturer or preparer licensed under s. DHS 157.13 (4) (i) or by NRC or another agreement state.
b. An NRC or other agreement state licensee only for use in research in accordance with an RDRC protocol or and IND protocol accepted by FDA.
c. A PET radioactive drug producer licensed under s. DHS 157.13 (1) (j) or by NRC or another agreement state.
(c) For other than unit dosages, the determination of dosages of unsealed radioactive material shall be made through one of the following methods:
1. Direct measurement of radioactivity.
2. A combination of direct measurements of radioactivity and mathematical calculations.
3. A combination of volumetric measurements and mathematical calculations, based on the measurement made by a manufacturer or preparer licensed under s. DHS 157.13 (4) (i), a PET radioactive drug producer licensed under s. DHS 157.13 (1) (j), or equivalent NRC or other agreement state requirements.
(d) Unless otherwise directed by the authorized user, a licensee may not use a dosage if the dosage differs from the prescribed dosage by more than 20% or if the dosage does not fall within the prescribed dosage range.
(e) A licensee shall retain a record of the dosage determination required by this subsection under s. DHS 157.71 (8).
(4) AUTHORIZATION FOR CALIBRATION, TRANSMISSION AND REFERENCE SOURCES. Any person authorized by s. DHS 157.13 (5) for medical use of radioactive material may receive, possess and use the following radioactive material for check, calibration, transmission and reference use:
(a) A sealed source that does not exceed 1.11 GBq (30 mCi) that is manufactured and distributed by a person licensed under s. DHS 157.13 (4) (j) or equivalent NRC or agreement state regulations or redistributed by a person authorized to redistribute sealed sources, provided that the redistributed sealed sources are in the original packaging and shielding and are accompanied by the manufacturers approved instructions.
(b) Any radioactive material with a half−life not longer than 120 days in individual amounts not to exceed 0.555 GBq (15 mCi).
(c) Any radioactive material with a half−life longer than 120 days in individual amounts not to exceed the smaller of 7.4 MBq (200 µCi) or 1000 times the quantities in Appendix F.
(d) Technetium−99m in amounts as needed.
(5) REQUIREMENTS FOR POSSESSION OF SEALED SOURCES AND BRACHYTHERAPY SOURCES. (a) A licensee in possession of any sealed source or brachytherapy source shall follow the radiation safety and handling instructions supplied by the manufacturer.
(b) A licensee in possession of a sealed source shall do both the following:
1. Test the source for leakage before its first use unless the licensee has a certificate from the supplier indicating that the source was tested within 6 months before transfer to the licensee.

Unofficial Text (See Printed Volume). Current through date and Register shown on Title Page.

2. Test the source for leakage at intervals not to exceed 6 months or at other intervals approved by the department, NRC or another agreement state in the sealed source and device registry.
(c) To satisfy the leak test requirements of this section, a licensee shall measure the sample so that the leakage test may detect the presence of 185 Bq (0.005 μCi) of radioactive material on the sample.
(d) A licensee shall retain leakage test records under s. DHS 157.71 (9).
(e) If the leakage test reveals the presence of 185 Bq (0.005 μCi) or more of removable contamination, a licensee shall do both the following:
1. Immediately withdraw the sealed source from use and store, dispose or cause it to be repaired under the requirements in subchs. II and III.
2. File a report to the department within 5 working days of the leakage test as specified under s. DHS 157.72 (3).
(f) A licensee need not perform a leakage test on any of the following sources:
1. A source containing only radioactive material with a half−life of less than 30 days.
2. A source containing only radioactive material as a gas.
3. A source containing 3.7 MBq (100 μCi) or less of beta or gamma−emitting material or 0.37 MBq (10 μCi) or less of alpha−emitting material.
4. A source stored and not being used. A licensee shall, however, test each source for leakage before any use or transfer unless it has been leakage−tested within 6 months before the date of use or transfer.
5. Seeds of iridium−192 encased in intact nylon ribbon.
(g) A licensee in possession of sealed sources or brachytherapy sources, except for gamma stereotactic radiosurgery sources, shall conduct a semi−annual physical inventory of all such sources in its possession. A licensee shall retain each inventory record under s. DHS 157.71 (9).
(6) LABELLING OF VIALS AND SYRINGES. Each syringe and vial that contains a radioactive drug containing radioactive material shall be labeled to identify the radioactive drug. Each syringe shield and vial shield shall also be labeled unless the label on the syringe or vial is visible when shielded.
(7) SURVEYS FOR AMBIENT RADIATION EXPOSURE RATE. (a) Except as provided in par. (b), a licensee shall survey with a radiation detection survey instrument at the end of each day of use all areas where radioactive drugs containing radioactive material requiring a written directive were prepared for use or administered.
(b) A licensee need not perform the surveys required under par. (a) in an area where patients or human research subjects are confined when the patients or human research subjects cannot be released under sub. (8).
(c) A licensee shall retain a record of each survey under s. DHS 157.71 (10).
(8) RELEASE OF INDIVIDUALS CONTAINING RADIOACTIVE DRUGS OR IMPLANTS CONTAINING RADIOACTIVE MATERIAL. (a) A licensee may authorize the release from its control of any person who has been administered radioactive drugs or implants containing radioactive material if the total effective dose equivalent to any other person from exposure to the released individual is not likely to exceed 5 mSv (0.5 rem).
Note: WISREG 1556, Vol. 9, Guidance for Medical Use of Radioactive Material describes methods for calculating doses to other individuals and contains tables of activities not likely to cause doses exceeding 5 mSv (0.5 Rem). It is available from the following website: http://DHS.wisconsin.gov/dph_beh/RadioactiveMat/Index. htm.
(b) A licensee shall provide the released person or the person's parent or guardian with instructions, including written instructions, on actions recommended to maintain doses to other persons as low as is reasonably achievable if the total effective dose equivalent to any other person is likely to exceed one mSv (0.1 rem). If the total effective dose equivalent to a breast−feeding infant or child could exceed one mSv (0.1 rem) assuming there were no interruption of breast−feeding, the instructions shall also include all the following:
1. Guidance on the interruption or discontinuation of breast−feeding.
2. Any information on the potential consequences of failure to follow the guidance.
(c) A licensee shall maintain a record, as required by s. DHS 157.71 (11), of the basis for authorizing the release of an individual, under par. (a).
(d) A licensee shall maintain a record of instructions provided to breast−feeding women under par. (b) according to record retention requirements of s. DHS 157.71 (11) (b).
(9) PROVISION OF MOBILE MEDICAL SERVICE. (a) A licensee providing mobile medical service shall do all of the following:

Unofficial Text (See Printed Volume). Current through date and Register shown on Title Page.

1. Obtain a letter signed by the management of each client for which services are rendered by the licensee that permits the use of radioactive material at the client's address and clearly delineates the authority and responsibility of the licensee and the client.
2. Check instruments used to measure the activity of unsealed radioactive materials for proper function before medical use at each client's address or on each day of use, whichever is more frequent. The check for proper function shall include a test to verify accurate calibration using a known radioactive source.
3. Check survey instruments for proper operation with a dedicated check source before use at each client's address.
4. Before leaving a client's address, survey all areas of use to ensure compliance with the requirements in subch. III.
(b) A mobile medical service may not have radioactive material delivered from the manufacturer or the distributor to the client unless the client has a license allowing possession of the radioactive material. Radioactive material delivered to the client shall be received and handled in conformance with the client's license.
(c) A licensee providing mobile medical services shall retain the letter required in par. (a) 1. and the record of each survey required in s. DHS 157.71 (12) (b).
(10) DECAY−IN−STORAGE. (a) A licensee may hold radioactive material with a physical half−life of less than 120 days for decay−in−storage before disposal without regard to its radioactivity if the licensee does both the following:
1. Monitors radioactive material at the surface before disposal and determines that its radioactivity cannot be distinguished from the background radiation level with an appropriate radiation detection survey meter set on its most sensitive scale and with no interposed shielding.
2. Removes or obliterates all radiation labels except for material that will be handled as biomedical waste after it has been released.
(b) A licensee shall retain a record of each disposal permitted under s. DHS 157.71 (13).
History: CR 01−108: cr. Register July 2002 No. 559, eff. − see Note at the start of the chapter; corrections in (9) (c) and (10) (b) made under s. 13.93 (2m) (b) 7., Stats., Register July 2002 No. 559; **CR 06−021: am. (2) (a), (3) (b) 2. a., (4) (intro.) and (8) (d) Register October 2006 No. 610, eff. 11−1−06.**

DHS 157.63 Unsealed radioactive material – written directive not required.

(1) USE OF UNSEALED RADIOACTIVE MATERIAL FOR UPTAKE, DILUTION AND EXCRETION STUDIES FOR WHICH A WRITTEN DIRECTIVE IS NOT REQUIRED. A licensee may use for uptake, dilution or excretion studies any unsealed radioactive material, except in quantities that require a written directive under s. DHS 157.61 (4), prepared for medical use that meets any of the following requirements:
Note: Uptake, dilution and excretion studies determine the amount of radioactive material absorbed by a patient and the patient's ability to excrete the remainder of the radioactive material.
(a) Is obtained from ~~a manufacturer or preparer licensed under s. DHS 157.13 (4) (i), or equivalent NRC or other agreement state requirements.~~ either of the following:
1. A manufacturer or preparer licensed under s. DHS 157.13 (4) (i), or equivalent NRC or other agreement state requirements.
2. A PET radioactive drug producer licensed under s. DHS 157.13 (1) (j), or equivalent NRC or other agreement state requirements.
(b) Is prepared by, excluding production of PET radionuclides, any of the following:
1. An authorized nuclear pharmacist.
2. A physician who is an authorized user and who meets the requirements in sub. (5), or sub. (5) (c) 2. g. and s. DHS 157.64 (4).
3. An individual under the supervision, as specified in s. DHS 157.61 (10), of the authorized nuclear pharmacist in subd.1. or the physician in subd. 2.
(c) Is obtained from an NRC or agreement state licensee for use in research under a radioactive drug research committee−approved protocol or an investigational new drug protocol accepted by the FDA.
(d) Is prepared by the licensee for use in research under a radioactive drug research committee−approved application or an investigational new drug protocol accepted by the FDA.
Note: Information on radioactive drugs or investigational new drug protocols may be obtained from the following FDA website: http://www.fda.gov/cber/ind/indpubs. htm
(2) USE OF UNSEALED RADIOACTIVE MATERIAL FOR IMAGING AND LOCALIZATION STUDIES FOR WHICH A WRITTEN DIRECTIVE IS NOT REQUIRED. A licensee may use for imaging

Unofficial Text (See Printed Volume). Current through date and Register shown on Title Page.

and localization studies any unsealed radioactive material, except in quantities that require a written directive under s. DHS 157.61 (4), prepared for medical use that meets any of the following requirements:
(a) Is obtained from ~~a manufacturer or preparer licensed under s. DHS 157.13 (4) (i) or equivalent NRC or agreement state requirements.~~ either of the following:
1. A manufacturer or preparer licensed under s. DHS 157.13 (4) (i), or equivalent NRC or other agreement state requirements.
2. A PET radioactive drug producer licensed under s. DHS 157.13 (1) (j), or equivalent NRC or other agreement state requirements.
(b) Is prepared by, excluding production of PET radionuclides, any of the following:
1. An authorized nuclear pharmacist.
2. A physician who is an authorized user and who meets the requirements in sub. (5), or s. DHS 157.64 (4) and sub. (5) (c) 2. g.
3. An individual under the supervision, as specified in s. DHS 157.61 (10), of the authorized nuclear pharmacist in subd.1., or the physician in subd. 2.
(c) Is obtained from a NRC or agreement state licensee for use in research under a radioactive drug research committee−approved protocol or an investigational new drug protocol accepted by the FDA.
(d) Is prepared by the licensee for use in research under a radioactive drug research committee−approved application or an investigational new drug protocol accepted by the FDA.
(3) PERMISSIBLE RADIONUCLIDE CONTAMINANTS.
(a) A licensee may not administer to humans a radioactive drug containing more than the following:
1. 0.15 kilobecquerel ~~(0.15 microcurie)~~ of molybdenum−99 per megabecquerel of technetium−99m (0.15 microcure of molybdenum-99 per 1 millicure of technetium 99m).
2. 0.02 kilobecquerel of strontium−82 per megabecquerel of rubidium−82 chloride injection (0.02 microcurie of strontium-82 per 1 millicurie of rubidium-82 chloride injection).
3. 0.2 kilobecquerel of strontium−85 per megabecquerel of rubidium−82 chloride injection (0.02 microcurie of strontium-85 per 1 millicurie of rubidium-82 chloride injection).
(b) A licensee that prepares radioactive drugs from radionuclide generators shall do all the following:
1. Measure the concentration of radionuclide contaminant in the first eluate after receipt of a molybdenum−99/technetium−99m generator.
2. Measure the concentration of radionuclide contaminant in each eluate or extract, as appropriate for other generator systems.
(c) A licensee that must measure radionuclide contaminant concentration shall retain a record of each measurement under s. DHS 157.71 (14).
(4) TRAINING FOR UPTAKE, DILUTION AND EXCRETION STUDIES. Except as provided in s. DHS 157.61 (10), a licensee shall require an authorized user of unsealed radioactive material for the uses authorized under sub. (1) to have obtained written attestation under sub. (6) (a) and to be a physician who meets any of the following requirements:
(a) Is certified by a medical specialty board whose certification process has been recognized by the department, the NRC or an agreement state. To be recognized, a specialty board shall require all candidates for certification to do all of the following:
1. Complete 60 hours of training and experience in basic radionuclide handling techniques and radiation safety applicable to the medical use of unsealed radioactive material for uptake, dilution, and excretion studies that includes the topics listed in par.(c).
2. Pass an examination, administered by diplomates of the specialty board, that assesses knowledge and competence in radiation safety, radionuclide handling, and quality control.
Note: Specialty boards whose certification processes have been recognized by the department, the NRC or an agreement state will be posted on the NRC's web site at www.nrc.gov.
(b) Is an authorized user under sub. (5), s. DHS 157.64 (4), or equivalent agreement state requirements.
(c) Has completed 60 hours of training and experience, including a minimum of 8 hours of classroom and laboratory training, in basic radionuclide handling techniques applicable to the medical use of unsealed radioactive material for uptake, dilution and excretion studies that includes all the following:
1. Classroom and laboratory training in all the following areas:
a. Radiation physics and instrumentation.
b. Radiation protection.
c. Mathematics pertaining to the use and measurement of radioactivity.
d. Chemistry of radioactive material for medical use.

Unofficial Text (See Printed Volume). Current through date and Register shown on Title Page.

e. Radiation biology.
2. Work experience, under the supervision of an authorized user who meets the requirements in this subsection, sub. (5), s. DHS 157.64 (4), or equivalent agreement state requirements, involving all the following:
a. Ordering, receiving and unpacking radioactive materials safely and performing the related radiation surveys.
b. Performing quality control procedures on instruments used to determine the activity of dosages and performing checks for proper operation of survey meters.
c. Calculating, measuring and safely preparing patient or human research subject dosages.
d. Using administrative controls to prevent a medical event involving the use of unsealed radioactive material.
e. Using procedures to contain spilled radioactive material safely and using proper decontamination procedures.
f. Administering dosages of radioactive drugs to patients or human research subjects.
(5) TRAINING FOR IMAGING AND LOCALIZATION STUDIES. Except as provided in s. DHS 157.61 (10), a licensee shall require an authorized user of unsealed radioactive material for the uses authorized under sub. (2) to have obtained written attestation under sub. (6) (b) and to be a physician who meets any of the following requirements:
(a) Is certified by a medical special board whose certification process has been recognized by the department, the NRC or an agreement state. To be recognized, a specialty board shall require all candidates for certification to do both of the following:
1. Complete 700 hours of training and experience in basic radionuclide handling techniques and radiation safety applicable to the medical use of unsealed radioactive material for ~~uptake, dilution, and excretion~~ imaging and localization studies that includes the topics listed in par. (c) 1. and 2.
2. Pass an examination, administered by diplomates of the specialty board, which assesses knowledge and competence in radiation safety, radionuclide handling, and quality control.
Note: Specialty boards whose certification processes have been recognized by the department, the NRC or an agreement state will be posted on the NRC's web site at www.nrc.gov.
(b) Is an authorized user under s. DHS 157.64 (4) and meets the requirements in par. (c) 2. g., or equivalent agreement state requirements.
(c) Has completed 700 hours of training and experience, including a minimum of 80 hours of classroom and laboratory training, in basic radionuclide handling techniques applicable to the medical use of unsealed radioactive material for imaging and localization studies that includes, at a minimum, all the following:
1. Classroom and laboratory training in all the following areas:
a. Radiation physics and instrumentation.
b. Radiation protection.
c. Mathematics pertaining to the use and measurement of radioactivity.
d. Chemistry of radioactive material for medical use.
e. Radiation biology.
2. Work experience, under the supervision of an authorized user, who meets the requirements in this subsection or subd. 2. g. and s. DHS 157.64 (4) or equivalent agreement state requirements, involving all the following:
a. Ordering, receiving and unpacking radioactive materials safely and performing the related radiation surveys.
b. Performing quality control procedures on instruments used to determine the activity of dosages and performing checks for proper operation of survey meters.
c. Calculating, measuring and safely preparing patient or human research subject dosages.
d. Using administrative controls to prevent a medical event involving the use of unsealed radioactive material.
e. Using procedures to safely contain spilled radioactive material and using proper decontamination procedures.
f. Administering dosages of radioactive drugs to patients or human research subjects.
g. Eluting generator systems appropriate for preparation of radioactive drugs for imaging and localization studies, measuring and testing the eluate for radionuclidic purity, and processing the eluate with reagent kits to prepare labeled radioactive drugs.

Unofficial Text (See Printed Volume). Current through date and Register shown on Title Page.

Note: Eluting generator systems are a family of radioactive material devices used to extract useful radioactive materials by passing sterile fluid through a column of the parent material. The resulting mixture of fluid and radioactive material, known as the eluate, is used in the diagnostic procedures. These generators are used to produce Tc−99m, Ga−67 or Rb−82.

(6) WRITTEN ATTESTATION. (a) *Unsealed radioactive material for uptake, dilution, and excretion studies for which a written directive is not required.* A licensee shall require an authorized user of unsealed radioactive material for the uses authorized under sub. (1) to have obtained written attestation, signed by a preceptor authorized user who meets the requirements of subs. (4) ~~and~~ or (5), s. DHS 157.64 (4), or equivalent agreement state requirements, that the individual has satisfactorily completed the requirements of sub. (4) (a) 1. or (c) and has achieved a level of competency sufficient to function independently as an authorized user for the medical uses authorized under sub. (1).

(b) *Unsealed radioactive material for imaging and localization studies for which a written directive is not required.* A licensee shall require an authorized user of unsealed radioactive material for uses under sub. (2) to have written attestation, signed by a preceptor authorized user who meets the requirements in sub. (5) or s. DHS 157.64 (4), or equivalent agreement state requirements, that the individual has satisfactorily completed the requirements in sub. (5) (a) 1. or (c) and has achieved a level of competency sufficient to function independently as an authorized user for the medical uses authorized under subs. (1) and (2).

History: CR 01−108: cr. Register July 2002 No. 559, eff. − see Note at the start of the chapter; correction in (2) (a) made under s. 13.93 (2m) (b) 7., Stats., Register July 2002 No. 559; **CR 06−021: r. and recr. (1) (b), (2) (b), (3) to (5), cr. (6) Register October 2006 No. 610, eff. 11−1−06.**

DHS 157.64 Unsealed radioactive material − written directive required.

(1) USE OF UNSEALED RADIOACTIVE MATERIAL FOR WHICH A WRITTEN DIRECTIVE IS REQUIRED. A licensee may use any unsealed radioactive material prepared for medical use and for which a written directive is required that is any of the following:

(a) Obtained from a manufacturer or preparer licensed under s. DHS 157.13 (4) (i), a PET radioactive drug producer licensed under s. DHS 157.13(1)(j), or equivalent NRC or other agreement state requirements.

(b) ~~Prepared~~ Excluding production of PET radionuclides, is prepared by any of the following:

1. An authorized nuclear pharmacist.
2. A physician who is an authorized user and who meets the requirements specified in sub. (4) or s. DHS 157.63 (5).
3. An individual under the supervision of either an authorized nuclear pharmacist or physician who is an authorized user as specified in s. DHS 157.61 (3).

(c) Obtained from an NRC or agreement state licensee for use in research under an investigational new drug application accepted by FDA.

(d) Prepared by the licensee for use under an investigational new drug protocol accepted by FDA.

(2) SAFETY INSTRUCTION. In addition to the requirements of subch. X, a licensee shall do all the following:

(a) Provide radiation safety instruction, initially and at least annually, to personnel caring for patients or human research subjects who have received therapy with a drug containing radioactive material and cannot be released under s. DHS 157.62 (8). The instruction shall be commensurate with the duties of the personnel and include all the following:

1. Patient or human research subject control.
2. Visitor control, including both the following:
a. Routine visitation to hospitalized individuals under s. DHS 157.23 (1) (a) 1.
b. Visitation authorized under s. DHS 157.23 (1) (b).
3. Contamination control.
4. Waste control.
5. Notification of the radiation safety officer or his or her designee and the authorized user if the patient or the human research subject dies or has a medical emergency.

(b) Retain a record of individuals receiving instruction under s. DHS 157.71 (15).

(3) SAFETY PRECAUTIONS. (a) For each patient or human research subject who cannot be released under s. DHS 157.62 (8), a licensee shall do all the following:

1. Quarter the patient or the human research subject in one of the following:
a. A private room with a bathroom.
b. A room, with a bathroom, with another person who also has received therapy with a radioactive drug containing radioactive material and who cannot be released under s. DHS 157.62 (8).

Unofficial Text (See Printed Volume). Current through date and Register shown on Title Page.

2. Visibly post a "Radioactive Materials" sign on the door of a patient's or the human research subject's room and note on the door or in the patient's or human research subject's chart where and how long visitors may stay in the patient's or the human research subject's room.
3. Either monitor material and items removed from the patient's or the human research subject's room to determine that their radioactivity cannot be distinguished from the natural background radiation level with a radiation detection survey instrument set on its most sensitive scale and with no interposed shielding or handle such material and items as radioactive waste.
(b) A licensee shall notify the radiation safety officer or his or her designee and the authorized user as soon as possible if the patient or human research subject has a medical emergency and immediately if the patient dies.
(4) TRAINING FOR USE OF UNSEALED RADIOACTIVE MATERIAL FOR WHICH A WRITTEN DIRECTIVE IS REQUIRED. Except as provided in s. DHS 157.61 (10), a licensee shall require an authorized user of unsealed radioactive material for the uses authorized under sub. (1) to have obtained written attestation under sub. (8) (a) and to be a physician who meets either of the following requirements:
(a) Is certified by a medical specialty board whose certification process is recognized by the department, the NRC or an agreement state and who meets the requirements of par. (b) 2. g. To be recognized, a specialty board shall require all candidates for certification to do all of the following:
1. Successfully complete residency training in a radiation therapy or nuclear medicine training program or a program in a related medical specialty. These residency training programs shall include 700 hours of training and experience as described in par. (b) 1. and (b) 2. a. , b., c., d., and e. Eligible training programs shall be approved by the residency review committee of the accreditation council for graduate medical education, the royal college of physicians and surgeons of Canada, or the committee on post−graduate training of the American osteopathic association.
2. Pass an examination, administered by diplomates of the specialty board, which tests knowledge and competence in radiation safety, radionuclide handling, quality assurance, and clinical use of unsealed radioactive material for which a written directive is required.
Note: Specialty boards whose certification processes have been recognized by the department, the NRC or an agreement state will be posted on the NRC's web site at www.nrc.gov.
(b) Has completed 700 hours of certified training and experience, including a minimum of 200 hours of classroom and laboratory training, in basic radionuclide handling techniques applicable to the medical use of unsealed radioactive material requiring a written directive that includes all the following:
1. Classroom and laboratory training in all the following areas:
a. Radiation physics and instrumentation.
b. Radiation protection.
c. Mathematics pertaining to the use and measurement of radioactivity.
d. Chemistry of radioactive material for medical use.
e. Radiation biology.
2. Work experience under the supervision of an authorized user who meets the requirements in this subsection or equivalent agreement state requirements. A supervising authorized user who meets the requirements of this paragraph shall also have experience under subd. 2. g. in administering dosages in the same dosage category or categories as the individual requesting authorized user status. The work experience shall involve all of the following:
a. Ordering, receiving and unpacking radioactive materials safely and performing the related radiation surveys.
b. Performing quality control procedures on instruments used to determine the activity of dosages, and performing checks for proper operation of survey meters.
c. Calculating, measuring, and safely preparing patient or human research subject dosages.
d. Using administrative controls to prevent a medical event involving the use of unsealed radioactive material.
e. Using procedures to contain spilled radioactive material safely.
f. Using proper decontamination procedures.
g. Administering dosages of radioactive drugs to patients or human research subjects involving a minimum of 3 cases in each of the following categories for which the individual is requesting authorized user status: oral administration of less than or equal to 1.22 GBq (33 millicurie) of sodium iodide I−131 for which a written directive is required; oral administration of greater than 1.22 GBq (33 millicuries) of sodium iodide I−131; parenteral administration of any beta emitter or a photon−emitting radionuclide with a photon

Unofficial Text (See Printed Volume). Current through date and Register shown on Title Page.

energy less than 150 keV, for which a written directive is required; and/or parenteral administration of any other radionuclide for which a written directive is required. Experience with at least 3 cases of oral administration of greater than 1.22 GBq (33 millicuries) of I−131 also satisfies the requirement for experience with 3 cases of oral administration of less than or equal to 1.22 GBq (33 millicuries) of I−131.

(5) TRAINING FOR THE ORAL ADMINISTRATION OF SODIUM IODIDE I−131 REQUIRING A WRITTEN DIRECTIVE IN QUANTITIES LESS THAN OR EQUAL TO 1.22 GIGABECQUERELS (33 MILLICURIES). Except as provided in s. DHS 157.61 (10), a licensee shall require an authorized user for the oral administration of sodium iodide I−131 requiring a written directive in quantities less than or equal to 1.22 Gigabecquerels (33 millicuries), to have obtained written attestation under sub. (8) (b) and to be a physician who meets any of the following requirements:

(a) Is certified by a medical specialty board whose certification process includes all of the requirements in par. (c) and whose certification process has been recognized by the department, the NRC or an agreement state.

Note: Specialty boards whose certification processes have been recognized by the department, the NRC or an agreement state will be posted on the NRC's web site at www.nrc.gov.

(b) Is an authorized user under sub. (4) (a) or ~~and~~ (b) for specified uses of I−131 listed in subs. (4) (b) 2. g., and (6), or equivalent agreement state requirements.

(c) Has successfully completed training and work experience, applicable to the medical use of sodium iodide I−131 for procedures requiring a written directive that includes both of the following:

1. Eighty hours of classroom and laboratory training in all of the following areas:

a. Radiation physics and instrumentation.

b. Radiation protection.

c. Mathematics pertaining to the use and measurement of radioactivity.

d. Chemistry of radioactive material for medical use.

e. Radiation biology.

2. Work experience, under the supervision of an authorized user who meets the requirements in sub. (4) (a) or (b), (5) or (6) or equivalent agreement state requirements. A supervising authorized user who meets the requirements in sub. (4) (b) shall also have experience in administering the same category of sodium iodide I−131 use as specified in sub. (4) (b) 2. g. The work experience shall involve all of the following:

a. Ordering, receiving and unpacking radioactive materials safely and performing the related radiation surveys.

b. Performing quality control procedures on instruments used to determine the activity of dosages and performing checks for proper operation of survey meters.

c. Calculating, measuring, and safely preparing patient or human research subject dosages.

d. Using administrative controls to prevent a medical event involving the use of radioactive material.

e. Using procedures to contain spilled radioactive material safely and using proper decontamination procedures.

f. Administering dosages to patients or human research subjects, that includes at least 3 cases involving the oral administration of less than or equal to 1.22 Gigabecquerels (33 millicuries) of sodium iodide I−131.

(6) TRAINING FOR THE ORAL ADMINISTRATION OF SODIUM IODIDE I−131 REQUIRING A WRITTEN DIRECTIVE IN QUANTITIES GREATER THAN 1.22 GIGABECQUERELS (33 MILLICURIES). Except as provided in s. DHS 157.61 (10), a licensee shall require an authorized user for the oral administration of sodium iodide I−131 requiring a written directive in quantities greater than 1.22 Gigabecquerels (33 millicuries) to have obtained written attestation under sub. (8) (c) and to be a physician who meets any of the following requirements:

(a) Is certified by a medical specialty board whose certification process includes all of the requirements in par. (c) and whose certification has been recognized by the department, the NRC or agreement state.

Note: Specialty boards whose certification processes have been recognized by the department, the NRC or an agreement state will be posted on the NRC's web site at www.nrc.gov.

(b) Is an authorized user under sub. (4) (a) or (b) for use of I−131 greater than 1.22 Gigabecquerel (33 millicuries) under sub. (4) (b) 2. g., or equivalent agreement state requirements.

(c) Has successfully completed training and experience, applicable to the medical use of sodium iodide I−131 for procedures requiring a written directive, that includes both of the following:

1. Eighty hours of classroom and laboratory training in all of the following areas:

a. Radiation physics and instrumentation.

b. Radiation protection.

Unofficial Text (See Printed Volume). Current through date and Register shown on Title Page.

c. Mathematics pertaining to the use and measurement of radioactivity.
d. Chemistry of radioactive material for medical use.
e. Radiation biology.
2. Work experience, under the supervision of an authorized user who meets the requirements in sub. (4) (a) or (b), this subsection or equivalent agreement state requirements. A supervising authorized user, who meets the requirements in sub. (4) (b), shall also have experience in administering dosages of I−131 greater than 1.22 Gigabecquerels (33 millicuries) as specified in sub. (4) (b) 2. g. The work experience shall involve all the following:
a. Ordering, receiving and unpacking radioactive materials safely and performing the related radiation surveys.
b. Performing quality control procedures on instruments used to determine the activity of dosages and performing checks for proper operation of survey meters.
c. Calculating, measuring and safely preparing patient or human research subject dosages.
d. Using administrative controls to prevent a medical event involving the use of radioactive material.
e. Using procedures to contain spilled radioactive material safely and using proper decontamination procedures.
f. Administering dosages to patients or human research subjects, that includes at least 3 cases involving the oral administration of greater than 1.22 Gigabecquerels (33 millicuries) of sodium iodide I−131.
(7) TRAINING FOR THE PARENTERAL ADMINISTRATION OF UNSEALED RADIOACTIVE MATERIAL REQUIRING A WRITTEN DIRECTIVE. Except as provided in s. DHS 157.61 (10), a licensee shall require an authorized user for the parenteral administration requiring a written directive to have obtained written attestation under sub. (8) (d) and to be a physician who meets any of the following requirements:
(a) Is an authorized user under sub. (4) for the specific parenteral uses listed in sub. (4) (b) 2. g., or equivalent agreement state requirements.
(b) Is an authorized user under s. DHS 157.65 (8) or 157.67 (17), or equivalent agreement state requirements and who meets the requirements in par. (c) 1. and 2.
(c) Is certified by a medical specialty board whose certification process has been recognized by the department under s. DHS 157.65 (8) or 157.67 (17) or equivalent agreement state requirements; and who meets the following requirements:
1. Has successfully completed 80 hours of classroom and laboratory training, applicable to parenteral administrations, for which a written directive is required, of any beta emitter or any photon−emitting radionuclide with a photon energy less than 150 keV, and/or parenteral administration of any other radionuclide for which a written directive is required. The training shall include all of the following:
a. Radiation physics and instrumentation.
b. Radiation protection.
c. Mathematics pertaining to the use and measurement of radioactivity.
d. Chemistry of radioactive material for medical use.
e. Radiation biology.
2. Has work experience with any beta emitter or any photon−emitting radionuclide with a photon energy less than 150 keV, and/or parenteral administration of any other radionuclide for which a written directive is required. This work experience shall be under the supervision of an authorized user with experience in parenteral administration under sub. (4) (b) 2. g., for which a written directive is required, and who meets the requirements in sub.
(4) or this subsection, or equivalent agreement state requirements. The work experience shall involve all the following:
a. Ordering, receiving, and unpacking radioactive materials safely, and performing the related radiation surveys.
b. Performing quality control procedures on instruments used to determine the activity of dosages, and performing checks for proper operation of survey meters.
c. Calculating, measuring, and safely preparing patient or human research subject dosages.
d. Using administrative controls to prevent a medical event involving the use of unsealed radioactive material.
e. Using procedures to contain spilled radioactive material safely, and using proper decontamination procedures.

Unofficial Text (See Printed Volume). Current through date and Register shown on Title Page.

f. Administering dosages to patients or human research subjects, that include at least 3 cases involving the parenteral administration, for which a written directive is required, of any beta emitter or any photon−emitting radionuclide with a photon energy less than 150 keV and/or at least 3 cases involving the parenteral administration of any other radionuclide, for which a written directive is required.

(8) WRITTEN ATTESTATION. (a) *Unsealed radioactive material for which a written directive is required.* A licensee shall require an authorized user of unsealed radioactive material for the uses authorized under sub. (1) to have obtained written attestation that the individual has satisfactorily completed the requirements in sub. (4) (a) 1. and (b) 2. g., or sub. (4) (b) and has achieved a level of competency sufficient to function independently as an authorized user for the medical uses authorized under sub. (1). The written attestation shall be signed by a preceptor authorized user who meets the requirements in this subsection or equivalent agreement state requirements. The preceptor authorized user, who meets the requirements in sub. (4) (b) shall have experience under sub. (4) (b) 2. g. in administering dosages in the same dosage category or categories as the individual requesting authorized user status.

(b) *Oral administration of sodium iodide I−131 requiring a written directive in quantities less than or equal to 1.22 Gigabecquerels (33 millicuries).* A licensee shall require an authorized user of sodium iodide I−131 for oral administration to have obtained written attestation that the individual has satisfactorily completed the requirements in sub. (5) (c) and has achieved a level of competency sufficient to function independently as an authorized user for medical uses authorized under sub. (1). The written attestation shall be signed by a preceptor authorized user who meets the requirements in sub. (4), (5) or (6), or equivalent agreement state requirements. A preceptor authorized user, who meets the requirements of sub. (4) (b), shall have experience in administering I −131 dosage less than 1.22 Gigabecquerels (33 millicuries) under sub. (4) (b) 2. g.

(c) *Oral administration of sodium iodide I−131 requiring a written directive in quantities greater than 1.22 Gigabecquerels (33 millicuries).* A licensee shall require an authorized user for the oral administration of sodium iodide I−131 requiring a written directive in quantities greater than Gigabecquerels (33 millicuries) to have obtained written attestation that the individual has satisfactorily completed the requirements in sub. (6) (c) and has achieved a level of competency sufficient to function independently as an authorized user under sub. (1). The written attestation shall be signed by a preceptor authorized user who meets the requirements in sub. (4) or (6) or equivalent agreement state requirements. A preceptor authorized user, who meets the requirements of sub. (4) (b), shall have experience in administering dosages of I−131 greater than 1.22 Gigabecquerels (33 millicuries) as specified in sub. (4) (b) 2. g. (d) *Parenteral administration of unsealed radioactive material requiring a written directive.* A licensee shall require an authorized user for the parenteral administration of unsealed radioactive material requiring a written directive to have obtained written attestation that the individual has satisfactorily completed the requirements in sub. (7) (b) or (c) and has achieved a level of competency sufficient to function independently as an authorized user for the parenteral administration of unsealed radioactive material requiring a written directive. The written attestation shall be signed by a preceptor authorized user who meets the requirements in sub. (4), or equivalent agreement state requirements. A preceptor authorized user, who meets the requirements in sub. (4) shall have experience in administering parenteral dosages as specified in sub. (4) (b) 2. g.

History: CR 01−108: cr. Register July 2002 No. 559, eff. − see Note at the start of the chapter; **CR 06−021: r. and recr. (4) to (6), cr. (7) and (8) Register October 2006 No. 610, eff. 11−1−06**.

DHS 157.65 Manual brachytherapy. (1) USE OF SOURCES FOR MANUAL BRACHYTHERAPY. A licensee shall use only brachytherapy sources for therapeutic medical uses under either of the following criteria:

(a) As approved in the sealed source and device registry.

(b) In research under an effective investigational device exemption application accepted by the FDA, provided the requirements of s. DHS 157.61 (6) (a) are met.

(2) SOURCE IMPLANT AND REMOVAL REQUIREMENTS. (a) Immediately after implanting sources in a patient or a human research subject, a licensee shall make a survey to locate and account for all sources that have not been implanted.

(b) Immediately after removing the last temporary implant source from a patient or a human research subject, a licensee shall conduct a survey of the patient or the human research subject with a radiation detection survey instrument, with the sources shielded and outside the room, to confirm that all sources have been removed from the patient.

(c) A licensee shall retain a record of the surveys under s. DHS 157.71 (16).

Unofficial Text (See Printed Volume). Current through date and Register shown on Title Page.

(3) BRACHYTHERAPY SOURCES INVENTORY. (a) A licensee shall maintain accountability at all times for all brachytherapy sources in storage or use.
(b) Promptly after removing sources from a patient or a human research subject, a licensee shall return brachytherapy sources to a secure storage area.
(c) A licensee shall maintain a record of the brachytherapy source accountability under s. DHS 157.71 (17).
(4) SAFETY INSTRUCTION. In addition to the requirements of subch. X, a licensee shall do both of the following:
(a) Provide radiation safety instruction, initially and at least once in each year, at intervals no greater than 13 months, to personnel caring for patients or human research subjects undergoing implant therapy and cannot be released under s. DHS 157.62 (8). To satisfy this requirement, the instruction shall be commensurate with the duties of the personnel and include all of the following:
1. Size and appearance of the brachytherapy sources.
2. Safe handling and shielding instructions.
3. Patient or human research subject control.
4. Visitor control, including both of the following:
a. Routine visitation of hospitalized individuals under s. DHS 157.23 (1) (a) 1.
b. Visitation authorized under s. DHS 157.23 (1) (b).
5. Notification of the radiation safety officer or his or her designee and an authorized user if the patient or the human research subject dies or has a medical emergency that causes the patient's condition to suddenly deteriorate.
(b) Retain a record under s. DHS 157.71 (15) of individuals receiving instruction.
(5) SAFETY PRECAUTIONS. (a) For each patient or human research subject receiving brachytherapy who may not be released under s. DHS 157.62 (8), a licensee shall do both the following:
1. Not quarter the patient or the human research subject in the same room as a person who is not receiving brachytherapy.
2. Visibly post a "Radioactive Materials" sign on the door of the patient's or human research subject's room and note on the door or in the patient's or human research subject's chart where and how long visitors may stay in the patient's or human research subject's room.
(b) A licensee shall have available, near each treatment room, emergency response equipment to respond to a source that is any of the following:
1. Inadvertently dislodged from the patient.
2. Inadvertently lodged within the patient following removal of the source applicators.
(c) A licensee shall notify the radiation safety officer or his or her designee and an authorized user as soon as possible if the patient or human research subject has a medical emergency, and immediately if the patient dies.
(6) CALIBRATION MEASUREMENTS OF BRACHYTHERAPY SOURCES.
(a) Prior to the first medical use of brachytherapy sources, a licensee shall do all the following:
1. Determine the source output or activity using a dosimetry system that meets the requirements of s. DHS 157.67 (6).
2. Determine source positioning accuracy within applicators.
3. Use published protocols accepted by nationally recognized bodies to meet the requirements of subds. 1. and 2.
Note: A licensee may use measurements provided by the source manufacturer or by a calibration laboratory accredited by the American Association of Physicists in Medicine that are made in accordance with par. (a).
(b) A licensee shall mathematically correct the outputs or activities determined in par. (a) for physical decay at intervals consistent with one percent physical decay.
1. For strontium−90 sources for ophthalmic treatments, only an authorized medical physicist may calculate the activity of each source used to determine the treatment times for ophthalmic treatments. The decay shall be based on the activity determined under par. (a).
2. A licensee shall retain a record of the activity of each strontium−90 source under s. DHS 157.71 (28).
(c) A licensee shall retain a record of each calibration under s.DHS 157.71 (18).
(7) THERAPY−RELATED COMPUTER SYSTEMS. A licensee shall perform acceptance testing on the treatment planning system of therapy−related computer systems under published protocols accepted by nationally recognized bodies. At a minimum, the acceptance testing shall include, as applicable, verification of all of the following:
(a) Source−specific input parameters required by the dose calculation algorithm.

Unofficial Text (See Printed Volume). Current through date and Register shown on Title Page.

(b) Accuracy of dose, dwell time and treatment time calculations at representative points.
(c) Accuracy of isodose plots and graphic displays.
(d) Accuracy of the software used to determine radioactive source positions from radiographic images.
Note: An example of a nationally recognized body is the American Association of Physicists in Medicine.

(8) TRAINING FOR USE OF MANUAL BRACHYTHERAPY SOURCES.
Except as provided in s. DHS 157.61 (10), a licensee shall require an authorized user of a manual brachytherapy source for the uses authorized under sub. (1) to have obtained written attestation under sub. (10) (a) and to be a physician who meets either of the following requirements:
(a) Is certified by a medical specialty board whose certification process has been recognized by the department, the NRC or an agreement state. To be recognized, a specialty board shall require all candidates for certification to do all of the following:
1. Successfully complete a minimum of 3 years of residency training in a radiation oncology program approved by the residency review committee of the accreditation council for graduate medical education or royal college of physicians and surgeons of Canada or the committee on post−graduate training of the American osteopathic association.
2. Pass an examination, administered by diplomates of the specialty board, that tests knowledge and competence in radiation safety, radionuclide handling, treatment planning, quality assurance, and clinical use of manual brachytherapy.
Note: Specialty boards whose certification processes have been recognized by the department, the NRC or an agreement state will be posted on the NRC's web site at www.nrc.gov.
(b) Has completed a structured educational program in basic radionuclide handling techniques applicable to the use of manual brachytherapy sources that includes all of the following:
1. Two hundred hours of classroom and laboratory training in all of the following areas:
a. Radiation physics and instrumentation.
b. Radiation protection.
c. Mathematics pertaining to the use and measurement of radioactivity.
d. Radiation biology.
2. Five hundred hours of work experience, under the supervision of an authorized user who meets the requirements in this subsection or equivalent agreement state requirements at a medical institution, involving all of the following:
a. Ordering, receiving and unpacking radioactive materials safely and performing the related radiation surveys.
b. Checking survey meters for proper operation.
c. Preparing, implanting and removing brachytherapy sources.
d. Maintaining running inventories of material on hand.
e. Using administrative controls to prevent a medical event involving the use of radioactive material.
f. Using emergency procedures to control radioactive material.
3. Three years of supervised clinical experience in radiation oncology, under an authorized user who meets the requirements in this subsection or equivalent agreement state requirements, as part of a formal training program approved by the residency review committee for radiation oncology of the accreditation council for graduate medical education or the royal college of physicians and surgeons of Canada or the committee on postdoctoral training of the American osteopathic association. The experience may be obtained concurrently with the supervised work experience required by subd. 2.

(9) TRAINING FOR OPHTHALMIC USE OF STRONTIUM−90. Except as provided in s. DHS 157.61 (10), a licensee shall require an authorized user of strontium−90 for ophthalmic radiotherapy to have obtained written attestation under sub. (10) (b) and be a physician who has had classroom and laboratory training applicable to the use of strontium−90 for ophthalmic radiotherapy, and a period of supervised clinical training in ophthalmic radiotherapy that meets all of the following criteria:
(a) Twenty−four hours of classroom and laboratory training that includes all of the following:
1. Radiation physics and instrumentation.
2. Radiation protection.
3. Mathematics pertaining to the use and measurement of radioactivity.
4. Radiation biology.
(b) Supervised clinical training in ophthalmic radiotherapy under the supervision of an authorized user at a medical institution, clinic, or private practice that includes the use of strontium−90 for the ophthalmic treatment of 5 individuals. The supervised clinical training shall include all of the following:

Unofficial Text (See Printed Volume). Current through date and Register shown on Title Page.

1. Examination of each person to be treated.
2. Calculation of the dose to be administered.
3. Administration of the dose.
4. Follow up and review of each individual's case history.

(10) WRITTEN ATTESTATION. (a) *Manual brachytherapy sources.* A licensee shall require an authorized user of a manual brachytherapy source for the uses authorized under sub. (1) to have obtained written attestation, signed by a preceptor authorized user who meets the requirements in sub. (8), or equivalent agreement state requirements, that the individual has satisfactorily completed the requirements in sub. (8) (a) 1. or (b) and has achieved a level of competency sufficient to function independently as an authorized user of manual brachytherapy sources for the medical uses authorized under sub. (8).

(b) *Ophthalmic use of strontium−90.* A licensee shall require an authorized user for ophthalmic use of strontium−90 to have obtained written attestation, signed by a preceptor authorized user who meets the requirements in this sub. (8) or (9), or equivalent agreement state requirements, that the individual has satisfactorily completed the requirements in sub. (9) (a) and (b) and has achieved a level of competency sufficient to function independently as an authorized user of strontium−90 for ophthalmic use.

History: CR 01−108: cr. Register July 2002 No. 559, eff. − see Note at the start of the chapter; **CR 06−021: am. (1) (intro.) and (6) (a) (intro.), r. and recr. (8) and (9), cr. (10) Register October 2006 No. 610, eff. 11−1−06**.

DHS 157.66 Sealed sources for diagnosis. (1) USE OF SEALED SOURCES FOR DIAGNOSIS. A licensee shall use only sealed sources for diagnostic medical uses as approved in the sealed source and device registry.

Note: The sealed source and device registrations may be obtained from the manufacturer or by writing the department at: Department of Health and Family Services, Radiation Protection Section, P.O. Box 2659, Madison WI 53701−2659.

(2) TRAINING FOR USE OF SEALED SOURCES FOR DIAGNOSIS. Except as provided in s. DHS 157.61 (10), a licensee shall require the authorized user of a diagnostic sealed source for use in a device authorized under sub. (1) to have received training in the use of the device for the uses requested. The licensee shall also require the authorized user to be a physician, dentist or podiatrist who meets either of the following requirements:

(a) Is certified by a specialty board whose certification process includes all of the requirements in par. (b) and whose certification is recognized by the department, the NRC or an agreement state.

Note: Specialty boards whose certification processes have been recognized by the department, the NRC or an agreement state will be posted on the NRC's web site at www.nrc.gov.

(b) Has completed 8 hours of classroom and laboratory training in basic radionuclide handling techniques specifically applicable to the use of the device that includes all of the following:

1. Radiation physics and instrumentation.
2. Radiation protection.
3. Mathematics pertaining to the use and measurement of radioactivity.
4. Radiation biology.

History: CR 01−108: cr. Register July 2002 No. 559, eff. − see Note at the start of the chapter; **CR 06−021: r. and recr. (2) Register October 2006 No. 610, eff. 11−1−06**.

DHS 157.67 Photon emitting remote afterloader, teletherapy and gamma stereotactic radiosurgery units. (1) USE OF A SEALED SOURCE IN A REMOTE AFTERLOADER, TELETHERAPY OR GAMMA STEREOTACTIC RADIOSURGERY UNIT. A licensee shall use sealed sources in photon emitting remote afterloader units, teletherapy units or gamma stereotactic units for therapeutic medical uses that meet one of the following criteria:

(a) Is approved in the sealed source and device registry.

Note: The sealed source and device registrations may be obtained from the manufacturer or by writing the department at: Department of Health and Family Services, Radiation Protection Section, P.O. Box 2659, Madison WI 53701−2659.

(b) In research under an effective investigational device exemption application accepted by the FDA, provided the requirements of s. DHS 157.61 (6) (a) are met.

Note: The FDA requirements for investigational devices may be found at: http://www.fda.gov/cber/ind/indpubs.htm

(2) SURVEYS OF PATIENTS AND HUMAN RESEARCH SUBJECTS TREATED WITH A REMOTE AFTERLOADER UNIT. (a) Before releasing a patient or a human research subject from licensee control, a licensee shall make a survey of the patient or the human research subject and the remote afterloader unit with a portable radiation detection survey instrument to confirm that the source has been removed from the patient or human research subject and returned to the safe shielded position.

(b) A licensee shall retain a record of the surveys under s. DHS 157.71 (16).

Unofficial Text (See Printed Volume). Current through date and Register shown on Title Page.

(3) INSTALLATION, MAINTENANCE, ADJUSTMENT AND REPAIR. (a) A person shall be specifically licensed by the department, NRC or another agreement state to install, maintain, adjust or repair a remote afterloader unit, teletherapy unit or gamma stereotactic radiosurgery unit that involves work on the source shielding, the source driving unit used to move the source or other electronic or mechanical component that could expose the source, reduce the shielding around the source or compromise the radiation safety of the unit or the source.

(b) Except for low dose−rate remote afterloader units, only a person specifically licensed by the department, NRC or another agreement state may install, replace, relocate or remove a sealed source or source contained in other remote afterloader units, teletherapy units or gamma stereotactic units.

(c) For a low dose−rate remote afterloader unit, only a person specifically licensed by the department, NRC or another agreement state, or an authorized medical physicist, shall install, replace, relocate or remove a sealed source contained in the unit.

(d) A licensee shall retain a record of the installation, maintenance, adjustment and repair done on remote afterloader units, teletherapy units and gamma stereotactic radiosurgery units under s. DHS 157.71 (19).

(4) SAFETY PROCEDURES AND INSTRUCTIONS FOR REMOTE AFTERLOADER, TELETHERAPY AND GAMMA STEREOTACTIC RADIOSURGERY UNITS. (a) A licensee shall do all of the following:

1. Secure the unit, console, console keys and the treatment room when unattended or not in use.
2. Permit only individuals approved by the authorized user, radiation safety officer or authorized medical physicist to be present in the treatment room during treatment with the source.
3. Prevent dual operation of more than one radiation producing device in a treatment room, if applicable.
4. Develop, implement and maintain written procedures for responding to an abnormal situation when the operator is unable to place the source in the shielded position or remove the patient or human research subject from the radiation field with controls from outside the treatment room. The procedure shall include all the following:

a. Instructions for responding to equipment failures and the names of the persons responsible for implementing corrective actions.

b. The process for restricting access to and posting signs in the proximity of the treatment area to minimize the risk of inadvertent exposure.

c. The names and telephone numbers of the authorized users, the authorized medical physicist and the radiation safety officer to be contacted if the unit or console operates abnormally.

(b) A copy of the procedures required by par. (a) 4. shall be physically located at the unit console.

(c) A licensee shall post instructions at the unit console to inform the operator of both of the following:

1. The location of the procedures required by par. (a) 4.
2. The names and telephone numbers of the authorized users, the authorized medical physicist and the radiation safety officer to be contacted if the unit or console operates abnormally.

(d) A licensee shall provide instruction, initially and at least annually, to all persons who operate the unit, as appropriate to the person's assigned duties, in all the following:

1. The procedures identified in par. (a) 4.
2. The operating procedures for the unit.

(e) A licensee shall ensure that operators, authorized medical physicists and authorized users participate in drills of the emergency procedures, initially and at least annually thereafter.

(f) A licensee shall retain a record of individuals receiving instruction required under s. DHS 157.71 (15).

(5) SAFETY PRECAUTIONS FOR REMOTE AFTERLOADER, TELETHERAPY AND GAMMA STEREOTACTIC RADIOSURGERY UNITS. (a) A licensee shall control access to the treatment room by a door at each entrance.

(b) A licensee shall equip each entrance to the treatment room with an electrical interlock system that accomplishes all the following:

1. Prevents the operator from initiating the treatment cycle unless each treatment room entrance door is closed.
2. Causes the source to be shielded promptly when an entrance door is opened.
3. Prevents the source from being exposed following an interlock interruption until all treatment room entrance doors are closed and the source on−off control is reset at the console.

(c) A licensee shall require any person entering the treatment room to assure, via appropriate radiation monitors, that radiation levels have returned to ambient levels.

Unofficial Text (See Printed Volume). Current through date and Register shown on Title Page.

(d) Except for low−dose remote afterloader units, a licensee shall construct or equip each treatment room with viewing and intercom systems to permit continuous observation of the patient or the human research subject from the treatment console during irradiation.
(e) For licensed activities where sources are placed within the patient's or human research subject's body, a licensee shall only conduct treatments that allow for expeditious removal of a decoupled or jammed source.
(f) A licensee shall do all the following:
1. For medium dose−rate and pulsed dose−rate remote afterloader units, require all the following:
a. An authorized medical physicist and either an authorized user or a physician, under the supervision of an authorized user, who has been trained in the operation and emergency response for
the unit to be physically present during the initiation of all patient treatments involving the unit.
b. An authorized medical physicist and either an authorized user or a person under the supervision of an authorized user who has been trained to remove the source applicator in the event of an emergency involving the unit to be immediately available during continuation of all patient treatments involving the unit.
2. For high dose−rate remote afterloader units, require all the following:
a. An authorized user and an authorized medical physicist to be physically present during the initiation of all patient treatments involving the unit.
b. An authorized medical physicist and either an authorized user or a physician, under the supervision of an authorized user, who has been trained in the operation and emergency response for the unit to be physically present during continuation of all patient treatments involving the unit.
3. For gamma stereotactic radiosurgery units, require an authorized user and an authorized medical physicist to be physically present throughout all patient treatments involving the unit.
4. Notify the radiation safety officer or his or her designee and an authorized user immediately if the patient or human research subject has a medical emergency or if the patient dies.
(g) A licensee shall have available near each treatment room, emergency response equipment, as applicable, to respond to all of the following:
1. A source inadvertently remaining in the unshielded position.
2. A source inadvertently lodged within the patient following completion of the treatment.
(6) DOSIMETRY EQUIPMENT. (a) Except for low dose−rate remote afterloader sources where the source output or activity is determined by the manufacturer, a licensee shall have a calibrated dosimetry system available for use. To satisfy this requirement, one of the following conditions shall be met:
1. The system shall have been calibrated using a system or source traceable to the national institute of standards and technology and published protocols accepted by nationally recognized bodies, or by a calibration laboratory accredited by the American association of physicists in medicine. The calibration shall have been performed within the previous 2 years and after any servicing that may have affected system calibration.
Note: An example of a nationally recognized body is the American Association of Physicists in Medicine.
2. The system shall have been calibrated within the previous 4 years. Eighteen to 30 months after that calibration, the system shall have been compared to another dosimetry system that was calibrated within the past 24 months by the national institute of standards and technology or by a calibration laboratory accredited by the American association of physicists in medicine. The results of the comparison shall have indicated that the calibration factor of the licensee's system had not changed by more than 2%. A licensee may not use the intercomparison result to change the calibration factor. When comparing dosimetry systems to be used for calibrating sealed sources for therapeutic units, a licensee shall use a comparable unit with beam attenuators or collimators, as applicable, and sources of the same radionuclide as the source used at the licensee's facility.
(b) A licensee shall have available for use a dosimetry system for spot−check output measurements to periodically measure the radiation output of the device for consistency, if applicable. To satisfy this requirement, the system may be compared with a system that has been calibrated under par. (a). The comparison shall have been performed within the previous 12 months and after each servicing that may have affected system calibration. The spot−check system may be the same system used to meet the requirement in par. (a).
(c) A licensee shall retain a record of each calibration and comparison under s. DHS 157.71 (20).
(7) FULL CALIBRATION MEASUREMENTS ON TELETHERAPY UNITS.

Unofficial Text (See Printed Volume). Current through date and Register shown on Title Page.

(a) A licensee authorized to use a teletherapy unit for medical use shall perform full calibration measurements on each teletherapy unit under any of the following circumstances:
1. Before the first medical use of the unit.
2. Before medical use under all of the following conditions:
a. Whenever spot−check measurements indicate that the output differs by more than 5% from the output obtained at the last full calibration corrected mathematically for radioactive decay.
b. Following replacement of the source or following reinstallation of the teletherapy unit in a new location.
c. Following any repair of the teletherapy unit that includes removal of the source or major repair of the components associated with the source exposure assembly.
3. At intervals not exceeding one year.
(b) To satisfy the requirements of par. (a), full calibration measurements shall include determination of all of the following:
1. The output within plus or minus 3% for the range of field sizes and for the distance or range of distances used for medical use.
2. The coincidence of the radiation field and the field indicated by the light beam localizing device.
3. The uniformity of the radiation field and its dependence on the orientation of the useful beam.
4. Timer accuracy and linearity over the range of use.
5. On−off error.
6. The accuracy of all distance measuring and localization devices in medical use.
(c) A licensee shall use the dosimetry system described in sub. (6) (a) to measure the output for one set of exposure conditions. The remaining radiation measurements required in par. (b) may be made using a dosimetry system that indicates relative dose rates.
(d) A licensee shall perform a full calibration required by par. (a) under published protocols accepted by nationally recognized bodies.
Note: An example of such a nationally recognized body is the American Association of Physicists in Medicine.
(e) A licensee shall mathematically correct the outputs determined in par. (b) 1. for physical decay for intervals not exceeding one month for cobalt−60, 6 months for cesium−137 or at intervals consistent with one percent decay for all other nuclides.
(f) Full calibration measurements required by par. (a) and physical decay corrections required by par. (e) shall be performed by an authorized medical physicist.
(g) A licensee shall retain a record of each calibration under s. DHS 157.71 (21).
(8) FULL CALIBRATION MEASUREMENTS ON REMOTE AFTERLOADER UNITS. (a) A licensee authorized to use a remote afterloader unit for medical use shall perform a full calibration measurement on each unit under any of the following circumstances:
1. Before the first medical use of the unit.
2. Before medical use under all the following conditions:
a. Following replacement of any source or following reinstallation of the unit in a new location outside the facility.
b. Following any repair of the unit that includes removal of the source or major repair of the components associated with the source exposure assembly.
3. Each calendar quarter, at intervals not exceeding 100 days for high dose−rate, medium dose−rate and pulsed dose−rate remote afterloader units with sources whose half−life exceeds 75 days.
4. At intervals not exceeding one year for low dose−rate remote afterloader units.
(b) To satisfy the requirement of par. (a), a full calibration measurement shall include, as applicable, determination of all the following:
1. The output within 5% ~~of the source strength~~ .
2. Source positioning accuracy to within plus or minus one millimeter.
3. Source retraction with backup battery upon power failure.
4. Length of the source transfer tubes.
5. Timer accuracy and linearity over the typical range of use.
6. Length of the applicators.
7. Function of the source transfer tubes, applicators and transfer tube−applicator interfaces.
(c) In addition to the requirement for full calibration for low dose−rate remote afterloader units in par. (b), a licensee shall perform an autoradiograph of the source to verify inventory and source arrangement at intervals not exceeding one calendar quarter.

Unofficial Text (See Printed Volume). Current through date and Register shown on Title Page.

(d) A licensee shall use the dosimetry system described in sub. (6) (a) to measure the output.
(e) A licensee shall make a full calibration measurement required by par. (a) under published protocols accepted by nationally recognized bodies.
(f) For low dose−rate remote afterloader units, a licensee may use measurements provided by the source manufacturer that are made under pars. (a) to (e).
(g) A licensee shall mathematically correct the outputs determined in par. (b) 1. for physical decay at intervals consistent with one percent physical decay.
(h) A full calibration measurement required by par. (a) and physical decay correction required by par. (g) shall be performed by the authorized medical physicist.
(i) A licensee shall retain a record of each calibration under s.DHS 157.71 (21).
(j) In addition to the requirements for full calibration for low dose rate remote afterloaders, as specified in par. (b), a licensee shall perform an autoradiograph of the source or sources to verify inventory and source arrangement at intervals not to exceed 3 months.
(9) FULL CALIBRATION MEASUREMENTS ON GAMMA STEREOTACTIC RADIOSURGERY UNITS. (a) A licensee authorized to use a gamma stereotactic radiosurgery unit for medical use shall perform full calibration measurements on each unit under any of the following circumstances:
1. Before the first medical use of the unit.
2. Before medical use under all of the following conditions:
a. Whenever spot−check measurements indicate that the output differs by more than 5% from the output obtained at the last full calibration corrected mathematically for radioactive decay.
b. Following replacement of the sources or following reinstallation of the gamma stereotactic radiosurgery unit in a new location.
c. Following any repair of the gamma stereotactic radiosurgery unit that includes removal of the sources or major repair of the components associated with the source assembly.
3. At intervals not exceeding one year, with the exception that relative helmet factors need only be determined before the first medical use of a helmet and following any damage to the helmet.
(b) To satisfy the requirement of par. (a), a full calibration measurement shall include determination of all the following:
1. The output within plus or minus 3%.
2. Relative helmet factors to verify that the helmet material provides the required shielding to the patient.
3. Isocenter coincidence to confirm the centering accuracy of the radiation beam relative to the helmet openings.
4. Timer accuracy and linearity over the range of use.
5. On−off error.
6. Trunnion centricity to determine the rotational center of the source relative to the helmet openings.
7. Treatment table retraction mechanism, using backup battery power or hydraulic backups with the main power to the unit off.
8. Helmet microswitches to determine if the switches terminate the radiation beam when tripped by unintended movement of the helmet.
9. Emergency timing circuits.
10. Stereotactic frames and localizing devices (trunnions).
(c) A licensee shall use the dosimetry system described in sub.(6) (a) to measure the output for one set of exposure conditions. The remaining radiation measurements required in par. (b) 1. may be made using a dosimetry system that indicates relative dose rates.
(d) A licensee shall make a full calibration measurement required by par. (a) under published protocols accepted by nationally recognized bodies.
Note: An example of such a nationally recognized body is the American Association of Physicists in Medicine.
(e) A licensee shall mathematically correct the outputs determined in par. (b) 1. at intervals not exceeding one month for cobalt−60 and at intervals consistent with one percent physical decay for all other radionuclides.
(f) A full calibration measurement required by par. (a) and physical decay correction required by par. (e) shall be performed by an authorized medical physicist.
(g) A licensee shall retain a record of each calibration under s. DHS 157.71 (21).

Unofficial Text (See Printed Volume). Current through date and Register shown on Title Page.

(10) PERIODIC SPOT−CHECKS FOR TELETHERAPY UNITS. (a) A licensee authorized to use teletherapy units for medical use shall perform output spot−checks on each teletherapy unit once in each calendar month that include determination of all of the following:
1. Timer constancy and timer linearity over the range of use.
2. On−off error.
3. The coincidence of the radiation field and the field indicated by the light beam localizing device.
4. The accuracy of all distance measuring and localization devices used for medical use.
5. The output for one typical set of operating conditions measured with the dosimetry system described in sub. (6) (b).
6. The difference between the measurement made in this subd. 5. and the anticipated output expressed as a percentage of the anticipated output, which is the value obtained at last full calibration corrected mathematically for physical decay.
(b) A licensee shall perform measurements required by par. (a) under procedures established by the authorized medical physicist. The authorized medical physicist need not actually perform the spot check measurements.
(c) A licensee shall have the authorized medical physicist review the results of each spot−check within 15 working days. The authorized medical physicist shall notify the licensee in writing of the results of each spot−check within 10 working days.
(d) A licensee authorized to use a teletherapy unit for medical use shall perform safety spot−checks of each teletherapy facility once in each calendar month and after each source installation to assure proper operation of all of the following:
1. Electrical interlocks at each teletherapy room entrance.
2. Electrical or mechanical stops installed to limit use of the primary beam of radiation.
Note: Examples of the limitations in subd. 2. include restriction of source housing angulation or elevation, carriage or stand travel and operation of the beam on−off mechanism.
3. Source exposure indicator lights on the teletherapy unit, on the control console and in the facility.
4. Viewing and intercom systems.
5. Treatment room doors from inside and outside the treatment room.
6. Electrically assisted treatment room doors with the teletherapy unit electrical power turned off.
(e) If the results of the checks required in par. (d) indicate the malfunction of any system, a licensee shall lock the control console in the off position and not use the unit except as may be necessary to repair, replace or check the malfunctioning system.
(f) A licensee shall retain a record of each spot−check required by pars. (a) and (d), under s. DHS 157.71 (22).
(11) PERIODIC SPOT−CHECKS FOR REMOTE AFTERLOADER UNITS. (a) A licensee authorized to use remote afterloader units for medical use shall perform a spot−check of each remote afterloader facility and on each unit according to the following criteria:
1. At the beginning of each day of use of a high dose−rate, medium dose−rate or pulsed dose−rate remote afterloader unit.
2. Prior to each patient treatment with a low dose−rate remote afterloader unit.
3. After each source installation.
(b) A licensee shall have an authorized medical physicist establish written procedures for performing the spot−checks required in par. (a) of this section. The authorized medical physicist need not actually perform the spot check measurements.
(c) To satisfy the requirements of par. (a), a spot−check shall assure proper operation of all of the following:
1. Electrical interlocks at each remote afterloader unit room entrance.
2. Source exposure indicator lights on the remote afterloader unit, on the control console and in the facility.
3. Viewing and intercom systems in each high dose−rate, medium dose−rate and pulsed dose−rate remote afterloader facility.
4. Emergency response equipment.
5. Radiation monitors used to indicate the source position.
6. Timer accuracy.
7. The date and time of the clock in the unit's computer.
8. Decayed source activity in the unit's computer.

Unofficial Text (See Printed Volume). Current through date and Register shown on Title Page.

(d) If the results of the checks required in par. (c) indicate the malfunction of any system, a licensee shall lock the control console in the off position and not use the unit except as necessary to repair, replace or check the malfunctioning system.
(e) A licensee shall retain a record of each check required by par. (c) under s. DHS 157.71 (23).
(f) A licensee shall have an authorized medical physicist review the results of each spot−check within 15 working days of the spot check. The authorized medical physicist shall notify the licensee in writing of the results of each spot−check within 10 working days.
(12) PERIODIC SPOT−CHECKS FOR GAMMA STEREOTACTIC RADIOSURGERY UNITS.
(a) A licensee authorized to use a gamma stereotactic radiosurgery unit for medical use shall perform spot−checks of each gamma stereotactic radiosurgery facility and on each unit at all of the following times:
1. Monthly.
2. At the beginning of each day of use.
3. After each source installation.
(b) A licensee shall have an authorized medical physicist do all the following:
1. Establish written procedures for performing the spot−checks required in par. (a).
2. Review the results of each spot−check required by par. (a) 1. within 15 working days of the check. The authorized medical physicist need not actually perform the spot−check measurements.
3. The authorized physicist shall notify the licensee in writing of the results of the spot check review within 10 working days.
(c) To satisfy the requirements of par. (a) 1., a spot−check shall do all of the following:
1. Assure proper operation of treatment table retraction mechanism, using backup battery power or hydraulic backups with the unit off; helmet microswitches; emergency timing circuits and stereotactic frames and localizing devices.
2. Determine all of the following:
a. The output for one typical set of operating conditions measured with the dosimetry system described in sub. (6) (b).
b. The difference between the measurement made in subd. 2. a. and the anticipated output expressed as a percentage of the anticipated output.
c. Source output against computer calculation.
d. Timer accuracy and linearity over the range of use.
e. On−off error.
f. Trunnion centricity.
(d) To satisfy the requirements of par. (a) 2. and 3., a spot−check shall assure proper operation of all of the following:
1. Electrical interlocks at each gamma stereotactic radiosurgery room entrance.
2. Source exposure indicator lights on the gamma stereotactic radiosurgery unit, on the control console and in the facility.
3. Viewing and intercom systems.
4. Timer termination of the radiation beam.
5. Radiation monitors used to indicate room exposures.
6. Emergency off buttons.
(e) A licensee shall arrange for prompt repair of any system identified in par. (c) or (d) that is not operating properly.
(f) If the results of the checks required in par. (d) indicate the malfunction of any system, a licensee shall lock the control console in the off position and not use the unit except as may be necessary to repair, replace or check the malfunctioning system.
(g) A licensee shall retain a record of each check required by pars. (c) and (d) under s. DHS 157.71 (24).
(13) ADDITIONAL TECHNICAL REQUIREMENTS FOR MOBILE REMOTE AFTERLOADER UNITS. (a) A licensee providing mobile remote afterloader service shall do all of the following:
1. Check survey instruments before medical use at each client's address of use or on each day of use, whichever is more frequent.
2. Account for all sources before departure from a client's address of use.
(b) In addition to the periodic spot−checks required by sub. (11), a licensee authorized to use mobile afterloaders for medical use shall perform checks on each remote afterloader unit before use at each address. A check shall be made to verify the operation of all the following:

Unofficial Text (See Printed Volume). Current through date and Register shown on Title Page.

1. Electrical interlocks on treatment area access points.
2. Source exposure indicator lights on the remote afterloader unit, on the control console and in the facility.
3. Viewing and intercom systems.
4. Applicators, source transfer tubes and transfer tube−applicator interfaces.
5. Radiation monitors used to indicate room exposures.
6. Accuracy of source positioning.
7. Radiation monitors used to indicate whether the source has returned to a safe shielded position.

(c) A licensee shall ensure overall proper operation of the remote afterloader unit by conducting a simulated cycle of treatment before use at each address of use.

(d) If the results of the checks required in par. (b) indicate the malfunction of any system, a licensee shall lock the control console in the off position and not use the unit except as may be necessary to repair, replace or check the malfunctioning system.

(e) A licensee shall retain a record of each check required by par. (b) under s. DHS 157.71 (25).

(14) RADIATION SURVEYS. (a) In addition to the survey requirement in s. DHS 157.25 (1), a person licensed to possess or use photon emitting remote afterloader, teletherapy or gamma stereotactic radiosurgery units shall perform surveys of the device and ensure the results of the surveys from the surface of the main source safe, with the sources in the shielded position, do not exceed the maximum and average radiation levels listed in the sealed source and device registry.

(b) A licensee shall make the survey required by par. (a) at installation of a new source and following repairs to source shielding, a source driving unit or other electronic or mechanical component that could expose a source, reduce the shielding around a source or compromise the radiation safety of the unit or a source.

(c) A licensee shall retain a record of the radiation surveys required by par. (a) under s. DHS 157.71 (26).

(15) FIVE−YEAR INSPECTION FOR TELETHERAPY AND GAMMA STEREOTACTIC RADIOTHERAPY UNITS. (a) A licensee shall have each teletherapy unit and gamma stereotactic radiosurgery unit inspected for proper operation and serviced during source replacement or at intervals not to exceed 5 years, whichever comes first, to assure proper functioning of the source exposure mechanism.

(b) Inspection and servicing of a teletherapy or gamma stereotactic radiosurgery unit may only be performed by a person specifically licensed to do so by the department, the NRC or another agreement state.

(c) A licensee shall keep a record of the inspection and servicing under s. DHS 157.71 (27).

(16) THERAPY−RELATED COMPUTER SYSTEMS. A licensee shall perform acceptance testing on the treatment planning system under published protocols accepted by nationally recognized bodies. The acceptance testing shall include, as applicable, verification of all of the following:

(a) Source−specific input parameters required by the dose calculation algorithm used to calculate the dose to the patient.

(b) Accuracy of dose, dwell time of the radioactive source at a particular location and treatment time calculations at representative points.

(c) Accuracy of isodose graphic plots on paper and graphic displays.

(d) Accuracy of the software used to determine radioactive source positions from radiographic images.

(e) Accuracy of electronic transfer of the treatment delivery parameters to the treatment delivery unit from the treatment planning system that was used to calculate the patient dose and radioactive source dwell times.

Note: An example of such a nationally recognized body is the American Association of Physicists in Medicine.

(17) TRAINING FOR USE OF REMOTE AFTERLOADER, TELETHERAPY AND GAMMA STEREOTACTIC RADIOSURGERY UNITS. A licensee shall require an authorized user of a sealed source for a use authorized under sub. (1) to have received training in device operation, safety procedures, and clinical use for the type of use for which authorization is sought. This training requirement may be satisfied by satisfactory completion of a training program provided by the vendor for new users or by receiving training supervised by an authorized user or authorized medical physicist, as appropriate, who is authorized for the type of use for which the individual is seeking authorization. Except as provided in s. DHS 157.61 (10), a licensee shall require an authorized user of sealed source for a use authorized under sub. (1) to have obtained written attestation under sub. (18) and to be a physician who meets either of the following requirements:

Unofficial Text (See Printed Volume). Current through date and Register shown on Title Page.

(a) Is certified by a medical specialty board whose certification process has been recognized by the department, the NRC or an agreement state. To be recognized, a specialty board shall require all candidates for certification to do all of the following:
1. Successfully complete a minimum of 3 years of residency training in a radiation therapy program approved by the residency review committee of the accreditation council for graduate medical education or the royal college of physicians and surgeons of Canada or the committee on post−graduate training of the American osteopathic association.
2. Pass an examination, administered by diplomates of the specialty board, which tests knowledge and competence in radiation safety, radionuclide handling, treatment planning, quality assurance, and clinical use of stereotactic radiosurgery, remote afterloaders and external beam therapy.
Note: Specialty boards whose certification processes have been recognized by the Department, the NRC or an agreement state will be posted on the NRC's web site at www.nrc.gov.
(b) Has completed a structured educational program in basic radionuclide techniques applicable to the use of a sealed source in a therapeutic medical unit that includes all of the following:
1. Two hundred hours of classroom and laboratory training in all the following areas:
a. Radiation physics and instrumentation.
b. Radiation protection.
c. Mathematics pertaining to the use and measurement of radioactivity.
d. Radiation biology.
2. Five hundred hours of work experience, under the supervision of an authorized user who meets the requirements in this subsection, or equivalent agreement state requirements at a medical institution, involving all of the following:
a. Reviewing full calibration measurements and periodic spot checks.
b. Preparing treatment plans and calculating treatment doses and times.
c. Using administrative controls to prevent a medical event involving the use of radioactive material.
d. Implementing emergency procedures to be followed in the event of the abnormal operation of the medical unit or console.
e. Checking and using survey meters.
f. Selecting the proper dose and how it is to be administered.
3. Three years of supervised clinical experience in radiation therapy under an authorized user who meets the requirements in this subsection, or equivalent agreement state requirements, as part of a formal training program approved by the residency review committee for radiation oncology of the accreditation council for graduate medical education or royal college of physicians and surgeons of Canada or the committee on postdoctoral training of the American osteopathic association. This experience may be obtained concurrently with the supervised work experience required by subd. 2.
(18) WRITTEN ATTESTATION. A licensee shall require an authorized user of a sealed source for a use authorized under sub. (17) to have obtained written attestation that the individual has satisfactorily completed the requirements in sub. (17) (a) 1. or (b), and has achieved a level of competency sufficient to function independently as an authorized user of each type of therapeutic medical unit for which the individual is requesting authorized user status. The written attestation shall be signed by a preceptor authorized user who meets the requirements in sub. (17), or equivalent agreement state requirements for an authorized user for each type of therapeutic medical unit for which the individual is requesting authorized user status.
History: CR 01−108: cr. Register July 2002 No. 559, eff. − see Note at the start of the chapter; correction in (4) (f) made under s. 13.93 (2m) (b) 7., Stats., Register July 2002 No. 559; **CR 06−021: am. (9) (b) 2., 3., 6., 8. and 10., r. and recr. (17), cr. (18) Register September 2006, No. 609, eff. 10−1−06**.

DHS 157.68 Radioactive drugs for medical use. (1) PREPARATION. A licensee authorized to manufacture, prepare or transfer for commercial distribution or noncommercial transfer to medical use licensees in a consortium radioactive drugs shall ensure that any individual preparing the drugs is one of the following:
(a) An authorized nuclear pharmacist.
(b) An individual under the supervision of an authorized nuclear pharmacist.
(c) A pharmacist that meets any of the following criteria:
1. The requirements for an authorized nuclear pharmacist as specified in s. DHS 157.61 (9) and (11).
2. Is identified as an authorized nuclear pharmacist on a license issued by the department, an agreement state or the NRC.

Unofficial Text (See Printed Volume). Current through date and Register shown on Title Page.

3. Is identified as an authorized nuclear pharmacist by a licensee who is authorized by the department, an agreement state or the NRC to designate authorized nuclear pharmacists operating under their license.
(2) DOCUMENTATION. A licensee shall provide to the department a copy of all the following, as appropriate:
(a) Each individual's certification by the board of pharmaceutical specialties.
(b) The department, NRC or agreement state license.
(c) The permit issued by a licensee of broad scope.
(d) A list of authorized nuclear pharmacists designated by a licensee under sub. (1) (c) 3.
(e) The state pharmacist licensure, no later than 30 days after the date that the licensee allows, under sub. (1)(c)1. and 2., the individual to work as an authorized nuclear pharmacist.
History: CR 06−021: cr. Register October 2006 No. 610, eff. 11−1−06.

DHS 157.70 Other medical uses of radioactive material or radiation from radioactive material. A licensee may use radioactive material or a radiation source approved for medical use that is not specifically addressed in ss. DHS 157.63 to 157.67 if all of the following criteria are met:
(1) APPLICATION. The applicant or licensee has submitted the information required by s. DHS 157.59 (2) (b) and (c).
(2) APPROVAL. The applicant or licensee has received written approval from the department in a license and uses the material under this chapter and specific conditions the department considers necessary for the medical use of the material.
History: CR 01−108: cr. Register July 2002 No. 559, eff. − see Note at the start of the chapter.

DHS 157.71 Records. (1) RECORDS OF AUTHORITY AND RESPONSIBILITIES FOR RADIATION PROTECTION PROGRAMS. (a) A licensee shall retain a record of actions taken by the licensee's management under s. DHS 157.61 (1) (a) for 5 years. The record shall include a summary of the actions taken and a signature of licensee management.
(b) A licensee shall retain a current copy of the authorities, duties and responsibilities of the radiation safety officer as required by s. DHS 157.61 (1) (d). The record shall include the signature of the radiation safety officer and licensee management.
(2) RECORDS OF RADIATION PROTECTION PROGRAM SAFETY CHANGES. A licensee shall retain a record of each radiation protection program change made under s. DHS 157.61 (2) (a) for 5 years. The record shall include a copy of the old and new procedures, the effective date of the change and the signature of the licensee management that reviewed and approved the change.
(3) RECORDS OF WRITTEN DIRECTIVES. A licensee shall retain a copy of each written directive as required by s. DHS 157.61 (4) for 3 years.
(4) RECORDS OF MEDICAL EVENTS. (a) A licensee shall retain a record of medical events reported under s. DHS 157.72 (1) for 3 years.
(b) The record shall contain all of the following:
1. The licensee's name.
2. Names of the persons involved.
3. The social security number or other identification number, if one has been assigned, of any person who is the subject of a medical event.
4. A brief description of the event and why it occurred.
5. The effect, if any, on any individual.
6. The actions, if any, taken or planned to prevent recurrence.
7. Whether the licensee notified the affected individual or the affected individual's responsible relative or guardian and, if not, whether the failure to notify was based on guidance from the referring physician.
(5) RECORD OF A DOSE TO AN EMBRYO OR FETUS OR A NURSING CHILD. A licensee shall retain a record of a dose to an embryo or fetus or a nursing child reported under s. DHS 157.72 (2) for 3 years. The record shall contain all of the following:
(a) The licensee's name.
(b) The names of all the individuals involved.
(c) The social security number or other identification number, if one has been assigned of the pregnant individual or nursing child who is the subject of the event.
(d) A brief description of the event, why it occurred, any effect on the embryo or fetus or nursing child and any actions taken or planned to prevent recurrence.

Unofficial Text (See Printed Volume). Current through date and Register shown on Title Page.

(e) Whether the licensee notified the pregnant individual or mother, or the mother's or child's responsible relative or guardian, and if the licensee did not, whether such failure to notify was based on guidance from the referring physician.

(6) RECORDS OF INSTRUMENT CALIBRATIONS. A licensee shall maintain a record of instrument calibrations required by s. DHS 157.62 (1) for 3 years. The record shall include the model and serial number of the instrument, the date of the calibration, the results of the calibration and the name of the individual who performed the calibration.

(7) RECORDS OF RADIATION SURVEY INSTRUMENT CALIBRATIONS. A licensee shall maintain a record of radiation survey instrument calibrations required by s. DHS 157.62 (2) for 3 years. The record shall include the date of the calibration, the results of the calibration, the name of the person who performed the calibration, and the model and serial number of the instrument.

(8) RECORDS OF DOSAGES OF UNSEALED RADIOACTIVE MATERIAL FOR MEDICAL USE. A licensee shall maintain a record of dosage determinations required by s. DHS 157.62 (3) for 3 years. The record shall contain the radiopharmaceutical, patient's or human research subject's name or identification number if one has been assigned, the prescribed dosage, the determined dosage or a notation that the total activity is less than 1.1 MBq (30 μCi), the date and time of the dosage determination and the name of the individual who determined the dosage.

(9) RECORDS OF POSSESSION OF SEALED SOURCES AND BRACHYTHERAPY SOURCES.

(a) A licensee shall retain a record of leak tests required by s. DHS 157.62 (5) (b) for 3 years. The record shall contain the model number and serial number if one has been assigned of each source tested, the identity of each source radionuclide and its estimated activity, the results of the test, the date of the test and the name of the person who performed the test.

(b) A licensee shall retain a record of the semi−annual physical inventory of sealed sources and brachytherapy sources required by s. DHS 157.62 (5) (g) for 3 years. The inventory record shall contain the model number of each source and serial number if one has been assigned, the identity of each source radionuclide and its nominal activity, the location of each source and the name of the person who performed the inventory.

(10) RECORDS OF SURVEYS FOR AMBIENT RADIATION EXPOSURE RATE. A licensee shall retain a record of each survey required by s. DHS 157.62 (7) for 3 years. The record shall include the date of the survey, the results of the survey, the instrument used to make the survey and the name of the person who performed the survey.

(11) RECORDS OF THE RELEASE OF PERSONS CONTAINING RADIOACTIVE DRUGS OR IMPLANTS CONTAINING RADIOACTIVE MATERIAL. (a) A licensee shall retain a record of the basis for authorizing the release of a person for 3 years after the date of release if the total effective dose equivalent is calculated by any of the following methods:

1. Using the retained radioactivity in the body rather than the radioactivity administered.
2. Using an occupancy factor less than 0.25 at one meter to determine radiation exposure to persons physically near the patient.
3. Using the biological or effective half−life of the radioactive material retained in the body.
4. Considering the shielding by tissue to calculate the exposure to persons physically near the patient.

(b) A licensee shall retain a record for 3 years after the date of release that the instructions required by s. DHS 157.62 (8) (b) were provided to a breast−feeding woman if the radiation dose to the infant or child from continued breast−feeding could result in a total effective dose equivalent exceeding 5 mSv (0.5 rem).

(12) RECORDS OF ADMINISTRATIVE AND TECHNICAL REQUIREMENTS THAT APPLY TO THE PROVISION OF MOBILE SERVICES. (a) A licensee shall retain a copy of the letter that permits the use of radioactive material at a client's address of use, as required by s. DHS 157.62 (9) (a) 1., for 3 years after the last provision of service.

(b) A licensee shall retain the record of each survey required by s. DHS 157.62 (9) (a) 4. for 3 years. The record shall include the date of the survey, the results of the survey, the instrument used to make the survey and the name of the person who performed the survey.

(13) RECORDS OF DECAY−IN−STORAGE. A licensee shall maintain a record of the disposal of licensed materials as required by s. DHS 157.62 (10) for 3 years. The record shall include the date of the disposal, the survey instrument used, the background dose rate, the dose rate measured at the surface of each waste container and the name of the person who performed the disposal.

Unofficial Text (See Printed Volume). Current through date and Register shown on Title Page.

(14) RECORDS OF CONTAMINANT CONCENTRATION. A licensee shall maintain a record of the contaminant concentration tests required by s. DHS 157.63 (3) (b) for 3 years. The record shall include, for each measured elution or extract, all of the following:
(a) The ratio of the measures expressed as kilobecquerel (microcurie) of molybdenum−99, strontium −82 or strontium−85 per megabecquerel of technetium−99m or rubidium−82 chloride injection.
(b) The time and date of the measurement.
(c) The name of the person who made the measurement.
(15) RECORDS OF INSTRUCTION AND TRAINING. A licensee shall maintain a record of instructions and training required by ss. DHS 157.64 (2), 157.65 (4) and 157.67 (4) for 3 years. The record shall include a list of the topics covered, the date of the instruction or training, the names of the attendees and the names of the persons who provided the instruction.
(16) RECORDS OF RADIATION SURVEYS OF PATIENTS AND HUMAN RESEARCH SUBJECTS. A licensee shall maintain a record of the surveys required by ss. DHS 157.65 (2) and 157.67 (2) for 3 years. Each record shall include the date and results of the survey, the survey instrument used and the name of the person who made the survey.
(17) RECORDS OF BRACHYTHERAPY SOURCE INVENTORY. (a) A licensee shall maintain a record of brachytherapy source accountability required by s. DHS 157.65 (3) for 3 years.
(b) For temporary implants, the record shall include all of the following:
1. The number and activity of sources removed from storage, the time and date they were removed from storage, the name of the person who removed them from storage and the location of use.
2. The number and activity of sources returned to storage, the time and date they were returned to storage and the name of the person who returned them from storage.
(c) For permanent implants, the record shall include all of the following:
1. The number and activity of sources removed from storage, the date they were removed from storage and the name of the person who removed them from storage.
2. The number and activity of sources returned to storage, the date they were returned to storage and the name of the person who returned them to storage.
3. The number and activity of sources permanently implanted in the patient or human research subject.
(18) RECORDS OF CALIBRATIONS ON BRACHYTHERAPY SOURCES. A licensee shall maintain a record of the calibrations on brachytherapy sources required by s. DHS 157.65 (6) for 3 years after the last use of the source. The record shall include the date of the calibration, the manufacturer's name, model number and serial number for the source and instruments used to calibrate the source, the source output or activity, source positioning accuracy within applicators and the signature of the authorized medical physicist.
(19) RECORDS OF INSTALLATION, MAINTENANCE, ADJUSTMENT AND REPAIR. A licensee shall retain a record of the installation, maintenance, adjustment and repair of remote afterloader units, teletherapy units and gamma stereotactic units as required by s. DHS 157.67 (3) for 3 years. For each installation, maintenance, adjustment and repair, the record shall include the date, description of the service and names of the persons who performed the work.
(20) RECORDS OF DOSIMETRY EQUIPMENT. (a) A licensee shall retain a record of the calibration, intercomparison and comparisons of its dosimetry equipment done under s. DHS 157.67 (6) for the duration of the license.
(b) For each calibration, intercomparison or comparison, the record shall include all of the following:
1. The date.
2. The model numbers and serial numbers of the instruments that were calibrated, intercompared or compared.
3. The correction factor that was determined from the calibration or comparison or the apparent correction factor that was determined from an intercomparison.
4. The names of the persons who performed the calibration, intercomparison or comparison.
(21) RECORDS OF TELETHERAPY, REMOTE AFTERLOADER AND GAMMA STEREOTACTIC RADIOSURGERY FULL CALIBRATIONS. (a) A licensee shall maintain a record of the teletherapy, remote afterloader and gamma stereotactic radiosurgery full calibrations required by s. DHS 157.67 (7) to (9) for 3 years.
(b) The record required under par. (a) shall include all of the following:
1. The date of the calibration.

Unofficial Text (See Printed Volume). Current through date and Register shown on Title Page.

2. The manufacturer's name, model number and serial number for the teletherapy, remote afterloader and gamma stereotactic radiosurgery unit, source and instruments used to calibrate the unit.
3. The results and an assessment of the full calibrations.
4. The results of the autoradiograph required for low dose−rate remote afterloader units.
5. The signature of the authorized medical physicist who performed the full calibration.

(22) RECORDS OF PERIODIC SPOT−CHECKS FOR TELETHERAPY UNITS. (a) A licensee shall retain a record of each periodic spot−check for teletherapy units required by s. DHS 157.67 (10) for 3 years.

(b) The record required under par. (a) shall include all of the following:
1. The date of the spot−check.
2. The manufacturer's name, model number and serial number for the teletherapy unit, source and instrument used to measure the output of the teletherapy unit.
3. An assessment of timer linearity and constancy.
4. The calculated on−off error.
5. A determination of the coincidence of the radiation field and the field indicated by the light beam localizing device.
6. The determined accuracy of each distance measuring and localization device.
7. The difference between the anticipated output and the measured output.
8. Notations indicating the operability of each entrance door electrical interlock, each electrical or mechanical stop, each source exposure indicator light and the viewing and intercom system and doors.
9. The name of the person who performed the periodic spot−check and the signature of the authorized medical physicist who reviewed the record of the spot−check.

(23) RECORDS OF PERIODIC SPOT−CHECKS FOR REMOTE AFTERLOADER UNITS.

(a) A licensee shall retain a record of each spot−check for remote afterloader units required by s. DHS 157.67 (11) for 3 years.

(b) The record required under par. (a) shall include all of the following, as applicable:
1. The date of the spot−check.
2. The manufacturer's name, model number and serial number for the remote afterloader unit and source.
3. An assessment of timer accuracy.
4. Notations indicating the operability of each entrance door electrical interlock, radiation monitors, source exposure indicator lights, viewing and intercom systems and clock and decayed source activity in the unit's computer.
5. The name of the person who performed the periodic spot−check and the signature of the authorized medical physicist who reviewed the record of the spot−check.

(24) RECORDS OF PERIODIC SPOT−CHECKS FOR GAMMA STEREOTACTIC RADIOSURGERY UNITS. (a) A licensee shall retain a record of each spot−check for gamma stereotactic radiosurgery units required by s. DHS 157.67 (12) for 3 years.

(b) The record required under par. (a) shall include all of the following:
1. The date of the spot−check.
2. The manufacturer's name, model number and serial number for the gamma stereotactic radiosurgery unit and the instrument used to measure the output of the unit.
3. An assessment of timer linearity and accuracy.
4. The calculated on−off error.
5. A determination of trunnion centricity.
6. The difference between the anticipated output and the measured output.
7. An assessment of source output against computer calculations.
8. Notations indicating the operability of radiation monitors, helmet microswitches, emergency timing circuits, emergency off buttons, electrical interlocks, source exposure indicator lights, viewing and intercom systems, timer termination, treatment table retraction mechanism and stereotactic frames and localizing devices.
9. The name of the person who performed the periodic spot−check and the signature of the authorized medical physicist who reviewed the record of the spot−check.

(25) RECORDS OF ADDITIONAL TECHNICAL REQUIREMENTS FOR MOBILE REMOTE AFTERLOADER UNITS. (a) A licensee shall retain a record of each check for mobile remote afterloader units required by s. DHS 157.67 (13) for 3 years.

Unofficial Text (See Printed Volume). Current through date and Register shown on Title Page.

(b) The record required under par. (a) shall include all the following:
1. The date of the check.
2. The manufacturer's name, model number and serial number of the remote afterloader unit.
3. Notations accounting for all sources before the licensee departs from a facility.
4. Notations indicating the operability of each entrance door electrical interlock, radiation monitors, source exposure indicator lights, viewing and intercom system, applicators and source transfer tubes and source positioning accuracy.
5. The signature of the person who performed the check.

(26) RECORDS OF SURVEYS OF THERAPEUTIC TREATMENT UNITS. (a) A licensee shall maintain a record of radiation surveys of treatment units made under s. DHS 157.67 (14) for the duration of use of the unit.
(b) The record required under par. (a) shall include all the following:
1. The date of the measurements.
2. The manufacturer's name, model number and serial number of the treatment unit, source and instrument used to measure radiation levels.
3. Each dose rate measured around the source while the unit is in the off position and the average of all measurements.
4. The signature of the person who performed the test.

(27) RECORDS OF 5−YEAR INSPECTION FOR TELETHERAPY AND GAMMA STEREOTACTIC RADIOSURGERY UNITS. (a) A licensee shall maintain a record of the 5−year inspections for teletherapy and gamma stereotactic radiosurgery units required by s. DHS 157.67 (15) for the duration of use of the unit.
(b) The record required under par. (a) shall contain all the following:
1. The inspector's radioactive materials license number.
2. The date of inspection.
3. The manufacturer's name and model number and serial number of both the treatment unit and source.
4. A list of components inspected and serviced, and the type of service.
5. The signature of the inspector.

(28) RECORDS OF DECAY OF STRONTIUM−90 SOURCES FOR OPHTHALMIC TREATMENTS. (a) A licensee shall maintain a record of the activity of a strontium−90 source required by s. DHS 157.65 (6) for the life of the source.
(b) The record required under par. (a) shall include both of the following:
1. The initial activity of the source and date.
2. For each decay calculation, the date and the source activity as determined under s. DHS 157.65 (6).

History: CR 01−108: cr. Register July 2002 No. 559, eff. − see Note at the start of the chapter; **CR 06−021: r. and recr. (14) Register October 2006 No. 610, eff. 11−1−06.**

DHS 157.72 Reports. (1) REPORTS OF MEDICAL EVENTS. (a) A licensee shall report to the department any event, except for events that result from intervention by a patient or human research subject, in which the administration of radioactive material or resulting radiation results in any of the following:
1. A dose that differs from the prescribed dose by more than 0.05 Sv (5 rem) effective dose equivalent, 0.5 Sv (50 rem) to an organ or tissue or 0.5 Sv (50 rem) shallow dose equivalent to the skin and to which any of the following apply:
a. The total dose delivered differs from the prescribed dose by 20% or more.
b. The total dosage delivered differs from the prescribed dosage by 20% or more or falls outside the prescribed dosage range.
c. The fractionated dose delivered differs from the prescribed dose, for a single fraction, by 50% or more.
2. A dose that exceeds 0.05 Sv (5 rem) effective dose equivalent, 0.5 Sv (50 rem) to an organ or tissue or 0.5 Sv (50 rem) shallow dose equivalent to the skin from any of the following:
a. An administration of a wrong pharmaceutical.
b. An administration of a radioactive drug containing radioactive material by the wrong route of administration.
c. An administration of a dose or dosage to the wrong patient or human research subject.
d. An administration of a dose delivered by the wrong mode of treatment.
e. A leaking sealed source.

Unofficial Text (See Printed Volume). Current through date and Register shown on Title Page.

3. A dose to the skin or an organ or tissue other than the treatment site that exceeds by 0.5 Sv (50 rem) to an organ or tissue and 50% or more of the dose expected from the administration defined in the written directive (excluding, for permanent implants, seeds that were implanted in the correct site but migrated outside the treatment site).

(b) A licensee shall report to the department any event resulting from intervention of a patient or human research subject in which the administration of radioactive material or radiation therefrom results or will result in an unintended permanent functional damage to an organ or a physiological system, as determined by a physician.

(c) A licensee shall notify the department by telephone no later than the next calendar day after discovery of the medical event.

Note: Submit report to the Department via telephone at (608) 267-4797 or via facsmilie at (608) 267-3695.

(d) 1. A licensee shall submit a written report to the department within 15 working days after discovery of the medical event.

2. The written report required in subd. 1. shall include all the following:

a. The licensee's name.

b. The name of the prescribing physician.

c. A brief description of the event.

d. Why the event occurred.

e. Any effect on the person who received the administration.

f. Any actions that have been taken or are planned to prevent recurrence.

g. Whether the licensee notified the person or the person's responsible relative or guardian and if not, why not.

h. If there was notification, what information was provided.

3. The report required in subd. 1. may not contain the affected individual's name or any other information that could lead to identification of the person.

Note: Submit written reports to the Department at: Department of Health Services, Radiation Protection Section, P.O. Box 2659, Madison WI 53701−2659.

(e) A licensee shall notify the referring physician of the event and also notify the person who is the subject of the medical event no later than 24 hours after its discovery unless the referring physician personally informs the licensee either that the physician will inform the person or that, based on medical judgement, telling the person would be harmful. A licensee is not required to notify the person without first consulting the referring physician. If the referring physician or the affected person cannot be reached within 24 hours, a licensee shall notify the person as soon as possible thereafter. A licensee may not delay any appropriate medical care for the person, including any necessary remedial care resulting from the medical event, because of any delay in notification. To meet the requirements of this paragraph, the notification of the person who is the subject of the medical event may be made instead to that person's responsible relative or guardian. If a verbal notification is made, a licensee shall inform the person or appropriate responsible relative or guardian that a written description of the event may be obtained from the licensee upon request. A licensee shall provide the written description if requested.

(f) If the person who is the subject of the medical event was notified under par. (d), a licensee shall also furnish within 30 days after discovery of the medical event a written report to the person by sending either of the following:

1. A copy of the report that was submitted to the department.

2. A brief description of both the event and the consequences as they may affect the person.

(g) Aside from the notification requirement, nothing in this subsection affects any rights or duties of a licensee or physician in relation to each other, to any person affected by the medical event or to any individual's responsible relatives or guardians.

(h) A licensee shall retain a record of a medical event under s. DHS 157.71 (4). A copy of the record required under s. DHS 157.71 (4) shall be provided to the referring physician, if other than the licensee, no later then 15 days after the discovery of the event.

(2) REPORT OF A DOSE TO AN EMBRYO OR FETUS OR A NURSING CHILD. (a) A licensee shall report to the department any dose to an embryo or fetus that is greater than 50 mSv (5 rem) dose equivalent that is a result of an administration of radioactive material or radiation from radioactive material to a pregnant individual unless the dose to the embryo or fetus was specifically approved, in advance, by the authorized user.

Unofficial Text (See Printed Volume). Current through date and Register shown on Title Page.

(b) A licensee shall report to the department any dose to a nursing child that is a result of an administration of radioactive material to a breast−feeding individual that meets either of the following criteria:
1. Greater than 50 mSv (5 rem) total effective dose equivalent.
2. Resulted in unintended permanent functional damage to an organ or a physiological system of the child, as determined by a physician.
(c) A licensee shall notify the department by telephone no later than the next calendar day after discovery of a dose to the embryo, fetus or nursing child that requires a report in par. (a) or (b).
(d) A licensee shall submit a written report to the department within 15 days after discovery of a dose to the embryo, fetus or nursing child that requires a report in par. (a) or (b). The written report shall include all of the following information:
1. The licensee's name.
2. The name of the prescribing physician.
3. A brief description of the event.
4. Why the event occurred.
5. The effect, if any, on the embryo, fetus or the nursing child.
6. What actions, if any, have been taken or are planned to prevent recurrence.
7. Certification that the licensee notified the pregnant individual or mother or the mother's or child's responsible relative or guardian, and if not, why not.
8. The report may not contain the individual's or child's name or any other information that could lead to identification of the individual or child.
(e) A licensee shall provide notification of the event to the referring physician and also notify the pregnant individual or mother, both hereafter referred to as the mother, no later than 24 hours after discovery of an event that would require reporting under par. (a) or (b), unless the referring physician personally informs the licensee either that he or she will inform the mother or that, based on medical judgment, telling the mother would be harmful. A licensee is not required to notify the mother without first consulting with the referring physician. If the referring physician or mother cannot be reached within 24 hours, a licensee shall make the appropriate notifications as soon as possible thereafter. A licensee may not delay any appropriate medical care for the embryo, fetus or nursing child, including any necessary remedial care as a result of the event, because of any delay in notification. To meet the requirements of this paragraph, the notification may be made to the mother's or child's responsible relative or guardian instead of the mother. If a verbal notification is made, the licensee shall inform the mother, or the mother's or child's responsible relative or guardian, that a written description of the event can be obtained from the licensee upon request. A licensee shall provide such a written description if requested.
(f) A licensee shall do all the following:
1. Annotate a copy of the report provided to the department with all of the following information:
a. Name of the pregnant individual or the nursing child who is the subject of the event.
b. Social security number or other identification number, if one has been assigned, of the pregnant individual or the nursing child who is the subject of the event.
2. Provide a copy of the annotated report to the referring physician, if other than the licensee, no later than 15 days after the discovery of the event.
(g) A licensee shall retain a record of a dose to an embryo, fetus or a nursing child under s. DHS 157.71 (5).
(3) REPORTS OF LEAKING SOURCES. A licensee shall submit a written report to the department within 5 working days if a leakage test required by s. DHS 157.62 (5) reveals the presence of 185 Bq (0.005 μCi) or more of removable contamination. The written report shall include the model number and serial number, if assigned, of the leaking source, the radionuclide and its estimated activity, the results of the test, the date of the test and the action taken.
History: CR 01−108: cr. Register July 2002 No. 559, eff. − see Note at the start of the chapter; **CR 06−021: r. and recr. (1) (a) 3., (h) and (2) Register October 2006 No. 610, eff. 11−1−06.**

Subchapter VII — Radiation Safety Requirements for Irradiators

DHS 157.73 Radiation safety requirements. (1) PERFORMANCE CRITERIA FOR SEALED SOURCES. (a) A sealed source installed in an irradiator shall meet all of the following requirements:
1. Be evaluated and receive a certificate of registration under 10 CFR 32.210 or the equivalent agreement state regulation.
2. Be doubly encapsulated.

Unofficial Text (See Printed Volume). Current through date and Register shown on Title Page.

3. Use radioactive material that is as nondispersible and insoluble as practical if the source is used in a wet−source−storage or wet−source−change irradiator.
4. Be encapsulated in a material resistant to general corrosion and to localized corrosion such as 316L stainless steel or other material with equivalent resistance if the sources are for use in irradiator pools.
5. In prototype testing of the sealed source, be leak tested and found leak−free after each of the tests in par. (b).
(b) A sealed source used in an irradiator shall be subjected to all of the following tests prior to use:
1. 'Temperature.' The test source shall be held at −40°C for 20 minutes, 600°C for one hour, and then be immediately subjected to thermal shock test with a temperature drop from 600°C to 20°C within 15 seconds.
2. 'Pressure.' The test source shall be twice subjected for at least 5 minutes to an absolute external pressure of 2 million newtons per square meter.
3. 'Impact.' A 2 kilogram steel weight, 2.5 centimeters in diameter, shall be dropped from a height of one meter on to the test source.
4. 'Vibration.' The test source shall be subjected 3 times for 10 minutes each to vibrations sweeping from 25 hertz to 500 hertz with a peak amplitude of 5 times the acceleration of gravity. In addition, each test source shall be vibrated for 30 minutes at each resonant frequency found.
5. 'Puncture.' A 50 gram weight and pin, 0.3 centimeter pin diameter, shall be dropped from a height of one meter on to the test source.
6. 'Bend.' If the length of the source is more than 15 times larger than the minimum cross−sectional dimension, the test source shall be subjected to a force of 2000 newtons at its center equidistant from 2 support cylinders, the distance between which is 10 times the minimum cross−sectional dimension of the source.
(2) ACCESS CONTROL. (a) Each entrance to a radiation room at a panoramic irradiator shall have a door or other physical barrier to prevent inadvertent entry of personnel when the sources are not in the shielded position. Product conveyor systems may serve as barriers as long as they reliably and consistently function as a barrier. It shall be impossible to move the sources out of their shielded position if the door or barrier is open. Opening the door or barrier while the sources are exposed shall cause the sources to return promptly to the shielded position. The personnel entrance door or barrier shall have a lock that is operated by the same key used to move the sources. The control panel lock shall be designed so that the key cannot be removed unless the sources have been returned to the shielded position. The doors and barriers may not prevent any person in the radiation room from leaving.
(b) Each entrance to a radiation room at a panoramic irradiator shall have an independent backup access control to detect personnel entry while the sources are exposed. Detection of entry while the sources are exposed shall cause the sources to return to their fully shielded position and shall activate a visible and audible alarm to make the person entering the room aware of the hazard. The alarm shall also alert at least one other person who is on−site of the entry. The person alerted shall be trained on how to respond to the alarm and prepared to promptly render or summon assistance.
(c) A radiation monitor shall be provided to detect the presence of high radiation levels in the radiation room of a panoramic irradiator before personnel entry. The monitor shall be integrated with personnel access door locks to prevent room access when radiation levels are high. Attempted personnel entry while the monitor measures high radiation levels shall activate the alarm described in par. (b). The monitor may be located in the entrance, normally referred to as the maze, but not in the direct radiation beam.
(d) Before the sources move from their shielded position in a panoramic irradiator, the source control shall automatically activate conspicuous visible and audible alarms to alert people in the radiation room that the sources will be moved from their shielded position. The alarms shall give persons enough time to leave the room before the sources leave the shielded position.
(e) Each radiation room of a panoramic irradiator shall have a clearly visible and readily accessible control that allows a person in the room to make the sources return to their fully shielded position.
(f) Each radiation room of a panoramic irradiator shall contain a control that prevents the sources from moving from the shielded position unless the control has been activated and the door or barrier to the radiation room has been closed within a preset time after activation of the control.
(g) Each entrance to the radiation room of a panoramic irradiator and each entrance to the area within the personnel access barrier of an underwater irradiator shall have a sign bearing the radiation symbol and the

Unofficial Text (See Printed Volume). Current through date and Register shown on Title Page.

words, "Caution (or danger), radioactive material." A panoramic irradiator shall have a sign stating "Grave (or Extreme) danger, very high radiation area," but the sign may be removed, covered or otherwise made inoperative when the sources are fully shielded.

(h) If the radiation room of a panoramic irradiator has roof plugs or movable shielding, no person may operate the irradiator unless the shielding is in its proper location. The requirement may be met by interlocks that prevent operation if shielding is not placed properly or by an operating procedure requiring inspection of shielding before operating.

(i) An underwater irradiator shall have a personnel access barrier around the pool that shall be locked to prevent access when the irradiator is not attended. Only operators or facility management may have access to keys that operate the personnel access barrier. There shall be an intrusion alarm to detect unauthorized entry when the personnel access barrier is locked. Activation of the intrusion alarm shall alert a person who is not necessarily on−site but who is prepared to respond or summon assistance.

(3) SHIELDING. (a) The radiation dose rate in areas that are normally occupied during operation of a panoramic irradiator may not exceed 0.02 millisievert (2 mrem) per hour at any location 30 centimeters or more from the wall of the room when the sources are exposed. The dose rate shall be averaged over an area not to exceed 100 square centimeters having no linear dimension greater than 20 centimeters. Any area where the radiation dose rate exceeds 0.02 millisievert (2 mrem) per hour shall be locked, roped off or posted.

(b) The radiation dose at 30 centimeters over the edge of the pool of a pool irradiator may not exceed 0.02 millisievert (2 mrem) per hour when the sources are in the fully shielded position.

(c) The radiation dose rate at one meter from the shield of a dry−source−storage panoramic irradiator when the source is shielded may not exceed 0.02 millisievert (2 mrem) per hour and at 5 centimeters from the shield may not exceed 0.2 millisievert (20 mrem) per hour.

(4) FIRE PROTECTION. (a) The radiation room of a panoramic irradiator shall have heat and smoke detectors. The detectors shall activate an audible alarm. The alarm shall be capable of alerting a person who is prepared to summon assistance promptly. The sources shall automatically become fully shielded if a fire is detected.

(b) The radiation room of a panoramic irradiator shall be equipped with a fire extinguishing system capable of extinguishing a fire without the entry of personnel into the room. The system for the radiation room shall have a shut−off valve to control flooding into unrestricted areas.

(5) RADIATION MONITORS. (a) An irradiator with an automatic product conveyor system shall have a radiation monitor with an audible alarm located to detect loose radioactive sources that are carried toward the product exit. If the monitor detects a source, an alarm shall sound and product conveyors shall stop automatically. The alarm shall be capable of alerting a person in the facility who is prepared to summon assistance. An underwater irradiator in which the product moves within an enclosed stationary tube is exempt from the requirements of this paragraph.

(b) An underwater irradiator that is not in a shielded radiation room shall have a radiation monitor over the pool to detect abnormal radiation levels. The monitor shall have an audible alarm and a visible indicator at entrances to the personnel access barrier around the pool. The audible alarm may have a manual shut−off. The alarm shall be capable of alerting a person who is prepared to respond promptly.

(6) CONTROL OF SOURCE MOVEMENT. (a) The mechanism that moves the sources of a panoramic irradiator shall require a key to actuate. Actuation of the mechanism shall cause an audible signal to indicate that the sources are leaving the shielded position. Only one key may be in use at any time, and only operators or facility management may possess it. The key shall be attached to a portable radiation survey meter by a chain or cable. The lock for source control shall be designed so that the key may not be removed if the sources are in an unshielded position. The door to the radiation room shall require the same key.

(b) The console of a panoramic irradiator shall have a source position indicator that indicates when the sources are in the fully shielded position, in transit and exposed.

(c) The control console of a panoramic irradiator shall have a control that promptly returns the sources to the shielded position.

(d) The function of each control for a panoramic irradiator shall be clearly marked.

(7) IRRADIATOR POOLS. (a) An irradiator pool shall be one of the following:

1. Constructed with a water−tight stainless steel liner or a liner metallurgically compatible with other components in the pool.

Unofficial Text (See Printed Volume). Current through date and Register shown on Title Page.

2. Constructed so that there is a low likelihood of substantial leakage and with a surface designed to facilitate decontamination.
(b) A licensee shall have a method to safely store the sources during repairs of the pool.
(c) An irradiator pool shall have no outlets more than 0.5 meter below the normal low water level that may allow water to drain out of the pool. Pipes that have intakes more than 0.5 meter below the normal low water level and that may act as siphons shall have siphon breakers to prevent the siphoning of pool water.
(d) A method shall be available to replenish water losses from the pool.
(e) A visible indicator shall be provided in a clearly observable location to indicate if the pool water level is below the normal low water level or above the normal high water level.
(f) An irradiator pool shall be equipped with a purification system designed to be capable of maintaining the water during normal operation at a conductivity of 20 microsiemens per centimeter or less and with a clarity so that the sources are clearly visible.
(g) A physical barrier, such as a railing or cover, shall be used around or over irradiator pools during normal operation to prevent personnel from accidentally falling into the pool. The barrier may be removed during maintenance, inspection and service operations.
(h) If long−handled tools or poles are used in an irradiator pool, the radiation dose rate to the operator at the handling areas of the tools may not exceed 0.02 millisievert (2 mrem) per hour.
(8) SOURCE RACK PROTECTION. If the product to be irradiated moves on a product conveyor system, the source rack and the mechanism that moves the rack shall be protected by a carrier or guides to prevent products and product carriers from hitting or touching the rack or mechanism.
(9) POWER FAILURES. (a) If electrical power at a panoramic irradiator is lost for longer than 10 seconds, the sources shall automatically return to the shielded position.
(b) The lock on the door of the radiation room of a panoramic irradiator shall remain locked in the event of a power failure.
(c) During a power failure, the area of any irradiator where sources are located may be entered only when using an operable and calibrated radiation survey meter.
(10) DESIGN REQUIREMENTS. An irradiator shall meet all of the following design requirements:
(a) *Shielding.* For a panoramic irradiator, a licensee shall design shielding walls to meet generally accepted building code requirements for reinforced concrete and design the walls, wall penetrations, and entranceways to meet the radiation shielding requirements of sub. (3). If the irradiator will use more than 2 x 1017 becquerels (5 million Ci) of activity, a licensee shall evaluate the effects of heating of the shielding walls by the irradiator sources.
(b) *Foundations.* For a panoramic irradiator, a licensee shall design the foundation, with consideration given to soil characteristics, to ensure that the foundation is adequate to support the weight of the facility shield walls.
(c) *Pool integrity.* For a pool irradiator, a licensee shall design the pool to ensure all of the following:
1. That the pool is leak resistant.
2. That the pool is strong enough to bear the weight of the pool water and shipping casks.
3. That a dropped shipping cask would not fall on sealed sources.
4. That all outlets or pipes meet the requirements of sub. (7).
5. That metal components are metallurgically compatible with other components in the pool.
(d) *Water handling system.* For a pool irradiator, a licensee shall verify that the design of the water purification system is adequate to meet the requirements of sub. (7) (f). The system shall be designed so that water leaking from the system does not drain to unrestricted areas without being monitored.
(e) Radiation monitors. For all irradiators, a licensee shall evaluate the location and sensitivity of the radiation monitor to detect sources carried by the product conveyor system as required by sub. (5) (a). A licensee shall verify that the product conveyor is designed to stop before a source on the product conveyor would cause a radiation overexposure to any person. For a pool irradiator, if the licensee uses radiation monitors to detect contamination under sub. (16) (b), the licensee shall verify that the design of radiation monitoring systems to detect pool contamination includes sensitive detectors located close to where contamination is likely to concentrate.
(f) *Source rack.* For a pool irradiator, a licensee shall verify that there are no crevices on the source or between the source and source holder that would promote corrosion on a critical area of the source. For a panoramic irradiator, a licensee shall determine that source rack drops due to loss of power will not damage the source rack and that source rack drops due to failure of cables, or alternate means of support, will not

Unofficial Text (See Printed Volume). Current through date and Register shown on Title Page.

cause loss of integrity of sealed sources. For a panoramic irradiator, a licensee shall review the design of the mechanism that moves the sources to ensure that the likelihood of a stuck source is low and that, if the rack sticks, a means exists to free the rack with minimal risk to personnel.

(g) *Access control.* For a panoramic irradiator, a licensee shall verify from the design and logic diagram that the access control system meets the requirements of sub. (2).

(h) *Fire protection.* For a panoramic irradiator, a licensee shall verify that the number, locations, and spacing of the smoke and heat detectors are appropriate to detect fires and that the detectors are protected from mechanical and radiation damage. A licensee shall verify that the design of the fire extinguishing system provides the necessary discharge patterns, densities, and flow characteristics for complete coverage of the radiation room and that the system is protected from mechanical and radiation damage.

(i) *Source return.* For a panoramic irradiator, a licensee shall verify that the source rack will automatically return to the fully shielded position if power is lost for more than 10 seconds.

(j) *Seismic.* For a panoramic irradiator to be built in seismic areas where the probability of a horizontal acceleration in rock of more than 0.3 times the acceleration of gravity in 250 years is greater than 10%, a licensee shall design the reinforced concrete radiation shields to retain their integrity in the event of an earthquake by designing the irradiator to the seismic requirements of local building codes.

(k) *Wiring.* For a panoramic irradiator, a licensee shall verify that electrical wiring and electrical equipment in the radiation room are selected to minimize failures due to prolonged exposure to radiation.

(11) CONSTRUCTION MONITORING AND ACCEPTANCE TESTING. An irradiator shall meet all of the following requirements prior to loading sources:

(a) *Shielding.* For a panoramic irradiator, a licensee shall monitor the construction of the shielding to verify that its construction meets design specifications and local building code requirements for reinforced concrete.

(b) *Foundations.* For a panoramic irradiator, a licensee shall monitor the construction of the foundations to verify that their construction meets design specifications.

(c) *Pool integrity.* For a pool irradiator, a licensee shall verify that the pool meets design specifications and shall test the structural integrity of the pool and its ability to hold water. A licensee shall verify that outlets and pipes meet the requirements of sub. (7) (c).

(d) *Water handling system.* For a pool irradiator, a licensee shall verify that the water purification system, the conductivity meter, and the water level indicators operate properly.

(e) *Radiation monitors.* For all irradiators, a licensee shall verify the proper operation of the radiation monitor to detect sources carried on the product conveyor system and the related alarms and interlocks required by sub. (5) (a). For a pool irradiator, a licensee shall verify the proper operation of the radiation monitors and the related alarm, if used, to meet sub. (16) (b). For an underwater irradiator, a licensee shall verify the proper operation of the over−the−pool monitor, alarms, and interlocks required by sub. (5) (b).

(f) *Source rack.* For a panoramic irradiator, a licensee shall test the movement of the source racks for proper operation prior to source loading. The testing shall include source rack lowering due to simulated loss of power. For all irradiators with a product conveyor system, a licensee shall observe and test the operation of the conveyor system to assure that the requirements in sub. (8) are met for protection of the source rack and the mechanism that moves the rack. The testing shall include tests of any limit switches and interlocks used to protect the source rack and mechanism that moves that rack from moving product carriers.

(g) *Access control.* For a panoramic irradiator, a licensee shall test the completed access control system to assure that the control system functions as designed and that all alarms, controls, and interlocks work properly.

(h) *Fire protection.* For a panoramic irradiator, a licensee shall test the ability of the heat and smoke detectors to detect a fire, to activate alarms, and to cause the source rack to automatically become fully shielded. A licensee shall test the operability of the fire extinguishing system.

(i) *Source return.* For a panoramic irradiator, the licensee shall demonstrate that the source racks may be returned to their fully shielded positions without power.

(j) *Computer systems.* For a panoramic irradiator that uses a computer system to control the access control system, a licensee shall verify that the access control system will operate properly if power is lost and shall verify that the computer has security features that prevent an irradiator operator from commanding the computer to override the access control system when the system is required to be operable.

Unofficial Text (See Printed Volume). Current through date and Register shown on Title Page.

(k) *Wiring.* For a panoramic irradiator, a licensee shall verify that the electrical wiring and electrical equipment that were installed meet the design specifications.

(12) TRAINING. (a) Before a person may act as an irradiator operator without a supervisor present, the person shall be instructed in all the following:

1. The fundamentals of radiation protection applied to irradiators. The fundamentals shall include the differences between external radiation and radioactive contamination, units of radiation dose, dose limits, why large radiation doses must be avoided, how shielding and access controls prevent large doses, how an irradiator is designed to prevent contamination, the proper use of survey meters and personnel dosimeters, other radiation safety features of an irradiator and the basic function of the irradiator.
2. The requirements of subch. X and this subchapter.
3. The operation of the irradiator.
4. Operating and emergency procedures listed in sub. (13) that the person is responsible for performing.
5. Case histories of accidents or problems involving irradiators.

(b) Before a person may act as an irradiator operator without a supervisor present, the person shall pass a written test on the instruction received consisting primarily of questions based on the licensee's operating and emergency procedures that the person is responsible for performing and other operations necessary to safely operate the irradiator without supervision.

(c) Before a person may act as an irradiator operator without a supervisor present, the person shall have received on–the–job training or simulator training in the use of the irradiator as described in the license application. The person shall also demonstrate the ability to perform those portions of the operating and emergency procedures that he or she is to perform.

(d) A licensee shall conduct safety reviews for irradiator operators at least annually. At the review, the licensee shall give each operator a written test on the information presented during annual safety training. Each safety review shall include, to the extent appropriate, all of the following:

1. Any changes in operating and emergency procedures since the last review.
2. Any changes in regulations and license conditions since the last review.
3. Any reports on recent accidents, mistakes or problems that have occurred at irradiators.
4. Results of inspections of operator safety performance.
5. Results of the facility's inspection and maintenance checks.
6. A drill to practice an emergency or abnormal event procedure.

(e) A licensee shall evaluate the safety performance of each irradiator operator at least annually to ensure that regulations, license conditions and operating, safety and emergency procedures are followed. The licensee shall discuss the results of the evaluation with the operator and shall instruct the operator on how to correct any mistakes or deficiencies observed.

(f) Persons who will be permitted unescorted access to the radiation room of the irradiator or the area around the pool of an underwater irradiator, but who have not received the training required for operators and the radiation safety officer, shall be instructed and tested in any precautions they should take to avoid radiation exposure, any procedures or parts of procedures listed in sub. (13) that they are expected to perform or comply with and their proper response to alarms required in this subchapter. Tests may be oral.

(g) Persons who must be prepared to respond to alarms required by subs. (2) (b) and (i), (4) (a), (5) (a) and (b), and (16) (b) shall be trained and tested on how to respond. Each person shall be retested at least annually. Tests may be oral.

(13) OPERATING AND EMERGENCY PROCEDURES. (a) A licensee shall have and follow written operating procedures for all the following:

1. Operation of the irradiator including entering and leaving the radiation room.
2. Use of personnel dosimeters.
3. Surveying the shielding of panoramic irradiators.
4. Monitoring pool water for contamination while the water is in the pool and before release of pool water to unrestricted areas.
5. Leak testing of sources.
6. Inspection and maintenance checks required by sub. (17).
7. Loading, unloading and repositioning sources if the operations will be performed by the licensee.
8. Inspection of movable shielding required by sub. (2), if applicable.

(b) A licensee shall have and follow emergency or abnormal event procedures, appropriate for the irradiator type, for all of the following situations:

Unofficial Text (See Printed Volume). Current through date and Register shown on Title Page.

1. Sources stuck in the unshielded position.
2. Personnel overexposures.
3. A radiation alarm from the product exit portal monitor or pool monitor.
4. Detection of leaking sources, pool contamination or alarm caused by contamination of pool water.
5. A low or high water level indicator, an abnormal water loss or leakage from the source storage pool.
6. A prolonged loss of electrical power.
7. A fire alarm or explosion in the radiation room.
8. An alarm indicating unauthorized entry into the radiation room, area around pool or another alarmed area.
9. Natural phenomena, including an earthquake, a tornado, flooding or other phenomena as appropriate for the geographical location of the facility.
10. The jamming of automatic conveyor systems.

(c) A licensee may revise operating and emergency procedures without department approval only if all of the following conditions are met:
1. The revisions do not reduce the safety of the facility.
2. The revisions are consistent with the outline or summary of procedures submitted with the license application.
3. The revisions have been reviewed and approved by the radiation safety officer.
4. The users or operators are instructed and tested on the revised procedures before the procedures are implemented.

(14) PERSONNEL MONITORING. (a) Any irradiator operator shall wear either a film badge, a thermoluminescent dosimeter or similar approved device while operating a panoramic irradiator or while in the area around the pool of an underwater irradiator. The film badge or TLD processor shall be accredited by the national voluntary laboratory accreditation program for high energy photons in the normal and accident dose ranges. Each film badge or TLD shall be assigned to and worn by only one person. Film badges shall be processed at least monthly and TLDs shall be processed at least quarterly.

Note: See s. DHS 157.25 (1) (c) for instructions concerning dosimetry processing.

(b) A person other than an irradiator operator who enters the radiation room of a panoramic irradiator shall wear a dosimeter, which may be a pocket dosimeter. For groups of visitors, only 2 people who enter the radiation room are required to wear dosimeters.

(c) If pocket dosimeters are used to meet the requirements of par. (b), a check of their response to radiation shall be performed at least annually. Acceptable dosimeters shall read within plus or minus 20% of the true radiation dose.

(15) RADIATION SURVEYS. (a) A radiation survey of the area outside the shielding of the radiation room of a panoramic irradiator shall be conducted with the sources in the exposed position before the facility starts to operate. A radiation survey of the area above the pool of pool irradiators shall be conducted after the sources are loaded but before the facility starts to operate. Additional radiation surveys of the shielding shall be performed at intervals not to exceed 3 years and before resuming operation after addition of new sources or any modification to the radiation room shielding or structure that might increase dose rates.

(b) If the radiation levels specified in sub. (3) are exceeded, the facility shall be modified to comply with the requirements in sub. (3).

(c) Portable radiation survey meters shall be calibrated at a frequency not to exceed 13 months to an accuracy of plus or minus 20% for the gamma energy of the sources in use. The calibration shall be performed at 2 points on each scale or, for digital instruments, at one point per decade over the range that will be used. Portable radiation survey meters shall be of a type that does not fail and read zero at high radiation dose rates.

(d) Water from the irradiator pool, other potentially contaminated liquids and sediments from pool vacuuming shall be monitored for radioactive contamination before release to unrestricted areas. Radioactive concentrations may not exceed those specified in Table II, Column 2 or Table III of Appendix E.

(e) Before releasing resins for unrestricted use, the resins shall be monitored before release in an area with a background level less than 0.5 microsievert (0.05 mrem) per hour. The resins may be released only if the survey does not detect radiation levels above background radiation levels. The survey meter used shall be capable of detecting radiation levels of 0.5 microsievert (0.05 mrem) per hour.

Unofficial Text (See Printed Volume). Current through date and Register shown on Title Page.

(16) DETECTION OF LEAKING SOURCES. (a) Each dry−source−storage sealed source shall be tested for leakage at intervals not to exceed 6 months using a leak test kit or a method approved by the department, the NRC, another agreement state or a licensing state. In the absence of a certificate from a transferor that a test has been made within the 6 months before the transfer, the sealed source may not be used until tested. The test shall be capable of detecting the presence of 200 becquerels (0.005 μCi) of radioactive material and shall be performed by a person approved by the department, the NRC, another agreement state or a licensing state to perform the test.

(b) For a pool irradiator, sources may not be put into the pool unless a licensee tests the sources for leaks or has a certificate from a transferor that a leak test has been performed within the 6 months before the transfer. Water from the pool shall be checked for contamination each day the irradiator operates. The check may be done either by using a radiation monitor on a pool water circulating system or by analysis of a sample of pool water. If a check for contamination is performed by analysis of a sample of pool water, the results of the analysis shall be available within 24 hours. If the licensee uses a radiation monitor on a pool water circulating system, the detection of above normal radiation levels shall activate an alarm. The alarm set−point shall be set as low as practical, but high enough to avoid false alarms. A licensee may reset the alarm set−point to a higher level if necessary to operate the pool water purification system to clear up contamination in the pool if specificallyprovided for in written emergency procedures.

(c) If a leaking source is detected, a licensee shall arrange to remove the leaking source from service and have it decontaminated, repaired or disposed of by a department, NRC, another agreement state or a licensing state licensee authorized to perform decontamination, repair or disposal. A licensee shall promptly check its personnel, equipment, facilities and irradiated product for radioactive contamination. No product may be shipped until the product has been checked and found free of contamination.

If a product has been shipped that may have been inadvertently contaminated, the licensee shall arrange to locate and survey that product for contamination. If any personnel are found to be contaminated, decontamination shall be performed immediately. If contaminated equipment, facilities or products are found, a licensee shall arrange to have the equipment, facilities or products decontaminated or disposed of by the department, the U.S. nuclear regulatory commission, another agreement state or a licensing state licensee authorized to perform decontamination or disposal. If a pool is contaminated, a licensee shall arrange to clean the pool until the contamination levels do not exceed the appropriate concentration in Table II, Column 2 of Appendix E.

(17) INSPECTION AND MAINTENANCE. (a) A licensee shall perform inspection and maintenance checks that include each of the following at the frequency specified in the license or license application:

1. Operability of each aspect of the access control system required by sub. (2).
2. Functioning of the source position indicator required by sub. (6) (b).
3. Operability of the radiation monitor for radioactive contamination in pool water required by sub. (16) (b) using a radiation check source, if applicable.
4. Operability of the over−pool radiation monitor at underwater irradiators as required by sub. (5) (b).
5. Operability of the product exit monitor required by sub. (5) (a).
6. Operability of the emergency source return control required by sub. (6) (c).
7. Visual inspection of leak−tightness of systems through which pool water circulates.
8. Operability of the heat and smoke detectors and extinguisher system required by sub. (4), without turning extinguishers on.
9. Operability of the means of pool water replenishment required by sub. (7) (d).
10. Operability of the indicators of high and low pool water levels required by sub. (7) (e).
11. Operability of the intrusion alarm required by sub. (2) (i), if applicable.
12. Functioning and wear of the system, mechanisms and cables used to raise and lower sources.
13. Condition of the barrier to prevent products from hitting the sources or source mechanism as required by sub. (8).
14. Amount of water added to the pool to determine if the pool is leaking.
15. Electrical wiring on required safety systems for radiation damage.
16. Pool water conductivity measurements and analysis as required by sub. (18) (b).

(b) Malfunctions and defects found during inspection and maintenance checks shall be repaired within time frames specified in the license or license application.

(18) POOL WATER PURITY. (a) A pool water purification system shall maintain the conductivity of the pool water below 20 microsiemens per centimeter under normal circumstances. If pool water conductivity

Unofficial Text (See Printed Volume). Current through date and Register shown on Title Page.

rises above 20 microsiemens per centimeter, a licensee shall take prompt actions to lower the pool water conductivity and shall take corrective actions to prevent future recurrences.
(b) A licensee shall measure the pool water conductivity frequently enough, but no less than weekly, to assure that the conductivity remains below 20 microsiemens per centimeter. Conductivity meters must be calibrated at least annually.
(19) ATTENDANCE DURING OPERATION. (a) Both an irradiator operator and at least one other person who is trained on how to respond and prepared to promptly render or summon assistance if the access control alarm sounds shall be present on site during any of the following times:
1. Whenever the irradiator is operated using an automatic product conveyor system.
2. Whenever the product is moved into or out of the radiation room when the irradiator is operated in a batch mode.
(b) A person who has received the training on how to respond to alarms described in sub. (12) (g) shall be on site at a panoramic irradiator at which product is exposed to radiation with no movement of the product.
(c) At an underwater irradiator, an irradiator operator shall be present at the facility whenever the product is moved into or out of the pool. Persons who move the product into or out of the pool of an underwater irradiator need not be qualified as irradiator operators, but shall have received the training described in sub. (12) (f) and (g). Static irradiations may be performed without a person present at the facility.
(20) ENTERING AND LEAVING THE RADIATION ROOM. (a) Upon first entering the radiation room of a panoramic irradiator after an irradiation, the irradiator operator shall use a survey meter to determine that the source has returned to its fully shielded position. The operator shall check the functioning of the survey meter with a radiation check source prior to entry.
(b) Before exiting from and locking the door to the radiation room of a panoramic irradiator prior to a planned irradiation, the irradiator operator shall do all the following:
1. Visually inspect the entire radiation room to verify that no one else is in it.
2. Activate a control in the radiation room that permits the sources to be moved from the shielded position only if the door to the radiation room is locked within a preset time after setting the control.
(c) During a power failure, the area around the pool of an underwater irradiator may not be entered without using an operable and calibrated radiation survey meter unless the over−the−pool monitor required by sub. (5) (b) is operating with backup power.
(21) IRRADIATION OF EXPLOSIVE OR FLAMMABLE MATERIALS. (a) Irradiation of explosive material is prohibited unless a licensee has received prior written authorization from the department. Authorization may not be granted unless a licensee demonstrates that detonation of the explosive would not rupture the sealed sources, injure personnel, damage safety systems or cause radiation overexposures of personnel.
(b) Irradiation of more than small quantities of flammable material with a flash point below 140°F is prohibited in panoramic irradiators unless a licensee has received prior written authorization from the department. Authorization may not be granted unless a licensee demonstrates that a fire in the radiation room could be controlled without damage to sealed sources or safety systems and without radiation overexposures of personnel.
(22) RECORDS AND RETENTION PERIODS. A licensee shall maintain all the following records at the irradiator for the periods specified:
(a) A copy of the license, the license conditions, documents incorporated into the license by reference and amendments thereto until superseded by new documents or until the department terminates the license for documents not superseded.
(b) Records of each individual's training, tests and safety reviews provided to meet the requirements of sub. (12) (a) to (d), (f) and (g) until 3 years after the person terminates work.
(c) Records of the annual evaluations of the safety performance of irradiator operators required by sub. (12) (e) for 3 years after the evaluation.
(d) A copy of the current operating and emergency procedures required by sub. (13) until superseded or until the department terminates the license. Records of the radiation safety officer's review and approval of changes in procedures as required by sub. (13) (c) 3. shall be retained for 3 years from the date of the change.
(e) Dosimetery results required by sub. (14) (a) and (b) until the department terminates the license.
(f) Records of radiation surveys required by sub. (15) for 3 years from the survey date.

Unofficial Text (See Printed Volume). Current through date and Register shown on Title Page.

(g) Records of radiation survey meter calibrations required by sub. (15) and pool water conductivity meter calibrations required by sub. (18) (b) until 3 years from the calibration date.
(h) Records of the results of leak tests required by sub. (16) (a) and the results of contamination checks required by sub. (16) (b) for 3 years from the date of each test.
(i) Records of inspection and maintenance checks required by sub. (17) for 3 years.
(j) Records of major malfunctions, significant defects, operating difficulties or irregularities, and major operating problems that involve required radiation safety equipment for 3 years after repairs are completed.
(k) Records of the receipt, transfer and disposal of all licensed sealed sources as required by s. DHS 157.13 (15) and (18).
(l) Records on the design checks required by sub. (10) and the construction control checks as required by sub. (11) until the license is terminated. The records shall be signed and dated. The title or qualification of the person signing shall be included.
(m) Records related to decommissioning of the irradiator as required by s. DHS 157.15 (7).
(23) REPORTS. (a) In addition to the reporting requirements in other parts of this chapter, a licensee shall report to the department all of the following events:
1. Source stuck in an unshielded position.
2. Any fire or explosion in a radiation room.
3. Damage to the source racks.
4. Failure of the cable or drive mechanism used to move the source racks.
5. Inoperability of the access control system.
6. Detection of radiation source by the product exit monitor.
7. Detection of radioactive contamination attributable to licensed radioactive material.
8. Structural damage to the pool liner or walls.
9. Water loss or leakage from the source storage pool, greater than the irradiator pool design parameters submitted by the licensee or applicant.
10. Pool water conductivity exceeding 100 microsiemens per centimeter.
(b) For any event in par. (a), a licensee shall provide a telephone report within 24 hours that meets the requirements of s. DHS 157.32 (2) and a written report within 30 days that meets the requirements of s. DHS 157.32 (3).
History: CR 01−108: cr. Register July 2002 No. 559, eff. − see Note at the start of the chapter; **CR 06−021: am. (15) (c), (22) (k) and (m) Register October 2006 No. 610, eff. 11−1−06.**

Subchapter VIII — X−ray Device Requirements

DHS 157.74 Administrative requirements. (1) GENERAL. The registrant shall be responsible for directing the operation of the x−ray systems under their administrative control. The registrant or the registrant's agent shall ensure the requirements of this section are met. An x−ray system shall meet the provisions of this subchapter to be operated for diagnostic or screening purposes. All images, hard copy or electronic, shall be interpreted by a licensed practitioner for the patient record.
(2) RADIATION SAFETY REQUIREMENTS. (a) Each individual who operates x−ray equipment shall be instructed in the safe operating procedures for each specific device and be competent in the safe use of the equipment as determined by the registrant.
(b) A chart shall be available near the control panel of a diagnostic x−ray system that specifies, for all examinations performed with that system, all of the following information:
1. Patient's body part to be examined and anatomical size, body part thickness or, for pediatrics, age versus technique factors to be utilized.
2. Type and size of the film or film−screen combination to be used.
3. Type and focal distance of the grid to be used, if any.
4. Except for dental intra−oral radiography, source to image receptor distance to be used.
5. Type and location of placement of patient shielding to be used.
Note: This chart may be electronic in the form of pre−programmed controls.
(c) The registrant of a facility shall create and make available to x−ray operators written safety procedures, including patient holding procedures and any restrictions of the operating technique required for the safe operation of the particular x−ray system. The operator shall be able to demonstrate familiarity with these procedures.

Unofficial Text (See Printed Volume). Current through date and Register shown on Title Page.

(d) Only the staff, ancillary personnel or other persons required for the medical procedure or training may be in the room during the radiographic exposure. Other than the patient, the following applies to all persons in the room:
1. All persons shall be positioned such that no part of the body will be struck by the useful beam unless protected by not less than 0.5 millimeter lead equivalent material. If the hands must be in the beam and unprotected, a ring badge on the hand in the beam shall be worn unless contraindicated by the clinical procedure.
2. All persons, including any patients who cannot be removed from the room, shall be protected from the direct scatter radiation by whole body protective barriers of not less than 0.25 millimeter lead equivalent material or shall be so positioned that all parts of the person's body are at least 2 meters from all of the following:
a. The tube head.
b. The direct beam.
c. The nearest part of the examined patient's body being struck by the useful beam.
3. Operators of c−arm configuration units which do not operate at a tube current in excess of 0.2 mA are exempt from the requirement to wear a leaded apron, provided the operator wears a personnel dosimeter as required under s. DHS 157.25 (2).
(e) Gonad shielding of not less than 0.5 millimeter lead equivalent material shall be used for human patients who have not passed the reproductive age during radiographic procedures in which the gonads are in the useful beam, except for cases in which the shielding would interfere with the diagnostic procedure or for computed radiographic examinations.
(f) Persons may not be exposed to the useful beam except for healing arts purposes and unless such exposure has been authorized by a licensed practitioner of the healing arts. Deliberate exposure for any of the following purposes is prohibited:
1. Exposure of a person for training, demonstration or other non−healing arts purpose.
2. Exposure of a person for healing arts screening, except as authorized by the department.
Note: The procedure for requesting permission to conduct screening x−ray examination is in Appendix M.
(g) When a patient or film must be provided with additional support during a radiation exposure, all of the following applies:
1. The human holder shall be instructed in personal radiation safety and protected as required by subd. 2. Written safety procedures are required.
2. In those cases where the patient must hold the film, any portion of the body other than the area of clinical interest struck by the useful beam shall be protected by not less than 0.5 millimeter lead equivalent material.
3. Each facility shall have leaded shielding garments and devices available in sufficient numbers to provide protection to all personnel who are involved with x−ray operations and who are otherwise not shielded.
4. Leaded shielding garments and devices shall be fluoroscopically or radiographically inspected at least every 2 years for defects and replaced if defective. If visual inspection reveals possible defects, radiographic inspections shall be performed.
5. If visual inspection reveals possible defects, radiographic or fluoroscopic inspections shall be performed.
Note: Leaded shielding garments and devices include aprons, gloves, vests, skirts, thyroid shields and gonadal shields.
(h) Procedures and auxiliary equipment designed to minimize patient and personnel exposure commensurate with the needed diagnostic information shall be utilized, as follows:
1. The speed of the screen and film combinations used shall be of a speed consistent with the diagnostic objective of the examinations. Film cassettes without intensifying screens may not be used for any routine diagnostic radiological imaging, with the exception of veterinary radiography and standard film packets for intra−oral use in dental radiography.
2. The radiation exposure to the patient shall be the minimum exposure required to produce images of good diagnostic quality.
3. An x−ray system may not be utilized in a procedure where the source to patient distance is less than 30 centimeters, except for a veterinary system, bone density unit or a unit granted an exemption by the US food and drug administration.
4. If grids are used between the patient and the image receptor to decrease scatter to the film and improve contrast, the grid shall meet all of the following requirements:
a. Be positioned with tube side facing the in right direction, and grid centered to the central ray.

Unofficial Text (See Printed Volume). Current through date and Register shown on Title Page.

b. Be of the proper focal distance for the SIDs being used. Grids shall be of the proper ratio to adequately reduce scatter for the procedure being performed.
c. Antiscatter grids or an appropriate air gap technique to reduce scatter to the image receptor shall be used for all x−ray examinations of the human torso utilizing stationary x−ray equipment for patients 12 years of age or older.
(i) All persons associated with the operation of an x−ray system are subject to the requirements of s. DHS 157.22 (1), (5), (7) and (8).
(j) A person proposing to conduct a healing arts screening program may not initiate a program without the department's prior approval. When requesting approval, the person shall submit the information outlined in Appendix M. If any information submitted to the department becomes invalid or outdated, the department shall be immediately notified.
(k) All facilities performing mammography shall meet the requirements of 21 CFR 900, US food and drug administration, Mammography Quality Standards Act.
(L) A registrant that uses two or more therapy devices for human use shall establish a radiation safety committee consisting of at least three members to oversee the use of all theraputic radiation machines. The committee shall include an operator authorized by the registrant, a representative of the institution's management, and the radiation safety officer. If the institution has a radiation safety committee established under s. DHS 157.61(1)(e), this committee may be designated to oversee the use of all theraputic radiation machines, if an operator authorized by the registrant is appointed to this committee.
(3) X−RAY ~~FILM~~ IMAGE PROCESSING EQUIPMENT AND PROCESSING PROCEDURES.
(a) *Film.* 1. Each installation using a radiographic x−ray system for human diagnosis or screening and using analog image receptors shall have available suitable equipment for handling and processing radiographic film according to the film and chemistry manufacturer's instructions.
~~(b)~~ 2. Quality control and maintenance procedures shall be performed on a regular schedule according to the device manufacturer's recommendations.
~~(c)~~ 3. X−ray film processing control tests shall be performed and analyzed on days when human patient films are being processed and prior to the processing of the first films of the day, except dental and podiatry facilities. If analysis shows that the image quality has declined, corrective action shall be taken prior to processing patient films.
~~(d)~~ 4. X−ray film processors in dental and podiatry facilities shall be tested at least once a week.
(b) *Digital Imaging Systems.* 1. Each installation using a digital radiographic x−ray system for human diagnosis or screening shall have available suitable equipment for handling and processing the radiographic digital image according to the manufacturer's instructions.
2. Quality control and maintenance procedures shall be performed on a regular schedule according to the device manufacturer's recommendations. If analysis shows that the image quality has declined, corrective action shall be taken prior to performing patient examinations.

(4) OTHER REQUIREMENTS. (a) Pass boxes, if provided, shall be constructed to exclude light from the darkroom when cassettes are placed in or removed from the boxes and shall incorporate adequate shielding from stray radiation to prevent exposure of undeveloped film.
(b) The darkroom shall be light tight with proper safelights so that any film type in use exposed in a cassette to x−radiation sufficient to produce an optical density from one to 2 when processed may not suffer an increase in density greater than 0.1, or 0.05 for mammography, when exposed in the darkroom for 2 minutes with all safelights on. This test shall be performed at least once every 6 months. If used, daylight film handling boxes shall preclude fogging of the film. Darkrooms typically used by more than one person shall be provided a method to prevent accidental entry while undeveloped films are being handled or processed.
(c) Film shall be stored according to the manufacturer's requirements and shall be protected from exposure to stray radiation. Film in open packages shall be stored in a light tight container.
(d) Film cassettes and intensifying screens shall be inspected periodically and shall be cleaned and replaced as necessary and consistent with the manufacturer's instructions to best assure radiographs of good diagnostic quality.
(e) Outdated x−ray film may not be used for diagnostic radiographs.

Unofficial Text (See Printed Volume). Current through date and Register shown on Title Page.

(f) Film developing solutions shall be prepared using instructions given by the manufacturer and maintained in strength by replenishment or renewal so that full development is accomplished within the time specified by the manufacturer.

History: CR 01−108: cr. Register July 2002 No. 559, eff. 8−1−02; **CR 06−021: am. (2) (b) (intro.), (g) 3., 4., (3) (c) and (4) (b), cr. (2) (d) 3. and (g) 5. Register October 2006 No. 610, eff. 11−1−06**.

DHS 157.75 General requirements for all diagnostic x−ray systems. Diagnostic x−ray systems shall meet all the following requirements:

(1) WARNING LABEL. The control panel containing the main power switch shall bear the following warning statement, legible and accessible to view: "WARNING: This x−ray unit may be dangerous to patient and operator unless safe exposure factors and operating instructions are observed."

(2) BATTERY CHARGE INDICATOR. On battery−powered x−ray generators, visual means shall be provided on the control panel to indicate whether the battery is in a state of charge adequate for proper operation.

(3) LEAKAGE RADIATION FROM THE DIAGNOSTIC SOURCE ASSEMBLY. The leakage radiation from the diagnostic source assembly measured at a distance of one meter in any direction from the source may not exceed one mGy (115 milliroentgens) in one hour when an x−ray tube is operated at its leakage technique factors. Compliance shall be determined by measurements averaged over an area of 100 square centimeters with no linear dimension greater than 20 centimeters. Leakage technique factors may be any of the following:

(a) For diagnostic source assemblies intended for capacitor energy storage equipment, the maximum−rated peak tube potential and the maximum−rated number of exposures in an hour for operation at the maximum−rated peak tube potential with the quantity of charge per exposure being 10 millicoulombs, which is 10 mAs, or the minimum obtainable from the unit, whichever is larger.

(b) For diagnostic source assemblies intended for field emission equipment rated for pulsed operation, the maximum−rated peak tube potential and the maximum−rated number of x−ray pulses in an hour for operation at the maximum−rated peak tube potential.

(c) For all other diagnostic source assemblies, the maximum−rated peak tube potential and the maximum−rated continuous tube current for the maximum−rated peak tube potential.

(4) RADIATION FROM COMPONENTS OTHER THAN THE DIAGNOSTIC SOURCE ASSEMBLY. The radiation emitted by a component other than the diagnostic source assembly may not exceed 20µGy (2.15 milliroentgens) in one hour at 5 centimeters from any accessible surface of the component when it is operated in an assembled x−ray system under any conditions for which it was designed. Compliance shall be determined by measurements averaged over an area of 100 square centimeters with no linear dimension greater than 20 centimeters.

(5) BEAM QUALITY.

(a) The half−value layer of the useful beam for a given x−ray tube potential may not be less than the values shown in Table DHS 157.75. If it is necessary to determine the half−value layer at an x−ray tube potential that is not listed in Table DHS 157.75, linear interpolation or extrapolation may be made.

TABLE DHS 157.75
HALF−VALUE LAYER REQUIREMENTS

		Half−Value Layer in mm Aluminum		
Design Operating Range	Measured Operating Potential (kVp)	Specified Dental Systems[1]	Specified Dental and Other Diagnostic X−Ray Systems[2]	Other Diagnostic X−Ray Systems [3]
Below 51	30	N/A	0.3	0.3
	40	N/A	0.4	0.4
	50	1.5	0.5	0.5
51 to 70	51	1.5	1.2	1.3
	60	1.5	1.3	1.5
	70	1.5	1.5	1.8

Unofficial Text (See Printed Volume). Current through date and Register shown on Title Page.

Above 70	71	2.1	2.1	2.4
	80	2.3	2.3	2.8
	90	2.5	2.5	3.2
	100	2.7	2.7	3.6
	110	3.0	3.0	4.1
	120	3.2	3.2	4.5
	130	3.5	3.5	5.0
	140	3.8	3.8	5.4
	150	4.1	4.1	5.9

1 Dental intraoral systems manufactured after December 1, 1980.
2 Dental intraoral systems manufactured on or before December 1, 1980 and all other diagnostic x−ray systems.
3 All x−ray systems, except dental x−ray systems designed for use with intraoral image receptors, subject to this section and manufactured as specified in federal x−ray equipment performance standards, 21 CFR 1020.

(b) For x−ray systems using capacitor discharge to provide power to an x−ray tube, half−value layer shall be determined with the system fully charged and a setting of 10 mAs for each exposure.
(c) The required minimal half−value layer of the useful beam shall include the filtration contributed by all materials that are permanently between the source and the patient.
(d) For x−ray systems with variable filtration controls, the system shall prevent an exposure unless the appropriate filtration is in place for the kilovolts peak selected.
(6) MULTIPLE TUBES. When 2 or more radiographic tubes are controlled by one exposure switch, the tube that has been selected shall be clearly indicated prior to initiation of the exposure. The indication shall be both on an x−ray control panel and at or near the selected tube housing assembly.
(7) MECHANICAL SUPPORT OF TUBE HEAD. The tube housing assembly supports shall be adjusted such that the tube housing assembly will remain stable during an exposure unless tube−housing movement is a designed function of an x−ray system.
(8) TECHNIQUE INDICATORS. (a) The technique factors to be used during an exposure shall be indicated before the exposure begins. If automatic exposure controls are used, the technique factors, which are set prior to the exposure, shall be indicated.
(b) The requirement in par. (a) may be met by permanent markings on equipment having fixed technique factors. Indication of technique factors shall be visible from the operator's position except in the case of spot films made by the fluoroscopist.
(9) MAINTAINING COMPLIANCE. Diagnostic x−ray systems and their associated components used on humans and certified under the federal x−ray equipment performance standard, 21 CFR 1020, shall be maintained in compliance with applicable requirements of that standard.
(10) LOCKS. All position locking, holding and centering devices on x−ray system components and systems shall function as intended.
History: CR 01−108: cr. Register July 2002 No. 559, eff. 8−1−02; **CR 06−021: am. Table Register October 2006 No. 610, eff. 11−1−06**.

DHS 157.76 Fluoroscopic equipment. Equipment for fluoroscopic imaging or for recording images from the fluoroscopic image receptor, except computed tomography x−ray systems manufactured on or after November 29, 1984, shall meet all the following requirements:
(1) LIMITATION OF USEFUL BEAM. (a) The fluoroscopic imaging assembly shall be provided with a primary protective barrier which intercepts the entire cross section of the useful beam at any source to image distance. The x−ray tube used for fluoroscopy shall not produce x−rays unless the barrier is in position to intercept the entire useful beam. The air kerma rate due to transmission through the barrier with the attenuation block in the useful beam combined with radiation from the fluoroscopic image receptor shall not exceed 3.34×10^{-3} percent of the entrance air kerma rate, at a distance of 10 cm from any accessible surface of the fluoroscopic imaging assembly beyond the plane of the image receptor. (b) Compliance shall be determined as follows:
1. The air kerma rate shall be measured as required under sub. (4). The air kerma rate due to transmission through the primary barrier combined with radiation from the fluoroscopic image receptor shall be determined by measurements averaged over an area of 100 square cm with no linear dimension greater than 20 cm.

Unofficial Text (See Printed Volume). Current through date and Register shown on Title Page.

2. If the source is below the tabletop, the measurement shall be made with the input surface of the fluoroscopic imaging assembly positioned 30 cm above the tabletop. If the source is above the tabletop and the source to image distance is variable, the measurement shall be made with the end of the beam−limiting device or spacer as close to the tabletop as it can be placed, provided that it shall not be closer than 30 cm.
3. Movable grids and compression devices shall be removed from the useful beam during the measurement.
4. For all measurements, the attenuation block shall be positioned in the useful beam 10 cm from the point of measurement of entrance air kerma rate and between this point and the input surface of the fluoroscopic imaging assembly.
(c) Radiation therapy simulation systems shall be exempt from this requirement provided the systems are intended only for remote control operation and the manufacturer sets forth instructions for assemblers with respect to control location as part of the information required in 21 CFR 1020.30 (g).
(2) FIELD LIMITATION. (a) For fluoroscopic equipment manufactured after February 25, 1978, when the angle between the image receptor and the beam axis of the x−ray beam is variable, means shall be provided to indicate when the axis of the x−ray beam is perpendicular to the plane of the image receptor. Compliance with par. (e) 1. and 2. shall be determined with the beam axis indicated to be perpendicular to the plane of the image receptor.
(b) Means shall be provided to permit further limitation of the x−ray field to sizes smaller than the limits of par. (e) 1. and 2. Beam limiting devices manufactured after May 22, 1979, and incorporated in equipment with a variable source to image distance and/or the capability of a visible area of greater than 300 square cm, shall be provided with means for stepless adjustment of the x−ray field. Equipment with a fixed source to image distance and the capability of a visible area of no greater than 300 square cm shall be provided with either stepless adjustment of the x−ray field or with a means to further limit the x−ray field size at the plane of the image receptor to 125 square cm or less. Stepless adjustment shall, at the greatest source to image distance, provide continuous field sizes from the maximum obtainable to a field size containable in a square of 5 cm by 5 cm. This paragraph does not apply to nonimage− intensified fluoroscopy.
(c) The x−ray field produced by non−image−intensified fluoroscopic equipment shall not extend beyond the entire visible area of the image receptor. Means shall be provided for stepless adjustment of field size. The minimum field size, at the greatest source to image distance, shall be containable in a square of 5 cm by 5 cm.
(d) For fluoroscopic equipment with inherently circular image receptors manufactured before June 10, 2006, other than radiation therapy simulation systems, all the following applies:
1. Neither the length nor the width of the x−ray field in the plane of the image receptor shall exceed that of the visible area of the image receptor by more than 3% of the source to image distance. The sum of the excess length and the excess width shall be no greater than 4% of the source to image distance.
2. For rectangular x−ray fields used with circular image receptors, the error in alignment shall be determined along the length and width dimensions of the x−ray field which pass through the center of the visible area of the image receptor.
(e) For fluoroscopic equipment manufactured on or after June 10, 2006, other than radiation therapy simulation systems, the maximum area of the x−ray field in the plane of the image receptor shall conform to one of the following requirements:
1. When any linear dimension of the visible area of the image receptor measured through the center of the visible area is less than or equal to 34 cm in any direction, at least 80% of the area of the x−ray field overlaps the visible area of the image receptor.
2. When any linear dimension of the visible area of the image receptor measured through the center of the visible area is greater than 34 cm in any direction, the x−ray field measured along the direction of greatest misalignment with the visible area of the image receptor does not extend beyond the edge of the visible area of the image receptor by more than 2 cm.
(f) For x−ray systems with inherently rectangular image receptors manufactured on or after June 10, 2006, all the following applies:
1. Neither the length nor the width of the x−ray field in the plane of the image receptor shall exceed that of the visible area of the image receptor by more than 3% of the source to image distance. The sum of the excess length and the excess width shall be no greater than 4% of the source to image distance.
2. The error in alignment shall be determined along the length and width dimensions of the x−ray field which pass through the center of the visible area of the image receptor.

Unofficial Text (See Printed Volume). Current through date and Register shown on Title Page.

(g) If the fluoroscopic x−ray field size is adjusted automatically as the source to image distance or image receptor size is changed, a capability may be provided for overriding the automatic adjustment in case of system failure. If it is so provided, a signal visible at the fluoroscopist's position shall indicate whenever the automatic field adjustment is overridden. Each such system failure override switch shall be clearly labeled as follows:

For X−ray Field Limitation System Failure

(3) ACTIVATION OF TUBE. X−ray production in the fluoroscopic mode shall be controlled by a device which requires continuous pressure by the operator for the entire time of any exposure. When recording serial radiographic images from the fluoroscopic image receptor, the operator shall be able to terminate the x−ray exposure at any time, but means may be provided to permit completion of any single exposure of the series in process.

(4) AIR KERMA RATES. (a) Fluoroscopic equipment manufactured before May 19, 1995 shall meet all the following requirements:

1. Equipment provided with automatic exposure rate control shall not be operable at any combination of tube potential and current that will result in an air kerma rate in excess of 88 mGy per minute (10 R/min) at the measurement point specified in par. (e), except as specified in par. (e) 6.
2. Equipment provided without automatic exposure rate control shall not be operable at any combination of tube potential and current that will result in an air kerma rate in excess of 44 mGy per minute (5 R/min) at the measurement point specified in par. (e), except as specified in par. (e) 6.
3. Equipment provided with both an automatic exposure rate control mode and a manual mode shall not be operable at any combination of tube potential and current that will result in an air kerma rate in excess of 88 mGy per minute (10 R/min) in either mode at the measurement point specified in par. (e), except as specified in par. (e) 6.
4. Equipment may be modified in accordance with 21 CFR 1020.30(q) to comply with par. (a). When the equipment is modified, it shall bear a label indicating the date of the modification and the statement:

Modified to comply with 21 CFR 1020.32 (h) (2).

(b) The requirements of par. (a) do not apply to all the following:

1. During recording of fluoroscopic images.
2. When a mode of operation has an optional high−level control, in which case that mode shall not be operable at any combination of tube potential and current that will result in an air kerma rate in excess of the rates specified in this subsection at the measurement point specified in par. (e), unless the high−level control is activated. Special means of activation of high−level controls shall be required. The high−level control shall be operable only when continuous manual activation is provided by the operator. A continuous signal audible to the fluoroscopist shall indicate that the high−level control is being employed.

(c) Fluoroscopic equipment manufactured on or after May 19, 1995 shall meet all the following requirements:

1. Equipped with automatic exposure rate control if operable at any combination of tube potential and current that results in an air kerma rate greater than 44 mGy per minute (5 R/min) at the measurement point specified in this subsection. Provision for manual selection of technique factors may be provided.
2. Not be operable at any combination of tube potential and current that will result in an air kerma rate in excess of 88 mGy per minute (10 R/min) at the measurement point specified in par. (e)

(d) The requirements of par. (c) do not apply to all the following:

1. For equipment manufactured prior to June 10, 2006, during the recording of images from a fluoroscopic image receptor using photographic film or a video camera when the x−ray source is operated in a pulsed mode.
2. For equipment manufactured on or after June 10, 2006, during the recording of images from the fluoroscopic image receptor for the purpose of providing the user with a recorded image after termination of exposure. Such recording does not include images resulting from a last image−hold feature that are not recorded.
3. When a mode of operation has an optional high−level control and the control is activated, in which case the equipment shall not be operable at any combination of tube potential and current that will result in an air kerma rate in excess of 176 mGy per minute (20 R/min) at the measurement point specified par. (e). Special means of activation of high−level controls shall be required. The high−level control shall be operable only when continuous manual activation is provided by the operator. A continuous signal audible to the fluoroscopist shall indicate that the high−level control is being employed.

Unofficial Text (See Printed Volume). Current through date and Register shown on Title Page.

(e) Compliance with par. (c) shall be determined as follows:
1. If the source is below the x−ray table, the air kerma rate shall be measured at 1 cm above the tabletop or cradle.
2. If the source is above the x−ray table, the air kerma rate shall be measured at 30 cm above the tabletop with the end of the beam−limiting device or spacer positioned as closely as possible to the point of measurement.
3. In a C−arm type of fluoroscope, the air kerma rate shall be measured at 30 cm from the input surface of the fluoroscopic imaging assembly, with the source positioned at any available source to image distance, provided that the end of the beam limiting device or spacer is no closer than 30 cm from the input surface of the fluoroscopic imaging assembly.
4. In a C−arm type of fluoroscope having an source to image distance less than 45 cm, the air kerma rate shall be measured at the minimum source to skin distance.
5. In a lateral type of fluoroscope, the air kerma rate shall be measured at a point 15 cm from the centerline of the x−ray table and in the direction of the x−ray source with the end of the beam limiting device or spacer positioned as closely as possible to the point of measurement. If the tabletop is movable, it shall be positioned as closely as possible to the lateral x−ray source, with the end of the beam−limiting device or spacer no closer than 15 cm to the centerline of the x−ray table.
6. Fluoroscopic radiation therapy simulation systems are exempt from this paragraph.
(5) INDICATION OF POTENTIAL AND CURRENT. During fluoroscopy and cinefluorography, x−ray tube potential and current shall be continuously indicated. Deviation of x−ray tube potential and current from the indicated values shall not exceed the maximum deviation as stated by the manufacturer in accordance with 21 CFR 1020.30 (h) (3).
(6) SOURCE TO SKIN DISTANCE. (a) Means shall be provided to limit the source to skin distance to not less than 38 cm on stationary fluoroscopes and to not less than 30 cm on mobile and portable fluoroscopes. In addition, for fluoroscopes intended for specific surgical application that would be prohibited at the source−skin distances specified in this paragraph, provisions may be made for operation at shorter source−skin distances but in no case less than 20 cm.
(b) For stationary, mobile, or portable C−arm fluoroscopic systems manufactured on or after June 10, 2006, having a maximum source−image receptor distance of less than 45 cm, means shall be provided to limit the source−skin distance to not less than 19 cm. Such systems shall be labeled for extremity use only. In addition, for those systems intended for specific surgical application that would be prohibited at the source−skin distances specified in this paragraph, provisions may be made for operation at shorter source−skin distances but in no case less than 10 cm.
(7) FLUOROSCOPIC IRRADIATION TIME, DISPLAY, AND SIGNAL. (a) Fluoroscopic equipment manufactured before June 10, 2006, shall be provided with means to preset the cumulative irradiation time of the fluoroscopic tube. The maximum cumulative time of the timing device shall not exceed 5 minutes without resetting. A signal audible to the fluoroscopist shall indicate the completion of any preset cumulative Irradiation time. Such signal shall continue to sound while x−rays are produced until the timing device is reset.
(b) As an alternative to the requirements of par. (a), radiation therapy simulation systems may be provided with a means to indicate the total cumulative exposure time during which x−rays were produced, and which is capable of being reset between x−ray examinations.
(c) For x−ray controls manufactured on or after June 10, 2006, all of the following shall be provided for each fluoroscopic tube:
1. A display of the fluoroscopic irradiation time at the fluoroscopist's working position.
2. The display required in subd. 1. shall function independently of the audible signal described in sub. (4) and meet all the following requirements:
a. When the x−ray tube is activated, the fluoroscopic irradiation time in minutes and tenths of minutes shall be continuously displayed and updated at least once every 6 seconds.
b. The fluoroscopic irradiation time shall also be displayed within 6 seconds of termination of an exposure and remain displayed until reset.
c. Means shall be provided to reset the display to zero prior to the beginning of a new examination or procedure.

Unofficial Text (See Printed Volume). Current through date and Register shown on Title Page.

d. A signal audible to the fluoroscopist shall sound for each passage of 5 minutes of fluoroscopic irradiation time during an examination or procedure. The signal shall sound until manually reset or, if automatically reset, for at least 2 seconds.

(8) MOBILE AND PORTABLE FLUOROSCOPES. Mobile and portable fluoroscopes shall incorporate an image intensifier.

(9) DISPLAY OF LAST−IMAGE−HOLD. (a) Fluoroscopic equipment manufactured on or after June 10, 2006, shall be equipped with means to display the last image following termination of the fluoroscopic exposure.

(b) For an LIH obtained by retaining pre−termination fluoroscopic images, if the number of images and method of combining images are selectable by the user, the selection shall be indicated prior to initiation of the fluoroscopic exposure.

(c) For an LIH image obtained by initiating a separate radiographic−like exposure at the termination of fluoroscopic imaging, the technique factors for the LIH image shall be selectable prior to the fluoroscopic exposure, and the combination selected shall be indicated prior to initiation of the fluoroscopic exposure.

(d) Means shall be provided to clearly indicate to the user whether a displayed image is the LIH radiograph or fluoroscopy. Display of the LIH radiograph shall be replaced by the fluoroscopic image concurrently with re−initiation of fluoroscopic exposure, unless separate displays are provided for the LIH radiograph and fluoroscopic images.

(e) The predetermined or selectable options for producing the LIH radiograph shall be described in the information required by 21 CFR 1020.30 (h). The information shall include a description of any technique factors applicable for the selected option and the impact of the selectable options on image characteristics and the magnitude of radiation emissions.

(10) DISPLAYS OF VALUES OF AIR KERMA RATE AND CUMULATIVE AIR KERMA. Fluoroscopic equipment manufactured on or after June 10, 2006, shall display at the fluoroscopist's working position the air kerma rate and cumulative air kerma. Each x−ray tube used during an examination or procedure shall meet all the following requirements:

(a) When the x−ray tube is activated and the number of images produced per unit time is greater than 6 images per second, the air kerma rate in mGy/min shall be continuously displayed and updated at least once every second.

(b) The cumulative air kerma in units of mGy shall be displayed either within 5 seconds of termination of an exposure or displayed continuously and updated at least once every 5 seconds.

(c) The display of the air kerma rate shall be clearly distinguishable from the display of the cumulative air kerma.

(d) 1. The air kerma rate and cumulative air kerma shall represent the value for conditions of free−in−air irradiation at one of the referenced locations.

2. For fluoroscopes with x−ray source below the x−ray table, x−ray source above the table, or of lateral type, the reference locations shall be the respective locations specified in sub. (4) for measuring compliance with air kerma rate limits.

3. For C−arm fluoroscopes, the reference location shall be 15 cm from the isocenter toward the x−ray source along the beam axis. Alternatively, the reference location shall be at a point specified by the manufacturer to represent the location of the intersection of the x−ray beam with the patient's skin.

Note: The reference location is identified and described specifically in the information provided to users according to 21 CFR 1020.30 (h) (6) (iii).

(e) Means shall be provided to reset to zero the display of cumulative air kerma prior to the commencement of a new examination or procedure.

(f) The displayed air kerma rate and cumulative air kerma shall not deviate from the actual values by more than ±35 percent over the range of 6 mGy/min and 100 mGy to the maximum indication of air kerma rate and cumulative air kerma, respectively. Compliance shall be determined with an irradiation time greater than 3 seconds.

(11) EQUIPMENT OPERATIONS. (a) The facility shall ensure that only a licensed practitioner or a radiologic technologist who is trained in the safe use of fluoroscopic x-ray systems shall be allowed to operate these systems. All fluoroscopic x-ray images shall be viewed, directly or indirectly, and interpreted by a licensed practitioner.

(b). The use of fluoroscopic x-ray systems by radiologic technologists shall be performed under the supervision of a licensed practitioner for the purpose of localization to obtain images for diagnostic purposes.

Unofficial Text (See Printed Volume). Current through date and Register shown on Title Page.

(c) Radiologic technology students may not operate fluoroscopic x-ray systems except under the direct supervision of a licensed practitioner or radiologic technologist.
(d) Fluoroscopic x-ray systems may not be used as a positioning tool for general purpose radiographic examinations.
(e) The registrant shall require the operator of a fluoroscopic x-ray system to meet either of the following requirements:
1. Is certified by the American Board of Radiology or board eligible.
2. Has completed training to include but not limited to the following:
a. Principles and operation of the fluoroscopic x-ray system.
b. Biological effects of x-ray.
c. Principles of radiation protection.
d. Fluoroscopic outputs.
e. High level control options.
f. Dose reduction techniques for fluoroscopic x-ray systems.
g. Applicable state and federal regulations.

(12) AIR KERMA MEASUREMENTS. (a) Annual measurements of both typical and maximum air kerma shall be made by a medical physicist or a person approved by a medical physicist.
Note: Materials should be placed in the useful beam to protect the imaging system when conducting these periodic measurements. Air kerma measurements do not include backscatter.

History: CR 01−108: cr. Register July 2002 No. 559, eff. 8−1−02; **CR 06−021: r. and recr. Register October 2006 No. 610, eff. 11−1−06.**

DHS 157.77 General purpose radiographic systems. (1) BEAM LIMITATION. (a) *Collimation.* The useful beam shall be limited to the area of clinical interest. This requirement is met if a positive beam−limiting device meeting manufacturer's specifications has been properly used or if evidence of collimation is shown on at least 3 sides or 3 corners of the film. Mammography systems are exempt from the collimation requirement.
(b) *General purpose stationary and mobile x−ray systems.* General purpose stationary and mobile x−ray systems, including veterinary systems other than portable, shall meet both of the following requirements:
1. Only x−ray systems provided with means for independent stepless adjustment of at least 2 dimensions of the x−ray field may be used.
2. A method shall be provided for visually defining the perimeter of the x−ray field. The total misalignment of the edges of the visually defined field with the respective edges of the x−ray field along either the length or width of the visually defined field may not exceed 2% of the distance from the source to the center of the visually defined field when the surface upon which it appears is perpendicular to the axis of the x−ray beam.
(c) *Stationary general purpose x−ray systems.* Stationary general purpose x−ray systems, both certified and non−certified, shall meet all the following requirements:
1. A method shall be provided to indicate when the axis of the x−ray beam is perpendicular to the plane of the image receptor, to align the center of the x−ray field with respect to the center of the image receptor to within 2% of the SID and to indicate the SID to within 2%.
2. The beam−limiting device shall indicate numerically the field size in the plane of the image receptor to which it is adjusted.
3. Field size dimensions and SIDs shall be specified in inches or centimeters and shall ensure that aperture adjustments result in x−ray field dimensions in the plane of the image receptor that correspond to those indicated by the beam−limiting device to within 2% of the SID when the beam axis is indicated to be perpendicular to the plane of the image receptor.
(d) *X−ray systems designed for one image receptor size.* Radiographic equipment designed for only one image receptor size at a fixed SID shall be provided with means to limit the field at the plane of the image receptor to dimensions no greater than those of the image receptor, and to align the center of the x−ray field with the center of the image receptor to within 2% of the SID, or shall be provided with means to both size and align the x−ray field such that the x−ray field at the plane of the image receptor does not extend beyond any edge of the image receptor.

Unofficial Text (See Printed Volume). Current through date and Register shown on Title Page.

(e) *Miscellaneous and veterinary x−ray systems.* X−ray systems other than those described in pars. (a) to (c), veterinary systems installed prior to the effective date of August 1, 2002, and all portable veterinary x−ray systems shall meet all of the following requirements:
1. Means shall be provided to limit the x−ray field in the plane of the image receptor so that such field does not exceed each dimension of the image receptor by more than 2% of the SID when the axis of the x−ray beam is perpendicular to the plane of the image receptor.
2. Means shall be provided to align the center of the x−ray field with the center of the image receptor to within 2% of the SID, or means shall be provided to both size and align the x−ray field such that the x−ray field at the plane of the image receptor does not extend beyond any edge of the image receptor. Compliance shall be determined with the axis of the x−ray beam perpendicular to the plane of the image receptor.
3. The requirements in subds. 1. and 2. may be met with a collimator system that meets the requirements for a general purpose x−ray system or, when alignment means are also provided, may be met with either of the following:
a. An assortment of removable, fixed−aperture, beam−limiting devices sufficient to meet the requirement for each combination of image receptor size and SID for which the unit is designed with each such device having clear and permanent markings to indicate the image receptor size and SID for which it is designed.
b. A beam−limiting device with multiple fixed apertures sufficient to meet the requirement for each combination of image receptor size and SID for which the unit is designed. Permanent, clearly legible markings shall indicate the image receptor size and SID that each aperture is designed for and shall indicate which aperture is in position for use.
(2) RADIATION EXPOSURE CONTROL. (a) *Exposure initiation.* Means shall be provided to initiate the radiation exposure by a deliberate action on the part of the operator, such as the depression of a switch. Radiation exposure may not be initiated without such an action. In addition, exposure may not be initiated when the timer is set to a "zero" or "off" position if either position is provided.
(b) *Exposure indication.* Means shall be provided for visual indication observable at or from the operator's protected position whenever x−rays are produced. In addition, a signal audible to the operator shall indicate that the exposure has terminated.
(c) *Exposure termination.* Means shall be provided to terminate the exposure at a preset time interval, preset product of current and time, a preset number of pulses or a preset radiation exposure to the image receptor. Except for dental panoramic systems, termination of an exposure shall cause automatic resetting of the timer to its initial setting or to "zero."
(d) *Manual exposure control.* An x−ray control shall be incorporated into each x−ray system so that the operator may terminate an exposure at any time except for any one of the following:
1. Exposure of 0.5 second or less.
2. During serial radiography when means shall be provided to permit completion of any single exposure of the series in process.
(e) *Automatic exposure controls.* When an automatic exposure control is provided, it shall meet all the following requirements:
1. Indication shall be made on the control panel when this mode of operation is selected.
2. If the x−ray tube potential is equal to or greater than 50 kVp, the minimum exposure time for field emission equipment rated for pulsed operation shall be equal to or less than a time interval equivalent to 2 pulses.
3. The minimum exposure time for all equipment other than field emission equipment shall be equal to or less than one−sixtieth second or a time interval required to deliver 5 mAs, whichever is greater.
4. Either the product of peak x−ray tube potential, current, and exposure time shall be limited to not more than 60 kWs per exposure, or the product of x−ray tube current and exposure time shall be limited to not more than 600 mAs per exposure except that, when the x−ray tube potential is less than 50 kVp, the product of x−ray tube current and exposure time shall be limited to not more than 2000 mAs per exposure.
5. A visible signal shall indicate when an exposure has been terminated and manual resetting shall be required before further automatically timed exposures may be made.
(f) *Exposure duration linearity.* For systems having independent selection of exposure time settings, the average ratios of exposure to the indicated timer setting, in units of .001mGy/s (mR/s), obtained at any 2 clinically used timer settings may not differ by more than 0.10 times their sum as expressed as:

$$(X_1 - X_2) \leq 0.1\ (X_1 + X_2)$$

where X_1 and X_2 are the average .001 mGy/s (mR/s).

Unofficial Text (See Printed Volume). Current through date and Register shown on Title Page.

(g) *Exposure control location.* The x−ray exposure control shall be placed so that the operator may view the patient while making any exposure and at least ~~3 feet~~ 1 meter (3.3 feet) from the end of the protective barrier.
(h) *Operator protection, except veterinary systems.* X−ray systems, excluding veterinary systems, shall meet all the following requirements to protect the operator during system use, as applicable:
1. Stationary x−ray systems shall be required to have the x−ray control permanently mounted in a protected area so that the operator is required to remain in that protected area during the entire exposure.
2. Mobile and portable x−ray systems used continuously for greater than one week in the same location shall meet the requirements of stationary systems.
3. Mobile and portable x−ray systems used for less than one week at the same location shall be provided with either a protective barrier at least 2 meters (6.5 feet) high for operator protection during exposures or a means to allow the operator to be at least 2 meters (6.5 feet) from the tube housing assembly during the exposure.
(i) *Operator protection for veterinary systems.* All stationary, mobile or portable x−ray systems used for veterinary work shall be provided with either a 2 meter (6.5 feet) high protective barrier for operator protection during exposures or a means to allow the operator to be at least 2 meters (6.5 feet) from the tube housing assembly during exposures. Persons restraining the animal during radiography shall be protected with at least 0.5mm lead aprons and full coverage gloves or full coverage mittens containing not less than 0.5mm lead equivalent material. The exposure control may be foot operated.
(3) SOURCE−TO−SKIN DISTANCE. All mobile or portable radiographic systems shall be provided with means to limit the source−to−skin distance to equal to or greater than 30 centimeters, except for veterinary systems.
(4) AIR KERMA REPRODUCIBILITY. When all technique factors are held constant, including control panel selections associated with automatic exposure control systems, the coefficient of variation of air kerma for both manual and automatic exposure control systems may not exceed 0.05. This requirement applies to clinically used techniques.
(5) RADIATION FROM CAPACITOR ENERGY STORAGE EQUIPMENT IN STANDBY STATUS. Radiation emitted from the x−ray tube when the system is fully charged and the exposure switch or timer is not activated may not exceed any of the following:
(a) A rate of 0.26mGy (0.03mR exposure) in one minute at 5 centimeters from any accessible surface of the diagnostic source assembly with the beam−limiting device fully open.
(b) An air kerma of 0.88 mGy (100mr/exposure) in one hour at 100 centimeters from the x−ray source, with the beam−limiting device fully open, when the system is discharged through the x−ray tube either manually or automatically by use of a discharge switch or deactivation of the input power. Compliance shall be determined by measurements of the maximum air kerma per discharge multiplied by the total number of discharges in one hour (duty cycle). The measurements shall be averaged over an area of 100 square centimeters with no linear dimension greater than 20 centimeters.
(6) ACCURACY. Deviation of measured technique factors from indicated values of kVp and exposure time may not exceed the limits specified for that system by its manufacturer. In the absence of manufacturer's specifications, the deviation may not exceed 10% of the indicated value for kVp and 10% of the time limit.
(7) mA/mAS LINEARITY. X−ray equipment that is operated on a power supply as specified by the manufacturer for any fixed x−ray tube potential within the range of 40% to 100% of the maximum rated shall meet all the following requirements:
(a) *Equipment having independent selection of x−ray tube current (mA).* The average ratios of exposure to the indicated milliampere− seconds product obtained at any 2 consecutive tube current settings may not differ by more than 0.10 times their sum:

$$X_1 - X_2 \leq 0.10\ (X_1 + X_2)$$

where X_1 and X_2 are the average values obtained at any of 2 consecutive tube current settings or at 2 settings differing by no more than a factor of 2 where the tube current selection is continuous.
(b) *Equipment having a combined x−ray tube current−exposure time product selector, but not a separate tube current selector.* The average ratios of exposure to the indicated milliampere−seconds product, in units of .001 mGy/mAs (mR/mAs), obtained at any 2 consecutive mAs selector settings may not differ by more than 0.10 times their sum:

$$X_1 - X_2 \leq 0.10\ (X_1 + X_2)$$

Unofficial Text (See Printed Volume). Current through date and Register shown on Title Page.

where X_1 and X_2 are the average values obtained at any 2 consecutive mAs selector settings, or at 2 settings differing by no more than a factor of 2 where the mAs selector provides continuous selection.
(c) *Measuring compliance.* Determination of compliance shall be based on 10 exposures taken within a time period of one hour at each of the 2 settings. These 2 settings may include any 2 focal spot sizes except where one is equal to or less than 0.45 millimeters and the other is greater than 0.45 millimeters. For purposes of this requirement, focal spot size is the nominal focal spot size specified by an x−ray tube manufacturer.
(8) ADDITIONAL REQUIREMENTS APPLICABLE TO CERTIFIED SYSTEMS ONLY. A diagnostic x−ray system incorporating one or more certified components shall meet all of the following additional requirements that relate to that certified component or components:
(a) *Beam limitation for stationary and mobile general purpose x−ray systems.* Stationary and mobile general purpose x−ray systems shall meet all the following beam limitation requirements:
1. There shall be provided a means of stepless adjustment of the size of the x−ray field. The minimum field size at a SID of 100 centimeters shall be equal to or less than 5 centimeters by 5 centimeters.
2. When a light localizer type of collimator is used to define the x−ray field, it shall provide an average illumination of not less than 160 lux or 15 footcandles at 100 centimeters or at the maximum SID, whichever is less. The average illumination shall be based upon measurements made in the approximate center of each quadrant of the light field. Radiation therapy simulation systems manufactured on and after May 27, 1980, are exempt from this requirement.
3. The edge of the light field at 100 centimeters or at the maximum SID, whichever is less, shall have a contrast ratio, corrected for ambient lighting, of not less than 4 in the case of beam−limiting devices designed for use on stationary equipment, and a contrast ratio of not less than 3 in the case of beam−limiting devices designed for use on mobile equipment. The contrast ratio is defined as I_1/I_2 where I_1 is the illumination 3 millimeters from the edge of the light field toward the center of the field; and I_2 is the illumination 3 millimeters from the edge of the light field away from the center of the field. Compliance shall be determined with a measuring instrument aperture of one millimeter in diameter.
(b) *Beam limitation and alignment on stationary general purpose x−ray systems equipped with PBL.* If PBL is being used, the x−ray system shall meet all of the following requirements:
1. PBL shall prevent the production of x−rays when either one of the following occurs:
a. The length or width of the x−ray field in the plane of the image receptor differs, except as permitted by manual override, from the corresponding image receptor dimensions by more than 3% of the SID.
b. The sum of the length and width differences, without regard to positive or negative mathematical sign, exceeds 4% of the SID.
2. Compliance for exposure lock−out shall be determined when the equipment indicates that the beam axis is perpendicular to the plane of the image receptor. Compliance shall be determined no more than 5 seconds after insertion of the image receptor.
3. The PBL system shall be capable of operation, at the discretion of the operator, such that the size of the field may be made smaller than the size of the image receptor through adjustment of the field size. The minimum field size at a SID of 100 centimeters shall be equal to or less than 5 centimeters by 5 centimeters.
4. The PBL system shall be designed such that a change in image receptor causes the automatic return to PBL.
(c) *Beam limitation for portable x−ray systems.* Beam limitation for portable x−ray systems shall meet the beam limitation requirements for manual collimators.
(9) TUBE STANDS FOR PORTABLE X−RAY SYSTEMS. A tube stand or other mechanical support shall be used for portable x−ray systems so that the x−ray tube housing assembly need not be hand−held during exposures.
History: CR 01−108: cr. Register July 2002 No. 559, eff. 8−1−02; **CR 06−021: r. and recr. (5) Register October 2006 No. 610, eff. 11−1−06**.

DHS 157.78 Intraoral dental radiographic systems. (1) GENERAL. In addition to the provisions of ss. DHS 157.74 and 157.75, the requirements in this section apply to x−ray equipment and associated facilities used for dental radiography. Requirements for extraoral dental radiographic systems are contained in s. DHS 157.77.
(2) SOURCE−TO−SKIN DISTANCE. X−ray systems designed for use with an intraoral image receptor shall be provided with means to limit source−to−skin distance to not less than either one of the following:

Unofficial Text (See Printed Volume). Current through date and Register shown on Title Page.

(a) 20 centimeters (8 inches) if operable above 50 kVp. Beam− limiting devices shall be lead lined.
(b) 10 centimeters (4 inches) if operable at 50 kVp only. Beam−limiting devices shall be lead lined.
(3) BEAM LIMITATION. Radiographic systems designed for use with an intraoral image receptor shall be provided with means to limit the x−ray beam such that the beam at the minimum SSD shall be contained in a circle having a diameter of no more than 7 centimeters.
(4) RADIATION EXPOSURE CONTROL. Intraoral radiographic systems shall meet all of the following exposure control requirements:
(a) *Exposure initiation.* Means shall be provided to initiate the radiation exposure by a deliberate action on the part of the operator, such as the depression of a switch. Radiation exposure may not be initiated without such an action. An exposure may not be made when the timer is set to a "zero" or "off" position if either position is provided.
(b) *Exposure indication.* Means shall be provided for visual exposure indication observable at or from the operator's protected position whenever x−rays are produced. In addition, a signal audible to the operator shall indicate that the exposure has terminated.
(c) *Exposure termination.* Means shall be provided to terminate the exposure at a preset time interval, preset product of current and time, a preset number of pulses or a preset radiation exposure to the image receptor. Termination of an exposure shall cause automatic resetting of the timer to its initial setting or to "zero" except for panoramic systems that may pause during the exposure cycle.
(d) *Exposure control location and operator protection.* An x−ray system shall meet all the following requirements, as applicable, to ensure operator protection during use of the system:
1. A stationary x−ray system shall have an x−ray exposure control that may be moved to a protected area so that the operator is required to remain in that protected area during the entire exposure. The exposure cord shall be of sufficient length to allow the operator to be at least 2 meters (6.5 feet) from the x−ray tube head and not in the direction the tube is pointed. The operator shall be able to determine when the exposure has completed either by audible tone or by visible signal.
2. A mobile or portable x−ray system that is used for greater than one week in the same location, which is a room or suite, shall meet the requirements of stationary dental equipment.
3. A mobile or portable x−ray system that is used for less than one week in the same location shall be provided with either a protective barrier at least 2 meters (6.5 feet) high for operator protection or means to allow the operator to be at least 2 meters (6.5 feet) from the tube housing assembly while making exposures.
(5) REPRODUCIBILITY. When the equipment is operated on an adequate power supply as specified by the manufacturer, the estimated coefficient of variation of air kerma may be no greater than 0.05 for any specific combination of selected technique factors.
(6) mA/mAS LINEARITY. X−ray equipment that is operated on a power supply as specified by the manufacturer for any fixed x−ray tube potential within the range of 40% to 100% of the maximum rated shall meet all of the following requirements:
(a) *Equipment having independent selection of x−ray tube current.* The average ratios of air kerma to the indicated milliampere−seconds product, in units of .001 mGy/mAs (mR/mAs), obtained at any 2 consecutive tube current settings may not differ by more than 0.10 times their sum:

$$X_1 - X_2 \leq 0.10\ (X_1+X_2)$$

where X_1 and X_2 are the average values obtained at each of 2 consecutive tube current settings, or at 2 settings differing by no more than a factor of 2 where the tube current selection is continuous.
(b) *Equipment having a combined x−ray tube current−exposure time product selector but not a separate tube current selector.*
The average ratios of air kerma to the indicated milliampere−seconds product, in units of .001 mGy/mAs (mR/mAs), obtained at any 2 consecutive mAs selector settings may not differ by more than 0.10 times their sum:

$$X_1 - X_2 \leq 0.10\ (X_1 +X_2)$$

where X_1 and X_2 are the average values obtained at any 2 consecutive mAs selector settings, or at 2 settings differing by no more than a factor of 2 where the mAs selector provides continuous selection.
(c) *Measuring compliance.* Determination of compliance shall be based on 10 exposures taken within a time period of one hour at each of the 2 settings. The 2 settings may include any 2 focal spot sizes except where one is equal to or less than 0.45 millimeters and the other is greater than 0.45 millimeters. For

Unofficial Text (See Printed Volume). Current through date and Register shown on Title Page.

purposes of this requirement, focal spot size is the nominal focal spot size specified by an x−ray tube manufacturer.
(7) ACCURACY. Deviation of technique factors from indicated values for kVp and exposure time, if time is independently selectable, may not exceed the limits specified for that system by its manufacturer. In the absence of manufacturer's specifications the deviation may not exceed 10% of the indicated value for kVp and 10% for time.
(8) KVP LIMITATIONS. Dental x−ray machines with a nominal fixed kVp of less than 50 kVp may not be used to make diagnostic dental radiographs of humans.
(9) ADMINISTRATIVE CONTROLS.
(a) Intraoral film holding devices shall be used.
(b) The tube housing and the cone may not be hand−held during an exposure.
(c) The tube shall be stationary during exposure, except for panoramic systems. Any oscillation of the tube head shall cease before exposure is made.
History: CR 01−108: cr. Register July 2002 No. 559, eff. 8−1−02. **DHS 157.79 Veterinary medicine x−ray systems.**

DHS 157.79 Veterinary medicine x-ray systems. (1) GENERAL. The requirements of this section apply to all animal use x−ray systems used in veterinary practice and are in addition to other provisions in subchs. I and III.
(2) EQUIPMENT. (a) The tube housing shall be electrically shock proof and of a diagnostic type. The x−ray tube may not be hand−held during exposures.
(b) A device shall be provided to terminate the exposure after a preset time or exposure.
(c) A ~~deadman~~ dead−man type of exposure switch shall be provided with an electrical cord of sufficient length so that the operator or the assistant, may stand out of the useful beam and at least 2 meters (6.5 feet) from the table during all x−ray exposures. A foot operated exposure switch may be used and this switch may be integrated
into the table base or the foot switch may be on a 2 meter (6.5 feet) cord.
(3) OPERATING PROCEDURES. (a) The operator shall stand at least 2 meters (6.5 feet) from the tube housing and the animal during radiographic exposures. The operator may not stand in the useful beam. Hand−held fluoroscopic screens may not be used. The tube housing may not be held by the operator. No person other than the operator may be in an x−ray room while exposures are being made unless another person's assistance is required.
(b) During any application in which the operator is not located behind a protective barrier, the operator and any other persons in the room during exposures shall wear protective clothing consisting of a protective apron having a lead equivalent of not less than 0.5 millimeter unless measurements indicate otherwise. (c) Any person holding or supporting an animal or the film during radiation exposure shall wear protective gloves that surround the hand and a protective apron having a lead equivalent of not less than 0.5 millimeter. Devices that only partially shield the hands are prohibited.
(d) Veterinary fluoroscopy systems shall be operated only under the direct supervision of the licensed veterinarian.
(4) ANIMAL SUPPORT. Mechanical restraints shall be used to restrict movement of the animal unless the restraints interfere with the examination of the animal. No persons may be regularly utilized to hold or support animals during radiation exposures. Operating personnel may not perform this service except in cases where no other person is available.
History: CR 01−108: cr. Register July 2002 No. 559, eff. 8−1−02; **CR 06−021: am. (2) (c) Register October 2006 No. 610, eff. 11−1−06.**

DHS 157.80 Computed tomography x−ray systems. (1) EQUIPMENT REQUIREMENTS. A computed tomography (CT) x−ray system shall meet all of the following requirements, as applicable:
(a) *Termination of exposure.*1. Means shall be provided to terminate the x−ray exposure automatically by either de−energizing the x−ray source or shuttering the x−ray beam in the event of equipment failure affecting data collection. The termination shall occur within an interval that limits the total scan time to no more than 110% of its preset value through the use of either a back−up timer or devices which monitor equipment function. A visible signal shall indicate when the x−ray exposure has been terminated. The operator shall be able to terminate the x−ray exposure at any time during a scan, or series of scans under CT x−ray system control, of greater than one−half second duration.
2. For systems that allow high voltage to be applied to the x−ray tube continuously and that control the emission of x−ray with a shutter, the radiation emitted may not exceed 0.88 mGy (100mR) in 1 hour at any

Unofficial Text (See Printed Volume). Current through date and Register shown on Title Page.

point 5 centimeters outside the external surface of the housing of the scanning mechanism when the shutter is closed.
3. Compliance shall be determined by measurements averaged over an area of 100 square centimeters with no linear dimension greater than 20 centimeters.
(b) *Tomographic plane indication and alignment.* A computed tomography x−ray system shall meet all of the following plane indication and alignment requirements, as applicable:
1. A single tomogram system shall allow for visual determination of the tomographic plane or a reference plane offset from the tomographic plane.
2. A multiple tomogram system shall allow for visual determination of the location of a reference plane.
Note: The reference plane may be offset from the location of the tomographic planes.
3. If a device using a light source is used to satisfy the requirements in subd. 2., the light source shall provide illumination levels sufficient to permit visual determination of the location of the tomographic plane or reference plane under ambient light conditions of up to 500 lux.
(c) *Beam−on and shutter status indicators and control switches.*
1. The CT x−ray control and gantry shall provide visual indication whenever x−rays are produced and, if applicable, whether the shutter is open or closed. Each emergency button or switch shall be clearly labeled as to its function.
2. For systems that allow high voltage to be applied to the x−ray tube continuously and that control the emission of x−ray with a shutter, the radiation emitted may not exceed 0.88 mGy (100 mRem) in one hour at any point 5 cm outside the external surface of the housing of the scanning mechanism when the shutter is closed.
3. Compliance shall be determined by measurements averaged over an area of 100 square cm with no linear dimension greater than 20 cm.
(d) *Indication of CT conditions of operation.* A CT x−ray system shall be designed such that the CT conditions of operation to be used during a scan or a scan sequence shall be indicated prior to the initiation of the scan or a scan sequence. On equipment having all or some of these conditions of operation at fixed values, this requirement may be met by permanent markings. Indication of CT conditions of operation shall be visible from any position from which scan initiation is possible.
(e) *Maximum surface CTDI100 identification.* The angular position where the maximum surface CTDI100 occurs shall be identified to allow for reproducible positioning of a CT dosimetry phantom.
(f) *CT x−ray systems containing a gantry manufactured after September 3, 1985.* A computed tomography x−ray system containing a gantry that was manufactured after September 3, 1985, shall meet all the following requirements:
1. The total error in the indicated location of the tomographic plane or reference plane may not exceed 5 millimeters.
2. If the x−ray production period is less than one−half second, the indication of x−ray production shall be actuated for at least one−half second. Indicators at or near the gantry shall be discernible from any point external to the patient opening where insertion of any part of the human body into the primary beam is possible.
3. The deviation of indicated scan increment versus actual increment may not exceed plus or minus one millimeter with any mass from 0 to 100 kilograms resting on the support device. The patient support device shall be incremented from a typical starting position to the maximum incremented distance or 30 centimeters, whichever is less, and then returned to the starting position. Measurement of actual versus indicated scan increment may be taken anywhere along this patient support device movement distance. 4. Premature termination of the x−ray exposure by the operator shall necessitate resetting of the CT conditions of operation prior to the initiation of another scan.
(2) OPERATING PROCEDURES. (a) 1. A CT x−ray system for human use may only be operated for diagnostic procedures by an American registry of radiologic technologists certified person who has been specifically trained in its operation.
2. A CT x-ray system for veterinary use may only be operated for diagnostic procedures by a person certified by the American registry of radiological technologists or who has completed training equivalent to the requirements of Appendix L and has been specifically trained in its operation.
3. Combination systems which are designated as PET/CT shall be operated by a person qualified by training in the safe use of radioactive materials and who meets the training requirements of Appendix L.

Unofficial Text (See Printed Volume). Current through date and Register shown on Title Page.

(b) Information shall be available at the control panel regarding the operation and calibration of the system. The information shall include all of the following components:
1. Dates of the latest calibration and spot checks and the location within the facility where the results of those tests may be obtained.
2. Instructions on the use of the CT dosimetry phantom including a schedule of spot checks appropriate for the system, allowable variations for the indicated parameters and the results of at least the most recent spot checks conducted on the system.
3. The distance in millimeters between the tomographic plane and the reference plane if a reference plane is utilized.
4. A current technique chart available at the control panel, which specifies for each routine examination the CT conditions of operation and the number of scans per examination including body part size and correct kV/mA for that body part. The technique chart shall be used to adjust techniques based on the body part being examined.
(c) Calibration and spot check measurements shall be made at a frequency recommended by the manufacturer. If the calibration or spot check of the CT x−ray system identifies that a system operating parameter has exceeded a tolerance established by the medical physicist, use of the CT x−ray system on patients shall be limited to those uses permitted by established written instructions of the medical physicist.
(d) A facility shall follow the manufacturer's daily start up routines and preventative maintenance schedules for a specific computedtomography x−ray system.
History: CR 01−108: cr. Register July 2002 No. 559, eff. 8−1−02; **CR 06−021: renum. (1) (a) and (c) to be (1) (a) 1. and (c) 1., cr. (1) (a) 2. and 3. and (c) 2. and 3., am. (2) (a) Register October 2006 No. 610, eff. 11−1−06**.

DHS 157.81 Shielding plan review. (1) PLAN REVIEW AND APPROVAL. Prior to construction, the floor plans, shielding specifications and equipment arrangement of all new installations, or modifications of existing installations, utilizing ionizing radiation machines, including dental CT and dental cephalometric machines, shall be submitted to the department for review and approval.
Note: Plans may be mailed to the department at: Department of Health and Family Services, Radiation Protection Section, P.O. Box 2659, Madison WI 53701−2659 or package delivery to: Department of Health and Family Services, Radiation Protection Section, Room 150, 1 West Wilson St, Madison WI 53702−0007.
(2) EXEMPTIONS. Dental intraoral and panoramic, mammography, and bone density devices are exempt from this section.
(3) PLAN SUBMITTAL REQUIREMENTS. (a) A shielding plan for a facility with two or more x−ray rooms shall include a medical physicist or person approved by a medical physicist recommendation for shielding.
(b) A shielding plan submitted for department review shall include all of the following:
1. The maximum rated technique factors of each machine.
2. A scale drawing of the room in which a stationary radiation machine system is located with such drawing indicating the use of areas adjacent to the room and an estimation of the extent of occupancy by a person in such areas. In addition, the drawing shall include all of the following:
a. The type and thickness of materials, or lead equivalency, of each protective barrier.
b. The use and occupancy of the areas surrounding an x−ray room, including occupied areas above or below an x−ray room.
c. The construction materials used for the floor and ceiling, if appropriate.
(c) . The operator booth described in the shielding plan shall be designed to meet all the following requirements:
1. The view area of the window shall be at least 0.09 m2 (144 square inches).
2. The window shall be placed so that the edge of the view window is at least 0.45 meters (18 inches) from the end of the barrier. The window shall be placed so that the patient may be observed at all times and each entrance to the room is observed from the operator position. Patient and entrance observation may be accomplished by the use of electronic devices or mirrors.
3. The shielding value of the window shall be equal to the wall in which it is mounted.
4. Booth walls shall be 2.1 meters (7 feet) in height and permanently attached to the floor or walls. The booth shall be at least 1.3 meters (4 feet) from the nearest vertical cassette holder or 0.3 meters (one foot) from the nearest corner of the examining table.
5. When a door or moveable panel is used as an integral part of the booth structure, it shall have a permissive device that prevents an exposure when the door or panel is not closed.
6. Verbal communication with the patient shall be possible at all times during the x−ray procedure.

Unofficial Text (See Printed Volume). Current through date and Register shown on Title Page.

7. The x-ray exposure control shall be located within the shielded area and at least 1 meter (3.3 feet) from the open end of the protective barrier, excluding mammography units.

(4) OPERATIONAL ANALYSIS. The department may require additional modifications to a shielding plan after initial approval of the plan if a subsequent analysis of operating conditions indicates the possibility of a person receiving a dose in excess of the limits prescribed in ss. DHS 157.22 (1) and (5) to (8) and 157.23 (1) and (2). An existing x−ray room constructed using 5 mSv (500 mR) as the public exposure limit may continue to operate without modification until the x−ray equipment is replaced or the room is modified.

History: CR 01−108: cr. Register July 2002 No. 559, eff. 8−1−02; **CR 06−021: am. (3) (a) Register October 2006 No. 610, eff. 11−1−06.**

DHS 157.82 General administrative requirements for facilities using therapeutic radiation machines for human use. (1) ADMINISTRATIVE CONTROLS. A registrant shall be responsible for directing the operation of the therapeutic radiation machines that have been registered with the department. All persons operating a therapeutic radiation machine shall be instructed in and shall comply with the provisions of the radiation safety requirements of ss. DHS 157.22 (1) and (5) to (8) and 157.25 (2). A therapeutic radiation machine that does not meet the provisions of this subchapter but is of a type accepted by the US food and drug administration may not be used for irradiation of human patients.

(2) TRAINING FOR RADIATION THERAPY USERS. (a) A registrant for any therapeutic radiation machine, except dermatology units under 150 kV, shall require the authorized user to be a physician who meets any of the following requirements:

1. Certified or board eligible in one or more of the following:

a. Radiology or therapeutic radiology by the American board of radiology.

b. Radiation oncology by the American osteopathic board of radiology.

c. Radiology, with specialization in radiotherapy, as a British "Fellow of the Faculty of Radiology" or "Fellow of the Royal College of Radiology".

d. Therapeutic radiology by the Canadian royal college of physicians and surgeons.

2. Actively practices therapeutic radiology and has completed all of the following:

a. The radiation therapy residency.

b. Two hundred hours of instruction in basic radiation techniques applicable to the use of an external beam radiation therapy unit.

c. Five hundred hours of supervised work experience in therapeutic radiology.

d. A minimum of 3 years of supervised clinical experience or 5 years of post graduate clinical experience in therapeutic radiology.

3. Has equivalent training and submits the training of the prospective user physician for department review on a case−by−case basis.

(b) A dermatologist using x−ray units under 150 kV shall be board certified in dermatology or have 40 hours of instruction and 100 hours of supervised therapeutic work using x−ray units for the treatment of skin diseases.

(c) A registrant for electronic brachytherapy shall require the authorized user to complete device specific instruction from the manufacturer or individual trained by the manufacturer, and training on procedures required by s. DHS 157.85(16)(g) 4. and 5..

(3) VISITING USERS. A registrant may permit any physician qualified under sub. (2) to act as a visiting user under the term of the registrant's registration for up to 60 days per year under all the following conditions:

(a) The visiting user has the prior written permission of the registrant's management and if the use occurs on behalf of an institution, the institution's radiation safety committee.

(b) The registrant maintains copies of all records documenting the qualifications of the visiting user for 3 years from the date of the last visit.

(4) MEDICAL PHYSICIST SUPPORT. (a) The services of a medical physicist is required in facilities having one or more therapeutic radiation machines.

(b) The registrant for any therapeutic radiation machine shall require the medical physicist to have any of the following:

1. Certification by the American board of radiology in one or more of the following:

a. Therapeutic radiological physics.

b. Roentgen−ray and gamma−ray physics.

c. X−ray and radium physics.

Unofficial Text (See Printed Volume). Current through date and Register shown on Title Page.

d. Radiological physics.
2. Certification by the American board of medical physics in radiation oncology physics.
3. Certification by the Canadian college of medical physics.
4. A master's or doctor's degree in physics, biophysics, radiological physics or health physics and have completed one year of full−time training in therapeutic radiological physics and one year of full−time work experience under the supervision of a medical physicist at a medical institution. A person qualifying under this subdivision shall work under the supervision of a medical physicist qualified under subd. 1., 2. or 3. A registrant employing a physicist who qualifies under this subdivision shall provide the department with a statement of training and experience, signed by the preceptor medical physicist or provide a letter from another state accepting the person as a therapeutic medical physicist.
(c) The medical physicist shall be responsible for all of the following:
1. Full calibrations and protection surveys.
2. Supervision and review of dosimetry.
3. Beam data acquisition and transfer for computerized dosimetry and supervision of its use.
4. Quality control, including quality control check review.
5. Consultation with the physician user in treatment planning, as needed.
6. Performance of calculations and assessments regarding medical events.
7. Acceptance testing of the machine after any repair or service that may have altered the machine's performance characteristics.
(d) If the medical physicist is not a full−time employee of the registrant, the operating procedures shall also specifically address how the medical physicist is to be contacted for problems or emergencies, as well as the specific actions to be taken until the medical physicist may be contacted.
(5) QUALIFICATION OF OPERATORS. (a) A person who will be operating a therapeutic radiation machine for medical use shall be an American registry of radiologic technologists registered radiation therapy technologist or a user authorized under sub. (2) or (3). A person who is not an ARRT registered radiation therapy technologist shall submit evidence that he or she has satisfactorily completed a radiation therapy technologist training program that complies with the requirements of the joint review committee on education in radiologic technology.
Note: "Essentials and Guidelines of an Accredited Educational Program for the Radiation Therapy Technologist", Joint Review Committee on Education in Radiologic Technology, 1988, establishes the requirements for a therapy technologist training program. The document is available at: http://www.jrcert.org/.
(b) The names and training of all personnel currently authorized to operate a therapeutic radiation machine shall be kept on file at the facility. Information on former operators shall be retained for a period of at least 3 years beyond the last date they were authorized to operate a therapeutic radiation machine at that facility.
(c) A person who will be operating an electronic brachytherapy unit shall complete device specific instruction from the manufacturer or individual trained by the manufacturer, and training on procedures required by s. DHS 157.85(16)(g) 4. and 5..
(6) SAFETY PROCEDURES. Written safety procedures and rules shall be developed by a medical physicist and shall be available in the control area of a therapeutic radiation machine, including any restrictions required for the safe operation of the particular therapeutic radiation machine. The operator shall be able to demonstrate familiarity with these rules. Operators, authorized users and medical physicists for electronic brachytherapy shall participate in drills of the emergency procedures, required by s. DHS 157.85(16)(g) 5., intially and at least annually thereafter.
(7) WRITTEN DIRECTIVE REQUIRED. Persons may not be exposed to the useful beam except for medical therapy purposes and unless exposure has been ordered in writing by a physician user qualified under sub. (2) or (3). This provision specifically prohibits deliberate exposure of an person for training, demonstration or other non−healing arts purposes.
(8) INFORMATION AND RECORDS. The registrant shall maintain all of the following information in a separate file or package for each therapeutic radiation machine for inspection by the department:
(a) Report of acceptance testing.
(b) Records of all surveys, calibrations and periodic quality control checks of the therapeutic radiation machine, as well as the names of persons who performed those activities.
(c) Records of maintenance or modifications performed on the therapeutic radiation machines, as well as the names of persons who performed these services.
(d) Signature of each person authorizing the return of a therapeutic radiation machine to clinical use after service, repair or upgrade.

Unofficial Text (See Printed Volume). Current through date and Register shown on Title Page.

(9) RECORD RETENTION. All records required by sub. (8) shall be retained for 3 years or until disposal is authorized by the department. Any required record generated prior to the last department inspection may be microfilmed or otherwise archived as long as a complete legible copy of the record may be retrieved.
History: CR 01−108: cr. Register July 2002 No. 559, eff. 8−1−02.

DHS 157.83 Administrative policies and procedures for radiation therapy machines.

(1) WRITTEN POLICIES. A registrant shall have written policies and procedures to ensure that radiation will be administered as directed by an authorized user. The policies shall meet all of the following specific objectives:
(a) Prior to administration, a written directive is prepared for any external beam radiation therapy dose or electronic brachytherapy dose. A written revision to an existing written directive may be made prior to beginning treatment, or prior to delivery of a fractional dose, provided that the revision is dated and signed by an authorized user ~~prior to administration of the external beam radiation therapy dose, or the next radiation therapy fractional dose~~. If, because of the patient's condition, a delay to provide a written revision to an existing written directive would jeopardize the patient's health, an oral revision to an existing written directive shall be acceptable provided that the oral revision is documented immediately in the patient's record and a revised written directive is signed by an authorized user within 24 hours of the oral revision.
(b) Prior to the administration of each course of radiation treatments, the patient's identity is verified, by more than one method, as the person named in the written directive.
(c) External beam radiation therapy or electronic brachytherapy final plans of treatment and related calculations are according to the respective written directives.
(d) Each administration is according to the written directive.
(e) Any unintended deviation from the written directive is identified, documented, evaluated and appropriate action is taken.
(2) DEVELOPMENT OF THE OPERATIONAL PROCEDURES PROGRAM. A therapy device registrant shall do all the following:
(a) Develop an operational procedures program that specifies staff duties and responsibilities, and equipment and procedures. The registrant shall implement the program upon issuance of a certificate of registration by the department.
(b) Develop procedures for and conduct a review of the program including, since the last review, an evaluation of a representative sample of patient administrations and all medical events to verify compliance with all aspects of the operational procedures program.
(c) Conduct program reviews at intervals not to exceed 12 months.
(d) Evaluate each of the reviews specified in par. (b) to determine the effectiveness of the program and, if required, make modifications to meet the requirements of par. (b).
(e) Maintain records of each review specified in par. (b), including the evaluations and findings of the review, in an auditable form for 3 years.
(3) MEDICAL EVENTS. (a) A registrant shall report any of the following medical events:
1. A dose that differs from the prescribed dose by more than 0.05 Sv (5 rem) effective dose equivalent, 0.5 Sv (50 rem) to an organ or tissue or 0.5 Sv (50 rem) shallow dose equivalent to the skin and any of the following exist:
a. The total dose delivered differs from the prescribed dose by 20% or more.
b. The fractionated dose delivered exceeds the prescribed dose, for a single fraction, by 50% or more.
2. A dose that exceeds 0.05 Sv (5 rem) effective dose equivalent, 0.5 Sv (50 rem) to an organ or tissue or 0.5 Sv (50 rem) shallow dose equivalent to the skin under any of the following conditions:
a. An administration of a dose to the wrong patient or human research subject.
b. An administration of a dose delivered by the wrong mode of treatment.
3. A dose to an organ outside the intended treatment volume that exceeds the expected dose to that organ by 0.5 Sv (50 rem) where the excess dose is greater than 50% of the expected dose to that organ.
(b) In response to a medical event, a registrant shall do all of the following:
1. Notify their department head no later than the next calendar day after discovery of the medical event.
2.
a. Submit a written report to the department within 15 working days after discovery of the medical event. The written report shall include: the registrant's name; the prescribing physician's name; a brief description of the event; the effect on the patient; what improvements are needed to prevent recurrence; actions taken

Unofficial Text (See Printed Volume). Current through date and Register shown on Title Page.

to prevent recurrence; whether the registrant notified the patient or the patient's responsible relative or guardian and if not, why not; and if the patient was notified, what information was provided to the patient.
Note: Mail the report to the Department at: Department of Health and Family Services, Radiation Protection Section, PO Box 2659, Madison WI 53701−2659.
b. The report in subd. 2. a. may not include the patient's name or other information that could lead to identification of the patient.
3. Notify the referring physician and the patient of the medical event no later than 24 hours after the medical event's discovery, unless the referring physician personally informs the registrant either that he or she will inform the patient or that, based on medical judgment, telling the patient would be harmful. The registrant is not required to notify the patient without first consulting the referring physician. If the referring physician or patient cannot be reached within 24 hours, the registrant shall notify the patient of the medical event as soon as possible. The registrant may not delay any appropriate medical care for the patient, including any necessary remedial care as a result of the medical event, because of any delay in notification.
4. Retain a record of each medical event for 3 years. The record shall contain all of the following:
a. The names of all persons involved.
b. The patient's unique identification number.
c. A brief description of the event, why it occurred and the effect on the patient.
d. What improvements are needed to prevent recurrence and the actions taken to prevent recurrence.
e. Whether the registrant notified the patient or patient's guardian and if not, why not, and if the patient was notified, what information was provided to the patient.
f. If information was not given to the patient at the direction of the referring physician, the reason why the information was not given to the patient.
5. If the patient was notified, furnish, within 15 working days after discovery of the medical event, a written report to the patient by sending either a copy of the report that was submitted to the department, or a brief description of both the event and the consequences as they may affect the patient, if a statement is included that the report submitted to the department may be obtained from the registrant.
(4) RIGHTS. Aside from the notification requirement, nothing in this section affects any rights or duties of registrants and physicians in relation to each other, patients or the patient's responsible relatives or guardians.
History: CR 01−108: cr. Register July 2002 No. 559, eff. 8−1−02; **CR 06−021: am. (2) (b) Register October 2006 No. 610, eff. 11−1−06.**

DHS 157.84 Technical requirements for facilities using therapeutic radiation machines.

(1) RADIATION PROTECTION SURVEYS. (a) A registrant shall ensure that radiation protection surveys of all new facilities and existing facilities not previously surveyed are performed with an operable, calibrated survey instrument. The radiation protection survey shall be performed by or under the direction of a medical physicist and shall verify that, with the therapeutic radiation machine in a "BEAM−ON" condition, with the largest clinically available treatment field and with a scattering phantom in the useful beam of radiation, all of the following requirements are met:
1. Radiation levels in restricted areas are not likely to cause personnel exposures in excess of the limits specified in s. DHS 157.22 (1) (a).
2. Radiation levels in unrestricted areas do not exceed the limits specified in s. DHS 157.23 (1) (a) and (b).
(b) A radiation protection survey shall be performed prior to any subsequent medical use after making any of the following changes:
1. Any change in the treatment room shielding.
2. Any change in the location of the therapeutic radiation machine within the treatment room.
3. Relocating the therapeutic radiation machine.
4. Using the therapeutic radiation machine in a manner that could result in increased radiation levels in areas outside the external beam radiation therapy treatment room.
(c) The survey record shall indicate all of the following:
1. Instances where the facility, in the opinion of the medical physicist, is in violation of applicable regulations.
2. The date of the measurements.
3. The reason the survey is required.
4. The radiation therapy machine manufacturer's name.
5. The model and serial number of the therapeutic radiation machine.
6. The instruments used to measure radiation levels and their last date of calibration.

Unofficial Text (See Printed Volume). Current through date and Register shown on Title Page.

7. A floor plan of the areas surrounding the treatment room that were surveyed.
8. The radiation level at several points in each area expressed in microsieverts or millirems per hour.
9. The calculated maximum level of radiation over a period of one week for each restricted and unrestricted area.
10. The signature of the person responsible for conducting the survey.
(d) If the results of radiation protection surveys indicate any radiation levels in excess of the respective limit, the registrant shall lock the control in the "OFF" position and may not use the unit except under one or more of the following conditions:
1. As may be necessary to repair, replace or test the therapeutic radiation machine, the therapeutic radiation machine shielding or the treatment room shielding.
2. Until the registrant has received a specific exemption from the department.
(2) MODIFICATION OF RADIATION THERAPY UNIT OR ROOM BEFORE BEGINNING A TREATMENT PROGRAM. If the survey indicates that a person in an unrestricted area may be exposed to levels of radiation greater than those permitted by s. DHS 157.23 (1) (a) and (b), before beginning the treatment program, the registrant shall do all of the following:
(a) Equip the unit with beam direction interlocks or add additional radiation shielding to ensure compliance with s. DHS 157.23 (1) (a) and (b).
(b) Perform the survey again.
(c) Include in the report the results of the initial survey, a description of the modification made and the results of the second survey.
(d) Submit facility design information to the department prior to installation of a therapeutic radiation machine of higher energy into a room not previously approved for that energy and receive approval from the department prior to actual installation of the therapeutic radiation machine.
(3) DOSIMETRY EQUIPMENT. (a) 1. A registrant shall have a calibrated dosimetry system available for use. The dosimetry system shall be calibrated by a certified calibration facility at least every 24 months and after any servicing that may affect system calibration.
2. For beams with energies greater than one MeV, the dosimetry system shall be calibrated for Cobalt−60.
3. For beams with energies equal to or less than one MeV, the dosimetry system shall be calibrated at an energy or energy range appropriate for the radiation being measured.
(b) A registrant shall have a dosimetry system for quality control check measurements. The system may be compared with another system whose calibration is traceable to the national institute of standards and technology. The comparison shall be performed at least every 24 months and after each servicing that may affect system calibration.
(c) A registrant shall maintain a record of each dosimetry system calibration, intercomparison and comparison for the duration of the registration. For each calibration, intercomparison or comparison, the record shall include all of the following:
1. The date.
2. The model and serial numbers of the instruments that were calibrated, inter−compared or compared.
3. The correction factors that were determined.
4. The names of the persons who performed the calibration, intercomparison or comparison.
5. Evidence that the intercomparison was performed by or under the direct supervision and in the physical presence of a medical physicist.
(4) SURVEY INSTRUMENTS. Except for dermatology offices with systems operating at less than 150 kV, each facility location authorized to use a therapeutic radiation machine shall possess appropriately calibrated portable monitoring equipment. Equipment shall include a portable radiation measurement survey instrument capable of measuring dose rates over the range 10 μSv (one mrem) per hour to 10 mSv (1000 mrem) per hour. The survey instruments shall be operable and calibrated.
(5) SHIELDING AND SAFETY DESIGN REQUIREMENTS.
(a) Facility design information for all new installations of a therapeutic radiation machine or installations of a therapeutic radiation machine of higher energy into a room not previously approved for that energy shall be submitted to the department and approved by the department prior to actual installation of the therapeutic radiation machine.
(b) Observation and communication with the patient shall be possible at all times.
History: CR 01−108: cr. Register July 2002 No. 559, eff. 8−1−02. **DHS 157.85 Therapeutic radiation machines.**

Unofficial Text (See Printed Volume). Current through date and Register shown on Title Page.

DHS 157.85 Therapeutic radiation machines. (1) LEAKAGE RADIATION. (a) When a therapeutic radiation machine is operated at its maximum dose rate, the leakage air kerma rate may not exceed the value specified at the distance specified for that classification of therapeutic radiation machine.
(b) Leakage radiation from contact therapy systems may not exceed one mGy (103 mR) per hour at 5 centimeters from the surface of the tube housing assembly. Contact therapy tube housing assemblies shall have a removable shield of material, equivalent in attenuation to 0.5 millimeters of lead at 100 kV, which may be positioned over the entire useful beam exit port during periods when the beam is not in use.
(c) Leakage radiation from systems operating at 150 kV or less may not exceed one mGy (103 mR) per hour at one meter from the tube housing.
(d) Leakage radiation from systems operating above 150 kV may not exceed 0.1% of the useful beam one meter from the source housing for any of its operating conditions.
(2) PERMANENT BEAM−LIMITING DEVICES. Permanent, non−adjustable collimators used for limiting the useful beam shall provide at least the same degree of attenuation as required for the tube housing assembly.
(3) ADJUSTABLE OR REMOVEABLE BEAM−LIMITING DEVICES.
(a) All removable beam−limiting devices or diaphragms may not transmit more than one percent of the useful beam for the most penetrating beam used. This paragraph does not apply to beam shaping blocks or shaping materials.
(b) When adjustable beam−limiting devices are used, the position and shape of the useful beam shall be indicated by a light beam. These devices may transmit not more than 5% of the useful beam.
(4) FILTER SYSTEMS. The filter system shall be designed to meet all of the following requirements:
(a) Accidental displacement of filters is not possible at any tube orientation.
(b) If the proper filter is not in place, an interlock system shall prevent irradiation.
(c) The air kerma rate escaping from the filter placement opening slot in the tube head may not exceed 100 mGy (one rad) per hour at one meter under any operating conditions.
(d) Each filter shall be marked as to its material of construction and its thickness.
(e) Each wedge filter that is removable from the system shall be clearly marked with an identification number. For removable wedge filters, the nominal wedge angle shall appear on the wedge or wedge tray. If the wedge or wedge tray is significantly damaged, the wedge transmission factor shall be reestablished.
(f) If the absorbed dose rate information relates exclusively to operation with a field flattening filter or beam scattering foil in place, that foil or filter shall be removable only by the use of tools.
(5) TUBE IMMOBILIZATION. (a) An x−ray tube shall be mounted so that it cannot accidentally turn or slide with respect to the opening in the tube housing through which radiation is emitted.
(b) The tube housing assembly shall be capable of being immobilized.
(6) EMERGENCY SWITCHES. At least one emergency power cutoff switch shall be present. If more than one emergency power cutoff switch is installed and not all switches are tested at once, each switch shall be tested on a rotating basis. Safety quality control checks of the emergency power cutoff switches may be conducted at the end of the treatment day to minimize possible stability problems with the therapeutic radiation machine.
(7) SOURCE MARKING. An x−ray tube housing assembly shall be marked so that it is possible to determine the location of the focal spot to within 5 millimeters and the marking shall be readily accessible for use during calibration procedures.
(8) TIMER. (a) A suitable irradiation control device shall be provided to terminate the irradiation after a preset time interval or after a preset radiation dose has been delivered.
(b) A timer with a display shall be provided at the treatment control panel. The timer shall have a pre−set time selector and an elapsed time or time remaining indicator.
(c) A timer shall be a cumulative timer that activates with an indication of "BEAM−ON" and retains its reading after irradiation is interrupted or terminated. After irradiation is terminated and before irradiation may be reinitiated, it shall be necessary to reset the elapsed time indicator.
(d) A timer shall terminate irradiation when a pre−selected time has elapsed, if any dose monitoring system present has not previously terminated irradiation.
(e) A timer may not permit an exposure if set at zero.
(f) A timer may not activate until the shutter is opened when irradiation is controlled by a shutter mechanism unless calibration includes a timer end effect correction to compensate for mechanical lag.

Unofficial Text (See Printed Volume). Current through date and Register shown on Title Page.

(g) A timer shall be accurate to within one percent of the selected value or one second, whichever is greater.

(9) CONTROL PANEL INDICATORS. An x−ray unit shall have all of the following:

(a) An indication at the control panel of whether electrical power is on and if activation of the x−ray tube is possible.

(b) An indication of whether x−rays are being produced.

(c) A means for indicating x−ray tube potential and current.

(d) A means for terminating an exposure at any time.

(e) A locking device that will prevent unauthorized use of the therapeutic radiation machine.

(10) TARGET TO SKIN DISTANCE. There shall be a means of determining the central axis target to skin distance to within 2 millimeters and of reproducing this measurement to within 2 millimeters thereafter.

(11) SHUTTERS. Unless it is possible to bring the x−ray tube output to the prescribed exposure parameters within 5 seconds after the x−ray "ON" switch is energized, the beam shall be attenuated by a shutter having a shielding equivalency not less than that of the tube housing assembly. In addition, after the unit is at operating parameters, the shutter shall be controlled by the operator from the control panel. An indication of shutter position shall appear at the control panel.

(12) LOW FILTRATION MACHINES. Each therapeutic radiation machine equipped with a beryllium or other low filtration window shall be clearly labeled on the tube housing assembly and shall be provided with a permanent warning device on the control panel that is activated when no additional filtration is present, to indicate that the dose rate is very high.

(13) FULL CALIBRATION MEASUREMENTS. (a) Full calibration of a therapeutic radiation machine shall be performed by or under the direct supervision of a medical physicist under all of the following conditions:

1. Before the first medical use following installation or reinstallation of the therapeutic radiation machine.
2. At intervals not exceeding 12 months.
3. Before medical use under all of the following conditions:

a. Whenever quality control check measurements indicate that the radiation output differs by more than 5% from the value obtained at the last full calibration and the difference cannot be reconciled.

b. Following any component replacement, major repair or modification of components that could significantly affect the characteristics of the radiation beam.

(b) Full calibration of therapeutic radiation machines with multi−energy capabilities is required only for those operational modes or radiation energies that are not within their acceptable range.

(c) If the repair, replacement or modification does not affect all energies, full calibration shall be performed on the affected energy that is in most frequent clinical use at the facility. The remaining energies may be validated with quality control check procedures.

(d) Full calibration shall include all measurements recommended for annual calibration by protocols approved by recognized national or international organizations. An acceptable protocol is the "Protocol for clinical reference dosimetry of high−energy photon and electron beams" as stated in AAPM Report No. 67, American Association of Physicists in Medicine, 1999.

Note: Report No. 67 "Protocol for Clinical Reference Dosimetry of High−Energy Photon and Electron Beams," was published in *Medical Physics*, 26 (9), September 1999, pp. 1847−70. The report may also be obtained from: Medical Physics Publishing, 4531 Vernon Blvd., Madison WI 53705−4964 or ordered from their website: www.medicalphysics.org.

(e) A registrant shall maintain a record of each calibration for the duration of the registration. The record shall include all of the following:

1. The date of the calibration.
2. The manufacturer's name, model and serial number for both the therapeutic radiation machine and the x−ray tube.
3. The model and serial numbers of the instruments used to calibrate the therapeutic radiation machine.
4. The signature of the medical physicist responsible for performing the calibration.

(em) Full calibration for electronic brachytherapy units shall include all of the following:

1. Timer accuracy and linearity over the typical range of use.
2. Proper operation of back-up exposure control devices.
3. The output within 2 % of the expected value, if applicable, or determination of the output if there is no expected value.
4. Evaluation that the relative dose distribution about the source is within 5 % of the expected value.
5. Source position accuracy to within 1 millimeter within the applicator.

Unofficial Text (See Printed Volume). Current through date and Register shown on Title Page.

6. Determination of the proper length of source transfer tubes and applicators.
7. Determination of the operability of the source transfer tubes, applicators and transfer tube-applicator interfaces.

(14) QUALITY CONTROL CHECKS. (a) Quality control checks shall be performed on therapeutic radiation machines.

(b) Quality control checks shall meet all of the following requirements:

1. A registrant shall perform quality control checks using written procedures established by a medical physicist.
2. The quality control check procedures shall specify all of the following:

a. The frequency at which tests or measurements are to be performed.

b. Which quality control checks are to be performed during calibration.

c. The acceptable tolerance for each parameter measured in the quality control check when compared to the value for that parameter.

(c) The cause for a parameter exceeding a tolerance set by the medical physicist shall be investigated and corrected before the system is used for patient irradiation.

(d) Whenever a quality control check indicates a significant change in the operating characteristics of a system, as specified in the medical physicist's quality control check procedures, the system shall be recalibrated.

(e) A registrant shall have the medical physicist review and sign the results of each radiation output quality control check and notify the registrant of results within 10 working days of the date that the check was performed.

(f) A registrant shall ensure that daily safety quality control checks of therapeutic radiation machines are performed.

(fm) If the results of the quality control checks indicate malfunction of any system, the registrant shall prevent clinical use of the system until repaired.

(g) Safety quality control checks shall be performed prior to the first treatment of the day to ensure proper operation of all of the following:

1. Electrical interlocks at each external beam radiation therapy room entrance.
2. The "BEAM−ON" and termination switches.
3. Beam status indicator lights on the access doors, control console and in the radiation therapy room.
4. Viewing and intercom systems, if applicable.
5. If applicable, electrically operated treatment room doors from inside and outside the treatment room.
6. If applicable, the integrity of all cables, catheters or parts of the device that carry high voltages.

(gm) Daily quality control checks for electronic brachytherapy shall include all the following:

1. The output of the x-ray source falls within 3 % of expected values, which includes output as a function of time or output as a function of setting on a monitor chamber.
2. Verification of the consistency of the dose distribution to within 3 % of that found during calibration.
3. Validation of the operation of positioning methods to assure that the treatment dose exposes the intended location to within 1 mm.
4. Inspection of all treatment components on the day of use.

(h) A registrant shall maintain a record of each quality control check for 3 years. The record shall include all of the following:

1. The date of the quality control check.
2. The manufacturer's name, model and serial number of the therapeutic radiation machine.
3. The manufacturer's name, model number and serial number for the instruments used to measure the radiation output of the therapeutic radiation machine.
4. The signature of the person who performed the periodic quality control check.

(15) QUALITY CONTROL CHECKS FOR ACCELERATORS. (a) Periodic quality control checks shall be performed on all therapeutic radiation machines at intervals recommended by the manufacturer or by recognized national or international organizations.

Note: An acceptable reference is "*Comprehensive QA for Radiation Oncology: Report of AAPM Radiation Therapy Committee Task Group 40*," AAPM Report No. 46, American Association of Physicists in Medicine, April, 1994.

(b) Quality control checks shall include determination of central axis radiation output and a representative sampling of periodic quality control checks according to recommendations of national or international organizations. Representative sampling shall include all referenced periodic quality control checks in an interval not to exceed 14 consecutive calendar months.

Unofficial Text (See Printed Volume). Current through date and Register shown on Title Page.

Note: An acceptable reference is "*Comprehensive QA for Radiation Oncology: Report of AAPM Radiation Therapy Committee Task Group 40,*" AAPM Report No. 46, American Association of Physicists in Medicine, April, 1994. The publication may be consulted at the Department of Health and Family Services, Radiation Protection Section, 1 West Wilson St, Room 150, Madison WI 53702−0007. AAPM reports may be obtained from Medical Physics Publishing, 4513 Vernon Blvd., Madison WI 53705−4964 or ordered from their website: *www.medicalphysics.org*.

(16) OPERATING PROCEDURES. (a) A therapeutic radiation machine may not be left unattended unless secured.

(b) When a patient must be held in position for radiation therapy, mechanical supporting or restraining devices or other means recommended by a physician shall be used.

(c) An x−ray tube housing assembly may not be held by a person during operation unless the assembly is designed to require holding and the peak tube potential of the system does not exceed 50 kV. In these cases, the holder shall wear protective gloves and apron of not less than 0.5 millimeters lead equivalency at 100 kV.

(d) A copy of the current operating and emergency procedures shall be maintained at the therapeutic radiation machine control console.

(e) No person other than the patient may be in the treatment room during exposures from therapeutic radiation machines operating above 150 kV. At energies less than or equal to 150 kV, any person, other than the patient, in the treatment room shall be protected by a barrier sufficient to meet the requirements of s. DHS 157.22 (1).

(f) A registrant shall promptly repair any system that is not operating properly.

(g) A registrant for electronic brachytherapy shall do all of the following:

1. Ensure the electronic brachytherapy unit is inoperable, either by hardware or password, when unattended by qualified staff or service personnel.

2. Secure the unit, console, console keys and the treatment room when unattended or not in use.

3. Prevent dual operation of more than one radiation producing device in a treatment room, if applicable.

4. Create a written procedure for safe operation of each device.

5. Develop, implement and maintain written procedures for responding to an abnormal situation. The procedure shall include all the following:

a. Instructions for responding to equipment failures and the names of the persons responsible for implementing corrective actions.

b. The names and telephone numbers of the licensed practitioner, the medical physicist, the radiation safety officer and the manufacturer to be contacted if the unit or console operates abnormally.

6. Maintain a copy of the procedures required by subd. 4. and 5. at the unit console.

7. Ensure all of the following is done during treatment:

a. Only individuals approved by the authorized user, radiation safety officer or medical physicist may be present in the treatment room.

b. Protective shielding shall be available for persons in the treatment room.

c. A radiation survey is performed when the unit and/or shielding is portable to verify proper shielding placement immediately upon initiation of treatment.

d. A medical physicist and operator shall be physically present during the initiation and course of patient treatment.

e. A medical physicist or operator shall monitor the position of all persons in the treatment room to prevent unshielded exposure.

f. A medical physicist or operator shall monitor all entrances to prevent entering individuals from unshielded exposure.

g. Only mechanical supporting or restraining devices may be used to hold a patient in position, when applicable.

History: CR 01−108: cr. Register July 2002 No. 559, eff. 8−1−02.

DHS 157.86 Registration of radiation machine facilities.

(1) REGISTRATION FEES. (a) An annual registration fee shall be levied for each site registration under this section, according to the following schedule:

1. For a site having an ionizing radiation installation serving physicians and clinics, osteopaths and clinics, chiropractors or hospitals, the fee shall be $50 for each site and $50 for each x−ray tube.

2. For a podiatric or veterinary site having an ionizing radiation installation, the fee shall be $50 for each site and $50 or each x−ray tube.

Unofficial Text (See Printed Volume). Current through date and Register shown on Title Page.

3. For a dental site having an ionizing radiation installation, the fee shall be $50 for each site and $35 for each x−ray tube.
4. For an industrial, school, research project or other site having an ionizing radiation installation, the fee shall be $50 for each site and $50 for each x−ray tube.
5. An additional fee of $50, regardless of the number of devices, shall be required for each registration whenever the annual fee for renewal is not paid prior to the expiration of the registration.
6. A change of ownership requires re−registration and fees paid by the new registrant.
7. Any change in registration information shall be submitted to the department within 30 days after the change takes place. No fee is required for recording changes in registration information.
8. Manufacturing, testing or servicing facilities shall be considered as one x−ray tube for registration purposes.
9. Electron microscopes and extremity bone densitometers are exempt from registration fees after the initial registration.

(2) EXEMPTIONS. The following items are exempted from the requirements of this section:
(a) Electronic equipment that produces radiation incidental to its operation for other purposes, such as x−rays from radio or television transmitter high voltage tubes.
(b) Radiation machines in transit or storage.
(c) Domestic television receivers and computer monitors.

(3) RECIPROCAL RECOGNITION OF OUT−OF−STATE RADIATION MACHINES.
(a) Whenever any radiation machine is to be brought into the state, for any temporary use, the person proposing to bring the machine into the state shall give written notice to the department by mail or facsimile at least 48 hours before the machine is to be used in the state. The notice shall include all the following information:
1. The type of radiation machine.
2. The nature, duration and scope of intended use.
3. The exact location or locations where the radiation machine is intended to be used.
4. States in which the machine is registered.
(b) If, for a specific case, the 48−hour notice period would impose an undue hardship on the person, that person may apply to the department for verbal permission to proceed sooner.
Note: The department may be contacted by phone at 608−267−4784 or facsimile at 608− 267−4799.
(c) The person in control shall do all the following:
1. Comply with all applicable rules of the department.
2. Supply the department with other information as the department requests.
3. Not operate within the state on a temporary basis in excess of 30 calendar days per year without obtaining a Wisconsin registration.
History: CR 01−108: cr. Register July 2002 No. 559, eff. 8−1−02; **CR 06−021: am. (1) (a) 1. to 5. Register October 2006 No. 610, eff. 11−1−06**.

Subchapter IX — Cabinet and Analytical X−ray Systems

DHS 157.87 Radiation safety requirements.

(1) GENERAL REQUIREMENTS. For certified cabinet x−ray systems including those designed to allow admittance of individuals, all of the following requirements apply:
(a) No registrant may permit any individual to operate a cabinet x−ray system until the individual has received a copy of and instruction in the operating procedures for the system. Records that demonstrate training compliance with this paragraph shall be maintained for department inspection until disposal is authorized by the department.
(b) Tests for proper operation of all interlocks shall be conducted and recorded at intervals not to exceed 12 months. Records of these tests shall be maintained for department inspection until disposal is authorized by the department.
(c) Compliance with dose limit requirements and radiation monitoring requirements of s. DHS 157.23 (1) (a) to (c) and 21 CFR 1020.40 shall be evaluated at intervals not to exceed one year. Records of these evaluations shall be maintained for department inspection for 3 years after the evaluation.
(d) A certified cabinet x−ray system shall be maintained in compliance with 21 CFR 1020.40. No modification may be made to the system without prior department approval.
Note: The title of 21 CFR 1020.40 is Cabinet X−ray Systems (39 Federal Register 12986, April 10, 1974).

Unofficial Text (See Printed Volume). Current through date and Register shown on Title Page.

(2) RADIATION SAFETY REQUIREMENTS FOR ANALYTICAL X−RAY SYSTEMS. The following safety equipment shall be used with all analytical x−ray systems except as otherwise noted:
(a) *Safety device.* An analytical x−ray system utilizing an open beam configuration shall incorporate a safety device that prevents any portion of an individual's body from entering the primary x−ray beam path or that causes the beam to be shut off upon entry into its path. The person in control at the facility may apply to the department for an exemption from the requirement for a safety device. The application shall include all the following information:
1. A description of the various safety devices that have been evaluated by the person in control.
2. The reason each device evaluated in subd. 1. cannot be used.
3. A description of the alternative safety methods available to minimize the possibility of an accidental exposure, including procedures to assure that operators and others in the area will be informed of the absence of safety devices. The department shall approve the alternate safety devices prior to their installation on the system.
(b) *Warning devices.* Open−beam configurations shall be provided with a readily discernible indication of either of the following:
1. An indication of whether the x−ray tube is on or off, if the primary beam is controlled in this manner.
Note: The x−ray tube status is located near the radiation source housing.
2. An indication of whether the shutter is open or closed, if the primary beam is controlled in this manner.
Warning devices shall be labeled so that their purpose is easily identified.
Note: The shutter status is located near each port on the radiation source housing.
(c) *Ports.* Unused ports on radiation source housings shall be secured in the closed position in a manner that will prevent casual opening.
(d) *Labeling.* All analytical x−ray equipment shall be labeled with a readily discernible sign or signs bearing the radiation symbol and the words:
1. "CAUTION − HIGH INTENSITY X−RAY BEAM," or words having a similar intent, on an x−ray source housing.
2. "CAUTION RADIATION − THIS EQUIPMENT PRODUCES RADIATION WHEN ENERGIZED," or words having a similar intent, near any switch that energizes an x−ray tube if the radiation source is an x−ray tube.
(e) *Shutters.* On open−beam configurations installed after January 1, 1979, each port on the radiation source housing shall be equipped with a shutter that cannot be opened unless a collimator or a coupling has been connected to the port.
(f) *Warning lights.* An easily visible warning light labeled with the words "X−RAY ON," or words having a similar intent, shall be located as follows:
1. Near any switch that energizes an x−ray tube and illuminates only when the tube is energized.
2. In the case of a radioactive source, near any switch that opens a housing shutter and illuminates only when the shutter is open.
(g) *Radiation source housing.* An x−ray tube housing shall be so constructed that with all shutters closed the leakage radiation measured at a distance of 5 centimeters from its surface is not be capable of producing an air kerma in excess of 25 uSv (2.5 mrem) in one hour at any specified tube rating.
(h) *Generator cabinet.* An x−ray generator shall be contained within a protective cabinet which limits leakage radiation measured at a distance of 5 centimeters from its surface to no more than 2.5 uSv (2.5 mrem) in one hour.
(3) AREA REQUIREMENTS. (a) *Radiation levels.* The local components of an analytical x−ray system shall be located and arranged and shall include sufficient shielding or access control so no radiation levels exist in any area surrounding the local component group that could result in a dose to any individual in excess of the dose limits in s. DHS 157.23 (1). For systems utilizing x−ray tubes, the permissible radiation levels shall be met at any specified
tube rating.
(b) *Surveys.* To demonstrate compliance with par. (a), radiation surveys of an analytical x−ray system shall be performed according to all the following criteria:
1. Upon installation of the equipment.
2. Following any change in the initial arrangement, number or type of local components in the system.
3. Following any maintenance requiring the disassembly or removal of a local component in the system.
4. During the performance of maintenance and alignment procedures if the procedures require the presence of a primary x−ray beam when any local component in the system is disassembled or removed.

Unofficial Text (See Printed Volume). Current through date and Register shown on Title Page.

5. Any time a visual inspection of the local components in the system reveals an abnormal condition.
6. Whenever personnel monitoring devices show an increase of 50% over the previous monitoring period or the readings are approaching the limits of sub. (2) (g) or (h). Radiation survey measurements are not be required if a person in control demonstrates compliance with par. (a) in some other manner.
(c) *Posting.* Each area or room containing analytical x−ray equipment shall have at least one sign conspicuously posted bearing the radiation symbol and the words "CAUTION – X−RAY EQUIPMENT" or words having a similar intent.
(4) OPERATING REQUIREMENTS. (a) *Procedures.* Operating procedures shall be written and available to all analytical x−ray equipment workers. No individual may operate analytical x−ray equipment in any manner other than that specified in the procedures unless the individual has obtained written approval of the person in control.
(b) *Bypassing.* No individual may intentionally bypass a safety device unless the individual has obtained the approval of the person in control. When a safety device has been bypassed, a readily discernible sign bearing the words "SAFETY DEVICE NOT WORKING" or words having a similar intent shall be placed on the radiation source housing.
(5) PERSONNEL REQUIREMENTS. (a) *Instruction.* No individual may operate or maintain analytical x−ray equipment unless the individual has received instruction in and demonstrated competence in all the following:
1. Identification of radiation hazards associated with use of the equipment.
2. Significance of the various radiation warning and safety devices incorporated into the equipment or the reasons the devices have not been installed on certain pieces of equipment and the extra precautions required in such cases.
3. Proper operating procedures for the equipment.
4. Symptoms of an acute localized exposure that may cause a radiation burn.
5. Proper procedures for reporting an actual or suspected exposure.
(b) *Personnel monitoring.* Finger or wrist dosimetry devices shall be provided to and used by any of the following individuals:
1. An analytical x−ray equipment worker using a system having an open−beam configuration and not equipped with a safety device.
2. Personnel maintaining analytical x−ray equipment if the maintenance procedures require the presence of a primary x−ray beam when any local component in the analytical x−ray system is disassembled or removed. Reported dose values may not be used for the purpose of determining compliance with s. DHS 157.22 unless the dose values are evaluated by a medical physicist.
(6) IMAGING DEVICES. Industrial uses of hand−held imaging intensification devices are exempt from the requirements of this subchapter if the air kerma 18 inches from the source of radiation to any individual does not exceed 25 uSv (2.5 mrem) per hour. A device that exceeds this limit shall meet the requirements of this subchapter and the licensing or registration requirements of subchs. II or VIII.
History: CR 01−108: cr. Register July 2002 No. 559, eff. 8−1−02.

Subchapter X — Notices, Instructions and Reports to Workers

DHS 157.88 Posting, notification and reporting requirements.

(1) POSTING OF NOTICES TO WORKERS. (a) Except as provided in par. (b), a licensee or registrant shall post current copies of all the following documents in a conspicuous location that is accessible to workers on the way to or from the worker's work station or job location:
1. This subchapter and subch. III.
2. The license, conditions or documents incorporated into the license by reference and license amendments.
3. The operating procedures applicable to activities under the license or registration.
4. Any notice of violation, forfeiture assessment or order issued under s. 254.37 or 254.45, Stats., or this chapter and any response from the licensee or registrant until removal is authorized by the department.
5. The certificate of registration.
6. Emergency procedures that apply to activities conducted under the license or registration.
7. A "Notice to Employees" form that details the types of information that employers must give to their employees and department contact information.
Note: The "Notice to Employees" form may be obtained from the Department by writing: Department of Health and Family Services, Radiation Protection Section, P.O. Box 2659, Madison WI 53701−2659 or from the Department's website: http://dDHS.wisconsin.gov/dph_beh/RadiatioP/Index.htm.

Unofficial Text (See Printed Volume). Current through date and Register shown on Title Page.

(b) If posting of the documents specified in par. (a) 1. to 3. is not physically practical, a licensee or registrant may post a summary of the documents that states where the full documents may be examined. The documents specified in par. (a) 4. to 7. shall be posted in their entirety.
(c) A document posted under par. (a) 4. shall be posted within 2 working days after receipt of the document from the department. A licensee's or registrant's response, if any, shall be posted within 2 working days after submitting the document to the department. The documents shall remain posted for a minimum of 5 working days or until the violation has been corrected, whichever is later.
(d) Documents, notices and forms posted under par. (a) shall be replaced within 10 days if defaced or altered.
(2) INSTRUCTIONS TO WORKERS. (a) All individuals who in the course of employment are likely to receive an occupational dose in excess of one mSv (100 millirem) in a year shall be given all of the following information annually:
1. The proper storage, transfer and use of sources of radiation in the licensee's or registrant's workplace.
2. Health risks to the individual and potential offspring associated with exposure to radiation and radioactive material, precautions and procedures the individual should use in the workplace to protect themselves and minimize exposure to radiation and radioactive material, and the purposes and functions of protective devices.
3. A worker's responsibility to report promptly to the licensee or registrant any condition which may constitute, lead to or cause a violation of ss. 254.31 to 254.45, Stats., this chapter or a condition of the license.
4. How to respond in the event of any unusual occurrence or malfunction that may involve exposure to radiation or radioactive material.
5. Radiation exposure reports provided to workers under sub. (3).
(b) The extent of the instructions provided under par. (a) shall be commensurate with potential radiological health protection problems present in the workplace and shall take into consideration assigned activities during normal and abnormal situations involving exposure to radiation or radioactive material that can be reasonably be expected to occur during the life of the licensee's or registrant's activities.
(c) Records of instructions to workers required by this subsection shall be maintained by the licensee or registrant until reviewed by the department or for 5 years.
(3) NOTIFICA TIONS AND REPORTS TO INDIVIDUALS. (a) *Radiation exposure reports.* Every 12 months, a licensee or registrant shall provide a written report of radiation exposure to each employee who is required to be monitored for radiation exposure under s. DHS 157.25 (2) if the employee's annual dose exceeds 1 mSv (100 mrem) TEDE or 1 mSv (100 mrem) to any individual organ or tissue. The report shall include all of the following:
1. Name of the licensee or registrant, the name of the individual and the individual's identification number.
2. Results of any measurements, analyses and calculations of radioactive material deposited or retained in the body of the individual being monitored.
3. Any order issued under this chapter.
4. Any condition of the license or registration as shown in records maintained by the licensee or registrant under s. DHS 157.31 (7) that relates to radiation exposure of employees.
5. Each calendar quarter in which the worker's activities involved exposure to sources of radiation and the dates and locations of work. If a report under this paragraph is being provided to employees under par. (b), the report shall include the calendar quarter within which the employee terminates employment or requests a report under this subsection.
6. The radiation exposure report for each year the worker was required to be monitored under s. DHS 157.25 (2).
7. The statement: "This report is furnished to you under the provisions of Wisconsin Administrative Code, Chapter DHS 157, Radiation Protection. You should retain this report for future reference."
(b) *Reports to employees upon request.* A licensee or registrant shall provide an employee with the report required under par. (a) within 30 days of receiving a written request from the employee, or within 30 days after the dose of the individual has been determined by the licensee or registrant, whichever is later.
(c) *Reports to the department.* A licensee or registrant required to provide a report under s. DHS 157.32 (2) to (4) shall, on the same day, provide a copy of the report to the subject of the report.
(d) *Exposure request at time of termination.* At the request of a licensee's or registrant's employee or of a worker employed by another person but working in a licensee's or registrant's facility, a licensee or

Unofficial Text (See Printed Volume). Current through date and Register shown on Title Page.

registrant shall, upon a worker's termination, provide to the worker, or to the worker's designee, a written report of the radiation dose received by that worker from operations of the licensee or registrant during the current calendar quarter or fraction thereof. If the most recent individual monitoring results are not available at that time, a licensee or registrant shall provide a written estimate of the dose, clearly indicating that it is an estimate.

(e) *Documentation required to be maintained.* Documentation that a report was provided as required under this subsection shall be maintained by the licensee or registrant for 3 years after generation of the documentation.

History: CR 01−108: cr. Register July 2002 No. 559, eff. 8−1−02; **CR 06−021: am. (3) (a) 5., r. (3) (b), renum. (3) (c) to (f) to be (3) (b) to (e) Register October 2006 No. 610, eff. 11−1−06.**

Subchapter XI — Inspection by the Department

DHS 157.89 Inspection requirements.

(1) ACCESS BY DEPARTMENT INSPECTORS. The department may inspect a licensee's or registrant materials, machines, devices, activities, facilities, premises and records under this chapter at any reasonable time.

(2) PRESENCE OF REPRESENTATIVES OF LICENSEE OR REGISTRANT DURING INSPECTION.

(a) A licensee, registrant or designee may accompany department inspectors during an inspection.

(b) If, at the time of inspection, an individual has been authorized by the workers to represent them during department inspections, a licensee or registrant shall notify the inspectors of that authorization and shall permit the workers' representative to accompany the inspectors during the inspection of physical working conditions.

(c) Each workers' representative shall be routinely engaged in work under control of the licensee or registrant and shall have received instructions as specified in s. DHS 157.88 (2).

(d) Different representatives of a licensee or registrant or workers may accompany the department's inspectors during different phases of an inspection if there is no interference with the conduct of the inspection, but only one workers' representative at a time may accompany the inspectors.

(e) With the approval of a licensee or registrant and the workers' representative, an individual who is not routinely engaged in work under control of the licensee or registrant, such as a consultant to the licensee or registrant or to the workers' representative, may accompany department inspectors during the inspection of physical working conditions.

(f) Department inspectors may refuse to permit any individual who deliberately interferes with a fair and orderly inspection to accompany them on the inspection. An individual may accompany an inspector in areas containing information classified by an agency of the U.S. government in the interest of national security only if the individual is authorized to do so by the licensee or registrant. The workers' representative may enter an area containing proprietary information only if the representative has been previously authorized by the licensee or registrant to enter that area.

(3) CONSULTATION WITH WORKERS DURING INSPECTIONS. (a) Department inspectors may consult privately with workers to the extent the inspectors deem necessary for the conduct of an effective and thorough inspection.

(b) Consultation with a worker under par. (a) may be written or oral and concern any past or present condition that the worker believes contributed to, caused or may cause a violation of ss. 254.31 to 254.45, Stats., this chapter or a condition of the license, or any unnecessary exposure of an individual to sources of radiation under the licensee's or registrant's control. Written information received by inspectors under this paragraph shall comply with the requirements of sub. (4).

(4) REQUEST BY WORKERS FOR AN INSPECTION. (a) A worker or workers' representative who believes that a violation of ss. 254.31 to 254.45, Stats., this chapter or a condition of a license exists or has occurred may request an inspection by the department. The request shall be in writing, set forth the reasons for the request and be signed by the worker or workers' representative. The department shall provide a copy of the request to the licensee or registrant at the time of inspection granted under sub. (5). Upon request of the worker giving notice, the department shall remove from the licensee's or registrant's copy of the request the worker or workers' representative's name and the names of other individuals.

(b) No licensee, registrant, contractor or subcontractor of a licensee or registrant may discharge or in any manner discriminate against any worker or workers' representative because the worker or workers' representative has filed a complaint under this subsection or instituted or caused to be instituted a proceeding under this chapter or has testified or is about to testify in any proceeding under this chapter, or

Unofficial Text (See Printed Volume). Current through date and Register shown on Title Page.

because of the exercise by the worker on behalf of himself or herself or others of any right established under this subchapter.

Note: Requests may be made in writing to: Department of Health and Family Services, Radiation Protection Section, PO Box 2659, Madison WI 53701−2659.

(5) INSPECTION WARRANTED. If after reviewing a request submitted under sub. (4), the department determines it is probable an alleged violation has occurred, the department shall conduct an inspection as soon as is practicable. An inspection under this subsection need not be limited to an allegation set forth in a request under sub. (4).

(6) INSPECTION NOT WARRANTED. (a) If after reviewing a request submitted under sub. (4), the department decides not to conduct an inspection, the department shall notify the worker or workers' representative in writing of that determination.

(b) A worker or workers' representative may request a review of a decision under par. (a) by submitting a written request for review and statement of position to the department. The department shall send by certified mail to the licensee or registrant a copy of the statement of position received by the department under this paragraph.

(c) The licensee or registrant may submit to the department a written response to a statement of position submitted under par. (b). The department shall send by certified mail to the worker or workers' representative a copy of the response received by the department under this paragraph.

(d) Upon the request of the worker or workers' representative or the licensee or registrant, the department may hold an informal conference in which the worker or the workers' representative and the licensee or registrant may orally present their views on the reason for the initial request for inspection. Disclosure of the identity of the worker or the workers' representative may be made only following receipt of written authorization from the worker or the workers' representative. After considering all written and oral views presented, the department shall affirm, modify or reverse the original determination and furnish the worker or the workers' representative and the licensee or registrant a written notice of the decision and the reason for the decision.

Note: Requests may be made in writing to: Department of Health and Family Services, Radiation Protection Section, PO Box 2659, Madison WI 53701−2659.

History: CR 01−108: cr. Register July 2002 No. 559, eff. 8−1−02.

Subchapter XII — Enforcement

DHS 157.90 Violation and penalty criteria.

(1) SEVERITY LEVELS. (a) Each violation of a condition of a license or registration or a requirement of ss. 254.31 to 254.45, Stats., or this chapter shall be classified as specified in pars. (b) to (f) after considering all of the following:

1. The actual or potential injury to the environment or to occupational or public health.
2. The actual or potential costs of the damage or injury to the environment or to occupational or public health caused by the violation.
3. The potential danger to the environment or to occupational or public health.
4. The willfulness of the violation.
5. The compliance history of the licensee or registrant.

(b) A violation may be classified at severity level one if any of the following exist:

1. Actual damage or injury to occupational or public health or to the environment are caused by the violation.
2. The violation is characterized by any of the following:

a. Willful action.
b. Multiple occurrence between inspections.
c. Contribution to one or more additional violations.

(c) A violation may be classified at severity level 2 if both of the following exist:

1. The violation results in a circumstance that creates a significant potential for injury or costs to occupational or public health or to the environment.
2. Any of the factors listed in par. (b) 2. are present.

(d) A violation may be classified at severity level 3 if any of the following exist:

1. The potential for danger to the environment or occupational or public health is significant.
2. Any of the factors listed in par. (b) 2. b. and c. are present.

(e) A violation may be classified at severity level 4 if both of the following exist:

1. The violation threatens the environment or occupational or public health.

Unofficial Text (See Printed Volume). Current through date and Register shown on Title Page.

2. The potential for danger to the environment or occupational or public health is probable.
(f) A violation may be classified at severity level 5 if it is unlikely to cause actual costs or injury to the environment or to occupational or public health.
Note: See Appendix R for examples of severity levels one through 5 violations.
(2) ASSESSMENT OF FORFEITURES. (a) The department may assess a direct forfeiture for each violation. If the department assesses a forfeiture, the amount of the forfeiture shall be derived from Tables DHS 157.90A and 157.90B.
(b) A forfeiture assessment may not be less than $100 nor more than $100,000 for each violation.

Table DHS 157.90A
BASE FORFEITURES

Type of User	Amount
All licensees or registrants	$5,000
Persons not licensed or registered	$10,000

Table DHS 157.90B
PERCENTAGE OF BASE AMOUNTS BASED ON SEVERITY LEVEL OF VIOLATION

Severity Level	Percent of Amount Listed in Table 157.90A
1	100
2	75
3	50
4	15
5	5

(c) Each day of continued violation constitutes a separate offense.
(d) The department shall send written notice of a forfeiture assessment to the person against whom the forfeiture is assessed.
The notice shall specify all of the following:
1. The forfeiture amount.
2. The violation and severity level of the violation on which the forfeiture is based.
3. The statute or rule alleged to have been violated.
4. Notice that the person may contest the department's assessment of a forfeiture by requesting a hearing before the division of hearings and appeals. The notice shall describe the appeal process under s. DHS 157.91 (4).
(e) The department may, at any time, negotiate a settlement related to a violation.
(3) FORFEITURE PAYMENT. (a) A person against whom the department has assessed a forfeiture shall pay the forfeiture to the department within 10 days of the receipt of the notice under sub. (2) (d).
(b) Except as provided in par. (c), if a person contests a forfeiture under s. DHS 157.91 (4), and the division of hearings and appeals upholds the forfeiture assessment, the person shall pay the forfeiture within 10 days after receipt of the final decision after exhaustion of administrative review.
(c) If a person petitions for judicial review under ch. 227, Stats., and the court upholds the forfeiture assessment, the person shall pay the forfeiture within 10 days after receipt of the final judicial decision.
Note: Send forfeiture payments to: Department of Health and Family Services, Radiation Protection Section, P.O. Box 2659, Madison, WI 53701−2659. Certified mail may be sent to: Department of Health and Family Services, Radiation Protection Section, 1 West Wilson St., Room 150, Madison, WI 53702−0007.
(d) The department shall remit all forfeitures paid to the state treasurer for deposit in the school fund.
History: CR 01−108: cr. Register July 2002 No. 559, eff. 8−1−02.

DHS 157.91 Notices, orders, reviews and appeals.

(1) NOTICE OF VIOLATION AND ORDER OF ABATEMENT. (a) If the department finds that a source of radiation as constructed, operated or maintained results in a violation of ss. 254.31 to 254.45, Stats., or of this chapter, the department shall notify in writing, the person in control that is causing, allowing or permitting the violation as to the nature of the violation. The notification shall do all of the following:
1. Specify each statute, rule or condition of a license or registration alleged to have been violated and the severity level of each violation.

Unofficial Text (See Printed Volume). Current through date and Register shown on Title Page.

2. Order, that prior to a specified time, the person in control shall cease and abate causing, allowing or permitting the violation and take such action as may be necessary to have the source of radiation constructed, operated, or maintained in compliance with ch. 254, Stats., or this chapter.
3. Give notice of any forfeiture assessment.
4. Give notice that an order issued under this paragraph is subject to review by the department.
(b) If the department finds that a condition exists that constitutes an immediate threat, the department shall include in a notice of violation and order issued under par. (a), the recitation of the existence of the threat and the findings pertaining to the threat. The department may summarily cause the abatement of the violation.
(c) Upon receipt of a notice of violation and order under this subsection the person in control shall do all of the following:
1. Cease and abate the violation and take action as necessary to comply with ss. 254.31 to 254.45, Stats., or this chapter, before the time specified in the order.
2. Send to the department a written plan of correction for each violation, within 10 days after receipt of the notice of violation and order, that describes the action taken to comply with the order and the date within which the violation was corrected.
(d) The department shall, within a reasonable period after receipt of the plan of correction, inspect the source of radiation to ensure that the violation that is the subject of an order under this subsection is in compliance with ss. 254.31 to 254.45, Stats., and this chapter.
(e) The department may extend the period specified in par. (c) 2., for submission by the person in control of a plan of correction.
Note: A plan of correction should be sent to: Department of Health and Family Services, Radiation Protection Section, P.O. Box 2659, Madison, WI 53701−2659. Certified mail may be sent to: Department of Health and Family Services, Radiation Protection Section, 1 West Wilson St., Room 150, Madison, WI 53702−0007.
(2) PETITION FOR REVIEW. (a) A person to whom an order is issued under sub. (1) may petition the department for review of the order by submitting within 10 days after receipt of the department's order, to the administrator of the division of public health, a written petition for review. A petition for review shall include all of the following:
1. Name and address of the person filing the petition.
2. License number.
3. Reason for requesting the review.
4. Alternative solution.
5. Relief sought.
6. A copy of the notice of violation and order subject to review.
7. Written documentation in support of the petition for review.
Note: A petition for review should be sent to: Department of Health and Family Services, Radiation Protection Section, P.O. Box 2659, Madison, WI 53701−2659. Certified mail may be sent to: Department of Health and Family Services, Radiation Protection Section, 1 West Wilson St, Room 150, Madison, WI 53702−0007.
(b) Failure to petition the department for review as required
under par. (a) may result in a denial of the review.
(3) EMERGENCY ORDERS. (a) If the department finds that an emergency exists concerning a matter subject to regulation under ss. 254.31 to 254.45, Stats., or this chapter, that requires immediate action to protect the public health or safety, the department may issue an emergency order without hearing or notice. The order shall recite the existence of the emergency and state such action the department deems necessary to mitigate the emergency.
(b) An emergency order shall be issued within 24 hours of finding the emergency and shall be effective upon issuance. An emergency order shall remain in effect for up to 90 days after issuance, unless revoked or modified by the results of a hearing held under sub. (4). Any person to whom an emergency order is issued shall immediately comply with the order.
(c) A person to whom an emergency order is issued may contest the action by filing with the division of hearings and appeals, within 10 days after receipt of the emergency order, a written request for hearing under sub. (4).
(4) HEARING. (a) Any person against whom the department takes an action under sub. (3) or s. DHS 157.90 (2), may contest the action by sending to the division of hearings and appeals, within 10 days after receipt of the action, a written request for hearing under s. 227.44, Stats. The hearing request shall contain all of the following:
1. Name and address of the person filing the request.

Unofficial Text (See Printed Volume). Current through date and Register shown on Title Page.

2. The license number.
3. Reason for the hearing request.
4. Relief sought.
5. A copy of any notice issued by the department that is the subject of the action.

(b) Materials mailed to the division of hearings and appeals shall be considered filed with the division on the date of the postmark. Materials submitted by personal service or by inter−departmental mail shall be considered filed on the date the materials are received by the division. Materials transmitted by facsimile shall be considered filed on the date the materials are received by the division as recorded on the division facsimile machine.

Note: The mailing address of the Division of Hearings and Appeals is: 5005 University Avenue, Suite 201, Madison, WI 53705−5400. The facsimile transmission number is 608−267−2744.

(c) On the date a hearing request is sent to the division of hearings and appeals under par. (a), the petitioner shall send a copy of the hearing request to the department.

Note: A copy of the hearing request should be sent to: Department of Health and Family Services, Radiation Protection Section, P.O. Box 2659, Madison, WI 53701−2659. Certified mail may be sent to: Department of Health and Family Services, Radiation Protection Section, 1 West Wilson St, Room 150, Madison, WI 53702−0007.

(d) The division of hearings and appeals shall commence a hearing within 30 days of receipt of a request for hearing and issue a final decision within 15 days after the close of the hearing. Proceedings before the division shall be governed by ch. 227, Stats.

History: CR 01−108: cr. Register July 2002 No. 559, eff. 8−1−02.

Subchapter XIII — Transportation

DHS 157.92 General regulatory provisions.

(1) REQUIREMENT FOR LICENSE. No person may transport radioactive material or deliver radioactive material to a carrier for transport except as authorized in a general or specific license issued by the department under s. 254.365, Stats., or unless exempt under sub. (2).

(2) EXEMPTIONS. (a) Common and contract carriers, freight forwarders and warehouse workers who are subject to the requirements of 49 CFR 170 to 189 or the U.S. postal service regulations in the U.S. postal service domestic mail manual (DMM), Section C−023.9.0, and the U.S. postal service are exempt from the requirements of this section to the extent that they transport or store radioactive material in the regular course of their carriage for others or storage incident thereto. Common and contract carriers who are not subject to the requirements of the U.S. department of transportation or U.S. postal service are subject to sub. (1).

(b) A licensee is exempt from the requirements of this subchapter with respect to shipment or carriage of any of the following materials:

1. Naturally occurring radioactive material and ores containing naturally occurring radionuclides that are not intended to be processed for use of these radionuclides, provided the activity concentration of the material does not exceed 10 times the values specified in Appendix O, Table VII.
2. Materials for which the activity concentration is not greater than the activity concentration values specified in Appendix O, Table VII, or for which the consignment activity is not greater than the limit for an exempt consignment found in Appendix O, Table VII.

(c) Fissile materials meeting one of the following requirements are exempt from classification as fissile material and from the fissile material package standards of 10 CFR 71.55 and 10 CFR 71.59, but are subject to all other requirements of 10 CFR 71, except as noted:

1. Individual package containing 2 grams or less of fissile material.
2. Individual or bulk packaging containing 15 grams or less of fissile material provided the package has at least 200 grams of solid nonfissile material for every gram of fissile material. Lead, beryllium, graphite, and hydrogenous material enriched in deuterium may be present in the package but may not be included in determining the required mass for solid nonfissile material.
3. Low concentrations of solid fissile material commingled with solid nonfissile material, provided that there is at least 2000 grams of solid nonfissile material for every gram of fissile material and there is no more than 180 grams of fissile material distributed within 360 kg of contiguous nonfissile material. Lead, beryllium, graphite and hydrogenous material enriched in deuterium may be present in the package, but may not be included in determining the required mass of solid nonfissile material.
4. Uranium enriched in uranium−235 to a maximum of one percent by weight, and with total plutonium and uranium−233 content of up to one percent of the mass of uranium−235, provided that the mass of any

Unofficial Text (See Printed Volume). Current through date and Register shown on Title Page.

beryllium, graphite, and hydrogenous material enriched in deuterium present in the package is less than 5% of the uranium mass.
5. Liquid solutions of uranyl nitrate enriched in uranium−235 to a maximum of two percent by ~~weight~~ mass, provided that all the following conditions apply:
a. The total plutonium and uranium−233 content does not exceed 0.002 percent of the total mass of uranium.
b. The nitrogen to uranium atomic ratio (N/U) is greater than or equal to 2.0.
c. The material is contained in at least a U.S. department of transportation Type A package.
6. Plutonium with a total mass of less than 1000 grams, provided that: plutonium−239, plutonium−241, or any combination of these radionuclides, constitutes less than 20% by mass of the total quantity of plutonium in the package.
Note: The U.S. postal service domestic mail manual (DMM), Section C−023.9.0, is available at http://pe.usps.gov/.
(d) Any physician licensed by the state of Wisconsin to dispense drugs in the practice of medicine is exempt from sub. (1) with respect to transport by the physician of radioactive material for use in the practice of medicine provided the physician is an authorized user under subch. II of this chapter.
(3) TRANSPORT OF LICENSED MATERIAL. (a) A licensee who transports licensed material outside the site of usage, as specified in the department license, or on public highways, or who delivers licensed material to a carrier for transport, shall comply with the applicable requirements of the DOT regulations in 49 CFR parts 107, 171 to 180, and 390 to 397, appropriate to the mode of transport; and do all the following:
1. Comply with the requirements, appropriate to the mode of transport, of the regulations of the U.S. department of transportation in all the following areas:
a. Packaging – 49 CFR 173: Subparts A and B and I.
b. Marking and labeling − 49 CFR Part 172: Subpart D; and 172.400 to 172.407 and 172.436 to 172.441 of Subpart E.
c. Placarding – 49 CFR 172: Subpart F, especially 172.500 to 172.519, 172.556 and Appendices B and C.
d. Accident reporting − 49 CFR 171: 171.15 and 171.16.
e. Shipping papers and emergency information − 49 CFR 172: Subpart C and Subpart G.
f. Hazardous material employee training − 49 CFR 172: Subpart H.
g. Hazardous material shipper/carrier registration − 49 CFR 107: Subpart G.
h. Security Plans − 49 CFR 172: Subpart I.
2. Comply with U.S. department of transportation regulations pertaining to all the following modes of transportation:
a. Rail – 49 CFR 174: Subparts A to D and K.
b. Air − 49 CFR 175.
c. Vessel − 49 CFR 176: Subparts A to F and M.
d. Public Highway − 49 CFR 177 and 49 CFR 390 to 397.
3. Before delivery of a package to a carrier for transport, the licensee shall ensure that any special instructions needed to safely open the package have been sent to, or otherwise made available to, the consignee for the consignee's use under s. DHS 157.29 (6) (e).
(b) If the regulations of the U.S. department of transportation are not applicable to a shipment of licensed material, a licensee shall comply with the requirements of 49 CFR 107, 171 to 180, and 390 to 397, ~~170 to 189~~ appropriate to the mode of transport as if the shipment was subject to the regulations. A request for modification, waiver or exemption from these requirements and any notification referred to in these requirements shall be submitted in writing to the department.
Note: A request for modification, waiver or exemption shall be submitted to the department at the following address: Department of Health and Family Services, Radiation Protection Section, P.O. Box 2659, Madison, WI 53701−2659. Certified mail may be sent to: Department of Health and Family Services, Radiation Protection Section, 1 West Wilson St, Room 150, Madison, WI 53702−0007. Requests may be sent by facsimile to 608−267−3695.
History: CR 01−108: cr. Register July 2002 No. 559, eff. 8−1−02; **CR 06−021: r. and recr. (2) (b) to (d) and (3) (a) 3., am. (3) (a) (intro.) and 1. b., cr. (3) (a) 1. h. Register October 2006 No. 610, eff. 11−1−06**.

DHS 157.93 General licenses. (1) COMMON OR CONTRACT CARRIER. A general license is issued to any common or contract carrier not exempt under s. DHS 157.92 (2) to receive, possess, transport and store radioactive material in the regular course of their carriage for others or storage incident thereto, provided the transportation and storage is under the applicable requirements, appropriate to the mode of transport, of the U.S. department of transportation 49 CFR 170 to 189 relating to loading and storage of packages, placarding of the transporting vehicle and incident reporting. Notification of an incident shall be

Unofficial Text (See Printed Volume). Current through date and Register shown on Title Page.

filed with the department as prescribed in 49 CFR 170 to 189, in addition to notification made to the U.S. department of transportation or other agencies.

(2) PRIVATE CARRIER. A general license is issued to any private carrier to transport radioactive material, provided the transportation is under the applicable requirements, appropriate to the mode of transport, of the U.S. department of transportation insofar as the requirements relate to the loading and storage of packages, placarding of the transporting vehicle and incident reporting. Notification of an incident shall be filed with the department as prescribed in 49 CFR 170 to 189 in addition to notification made to the U.S. department of transportation or other agencies.

(3) EXEMPTION. A person who transports radioactive material under the general licenses in subs. (1) or (2) is exempt from the requirements of subchs. III and X only for the purposes of transporting radioactive material.

(4) NUCLEAR REGULATORY COMMISSION−APPROVED PACKAGES. (a) A general license is issued to any licensee to transport, or to deliver to a carrier for transport, licensed material in a package for which a license, certificate of compliance, or other approval has been issued by the nuclear regulatory commission.

(b) The general license issued in par. (a) applies only to a licensee who meets all the following criteria:

1. Has a copy of the specific license, certificate of compliance, or other approval by the nuclear regulatory commission of the package and has the drawings and other documents referenced in the approval relating to the use and maintenance of the packaging and to the actions to be taken prior to shipment.

2. Complies with the terms and conditions of the license, certificate, or other approval by the nuclear regulatory commission, as applicable, and the applicable requirements of this subsection.

3. Prior to the licensee's first use of the package, submits in writing to the nuclear regulatory commission the licensee's name and license number and the package identification number specified in the package approval. A licensee shall submit this information in accordance with 10 CFR 71.1 (a).

4. Has a quality assurance program that complies with subpart H of 10 CFR 71.

(c) The general license in par. (a) applies only when the package approval authorizes use of the package under this general license.

(d) For a Type B or fissile material package, the design of which was approved by the nuclear regulatory commission before April 1, 1996, the general license issued in par. (a) is subject to the additional restrictions of 10 CFR 71.19.

(5) US DEPARTMENT OF TRANSPORTATION SPECIFICATION CONTAINER. (a) A general license is issued to any licensee to transport, or to deliver to a carrier for transport, licensed material in a specification container for fissile material or for a Type B quantity of radioactive material as specified in 49 CFR Parts 173 and 178.

(b) The general license issued in par. (a) applies only to a licensee who meets all the following criteria:

1. Has a copy of the specification for the container.

2. Complies with the terms and conditions of the specification and the applicable requirements of this subchapter.

3. Has a quality assurance program that complies with 10 CFR 71, Subpart H.

(c) The general license issued in par. (a) is subject to the limitation that the specification container may not be used for a shipment to a location outside the United States except by multilateral approval as defined in 49 CFR 173.403.

(d) The general license issued in par. (a) is subject to the limitation specified in 10 CFR 71.20 (e).

(6) USE OF FOREIGN APPROVED PACKAGE. (a) A general license is issued to any licensee to transport, or to deliver to a carrier for transport, licensed material in a package whose design has been approved in a foreign national competent authority certificate and which has been revalidated by the US department of transportation as meeting the applicable requirements of 49 CFR 171.12.

(b) The general license in par. (a) applies only to international shipments.

(c) The general license in par. (a) applies only to a licensee who meet all the following criteria:

1. Has a copy of the applicable certificate, the revalidation, and the drawings and other documents referenced in the certificate relating to the use and maintenance of the packaging and to the actions to be taken prior to shipment.

2. Complies with the terms and conditions of the certificate and revalidation, and with the requirements of 10 CFR 71 Subparts A, G and H.

3. Has a quality assurance program approved by the nuclear regulatory commission.

Unofficial Text (See Printed Volume). Current through date and Register shown on Title Page.

(7) FISSILE MATERIAL. (a) A general license is hereby issued to any licensee to transport fissile material, or to deliver fissile material to a carrier for transport, if the material is shipped under this subsection. The fissile material need not be contained in a package which meets the standards of subparts E and F of 10 CFR 71; however, the material shall be contained in a Type A package. The Type A package shall also meet the U.S. department of transportation requirements of 49 CFR 173.417(a).
(b) The general license applies only to a licensee who has a quality assurance program approved by the NRC as satisfying the provision of subpart H of 10 CFR 71.
(c) The general license applies only when a package's contents meet all the following criteria:
1. Contains no more than a Type A quantity of radioactive material.
2. Contain less than 500 total grams of beryllium, graphite, or hydrogenous material enriched in deuterium.
(d) The general license applies only to a package containing fissile material that is labeled with a CSI and meets all the following criteria:
1. Has been determined in accordance with par. (e).
2. Has a value less than or equal to 10.0.
3. For a shipment of multiple packages containing fissile material, the sum of the CSIs shall be less than or equal to 50 for shipment on a nonexclusive use conveyance and less than or equal to 100 for shipment on an exclusive use conveyance.
(e) The value for the CSI shall be greater than or equal to the number calculated by the following equation:

$$CSI = 10\left[\frac{grams\ of\ ^{235}U}{X} + \frac{grams\ of\ ^{233}U}{Y} + \frac{grams\ of\ Pu}{Z}\right]$$

1. The calculated CSI shall be rounded up to the first decimal place.
2. The values of X, Y, and Z used in the CSI equation shall be taken from Table DHS 157.93A or Table DHS 157.93B, as appropriate.
3. If Table DHS 157.93B is used to obtain the value of X, then the values for the terms in the equation for uranium−233 and plutonium shall be assumed to be zero.
4. Table DHS 157.93A values for X, Y, and Z shall be used to determine the CSI under any of the following conditions:
a. Uranium−233 is present in the package.
b. The mass of plutonium exceeds one percent of the mass of uranium−235.
c. The uranium is of unknown uranium−235 enrichment or greater than 24 weight percent enrichment.
d. Substances having a moderating effectiveness (i.e., an average hydrogen density greater than H_2O) (e.g., certain hydrocarbon oils or plastics) are present in any form, except as polyethylene used for packing or wrapping.

TABLE DHS 157.93A
Mass Limits For General License Packages Containing Mixed Quantities Of Fissile Material Or Uranium−235 Of Unknown Enrichment per s. DHS 157.93 (7) (e).

Fissile Material	**Fissile material mass mixed with moderating substances having an average hydrogen density less than or equal to H_2O (grams)**	**Fissile material mass mixed with moderating substances having an average hydrogen density greater than H_2O[a] (grams)**
^{235}U (X)	60	38
^{233}U (Y)	43	27
^{239}Pu or ^{241}Pu (Z)	37	24

[a] When mixtures of moderating substances are present, the lower mass limits shall be used if more than 15% of the moderating substance has an average hydrogen density greater than H_2O.

Unofficial Text (See Printed Volume). Current through date and Register shown on Title Page.

TABLE DHS 157.93B
Mass Limits For General License Packages Containing
Uranium−235 Of Known Enrichment
per s. DHS 157.93 (7) (e)

Uranium enrichment in weight percent of U−235 not exceeding	**Fissile material mass of U−235 (X) (grams)**
24	60
20	63
15	67
11	72
10	76
9.5	78
9	81
8.5	82
8	85
7.5	88
7	90
6.5	93
6	97
5.5	102
5	108
4.5	114
4	120
3.5	132
3	150
2.5	180
2	246
1.5	408
1.35	480
1	1020
0.92	1800

(8) PLUTONIUM−BERYLLIUM SPECIAL FORM MATERIAL. (a) A general license is issued to any licensee to transport fissile material in the form of plutonium−beryllium (Pu−Be) special form sealed sources, or to deliver Pu−Be sealed sources to a carrier for transport, if the material is shipped under this subsection. This material need not be contained in a package which meets the standards of subparts E and F of 10 CFR 71; however, the material must be contained in a Type A package. The Type A package must also meet the U.S. department of transportation requirements of 49 CFR 173.417(a).
(b) The general license applies only to a licensee who has a quality assurance program approved by the nuclear regulatory commission as satisfying the provision of subpart H of 10 CFR 71. (c) The general license applies when a package's contents meets all the following criteria:
1. Contain less than a Type A quantity of material.
2. Contain less than 1000 grams of plutonium, provided that: plutonium−239, plutonium−241, or any combination of these radionuclides, constitutes less than 240 grams of the total quantity of plutonium in the package.
(d) The general license applies only to packages labeled with a CSI which meets all the following criteria:
1. Has been determined in accordance with par. (e).
2. Has a value less than or equal to 100.

Unofficial Text (See Printed Volume). Current through date and Register shown on Title Page.

3. For a shipment of multiple packages containing Pu−Be sealed sources, the sum of the CSIs shall be less than or equal to 50 for shipment on a nonexclusive use conveyance and to less than or equal to 100 for shipment on an exclusive use conveyance.
(e) The value for the CSI shall be greater than or equal to the number calculated by the following equation and the calculated CSI rounded up to the first decimal place:

$$CSI = 10\left[\frac{grams\ of\ \ Pu-231 + grams\ of\ \ Pu-241}{24}\right]$$

History: CR 01−108: cr. Register July 2002 No. 559, eff. 8−1−02; **CR 06−021: am. (4) (b) 3., 4. and (d), r. (5), renum. (6) and (7) to be (5) and (6) and am. (5) (b) 3. and (6) (c) 2., cr. (5) (d), (7) and (8) Register October 2006 No. 610, eff. 11−1−06**.

DHS 157.94 Operating controls and procedures. (1) ROUTINE DETERMINATIONS. Prior to each shipment of licensed material, a licensee shall determine all the following:
(a) The package is proper for the contents to be shipped.
(b) The package is in unimpaired physical condition except for superficial defects such as marks or dents.
(c) Each closure device of the packaging, including any required gasket, is properly installed and secured and free of defects.
(d) Any system for containing liquid is adequately sealed and has adequate space or other specified provision for expansion of the liquid.
(e) Any pressure relief device is operable and set under written procedures established by the carrier or licensee.
(f) The package has been loaded and closed under written procedures established by the carrier or licensee.
(g) For fissile material, any moderator or neutron absorber, if required, is present and in proper condition.
(h) Any structural part of the package that may be used to lift or tie down a package during transport is rendered inoperable unless it satisfies design requirements specified by the NRC.
(i) The level of removable radioactive contamination on the external surfaces of each package offered for shipment is as low as reasonably achievable and does not exceed the levels specified in 49 CFR 173.443.
(j) External radiation levels around the package and around the vehicle do not exceed the limits specified in 49 CFR 173.441.
(k) Accessible package surface temperatures will not exceed the limits specified in 10 CFR 71.43(g) at any time during transportation.
(2) AIR TRANSPORT OF PLUTONIUM. Notwithstanding the provisions of any general licenses and notwithstanding any exemptions stated directly in this section or included indirectly by citation of the U.S. department of transportation regulations, a licensee may not transport or deliver plutonium in any form by air, or deliver to a carrier for air transport, except under any of the following conditions:
(a) The plutonium is contained in a medical device designed for individual human application.
(b) The plutonium is contained in a material in which the specific activity is less than or equal to the activity concentration values for plutonium specified in Appendix O, Table VII and in which the radioactivity is essentially uniformly distributed.
(c) The plutonium is shipped in a single package containing no more than an A2 quantity of plutonium in any isotope or form and is shipped as provided in s. DHS 157.92 (3).
(d) The plutonium is shipped in a package specifically authorized in a certificate of compliance issued by the nuclear regulatory commission for the shipment of plutonium by air, and the licensee requires, through special arrangement with the carrier, compliance with 49 CFR 175.704.
(3) SHIPMENT RECORDS. A licensee shall maintain for a period of 3 years after shipment a record of each shipment of licensed material not exempt under s. DHS 157.92 (2), showing all of the following:
(a) Identification of the packaging by model number and serial number.
(b) Verification that the packaging, as shipped, had no significant defect.
(c) Volume and identification of coolant.
(d) Type and quantity of licensed material in each package and the total quantity of each shipment.
(e) Date of the shipment.
(f) Name and address of the transferee.
(g) Address to which the shipment was made.
(h) Results of the determinations required by sub. (1) and by the conditions of the package approval.
Note: The approval of packaging and the conditions or limitations of that approval are reserved solely to the NRC.

Unofficial Text (See Printed Volume). Current through date and Register shown on Title Page.

(4) REPORTS. A licensee shall provide a written report to the department within 30 days of any of the following:
(a) Any instance in which there is significant reduction in the effectiveness of any packaging during use.
(b) Details of any defects with safety significance in the packaging after first use, and the means employed to repair the defects and prevent their recurrence.
(c) Instances in which the conditions of approval in the certificate of compliance were not observed in making a shipment.
(5) ADVANCE NOTIFICATION OF TRANSPORT OF NUCLEAR WASTE. (a) Prior to the transport of any nuclear waste meeting the criteria in par. (b) outside of the confines of the licensee's facility or other place of use or storage, or prior to the delivery of any nuclear waste to a carrier for transport, each licensee shall provide advance notification of the transport to the governor, or governor's designee, and to the department.
Note: Notification of transport of nuclear waste may be sent to: Division of Emergency Management, 2400 Wright Street, Madison, Wisconsin, 53704. Notification may also be made by: telephone at 608−242−3232; or fax at 608−242−3247. The telephone number of the 24−hour duty officer is 1−800−943−0003.
(b) Advance notification is required under any of the following conditions:
1. The nuclear waste is required to be in Type B packaging for transportation.
2. The nuclear waste is being transported through Wisconsin en route to a disposal facility or to a collection point for transport to a disposal facility.
3. The quantity of licensed material in a single package exceeds any of the following criteria:
a. Three thousand times the A1 value of the radionuclides as specified in Appendix O, Table VI for special form radioactive material.
b. Three thousand times the A2 value of the radionuclides as specified in Appendix O, Table VI for normal form radioactive material.
c. One thousand terabecquerel (27,000 Ci).
(c) Each advance notification required by par. (a) shall contain all the following information:
1. The name, address and telephone number of the shipper, carrier and receiver of the shipment.
2. A description of the nuclear waste contained in the shipment as required under 49 CFR 172.202 and 172.203.
3. The point of origin of the shipment and the 7−day period during which departure of the shipment is estimated to occur.
4. The 7−day period during which arrival of the shipment at state boundaries is estimated to occur.
5. The destination of the shipment and the 7−day period during which arrival of the shipment is estimated to occur.
6. A point of contact with a telephone number for current shipment information.
(d) The notification required by par. (a) shall be made in writing to the office of the governor, or governor's designee, and to the department. A notification delivered by mail must be postmarked at least 7 days before the beginning of the 7−day period during which departure of the shipment is estimated to occur. A notification delivered by messenger or facsimile shall reach the office of the governor, or governor's designee, and the department at least 4 days before the beginning of the 7−day period during which departure of the shipment is estimated to occur. A copy of the notificationshall be retained by the licensee for 3 years.
(e) A licensee shall notify the governor, or governor's designee, and the department of any changes to schedule information provided under par. (a). Notification shall be by telephone or facsimile to a designated responsible individual in the office of the governor, or governor's designee, and to the department. A licensee shall retain for 3 years a record of the name of the individual contacted.
(f) A licensee who cancels a nuclear waste shipment for which advance notification has been sent shall send to the governor, or governor's designee, and to the department a cancellation notice identifying the advance notification that is being canceled. A copy of the notice shall be retained by the licensee for 3 years.
(6) QUALITY ASSURANCE REQUIREMENTS. (a) Unless exempted by the department, a licensee shall establish, maintain and execute a quality assurance program to verify that deficiencies, deviations and defective material and equipment relating to the shipment of packages containing radioactive material are promptly identified and corrected.
(b) A licensee shall identify the material and components to be covered by the quality assurance program.

Unofficial Text (See Printed Volume). Current through date and Register shown on Title Page.

(c) A licensee shall document the quality assurance program by written procedures or instructions and shall carry out the program under those procedures throughout the period during which packaging is used.
(d) Prior to the use of any package for the shipment of radioactive material, a licensee shall obtain approval of its quality assurance program from the department.
(e) A licensee shall maintain written records to demonstrate compliance with the quality assurance program. Records of quality assurance pertaining to the use of a package for shipment of radioactive material shall be retained for a period of 3 years after shipment.
(7) ASSUMPTIONS AS TO UNKNOWN PROPERTIES OF FISSILE MATERIAL. When the isotopic abundance, mass, concentration, degree of irradiation, degree of moderation, or other pertinent property of fissile material in any package is not known, the licensee shall package the fissile material as if the unknown properties have credible values that will cause the maximum neutron multiplication.
(8) PRELIMINARY DETERMINATIONS. Prior to the first use of any packaging for the shipment of radioactive material a licensee shall do all the following:
(a) Ascertain that there are no defects that could significantly reduce the effectiveness of the packaging.
(b) Where the maximum normal operating pressure will exceed 35 kilopascal (5 lb/in^2) gauge, test the containment system at an internal pressure at least 50% higher than the maximum normal operating pressure to verify the capability of that system to maintain its structural integrity at that pressure.
(c) Determine that the packaging has been fabricated in accordance with the design approved by the nuclear regulatory commission.
(d) Conspicuously and durably mark the packaging with its model number, serial number, gross weight, and a package identification number as assigned by the nuclear regulatory commission.
History: CR 01−108: cr. Register July 2002 No. 559, eff. 8−1−02; **CR 06−021: am. (2) (b) Register October 2006 No. 610, eff. 11−1−06**.

Subchapter XIV — Radioactivity in Community Water Systems

DHS 157.95 Exemptions. A community water system is exempt from the provisions of this subchapter if all of the following apply:
(1) The community water system consists solely of distribution and storage facilities.
(2) The community water system does not include collection and treatment facilities.
(3) The community water system obtains all water from, but is not owned or operated by, a public water system to which the rules of this subchapter apply.
(4) The community water system does not sell water to any person.
(5) The community water system is not a carrier that conveys passengers in interstate commerce.
History: CR 01−108: cr. Register July 2002 No. 559, eff. 8−1−02.

DHS 157.96 Requirements. (1) MAXIMUM CONTAMINANT LEVELS. (a) *Alpha activity.*
1. The maximum contaminant level for radium−226 and radium−228 in community water systems is 5 pCi/L.
2. The maximum contaminant level for gross alpha particle activity in community water systems is15 pCi/L, including radium−226, but excluding radon and uranium.
(b) *Beta particle and photon radioactivity from man−made radionuclides in community water systems.*
1. The average annual concentration of beta particle and photon radioactivity from man−made radionuclides in drinking water may not produce an annual dose equivalent to the total body or any internal organ greater than 0.04 millisievert (4 millirem).
2. Except for the radionuclides listed in Table DHS 157.96A, the concentration of man−made radionuclides causing 0.04 millisievert (4 millirem) total body or organ dose equivalents shall becalculated on the basis of a 2−liter per day drinking water intake using the 168 hour data listed in "Maximum Permissible Body Burdens and Maximum Permissible Concentrations of Radionuclides in Air or Water for Occupational Exposure", National Council on Radiation Protection and Measurements Report No. 22. If 2 or more radionuclides are present, the sum of their annual dose equivalent to the total body or to any organ may not exceed 0.04 millisievert (4 millirem).
Note: The publication "Maximum Permissible Body Burdens and Maximum Permissible Concentrations of Radionuclides in Air or Water for Occupational Exposure" in the National Council on Radiation Protection and Measurements Report No. 22, is the same document as Handbook 69 published by the National Bureau of Standards and which the Department received permission from the Attorney General and the Legislative Reference on March 22, 1982 to incorporate into ch. HSS 157 by reference. The reference is no longer available through the federal government and the National Bureau of Standards no longer exists. However, the document may be consulted at the Department's Radiation Protection Section at 1 W. Wilson St. in Madison, WI or the Legislative Reference Bureau or the Secretary of State's Office and may be ordered from: NCRP, 7910 Woodmont Avenue, Suite 800, Bethesda MD, 20814.

Unofficial Text (See Printed Volume). Current through date and Register shown on Title Page.

TABLE DHS 157.96A
AVERAGE ANNUAL CONCENTRATIONS ASSUMED TO PRODUCE A TOTAL BODY OR ORGAN DOSE OF 0.04 MILLISIEVERT (4 MILLIREM)/YEAR

Radionuclide	Critical Organ	pCi per liter
Tritium	Total body	20,000
Strontium−90	Bone marrow	8

(2) ANALYTICAL METHODS FOR RADIOACTIVITY IN WATER. (a) *Standard radionuclide.* The following methods used to measure radionuclides and specified in "Prescribed Procedures for Measurement of Radioactivity in Drinking Water" EPA−600/4−80−032 shall be used to determine compliance with sub. (1), except in cases where alternative methods have been approved under sub. (4):

1. Gross Alpha and Beta − Method 900.
2. Gross Radium Alpha – Method 900.1.
3. Radium−226 – Method 903.1.
4. Radioactive Strontium Method 905.
5. Tritium – Method 906.
6. Radioactive Cesium Method 901.
7. Uranium – Method 908 or 908.1.

Note: The publication "Prescribed Procedures for Measurement of Radioactivity in Drinking Water," EPA−600 4−80−32, is on file in the Legislative Reference Bureau and the Secretary of State's Office and is available on−line at http://www.epa. gov/safewater/methods/rads.html.

(b) *Other radionuclides.* When the identification and measurement of radionuclides other than those listed in par. (a) is required, the following references shall be used, except in cases where alternative methods have been approved under sub. (4):

1. Procedures for Radiochemical Analysis of Nuclear Reactor Aqueous Solutions, H. L. Krieger and S. Gold, EPA− R4−73−014, May 1973.
2. Section 4.5.4 of the Health and Safety Laboratory Procedure Manual pertaining to testing water, ERDA−HASL 300, 28th Edition.

Note: 1. The Procedures for Radiochemical Analysis of Nuclear Reactor Aqueous Solutions, H. L. Krieger and S. Gold, EPA−R4−73−014, May 1973, is available upon written request to: Department of Health and Family Services, Radiation Protection Section, PO Box 2659, Madison WI 53701−2659.
2. The Health and Safety Laboratory Procedure Manual ERDA−HASL 300, 28th Edition, 1997, is available on−line at www.eml.doe.gov/publications/procman/ or by ordering from: The Environmental Measurements Laboratory (EML), 201 Varick St, NY,NY 10014−4811.

(c) *Sensitivity.*

1. For the purpose of monitoring radioactivity concentrations in drinking water, the required sensitivity of the radioanalysis is defined in terms of a detection limit. The detection limit shall be that concentration that may be counted with a precision of plus or minus 100% at the 95% confidence level, where 1.96 is the standard deviation of the net counting rate of the sample.
2. To determine compliance with sub. (1) (a) 1., the detection limit may not exceed one pCi/L. To determine compliance with sub. (1) (a) 2., the detection limit may not exceed 3 pCi/L.
3. To determine compliance with sub. (1) (b), the detection limits may not exceed the concentrations listed in Table DHS 157.96B.

TABLE DHS 157.96B
DETECTION LIMITS FOR MAN−MADE BETA PARTICLE AND PHOTON EMITTERS

Radionuclide	Detection Limit
Tritium	1,000 pCi/L
Strontium−89	10 pCi/L
Strontium−90	2 pCi/L
Iodine−131	1 pCi/L
Cesium−134	10 pCi/L
Gross beta	4 pCi/L
Other radionuclides	1/10 of the applicable limit

Unofficial Text (See Printed Volume). Current through date and Register shown on Title Page.

(d) *Compliance.* To judge compliance with the maximum contaminant levels listed in sub. (1), averages of data shall be used and shall be rounded to the same number of significant figures as the maximum contaminant level for the substance in question.

(3) MONITORING FREQUENCY IN COMMUNITY WATER SYSTEMS. (a) *Monitoring requirements for gross alpha particle activity, radium−226 and radium−228.*

1. Compliance with sub. (1) (a) shall be based on the analysis of an annual composite of 4 consecutive quarterly samples or the average of the analyses of 4 samples obtained at quarterly intervals.

a. A gross alpha particle activity measurement may be substituted for the required radium−226 and radium−228 analyses provided that the measured gross alpha particle activity does not exceed 5 pCi/L at a confidence level of 95%, where 1.96 is the standard deviation of the net counting rate of the sample. In localities where radium−228 may be present in drinking water, the department may require radium−226 or radium−228 analyses or analyses of both when the gross alpha particle activity exceeds 2 pCi/L.

b. When the gross alpha particle activity exceeds 5 pCi/L, the same or an equivalent sample shall be analyzed for radium−228.

2. A supplier of water shall monitor water supplies at least once every 4 years following the procedure required by subd. 1. At the discretion of the department, when the record taken in conformance with subd. 1. establishes that the average annual concentration is less than half the maximum contaminant levels established by sub. (1) (a), analysis of a single sample may be substituted for the quarterly sampling procedure required by subd. 1.

a. When ordered by the department, more frequent monitoring shall be conducted in the vicinity of mining or other operations that may contribute alpha particle radioactivity to either surface or groundwater sources of drinking water.

b. A supplier of water shall monitor in conformance with subd. 1. within one year of the introduction of a new water source for a community water system. More frequent monitoring shall be conducted when ordered by the department if possible contamination or changes in the distribution system or treatment processing occur that may increase the concentration of radioactivity in finished water.

c. A community water system using 2 or more sources having different concentrations of radioactivity shall monitor source water and water from a free−flowing tap when required by the department.

d. Monitoring for compliance with sub. (2) (a) need not include radium−228 except when required by the department, provided that the average annual concentration of radium−228 has been assayed at least once using the quarterly sampling procedure required by subd. 1.

e. A supplier of water shall conduct annual monitoring of any community water system in which the radium−226 concentration exceeds 3 pCi/L, when required by the department.

3. If the average annual maximum contaminant level for gross alpha particle activity or total radium as set forth in sub. (1) (a) is exceeded, the supplier of a community water system shall give notice to the department under sub. (7) and notify the public as required by sub. (8). Monitoring at quarterly intervals shall be continued until the annual average concentration no longer exceeds the maximum contaminant level or until a monitoring schedule as a condition to a variance, exemption or enforcement action is no longer in effect.

(b) *Monitoring requirements for man−made radioactivity in community water systems.*

1. Community water systems using surface water sources and serving more than 100,000 persons and any other community water systems as are designated by the department shall be monitored for compliance with sub. (1) (b) by analysis of a composite of 4 consecutive quarterly samples or analysis of 4 quarterly samples. Compliance with sub. (1) (b) may be assumed without further analysis if the average annual concentration of gross beta particle activity is less than 50 pCi/L and if the average annual concentrations of tritium and strontium−90 are less than those listed in Table 157.96A, provided that if both radionuclides are present, the sum of their annual dose equivalents to bone marrow does not exceed 4 millirem.

a. If the gross beta particle activity exceeds 50 pCi/L, an analysis of the sample shall be performed to identify the major radioactive constituents present. The appropriate organ and total body doses shall be calculated to determine compliance with sub. (1) (b).

b. A supplier of water shall conduct additional monitoring, as required by the department, to determine the concentration of man−made radioactivity in principal watersheds designated by the department.

c. At the discretion of the department, a supplier of water utilizing only groundwaters may be required to monitor for man−made radioactivity.

Unofficial Text (See Printed Volume). Current through date and Register shown on Title Page.

2. After the initial analysis required by subd. 1., a supplier of water shall monitor at least every 4 years following the procedure given in subd. 1.
3. The supplier of any community water system designated by the department as utilizing water subject to contamination by effluents from nuclear facilities shall initiate quarterly monitoring for gross beta particle and iodine−131 radioactivity and annual monitoring for strontium−90 and tritium.
a. Quarterly monitoring for gross beta particle activity shall be based on the analysis of monthly samples or the analysis of a composite of 3 monthly samples. If the gross beta particle activity exceeds 50 pCi/L, an analysis of the sample shall be performed to identify the major radioactive constituents present and the appropriate organ and total body doses shall be calculated to determine compliance with sub. (1) (b).
b. For iodine−131, a composite of 5 consecutive daily samples shall be analyzed once each calendar quarter. As required by the department, more frequent monitoring shall be conducted when iodine−131 is identified in the finished water.
c. Annual monitoring for strontium−90 and tritium shall be conducted by means of the analysis of a composite of 4 consecutive quarterly samples or analysis of 4 quarterly samples.
d. Data obtained by the direct monitoring of water supplies in the areas surrounding nuclear facilities may be utilized by the supplier where the department determines such data is applicable to a particular community water system.
4. If the average annual maximum contaminant level for man−made radioactivity specified in sub. (1) (b) is exceeded, the operator of a community water system shall give notice to the department under sub. (7) and to the public as required by sub. (8). Monitoring at monthly intervals shall be continued until the concentration no longer exceeds the maximum contaminant level or until a monitoring schedule as a condition to a variance, exemption or enforcement action becomes effective.
(4) ALTERNATIVE ANALYTICAL TECHNIQUES. With the written permission of the department concurred in by the administrator of the U.S. environmental protection agency, an alternative analytical technique may be employed. An alternative technique shall be acceptable only if it is substantially equivalent to the prescribed test in sub. (1) in both precision and accuracy as it relates to the determination of compliance with any maximum contaminant level. The use of the alternative analytical technique may not decrease the frequency of monitoring required by sub. (3).
(5) APPROVED LABORATORIES. For the purpose of determining compliance with this section, samples shall be considered only if the samples have been analyzed by a laboratory approved by the department.
(6) MONITORING OF CONSECUTIVE PUBLIC WATER SYSTEMS. When a public water system supplies water to one or more other public water systems, the department of natural resources may modify the monitoring requirements imposed by this section if the interconnection of the systems justifies treating them as a single system for monitoring purposes. Any modified monitoring shall be conducted under a schedule specified by the department of natural resources and concurred in by the administrator of the U.S. environmental protection agency.
(7) REPORTING REQUIREMENTS. (a) *Routine reports.* Except where a shorter reporting period is specified in this section, a supplier of water shall report the results of a test, measurement or analysis required to be made under this section to the department within 40 days following the test, measurement or analysis.
(b) *Noncompliance reporting.* A supplier of water shall report to the department within 48 hours noncompliance with any provision of this section, including failure to comply with monitoring requirements.
(c) *Exceptions.* A supplier of water is not required to report analytical results to the department when the department performs the analysis.
(8) PUBLIC NOTIFICATION. Public notification shall be provided as prescribed in s. NR 809.81.
Note: NR 809.81 is repealed eff. 11−1−02.
(9) RECORD MAINTENANCE. A supplier of water shall maintain records as prescribed in s. NR 809.82.
(10) VARIANCE AND EXEMPTIONS. Variances and exemptions may be granted from any requirement regarding a maximum contaminant level for radioactivity as prescribed in ss. NR 809.90 and 809.91.
History: CR 01−108: cr. Register July 2002 No. 559, eff. 8−1−02. **DHS 157.97 Exemptions. History:** CR 01−108: cr. Register July 2002 No. 559, eff. 8−1−02**; CR 06−021: r. Register October 2006 No. 610, eff. 11−1−06. DHS 157.98 Registration. History:** CR 01−108: cr. Register July 2002 No. 559, eff. 8−1−02**; CR 06−021: r. Register October 2006 No. 610, eff. 11−1−06.**