10 CFR 50.55a

A subsidiary of Pinnacle West Capital Corporation

Palo Verde Nuclear Generating Station

Dwight C. Mims
Vice President
Regulatory Affairs and Plant Improvement

Tel. 623-393-5403
Fax 623-393-6077

Mail Station 7605
P. O. Box 52034
Phoenix, Arizona 85072-2034

102-06045-DCM/SAB/RJR
August 07, 2009

ATTN: Document Control Desk
U.S. Nuclear Regulatory Commission
Washington, DC 20555-0001

Dear Sirs:

Subject: Palo Verde Nuclear Generating Station (PVNGS)
Units 1, 2, and 3
Response to Request for Additional Information
Relief Request No. 36, Revision 1

By letter no. 102-06014, dated June 04, 2009 (Agencywide Document Access and Management System [ADAMS] Accession No. ML091630062), Arizona Public Service Company (APS) submitted to the NRC Relief Request No. 36, Revision 1. Enclosure 1 contains APS responses to the NRC questions provided by the NRC Project Manager on July 10, 2009. Enclosure 2 contains Relief Request 36, Revision 1, updated to reflect the changes described in Enclosure 1.

As described herein, APS commits to:

1. Provide the information delineated in question 9 to the NRC Project Manager within 14 days after the completion of the ultrasonic examination of the weld overlay installations.

2. Submit a summary report of the results of the ASME III and ASME XI analyses that demonstrates the full structural weld overlay applications will perform their intended design function. The report will be submitted prior to Mode 4 entry following the outage in which the weld overlays are applied.

A047
NRR

APS has recently decided to inspect the dissimilar metal welds during the upcoming fall outage. As a result, this relief will not be needed for the Fall 2009 outage, as originally requested, but is requested by March 20, 2010, to support the Unit 1 refueling outage.

Should you need further information regarding this relief request, please contact Russell A. Stroud, Licensing Section Leader, at (623)393-5111.

Sincerely,

Scott Bauer for DCM

DCM//RAS/RJR/gat

Enclosures: 1 Response to Request for Additional Information Relief Request No. 36, Revision 1
2 Relief Request 36, Revision 1, Updated to Reflect the Changes Described in Enclosure 1.

cc:	E. E. Collins, Jr.	NRC Region IV Regional Administrator
	J. R. Hall	NRC NRR Project Manager
	R. I. Treadway	NRC Senior Resident Inspector for PVNGS

ENCLOSURE 1

Response to Request for Additional Information
Relief Request No. 36, Revision 1

RESPONSE TO REQUEST FOR ADDITIONAL INFORMATION
RELIEF REQUEST 36, REVISION 1

By letter dated June 4, 2009, Arizona Public Service Company (APS) submitted Relief Request 36, Revision 1, as an alternative to certain requirements of Section XI of the American Society of Mechanical Engineers (ASME) Boiler and Pressure Vessel Code. Relief Request 36, Revision 1, proposes to use full structural weld overlays (FSWOL) to preemptively repair Alloy 82/182 dissimilar metal welds (DMWs) at various cold leg nozzles at Palo Verde Nuclear Generating Station, Units 1, 2, and 3. During the review of the proposed revision to Relief Request 36 by the Nuclear Regulatory Commission (NRC), the staff requested the following additional information on July 10, 2009.

NRC Question 1

Section 1.0 of Relief Request 36, Revision 1, lists the affected Alloy 82/182 DMWs. The licensee stated that it will not ultrasonically examine the subject DMWs prior to weld overlay installation. Discuss the inspection history, including examination results, of the subject DMWs.

APS Response

The following tables show the examinations completed on each weld during the first and second inservice inspection intervals. During the second inservice inspection interval, some 14" diameter welds did not receive UT or PT and some 2-inch and 3-inch welds did not receive PT due to implementation of a risk informed program (Relief Request 32). There have been no examinations conducted on these welds during the third inservice inspection interval. No flaw indications have been identified by the subject examinations.

UT = ultrasonic examination PT = dye penetrant examination VT = visual examination

U-1	Description	Zone	Size	DM Weld Item #	1st Interval Examination Method	2nd Interval Examination Method
Cold Leg	SI 1A nozzle-to-safe end	23	14	9-10	UT/PT	UT/PT/VT
Cold Leg	SI 1B nozzle-to-safe end	24	14	11-10	UT/PT	UT/VT
Cold Leg	SI 2A nozzle-to-safe end	25	14	13-10	UT/PT	VT
Cold Leg	SI 2B nozzle-to-safe end	26	14	15-9	UT/PT	UT/VT
Cold Leg	PZR Spray 1A nozzle-to-safe end	27	3	9-11	UT/PT	PT/VT
Cold Leg	PZR Spray 1B nozzle-to-safe end	28	3	11-11	PT	VT
Cold Leg	Drain Line 1A nozzle-to-safe end	32	2	8-18	PT	PT/VT
Cold Leg	Drain Line 1B nozzle-to-safe end	33	2	10-18	PT	PT/VT
Cold Leg	Drain Line 2A nozzle-to-safe end	34	2	12-18	PT	VT
Cold Leg	Letdown Line nozzle-to-safe end	36	2	14-18	PT	VT
Cold Leg	Charging Line nozzle-to-safe end	37	2	13-11	PT	PT/VT

U-2	Description	Zone	Size	DM Weld Item Number	1st Interval Examination Method	2nd Interval Examination Method
Cold Leg	SI 1A nozzle-to-safe end	23	14	9-10	UT/PT	UT/PT/VT
Cold Leg	SI 1B nozzle-to-safe end	24	14	11-10	UT/PT	UT/VT
Cold Leg	SI 2A nozzle-to-safe end	25	14	13-10	UT/PT	UT/VT
Cold Leg	SI 2B nozzle-to-safe end	26	14	15-9	UT/PT	UT/VT
Cold Leg	PZR Spray 1A nozzle-to-safe end	27	3	9-11	UT/PT	PT/VT
Cold Leg	PZR Spray 1B nozzle-to-safe end	28	3	11-11	PT	PT/VT
Cold Leg	Drain Line 1A nozzle-to-safe end	32	2	8-18	PT	PT/VT
Cold Leg	Drain Line 1B nozzle-to-safe end	33	2	10-18	PT	PT/VT
Cold Leg	Drain Line 2A nozzle-to-safe end	34	2	12-18	PT	VT
Cold Leg	Letdown Line nozzle-to-safe end	36	2	14-18	PT	VT
Cold Leg	Charging Line nozzle-to-safe end	37	2	13-11	PT	PT/VT

U-3	Description	Zone	Size	DM Weld Item Number	1st Interval Examination Method	2nd Interval Examination Method
Cold Leg	SI 1A nozzle-to-safe end	23	14	9-10	UT/PT	UT/PT/VT
Cold Leg	SI 1B nozzle-to-safe end	24	14	11-10	UT/PT	VT
Cold Leg	SI 2A nozzle-to-safe end	25	14	13-10	UT/PT	UT/PT/VT
Cold Leg	SI 2B nozzle-to-safe end	26	14	15-9	UT/PT	VT
Cold Leg	PZR Spray 1A nozzle-to-safe end	27	3	9-11	PT	PT/VT
Cold Leg	PZR Spray 1B nozzle-to-safe end	28	3	11-11	PT	PT/VT
Cold Leg	Drain Line 1A nozzle-to-safe end	32	2	8-18	PT	PT/VT
Cold Leg	Drain Line 1B nozzle-to-safe end	33	2	10-18	PT	PT/VT
Cold Leg	Drain Line 2A nozzle-to-safe end	34	2	12-18	PT	VT
Cold Leg	Letdown Line nozzle-to-safe end	36	2	14-18	PT	VT
Cold Leg	Charging Line nozzle-to-safe end	37	2	13-11	PT	PT/VT

NRC Question 2

In Section 3.0, the licensee cited the ASME Code, Section XI, Code Case N-504-2 as applicable code requirements. Code Case N-504-2 has been superseded by Code Case N-504-3 and the staff has approved Code Case N-504-3 with conditions as shown in Table 2 of Regulatory Guide 1.147, Revision 15. Code Case N-504-3 is the appropriate Code Case for the subject relief request. Please provide a comparison of the differences between N-504-2 and N-504-3, identify any deficiencies in the proposed relief request as a result of not using N-504-3, determine the significance of the deficiencies, and submit a supplement or a revised relief request, as appropriate.

APS Response

APS performed a comparison of the differences between N-504-2 and N-504-3, and concluded there were no deficiencies in the proposed relief request as a result of not using Code Case N-504-3. Specifically, Code Case N-504-3 incorporated a restriction on submerged arc welding (which was not used by AP) and incorporated acceptance

criteria identified in Section XI, Appendix Q (which was used by APS and cited in the original Relief Request). Nonetheless, APS has updated Relief Request 36, Revision 1 to reflect Code Case N-504-3. These changes are shown by revision bars.

NRC Question 3

Recent operating experience of weld overlay installations has shown that hot cracking occurs in the base metal and/or deposited weld when Alloy 52 or 52M is deposited on the stainless steel base metal that contains relatively high sulfur. To solve the problem, some licensees have deposited a buffer layer of stainless steel weld metal on the stainless steel base metal (pipe) to minimize hot cracking. Discuss whether a buffer layer will be applied on the stainless steel pipe prior to depositing Alloy 52 weld metal. If so, provide weld requirements for the buffer layer (e.g., paragraph (e) of ASME Section XI Code Case N-504-3 and weld material specification).

APS Response

During initial weld overlay installations at PVNGS in the spring outage of 2007, cracking was observed in first layer beads installed over stainless steel components associated with the pressurizer surge and hot leg surge nozzles. Palo Verde procedures at that time required Alloy 52M weld filler to be installed directly over the stainless steel components. Subsequent to the spring 2007 outage, procedures were revised to utilize a buffer layer of ER308L weld filler over stainless steel base material prior to weld overlay installation. The use of this material is in accordance with ASME Code Section III. Since the spring 2007 outage, no additional cracking issues have been identified.

NRC Question 4

Section 5.2(b)2 requires that the end transition slope of the overlay not exceed 45 degrees. However, the latest version of Code Case N-740-2 requires that the transition slope not exceed 30 degrees. The staff has approved the 45-degree transition slope in the original Relief Request 36 because at the time, Code Case N-740 specified 45 degrees for the transition slope. However, a 30-degree slope would reduce the stress concentration at the toe of the weld more than a 45-degree slope. Discuss the acceptability of the 45-degree slope in light of the 30-degree slope required by Code Case N-740-2.

APS Response

APS agrees that a 30-degree slope reduces the stress concentration at the toe of the weld when compared to a 45-degree slope. However, due to the configuration of some welds and the location of adjacent welds, slopes greater than 30 degrees may be used. When performing the analysis of the stresses in the toe of the weld, the approach taken by APS is to model the specific weld overlay end configuration, based on dimensions of the overlay design. By using this approach, the finite element model represents and

captures the weld overlay end discontinuity impacts on stress and fulfills the Code Case N-740-2 requirement for analysis of the specific end slope geometry when the end transition slope of the overlay exceeds 30 degrees. In addition, a fatigue strength reduction factor is determined for the maximum (steepest) end slope allowed by the design. This factor is then utilized in the ASME Code, Section III fatigue evaluation and applied to stresses obtained at the end sections.

NRC Question 5

Section 5.2(b)4.i states that a stress analysis will be performed to demonstrate that the nozzles will perform their intended design function with the weld overlay and the analysis will be available for NRC review. Although submittal of that analysis is not a requirement, licensees who have requested similar weld overlay relief requests have typically submitted a summary of the stress analysis to the NRC staff at headquarters prior to the unit achieving Mode 4 of operation. Please indicate whether APS plans to submit the stress analysis for the weld overlay of the subject DMWs to the NRC prior to Mode 4 entry for each unit.

APS Response

APS commits to submit a summary report of the results of the ASME III and ASME XI analyses that demonstrates the full structural weld overlay applications will perform their intended design function. The report will be submitted prior to Mode 4 entry following the outage in which the weld overlays are applied.

NRC Question 6

Sections 5.3(a)2 and 5.3(a)3 state that the liquid penetrant examination and ultrasonic examination shall be conducted at least 48 hours after the completed overlay has returned to ambient temperature when ambient temperature temper bead welding is used. However, Section 5.3(a)3 also states that "APS will be using Relief Request 37, previously approved on June 21, 2007, which authorized the 48-hour hold time to begin following the completion of the third layer of the weld overlay..." The staff has permitted the 48-hour hold time to begin following the completion of the third layer of the weld overlay. However, the statements in Sections 5.3(a)2 and 5.3(a)3 regarding "...48 hours after the completed overlay has returned to ambient temperature...," should be either revised or eliminated to avoid ambiguity.

APS Response

APS has revised Sections 5.3(a)2 and 5.3(a)3 to reflect Relief Request 37 as follows:

(a) Acceptance Examination

1. The weld overlay shall have a surface finish of 250 micro-inches RMS or better and a flatness sufficient to allow for adequate examination in accordance with procedures qualified per Appendix VIII. The weld overlay shall be examined to verify acceptable configuration.

2. The weld overlay and the adjacent base material for at least 1/2 inch from each side of the weld shall be examined using the liquid penetrant method. The weld overlay shall satisfy the surface examination acceptance criteria for welds of the Construction Code or ASME Section III, NB-5300. The adjacent base metal shall satisfy the surface examination acceptance criteria for base material of the Construction Code or ASME Section III, NB-2500. If ambient temperature temper bead welding is used, the liquid penetrant examination shall be conducted at least 48 hours after the completion of the third layer of the weld overlay in accordance with Relief Request 37.~~after the completed overlay has returned to ambient temperature~~.

3. The examination volume A-B-C-D in Figure 1 below shall be ultrasonically examined to assure adequate fusion (i.e., adequate bond) with the base metal and to detect welding flaws, such as interbead lack of fusion, inclusions, or cracks. The interface C-D shown between the overlay and the weld includes the bond and the heat affected zone from the overlay. If ambient temperature temper bead welding is used, the UT shall be conducted at least 48 hours after the completion of the third layer of the weld overlay in accordance with Relief Request 37.~~after the completed overlay has returned to ambient temperature. APS will be using Relief Request 37, previously approved on June 21, 2007, which authorized the 48-hour hold time to begin following the completion of the third layer of the weld overlay. Since Relief Request 37 was approved for the remainder of the third inspection interval and modifies the welding process described in Relief Request 36, Revision 1, Relief Request 37 is not being resubmitted.~~

NRC Question 7

Sections 5.3(a)4, 5.3(a)5.ii, 5.3(b)2 requires that wall thickness of "t_w" be the thickness of the weld overlays to disposition indications detected in accordance with Table IWB-3514-2 of the ASME Code, Section XI, during the acceptance and pre-service examination. However, Section 5.3(c)3 does not provide a definition of the wall thickness in dispositioning indication(s) detected during inservice examinations.

Discuss the wall thickness that will be used to disposition indications detected using Table IWB-3514-2 during the inservice examinations.

APS Response

Section 5.3(c)3 was revised to add a new second sentence that states: In applying the acceptance standards, the wall thickness, "t_w", shall be the thickness of the weld overlay.

> The inservice examination acceptance standards of Table IWB-3514-2 shall be applied to planar indications detected in the weld overlay material. In applying the acceptance standards, the wall thickness, "t_w", shall be the thickness of the weld overlay. If the planar indication is found acceptable per Table IWB-3514-2, the weld overlay will be re-examined in accordance with 5.3(c)5. If the inservice acceptance criteria of Table IWB-3514-2 are not met, the planar flaw may be evaluated in accordance with IWB-3640, provided that the flaw is not caused by PWSCC. If accepted for continued service the weld overlay will be re-examined in accordance with 5.3(c)5. If the flaw is not acceptable for continued service per IWB-3640, then it shall be repaired.

NRC Question 8

Section 5.5 (third paragraph on page 13) states that "...If a flaw is detected in the upper 25% of the original material during the pre-service examination, the actual flaw size would be used for the crack growth evaluations..." In Section 5.3, the licensee states that ultrasonic testing (UT) will not be performed on DMWs prior to overlay installation. Therefore, the condition of the DMWs will not be known prior to weld overlay installation. Also, UT is not qualified to detect flaws in the inner 75% of the weld thickness of the DMW once the weld overlay is installed on the DMW. Therefore, the condition of the inner 75% of the DMW wall thickness will not be known after overlay installation. In such case, the postulated flaw in the above statement is not conservative. The staff's position is that a worst case flaw (i.e., 75% through wall depth) should be assumed in the inner 75% region of the DMW at a minimum. If a flaw is detected in the upper 25% of the original material during the pre-service or inservice examinations, the flaw depth used for the crack growth evaluations should be the actual detected flaw depth plus the flaw of 75% through-wall depth assumed in the inner (lower) 75% wall thickness region. Please clarify the size of the flaw that will be assumed in the crack growth calculations.

APS Response

APS concurs that if a flaw is detected in the upper 25% of the original material during the pre-service or inservice examinations, the flaw depth used for the crack growth evaluations should be the actual detected flaw depth plus the flaw of 75% through-wall

depth assumed in the inner (lower) 75% wall thickness region. The crack growth considerations described in Section 5.2(a) reflect this position.

NRC Question 9

In previous NRC-approved weld overlay relief requests; the staff has requested that licensees submit the following information within 14 days of completion of the weld overlay examination:

(a) A discussion of any repairs to the overlay material and/or base metal and the reason for the repair.

(b) A listing of indications detected. The recording criteria of the ultrasonic examination procedure to be used for the examination overlays requires that all indications, regardless of amplitude, be investigated to the extent necessary to provide accurate characterization, identity, and location. Additionally, the procedure requires that all indications, regardless of amplitude, that cannot be clearly attributed to the geometry of the overlay configuration be considered flaw indications.

(c) The disposition of all indications using the standards of ASME Code Section XI, IWB-3514-2 and/or IWB-3514-3 criteria and, if possible, the type and nature of the indications need to be submitted. The ultrasonic examination procedure requires that all suspected flaw indications are to be plotted on a cross-sectional drawing of the weld and that the plots should accurately identify the specific origin of the reflector.

Please commit to submit the information within 14 days of completion of examination of the installed weld overlays or explain why the information need not be submitted.

APS Response

APS commits to provide the information delineated in question 9 to the NRC Project Manager within 14 days after the completion of the ultrasonic examination of the weld overlay installations.

NRC Question 10

Discuss whether any component in the subject nozzle configurations (e.g., nozzles, safe ends, and pipes) is fabricated with cast austenitic stainless steel (CASS) material. If CASS material is used in the nozzle configurations, discuss how the inspection of the DMW can be accomplished because the ultrasonic signals passing through the CASS component located adjacent to the DMW will distort the ultrasonic signals.

APS Response

There are no components in the subject nozzle configurations (e.g., nozzles, safe ends, and pipes) that are fabricated with CASS material.

NRC Question 11

Relief Request 36, Revision 1, does not explain the technical basis for the alternative and the differences between the Performance Demonstration Initiative (PDI) program and the requirements of Supplement 11, Appendix VIII to the ASME Code, Section XI. In Attachment 3, page 6, of the original Relief Request 36, dated May 8, 2008, the licensee stated that it did not provide a comparison of the differences between the PDI program and Supplement 11 to Appendix VIII because the PDI program status for Code Compliance and Applicability developed in June 2005 indicates that the PDI program is in compliance with Appendix VIII, 2001 Edition of ASME, Section XI. The staff cannot make a finding on the adequacy of the PDI program for Palo Verde without reviewing a comparison of the PDI program with Supplement 11 to Appendix VIII of the ASME Code, Section XI, in the submittal. Please submit the comparisons and associated technical basis of the PDI program to demonstrate that it complies with Supplement 11 or provide technical basis of the PDI program.

APS Response

The table below provides the comparisons and associated technical basis of the PDI program to demonstrate that it complies with Supplement 11 or provides the technical basis of the PDI program.

SUPPLEMENT 11 - QUALIFICATION REQUIREMENTS FOR FULL STRUCTURAL OVERLAID WROUGHT AUSTENITIC PIPING WELDS	PDI PROGRAM: The Proposed Alternative to Supplement 11 Requirements
1 0 SPECIMEN REQUIREMENTS	
1.1 General. The specimen set shall conform to the following requirements.	
(b) The specimen set shall consist of at least three specimens having different nominal pipe diameters and overlay thicknesses. They shall include the minimum and maximum nominal pipe diameters for which the examination procedure is applicable. Pipe diameters within a range of 0.9 to 1.5 times a nominal diameter shall be considered equivalent. If the procedure is applicable to pipe diameters of 24 in. or larger, the specimen set must include at least one specimen 24 in. or larger but need not include the maximum diameter. The specimen set must include at least one specimen with overlay thickness within -0.1 in. to +0.25 in. of the maximum nominal overlay thickness for which the	**Alternative:** (b) The specimen set shall include specimens with overlays not thicker than 0.1 in. more than the minimum thickness, nor thinner than 0.25 in. of the maximum nominal overlay thickness for which the examination procedure is applicable. **Basis:** To avoid confusion, the overlay thickness tolerance contained in the last sentence was reworded and the phrase "and the remainder shall be alternative flaws" was added to the next to last sentence in paragraph 1.1 (d) (1) .

SUPPLEMENT 11 - QUALIFICATION REQUIREMENTS FOR FULL STRUCTURAL OVERLAID WROUGHT AUSTENITIC PIPING WELDS	PDI PROGRAM: The Proposed Alternative to Supplement 11 Requirements
procedure is applicable.	
(d) Flaw Conditions	
(1) Base metal flaws. All flaws must be cracks in or near the ~ butt weld heat-affected zone, open to the inside surface, and extending at least 75% through the base metal wall. Flaws may extend 100% through the base metal and into the overlay material; in this case, intentional overlay fabrication flaws shall not interfere with ultrasonic detection or characterization of the cracking. Specimens containing IGSCC shall be used when available.	**Alternative:** (1) ... must be in or... intentional overlay fabrication flaws shall not interfere with ultrasonic detection or characterization of the base metal flaws. Specimens containing intergranular stress corrosion cracking shall be used when available. At least 70% of the flaws in the detection and sizing tests shall be cracks and the remainder shall be alternative flaws. Alternative flaw mechanisms, if used, shall provide crack-like reflective characteristics and shall be limited by the following: (a) The use of alternative flaws shall be limited to when the implantation of cracks produces spurious reflectors that are uncharacteristic of actual flaws. (b) Flaws shall be semi elliptical with a tip width of less than or equal to 0.002 inches. **Basis:** This paragraph requires that all base metal flaws be cracks. Implanting a crack requires excavation of the base material on at least one side of the flaw. While this may be satisfactory for ferritic materials, it does not produce a useable axial flaw in austenitic materials because the sound beam, which normally passes only through base material, must now travel through weld material on at least one side, producing an unrealistic flaw response. To resolve this issue, the PDI program revised this paragraph to allow use of alternative flaw mechanisms under controlled conditions. For example, alternative flaws shall be limited to when implantation of cracks precludes obtaining an effective ultrasonic response, flaws shall be semi elliptical with a tip width of less than or equal to 0.002 inches, and at least 70% of the flaws in the detection and sizing test shall be cracks and the remainder shall be alternative flaws. To avoid confusion, the overlay thickness tolerance contained in paragraph 1.1(b) last sentence, was reworded and the phrase "and the remainder shall be alternative flaws" was added to the next to last sentence. Paragraph 1.1(d)(1) includes the statement that intentional overlay fabrication flaws shall not interfere with ultrasonic detection or characterization of the base metal flaws.
(e) Detection Specimens	
(1) At least 20% but less than 40% of the flaws shall be oriented within +/-20° of the pipe axial direction. The remainder shall be oriented circumferentially. Flaws shall not be open to any	**Alternative:** (1) At least 20% but less than 40% of the base metal flaws shall be oriented within +/-20° of the pipe axial direction. The remainder shall be oriented circumferentially. Flaws shall not be open to

SUPPLEMENT 11 - QUALIFICATION REQUIREMENTS FOR FULL STRUCTURAL OVERLAID WROUGHT AUSTENITIC PIPING WELDS	PDI PROGRAM: The Proposed Alternative to Supplement 11 Requirements
surface to which the candidate has physical or visual access. The rules of IWA-3300 shall be used to determine whether closely spaced flaws should be treated as single or multiple flaws.	any surface to which the candidate has physical or visual access. **Basis:** The requirement for axially oriented overlay fabrication flaws was excluded from the PDI Program as an improbable scenario. Weld overlays are typically applied using automated GTAW techniques with the filler metal applied in a circumferential direction. Because resultant fabrication induced discontinuities would also be expected to have major dimensions oriented in the circumferential direction axial overlay fabrication flaws are unrealistic. The requirement for using IWA-3300 for proximity flaw evaluation was excluded, instead indications will be sized based on their individual merits.
(2) Specimens shall be divided into base and overlay grading units. Each specimen shall contain one or both types of grading units.	**Alternative:** (2) Specimens shall be divided into base metal and overlay fabrication grading units. Each specimen shall contain one or both types of grading units. Flaws shall not interfere with ultrasonic detection or characterization of other flaws. **Basis:** The PDI program adds clarification with the addition of the word "fabrication" to denote the overlay process and ensures flaw identification by ensuring all flaws will not be masked by other flaws with the addition of, "Flaws shall not interfere with ultrasonic detection or characterization of other flaws." PDI's alternative provides clarification and assurance that the flaws are identified and associated with the appropriate material.
(a)(1) A base grading unit shall include at least 3 in. of the length of the overlaid weld. The base grading unit includes the outer 25% of the overlaid weld and base metal on both sides. The base grading unit shall not include the inner 75% of the overlaid weld and base metal overlay material, or base metal to-overlay interface.	**Alternative:** (a)(1) A base metal grading unit includes the overlay material and the outer 25% of the original overlaid weld. The base metal grading unit shall extend circumferentially for at least 1 inch. and shall start at the weld centerline and be wide enough in the axial direction to encompass one half of the original weld crown and a minimum of 0.50 inches of the adjacent base material. **Basis:** The phrase "and base metal on both sides," was inadvertently included in the description of a base metal grading unit, The PDI program intentionally excludes this requirement because some of the qualification samples include flaws on both sides of the weld. To avoid confusion several instances of the term "cracks" or "cracking" were changed to the term "flaws" because of the use of alternative flaw mechanisms. Modified to require that a base metal grading unit include at least 1 inch. of the length of the overlaid weld, rather than 3 inches.

SUPPLEMENT 11 - QUALIFICATION REQUIREMENTS FOR FULL STRUCTURAL OVERLAID WROUGHT AUSTENITIC PIPING WELDS	PDI PROGRAM: The Proposed Alternative to Supplement 11 Requirements
(a)(2) When base metal cracking penetrates into the overlay material, the base grading unit shall include the overlay metal within 1 in. of the crack location. This portion of the overlay material shall not be used as part of any overlay grading unit.	**Alternative:** (a)(2) When base metal flaws penetrate into the overlay material, the base metal grading unit shall not be used as part of any overlay fabrication grading unit. **Basis:** The PDI reworded this requirement and removed the criterion for 1-inch-side-spacing parallel to the weld to permit flaws on both sides of the welds. The PDI program adjusts for the changes in paragraph 1.1(e)(2)(a)(2) and, conservatively stated that when base metal flaws penetrate into the overlay material, the base metal grading unit shall not be used as part of any fabrication grading unit, thus preventing double-counting of a single flaw.
(a)(3) When a base grading unit is designed to be unflawed, at least 1 in. of unflawed overlaid weld and base metal shall exist on either side of the base grading unit. The segment of weld length used in one base grading unit shall not be used in another base grading unit. Base grading units need not be uniformly spaced around the specimen.	**Alternative:** (a)(3) Sufficient unflawed overlaid weld and base metal shall exist on all sides of the grading unit to preclude interfering reflections from adjacent flaws. Modified to require sufficient unflawed overlaid weld and base metal to exist on all sides of the grading unit to preclude interfering reflections from adjacent flaws, rather than the 1 inch requirement. **Basis:** This weld overlay is designed to minimize the number of false identifications of extraneous reflectors. The PDI program stipulates that unflawed overlaid weld and base metal must exist on all sides of the grading unit and that flawed grading units must be free of interfering reflections from adjacent flaws. These requirements address the same concerns as the Code and permit utilization of existing specimens from the Tri-Party Agreement.
(b)(1) An overlay grading unit shall include the overlay material and the base metal-to-overlay interface of at least 6 in^2. The overlay grading unit shall be rectangular, with minimum dimensions of 2 in.	**Alternative:** (b)(1) An overlay fabrication grading unit shall include the overlay material and the base metal-to-overlay interface for a length of at least 1 in. Modified to require sufficient unflawed overlaid weld and base metal to exist on all sides of the grading unit to preclude interfering reflections from adjacent flaws, rather than the I inch requirement **Basis:** The PDI program reduces the base metal-to-overlay interface to a minimum of 1 inch (in lieu of a minimum of 2 inches) and eliminates the minimum rectangular dimension. This criterion is necessary to allow the use of existing examination specimens that were fabricated with flaws on both side of the weld which were used for performance testing to meet NRC Generic Letter 88-01 (Tri-party Agreement in Reference 1). This criterion is more conservative than the Code because of the variability associated with different-shaped grading units.

SUPPLEMENT 11 - QUALIFICATION REQUIREMENTS FOR FULL STRUCTURAL OVERLAID WROUGHT AUSTENITIC PIPING WELDS	PDI PROGRAM: The Proposed Alternative to Supplement 11 Requirements
(b)(2) An overlay grading unit designed to be unflawed shall be surrounded by unflawed overlay material and unflawed base metal-to-overlay interface for at least 1 in. around its entire perimeter. The specific area used in one overlay grading unit shall not be used in another overlay grading unit. Overlay grading units need not be spaced uniformly about the specimen.	**Alternative:** (b)(2) Overlay fabrication grading units designed to be unflawed shall be separated by unflawed overlay material and unflawed base metal-to-overlay interface for at least 1 in. at both ends. Sufficient unflawed overlaid weld and base metal shall exist on both sides of the overlay fabrication grading unit to preclude interfering reflections from adjacent flaws. The specific area used in one overlay fabrication grading unit shall not be used in another overlay fabrication grading unit. Overlay fabrication grading units need not be spaced uniformly about the specimen. **Basis:** Paragraph 1.1 (e)(2)(b)(2) states that overlay fabrication grading units designed to be unflawed shall be separated by unflawed overlay material and unflawed base metal-to-overlay interface for at least 1 in. at both ends, rather than around its entire perimeter.
(b)(3) Detection sets shall be selected from Table VIII-S2-1. The minimum detection sample set is five flawed base grading units, ten unflawed base grading units, five flawed overlay grading units, and ten unflawed overlay grading units. For each type of grading unit, the set shall contain at least twice as many unflawed as flawed grading units.	**Alternative:**...base metal grading units, ten unflawed base metal grading units, five flawed overlay fabrication grading units, and ten unflawed overlay fabrication grading units. For each type of grading unit, the set shall contain at least twice as many unflawed as flawed grading units. *For initial procedure qualification, detection sets shall include the equivalent of three personnel qualification sets. To qualify new values of essential variables, at least one personnel qualification set is required.* **Basis:** The PDI program increases the number of flaws for the initial procedure qualification to the equivalent of three times the number of flaws required for a personal qualification. To qualify new values of essential variables, the equivalent of at least one personal qualification set is required.
(f) Sizing Specimen	
(1) The minimum number of flaws shall be ten. At least 30% of the flaws shall be overlay fabrication flaws. At least 40% of the flaws shall be cracks open to the inside surface.	**Alternative:** (1) The...least 40% of the flaws shall be open to the inside surface. Sizing sets shall contain a distribution of flaw dimensions to assess sizing capabilities. For initial procedure qualification, sizing sets shall include the equivalent of three personnel qualification sets. To qualify new values of essential variables, at least one personnel qualification set is required. **Basis:** The PDI's additions enhance the ASME Code requirements and, therefore, are acceptable because they provide more stringent qualification criteria.
(3) Base metal cracking used for length sizing	**Alternative:** (3) Base metal flaws

SUPPLEMENT 11 - QUALIFICATION REQUIREMENTS FOR FULL STRUCTURAL OVERLAID WROUGHT AUSTENITIC PIPING WELDS	PDI PROGRAM: The Proposed Alternative to Supplement 11 Requirements
demonstrations shall be oriented circumferentially.	used...circumferentially. **Basis:** this clarification in the PDI program meets the intent of the ASME Code requirements, and is acceptable.
(4) Depth sizing specimen sets shall include at least two distinct locations where cracking in the base metal extends into the overlay material by at least 0.1 in. in the through-wall direction.	**Alternative:** (4) Depth sizing specimen sets shall include at least two distinct locations where a base metal flaw extends into the overlay material by at least 0.1 in. in the through-wall direction. **Basis:** this clarification in the PDI program meets the intent of the ASME Code requirements, and is acceptable.
2.0 Conduct of Performance Demonstration	
The specimen inside surface and identification shall be concealed from the candidate. All examinations shall be completed prior to grading the results and presenting the results to the candidate. Divulgence of particular specimen results or candidate viewing of unmasked specimens after the performance demonstration is prohibited.	**Alternative:** The specimen ...prohibited. The overlay fabrication flaw test and the base metal flaw test may be performed separately. **Basis:** The ASME Code is nonspecific on this issue. Since flaw specific criteria exist for the overlay fabrication process, separating the base metal test should produce the same results as the combined test.
2.1 Detection Test.	
Flawed and unflawed grading units shall be randomly mixed. Although the boundaries of specific grading units shall not be revealed to the candidate, the candidate shall be made aware of the type or types of grading units (base or overlay) that are present for each specimen.	**Alternative:** Flawed...(base metal or overlay fabrication)...each specimen. **Basis:** The change provides consistency with the terms normally used for these applications in the manufacturing sector. The change is editorial in nature.
2.2 Length Sizing Test	
(d) For flaws in base grading units, the candidate shall estimate the length of that part of the flaw that is in the outer 25% of the base wall thickness.	**Alternative:** (d) For . . . base metal grading . . . base metal wall thickness. **Basis:** The change provides consistency with the terms normally used for these applications in the manufacturing sector. The change is editorial in nature.
2.3 Depth Sizing Test.	
For the depth sizing test, 80% of the flaws shall be sized at a specific location on the surface of the specimen identified to the candidate. For the remaining flaws, the regions of each specimen containing a flaw to be sized shall be identified to the candidate. The candidate shall determine the maximum depth of the flaw in each region.	**Alternative:** (a) The depth sizing test may be conducted separately or in conjunction with the detection test. (b) When the depth sizing test is conducted in conjunction with the detection test and the detected flaws do not satisfy the requirements of 1.1(f), additional specimens shall be provided to the candidate. The regions containing a flaw to be sized shall be identified to the candidate. The candidate shall determine the maximum depth of the flaw in each region.

SUPPLEMENT 11 - QUALIFICATION REQUIREMENTS FOR FULL STRUCTURAL OVERLAID WROUGHT AUSTENITIC PIPING WELDS	PDI PROGRAM: The Proposed Alternative to Supplement 11 Requirements
	(c) For a separate depth sizing test, the regions of each specimen containing a flaw to be sized shall be identified to the candidate. The candidate shall determine the maximum depth of the flaw in each region. **Basis:** PDI stated that grading units are not applicable to sizing tests, and that each sizing region will be large enough to contain the target flaw, but small enough that candidates will not attempt to size a different flaw. The above clarification provides a basis for implementing sizing tests in a systematic, consistent manner that meets the intent of Supplement 11. When performed in conjunction with the detection test, the sizing is more conservative because of the absence of prior knowledge of the flaw locations.
3.0 ACCEPTANCE CRITERIA	
3.1 Detection Acceptance Criteria	
Examination procedures, equipment, and personnel are qualified for detection when the results of the performance demonstration satisfy the acceptance criteria of Table VIII-S2-1 for both detection and false calls. The criteria shall be satisfied separately by the demonstration results for base grading units and for overlay grading units.	**Alternative**: Examination procedures are qualified for detection when: a. All flaws within the scope of the procedure are detected and the results of the performance demonstration satisfy the acceptance criteria of Table VIII-S2-1 for false calls. b. At least one successful personnel demonstration has been performed meeting the acceptance criteria defined in (c). c. Examination equipment and personnel are qualified for detection when the results of the performance demonstration satisfy the acceptance criteria of Table VIII-S2-1 for both detection and false calls. d. The criteria in (b) and (c) shall be satisfied separately by the demonstration results for base metal grading units and for overlay fabrication grading units. **Basis:** The PDI program allows procedure qualification to be performed separately from personnel and equipment qualification. Historical data indicate that, if ultrasonic detection or sizing procedures are thoroughly tested, personnel and equipment using those procedures have a higher probability of successfully passing a qualification test. In an effort to increase this passing rate, PDI has elected to perform procedure demonstration separately in order to assess and modify essential variables that may affect overall system capabilities. For a procedure to be qualified, the PDI program requires three times as many flaws to be detected (or sized) than required by Supplement 11.

SUPPLEMENT 11 - QUALIFICATION REQUIREMENTS FOR FULL STRUCTURAL OVERLAID WROUGHT AUSTENITIC PIPING WELDS	PDI PROGRAM: The Proposed Alternative to Supplement 11 Requirements
	Personnel and equipment are still required to meet the Supplement 11 requirement; therefore, the PDI program criteria exceeds the ASME Code requirements for personnel, procedures, and equipment qualification.
3.2 Sizing Acceptance Criteria	
(a) The RMS error of the flaw length measurements, as compared to the true flaw lengths, is less than or equal to 0.75 inch. The length of base metal cracking is measured at the 75% through-base-metal position.	**Alternative:** (a) The...base metal flaws is...position. **Basis:** this clarification in the PDI program maintains the intent of the ASME Code requirement and is acceptable.
(b) All extensions of base metal cracking into the overlay material by at least 0.1 in. are reported as being intrusions into the overlay material.	**Alternative:** This requirement is omitted. **Basis:** The requirement for reporting all extensions of cracking into the overlay is omitted from the PDI Program because it is redundant to the RMS calculations performed in paragraph 3.2(c) and its presence adds confusion and ambiguity to depth sizing as required by paragraph 3.2(c). This also makes the weld overlay program consistent with the supplement 2 depth sizing criteria

NRC Question 12

(a) Discuss any welding or cracking problems that occurred during the weld overlay installation on the pressurizer and shutdown cooling line nozzles per the original Relief Request 36 during the previous refueling outages.

(b) If welding or cracking problems occurred, discuss how welding procedures will be revised to eliminate the same problems for the upcoming weld overlay campaign based on Relief Request 36, Revision 1.

(c) Discuss whether the same welding contractors and welding qualification procedures will be used for the upcoming cold leg weld overlay campaign.

APS Response

Q12(a)

During initial weld overlay installations at PVNGS in the spring outage of 2007, cracking was observed in first layer beads installed over stainless steel components associated with the pressurizer surge and hot leg surge nozzles. Procedures at this time required Alloy 52M weld filler to be installed directly over the stainless steel components. The situation was resolved by removing all 52M filler and installing a buffer layer of stainless steel ER308L weld filler over the existing stainless steel base material. In addition, the final PT exams for three pressurizer safety/relief valve nozzles identified localized indications at the toes of the overlays. Indications were removed or reduced to acceptable limits by light grinding. No welding was involved. No other welding issues were identified.

Q12(b)

Subsequent to the spring 2007 outage, procedures were revised to utilize a buffer layer of ER308L weld filler over stainless steel base material prior to weld overlay installation. Since the spring 2007 outage, no additional cracking issues have been identified.

Q12(c)

APS currently plans to use the same welding procedures for the cold leg nozzle overlays that were used for the recently completed U1, U2, and U3 pressurizer and hot leg nozzle overlays. However, a welding contractor has not yet been selected.

NRC Question 13

Discuss whether a new weld overlay is permitted to be applied on the top of a degraded weld overlay.

APS Response

A new weld overlay is not permitted to be applied on the top of a degraded weld overlay.

NRC Question 14

Provide material specifications of the subject nozzles, DMWs, safe ends, and pipe, and associated drawings. This information should be similar to the material specification tables and drawings in Enclosure 2 of the original Relief Request 36, dated February 8, 2007.

APS Response

Cold Leg Safety Injection Nozzle Materials Unit 1, 2, and 3

	Cold Leg	Nozzle Forgings	Safe Ends	Nozzle-to-Safe End Weld and Butter	Attached Elbows
Nominal Diameter	30"	14"	14"	14"	14"
Material	SA-516 GR 70	Unit 1: SA-182 Grade F1 Units 2 and 3: SA-541 Class 3	SA-182 F316	Alloy 82/182	SA-403 WP304

Cold Leg Pressurizer Spray Nozzle Materials Unit 1, 2, and 3

	Cold Leg	Nozzle Forgings	Safe Ends	Nozzle-to-Safe End Weld and Butter	Attached Pipe
Nominal Diameter	30"	3"	3"	3"	3"
Material	SA-516 GR 70	SA-541 Class 1	SA-182 F316	Alloy 82/182	SA-312 or SA-376 GR TP304

Cold Leg Letdown and Drain / Drain Nozzle Materials Unit 1, 2, and 3

	Cold Leg	Nozzle Forgings	Safe Ends	Nozzle-to-Safe End Weld and Butter	Attached Pipe
Nominal Diameter	30"	2"	2"	2"	2"
Material	SA-516 GR 70	SA-541 Class 1	SA-182 F316	Alloy 82/182	SA-312 or SA-376 GR TP304

Cold Leg Charging Nozzle Materials Unit 1, 2, and 3

	Cold Leg	Nozzle Forgings	Safe Ends	Nozzle-to-Safe End Weld and Butter	Attached Pipe
Nominal Diameter	30"	2"	2"	2"	2"
Material	SA-516 GR 70	SA-541 Class 3	SA-182 F316	Alloy 82/182	SA-312 or SA-376 GR TP304

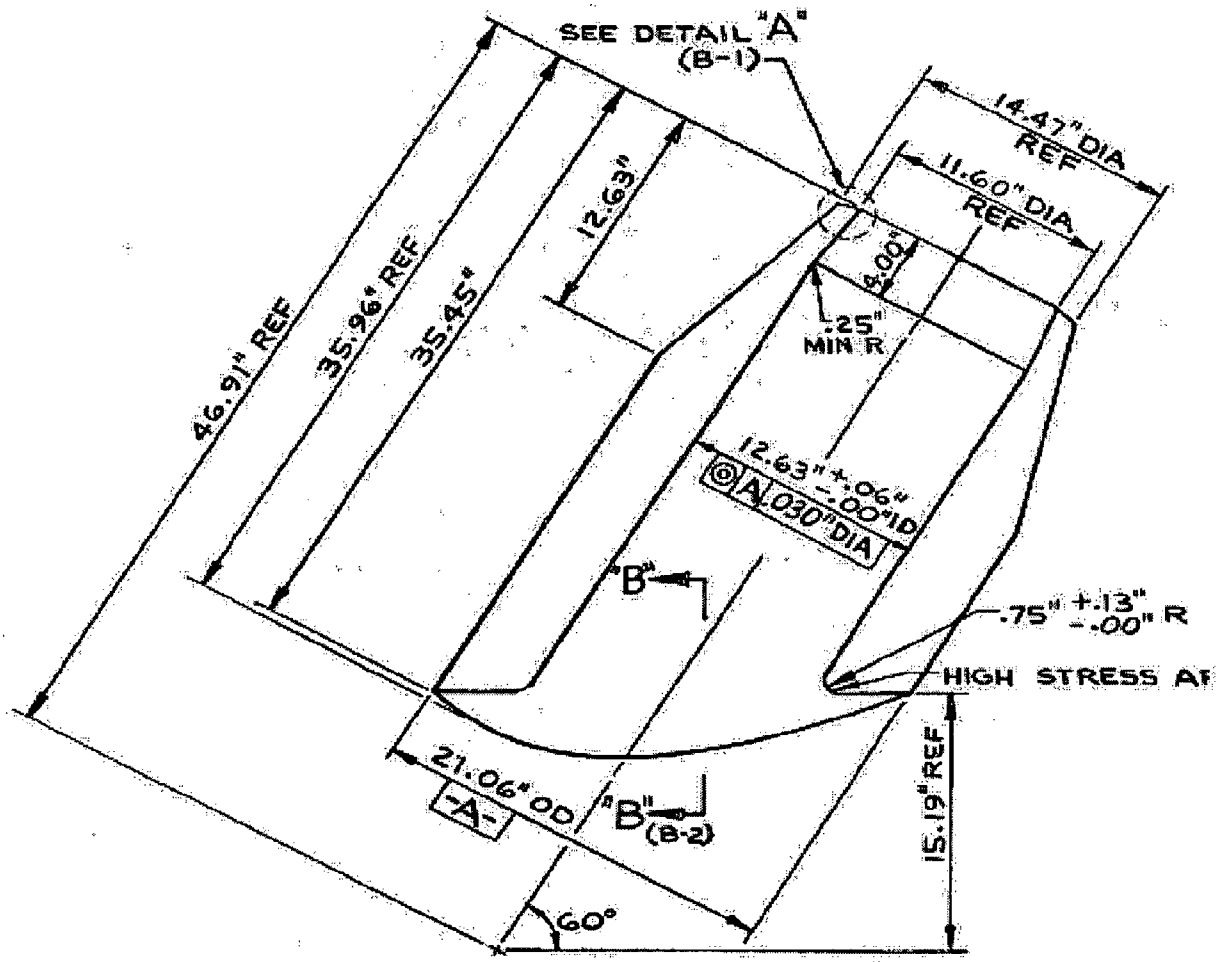

Figure 1: SI Nozzle Forging Typical for All 3 Units

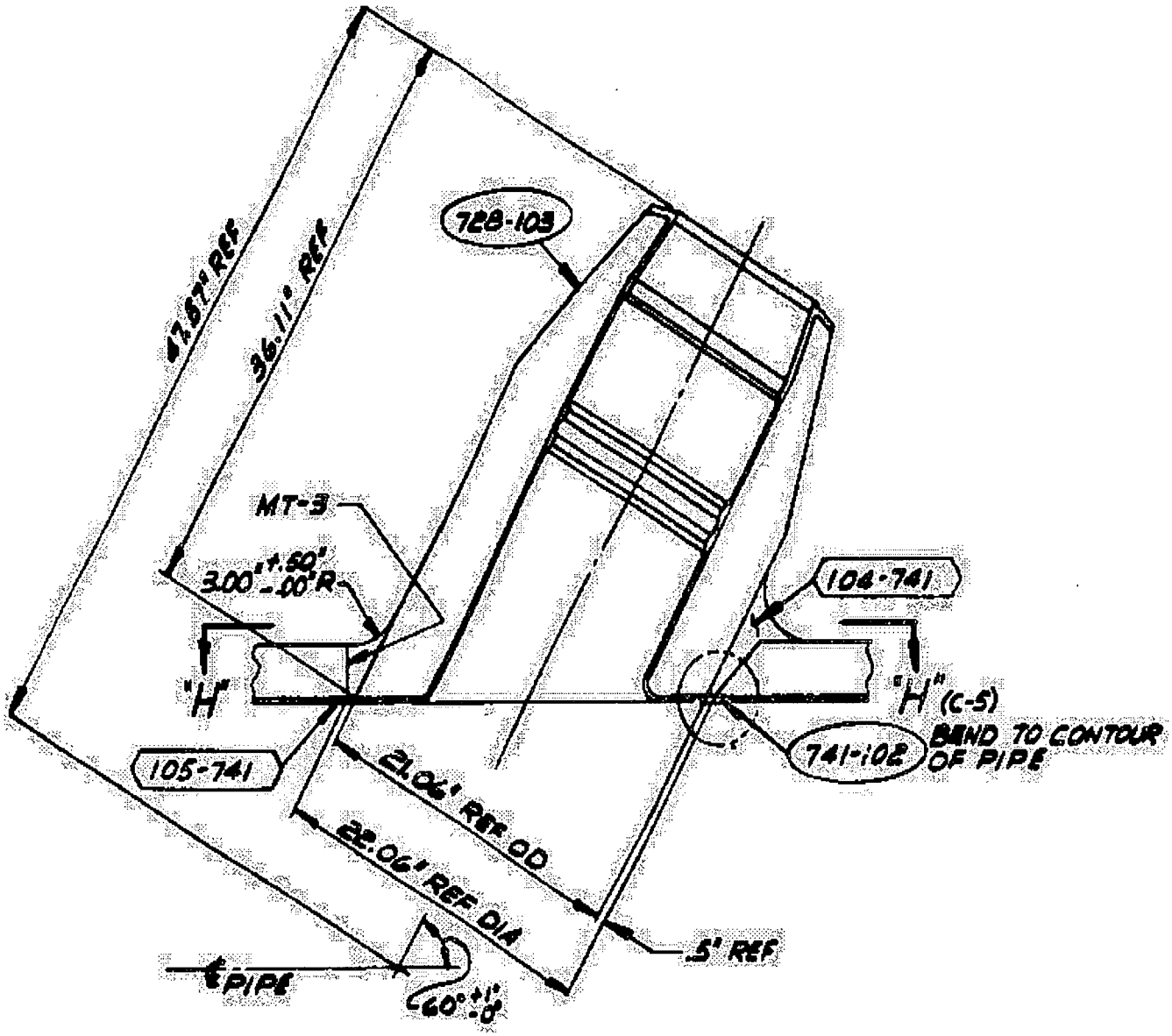

Figure 2: SI Nozzle Installation Detail (Typical)

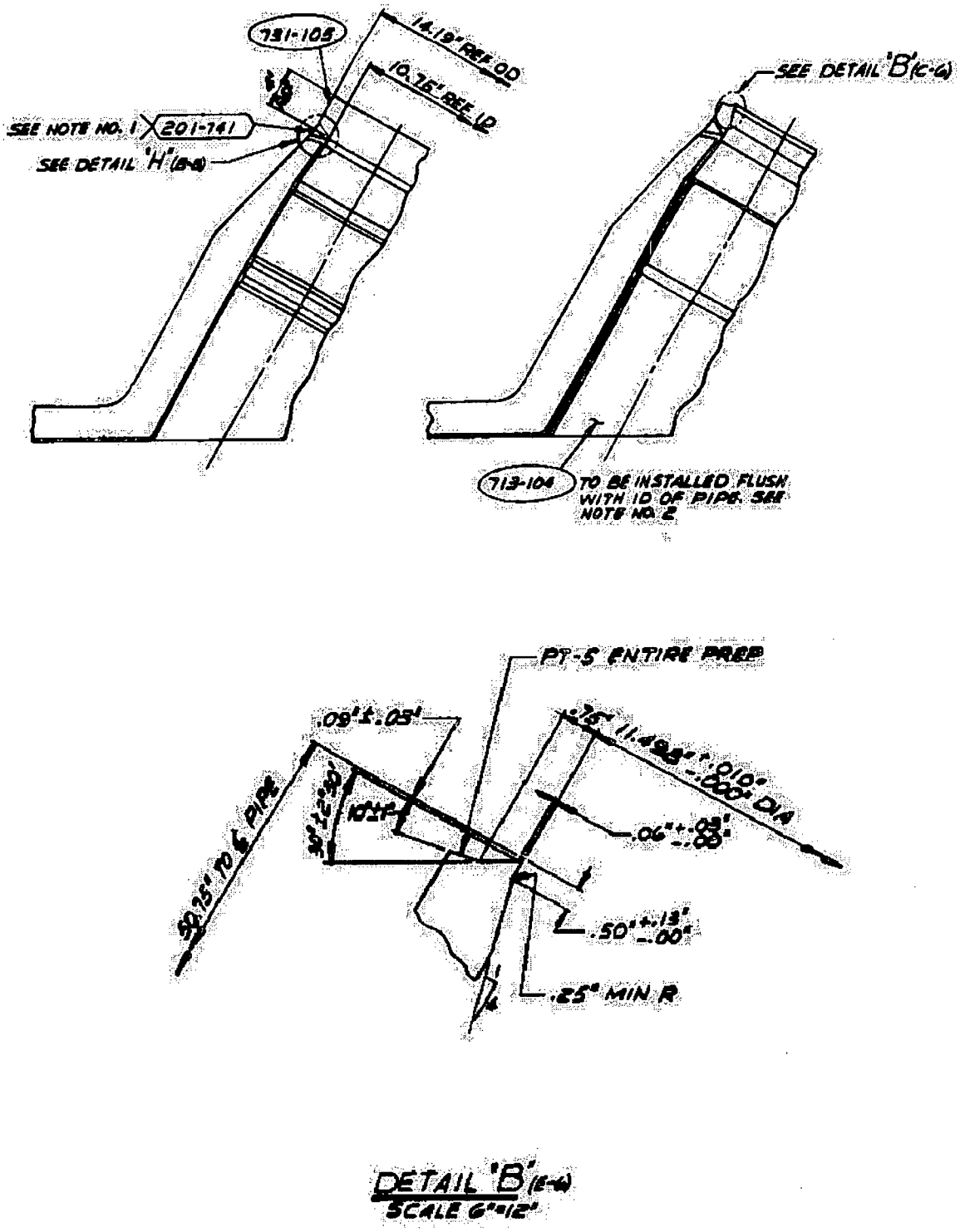

Figure 3: SI Nozzle and Safe-End Final Machining90° Long Radius Elbow Attaches Directly to Safe-End (Typical)

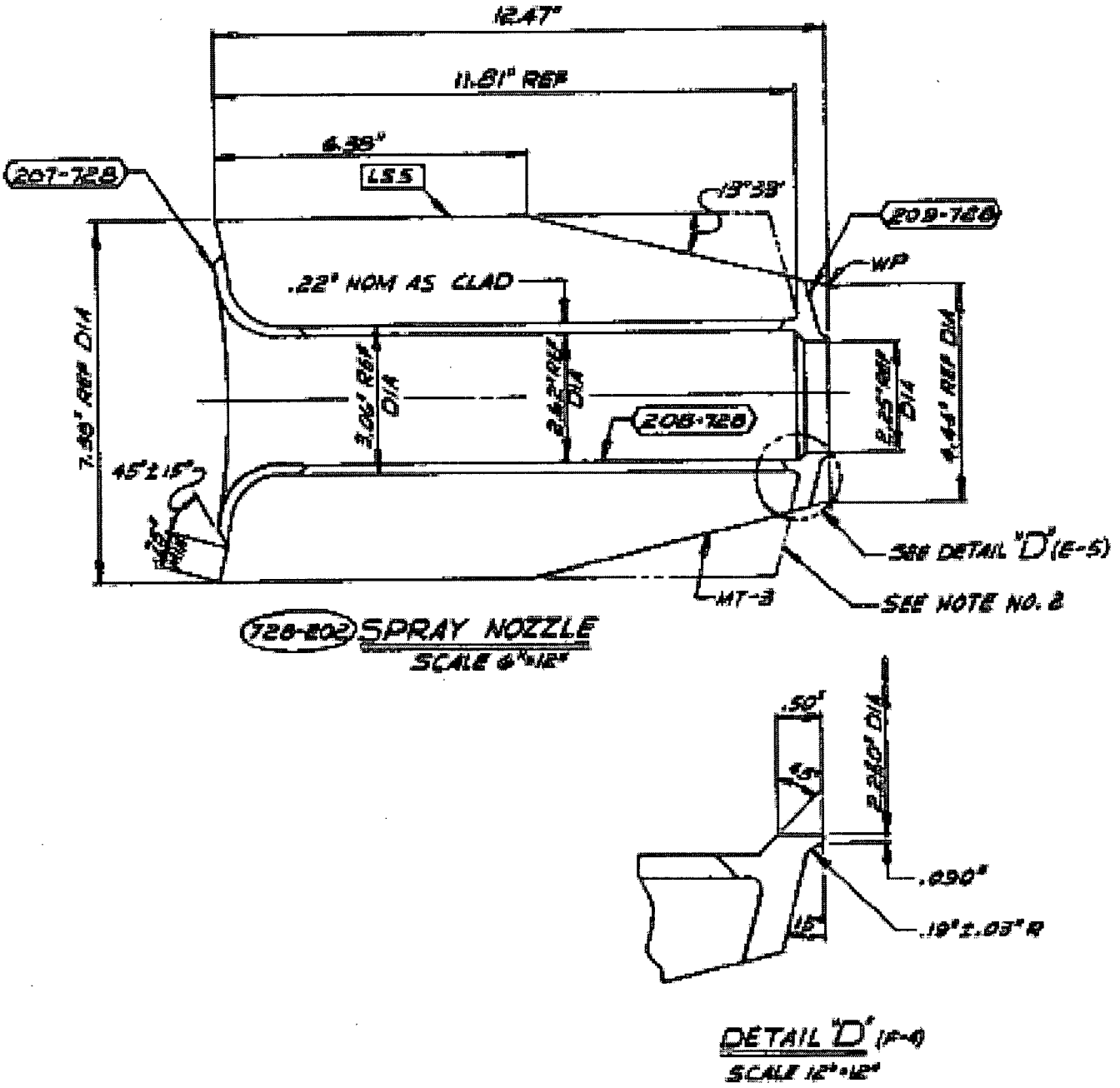

Figure 4: Spray Nozzle Final Machining (Typical for All 3 Units)

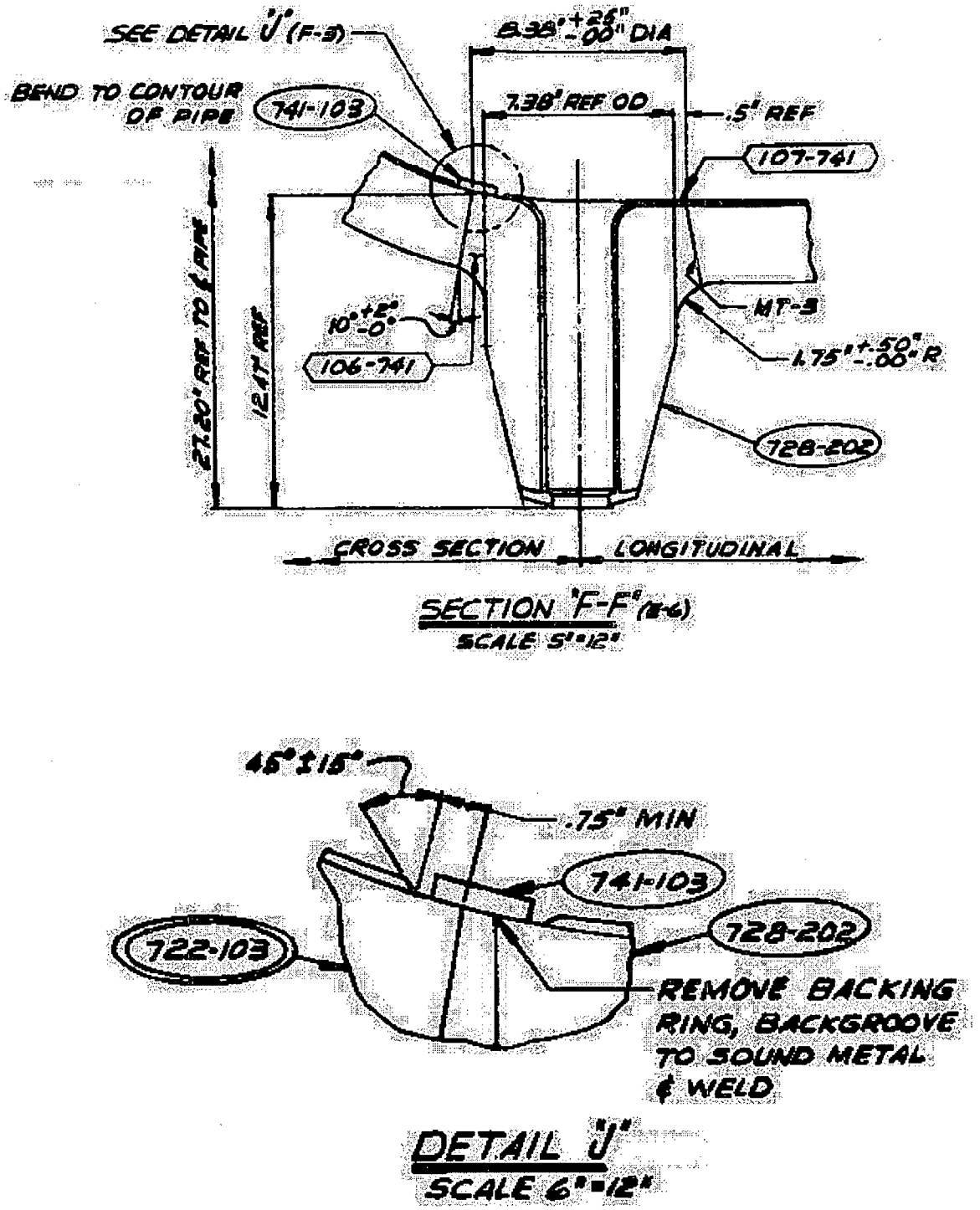

Figure 5: Spray Nozzle Installation (Typical)

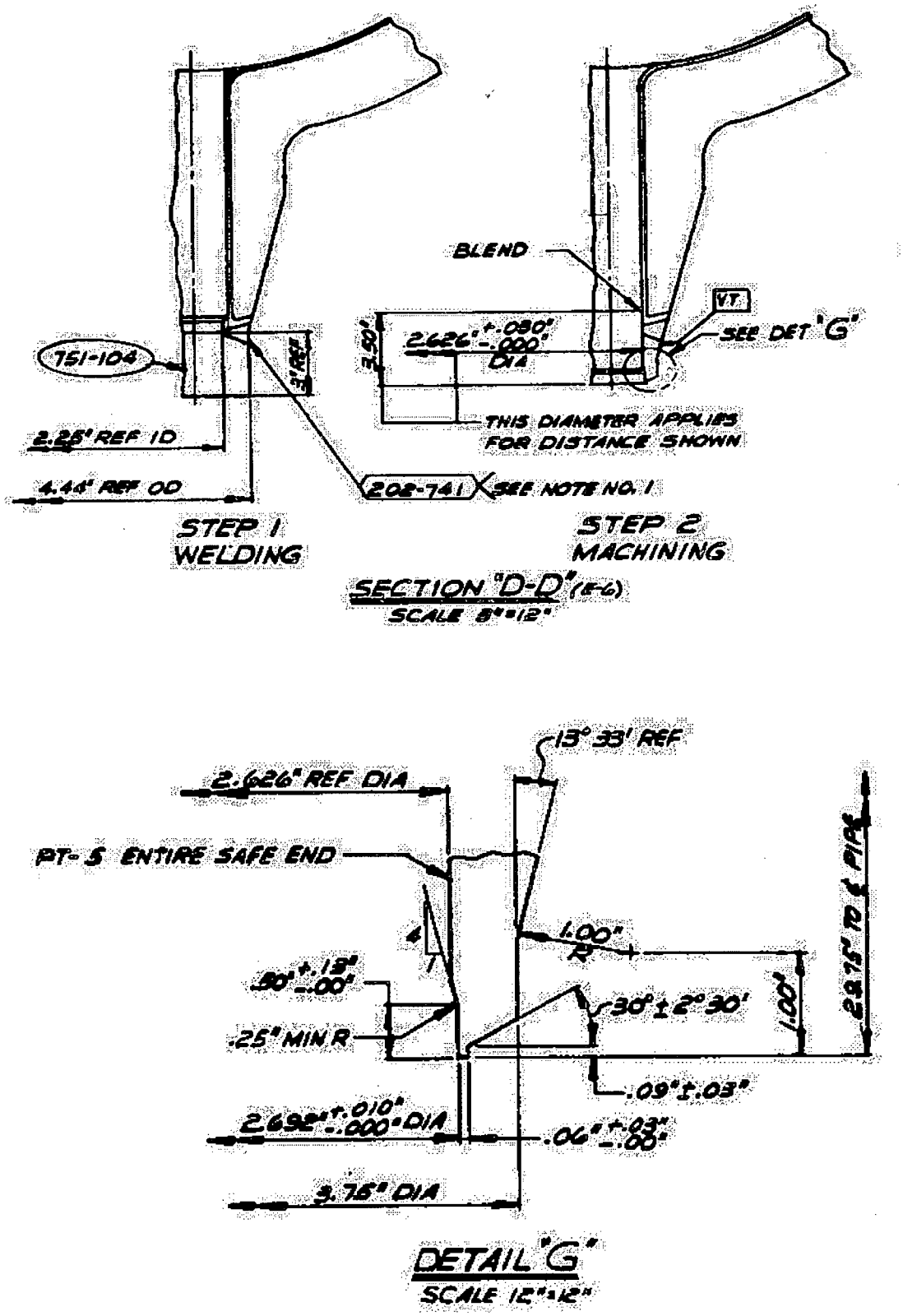

Figure 6: Spray Nozzle and Safe-End Final Machining (Typical)

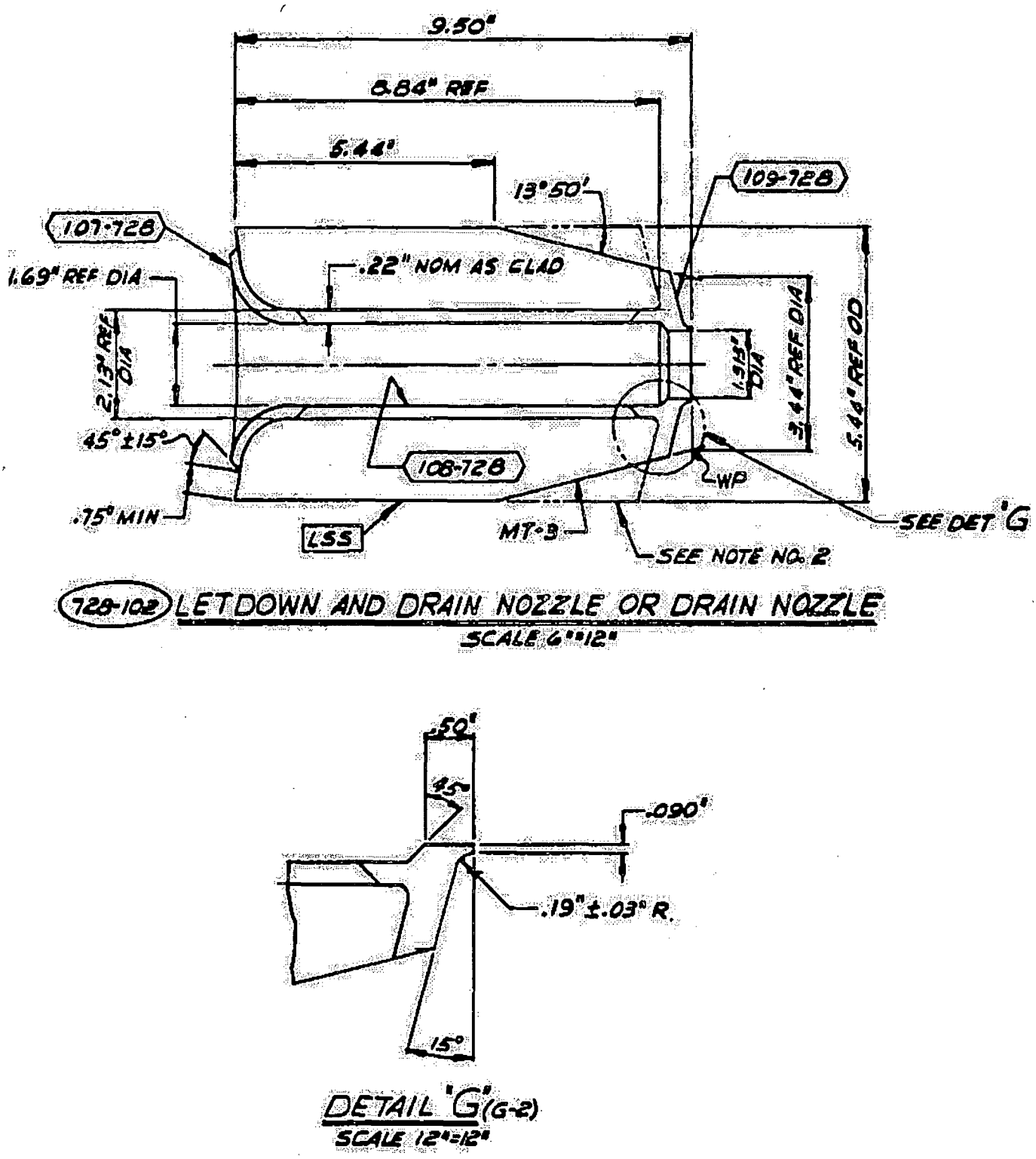

Figure 7: Letdown and Drain/Drain Nozzle Final Machining (Typical for all 3 Units)

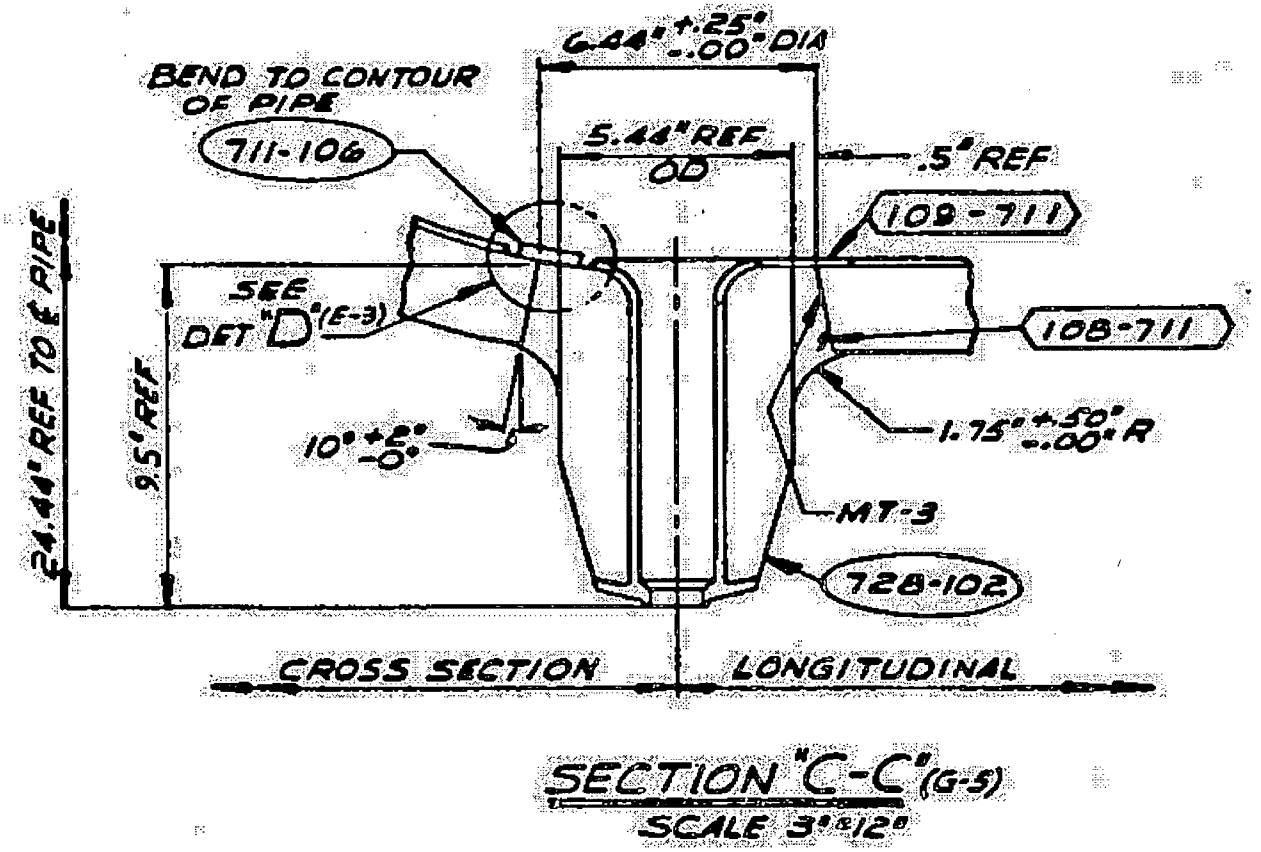

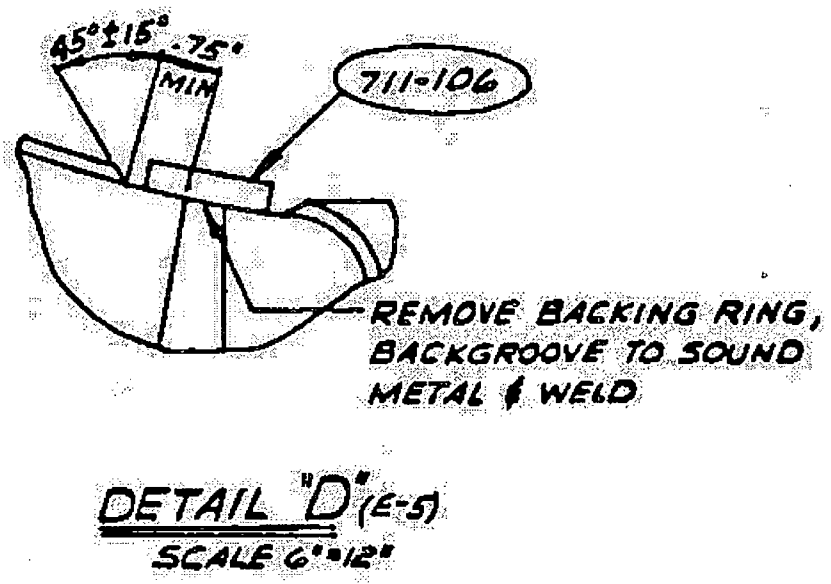

Figure 8: Letdown and Drain / Drain Nozzle Installation (Typical)

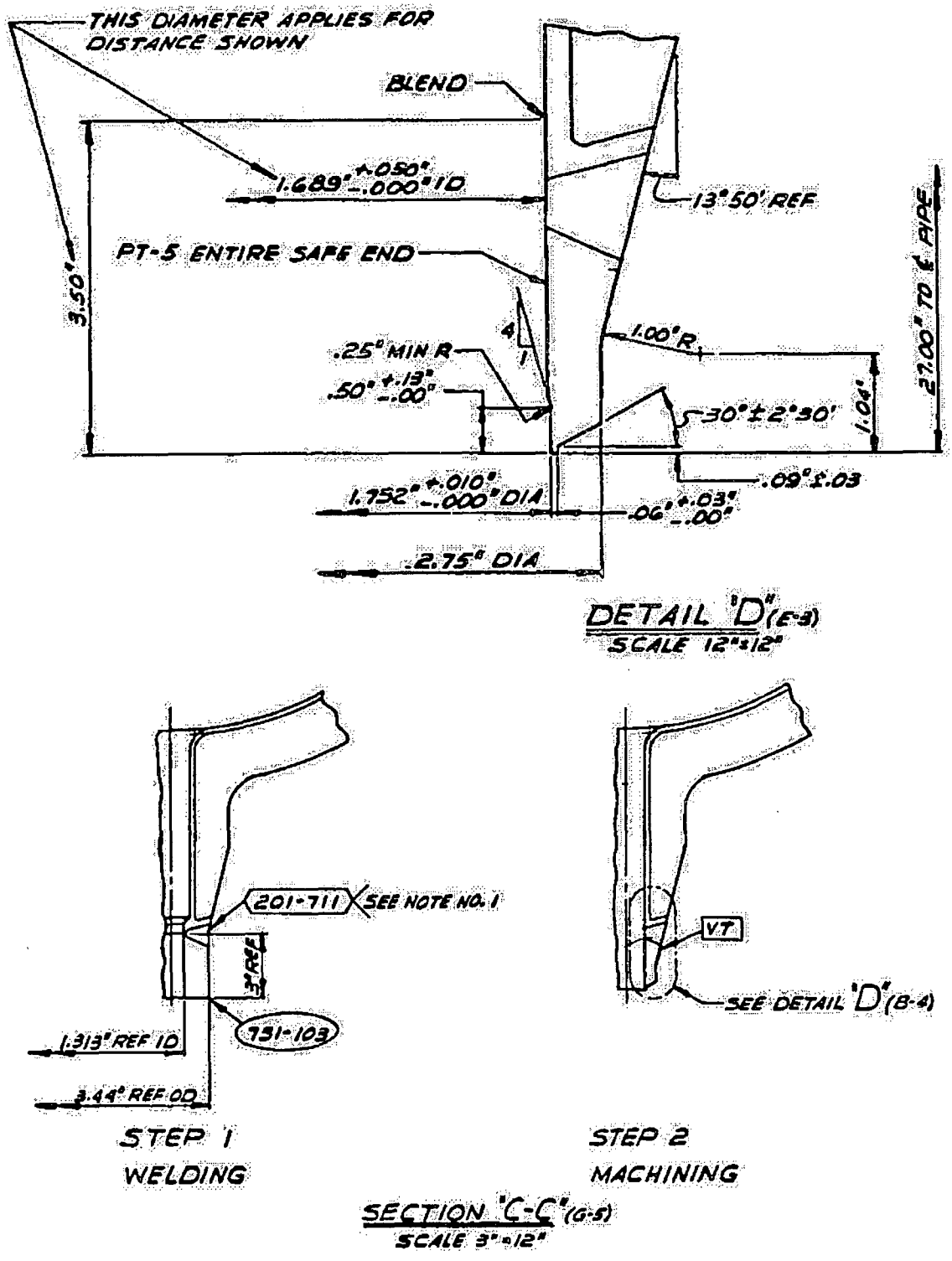

Figure 9: Letdown and Drain/Drain Nozzle and Safe-End Final Machining (Typical)

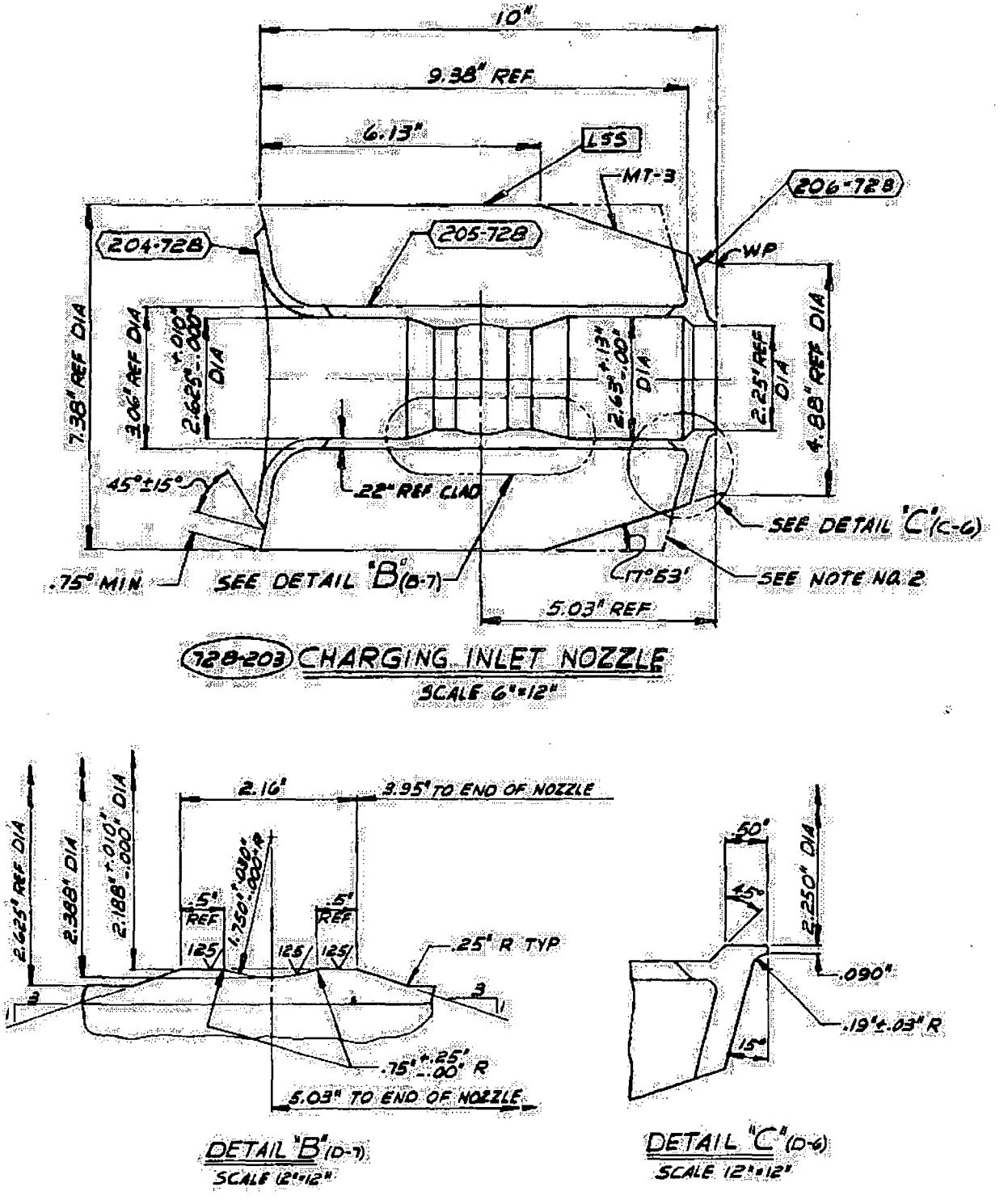

Figure 10: Charging Nozzle Final Machining (Typical for all 3 Units)

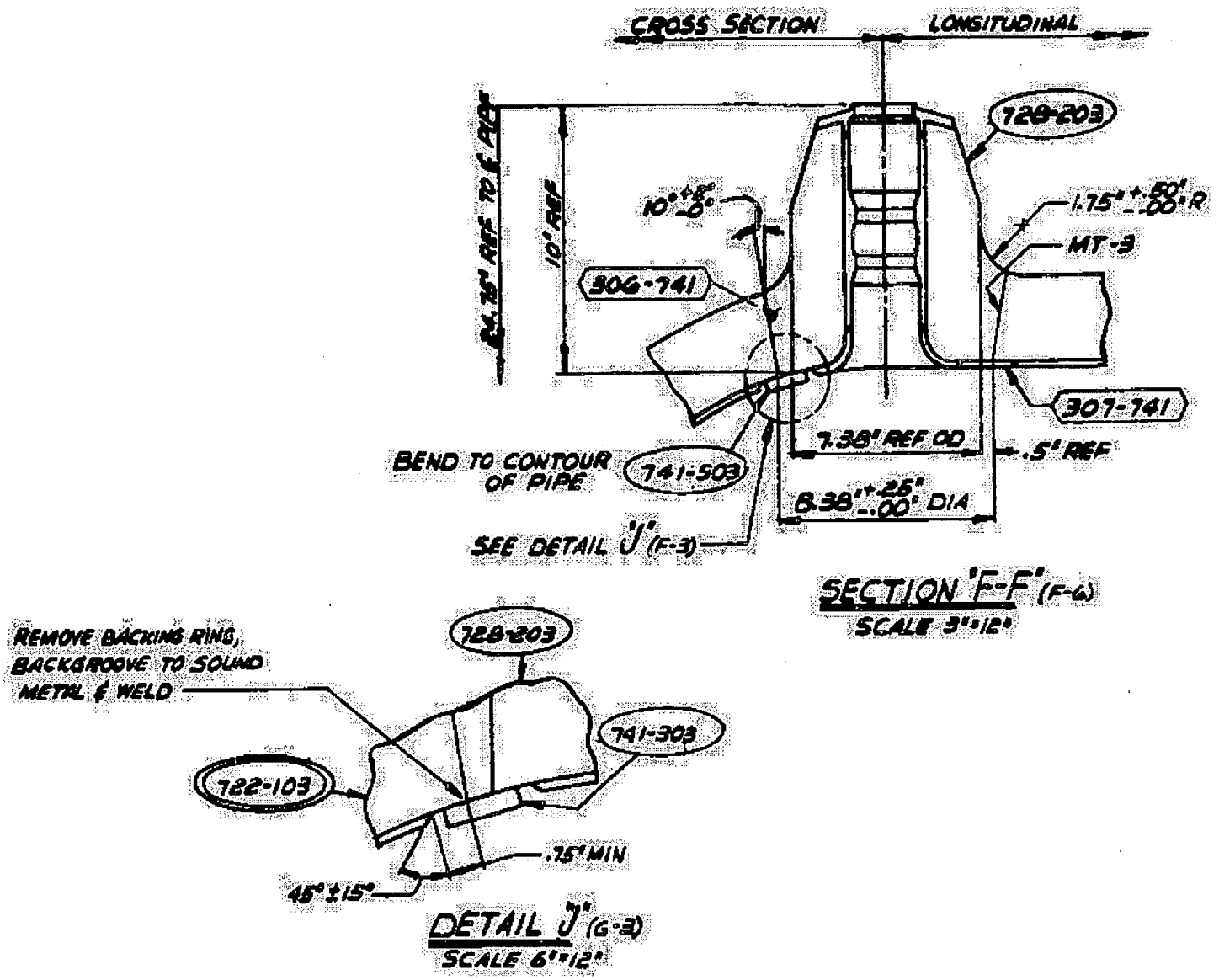

Figure 11: Charging Nozzle Installation (Typical)

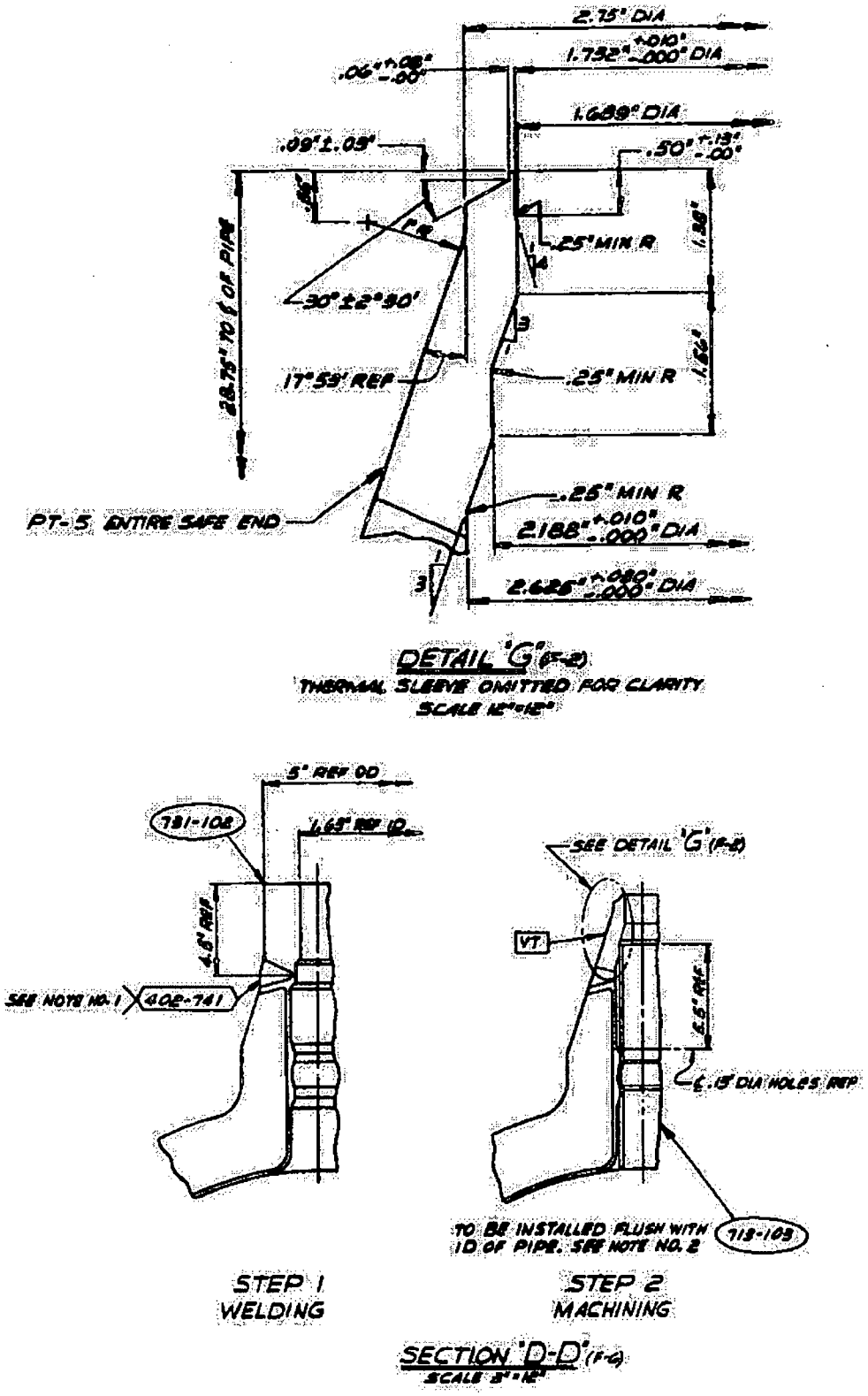

Figure 12: Charging Nozzle and Safe-End Final Machining (Typical)

NRC Question 15
Provide the end date of the third inservice inspection interval for each of the Palo Verde Units.

APS Response

The end date of the third inservice inspection interval for each Palo Verde units is as follows:

Unit 1 - July 17, 2018
Unit 2 - March 17, 2017
Unit 3 - January 10, 2018

ENCLOSURE 2

Relief Request 36, Revision 1, Updated to Reflect the Changes Described in Enclosure 1

Background

In preparation for the 2009 fall outage and pursuant to 10 CFR 50.55a(a)(3)(i), Arizona Public Service Company (APS) is re-submitting Relief Request 36 as Relief Request 36, Revision 1. Revision 1 of Relief Request 36 adds 11 dissimilar metal welds located in the cold leg loops of Palo Verde Units 1, 2, and 3. The additional welds are listed in Section 1.0 of the request.

The proposed alternatives to the requirements of the ASME Boiler and Pressure Vessel Code, 2001 Edition, 2003 Addenda, Section XI, "Rules for Inservice Inspection of Nuclear Power Plant Components" contained in this submittal, Revision 1, are identical to those submitted by letters dated February 8, May 16, and June 18, 2007, and letter dated May 8, 2008, and approved by the NRC on June 21, 2007, and November 10, 2008. Changes from the APS submittal of May 8, 2008, have been identified with a revision bar. Revision 1 of Relief Request 36 proposes alternatives to Section IWA-4410 which stipulates that weld repairs be performed in accordance with Sub-article IWA-4400 and IWA-4420 which requires that defects be removed or reduced to an acceptable size. The proposed alternative is the application of full-structural weld overlay which is discussed in Section 5.0 of this enclosure. Attachment 1 contains the Ambient Temperature Temper Bead Welding procedure that will be used and Attachment 2 contains a comparison of the APS proposed alternative verses Code Cases N-504-3 and N-638-1. Any required material tables and drawings of the proposed weld overlays will be available on-site prior to the application of the overlay.

In developing the original Relief Request 36, APS reviewed NRC questions and Licensee responses to similar ASME alternatives. APS provided responses to those questions in Attachment 3 of the previous two submittals. Since the responses would not be significantly changed by this revision, those questions and answers have not been included in this submittal.

A full-structural weld overlay (FSWOL) has been completed in all 3 Palo Verde units on the following dissimilar metal welds using Relief Request 36.

U-1	Description	Zone	Size	DM Weld Item Number	SM Weld Item Number
Pressurizer	Spray nozzle to safe end	29	4	5-33	29-1
Pressurizer	Safety nozzle to safe end	31	6	5-32	31-13
Pressurizer	Safety nozzle to safe end	31	6	5-29	31-1
Pressurizer	Safety nozzle to safe end	31	6	5-30	31-5
Pressurizer	Safety nozzle to safe end	31	6	5-31	31-9
Pressurizer	Surge nozzle to safe end	20	12	5-34	20-1
RC Pipe	Surge nozzle to safe end	20	12	6-4	20-11
RC Pipe	SDC nozzle to safe end	21	16	6-11	21-20
RC Pipe	SDC nozzle to safe end	22	16	7-9	22-1

U-2	Description	Zone	Size	DM Weld Item Number	SM Weld Item Number
Pressurizer	Spray nozzle to safe end	29	4	5-33	29-1
Pressurizer	Safety nozzle to safe end	31	6	5-32	31-13
Pressurizer	Safety nozzle to safe end	31	6	5-29	31-1
Pressurizer	Safety nozzle to safe end	31	6	5-30	31-5
Pressurizer	Safety nozzle to safe end	31	6	5-31	31-9
Pressurizer	Surge nozzle to safe end	20	12	5-34	20-1
RC Pipe	Surge nozzle to safe end	20	12	6-10	20-11
RC Pipe	SDC nozzle to safe end	21	16	6-11	21-20
RC Pipe	SDC nozzle to safe end	22	16	7-9	22-1

U-3	Description	Zone	Size	DM Weld Item Number	SM Weld Item Number
Pressurizer	Spray nozzle to safe end	29	4	5-33	29-1
Pressurizer	Safety nozzle to safe end	31	6	5-32	31-13
Pressurizer	Safety nozzle to safe end	31	6	5-29	31-1
Pressurizer	Safety nozzle to safe end	31	6	5-30	31-5
Pressurizer	Safety nozzle to safe end	31	6	5-31	31-9
Pressurizer	Surge nozzle to safe end	20	12	5-34	20-1
RC Pipe	Surge nozzle to safe end	20	12	6-10	20-11
RC Pipe	SDC nozzle to safe end	21	16	6-11	21-20
RC Pipe	SDC nozzle to safe end	22	16	7-9	22-1

1.0 ASME Code Components Affected

PVNGS Unit: 1, 2, and 3
Description: Category B-J welds
Item numbers: B9.11
Code Class: 1

Cold Leg Category B-J Welds

U-1	Description	Zone	Size	DM Weld Item Number	SM Weld Item Number
Cold Leg	SI 1A nozzle to safe end	23	14	9-10	23-1
Cold Leg	SI 1B nozzle to safe end	24	14	11-10	24-1
Cold Leg	SI 2A nozzle to safe end	25	14	13-10	25-1
Cold Leg	SI 2B nozzle to safe end	26	14	15-9	26-1
Cold Leg	PZR Spray 1A nozzle to safe end	27	3	9-11	27-44
Cold Leg	PZR Spray 1B nozzle to safe end	28	3	11-11	28-45
Cold Leg	Drain Line 1A nozzle to safe end	32	2	8-18	32-1
Cold Leg	Drain Line 1B nozzle to safe end	33	2	10-18	33-1
Cold Leg	Drain Line 2A nozzle to safe end	34	2	12-18	34-1
Cold Leg	Letdown Line nozzle to safe end	36	2	14-18	36-1
Cold Leg	Charging Line nozzle to safe end	37	2	13-11	37-34

U-2	Description	Zone	Size	DM Weld Item Number	SM Weld Item Number
Cold Leg	SI 1A nozzle to safe end	23	14	9-10	23-1
Cold Leg	SI 1B nozzle to safe end	24	14	11-10	24-1
Cold Leg	SI 2A nozzle to safe end	25	14	13-10	25-1
Cold Leg	SI 2B nozzle to safe end	26	14	15-9	26-1
Cold Leg	PZR Spray 1A nozzle to safe end	27	3	9-11	27-44
Cold Leg	PZR Spray 1B nozzle to safe end	28	3	11-11	28-45
Cold Leg	Drain Line 1A nozzle to safe end	32	2	8-18	32-1
Cold Leg	Drain Line 1B nozzle to safe end	33	2	10-18	33-1
Cold Leg	Drain Line 2A nozzle to safe end	34	2	12-18	34-1
Cold Leg	Letdown Line nozzle to safe end	36	2	14-18	36-1
Cold Leg	Charging Line nozzle to safe end	37	2	13-11	37-34

U-3	Description	Zone	Size	DM Weld Item Number	SM Weld Item Number
Cold Leg	SI 1A nozzle to safe end	23	14	9-10	23-1
Cold Leg	SI 1B nozzle to safe end	24	14	11-10	24-1
Cold Leg	SI 2A nozzle to safe end	25	14	13-10	25-1
Cold Leg	SI 2B nozzle to safe end	26	14	15-9	26-1
Cold Leg	PZR Spray 1A nozzle to safe end	27	3	9-11	27-44
Cold Leg	PZR Spray 1B nozzle to safe end	28	3	11-11	28-45
Cold Leg	Drain Line 1A nozzle to safe end	32	2	8-18	32-1
Cold Leg	Drain Line 1B nozzle to safe end	33	2	10-18	33-1
Cold Leg	Drain Line 2A nozzle to safe end	34	2	12-18	34-1
Cold Leg	Letdown Line nozzle to safe end	36	2	14-18	36-1
Cold Leg	Charging Line nozzle to safe end	37	2	13-11	37-34

2.0 Applicable Code Edition and Addenda

The American Society of Mechanical Engineers (ASME) ISI Code of Record for the third 10-year inservice inspection (ISI) interval is the 2001 Edition and Addenda through 2003.

As allowed by 10 CFR 50.55a, ASME Section XI, 2001 Edition will be used for Appendix VIII, "Performance Demonstration for Ultrasonic Examinations."

3.0 Applicable Code Requirements

Subarticle IWA-4410 of ASME Section XI requires that repairs of welds shall be performed in accordance with Sub-article IWA-4400. IWA-4420 requires that defects be removed or reduced to an acceptable size. The following Code Cases form the basis of the proposed alternative and Attachment 2 contains a comparison of the APS proposed alternative versus the Code Cases:

- Code Case N-504-3[1], "Alternative Rules for Repair of Class 1, 2 and 3 Austenitic Stainless Steel Piping, Section XI, Division 1," with the requirements of ASME Section XI, Non-

[1] Regulatory Guide 1.147, Revision 15, Table 2 identifies this Code Case as conditionally acceptable.

mandatory Appendix Q, "Weld Overlay Repair of Class 1, 2 and 3 Austenitic Stainless Steal Piping Weldments."

- Code Case N-638-1[2], "Similar and Dissimilar Metal Welding using Ambient Temperature Machine GTAW Temper Bead Technique."

4.0 Reason for Request

Primary Water Stress Corrosion Cracking (PWSCC) has been identified as a degradation mechanism for Alloy 82/182 welds and weld buttering. APS has concluded that the application of a FSWOL over the Alloy 82/182 welds is an appropriate course of action to ensure the integrity of the reactor coolant pressure boundary.

The 2001 Edition and Addenda through 2003 of the Code does not provide rules for the design of weld overlays or for repairs without removal of flaws. In addition, Code Case N-504-3[3], which had been approved by the NRC for use, does not provide the methodology for overlaying nickel alloy welds joining austenitic and ferritic base materials; therefore, APS proposes the following alternative.

5.0 Proposed Alternative and Basis for Use

Proposed Alternative

A FSWOL is one of the repair methods that may be required to be applied to any of the Alloy 82/182 dissimilar metal welds identified in Section 1.0 of this request. If a FSWOL is to be applied to any of these welds, a flaw will be assumed to be 100% through the original wall thickness for the entire circumference of the FSWOL design.

In some cases, the application of a FSWOL on a weld identified in Section 1.0 may preclude the examination of an adjacent similar metal piping weld. In those cases, the overlay will be extended over the adjacent similar metal piping welds. Which similar metal welds will be overlaid will be determined after designing the dimensions of the dissimilar metal FSWOL.

Similar metal welds will not be inspected prior to installing the overlay. If the overlay extends over adjacent similar metal welds, then these welds will be examined in accordance with the proposed alternative. In addition, the overlays will be designed to improve the weld configurations for future examinations.

In lieu of using the existing IWA-4000 Repair Procedures in the 2001 Edition and Addenda through 2003 Section XI Code, APS proposes to use the following alternative for the design, fabrication, pressure testing, and examination of the weld overlays. This will provide an acceptable methodology for reducing a defect in austenitic nickel alloy welds to an acceptable size by increasing the wall thickness through deposition of a weld overlay. ASME Code references in this alternative are to the 2001 Edition and Addenda through 2003 for Section III and 2001 Edition and Addenda through 2003 for Section XI as modified by 10 CFR 50.55a.

---

[2] Regulatory Guide 1.147 Revision 15 , Table 2, identifies this Code Cases as Conditionally Acceptable.

[3] Code Case N-504-2 was used in the original submittal of Relief Request 36.

This methodology is based on ASME Code Case N-740 and only the applicable requirements of the Code Case are presented below as alternatives.

5.1 General Requirements:

(a) A full-structural weld overlay will be applied by deposition of Alloy 52 weld reinforcement (weld overlay) on the outside surface of the carbon steel (P-No. 1 or P-No. 3) to the stainless steel safe end (P-No. 8), inclusive of the Alloy 82/182 weld that joins the two items. In addition, the overlay will be extended (when required) to include the adjacent wrought stainless steel to stainless steel welds (P-No. 8 to P-No. 8).

There are no requirements specified in this proposed alternative for these stainless steel to stainless steel welds (such as flaw growth calculations) because they are not susceptible to stress corrosion cracking in a PWR water environment. Specific dimensions of the overlay thickness will be in the design package.

(b) The Alloy 52 weld overlay filler metal is an austenitic nickel alloy having a chromium (Cr) content of at least 28%. The weld overlay is applied 360 degrees around the circumference of the item, e.g., safe end to nozzle weld, and will be deposited using a Welding Procedure Specification (WPS) for groove welding, qualified in accordance with the Construction Code and Owner's requirements and identified in the Repair/Replacement Plan. As an alternative to the post-weld heat treatment requirements of the Construction Code and Owner's requirements, the provisions for Ambient Temperature Temper Bead Welding will be used on the ferritic nozzles. (See "Ambient Temperature Temper Bead Welding," which is located in Attachment 1 to this proposed alternative). The maximum area of an individual weld overlay on the finished surface of the ferritic material shall be no greater than 300 square inches.

(c) Prior to deposition of the weld overlay, the surface will be examined by the liquid penetrant method. Indications larger than 1/16-inch shall be removed, reduced in size, or corrected in accordance with the following requirements.

1. One or more layers of weld metal shall be applied to seal unacceptable indications in the area to be repaired with or without excavation. The thickness of these layers shall not be used in meeting weld reinforcement design thickness requirements. Peening the unacceptable indication prior to welding is permitted.

2. If correction of indications identified in 5.1(c) is required, the area where the weld overlay is to be deposited, including any local repairs or initial weld overlay layer, shall be examined by the liquid penetrant method. The area shall contain no indications greater than 1/16-inch prior to the application of the structural layers of the weld overlay.

(d) Weld overlay deposits shall meet the following requirements:

The austenitic nickel alloy weld overlay shall consist of at least two weld layers deposited using a filler material identified in 5.1(b) above. The first layer of weld metal deposited will not be credited toward the required thickness because of chemical dilution.

Alternatively, the first layer may be credited toward the required thickness, provided the portion of the layer over the austenitic base material, austenitic filler material weld and the

associated dilution zone from an adjacent ferritic base material contains at least 24% Cr. The Cr content of the deposited weld metal shall be at least 24%. Content may be determined by chemical analysis of the production weld or of a representative coupon taken from a mockup prepared in accordance with the WPS for the production weld.

(e) Welding will only be performed for applications predicted not to have exceeded a thermal neutron fluence of 1×10^{17} (E< 0.5 eV) neutrons per cm^2 prior to welding.

5.2 Crack Growth Considerations and Design

(a) Crack Growth Considerations

Crack growth calculations will be performed as part of a design package. Flaw characterization and evaluation requirements shall be based on the as-found flaw in the case of a contingency overlay. For a preemptive overlay, a flaw in the original dissimilar metal weld with a depth of 75% and a circumference of 360 degrees that originates from the inside of the pipe is postulated for crack growth purposes. A 75% through-wall depth flaw is the largest flaw that could remain undetected during the FSWOL preservice examination. This preservice examination will verify there is no cracking in the upper 25% of the original weld wall thickness, and thus verify that the assumption of a 75% through-wall crack is conservative. However, if any crack-like flaws are found during the preservice examination in the upper 25% of the original weld or base materials, the as-found flaw (postulated 75% through wall, plus the portion of the flaw in the upper 25%) would be used for the crack growth analysis. The size of all flaws will be projected to the end of the design life of the overlay or until the next scheduled inservice inspection. Crack growth, including both stress corrosion and fatigue crack growth, shall be evaluated in the materials in accordance with IWB-3640. If the flaw is at or near the boundary of two different materials, evaluation of flaw growth shall consider the most limiting of the two materials.

(b) Design of the FSWOL

The design of the weld overlay shall satisfy the following, using the assumptions and flaw characterization restrictions in 5.2(a) above. The following design analysis shall be completed in accordance with IWA-4311.

1. The axial length and end slope of the weld overlay shall cover the weld and the heat affected zones on each side of the weld, and shall provide for load redistribution from the item into the weld overlay and back into the item without violating applicable stress limits of ASME Section III, NB-3200. Any laminar flaws in the weld overlay shall be evaluated in the analysis to ensure that load redistribution complies with the above. These requirements will usually be satisfied if the weld overlay full thickness length extends axially beyond the projected flaw by at least $0.75\sqrt{Rt}$, where R is the outer radius of the item and t is the nominal wall thickness of the item.

2 Unless specifically analyzed in accordance with 5.2(b)1 above, the end transition slope of the overlay shall not exceed 45 degrees.

3. The thickness of the FSWOL shall be determined based on a flaw 100% through the original wall thickness for the entire circumference in the underlying pipe. The overlay

will be applied so that the criteria of IWB-3640 are met for the assumed flaw after the overlay is applied.

4. The effects of any changes in applied loads, as a result of weld shrinkage from the entire overlay, on other items in the piping system (e.g., support loads and clearances, nozzle loads, changes in system flexibility and weight due to the weld overlay) shall be evaluated. (There are no pre-existing flaws previously accepted by analytical evaluation in the Palo Verde welds to be considered in this evaluation).

   i. Prior to plant restart following the outage, a stress analysis will be performed that demonstrates that the nozzles will perform their intended design function with the FSWOL installed. The stress analysis report will include results showing that the requirements of Subarticles NB-3200 and NB-3600 of the ASME Code, Section III are satisfied. The stress analysis will also include results showing that the requirements of IWB-3000 of the ASME Code, Section XI, are satisfied. The results will show that the postulated crack including its growth in the nozzles will not adversely affect the integrity of the overlaid welds. This analysis will be performed as part of the overlay design package and will be available for NRC review.

   ii. The original leak-before-break (LBB) analyses will be confirmed to remain valid after the weld overlays are applied, the amount of shrinkage is determined, and the shrinkage stresses are calculated.

5.3 Examination and Inspection

In lieu of all other examination requirements, the examination requirements proposed herein shall be met. Nondestructive examination methods shall be in accordance with IWA-2200, except as specified herein. Nondestructive examination personnel shall be qualified in accordance with IWA-2300. Ultrasonic examination procedures and personnel shall be qualified in accordance with Appendix VIII, Section XI, as implemented through the EPRI Performance Demonstration Initiative (PDI).

The PDI Program Status for Code Compliance and Applicability developed in June 2005 indicates that the PDI Program is in compliance with Appendix VIII, 2001 Edition of Section XI as amended by 10 CFR 50.55a, Final Rule dated October 1, 2004. Ultrasonic examination will be performed to the maximum extent achievable.

Pre-Overlay Examinations

APS does not plan to perform UT of the dissimilar metal welds or the adjacent similar metal welds identified in the scope of this request prior to the installation of the overlays. Since APS intends to apply full-structural overlays designed for a worst case through-wall flaw that is 360 degrees in circumference, the dose received from the examination of these welds would result in a hardship without a compensating increase in the level of quality and safety.

Post-Overlay Examinations

There are two examinations to be performed after the overlay is installed, the acceptance examination of the overlay and the preservice examination. The purpose of the acceptance examination is to assure a quality overlay was installed. The purpose of the preservice

examination is to provide a baseline for future examinations and to locate and size any cracks that might have propagated into the upper 25% of the original wall thickness and to evaluate them accordingly. While listed below as two separate examinations they will be performed during the same time period. An identification of the examination coverage of each overlay will be developed and available for NRC review prior to plant startup.

The NDE requirements listed below cover the area that will be affected by the application of the overlay. Any PWSCC degradation would be in the alloy 82/182 weld or the adjacent heat affected zone (HAZ). Further, the original weld and adjacent base materials have received a radiographic examination (RT) during installation. The proposed surface and volumetric examinations provide adequate assurance that any defects produced by welding of the overlay or by extension of pre-existing defects will be identified.

(a) Acceptance Examination

1. The weld overlay shall have a surface finish of 250 micro-inches RMS or better and a flatness sufficient to allow for adequate examination in accordance with procedures qualified per Appendix VIII. The weld overlay shall be examined to verify acceptable configuration.

2. The weld overlay and the adjacent base material for at least 1/2 inch from each side of the weld shall be examined using the liquid penetrant method. The weld overlay shall satisfy the surface examination acceptance criteria for welds of the Construction Code or ASME Section III, NB-5300. The adjacent base metal shall satisfy the surface examination acceptance criteria for base material of the Construction Code or ASME Section III, NB-2500. If ambient temperature temper bead welding is used, the liquid penetrant examination shall be conducted at least 48 hours after the completion of the third layer of the weld overlay in accordance with Relief Request 37.

3. The examination volume A-B-C-D in Figure 1 below shall be ultrasonically examined to assure adequate fusion (i.e., adequate bond) with the base metal and to detect welding flaws, such as interbead lack of fusion, inclusions, or cracks. The interface C-D shown between the overlay and the weld includes the bond and the heat affected zone from the overlay. If ambient temperature temper bead welding is used, the UT shall be conducted at least 48 hours after the completion of the third layer of the weld overlay in accordance with Relief Request 37.

4. Planar flaws shall meet the preservice examination standards of Table IWB-3514-2. In applying the acceptance standards, wall thickness "t_w" shall be the thickness of the weld overlay. For weld overlay examination volumes with unacceptable indications, the unacceptable indications will be removed and the volume will be re-welded. Re-examination per IWB-2420 is not required because unacceptable indications will be removed and the volume will be re-welded.

5. Laminar flaws shall meet the acceptance standards of Table IWB-3514-3 with the additional limitation that the total laminar flaw shall not exceed 10% of the weld surface area and that no linear dimension of the laminar flaw area exceeds 3.0 inches. Additional requirements are:

i. The reduction in coverage of the examination volume in the aforementioned Figure 1 due to laminar flaws shall be less than 10%. The dimensions of the uninspectable volume are dependent on the coverage achieved with the angle beam examination of the overlay.

ii. Any uninspectable volume in the weld overlay shall be assumed to contain the largest radial planar flaw that could exist within that volume. This assumed flaw shall meet the inservice examination standards of Table IWB-3514-2. In applying the acceptance standards, wall thickness "t_w" shall be the thickness of the weld overlay. Both axial and circumferential planar flaws shall be assumed.

iii. If the preservice acceptance criteria of Table IWB-3514-2 are not met, the lamination shall be removed or reduced in area such that the assumed flaw is acceptable per IWB-3514-2.

6. After completion of all welding activities, affected restraints, supports, and snubbers shall be VT-3 examined to verify that design tolerances are met.

(b) Preservice Inspection

1. The examination volume A-B-C-D in Figure 2, provided below, shall be ultrasonically examined. The angle beam shall be directed perpendicular and parallel to the piping axis, with scanning performed in four directions, to locate and size any cracks that might have propagated into the upper 25% of the base material or into the weld overlay.

Figure 2:

PRESERVICE AND INSERVICE EXAMINATION VOLUME

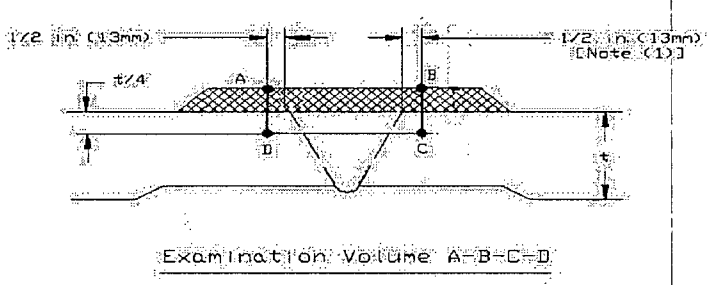

Note 1: For axial or circumferential flaws, the axial extent of the examination volume shall extend at least ½ inch beyond the toes of the original weld, including weld end butter, where applied.

2. The preservice examination acceptance standards of Table IWB-3514-2 shall be applied to planar indications in the weld overlay material. If the indication is found acceptable per Table IWB-3514-2 the weld overlay will be placed in service and the inservice schedule and acceptance criteria of 5.3(c) will be followed. In applying the acceptance standards, wall thickness, t_w, shall be the thickness of the weld overlay. Planar flaws not meeting the preservice acceptance standards of Table IWB-3514-2 shall be repaired. Re-examination per IWB-2420 is not required because unacceptable indications will be removed and the volume will be re-welded.

3. Cracks in the outer 25% of the original wall thickness shall meet the design analysis requirements as addressed in Section 5.2, "Crack Growth Considerations and Design," of this proposed alternative.

(c) Inservice Inspection

APS proposes that the following Inservice Inspection rules be followed.

1. The weld overlay examination volume A-B-C-D in Figure 2 shall be added to the applicable inspection plans and shall be ultrasonically examined during the first or second refueling outage following application.

2. The weld overlay examination volume in Figure 2 shall be ultrasonically examined to determine if any new or existing cracks have propagated into the upper 25% of the base material or into the overlay. The angle beam shall be directed perpendicular and parallel to the piping axis, with scanning performed in four directions.

3. The inservice examination acceptance standards of Table IWB-3514-2 shall be applied to planar indications detected in the weld overlay material. In applying the acceptance standards, the wall thickness, "t_w", shall be the thickness of the weld overlay. If the planar indication is found acceptable per Table IWB-3514-2, the weld overlay will be re-examined in accordance with 5.3(c)5. If the inservice acceptance criteria of Table IWB-3514-2 are not met, the planar flaw may be evaluated in accordance with IWB-3640, provided that the flaw is not caused by PWSCC. If accepted for continued service the weld overlay will be re-examined in accordance with 5.3(c)5. If the flaw is not acceptable for continued service per IWB-3640, then it shall be repaired.

4. Cracks in the outer 25% of the base metal shall meet the design analysis requirements as addressed in Section 5.2, "Crack Growth Considerations and Design," of this proposed alternative. Weld overlay examination volumes that show indication of crack growth or new cracking will be re-examined in accordance with 5.3(c)5. Weld overlay examination volumes that show no indication of crack growth or new cracking shall be placed into a population group for each unit to be examined on a sample basis. Twenty-five percent of this population shall be examined once every ten years.

5. Successive Examinations - The weld overlay examination volume shall be reexamined during the first or second refueling outage following discovery of:
   - Growth of indications in the overlay material or the presence of new indications in the overlay material.
   - Crack growth or new cracking in the outer 25% of the base metal.

(d) Scope Expansion

If inservice examinations reveal an unacceptable indication, crack growth into the weld overlay design thickness, or axial crack growth beyond the specified examination volume, additional weld overlay examination volumes, equal to the number scheduled for the current inspection period, shall be examined prior to return to service. If additional unacceptable indications are found in the second sample, a total of 50% of the total population of weld overlay examination volumes shall be examined prior to operation. If additional unacceptable indications are found, the entire remaining population of weld overlay examination volumes shall be examined prior to return to service.

5.4 Pressure Testing

A system leakage test shall be performed in accordance with IWA-5000.

5.5 Documentation

Use of this proposed alternative shall be documented on ASME Form NIS-2A, "Owner's Report for Repairs or Replacements."

Basis for Use

The use of weld overlay materials resistant to PWSCC (e.g., Alloy 52) that create low tensile or compressive residual stress profiles in the original weld provide increased assurance of structural integrity. The weld overlay is of sufficient thickness and length to meet the applicable stress limits from ASME Section III, NB-3200. Crack growth evaluations for PWSCC and fatigue of any as-found flaws or any conservatively postulated flaws will ensure that structural integrity will be maintained.

As a part of the design of the weld overlay, the weld length, surface finish, and flatness are specified in order to allow qualified ASME Section XI, Appendix VIII UT examinations, as implemented through the EPRI PDI program, of the weld overlay and the required volume of the base material and original weld. The examinations specified in this proposed alternative, versus those limited examinations performed on the original dissimilar metal welds, will provide improved assurance of structural integrity. Further, if no flaws are found in the outer 25% of the original wall thickness by the preservice UT examinations, the postulated 75% through-wall flaw for the preemptive overlays is conservative for crack growth evaluations. If a flaw is detected in the upper 25% of the original material during the preservice examination, the actual flaw size would be used for the crack growth evaluations.

The implementation of the alternative reduces the likelihood for PWSCC in the identified welds and improves piping geometries to permit Appendix VIII UT examinations as implemented through the EPRI PDI program. Weld overlay repairs of dissimilar metal welds have been installed and performed successfully for many years in both PWR and BWR applications. The alternative provides improved structural integrity and reduced likelihood of leakage for the primary system. Accordingly, the use of the alternative provides an acceptable level of quality and safety in accordance with 10 CFR 50.55a(a)(3)(i).

Impact on Leak-Before-Break Analysis

The FSWOL repairs will only be applied to welds that are not credited in the Palo Verde leak-before-break (LBB) analysis. The only welds credited in the LBB analysis are the large piping welds within the main reactor coolant system (RCS) piping which are not dissimilar metal welds as defined by the Materials Reliability Project, MRP-139, Revision 1, "Primary System Piping Butt Weld Inspection and Evaluation Guideline."

The welds credited in the Palo Verde LBB analysis are:

- Hot leg RCS piping at the Steam Generator
- Hot leg RCS piping at the Reactor Vessel
- Cold leg RCS piping at the Steam Generator
- Cold leg RCS piping at the Reactor Coolant Pump inlet and outlet
- Cold leg RCS piping at the Reactor Vessel

6.0 Duration of Proposed Alternative

The proposed alternative requested would be applicable for the remainder of the third Inservice Inspection Interval for Units 1, 2, and 3.

7.0 Conclusion

10 CFR 50.55a(a)(3) states:

"Proposed alternatives to the requirements of paragraphs (c), (d), (e), (f), (g), and (h) of this section or portions thereof may be used when authorized by the Director of the Office of Nuclear Reactor Regulation. The applicant shall demonstrate that:

(i) The proposed alternatives would provide an acceptable level of quality and safety, or
(ii) Compliance with the specified requirements of this section would result in hardship or unusual difficulty without a compensating increase in the level of quality and safety."

The post-overlay examinations and stress analysis, conducted prior to plant restart, discussed in this relief request provide an acceptable level of quality and safety. Additionally, not performing some volumetric examinations prior to applying the FSWOL will reduce the dose to examination personnel and keep exposure ALARA. Therefore, APS requests that the proposed alternative be authorized pursuant to 10 CFR 50.55a(a)(3)(i).

APS requests the Staff's approval of this Relief Request to support the Unit 2's fall 2009 refueling outage, U2R15. Approval is requested by October 3, 2009.

8.0 References

1. ASME Boiler and Pressure Vessel Code, Code Case N-740
2. ASME Boiler and Pressure Vessel Code, Code Case N-504-2
3. ASME Boiler and Pressure Vessel Code, Code Case N-638-1

9.0 Precedent

- Palo Verde Units 1, 2, and 3 – Relief Request Nos. 36 and 37 Re: Alterations to Weld Overlay Requirements for Inservice Inspection (TAC Nos. MD4272, MD4273, MD4274, MD5579, MD5580, and MD5581), Approved June 21, 2007 (Agencywide Documents Access and Management System [ADAMS] No. ML071560008).

- Palo Verde Units 1, 2, and 3 – Relief Request Nos. 18 and 36 Re: Third 10-Year Inservice Inspection Program Interval (TAC Nos. MD8712, MD8713, and MD8714), Approved November 10, 2008 (ADAMS No. ML08301572).

There are no technical differences between the previously approved requests and this submittal.

RELIEF REQUEST 36, Revision 1

ATTACHMENT 1

AMBIENT TEMPERATURE TEMPER BEAD WELDING

Ambient Temperature Temper Bead Welding

1.0 GENERAL REQUIREMENTS

(a) This appendix applies to dissimilar austenitic filler metal welds joining P-Nos. 8 or 43 materials to P-No. 1 and 3 materials.

(b) The maximum area of an individual weld overlay based on the finished surface over the ferritic base material shall be 300 square inches.

(c) Repair/replacement activities on a dissimilar-metal weld in accordance with this Appendix are limited to those along the fusion line of a nonferritic weld to ferritic base material on which 1/8-inch, or less of nonferritic weld deposit exists along the original fusion line.

(d) If a defect penetrates into the ferritic base material, repair of the base material, using a nonferritic weld filler material, may be performed in accordance with this Appendix, provided the depth of repair in the base material does not exceed 3/8-inch.

(e) Prior to welding the area to be welded, a band around the area of at least 1-1/2 times the component thickness or 5 inches, whichever is less, shall be at least 50 degrees Fahrenheit.

(f) Welding materials shall meet the Owner's Requirements and the Construction Code and Cases specified in the Repair/Replacement Plan. Welding materials shall be controlled so that they are identified as acceptable until consumed.

(g) Peening may be used, except on the initial and final layers.

2.0 WELDING QUALIFICATIONS

The welding procedures and the welding operators shall be qualified in accordance with ASME Section IX and the requirements of 2.1 and 2.2 provided below.

2.1 Procedure Qualification

(a) The base materials for the welding procedure qualification shall be of the same P-Number and Group Number, as the materials to be welded. The materials shall be postweld heat treated to at least the time and temperature that was applied to the materials being welded.

(b) The root width and included angle of the cavity in the test assembly shall be no greater than the minimum specified for the repair.

(c) The maximum interpass temperature for the first three layers of the test assembly shall be 150 degrees Fahrenheit.

(d) The test assembly cavity depth shall be at least 1 inch. The test assembly thickness shall be at least twice the test assembly cavity depth. The test assembly shall be large enough to permit removal of the required test specimens. The test assembly dimensions surrounding the cavity shall be at least the test assembly thickness and at least 6 inches. The qualification test plate shall be prepared in accordance with Figure 1-1.

(e) Ferritic base material for the procedure qualification test shall meet the impact test requirements of the Construction Code and Owner's Requirements. The location and orientation of the test specimens shall be similar to those required in (f) below, but shall be in the base metal.

(f) Charpy V-notch tests of the ferritic heat-affected zone (HAZ) shall be performed at the same temperature as the base metal test of (e) above. Number, location, and orientation of test specimens shall be as follows:

(i) The specimens shall be removed from a location as near as practical to a depth of one-half the thickness of the deposited weld metal. The coupons for HAZ impact specimens shall be taken transverse to the axis of the weld and etched to define the HAZ. The notch of the Charpy V-notch specimen shall be cut approximately normal to the material surface in such a manner as to include as much HAZ as possible in the resulting fracture. When the material thickness permits, the axis of a specimen shall be inclined to allow the root of the notch to be aligned parallel to the fusion line.

(ii) If the test material is in the form of a plate or a forging, the axis of the weld shall be oriented parallel to the principal direction of rolling or forging.

(iii) The Charpy V-notch test shall be performed in accordance with ASME Section II, Part A, SA-370. Specimens shall be in accordance with SA-370, Figure 11, Type A. The test shall consist of a set of three full-size 10 mm X 10 mm specimens. The lateral expansion, percent shear, absorbed energy, test temperature, orientation and location of all test specimens shall be reported in the Procedure Qualification Record.

(g) The average lateral expansion value of the three HAZ Charpy V-notch specimens shall be equal to or greater than the average lateral expansion value of the three unaffected base metal specimens.

2.2 Performance Qualification

Welding operators shall be qualified in accordance with ASME Section IX.

3.0 WELDING PROCEDURE REQUIREMENTS

The welding procedure shall include the following requirements.

(a) The weld metal shall be deposited by the automatic or machine GTAW process.

(b) Dissimilar metal welds shall be made using F-No. 43 weld metal (ASME Section IX QW-432) for P-No. 8 or 43 to P-No. 1 and 3 weld joints.

(c) The area to be welded shall be buttered with a deposit of at least three layers to achieve at least 1/8-inch overlay thickness with the heat input for each layer controlled to within ±10% of that used in the procedure qualification test. Particular care shall be taken in the placement of the weld layers of the austenitic overlay filler material at the toe of the overlay to ensure that the HAZ and ferritic base metal are tempered. Subsequent layers shall be deposited with a heat input not exceeding that used for layers beyond the third layer in the procedure qualification.

(d) The maximum interpass temperature for field applications shall be 350 degrees Fahrenheit for all weld layers regardless of the interpass temperature used during qualification.

(e) The interpass temperature shall be determined by temperature measurement (e.g., pyrometers, temperature indicating crayons, thermocouples) during welding. If it is not possible to use this method then (e)(1) and (e)(2) may be used in combination.

(1) heat flow calculations using the variables listed below as a minimum:
   (i) welding heat input
   (ii) initial base material temperature
   (iii) configuration, thickness, and mass of the item being welded
   (iv) thermal conductivity and diffusivity of the materials being welded
   (v) arc time per weld pass and delay time between each pass
   (vi) arc time to complete the weld

(2) measurement of the maximum interpass temperature on a test coupon that is equal to or less than the thickness of the item to be welded. The maximum heat input of the welding procedure shall be used in the welding of the test coupon.

Ambient Temperature Temper Bead Welding

(f) Particular care shall be given to ensure that the weld region is free of all potential sources of hydrogen. The surfaces to be welded, filler metal, and shielding gas shall be suitably controlled.

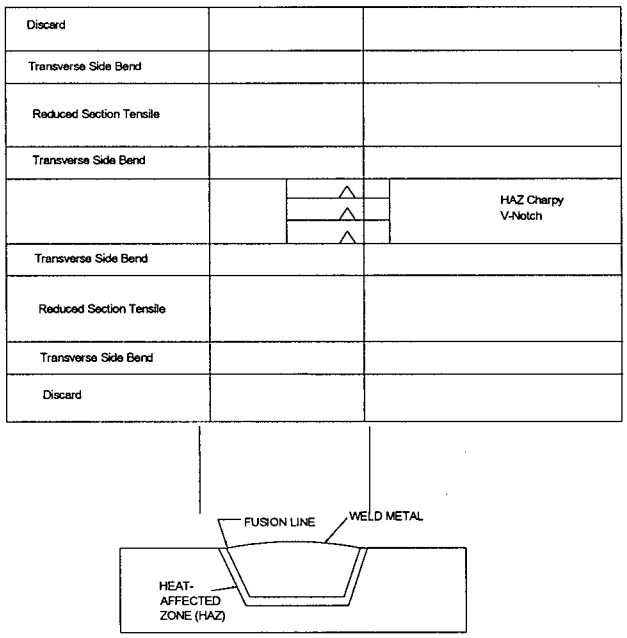

GENERAL NOTE: Base metal Charpy impact specimens are not shown. This figure illustrates a similar-metal weld.

Figure 1-1
QUALIFICATION TEST PLATE

RELIEF REQUEST 36, Revision 1

ATTACHMENT 2

COMPARISON OF APS-PROPOSED ALTERNATIVE VERSUS CODE CASES N-504-3 and N-638-1

Comparison of APS Proposed Alternative Verses Code Cases N-504-2 and N-638-1

Comparison of Proposed Alternative with N-504-3	
CODE CASE N-504-3	**PROPOSED ALTERNATIVE**
N-504-2 for weld overlay repair of SS piping	Proposed alternative is for dissimilar metal weld overlay repairs.
Reply-reduce a flaw to acceptable size by weld overlay on austenitic SS piping	*Reply*- reduce a flaw to acceptable size by weld overlay on austenitic stainless steel or austenitic nickel alloy piping, components and associated welds
Material covered is P-8	Per Section 1.0(a) materials covered are P-8, P-43, P-3 and P-1. Also includes P-8 to P-43, P-8 to P-8 or P-43 to P-43 joined with austenitic filler materials
(b) Filler Material – low C (0.035% max) SS	(b) Austenitic nickel alloy (28% Cr min.)
(c) (d) Repair of indications prior to overlay	(c) Repair of indications prior to overlay (Same as N-504-3)
(e) Weld Reinforcement Min. 2 layers with-7.5 FN. In first austenitic SS layer 5 FN acceptable by evaluation.	(d) Weld Reinforcement (1) Minimum of 2 layers.
(f) (g) Design – Requires flaw evaluation of the existing flaw based on IWB-3640 for design life. Requires postulated 100% through wall for design of the weld overlay (full-structural) except for four or fewer axial flaws. Meet ASME Section III for primary local and bending stresses and secondary peak stresses. Requires end transition slope less than 45 degrees. Axial length requirement usually met if overlay 0.75 $(Rt)^{1/2}$ beyond flaws. Shrinkage and other applied loads evaluated on other items and other flawed welds in system.	2.0 Design Requires flaw evaluation of the existing flaw based on IWB-3640. Flaw evaluation of both materials required if flaw is at or near the boundary. Requires postulated 100% through wall for design (full-structural) of the weld overlay. Axial length and end slope shall cover the weld and heat affected zones and shall provide for load redistribution into the item and back into the overlay either out violating stress limits. There is no exception for four or fewer axial flaws. Design analysis per IWA-4311. Meet ASME Section III, NB-3200 applicable stress limits. Any laminar flaws in the weld overlay evaluated to ensure load distribution meets NB-3200. Same as N-504-3 for shrinkage and evaluation of other existing flaws.

Comparison of Proposed Alternative with N-504-3 (Continued)	
N-504-3	**PROPOSED ALTERNATIVE**
(i) No specific reference given for acceptance examination of the weld overlay. Acceptance criteria of the Construction Code and Section III would be applicable. (Causes problems with volumetric acceptance criteria since construction criteria based on RT examination rather than UT examination. Also presents difficulty in determining applicable criteria for laminar flaws in the overlay) Preservice exams to the methods of IWB-2200. Exam procedures shall be specified in the Repair Program. Acceptance standard-IWB-3514-2 (planar flaws) and IWB-3514-3 (laminar flaws) provided reduction in coverage due to laminar flaws is less than 10%. UT exams to verify integrity of new applied weld reinforcement. Include upper 25% of pipe wall in the examination.	3.0 Examination and Inspection Examinations in the proposed alternative shall be met in lieu of all other exams. NDE methods to IWA-2200 except as specified in the case. NDE personnel qualified to IWA-2300. UT procedures and personnel qualified to Section XI, Appendix VIII. (a) Acceptance Examinations-Surface finish 250 micro-inch and flatness sufficient to allow adequate examination in accordance with Appendix VIII procedures. PT overlay and ½-inch on either side of the overlay. Acceptance standards for PT-weld overlay, Meet weld Construction Code criteria or NB-5300, base material-Meet base material criteria or NB-2500. 48 hr hold time after item reaches room temperature imposed if ambient temperature temper bead welding imposed. UT examination for acceptance-Figure 1 shows the examination volume. 48 hour hold time after item reaches room temperature imposed if ambient temperature temper bead welding imposed. IWB-3514-2 for planar flaw acceptance. IWB-3514-3 for laminar flaw acceptance with limitation not to exceed 10% of the surface area and no linear dimension in excess of 3 inches. Reduction in coverage limited to 10%. VT-3 of affected restraints, snubbers and supports to verify design tolerances are met. (b) Preservice Examinations, Figure 2, defines the examination volume. Angle beam exam parallel and perpendicular to piping axis. Scan in four directions to locate and size flaws. Acceptance criteria IWB-3514-2 for the overlay. Wall thickness t_w is the thickness of the overlay. Flaws in outer 25% of base material meet design requirements of 2.0.

Comparison of Proposed Alternative with N-504-3 (Continued)	
N-504-3	**PROPOSED ALTERNATIVE**
	(c) Inservice Examinations Examination required 1st or 2nd refueling outage following application. Examination volume the same as preservice. acceptance standards the same as preservice except IWB-3600 evaluation permitted for non PWSCC flaws as an alternative to IWB-3514-2 for the weld overlay. Future examination requirements define depending on examination results. (d) Additional Examinations Similar to Code examination expansion rules.
(h) System Hydrostatic Test if pressure boundary penetrated (leak). System Leakage Test if pressure boundary not penetrated (no leak).	4.0 Pressure Testing System Leakage Test per IWA-5000
(k) VT-3 of snubbers, supports and restraints after welding	Covered under 3.0 (a) Acceptance Examinations
(l) Reference to other applicable requirements of IWA-4000	IWA-4000 requirements will be met unless an alternative provided
(m) Use of case to be documented on an NIS-2 form	5.0 Documentation Use of case to be documented on an NIS-2A form

Comparison of Proposed Alternative with N-638-1	
N-638-1	**APPENDIX 1 OF THE PROPOSED ALTERNATIVE**
Code Case N-638-1 provides rules for automatic or machine GTAW temper bead welding without pre-heat or post weld heat treatment. The case covers similar and dissimilar welding for cavity and overlay repairs. The code case permits the use of NDE examinations in accordance with the case in lieu of those in the Construction Code. This case has a broader scope of use then Attachment 1.	Appendix 1 invoked in 1.0 (b) for use of ambient temperature temper bead welding as an alternative to the post weld heat treatment requirements of the Construction Code and Owner's requirements. The appendix provides the ambient temperature temper bead requirements applicable to dissimilar metal weld overlay repairs. NDE requirements are in lieu of the Construction Code and were covered in Section 3.0 of the alternative.
1.0 General Requirements	1.0 General Requirements
Scope of welds in the Reply	(a) Scope of welds. Same as N-638-1 for RR 36 materials
(a) Max area of finished surface of the weld limited to 100 square inches and half of the ferritic base metal thickness. (Note: the depth requirement is for the ferritic material. There is no need to limit either surface area or depth for welding on austenitic SS or nickel alloys since no post weld heat treatment is required.)	(b) Surface area limitation 300 square inches over the <u>ferritic material</u>. (Note: Code Case N-638-3 which has been approved by ASME but has not been issued. Residual stress analyses results show that stresses for 100 square inches through 500 square inches surface area overlays very similar.)
(b) (c) (d) (e) (f)	(c) (d) (e) (f) (g) same as requirements listed for N-638-1
1.0 Welding Qualifications The welding procedures and welding operators shall be qualified in accordance with Section IX and the requirements of 2.1 and 2.2	2.0 Welding Qualifications The welding procedures and welding operators shall be qualified in accordance with Section IX and the requirements of 2.1 and 2.2
2.1 Procedure Qualification Paragraphs (a) (d) (e) (f) (g) Paragraph (h) Paragraph (i) Paragraph (j) Paragraph (b) Provisions for welding in a pressurized environment Paragraph (c) Provisions to address	2.1 Procedure Qualification Paragraphs (a) (d) (e) same as in N-638-1 for equivalent paragraphs. Equivalent paragraph not in Appendix 1. Paragraph (f) same as (i) from N-638-1. (j) Paragraph (g) changed the first sentence adding "lateral expansion" in front of "value" both at the beginning and end of the sentence. Not included for overlays in Attachment 1.

Comparison of APS Proposed Alternative Verses Code Cases N-504-2 and N-638-1

Comparison of Proposed Alternative with N-638-1	
N-638-1	**APPENDIX 1 OF THE PROPOSED ALTERNATIVE**
radiation effects	Not included in Attachment 1. Thermal neutron limitation imposed in the proposed alternative 1.0(e).
1.1 Performance Qualification Welding operators shall be qualified in accordance with Section IX.	2.2 Performance Qualification Welding operators shall be qualified in accordance with Section IX.
3.0 Welding Procedure Requirements	3.0 Welding Procedure Requirements
(a) (b) (c) (d)	(a) (b) (c) same as N-638-1 except last two sentences deleted in (c) from N-638-1 since not applicable to this proposed alternative. (d) same as N-638-1.
	(e) Paragraph added to clarify temperature measurement requirements. This is identical wording to N-638-2, which has been approved by ASME.
(e)	(f) same as (e) from N-638-1
4.0 Examination	3.0 Examination and Inspection in the proposed alternative for requirements.
5.0 Documentation	5.0 Documentation in the proposed alternative.
	4.0 Pressure Testing in the proposed alternative.