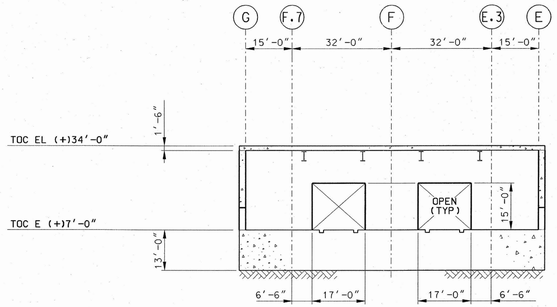

ELEVATION ALONG COLUMN "1"
(LOOKING WEST)

SECTION A
DB0-CR00-00101, 00102
SS0-CR00-00101

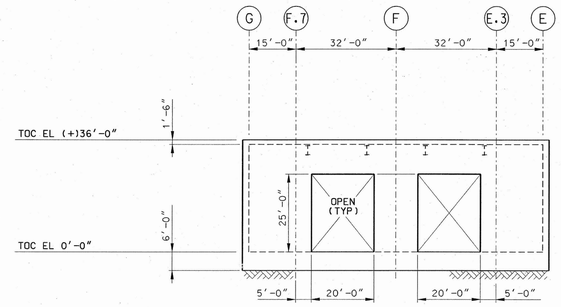

ELEVATION ALONG COLUMN "13"
(LOOKING WEST)

SECTION B
DB0-CR00-00101, 00102
SS0-CR00-00101

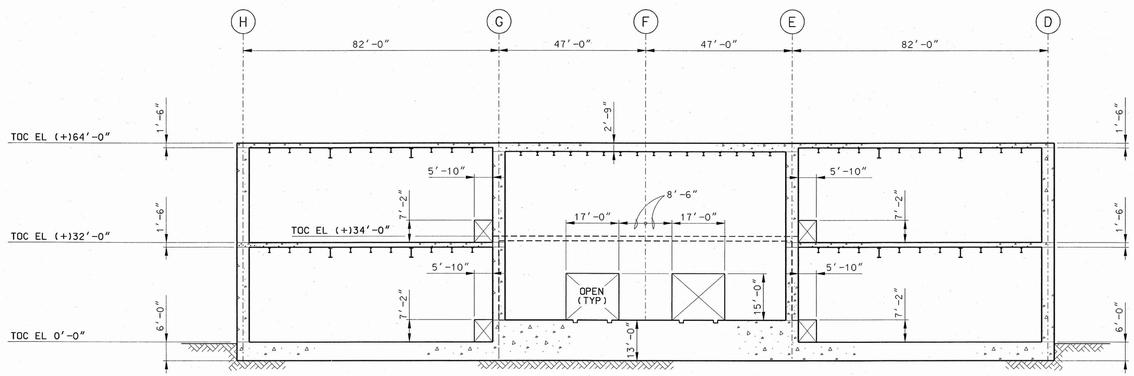

ELEVATION ALONG COLUMN "2"
(LOOKING WEST)

SECTION C
DB0-CR00-00101, 00102, 00103
SS0-CR00-00101, 00102

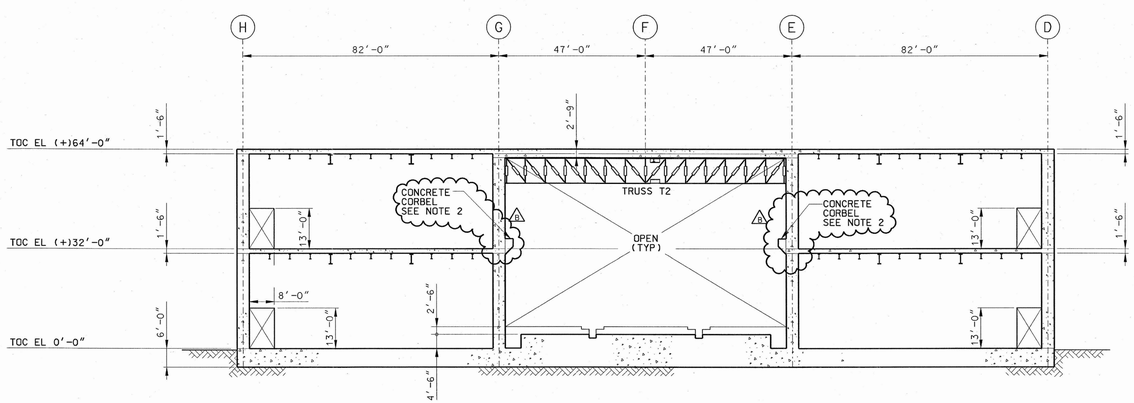

ELEVATION ALONG COLUMN "3"
(LOOKING WEST)

SECTION D
DB0-CR00-00101, 00102, 00103
SS0-CR00-00101, 00102

NOTES:

1. FOR NOTES AND REFERENCE DRAWINGS, SEE DWG 060-DB0-CR00-00101-000.
2. CONCRETE CORBELS SHOWN FOR ILLUSTRATIVE PURPOSES ONLY.

THIS DRAWING IS PRELIMINARY AND NOT INTENDED FOR CONSTRUCTION, PROCUREMENT OR FABRICATION.

GRAPHIC SCALE
0 8 16 24 32 40 48 FEET
1/16" = 1'-0"

REV	DESCRIPTION	DATE	ORG	CHK	EGS	PE	DEM	N/A	DE
B	REMOVED HOLD. HOLD NOTE. ADDED NOTE 2 AND REVISED NOTE 1. REISSUED FOR LA	1/17/08					N/A	N/A	PB
A	ISSUED FOR LA	6/29/07	NAC	MAD	TF	DN	N/A	N/A	PB

REVISION HISTORY

APPROVALS	INITIAL/DATE
ORIGINATOR N. CABATO	NAC 6/27/07
CHECKER M. DENLINGER	MAD 6/27/07
ENGINEERING GROUP SUPERVISOR T. FRANKERT	TF 6/27/07
PROJECT ENGINEER D. NEVERGOLD	DN 6/29/07
DISCIPLINE ENGINEERING MANAGER N/A	N/A
N/A	N/A
DE CONCURRENCE P. BUENVIAJE	PB 6/28/07

U.S. DEPARTMENT OF ENERGY
Office of Civilian Radioactive Waste Management
BECHTEL SAIC COMPANY, LLC
Management and Operation of the Office of Civilian Radioactive Waste Management Program

NUCLEAR FACILITIES BUILDINGS
CANISTER RECEIPT
AND CLOSURE FACILITY #1
ELEV @ COL LINES 1, 2, 3 & 13

SAFETY CLASSIFICATION: ITS
DOCUMENT IDENTIFIER: 060-DB0-CR00-00107-000
SIZE: E | SCALE: 1/16"=1'-0" | CAD FILENAME: 060db0cr0000107.dgn | REV: 00B
CAGE CODE: N/A
ANSI E- 34"x44" RECORD DESIGNATOR QA: QA

17-JAN-2008 07:47

balbag
h:\stru\la\FRAGILITY\060 (CRCF)\060db0cr0000107.dgn