RAS-E-272

DOCKETED
USNRC

August 14 2009 (3:05pm)

OFFICE OF SECRETARY
RULEMAKINGS AND
ADJUDICATIONS STAFF

**UNITED STATES OF AMERICA**
**NUCLEAR REGULATORY COMMISSION**

**BEFORE THE ATOMIC SAFETY AND LICENSING BOARD**

| | |
|---|---|
| In the Matter of | Docket Nos. 50-247-LR and 50-286-LR |
| ENTERGY NUCLEAR OPERATIONS, INC. | ASLBP No. 07-858-03-LR-BD01 |
| (Indian Point Nuclear Generating Units 2 and 3) | |

# APPLICANT'S MOTION FOR SUMMARY DISPOSITION OF NEW YORK STATE CONTENTION 8 (ELECTRICAL TRANSFORMERS)

Kathryn M. Sutton, Esq.
Paul M. Bessette, Esq.
Martin J. O'Neill, Esq.
William C. Dennis, Esq.

COUNSEL FOR
ENTERGY NUCLEAR OPERATIONS, INC

August 14, 2009

TEMPLATE= SECY-041

DS03

## TABLE OF CONTENTS


Page

I. PRELIMINARY STATEMENT ..... 1

II. STATEMENT OF FACTS ..... 3

A. Submittal and Admission of Contention NYS-8 ..... 3

B. Transformer Operation and Transformer Properties ..... 5

C. Ongoing Monitoring and Maintenance of Indian Point Transformers ..... 7

D. The AMR Scoping and Screening Requirements of 10 C.F.R. Part 54 ..... 8

E. Entergy's Scoping and Screening of Electrical SSCs in the LRA ..... 9

1. The LRA Scoping Process ..... 9

2. The LRA Screening Process ..... 12

F. The NRC Staff's Safety Evaluation Report ..... 13

III. STATEMENT OF THE ISSUE ..... 14

IV. APPLICABLE LEGAL STANDARDS ..... 15

A. Legal Standards for Summary Disposition ..... 15

B. Legal Standards for License Renewal ..... 17

V. ARGUMENT ..... 19

A. NYS's Allegation that the LRA Improperly Excludes an AMP for Transformers Presents No Genuine Issue of Material Fact ..... 20

1. Transformers Perform Their Intended Function Through a Change in State and Are More Similar to the Component Examples Listed in 10 C.F.R. § 54.21(a)(1) as Excluded from Aging Management Review ..... 21

2. The NRC Staff's Long-Standing Interpretation of 10 C.F.R. § 54.21(a)(1)(i) and Associated Regulatory Practice Confirms That Transformers Are Properly Excluded from Aging Management Review Under the License Renewal Rule ..... 24

B. NYS's Allegations that Failure to Properly Manage Aging of Transformers Could Result in Beyond-DBA Accidents and Loss of Emergency Power Present No Genuine Issue of Material Fact ..... 29

C. NYS's Allegation that Entergy Has Excluded "Switchyard Transformers" from the Scope of License Renewal Presents No Genuine Issue of Material Fact ..... 29

VI. CONCLUSION ..... 30

UNITED STATES OF AMERICA
NUCLEAR REGULATORY COMMISSION

BEFORE THE ATOMIC SAFETY AND LICENSING BOARD

| | | |
|---|---|---|
| In the Matter of | ) | Docket Nos. 50-247-LR and 50-286-LR |
| ENTERGY NUCLEAR OPERATIONS, INC. | ) | ASLBP No. 07-858-03-LR-BD01 |
| (Indian Point Nuclear Generating Units 2 and 3) | ) | August 14, 2009 |

# APPLICANT'S MOTION FOR SUMMARY DISPOSITION OF NEW YORK STATE CONTENTION 8 (ELECTRICAL TRANSFORMERS)

## I. PRELIMINARY STATEMENT

Entergy Nuclear Operations, Inc. ("Entergy" or "Applicant") hereby requests that the Atomic Safety and Licensing Board ("Board") grant summary disposition, pursuant to 10 C.F.R. § 2.1205, in favor of Entergy on New York State ("NYS") Contention 8 ("NYS-8"). As admitted, NYS-8 alleges that Entergy's license renewal application ("LRA") for Indian Point Nuclear Generating Units 2 and 3 ("IP2" and "IP3") improperly excludes an aging management program ("AMP") for each electrical transformer in IP2 and IP3 required for compliance with 10 C.F.R. §§ 50.48 and 50.63.[1]

The record in this proceeding and the expert declarations accompanying this Motion demonstrate that there is no genuine issue of material fact, and that Entergy is entitled to a

[1] *See* New York State Notice of Intention to Participate and Petition to Intervene (Nov. 30, 2007) ("NYS Petition"); *Entergy Nuclear Operations, Inc.* (Indian Point Nuclear Generating Units 2 and 3), LBP-08-13, 68 NRC 43, 89, 218 (2008). 10 C.F.R. § 50.48, "Fire protection," sets forth the NRC's fire protection requirements for operating nuclear power plants. 10 C.F.R. § 50.63, "Loss of all alternating current power," requires operating nuclear power plants to "be able to withstand for a specified duration and recover from a station blackout as defined in § 50.2" and specifies other related requirements. *Id.* § 50.63 (a)(1).

decision in its favor as a matter of law.[2] Neither NYS nor its technical consultant has provided any information or analysis to support the allegation that transformers "function without moving parts or without a change in configuration or properties" and, therefore, require an AMP under 10 C.F.R. Part 54.[3]

As shown below, NYS's allegation is conclusory and unfounded. Indeed, it is untenable in view of established legal and technical principles. In brief, for those plant-specific systems, structures, and components ("SSCs") within the scope of license renewal, 10 C.F.R. § 54.21(a)(1)(i) *excludes* from aging management review ("AMR") those structures and components that perform their intended functions through "a change in configuration or properties." In implementing this provision, the Commission stated unequivocally that "a change in configuration or properties should be interpreted to include a *change in state*."[4] It is uncontroverted, as a technical matter, that *all* transformers perform their intended functions through changes in their voltage and current properties; *i.e.*, "a change in state." Therefore, because transformers *perform their intended functions* through a change in state, they are properly excluded from the AMR requirements in Part 54, and no AMP is required.

In fact, the exclusion of transformers from AMR under Part 54 is a settled and long-standing NRC Staff position, and consistent with the regulatory intent of the License Renewal Rule and directly apposite Commission guidance. Moreover, it is manifest in formal Staff

---

[2] This Motion is supported by (1) a Statement of Material Facts as to which Entergy asserts there is no genuine dispute; (2) the declaration of Roger Rucker, Engineering Consultant to Entergy License Renewal Services; (3) the declaration of John Craig, Senior Nuclear Safety Consultant, Talisman International, LLC (and former Director, NRC License Renewal and Environmental Review Directorate); and (4) and the declaration of Dr. Steven Dobbs, Electrical Engineering Consultant, Dobbs & Associates Engineering, Inc. The Motion and supporting expert declarations cite four exhibits that also are appended hereto.

[3] NYS Petition at 103; *see also* New York State Reply in Support of Petition to Intervene at 58 (Feb. 22, 2008) ("NYS Reply").

[4] *See* Final Rule, Nuclear Power Plant License Renewal; Revisions, 60 Fed. Reg. 22,461, 22,477 (May 8, 1995) ("1995 Part 54 Revisions") (internal quotation marks omitted) (emphasis added), attached hereto as Exhibit 1. The 1995 Part 54 Revisions also are referred to herein as the Statement of Consideration ("SOC").

communications, NRC guidance, and the Staff's prior review and acceptance of LRAs for over 50 nuclear power units to date. As such, no evidentiary hearing is needed to resolve NYS-8.

## II. STATEMENT OF FACTS

### A. Submittal and Admission of Contention NYS-8

This proceeding concerns Entergy's application, submitted to the NRC on April 23, 2007, to renew the operating licenses for IP2 and IP3 for 20 years beyond their current expiration dates of September 9, 2013 and December 12, 2015, respectively. On November 30, 2007, NYS filed a petition to intervene in the associated adjudicatory hearing. Therein, NYS proffered several contentions challenging various aspects of Entergy's LRA, including NYS-8.[5]

NYS-8 alleged that the LRA violates 10 C.F.R. §§ 54.21(a) and 54.29 because it does not include an AMP for each electrical transformer whose proper function is important for plant safety.[6] NYS claimed that the management of these transformers is within the scope of license renewal because transformers allegedly perform their safety function "without moving parts or without a change in configuration or properties."[7] NYS further claimed that a failure to properly manage these transformers "may" compromise (1) the integrity of the reactor coolant pressure boundary; (2) the capability to shut down the reactor and maintain it in a safe shutdown condition; or (3) the ability to prevent or mitigate the consequences of accidents.[8] Finally, citing a September 21, 2007 draft request for additional information ("D-RAI"), NYS alleged that the Staff had identified certain transformers "for which [sic] AMP should be provided but which are not included in the LRA."[9] NYS claimed that "the DRAI indicates that switchyard

---

[5] NYS Petition at 103-05.

[6] *Id.* at 103.

[7] *Id.*

[8] *Id.* at 103-04.

[9] *Id.* at 105; *see also* NYS Reply at 59-60.

transformers... are within the scope of [AMR] and are 'within the scope of the [license renewal] rule.'"[10]

As support, NYS relied principally on the declaration of Mr. Paul Blanch.[11] Of the 31 paragraphs comprising Mr. Blanch's declaration, only four relate to NYS-8.[12] With regard to the operation of transformers, Mr. Blanch's declaration states that "[t]ransformers function without moving parts or without a change in configuration or properties as defined in that regulation."[13] Notably, his declaration contains no technical justification for this claim.

On July 31, 2008, the Board admitted NYS as a party to this proceeding.[14] Among other contentions, the Board admitted NYS-8, which, as admitted, alleges that: "Entergy has not proposed an AMP for each electrical transformer in IP2 and IP3 required for compliance with 10

---

[10] NYS Reply at 60 (quoting October 16, 2007 Memorandum Confirming September 21, 2007 D-RAI, Encl. 2. at 10, *available at* ADAMS Accession No. ML072770605).

[11] *See* Declaration of Paul Blanch (Nov. 28, 2007) ("Blanch Decl.").

[12] With respect to transformers, Mr. Blanch's declaration (¶¶ 21-24) states, *in its entirety*, as follows:

> 21. There are numerous Electrical Transformers that perform a function described in §§ 54.4(a)(l)/(2) and (3). Transformers function without moving parts or without a change in configuration or properties as defined in that regulation.
>
> 22. Failure to properly manage aging of Electrical Transformers may compromise:
>
> a. The integrity of the reactor coolant pressure boundary;
>
> b. The capability to shut down the reactor and maintain it in a safe shutdown condition; or
>
> c. The capability to prevent or mitigate the consequences of accidents which could result in potential offsite exposures comparable to those referred to in §§ 50.34(a)(1), 50.67(b)(2), or § 100.11 of this chapter, as applicable. 10 C.F.R. §§ 54.4(a)(l)(2) and (3).
>
> 23. The consequence of failures of Electrical Transformers may result in accidents beyond the Design Basis Accidents resulting in exposures to the public exceeding l0 C.F.R. § 100 limits.
>
> 24. Failure to properly manage aging of electrical transformers could result in loss of emergency power to the 480 volt safety equipment and 6.9kV busses including station blackout loads. Appendix A, Page A-35 of the UFSAR supplement describes a Structures Monitoring Program that includes a program for monitoring "transformer/switchyard support structures" yet there is no [sic] APM described for transformers within the scope of 10 C.F.R. § 54.2l(a)(1)(i).

[13] *Id.* at ¶ 21.

[14] *Indian Point*, LBP-08-13, 68 NRC at 89, 217.

C.F.R. §§ 50.48 and 50.63. This does not include transformer support structures."[15] Thus, as admitted, NYS-8 focuses on the application of the AMR requirements of Part 54 to a single type of component; *i.e.*, the electrical transformer.

## B. Transformer Operation and Transformer Properties

As Dr. Dobbs explains in his declaration, all transformers, irrespective of their size or specific application, are based on two fundamental scientific principles.[16] First, an alternating electric current flowing through a wire will produce a magnetic field.[17] Second, a changing magnetic field within a coil of wire will produce a voltage across the ends of the coil.[18] The alternating current that flows through the "primary" winding establishes a *time-varying* magnetic flux (*i.e.*, the strength of the magnetic field is continuously increasing or decreasing), some of which links or "couples" with the "secondary" winding and induces an alternating voltage across that coil.[19]

If the secondary winding is connected to a load and current is allowed to flow into that load, then power will be transferred to that load.[20] Thus, the "very essence" of a transformer is the process by which it accepts voltage and current at an input and then "transforms" that voltage

---

[15] *Id.* at 218.

[16] Declaration of Steven E. Dobbs in Support of Entergy's Motion for Summary Disposition of New York State Contention 8 at ¶¶ 7, 21 ("Dobbs Decl."). IP2 and IP3, like other nuclear plants, contain numerous types of transformers, including, for example, instrument transformers, load center transformers, small distribution transformers, large power transformers, isolation transformers, coupling capacitor, and voltage transformers. *See* Declaration of Roger B. Rucker in Support of Entergy's Motion for Summary Disposition of New York State Contention 8 at ¶ 17 ("Rucker Decl.").

[17] Dobbs Decl. at ¶ 7.

[18] *Id.*

[19] *Id.* at ¶¶ 9, 11. Dr. Dobbs describes the fundamental mathematical principles governing transformer operation in his declaration. *See id.* at ¶¶ 10-15.

[20] *Id.* at ¶ 14; *see also* Declaration of John W. Craig in Support of Entergy's Motion for Summary Disposition of New York State Contention 8 at ¶¶ 21-22 ("Craig Decl.").

and current to different values at its output(s).[21] A transformer performs its intended function by stepping down voltage from a higher to a lower value, stepping up voltage from a lower to a higher value, or providing isolation to a load.[22]

The voltages and currents associated with a transformer are integral properties of a transformer.[23] Without voltage and current, there is no transformer operation.[24] The voltages, current, and the associated magnetic field all *must* vary in time to achieve transformer operation.[25] Moreover, the voltage and currents vary whenever load conditions change.[26] These principles apply equally to all transformers—from the smallest electronic unit to the largest distribution transformer.[27]

Furthermore, these integral properties can be monitored while the transformer is performing its intended function and provide an indication as to the operational health of a transformer.[28] For example, all transformers have internal losses that result in heating of the unit.[29] A normally functioning transformer will stabilize at a temperature dependent on its environment.[30] The temperature of a transformer or its infrared signature, which changes with load, can be monitored to verify proper operation.[31] As such, the voltages, currents, and heat

---

21 Dobbs Decl. at ¶ 6.

22 Craig Decl. at ¶ 26. For example, in the IP2 and IP3 turbine buildings, when 6.9 kV 60-cycle AC voltage is applied to the primary coil of the station service transformers, a 480-volt AC at 60-cycle voltage is created on the secondary coil, so secondary or output current is higher than the primary or input current. *See id.* at ¶ 22.

23 Dobbs Decl. at ¶ 16.

24 *Id.*

25 *Id.* at ¶ 22.

26 *Id.*

27 *Id.* at ¶ 21.

28 *Id.* at ¶ 25.

29 *Id.* at ¶ 26.

30 *Id.*

31 *Id.*

signature of transformer are all properties that are peculiar to a given unit, change as the transformer performs its intended function, and are readily monitorable.[32]

## C. Ongoing Monitoring and Maintenance of Indian Point Transformers

All transformers at IP2 and IP3 are governed by the above-described scientific principles. Thus, potential degradation of the ability of a transformer to perform its intended function is monitorable by changes in the electrical performance of the transformer and/or its associated circuits.[33] In fact, certain transformers are directly and continuously monitored at IP2 and IP3 through instrumentation provided to detect degrading conditions.[34] Station operators monitor the in-service performance of instrumented transformers, including those necessary for compliance with 10 C.F.R. § 50.48 and 50.63.[35] If voltage conditions exceed defined acceptable ranges, then an alarm condition will be sounded automatically to alert operators to the condition.[36] These indicators or alarms appear on supervisory panels in the IP2 and IP3 control rooms or on individual transformer panels that are checked during frequent operator rounds.[37] Station procedures require corrective actions if transformer performance is outside of acceptable ranges.[38] Established station procedures, which are included in activities such as personnel training and quality assurance audits, and subject to periodic NRC inspection, require appropriate corrective actions when monitored transformer performance does not meet acceptable ranges. [39]

---

[32] *Id.* at ¶ 27.

[33] Rucker Decl. at ¶ 19.

[34] *Id.* at ¶¶ 19-20.

[35] *Id.* at ¶ 20.

[36] *Id.*

[37] *Id.*

[38] *Id.*

[39] *Id.*

Additionally, Entergy has implemented, as part of the current licensing bases ("CLBs") for IP2 and IP3, preventive maintenance, inspection, and surveillance programs and procedures to manage "active" systems and components, including transformers required for compliance with 10 C.F.R. § 50.48 and 50.63.[40] These programs and procedures, some of which are necessary to comply with the NRC's Maintenance Rule (10 C.F.R. § 50.65), are intended to identify and correct potential degradation (including aging) issues associated with active systems and components. Instrument checks, functional tests, and calibration functional tests, among other methods, are used at IP2 and IP3.[41] As at other NRC-licensed plants, the data and information from such tests and performance monitoring programs is analyzed and trended to provide an indication of potential aging degradation for these electrical components.[42]

## D. The AMR Scoping and Screening Requirements of 10 C.F.R. Part 54

Two of the principal steps in the development of an LRA are (1) identification of the SSCs within the scope of the License Renewal Rule (also known as "scoping") and (2) identification of the structures and components subject to AMR based on their intended functions (also known as "screening").[43] Section 54.4 defines the plant SSCs within the scope of the License Renewal Rule based on their intended functions.[44] The "scoping" phase requires the licensee to identify all plant SSCs that are safety-related or whose failure could affect safety-

---

[40] *Id.* at ¶¶ 19, 21. In accordance with 10 C.F.R. § 54.33(d), these CLB programs and procedures would continue during the period of extended operation. *Id.* at ¶ 19.

[41] *Id.* at ¶ 21.

[42] *Id.*

[43] *Id.* at ¶ 6. These two steps are discussed in greater detail in NUREG-1800, Revision 1, "Standard Review Plan for Review of License Renewal Applications for Nuclear Power Plants" at §§ 2.1 and 2.2 (Sept. 2005) ("SRP-LR").

[44] Rucker Decl. at ¶ 6.

related functions, or that are relied on to demonstrate compliance with specific NRC regulations.[45]

Section 54.21(a)(1) limits the structures and components "subject to an aging management review" to those structures and components that "perform an intended function . . . without moving parts or *without a change in configuration or properties*" (also known as "passive" structures and components).[46] Section 54.21(a)(1) excludes from AMR those structures and components that (1) perform an intended function with moving parts or a change in configuration or properties or (2) are replaced based on a qualified life or specified time period.[47] The identification of the subset of components subject to AMR is commonly referred to in license renewal applications as "screening."[48] The objective of screening is to determine if components in the scope of license renewal are subject to AMR.[49] Components subject to AMR are subsequently reviewed to determine whether applicable aging effects require some form of aging management to meet the requirements of Part 54.[50]

## E. Entergy's Scoping and Screening of Electrical SSCs in the LRA

### *1. The LRA Scoping Process*

During the license renewal scoping process, Entergy used a bounding approach for plant electrical and instrumentation and control ("I&C") systems and components.[51] Specifically, the bounding approach included in the scope of license renewal all plant electrical and I&C systems

---

45 *Id.*

46 10 C.F.R. § 54.21(a)(1)(i) (emphasis added); Rucker Decl. at ¶ 8.

47 Rucker Decl. at ¶ 8; *see also* SRP-LR at § 2.1.3.2.2. Structures and components that are not replaced based on qualified life or specified time period are referred to as "long-lived" components. Rucker Decl. at ¶ 8.

48 Rucker Decl. at ¶¶ 6, 9; *see also* SRP-LR at § 2.1.3.2.

49 Rucker Decl. at ¶ 9.

50 *Id.*

51 *Id.* at ¶ 10.

(as well as electrical and I&C components in mechanical systems).[52] This bounding method eliminates the need for unique identification of every electrical and I&C component and its specific location, and assures that components are not improperly excluded from the scope of license renewal.[53] Consequently, Entergy included in the scope of license renewal all plant electrical equipment, including *all* plant transformers.[54] Importantly, this encompasses all transformers that perform a function necessary to demonstrate compliance with the NRC regulations identified in 10 C.F.R. § 54.4(a)(3), including 10 C.F.R. §§ 50.48 and 50.63.[55] LRA Tables 2.2-1b-IP2 and 2.2-1b-IP3 list the electrical and I&C systems within the scope of license renewal for IP2 and IP3, respectively.[56]

In addition to plant electrical systems, Entergy included in the scope of license renewal certain switchyard components that restore offsite power following a station blackout ("SBO") event.[57] The offsite power sources that support SBO recovery actions are those that supply the IP2 and IP3 station auxiliary transformers and gas turbine autotransformers.[58] The offsite power recovery path thus includes these transformers, the switchyard circuit breakers supplying the

---

52 *Id.*

53 *Id.*; *see also* SRP-LR at 2.5-1 to 2.5-2. The NRC's SRP-LR states that "[t]he applicant may use the 'plant spaces' approach in scoping electrical and I&C components for license renewal," and that this approach "provides efficiencies in the AMR of electrical equipment located within the same plant space environment." Specifically, under "plant spaces" approach, an applicant may indicate that all electrical and I&C components located within a particular plant area ("plant space"), such as the containment and auxiliary building, are within the scope of license renewal. SRP-LR at 2.5-1, 2.5-4.

54 Rucker Decl. at ¶ 11.

55 *Id.*

56 *Id.*; Exh. 2, LRA at 2.2-12 to 2.2-14.

57 Rucker Decl. at ¶ 12; Exh. 2, LRA at 2.5-1. *See also* LRA Figures 2.5-2 and 2.5-3 (IPEC Offsite Power Recovery Diagrams for IP2 and IP3, respectively). Figures 2.5-2 and 2.5-3 were revised on March 24, 2008 and November 16, 2007, respectively in response to Staff requests for additional information. The revised versions of these figures are included in Exhibit 2. An SBO is defined as "the complete loss of alternating current (ac) electric power to the essential and nonessential switchgear buses in a nuclear power plant (*i.e.*, loss of offsite electric power system concurrent with turbine trip and unavailability of the onsite emergency ac power system)." 10 C.F.R. § 50.2.

58 Rucker Decl. at ¶ 12; Exh. 2, LRA at 2.5-2; LRA Figures 2.5-2 and 2.5-3.

transformers, the circuit breaker-to-transformer and transformer-to-onsite electrical distribution interconnections, and associated control circuits and structures.[59]

Entergy's scoping for SBO recovery is consistent with NRC regulations and guidance, in which the Staff has indicated that the plant system portion of the offsite power system should be included within the scope of license renewal.[60] Entergy has clarified and confirmed this point in response to RAIs from the NRC Staff, including in its response to the final version of the D-RAI 2.5-1 cited by NYS in support of NYS-8.[61] Accordingly, by including in scope for license renewal the SBO recovery paths from the offsite power system or grid connection to the plant systems, Entergy included in scope the "switchyard transformers" alluded to in NYS-8.

In summary, as described in the LRA, Entergy used a comprehensive bounding approach to scoping for electrical and I&C equipment. On-site electrical systems and electrical equipment in mechanical systems—including all transformers—are, by default, included in scope for license renewal. Additionally, switchyard components (including transformers) that restore offsite power following an SBO are included within the scope of license renewal.

---

59 Rucker Decl. at ¶ 12; Exh. 2, LRA at 2.5-2.

60 Rucker Decl. at ¶ 13. *See* Letter from David B. Matthews, Director, Division of Regulatory Improvement Programs, NRC, to Alan Nelson, Nuclear Energy Institute, Subject: Staff Guidance on Scoping of Equipment Relied on to Meet the Requirements of the Station Blackout (SBO) Rule (10 CFR 50.63) for License Renewal (10 CFR 54.4(a)(3)) (Apr. 1, 2002), *available at* ADAMS Accession No. ML020920464. The Staff has determined that the plant system portion of the offsite power system that is used to connect the plant to the offsite power source should be included within the scope of the rule. According to the Staff, "[t]his path typically includes the switchyard circuit breakers that connect to the offsite system power transformers (startup transformers), the transformers themselves, the intervening overhead or underground circuits between circuit breaker and transformer and transformer and onsite electrical distribution system, and the associated control circuits and structures." *Id.* at 2. *See also* SRP-LR at 2.1-9, 2.5-2 to 2.5-3.

61 *See* NL-07-138, Letter From Fred Dacimo, Entergy, to NRC Document Control Desk, Subject: Reply to Request for Additional Information Regarding License Renewal Application, Att. 1 at 20-24 (Nov. 16, 2007) (responding to final RAI 2.5-1) ("November 16, 2007 RAI Response"), *available at* ADAMS Accession No. ML073320225; NL-09-079, Letter From Fred Dacimo, Entergy, to NRC Document Control Desk, Subject: Reply to Request for Additional Information Regarding Offsite Power, Refueling Cavity, and Unit 2 Auxiliary Feedwater Pump Room Fire Event Att. 1, at 1-5, *available at* ADAMS Accession No. ML091750166 (June 12, 2009).

2. *The LRA Screening Process*

In accordance with Section 54.21(a), Entergy conducted a screening process to determine which in-scope electrical structures and components are subject to AMR.[62] As part of screening, Entergy grouped the total population of in-scope electrical components into component types, and these component types were compared to NEI 95-10, Appendix B ("Typical Structure, Component and Commodity Groupings and Active/Passive Determinations for the Integrated Plant Assessment") to identify passive component types.[63] The passive component types were identified as commodity groups, which include similar electrical and I&C components with common characteristics.[64] Entergy then identified component-level intended functions of the commodity groups.[65] As Entergy examined these intended functions, certain commodity groups were eliminated from further review based on the criteria in 10 C.F.R. § 54.21(a)(1)(i) and the implementing guidance in NEI 95-10, Appendix B.[66]

Entergy identified two passive electrical and I&C commodity groups as meeting the Section 54.21(a)(1)(i) criterion; *i.e.*, components that perform an intended function *without* moving parts or without a change in configuration.[67] Those commodity groups are (1) high voltage insulators and (2) cables and connections, bus, electrical portions of electrical and I&C

---

62 Rucker Decl. at ¶ 14.

63 *Id.* at ¶ 15; NEI 95-10, Industry Guideline for Implementing the Requirements of 10 CFR Part 54 – The License Renewal Rule, Revision 6 (June 2005), *available at* ADAMS Accession No. ML051860406. The portion of NEI 95-10, Appendix B relevant to electrical components and commodity groupings is attached as Exhibit 3. NEI 95-10 provides NRC-approved guidance for screening to identify the passive and long-lived structures and components that support an intended function. *See* Regulatory Guide 1.188, "Standard Format and Content for Applications to Renew Nuclear Power Plant Operating Nuclear Power Plant Operating Licenses," Revision 1, at 7 (Sept. 2005),*available at* ADAMS Accession No. ML051920430, which endorses Revision 6 of NEI 95-10 (stating that NEI 95-10 "provides methods that the NRC staff considers acceptable for complying with the requirements of 10 CFR Part 54 for preparing a license renewal application.")

64 Rucker Decl. at ¶ 15; Exh. 2, LRA at 2.5-2.

65 Rucker Decl. at ¶ 15; Exh. 2, LRA at 2.5-2.

66 Rucker Decl. at ¶ 15

67 *Id.* at ¶ 16.

penetration assemblies, fuse holders outside of cabinets of active electrical systems and components.[68] For ease of discussion and comparison to NUREG-1801, Vol. 1, Table 6,[69] these two commodity groups were further divided into the component types and commodity groups listed in page 2.5-2 of the LRA.[70] LRA Table 2.5-1 lists the specific component types or commodity groups that are subject to AMR along with their intended functions.[71]

Thus, consistent with NRC-approved guidance and the underlying regulations, Entergy determined that all other electrical and I&C commodity groups are *active* and *are not subject to AMR*, in accordance with 10 C.F.R. § 54.21.[72] Those other active electrical and I&C commodity groups include transformers.[73] Specifically, as reflected in Appendix B to NEI 95-10, transformers (*e.g.*, instrument transformers, load center transformers, small distribution transformers, large power transformers, isolation transformers, coupling capacitor, voltage transformers) are *not* part of a commodity group subject to AMR in accordance with 10 C.F.R. § 54.21(a)(1)(i).[74] Table 2.1-5 of the SRP-LR also indicates that transformers are not passive structures and components subject to AMR under Section 54.21(a)(1)(i).[75]

## F. The NRC Staff's Safety Evaluation Report

The NRC Staff published its Final Safety Evaluation Report for the LRA on August 12, 2009.[76] Therein, the Staff concluded that Entergy had adequately identified the electrical and

---

68 *Id.*; LRA, Exh. 2 , LRA at 2.5-2.

69 *See* NUREG-1801, Generic Aging Lessons Learned (GALL) Report, Rev. 1 (Sept. 2005) (*i.e.*, GALL Report).

70 Rucker Decl. at ¶ 16; Exh. 2, LRA at 2.5-2.

71 Rucker Decl. at ¶ 16; Exh. 2, LRA at 2.5-4.

72 Rucker Decl. at ¶ 17.

73 *Id.*

74 *Id.*; Exh. 3, NEI 95-10, App. B at B-14.

75 Rucker Decl. at ¶ 17; SRP-LR at 2.1-23 (Table 2.1-5, Item 104).

76 Safety Evaluation Report Related to the License Renewal of Indian Point Nuclear Generating Unit Nos. 2 and 3, Docket Nos. 50-247 and 50-286, Entergy Nuclear Operations, Inc. (Aug. 12, 2009) ("Final SER").

I&C component commodity groups within the scope of license renewal, as required by 10 C.F.R. § 54.4(a), and those subject to AMR, as required by 10 CFR 54.21(a)(1).[77] The Staff did not conclude that any IP2 or IP3 transformers are subject to AMR, or that an AMP is required for transformers, under 10 C.F.R. Part 54. As discussed below, this determination is fully consistent with 10 C.F.R. § 54.21 and the Staff's long-standing position that transformers constitute active components that are not subject to AMR.

## III. STATEMENT OF THE ISSUE

As admitted by the Board, NYS-8 raises a discrete and narrow issue. Specifically, the Board admitted NYS-8

> *[T]o the extent that it questions the need for an AMP for safety-related electrical transformers that are required for compliance with 10 C.F.R. §§ 50.48 and 50.63.* We note that 10 C.F.R. § 54.21(a)(1)(i) lists components that require AMPs and also excludes other components that do not require AMPs. In addressing this contention, the Board will require, *inter alia*, representations from the parties to help us determine *whether transformers are more similar to the included, or to the excluded, component examples.*[78]

In so ruling, the Board cited the need for a "legally binding justification to exclude transformers from AMR beyond an apparent similarity to other components that have been excluded by 10 C.F.R. § 54.21(a)(1)(i)," and an "explanation on how a transformer changes its configuration or properties in performing its functions."[79] This Motion and the supporting expert declarations appended hereto provide the explanation sought by the Board, including the "legally binding justification to exclude transformers from AMR" under the license renewal rule.

---

[77] *See id.* § 2.5.1.3 at 2-225; Rucker Decl. at ¶ 18. Section 2.5 of the Final SER also contains a detailed discussion of the scoping and screening results for IP2 and IP3 electrical and I&C systems. *See* Final SER at 2-220 to 2-225.

[78] *Indian Point,* LBP-08-13, 68 NRC at 89 (emphasis added).

[79] *Id.* at 89. In its contention admissibility ruling, the Board explicitly noted that "transformer support structures" are *excluded* from the scope of admitted NYS-8. *See id.* at 89, 218.

## IV. APPLICABLE LEGAL STANDARDS

### A. Legal Standards for Summary Disposition

Motions for summary disposition are available in 10 C.F.R. Part 2, Subpart L proceedings.[80] Such motions "may be submitted to the presiding officer by any party no later than forty-five (45) days before the commencement of hearing."[81] Section 2.1205 governs the submission of motions for summary disposition,[82] and directs the Board to apply the standards for summary disposition in Subpart G of Part 2.[83] Specifically, Section 2.710(d)(2) states that "[t]he presiding officer shall render the decision sought if the filings in the proceeding..., together with the statements of the parties and the affidavits, if any, show that there is no genuine issue as to any material fact and that the moving party is entitled to a decision as a matter of law."

Section 2.710(d)(1) explicitly authorizes the Board to consider a summary disposition motion if "its resolution will serve to expedite the proceeding if the motion is granted." Indeed, the NRC's hearing rules "long have allowed summary disposition in cases where there is no genuine issue as to any material fact and where the moving party is entitled to a decision as a matter of law."[84] Summary disposition is not simply a "procedural shortcut"; rather, it is designed "to secure the just, speedy and inexpensive determination of every action," and should

---

[80] 10 C.F.R. § 2.1205.

[81] *Id.* § 2.1205(a). The Board has not established a specific deadline for filing dispositive motions. As the commencement of the hearing has not yet been established, this motion is timely.

[82] 10 C.F.R. § 2.1205.

[83] *Id.* § 2.1205(c).

[84] *Carolina Power & Light Co.* (Shearon Harris Nuclear Power Plant), CLI-01-11, 53 NRC 370, 384 (2001) (internal quotation marks omitted); *Advanced Med. Sys., Inc.* (One Factor Row, Geneva, Ohio 44041), CLI-93-22, 38 NRC 98, 102-03, *reconsideration denied*, CLI-93-24, 38 NRC 187 (1993) (affirming Licensing Board ruling granting NRC Staff's motion for summary disposition in an enforcement proceeding to impose a civil penalty on the licensee and reversing the Board's disposition of one violation).

be granted when appropriate.[85] In this regard, "[o]nly disputes over facts *that might affect the outcome of the suit under the governing law* will properly preclude the entry of summary judgment. Factual disputes that are irrelevant or unnecessary will not be counted."[86]

Initially, the burden of proof is on the movant, and "the evidence submitted must be construed in favor of the party in opposition thereto, who receives the benefit of any favorable inferences that can be drawn."[87] However, "if the movant makes a proper showing for summary disposition, and if the party opposing the motion does not show that a genuine issue of material fact exists, the Board may summarily dispose of all arguments on the basis of pleadings."[88] "To preclude summary disposition, when the proponent has met its burden, the party opposing the motion may not rest upon 'mere allegations or denials', but must set forth *specific facts* showing that there is a genuine issue."[89] Thus, "[b]are assertions or general denials are not sufficient."[90]

---

85 *Celotex Corp. v. Catrett*, 477 U.S. 317, 327 (1986) (citations omitted) (holding that the moving party was "entitled to a judgment as a matter of law" because the nonmoving party had failed to make a sufficient showing on an essential element of its case with respect to which it has the burden of proof); *see also Crow Butte Res.*, Inc. (License Renewal for In Situ Leach Facility, Crawford, Nebraska), CLI-09-09, 69 NRC __, slip. op. at 37-38 (May 18, 2009) (recently directing the Board, *sua sponte*, to grant the applicant's pending motion for summary disposition of an admitted contention because "in our view summary disposition . . . is appropriate"); *Private Fuel Storage, L.L.C.* (Independent Spent Fuel Storage Installation), LBP-01-39, 54 NRC 497, 509 (2001) (stating that summary disposition "is a useful tool for resolving...in short order those contentions that . . . are shown by undisputed facts to have nothing to commend them").

86 *Anderson v. Liberty Lobby, Inc.*, 477 U.S. 242, 248 (1986) (emphasis added).

87 *See Duke Cogema Stone & Webster* (Savannah River Mixed Oxide Fuel Fabrication Facility), LBP-05-04, 61 NRC 71, 79 (2005) ("DCS") (internal quotation marks and citation omitted) (granting the applicant's motion for summary disposition of a contention challenging its probabilistic seismic hazard analysis).

88 *Advanced Med. Sys.*, CLI-93-22, 38 NRC at 102; *see also N. States Power Co.* (Prairie Island Nuclear Generating Plant, Units 1 and 2), CLI-73-12, 6 AEC 241, 242 (1973), *aff'd sub. nom. BPI v. AEC*, 502 F. 2d 424 (D.C. Cir. 1974) ("It remains for [the intervenor] to establish, to the satisfaction of the Board which has been convened to conduct the hearing, that a genuine issue actually exists. If the Board is not so satisfied, it may summarily dispose of the contention on the basis of the pleadings.").

89 *Advanced Med. Sys.*, CLI-93-22, 38 NRC at 102 (emphasis added).

90 *Id.* at 102. Although the opposing party does not need to show that it would prevail on the issues, it must at least demonstrate that there is a genuine factual issue to be tried. *Id.* If it does controvert any material fact properly set out in the statement of material facts that accompanies a summary disposition motion, then that fact will be deemed admitted. *Id.* at 102-03.

Rather, the opposing party must "present *contrary evidence that is so significantly probative* that it creates a material factual issue."[91] "[I]n the face of persuasive affidavits in support of a motion for summary disposition, an opponent of the motion runs a high risk of defeat if he fails to produce *persuasive* rebuttal affidavits."[92] Importantly, "[c]onflicting expert opinions . . . do not necessarily preclude summary disposition."[93] "[T]he nonmoving party and its expert, in opposing summary disposition, must *clearly and thoroughly explain the basis* for the expert's opinion."[94] They cannot defeat summary disposition by presenting "subjective belief or unsupported speculation."[95] The Board need not consider documents merely quoted or cited in support by the opposing party without a competent affidavit.[96]

## B. Legal Standards for License Renewal

NYS-8 challenges the sufficiency of Entergy's LRA, as judged under the applicable license renewal requirements contained in 10 C.F.R. Part 54. Those requirements are based on two well-established principles.[97] The first principle is that, with the exception of age-related

---

91 *Id.* at 102 n.13 (citing *Pub. Serv. Co. of N. H.* (Seabrook Station, Units 1 and 2), CLI-92-8, 35 NRC 145, 154 (1992)) (emphasis added); *see id.* at 103 ("When the movant has satisfied its initial burden and has supported its motion by affidavit, the opposing party must either proffer rebutting evidence or submit an affidavit explaining why it is impractical to do so.").

92 *Carolina Power & Light Co.* (Shearon Harris Nuclear Plant, Units 1 and 2), LBP-84-7, 19 NRC 432, 435 (1984) (emphasis added).

93 *DCS*, LBP-05-04, 61 NRC at 81.

94 *Id.* at 81 (emphasis added). In opposing summary disposition, "expert opinion is admissible only if the affiant is competent to give an expert opinion and only if the factual basis for that opinion is adequately stated and explained in the affidavit." *Id.*

95 *Id.* at 80 (quoting *Daubert v. Merrell Dow Pharmaceuticals, Inc.*, 509 U.S. 579, 589-90 (1993)); *see also United States v. Various Slot Machines on Guam*, 658 F.2d 697, 700 (9th Cir. 1981) (holding that "in the context of a motion for summary judgment, an expert must back up his opinion with specific facts" in an affidavit).

96 *Shearon Harris*, LBP-84-7, 19 NRC at 435-36 (stating that "quotations from or citations to [the] published work of researchers [or experts] who have apparently reached conclusions at variance with the movant's affiants" are insufficient); *see also First Nat'l Life Ins. Co. v. California Pac. Life Ins. Co.*, 876 F.2d 877, 881, *reh'g denied en banc*, 887 F.2d 1093 (11th Cir. 1989) (holding that unsworn documents need not be considered).

97 *See* Exh. 1, 1995 Part 54 Revisions, 60 Fed. Reg. at 22,463-64.

degradation unique to life extension for certain *passive* and long-lived structures and components, the existing NRC regulatory process is adequate to ensure that currently-operating plants will continue to maintain adequate levels of safety during the period of extended operation.[98] The second principle is that each plant's CLB is required to be maintained during the renewal term in the same manner and to the same extent as during the original licensing term.[99] Thus, the overriding purpose of the license renewal requirements is to identify any *additional* actions an applicant/licensee will need to take to maintain the functionality of the structures and components for the period of extended operation.[100] Accordingly, the Commission has limited its license renewal safety review to the matters specified in 10 C.F.R. §§ 54.21 and 54.29(a)(2), which focus, in relevant part, on the management of aging of passive and long-lived structures and components.[101]

In revising Part 54 in 1995, the Commission underscored its intent to "fully integrate the maintenance rule and the license renewal rule."[102] The Maintenance Rule, 10 C.F.R. § 50.65, was issued in July 1991 and became effective in July of 1996.[103] The main purpose of the Maintenance Rule is to require monitoring of the overall continuing effectiveness of licensee maintenance programs to ensure that (1) safety-related and certain nonsafety-related SSCs are capable of performing their intended functions; (2) for nonsafety-related equipment, failures will

---

98 *Id.* at 22,464.

99 *Id.*

100 *See Fla. Power & Light Co.* (Turkey Point Nuclear Power Plant, Units 3 and 4), CLI-01-17, 54 NRC 3, 7 (2001) (stating that the "potential detrimental effects of aging that are *not* routinely addressed by ongoing regulatory oversight programs" are the focus of the NRC's safety review in license renewal proceedings).

101 *See Turkey Point*, CLI-01-17, 54 NRC at 8; *Duke Energy Corp.* (McGuire Nuclear Station, Units 1 and 2), CLI-02-26, 56 NRC 358, 363 (2002).

102 Craig Decl. at ¶ 18; Exh. 1, 1995 Part 54 Revisions, 60 Fed. Reg. at 22,471.

103 *See* Final Rule, Monitoring the Effectiveness of Maintenance at Nuclear Power Plants, 56 Fed. Reg. 31,306 (July 10, 1991), as amended, 58 Fed. Reg. 33,996 (June 23, 1993).

not occur that prevent the fulfillment of safety-related functions; and (3) failures resulting in scrams and unnecessary actuations of safety-related systems are minimized.[104]

Noting that "the intent of the license renewal rule and the maintenance rule is similar (ensuring that the detrimental effects of aging on the functionality of important [SSCs] are effectively managed)," the Commission "determined that the license renewal rule should credit existing maintenance activities and maintenance rule requirements for most structures and components."[105] The Commission also found that there was "sufficient basis for concluding that current licensee programs and activities, along with the regulatory process, will be adequate to manage the effects of aging on the *active* functions of all [SSCs] within the scope of license renewal during the period of extended operation so that the CLB will be maintained."[106] Accordingly, "structures and components that perform active functions can be generically *excluded* from an [AMR] on the basis of performance or condition monitoring programs."[107] Conversely, "structures and components within the scope of the license renewal rule that perform passive intended functions" are subject to AMR under Part 54.[108]

## V. ARGUMENT

As shown below, NYS-8 raises no genuine issue as to any material fact and should be summarily dismissed. The contention is based on a fundamental misunderstanding of Part 54 requirements, and the technically untenable premise that "[t]ransformers function without

---

[104] Craig Decl. at ¶ 18; 10 C.F.R. § 50.65(b)(1)-(2). NRC conducts inspections on a routine basis to verify licensee compliance with the Maintenance Rule. If performance problems arise, corrective action requirements of 10 C.F.R. Part 50, Appendix B, and the Maintenance Rule require effective corrective actions to preclude recurrence of the failure. *See* Exh. 1, 1995 Part 54 Revisions, 60 Fed. Reg. at 22,470.

[105] Craig Decl. at ¶ 19; Exh. 1, 1995 Part 54 Revisions, 60 Fed. Reg. at 22,471.

[106] Craig Decl. at ¶ 19.; Exh. 1, 1995 Part 54 Revisions, 60 Fed. Reg. at 22,471 (emphasis added).

[107] Craig Decl. at ¶ 19; Exh. 1, 1995 Part 54 Revisions, 60 Fed, Reg. at 22,477 (emphasis added).

[108] Craig Decl. at ¶ 19; Exh. 1, 1995 Part 54 Revisions, 60 Fed. Reg. at 22,477.

moving parts or *without a change in configuration*."[109] Contrary to NYS's claim, transformers do not "meet the functional requirements of systems for which aging management programs may be required" under the License Renewal Rule.[110] NYS has provided "nothing to commend" NYS-8 for further litigation.[111] The contention should be dismissed.

The attached expert declarations support this conclusion. In brief, Dr. Dobbs demonstrates that transformers *perform their intended function* through a readily-monitorable "change in state." This scientific fact is incontrovertible. Mr. Craig, former Director of the NRC's License Renewal and Environmental Project Directorate, explains that the conclusion that transformers are active components and not subject to AMR is a long-standing NRC Staff position—and fully consistent with the Commission's clear regulatory intent that a "change in state" be considered a "change in configuration or properties.[112] Therefore, no AMP is required.

### A. NYS's Allegation that the LRA Improperly Excludes an AMP for Transformers Presents No Genuine Issue of Material Fact

NYS claims that "transformers function without moving parts or without a change in configuration or properties" and, therefore, require an AMP under Part 54.[113] This conclusory assertion finds no support in NYS's pleadings or Mr. Blanch's associated declaration. Neither the contention nor the declaration contains any discussion of the intended function of an electrical transformer, or how a transformer performs its intended function.[114] In fact, NYS-8 ignores a key principle established by the Commission itself: "a change in configuration or

---

[109] NYS Petition at 103 (emphasis added).

[110] NYS Reply at 58.

[111] *Private Fuel Storage*, LBP-01-39, 54 NRC at 509.

[112] Exh. 1, 1995 Part 54 Revisions, 60 Fed. Reg. at 22,477 (internal quotation marks omitted).

[113] NYS Petition at 103; Blanch Decl. at ¶ 21.

[114] Craig Decl. at ¶ 20; Exh. 1, 1995 Part 54 Revisions, 60 Fed. Reg. at 22,477.

properties" includes "a change in state."[115] Nor has NYS offered a scintilla of evidence to support its erroneous belief that transformers perform their intended function without undergoing a change in configuration or properties. Summary disposition of NYS-8 plainly is warranted.

*1. Transformers Perform Their Intended Function Through a Change in State and Are More Similar to the Component Examples Listed in 10 C.F.R. § 54.21(a)(1) as Excluded from Aging Management Review*

Applying the criteria of 10 C.F.R. § 54.21(a)(1) and the elucidative principles set forth by the Commission in the 1995 Part 54 Revisions to the science of transformer operation, Dr. Dobbs concludes that "all transformers are properly excluded from AMR under § 54.21(a)(1)(i)."[116] As he explains, all transformers, regardless of type, size, or application, are *active* components because they perform their intended functions through a change in state.[117] The voltages, currents, and heat signature of a transformer are all "integral properties" of a transformer that are peculiar to a given unit, *change as the transformer performs its intended function*, and are readily monitorable.[118] Simply put, "a transformer cannot perform its intended function without changes in voltage and current properties."[119]

As Dr. Dobbs further explains, the Commission has defined "active functions" as those that can be "directly measured or observed," and "passive functions" as those that must be verified indirectly.[120] The integral properties of a transformer (voltage and current) can be

---

[115] Craig Decl. at ¶ 20; Exh. 1, 1995 Part 54 Revisions, 60 Fed. Reg. at 22,477.

[116] Dobbs Decl. at ¶ 52.

[117] *Id.* at ¶¶ 17, 21, 22, 27, 31, 35, 49, 52.

[118] *Id.* at ¶¶ 16, 27, 31.

[119] *Id.* at ¶ 22; *see also* Craig Decl. at ¶ 23.

[120] *Id.* at ¶¶ 40, 45; Exh. 1, 1995 Part 54 Revisions, 60 Fed. Reg. at 22,471.

directly measured.[121] Therefore, a transformer—regardless of its size or specific application—performs an active function and is properly excluded from AMR.[122]

Consistent with the Board's request, Dr. Dobbs further explains that transformers are more similar to the components listed in 10 C.F.R. § 54.21(a)(1)(i) as *excluded* from AMR.[123] Those excluded items include transistors, batteries, breakers, relays, switches, power inverters, battery chargers, and power supplies.[124] The ability of these items to perform their intended functions is directly indicated by one or more measurable properties, and their serviceability "is determined by making direct measurements while the items perform their intended function."[125]

Of the items listed in 10 C.F.R. § 54.21(a)(1)(i), Dr. Dobbs concludes that "the closest match to a transformer is a transistor," which is excluded from AMR.[126] Like a transformer, a transistor has no moving parts.[127] This fact alone, however, does not render it a "passive" component.[128] A transistor performs its intended function by receiving voltage and current at an input and providing a different voltage and current at an output.[129] Therefore, as in the case of a transformer, the input/output and currents are integral properties of a transistor and change as the transistor performs its intended function.[130]

---

121 Dobbs Decl. at ¶¶ 24-27, 35, 45, 50.

122 *Id.* at ¶ 47.

123 *Id.* at ¶¶ 31-32, 49.

124 *Id.* at ¶ 33; 10 C.F.R. § 54.21(a)(1)(i).

125 Dobbs Decl. at ¶¶ 33, 51; *see also* Craig Decl. at ¶ 16.

126 Dobbs Decl. at ¶¶ 34-35, 50.

127 *Id.* at ¶ 35.

128 *Id.*

129 *Id.*

130 *Id.* at ¶¶ 34-35

In contrast, those items listed as subject to AMR perform their intended functions in a way that cannot be directly verified by monitoring of a measurable property.[131] These items include, among others, the reactor vessel, pressure boundaries, piping, component supports, penetrations, electrical cables, and electrical cabinets.[132] Indirect measurements, tests, and observations must be used to predict the serviceability of the item based on an analysis of this secondary information.[133] The ability of a pipe to perform its intended function (*e.g.*, conveying water), for instance, is determined by measuring the thickness of its wall and observing it for signs of corrosion.[134]

In summary, the intended function of any transformer is to induce voltage in a separate electrical circuit. This induced voltage only exists when the transformer is performing its intended function.[135] Thus, a transformer can perform its intended function only through changes in state; *i.e.*, changes in voltage and current properties [136] These changes, moreover, may be directly measured during transformer function.[137] For these reasons, transformers are properly excluded from AMR under 10 C.F.R. § 54.21(a)(1)(i).[138] Neither NYS nor Mr. Blanch provide any information to support a contrary conclusion, including the technically untenable

---

131 *Id.* at ¶ 32; *see also* Craig Decl. at ¶ 15.

132 Dobbs Decl. at ¶ 32; 10 C.F.R. § 54.21(a)(1)(i).

133 Dobbs Decl. at ¶ 32; Craig Decl. at ¶ 15. As Mr. Craig explains, the intended function performed by those structures and components listed in 10 C.F.R. § 54.21(a)(1)(i) as subject to AMR is static; *i.e.*, the intended function is to maintain physical configuration and properties. Craig Decl. at ¶ 10. Aging degradation is not readily monitored for these components on an ongoing basis. *Id.* Additionally, these passive structures and components perform their intended functions without the application of an external force or input, and without a change of configuration, properties, or state. *Id.*

134 Dobbs Decl. at ¶ 32.

135 Dobbs Decl. at ¶ 16 ("Without voltage and current, there is no transformer operation.").

136 *Id.* at ¶¶ 22, 31.

137 *Id.* at ¶ 51.

138 *Id* at ¶ 52.

statement that transformers function "without a change in configuration or properties," which the Commission has made clear includes a "change in state."[139]

2. *The NRC Staff's Long-Standing Interpretation of 10 C.F.R. § 54.21(a)(1)(i) and Associated Regulatory Practice Confirms That Transformers Are Properly Excluded from Aging Management Review Under the License Renewal Rule*

NYS's claim that Entergy must provide an AMP for transformers is completely at odds with the long-settled NRC Staff position that transformers are not subject to AMR under Part 54 because they are *active* components.[140] When NEI first developed NEI 95-10 in the mid-1990s, it submitted that document to the NRC for review and endorsement.[141] In a related letter signed by the Director of the License Renewal Project Directorate, the NRC Staff discussed its views regarding the AMR requirements for certain electrical components. Of particular relevance here, the Staff explicitly recommended "revising Appendix B of NEI 95-10 to indicate that *transformers . . . do not require an aging management review*."[142] The Staff explained that transformers, in particular, are not subject to AMR because:

> Transformers perform their intended function through a *change in state* by stepping down voltage from a higher to a lower value, stepping up voltage to a higher value, or providing isolation to a load. *Transformers perform their intended function through a change in state similar to switchgear, power supplies, battery chargers, and power inverters, which have been excluded in §54.21(a)(1)(i) from an aging management review. Any degradation of the transformer's ability to perform its intended*

---

139 NYS Petition at 103; Blanch Decl. at ¶ 21; *see* Exh. 1, 1995 Part 54 Revisions, 60 Fed. Reg. at 22,477.

140 It is noteworthy that, after reviewing the applicant's and NRC Staff's pleadings in the *Prairie Island* license renewal proceeding, the petitioner withdrew a similar proposed contention alleging the need for an AMP for each electrical transformer that has a safety-related function. Specifically, at oral argument, the petitioner stated that "we now recognize that it is an established NRC position" that transformers are active components and withdrew its contention. *See Northern States Power Co.* (Prairie Island Nuclear Generating Plant, Units 1 and 2), LBP-08-26, 68 NRC __, slip op. at 56 (Dec. 5, 2008) (citation omitted).

141 Craig Decl. at ¶ 25.

142 *Id.*; Letter from Christopher Grimes, Director, License Renewal Project Directorate, NRC, to Douglas J. Walters, NEI, Determination of Aging Management Review for Electrical Components at 4 (Sept. 19, 1997) ("NRC 1997 Letter") (emphasis added), attached hereto as Exhibit 4. The NRC 1997 Letter also is included as Reference 2 in Appendix C to NEI 95-10, Revision 6.

> *function is readily monitorable by a change in the electrical performance of the transformer and the associated circuits.* Trending electrical parameters measured during transformer surveillance and maintenance such as Doble test results, and advanced monitoring methods such as infrared thermography, and electrical circuit characterization and diagnosis provide a direct indication of the performance of the transformer. *Therefore, transformers are not subject to an aging management review.*[143]

NEI revised Appendix B to NEI 95-10 to incorporate the explicit recommendation of the Staff that transformers be excluded from AMR, because they do not qualify as passive and long-lived structures or components.[144] In 2001, the NRC Staff endorsed Revision 3 of NEI 95-10 in Regulatory Guide 1.188.[145] Thus, since 1997, it has been the NRC Staff's formal, documented position that transformers are not subject to AMR under Part 54.

Importantly, when the Staff described its position regarding transformers in September 1997, it explicitly considered Commission guidance in the 1995 Part 54 Revisions discussion of "active" and "passive" components and structures.[146] The Staff expressly prefaced its discussion by stating "[w]hile § 54.21(a)(1)(i) excludes many electrical and I&C components from an [AMR] for renewal, it also states that the exclusion is 'not limited to' only these components."[147] With this indisputable premise as a starting point, the Staff concluded that certain other electrical

---

143 Craig Decl. at ¶ 26; Exh. 4, NRC 1997 Letter at 2 (emphasis added).

144 Craig Decl. at ¶ 27.

145 *Id.*; Regulatory Guide 1.188, "Standard Format and Content for Applications to Renew Nuclear Power Plant Operating Nuclear Power Plant Operating Licenses" (July 2001). As noted above, the latest revision of NEI 95-10 is Revision 6, issued in June 2005. The latest revision of Regulatory Guide 1.188 is Revision 1, issued in September 2005. Although these and other guidance documents (including the SRP-LR) do not have the binding effect of regulations, they are entitled to "special weight," especially because they incorporate a formally-documented position reached by the Staff after careful consideration of the underlying rule and its regulatory history. *See Private Fuel Storage, L.L.C.* (Independent Spent Fuel Storage Installation), CLI-01-22, 54 NRC 255, 264 (2001) ("Where the NRC develops a guidance document to assist in compliance with applicable regulations, it is entitled to special weight.").

146 Craig Decl. at ¶ 26. Indeed, its September 19, 1997, response to NEI, the Staff stated: "This issue relates to the guidance provided in the [SOC] in which the Commission concluded that an aging management review is required for passive, long-lived structures and components within the scope of the license renewal rule." Exh. 4, NRC 1997 Letter at 1.

147 Exh. 4, 1997 NRC Letter at 1.

structures and components not specifically listed in Section 54.21(a)(1) also are excluded from AMR:

> The Staff has considered the aging management review requirements for transformers . . . with respect to the definitions, background, and specific electrical examples in the license renewal rule (circuit breakers, relays, motors, circuit boards, etc.). *Based on the considerable discussion provided in the rule and SOC, the staff compared the electrical components identified above with the examples explicitly provided in the rule in terms of how the performance of their intended functions would be achieved and whether aging degradation of these components would be readily monitored using currently available techniques, in a similar way by which the examples in the rule (circuit breakers, relays, switches, etc.) would be monitored.*[148]

Mr. Craig concludes that the Staff's position is fully consistent with the approach discussed by the Commission in the SOC accompanying the 1995 revisions to the License Renewal Rule.[149] In the 1995 SOC, the Commission discussed what it meant by the use of the terms "active" and "passive" in the context of license renewal.[150] Distinguishing certain prior industry concepts of "passive" structures and components, the Commission developed its own "description of 'passive' characteristics of structures and components."[151] To be considered "passive," the Commission clarified that a structure or component must (1) be susceptible to aging degradation that is not readily monitorable and (2) perform its intended function without moving parts or *without a change in configuration or properties.*[152] Significantly, the Commission stated that "a change in configuration or properties should be interpreted to include

---

[148] *Id.* at 1-2 (emphasis added).

[149] Craig Decl. at ¶¶ 8-19, 28-34, 37-38.

[150] *Id.* at ¶¶ 8-14; Exh. 1, 1995 Part 54 Revisions, 60 Fed. Reg. at 22,476-78.

[151] Craig Decl. at ¶ 10; Exh. 1, 1995 Part 54 Revisions, 60 Fed. Reg. at 22,477.

[152] Craig Decl. at ¶ 9; Exh. 1, 1995 Part 54 Revisions, 60 Fed. Reg. at 22,477.

a change in state,"[153] even though the term "change of state" is "sometimes found in the literature relating to 'passive.'"[154]

As an example, the Commission indicated that a battery is not passive because it changes its electrolyte properties during use.[155] Furthermore, the performance of a battery (supplying electric current and voltage) is readily monitorable and would not be considered "passive."[156] Similarly, the Commission concluded that a transistor can "change its state," and therefore is not passive, even though it has no moving parts and does not chemically change.[157] The examples listed in 10 C.F.R. § 54.21(a)(1) as excluded from AMR include, but are by no means limited to, pumps, valves, motors, diesel generators, air compressors, pressure indicators, pressure transmitters, relays, batteries, and power supplies.[158] The intended function performed by these structures and components is *dynamic*; *i.e.*, it requires changes in their configuration, properties or state.[159] Moreover, these changes in the structures and components can be readily monitored.[160] For example, the output fluid pressure of a pump, the output voltage and frequency of a diesel generator, the air pressure of a compressor, the output signal of a pressure indicator, the output voltage of a battery, the electrical output of a power supply, the position of a valve, and the status or condition of a relay all can be readily monitored.[161]

---

153 Craig Decl. at ¶ 14; Exh. 1, 1995 Part 54 Revisions, 60 Fed. Reg. at 22,477 (internal quotation marks omitted).

154 Exh. 1, 1995 Part 54 Revisions, 60 Fed. Reg. at 22,477.

155 Craig Decl. at ¶ 14; Exh. 1, 1995 Part 54 Revisions, 60 Fed. Reg. at 22,477.

156 Craig Decl. at ¶ 16; Exh. 1, 1995 Part 54 Revisions, 60 Fed. Reg. at 22,477.

157 Exh. 1, 1995 Part 54 Revisions, 60 Fed. Reg. at 22,477.

158 Craig Decl. at ¶ 16; *see also* 10 C.F.R. § 54.21(a)(1)(i). As Mr. Craig explains, the Commission did not intend the list of AMR-excluded items in Section 54.21(a)(1)(i) to be exhaustive; rather, it anticipated that additional clarification and examples would be provided in NRC guidance documents. Craig Decl. at ¶ 17; Exh. 1, 1995 Part 54 Revisions, 60 Fed. Reg. at 22,479.

159 Craig Decl. at ¶ 16.

160 *Id.*

161 *Id.*

In concluding that transformers are not passive components subject to AMR under Section 54.21(a)(1)(i), the Staff fully explained the technical and regulatory bases for its position. The Staff, thus, already has prepared and documented the explanation and justification sought by the Board relative to the exclusion of transformers from AMR. As Mr. Craig explains, the Staff has conveyed this position to the ACRS and the Commission and met with no objections.[162] And, no less significantly, the Staff has consistently applied this position in every one of its approvals of a license renewal application since the very first application was submitted on April 10, 1998, for Calvert Cliffs Units 1 and 2.[163] Every subsequent LRA approved by the NRC similarly has concluded that transformers are not subject to AMR under 10 C.F.R. Part 54.[164]

In short, the conclusions reached by Dr. Dobbs and Mr. Craig are fully consistent with, and further corroborate, the settled NRC Staff position that transformers are active components because they function through a readily monitorable "change in state." Entergy's experts (and previously the Staff)—following explicit Commission guidance—have provided the "legally binding justification" sought by the Board to exclude transformers from AMR. The "subjective belief or unsupported speculation" of Mr. Blanch, in stark contrast, provides no basis for further

---

[162] *Id.* at ¶¶ 29-31; *see also* SECY-01-0157, Rulemaking Issue (Negative Consent), License Renewal Rulemaking (Aug. 17, 2001), *available at* ADAMS Accession No. ML011990176; SRM-SECY-01-0157, Staff Requirements Memorandum, SECY-01-0157, License Renewal Rulemaking (Sept. 5, 2001), *available at* ADAMS Accession No. ML012480330.

[163] Craig Decl. at ¶ 28. The Calvert Cliffs LRA discussed the first integrated plant assessment, which concluded that electrical transformers (i) are in the scope of the license renewal as defined in Section 54.4, but (ii) are not subject to the AMR requirements of Section 54.21 (a)(1). *Id.* The NRC issued its safety evaluation report in December 1999, and the approved renewed licenses for Calvert Cliffs Units 1 and 2 in 2000. *See* NUREG-1705, Safety Evaluation Report Related to the License Renewal of Calvert Cliffs Nuclear Power Plant, Units 1 and 2, Docket Nos. 50-317 and 50-318, at 2-92, 2-98, 2-102 (Dec. 1999), *available at* ADAMS Accession No. ML003674053.

[164] *Id.* *See* Status of License Renewal Applications and Industry Initiatives, *available at* http://www.nrc.gov/reactors/operating/ licensing/renewal/applications.html (containing previously-approved license renewal applications and the NRC's associated final safety evaluation reports).

proceedings on this clear-cut matter.[165] Accordingly, the Board should grant summary disposition of NYS-8 because there is no genuine issue of material fact.

### B. NYS's Allegations that Failure to Properly Manage Aging of Transformers Could Result in Beyond-DBA Accidents and Loss of Emergency Power Present No Genuine Issue of Material Fact

NYS and Mr. Blanch also assert that failure to manage aging degradation of transformers could result in beyond-DBA events (with offsite doses exceeding Part 100 limits) and a loss of emergency power to the 480 volt safety and 6.9kV busses, including all station blackout loads.[166] This assertion is immaterial. The Board admitted NYS-8 only "to the extent that it questions *the need for an AMP* for safety-related electrical transformers that are required for compliance with 10 C.F.R. §§ 50.48 and 50.63."[167] Consistent with the scope of Part 54, the Board admitted NYS-8 insofar as raises a discrete aging-management issue; *i.e.*, the alleged need for an AMP.[168] As demonstrated above, such transformers do *not* require an AMP under Part 54. Accordingly, NYS's allegations regarding beyond-DBA events and loss of emergency power present no genuine issue of material fact.

### C. NYS's Allegation that Entergy Has Excluded "Switchyard Transformers" from the Scope of License Renewal Presents No Genuine Issue of Material Fact

Based on its review of a then-draft RAI, NYS also asserted that Entergy has improperly excluded unspecified "switchyard transformers" from the scope of license renewal.[169] This claim is without merit. As explained above, Entergy used a bounding approach to scoping for

---

165 *DCS*, LBP-05-04, 61 NRC at 80 (quoting *Daubert,* 509 U.S. at 589).

166 NYS Petition at 104; Blanch Decl. at ¶¶ 22-24. Notably, in so asserting, NYS and Mr. Blanch merely paraphrase the language of 10 C.F.R. § 54.4(a), which sets forth the function-based criteria for determining which plant-specific SSCs are within the scope of Part 54. *Compare* NYS Petition at 103-04 *and* Blanch Decl. ¶ 20 *with* 10 C.F.R. § 54.4(a).

167 *Indian Point*, LBP-08-13, 68 NRC at 89 (emphasis added).

168 *Compare* NYS Petition at 103-04) *and* Blanch Decl. at¶ 20 *with* 10 C.F.R. § 54.4(a).

169 NYS Petition at 105; NYS Reply at 59-60.

electrical and I&C equipment.[170] All plant transformers were included in scope for license renewal. Entergy also included in the scope of license renewal switchyard components, including the associated transformers, which restore offsite power following an SBO.[171] While included in-scope for license renewal, IP2 and IP3 transformers (including those required for compliance with the fire protection and SBO requirements of Sections 50.48 and 50.63) are active components and, accordingly, not subject to AMR under Part 54. Therefore, no AMP is required. NYS's allegation does not present a genuine issue of material fact.

## VI. CONCLUSION

As demonstrated above, the allegation that Entergy has improperly failed to provide an AMP for transformers necessary for compliance with 10 C.F.R. §§ 50.48 and 50.63 lacks merit. All transformers are *active* components because they perform their intended function through a change in configuration or properties, which the Commission has explicitly stated should be interpreted to include "a change in state." They are *not* passive and long-lived structures or components and, therefore, are not subject to AMR under 10 C.F.R. Part 54. Therefore, an AMP is not required for any IP2 or IP3 transformers. NYS's claim to the contrary is entirely unsupported and without technical or legal basis. Accordingly, there is no genuine dispute of material fact to litigate. Contention NYS-8 should be dismissed as a matter of law.

---

[170] Rucker Decl. at ¶¶ 10-11; Exh. 2, LRA at 2.2-1, 2.5-1.

[171] Rucker Decl. at ¶¶ 12-13.

## CERTIFICATION OF CONSULTATION UNDER 10 C.F.R. § 2.323(b)

In accordance with 10 C.F.R. §2.323(b), counsel for Entergy discussed this Motion with counsel for NYS and counsel for the NRC Staff prior to its submittal. Entergy and NYS did not reach agreement on an acceptable means of resolving the matters raised in this Motion. NYS indicated that it appreciated the opportunity to consult with Entergy on this matter, but that it anticipated that NYS would oppose this Motion. The NRC Staff stated that it does not oppose this Motion.

Respectfully submitted,


Kathryn M. Sutton, Esq.
Paul M. Bessette, Esq.
MORGAN, LEWIS & BOCKIUS LLP
1111 Pennsylvania Avenue, N.W.
Washington, D.C. 20004
Phone: (202) 739-5738
E-mail: ksutton@morganlewis.com
E-mail: pbessette@morganlewis.com

Martin J. O'Neill, Esq.
MORGAN, LEWIS & BOCKIUS LLP
1000 Louisiana Street
Suite 4000
Houston, TX 77002
Phone: (713) 890-5710
E-mail: martin.oneill@morganlewis.com

COUNSEL FOR ENTERGY NUCLEAR OPERATIONS, INC.

William C. Dennis, Esq.
Entergy Nuclear Operations, Inc.
440 Hamilton Avenue
White Plains, NY 10601
Phone: (914) 272-3202
Fax: (914) 272-3205
E-mail: wdennis@entergy.com


Dated in Washington, D.C.
this 14th day of August 2009

DB1/63260566

UNITED STATES OF AMERICA
NUCLEAR REGULATORY COMMISSION

BEFORE THE ATOMIC SAFETY AND LICENSING BOARD

| | | |
|---|---|---|
| In the Matter of | ) | Docket Nos. 50-247-LR and 50-286-LR |
| ENTERGY NUCLEAR OPERATIONS, INC. | ) | ASLBP No. 07-858-03-LR-BD01 |
| (Indian Point Nuclear Generating Units 2 and 3) | ) | August 14, 2009 |

## STATEMENT OF MATERIAL FACTS

Entergy Nuclear Operations, Inc. ("Entergy") submits this statement of undisputed material facts in support of its Motion for Summary Disposition of Contention NYS-8.

### A. Transformer Operation and Transformer Properties

1. Transformer operation is based on two scientific principles. First, an electric current flowing through a wire will produce a magnetic field. Second, a changing magnetic field within a coil of wire will produce a voltage across the ends of the coil. Dobbs Decl. at ¶ 7. Thus, in its most basic form, a transformer is formed by winding two coils of wire around the same iron form, called a core. *Id.* at ¶ 9.

2. One of the coils of wire, the primary, if excited by an alternating current, will create a magnetic field around the wire. Because the wire is wrapped in a coil, the magnetism produced by each wrap of wire combines with the magnetic fields emanating from the other wraps to produce a strong magnetic field within the core. *Id.* at ¶ 9.

3. The alternating current that flows through the winding establishes a time-varying magnetic flux (*i.e.*, the strength of the magnetic field is continuously increasing or decreasing), some of which links or "couples" with the secondary winding and induces an alternating voltage across that coil. The magnitude of this voltage is proportional to the ratio of the number of turns on the secondary and primary coils. This is referred to as the "turns ratio." *Id.* at ¶¶ 9-11, 18.

4. If the secondary winding is connected to a load and current is allowed to flow into that load, then power will be transferred to that load. Thus, the essence of a transformer is the process by which it accepts voltage and current at an input and then "transforms" that voltage and current to different values at its output(s). *Id.* at ¶¶ 6, 14; Craig Decl. at ¶¶ 21-22.

5. A transformer performs its intended function by stepping down voltage from a higher to a lower value, stepping up voltage from a lower to a higher value, or providing isolation to a load. Dobbs Decl. at ¶ 18; Craig Decl. at ¶ 26.

6. The voltages and currents associated with a transformer are integral properties of a transformer. Without voltage and current, there is no transformer operation. The voltages, current, and the associated magnetic field all must vary in time to achieve transformer operation. Moreover, the voltage and currents vary whenever load conditions change. Dobbs Decl. at ¶¶ 16, 21-22. Therefore, all transformers perform their intended functions through a change in state (*i.e.,* changes in voltage and current properties). *Id.* at ¶ 52.

7. Neither the complexity of transformer design nor the occurrence of electrical and magnetic losses during operation alters these conclusions. These scientific principles apply equally to all transformers from the smallest electronic unit to the largest distribution transformer. *Id.* at ¶ 21.

8. The voltages, currents, and heat signature of a transformer are all properties that are peculiar to a given unit, change as the transformer performs its intended function, and are readily monitorable while the transformer is performing its intended function, providing an indication as to the operational health of a transformer. For example, the temperature of a transformer or its infrared signature, which changes with load, can be monitored to verify proper operation. *Id.* at ¶¶ 25-27.

## B. <u>Ongoing Monitoring and Maintenance of Electrical Transformers</u>

9. The potential degradation of the ability of a transformer to perform its intended function is monitorable by changes in the electrical performance of the transformer and/or its associated circuits. Moreover, certain IP2 and IP3 transformers, including those necessary for compliance with 10 C.F.R. § 50.48 and 50.63, are subject to direct, ongoing surveillance, monitoring, maintenance, and inspection. Rucker Decl. at ¶ 19.

10. For certain transformers, particularly large power transformers, instrumentation is provided to detect degrading conditions. For example, if voltage conditions exceed defined acceptable ranges, then an alarm condition will be sounded automatically to alert operators to the condition (*e.g.*, excessive load on transformer, transformer fault, undervoltage conditions). These indicators or alarms appear on supervisory panels in the IP2 and IP3 control rooms or on individual transformer panels that are checked during frequent operator rounds. Established station procedures require appropriate corrective actions if transformer performance is outside acceptable ranges. Such procedures are included in activities such as personnel training and quality assurance audits, and subject to periodic NRC inspection. *Id.* at ¶ 20.

11. Entergy has implemented preventive maintenance, inspection, and surveillance programs and procedures to manage "active" systems and components, including transformers required for compliance with 10 C.F.R. § 50.48 and 50.63. These programs and procedures, some of which are necessary to comply with the NRC's Maintenance Rule (10 C.F.R. § 50.65), are intended to identify and correct potential degradation (including aging) issues associated with active systems and components. These activities include, as appropriate, periodic cleaning and inspections of transformers, as well as instrument checks, functional tests, and calibration functional tests. The data and information from such tests and performance monitoring programs are analyzed and trended to detect potential degradation of transformer performance (*e.g.*, a change in the electrical performance of the transformer or the associated circuits). *Id.* at ¶ 21.

## C. <u>The Scoping and Screening Requirements of 10 C.F.R. Part 54</u>

12. The NRC's License Renewal Rule (10 C.F.R. Part 54) for nuclear power plants is based on two well-established principles. First, with the exception of age-related degradation unique to life extension for certain passive and long-lived structures and components, the NRC regulatory process is deemed adequate to ensure that currently operating plants will continue to maintain adequate levels of safety during the period of extended operation. Second, each plant's current licensing basis ("CLB") is required to be maintained during the renewal term in the same manner and to the same extent as during the original licensing term. Final Rule, Nuclear Power Plant License Renewal; Revisions, 60 Fed. Reg. 22,461, 22,464 (May 8, 1995).

13. NRC regulations require a license renewal applicant to (1) identify the structures, systems, and components ("SSCs") within the scope of 10 C.F.R. Part 54 and (2) identify the

structures and components subject to aging management review ("AMR") based on their intended functions. These two processes are commonly referred to, respectively, as "scoping" and "screening." Rucker Decl. at ¶ 6; 10 C.F.R. §§ 54.4, 54.21.

14. The purpose of "scoping" is to identify all plant SSCs that are safety-related or whose failure could affect safety-related functions, or that are relied on to demonstrate compliance with the NRC regulations specified in 10 C.F.R. 54.4. Rucker Decl. at ¶ 6.

15. The purpose of "screening" process is to determine which in-scope structures and components are subject to AMR. Rucker Decl. at ¶¶ 9, 14; 10 C.F.R. § 54.21(a)(1).

16. Part 54 excludes from the scope of AMR those structures and components that (1) perform their intended functions with moving parts or a change in configuration or properties or (2) are replaced based on qualified life or specified time period. Rucker Decl. at ¶ 8; 10 C.F.R. § 54.21(a)(1)(i)-(ii).

17. Only passive, long-lived structures and components within the scope of license renewal are subject to AMR. Passive structures and components are those that perform their function without a change in configuration or properties. Long-lived items are those that are not subject to replacement based on a qualified life or specified time period. Rucker Decl. at ¶ 8; Craig Decl. at ¶¶ 9-10; 10 C.F.R. §54.21(a)(1)(i)-(ii); Final Rule, Nuclear Power Plant License Renewal; Revisions, 60 Fed. Reg. at 22,477-78.

18. The Commission has stated that "a change in configuration or properties" should be interpreted to include "a change in state." Dobbs Decl. at ¶ 42; Craig Decl. at ¶ 14; 60 Fed. Reg. at 22,477. Therefore, a structure or component that performs an "active" function, including one that can "change its state," is not subject to AMR. Dobbs Decl. at ¶ 44-45; Craig Decl. at ¶ 14, Final Rule, Nuclear Power Plant License Renewal; Revisions, 60 Fed. Reg. at 22,477.

19. Part 54 lists examples of structures and components that are excluded from AMR because they perform "active" functions. The examples of AMR-excluded systems or components include, "but are not limited to," "pumps (except casing), valves (except body), motors, diesel generators, air compressors, snubbers, the control rod drive, ventilation dampers, pressure transmitters, pressure indicators, water level indicators, switchgears, cooling fans,

transistors, batteries, breakers, relays, switches, power inverters, circuit boards, battery chargers, and power supplies." 10 C.F.R. § 54.21(a)(1)(i); Craig Decl. at ¶ 16.

## D. The "Scoping" Process as Applied to IP2 and IP3 Transformers

20. During the scoping process, Entergy used a bounding approach for plant electrical and instrumentation and control ("I&C") systems and components by including in the scope of license renewal all plant electrical and I&C systems (as well as electrical and I&C components in mechanical systems). Consequently, Entergy included in the scope of license renewal all plant electrical equipment, including *all* plant transformers, including those that perform a function necessary to demonstrate compliance with 10 C.F.R. §§ 50.48 and 50.63. LRA Tables 2.2-1b-IP2 and 2.2-1b-IP3 list the electrical and I&C systems within the scope of license renewal for IP2 and IP3, respectively. Rucker Decl. at ¶¶ 10-11; LRA at 2.2-12 to 2.2-16.

21. In addition to the plant electrical SSCs, and in accordance with NRC guidance, Entergy included in the scope of license renewal switchyard components (including the associated transformers) that restore offsite power following a station blackout ("SBO") event. Rucker Decl. at ¶¶ 12-13; LRA at 2.5-1 to 2.5-2.

22. By using a bounding approach to scoping for electrical and I&C equipment, Entergy included in the scope of license renewal all electrical equipment, including all transformers that perform a function necessary to demonstrate compliance with 10 C.F.R. §§ 50.48 and 50.63. Rucker Decl. at ¶¶ 11-13.

## E. The "Screening" Process as Applied to IP2 and IP3 Transformers

23. Entergy grouped the total population of in-scope electrical components into component types, and compared these component types to those in NEI 95-10, Appendix B to identify passive component types. The passive component types were identified as commodity groups, which include similar electrical and I&C components with common characteristics. Entergy then identified component-level intended functions of the commodity groups. Rucker Decl. at 15; LRA at 2.5-2.

24. As Entergy examined the intended functions of these commodity groups, certain commodity groups and specific plant systems were eliminated from further review based on Section 54.21(a)(1)(i). In conducting this process, Entergy followed NRC regulations and the

recommendations of NEI 95-10, "Industry Guideline for Implementing the Requirements of 10 C.F.R. Part 54 – The License Renewal Rule," Revision 6 (June 2005). The NRC has endorsed this approach in Regulatory Guide 1.188, "Standard Format and Content for Applications to Renew Nuclear Power Plant Operating Nuclear Power Plant Operating Licenses," Revision 1 (September 2005). Rucker Decl. at ¶¶ 14-15; LRA at 2.5-2.

25. Appendix B to NEI 95-10 indicates that transformers are not subject to AMR in accordance with 10 C.F.R. § 54.21(a)(1)(i) because they are "active" components. Table 2.1-5 of the NRC's Standard Review Plan for license renewal also indicates that transformers are not passive structures or components subject to AMR under 10 C.F.R. § 54.21(a)(a)(i). Rucker Decl. at ¶ 17; NUREG-1800, Revision 1, "Standard Review Plan for Review of License Renewal Applications for Nuclear Power Plants" at 2.1-23 (Table 2.1-5, Item 104) (Sept. 2005).

26. Entergy identified two passive electrical and I&C commodity groups as meeting the 10 C.F.R. § 54.21(a)(1)(i) criterion and, therefore, as subject to AMR. Those commodity groups are (1) high voltage insulators and (2) cables and connections, bus, electrical portions of electrical and I&C penetration assemblies, fuse holders outside of cabinets of active electrical systems and components. These two commodity groups were further divided into the component types and commodity groups listed on page 2.5-2 of the LRA. LRA Table 2.5-1 lists the specific component types or commodity groups that are subject to AMR along with their intended functions. Rucker Decl. at ¶ 16; LRA at 2.5-2 to 2.5-4.

27. Entergy determined that all other electrical and I&C commodity groups are active and, therefore, not subject to AMR. Those other active electrical and I&C commodity groups include transformers. Rucker Decl. at ¶ 17.

28. The NRC Staff published its Final SER for the IP2/IP3 LRA on August 12, 2009. Safety Evaluation Report Related to the License Renewal of Indian Point Nuclear Generating Unit Nos. 2 and 3, Docket Nos. 50-247 and 50-286, Entergy Nuclear Operations, Inc. (Aug. 12, 2009). The Final SER concludes that Entergy "has adequately identified the electrical and I&C component commodity groups components within the scope of license renewal, as required by 10 CFR 54.4(a), and those subject to an AMR, as required by 10 CFR 54.21(a)(1)." *Id.* at 2-225. The Staff did not conclude that any IP2 or IP3 transformers are subject to AMR, or that an AMP is required for transformers, under 10 C.F.R. Part 54. Rucker Decl. at ¶ 18.

## F. NRC Staff's Position on Whether Transformers Are Subject to AMR

29. In a September 19, 1997 letter signed by the Director of the NRC's License Renewal Project Directorate, the NRC Staff recommended revising Appendix B of NEI 95-10 to indicate that transformers "do not require an aging management review." In reaching this conclusion, the Staff considered the discussion of active and passive components and structures in the Statement of Consideration ("SOC") accompanying the 1995 revisions to the License Renewal Rule. Craig Decl. at ¶¶ 25-26; Letter from Christopher Grimes, Director, License Renewal Project Directorate, NRC, to Douglas J. Walters, NEI, Determination of Aging Management Review for Electrical Components (Sept. 19, 1997) ("NRC 1997 Letter").

30. In particular, the NRC Staff's 1997 Letter states:

> Based on the considerable discussion provided in the rule and SOC, the staff compared [transformers] . . . with the examples explicitly provided in the rule in terms of how the performance of their intended functions would be achieved and whether aging degradation of these components would be readily monitored using currently available techniques, in a similar way by which the examples in the rule (circuit breakers, relays, switches, etc.) would be monitored.

Craig Decl. at ¶ 26; NRC 1997 Letter at 2.

31. The NRC Staff concluded in the 1997 Letter that "[t]ransformers perform their intended function through a change in state similar to switchgear, power supplies, battery chargers, and power inverters, which have been excluded in §54.21(a)(1)(i) from an aging management review," and that "[a]ny degradation of the transformer's ability to perform its intended function is readily monitorable by a change in the electrical performance of the transformer and the associated circuits." Craig Decl. at ¶ 26; NRC 1997 Letter at 2.

32. NEI revised Appendix B to NEI 95-10 to incorporate the recommendation of the Staff that transformers be excluded from AMR, because they do not qualify as passive, long-lived structures or components. The NRC Staff endorsed NEI 95-10 in Regulatory Guide 1.188. Craig Decl. at ¶ 27; Rucker Decl. at ¶¶ 14-15.

33. The Staff has conveyed this position to the Commission and the Advisory Committee on Reactor Safeguards. Craig Decl. at ¶¶ 29-31. In SECY-01-0157, dated August

17, 2001, the Staff explicitly referred to transformers as "active components" that "are not subject to the license renewal requirements." Craig Decl. at ¶¶ 30-31; SECY-01-0157, Rulemaking Issue, License Renewal Rulemaking (Aug. 17, 2001).

34. In a Staff Requirements Memorandum issued on September 5, 2001, the Commission concurred with the Staff recommendation that no additional changes to Part 54 be pursued at that time. The Commission expressed no objection to the Staff's explicit characterization of transformers as "active components" that are not subject to AMR under Part 54. Craig Decl. at ¶ 32; Staff Requirements Memorandum, SECY-01-0157, License Renewal Rulemaking (Sept. 5, 2001), *available at* ADAMS Accession No. ML012480330.

35. The NRC issued the first renewed operating licenses under Part 54, for Calvert Cliffs Units 1 and 2, on March 23, 2000. That application and every other license renewal application subsequently reviewed and approved by the NRC has reflected the determination that transformers are not subject to AMR under Part 54. Craig Decl. at ¶ 28, 34.

Respectfully submitted,

Kathryn M. Sutton, Esq.
Paul M. Bessette, Esq.
MORGAN, LEWIS & BOCKIUS LLP
1111 Pennsylvania Avenue, N.W.
Washington, D.C. 20004
Phone: (202) 739-5738
E-mail: ksutton@morganlewis.com
E-mail: pbessette@morganlewis.com

Martin J. O'Neill, Esq.
MORGAN, LEWIS & BOCKIUS LLP
1000 Louisiana Street
Suite 4000
Houston, TX 77002
Phone: (713) 890-5710
E-mail: martin.oneill@morganlewis.com

COUNSEL FOR ENTERGY NUCLEAR OPERATIONS, INC.

William C. Dennis, Esq.
Entergy Nuclear Operations, Inc.
440 Hamilton Avenue
White Plains, NY 10601
Phone: (914) 272-3202
Fax: (914) 272-3205
E-mail: wdennis@entergy.com

Dated in Washington, D.C.
this 14th day of August 2009

DB1/63153465

UNITED STATES OF AMERICA
NUCLEAR REGULATORY COMMISSION

BEFORE THE ATOMIC SAFETY AND LICENSING BOARD

| | | |
|---|---|---|
| In the Matter of | ) | Docket Nos. 50-247-LR and 50-286-LR |
| ENTERGY NUCLEAR OPERATIONS, INC. | ) | ASLBP No. 07-858-03-LR-BD01 |
| (Indian Point Nuclear Generating Units 2 and 3) | ) | August 12, 2009 |

**DECLARATION OF STEVEN E. DOBBS IN SUPPORT OF ENTERGY'S MOTION FOR SUMMARY DISPOSITION OF NEW YORK STATE CONTENTION 8**

Steven E. Dobbs states as follows under penalties of perjury:

## I. INTRODUCTION

1. I am a self-employed electrical engineering consultant. I hold a Professional Engineer (P.E.) license in the State of Arkansas.

2. My education and professional experience are summarized in the *curriculum vitae* attached to this declaration. I have over 35 years work experience, 16 years of which have been in the nuclear power industry. I hold a Bachelor of Science (B.S.) degree in Physics from Arkansas Tech University, a Master of Science (M.S.) degree in Electrophysics from George Washington University, and a Doctor of Philosophy (Ph.D.) in Electrical Engineering from the University of Arkansas.

3. I taught in the Engineering Department at Arkansas Tech University from 1977 until 1990. During that time period, I taught classes in Electrical Machinery that covered the theory and operation of transformers, motors, and generators. For a period of time, I directed the laboratory associated with that class. From 1990 to 2004, I worked as an electrical engineer,

including Senior Staff Engineer, for Entergy Operations, Inc. at Arkansas Nuclear One, providing engineering support for computer and electronic systems throughout the plant.

4. I am familiar with New York State ("NYS") Contention 8 ("NYS-8"). As admitted into the proceeding by the Atomic Safety and Licensing Board, NYS-8 alleges: "The LRA for IP2 and IP3 violates 10 C.F.R. §§ 54.21(a) and 54.29 because it fails to include an aging management plan for each electrical transformer whose proper function is important for plant safety." NYS argues that these transformers are subject to aging management review ("AMR") for license renewal because, by New York's account, transformers perform their safety function without moving parts and without a change in configuration or properties. That argument is erroneous.

5. My declaration addresses the nature and operation of transformers. I will demonstrate that transformers perform their intended function with a "change in configuration or properties" and, therefore, are properly excluded from AMR under 10 C.F.R. Part 54.

## II. THEORY OF TRANSFORMER OPERATION

6. This section provides a simplified explanation of the scientific principles involved in transformer construction and operation. The overall purpose of the discussion is to demonstrate that the very essence of a transformer is the process by which it accepts voltage and current at an input and then "transforms" that voltage and current to different values at its output(s). Thus, the voltages and currents associated with a transformer, which change as the transformer performs its intended function, are tied to the transformer at such a basic level that they must be considered to be properties of the transformer. Moreover, these properties will be shown to change during transformer operation. Paragraphs 7 through 15 are a short explanation of the scientific and mathematical basis for transformer operation. The discussion beginning at

paragraph 15 demonstrates how the voltage and current properties of a transformer change during operation.

7. The transformer is based on two scientific principles. First, an electric current flowing through a wire will produce a magnetic field. Second, a changing magnetic field within a coil of wire will produce a voltage across the ends of the coil.

8. A third scientific principle that affects the design of transformers is that magnetism is more easily induced into certain types of materials. The magnetic permeability, normally designated as $\mu$, is a measure of how easily a material is magnetized. The larger the value of $\mu$, the easier it is to magnetize the material. Air has a very low magnetic permeability, whereas iron and steel have very high values of permeability. Thus, it requires less energy to create or maintain a magnetic field in iron or steel than in air.

9. In its simplest form, a transformer is formed by winding two coils of wire around the same iron form, called a core. An alternating current is used to excite the "primary" coil. This current creates a magnetic field around the wire. Because the wire is wrapped in a coil, the magnetism produced by each turn or wrap of wire adds to the magnetic fields from the other wraps to produce a strong magnetic field within the core (*i.e.*, the greater the number of turns around the iron core the greater the strength of the magnetic field). Because the core is iron and has a high permeability, the magnetism easily permeates the entire core. Because alternating current is used to drive the primary coil, the magnetic field produced in the core has a time-varying magnitude.

10. Farady's Law relates the voltage used to drive the current through the primary wire to the magnetic flux produced in the core by the equation:

$$V_p = N_p \, {}^{d\Phi}/_{dt} \qquad \text{where}$$

$V_P$ is the voltage applied to the primary coil,

$N_P$ is the number of turns of wire in the primary coil, and

$d\Phi/dt$ is the time-changing magnetic field in the core produced by the current in the primary coil.

11. The time-varying magnetic flux created by the primary winding permeates the core. Because the secondary winding is wound around the same core, the changing magnetic field inside the core excites the secondary winding as well. Again, Faraday's Law expresses the relation between the changing magnetic flux in the core and the voltage produced at the winding terminals:

$$V_S = N_S \, d\Phi/dt \qquad \text{where}$$

$V_S$ is the voltage created at the terminals of the secondary winding,

$N_S$ is the number of turns of wire in the secondary coil, and

$d\Phi/dt$ is the time-changing magnetic field in the core produced by the current in the primary coil.

12. Because the equations depicted in paragraphs 10 and 11 both contain the identical term $d\Phi/dt$, they can be solved for that term and then set equal to each other to produce:

$$V_S/N_S = V_P/N_P$$

13. This equation can be rearranged to provide the classic transformer equation:

$$V_S/V_P = N_S/N_P$$

14. If the secondary winding is connected to a load and current is allowed to flow into that load, then power will be transferred to that load. If the transformer is considered "lossless," then the power supplied by the primary winding will be equal to the power consumed by the load connected to the secondary. In equation form, the conservation of energy can be expressed as

$$P_{Primary} = I_P V_P = I_S V_S = P_{Secondary}$$

15. Solving the equation in 14 for the ratio of the voltages leads to the following relation:

$$V_S/V_P = N_S/N_P = I_P/I_S \quad \text{where}$$

$V_P$ is the voltage applied to the primary coil,

$N_P$ is the number of turns of wire in the primary coil,

$I_P$ is the primary coil current,

$V_S$ is the voltage created at the terminals of the secondary winding,

$N_s$ is the number of turns of wire in the secondary coil, and

$I_S$ is the current in the secondary winding.

16. The equation in paragaph 15 is the mathematical statement of transformer operation. Without voltage and current, there is no transformer operation. Therefore, voltage and current are integral properties of a transformer.

17. As shown in the derivation of this equation, the voltages, currents, and the associated magnetic field all must vary in time to achieve transformer operation. Therefore, all voltages and currents associated with a transformer are alternating current ("AC") values, which vary continuously in time.

18. The following table shows how applying the results of the equation in paragaph 15 leads to the different types of transformers in common use:

| $N_S/N_P$(Turns Ratio) | $V_S$ in terms of $V_P$ | $I_S$ in terms of $I_P$ | Type of Transformer |
|---|---|---|---|
| 10 | 10 $V_P$ | 0.1 $I_P$ | Step-up |
| 1/10 | 0.1 $V_P$ | 10 $I_P$ | Step-down |
| 1 | $V_p$ | $I_P$ | Isolation if windings not electrically connected |

Thus, as the ratio of turns increases (*i.e.*, there are relatively more secondary turns as compared to primary turns), the voltage at the terminals of the secondary winding increases. If the ratio exceeds one, voltage is stepped up at the secondary terminals. If the ratio is less than one, voltage is stepped down.

19. The following table shows an example of the AC voltages and currents in a typical step-up transformer having a turns ratio of 10 under various load conditions.

| Load Condition | $V_P$ | $V_s$ | $I_p$ | $I_s$ |
|---|---|---|---|---|
| 0 | 0 | 0 | 0 | 0 |
| 0.5 | 100 VAC | 1000 VAC | 500 AAC | 50 AAC |
| 1 | 100 VAC | 1000 VAC | 1000 AAC | 100 AAC |

Thus, as the load increases at the primary terminals in a step-up configuration, the current output at the secondary terminals will increase in proportion to the increased load.

20. The table above (paragaph 19) demonstrates that the voltage and current properties of a transformer change depending on the load condition of the transformer.

21. The above discussion was based on the simplest possible transformer that was assumed to be "lossless." The basic principles, however, do not change by adding complexity to the design or by considering electrical and magnetic losses. That is to say, these same principles apply equally to all transformers from the smallest electronic unit to the largest distribution transformer. Neither the way the transformer is constructed nor the way in which it is used alters the principles and conclusions set forth herein. Consideration of losses will add variables and complexities to the calculations, but it will not change the underlying principles or the basic equations.

22. In summary, a transformer accepts voltage and current at an input and changes that voltage and current to some other value at its output(s). All of the voltages and currents

must vary in time. The voltages and currents also vary whenever load conditions change. Therefore, a transformer cannot perform its intended function without changes in its voltage and current properties.

## III. PROPERTIES OF A TRANSFORMER

23. A transformer basically is a series of wire windings around some type of core. The core usually is constructed of a material that has a high magnetic permeability, such as iron or steel. There can be many windings or as few as one. However, regardless of the number or arrangement of the windings, the basic transformer equation described in paragraph 15 above will be true.

24. The currents in the windings of a transformer are quantities that can be measured. When a transformer is performing its intended function, currents will be present in some or all of the windings. The currents in the transformer windings will vary depending on the load placed on the transformer.

25. Voltage, current, and the winding turns ratios are all properties of a transformer. These properties are easily monitored while the transformer is performing its intended function and provide an indication as to the operational health of the transformer.

26. All transformers have internal losses, which result in heating of the unit. A normally functioning transformer will stabilize at a temperature dependent on its environment. The temperature of a transformer or its infrared signature can be monitored as a method of verifying proper operation. The heat signature of a transformer is a property that changes with load as the transformer operates.

27. The voltages, currents, and heat signature of a transformer are all traits that are peculiar to the unit, and all of these properties change as the transformer performs its intended function.

## IV. DISCUSSION OF 10 C.F.R. § 54.21(A)(1)(I)

28. Section 54.21(a)(1)(i) states, in pertinent part: "Structures and components subject to an aging management review shall encompass those structures and components—(i) that perform an intended function, as described in §54.4, without moving parts or without a change in configuration or properties."

29. Section 54.21(a)(1)(i) includes a list of structures and components that are subject to AMR, as well as a list of structures and components that may be excluded. It explicitly states that neither of these lists is all-inclusive.

30. Transformers do not appear in either list.

31. Based on the facts of Sections II and III above, voltage, current, and heat signature are all properties of a transformer. When the transformer changes from an idle state to an active state, the voltages and currents change. Also, the currents and heat signature will change with a variation of the load. Because transformers perform their intended function with a change in properties, they are excluded from an AMR according to the defining statement in § 54.21(a)(1)(i).

32. This conclusion is confirmed by comparing transformers to the examples on the included and excluded lists under § 54.21(a)(1)(i). The included list contains such items as the reactor vessel, pressure boundaries, piping, component supports, penetrations, electrical cables, and electrical cabinets. The common characteristic of all of these items is that each one's ability to perform its intended function cannot be directly verified by monitoring a measurable property. Instead, indirect measurements, tests, and observations are used to predict the serviceability of the item based on an analysis of this secondary information. For example, the ability of a pipe to perform its intended function (*e.g.*, transporting water) is monitored *indirectly* by, for example, periodically measuring the thickness of the pipe's wall and observing it for signs of corrosion.

33. By contrast, it is possible to *directly* measure performance of the intended function of all the items on the excluded list. The excluded list contains such items as motors, diesel generators, pressure transmitters, pressure indicators, transistors, batteries, breakers, relays, switches, power inverters, battery chargers, and power supplies. The serviceability of these items is determined by making direct measurements of the intended function of the items. For example, the intended function of a power supply is to provide a specified current at a specified voltage. The ability of a power supply to perform its intended function can be verified by loading it to the desired current and then measuring the output voltage.

34. In studying these two lists, the closest match to a transformer is a transistor, which is found on the excluded list. A transistor has no moving parts. Its intended function is to receive voltage and current at an input and provide a different voltage and current at an output. The properties of a transistor that change while it is performing its intended function are its input and output voltages and currents. The ability of a transistor to perform its intended function is directly indicated by monitoring these voltages and currents.

35. Like a transistor, a transformer has no moving parts. A transformer's intended function is to receive voltage and current at an input and provide a different voltage and current at one or more outputs. The properties of a transformer that change while it is performing its intended function are its input and output voltages and currents. The ability of a transformer to perform its intended function is directly indicated by monitoring these voltages and currents. Because the transistor and transformer share these characteristics, a transformer also belongs on the excluded list.

## V. THE 1995 STATEMENT OF CONSIDERATION FOR THE 1995 LICENSE RENEWAL RULE

36. The NRC publishes Statements of Consideration ("SOC") with rule changes. The SOC provides historical context and supplementary information that can be used to help interpret the intent of the License Renewal Rule. The SOC for the NRC's 1995 revisions to 10 C.F.R. Part 54 is available at 60 Fed. Reg. 22,461 (May 8, 1995). *See* Exhibit 1.

37. SOC Section II(4) states: "In § 54.21(a), the IPA [integrated plant assessment] process has been simplified. . . . A simplified methodology for determining whether a structure or component requires an aging management review for license renewal has been delineated. Only passive, long-lived structures and components are subject to an aging management review for license renewal." Exh. 1, 60 Fed. Reg. at 22,463.

38. SOC Section III.a.(i) states: "The Commission still believes that mitigation of the detrimental effects of aging resulting from operation beyond the initial license term should be the focus for license renewal." Exh. 1, 60 Fed. Reg. at 22,464.

39. SOC Section III.a.(i) later states: "The Commission has determined that it can generically exclude from the IPA aging management review for license renewal (1) those structures and components that perform *active* functions . . . ." Exh. 1, 60 Fed. Reg. at 22,464 (emphasis added).

40. SOC Section III.d.(v) ("Excluding Structures and Components With Active Functions") states: "Direct verification is practical for active functions such as pump flow, valve stroke time, or relay actuation where the parameter of concern (required function), including any design margins, can be directly measured or observed. For passive functions, the relationship between the measurable parameters and the required function is less directly verified. Passive functions, such as pressure boundary and structural integrity are generally verified indirectly, by

confirmation of physical dimensions or component physical condition . . . ." Exh. 1, 60 Fed. Reg. at 22,471.

41. SOC Section III.f.(i) states: "The Commission has determined that passive structures and components for which aging degradation is not readily monitored are those that perform an intended function without moving parts or without a change in configuration or properties." Exh. 1, 60 Fed. Reg. at 22,477.

42. Section III.f.(i) then states: "Further, the Commission has concluded that 'a change in configuration or properties' should be interpreted to include 'a change in state,' which is a term sometimes found in the literature relating to 'passive.' For example, a transistor can 'change its state' and therefore would not be screened in [as a passive component] under this description." Exh. 1, 60 Fed. Reg. at 22,477.

## VI. APPLICATION OF 1995 SOC PRINCIPLES TO TRANSFORMERS

43. The SOC makes clear that the purpose of license renewal is to identify those structures and components that might experience the detrimental effects of aging resulting from operation beyond the initial license term and that may not be adequately monitored by current programs and activities. Items to be included in a licensee's IPA are classified as "passive."

44. The SOC states that structures and components that perform "active" functions can be generically excluded from the IPA and, thus, from AMR.

45. The SOC defines "active functions" as those where the required function can be "directly measured or observed" and "passive functions" as those where the required function must be verified indirectly. The SOC makes clear that passive structures components do not include those which perform an intended function with a change in configuration or properties, which includes a "change in state."

46. The intended function of a transformer is to accept an input voltage and current, to transform it in some way, and then supply an output voltage and current to one or more loads. All of the parameters of interest can be directly measured. The voltages and currents change as the transformer performs its intended function. Therefore, a transformer performs an active function and should be generically excluded from the IPA.

47. The fact that any transformer, regardless of size or application, is an active component means that all transformers equally should be excluded from the IPA.

## VI. CONCLUSIONS

48. It is not possible to describe transformer operation without referring to the input and output voltages and currents. Therefore, these voltages and currents must be considered to be properties of a transformer.

49. The voltages and currents of a transformer change as the transformer performs its intended function. Therefore, transformers are excluded from the requirement of an AMR by the definition stated in § 54.21(a)(1)(i).

50. Of all of the items listed in § 54.21(a)(1)(i), transformers are most similar to transistors. Transistors are in the excluded list. Transformers likewise should be excluded from an AMR.

51. The SOC for § 54.21(a)(1)(i) provides additional background as to what should be included and excluded in an AMR. Items that are included are classified as "passive." Items that are excluded are classified as "active." Transformers should be classified as active because their required function (transforming voltages and currents) can be directly measured.

52. Because all transformers perform their intended function through a change in state (*i.e.,* changes in voltage and current properties), all transformers are properly excluded from AMR under § 54.21(a)(1)(i).

In accordance with 28 U.S.C. § 1746, I declare under penalty of perjury that the foregoing is true and correct.

Executed on August 12, 2009.

Steven E. Dobbs

Dr. Steven E. Dobbs, P.E.

**Name:** **Steven E. Dobbs**

**Current Position:** **Engineering Consultant, Dobbs & Associates Engr., Inc.**

==========

**Education:**

B.S. Physics, Arkansas Tech University 1971
M. S. Electrophysics, George Washington University 1975
Ph.D. Electrical Engineering, University of Arkansas 1983

==========

**Professional Certificates/Associations:**

Arkansas Professional Engineer, Certificate Number 4931
General Class Radiotelephone Certificate
Arkansas Academy of Electrical Engineering

==========

**Employment History:**

**1979 to Present – Dobbs & Associates Engineering, Inc.** Engineering consulting in electronics and computer applications. Primarily consulting with nuclear power plants since January 2007.

**October 2006 to December 2006** – Research Associate at McMurdo Station, Antarctica. Operated, maintained, and repaired multiple long-term computer-based geophysical experiments. Responded to PI requests as required.

**October 2005 to May 2006** – Research Associate at Palmer Station, Antarctica. Operated, maintained, and repaired multiple long-term computer-based geophysical experiments. Moved experiments from their old facilities to the new IMS (Terra Lab) building. Responded to PI requests as required.

**1990 to 2004 – Entergy Operations, Inc., Arkansas Nuclear One.** Worked in Computer Support Group, Systems Engineering, and Design Engineering providing engineering support for computer and electronic systems throughout the plant. Progressed from Senior Engineer to Senior Lead Engineer to Senior Staff Engineer (highest engineering grade). Formed the Electronics Resource Group in 1999. This group deals with electronics issues at multiple Entergy nuclear plants.

**1977 to 1992 – Arkansas Tech University, Engineering Department.** Taught classes in Engineering, Computer Science, and Management Science. Developed curriculum in Digital Electronic Systems. Helped department gain accreditation by ABET.

Progressed from Instructor to Assistant Professor to Associate Professor to Professor of Engineering (highest academic grade).

**1974 to 1977 – Central Intelligence Agency, Office of ELINT.** Worked in the area of Electronic Intelligence collection. Spent 1976-1977 at a remote collection site in Iran providing engineering support for high tech electronic signal intercept equipment.

**1971 to 1973 – Central Intelligence Agency, Office of Scientific Intelligence.** Prepared estimates of the nuclear capabilities of the communist block countries. Invented a statistically based computer program for estimating fissile material production at gaseous diffusion plants. Held both Top Secret and Q clearances.

==========

**Specific Areas of Experience:**

Programming Experience:

- FORTRAN, PLM, COBOL, RPG, BASIC, Paradox (PAL), LabVIEW, C on industrial class single board computers, RSLogix 5000 ladder logic (Allen Bradley Control Logix)
- ASSEMBLER
- Motorola 6800, Zilog Z-80, Intel 8085, Motorola 68000, HP 21MX, 68HC11

Operating Systems Experience:

- CPM, DOS, Windows, Isis II, HP 21MX, Linux

Applications Experience:

- Word, Excel, Access, Powerpoint, Outlook, Paradox, ORCAD, TurboCAD, Visio, AutoCAD, and others too numerous to mention

Hardware Experience:

- Maintained and repaired wide-band tape recorders, antenna systems, and radio receivers.
- Designed, equipped, and set-up college level electronics laboratories. Wrote experiments and ran laboratory sessions. Repaired equipment when necessary. Ensured that these laboratories met ABET accreditation standards. Laboratories included all of the following: Circuits I, Circuits II, Electronics, Digital Systems Design, Motors and Generators, Auto-CAD, Senior Design Project.
- Configured and repaired S-100/CPM computers.
- Repaired printers

- Configured and built computer systems from S-100 through Pentium.
- Interfaced serial and parallel computer equipment.
- Designed, built, and programmed a single board computer with monitor type operating system.
- Designed, built, and programmed a real-time EKG heart arrhythmia detector.
- Designed, built, and programmed a security transaction unit including a Weigand wire badge scanner and keypad. All units networked to central security system.
- Helped in design of spent fuel crane control system. Wrote the entire controlling program in ladder logic.
- Designed and built several electronic assembly replacements for obsolete nuclear plant equipment including relay modules, power supplies, 7-segment displays, computer I/O interfaces, etc.

UNITED STATES OF AMERICA
NUCLEAR REGULATORY COMMISSION

BEFORE THE ATOMIC SAFETY AND LICENSING BOARD

| | | |
|---|---|---|
| In the Matter of | ) | Docket Nos. 50-247-LR and 50-286-LR |
| ENTERGY NUCLEAR OPERATIONS, INC. | ) | ASLBP No. 07-858-03-LR-BD01 |
| (Indian Point Nuclear Generating Units 2 and 3) | ) | August 12, 2009 |

**DECLARATION OF ROGER B. RUCKER IN SUPPORT OF ENTERGY'S MOTION FOR SUMMARY DISPOSITION OF NEW YORK STATE CONTENTION 8**

Roger Rucker states as follows under penalties of perjury:

## I. INTRODUCTION

1. I am an electrical engineering consultant who provides technical services to Entergy's License Renewal Services Division at the Arkansas Nuclear One office. I am the License Renewal Electrical Lead for a number of Entergy nuclear power plant license renewal projects, including Entergy's effort to renew the operating licenses for Indian Point Nuclear Generating Units 2 and 3 ("IP2" and "IP3").

2. My education and professional experience are summarized in the *curriculum vitae* attached to this declaration. I have over 19 years of work experience, most of which has been in the nuclear power industry. I hold a Bachelor of Science (B.S.) degree in Electrical Engineering from the University of Arkansas. I am a licensed Professional Engineer (P.E.) in the State of Arkansas. I am the Entergy representative for the Nuclear Energy Institute ("NEI") License Renewal Electrical Working Group. I have been a member of several NEI, Electric Power and Research Institute ("EPRI"), and Institute of Electrical and Electronics Engineers ("IEEE")

groups involved with license renewal and aging activities, such as the NEI Medium Voltage Task Force, the NEI License Renewal Task Force, the EPRI cable users group, and the IEEE Standards Association.

3. With regard to the Indian Point license renewal application ("LRA"), I prepared or reviewed the supporting electrical aging management review ("AMR") report, and the electrical portions of the aging management program ("AMP") evaluation report, the scoping and screening report, and the operating experience review report. I reviewed the electrical portions of the LRA prior to submittal, and assisted in preparing responses to electrical-related RAIs and NRC audit and inspection questions. I also supported Entergy at the related ACRS subcommittee meeting held in March 2009. Finally, I reviewed the electrical portions of the NRC Staff's Safety Evaluation Report ("SER") with Open Items and Final SER, issued in January 2009 and August 2009, respectively.

4. I am familiar with New York State ("NYS") Contention 8 ("NYS-8"). As admitted by the Atomic Safety and Licensing Board, NYS-8 "questions the need for an AMP for safety-related electrical transformers that are required for compliance with 10 C.F.R. §§ 50.48 and 50.63." NYS argues that transformers perform their intended function without moving parts or without a change in configuration or properties and, therefore, are subject to AMR under the License Renewal Rule, 10 C.F.R. Part 54.

5. The principal purpose of my declaration is to summarize the process that Entergy used to (1) identify IP2 and IP3 systems, structures and components ("SSCs") within the scope of the License Renewal Rule, and (2) determine which in-scope structures and components are subject to AMR. My declaration focuses, in particular, on the process by which Entergy determined that electrical transformers are not subject to AMR (and, therefore, do not require an AMP). My declaration also briefly explains that transformers, while not subject to AMR under

10 C.F.R. Part 54, are subject to ongoing surveillance and maintenance activities as part of the current licensing bases ("CLBs") for IP2 and IP3.

## II. OVERVIEW OF THE PART 54 "SCOPING" AND "SCREENING" PROCESSES

6. The development of an LRA requires (1) identification of the SSCs within the scope of the License Renewal Rule (also known as "scoping") and (2) identification of the structures and components subject to AMR based on their intended functions (also known as "screening"). 10 C.F.R. § 54.4 defines the plant SSCs within the scope of the rule based on their intended functions. The "scoping" phase requires identification of all plant SSCs that are safety-related or whose failure could affect safety-related functions, or that are relied on to demonstrate compliance with the specific NRC regulations listed in 10 C.F.R. § 54.4(a)(3).

7. The scoping and screening processes are discussed in greater detail in NUREG-1800, Revision 1, "Standard Review Plan for Review of License Renewal Applications for Nuclear Power Plants" at §§ 2.1 and 2.2 (Sept. 2005) ("SRP-LR"). The SRP-LR references NEI 95-10 for detailed descriptions of the scoping and screening process. *See* NEI 95-10, "Industry Guideline for Implementing the Requirements of 10 CFR Part 54 – The License Renewal Rule," Revision 6 (June 2005) (ADAMS Accession No. ML051860406). Table 2.1-5 in the SRP-LR is used by the NRC Staff for the 10 C.F.R. § 54.21(a)(1)(i) determination for passive structures and components. This table replicates NEI 95-10, Appendix B ("Typical Structure, Component and Commodity Groupings and Active/Passive Determinations for the Integrated Plant Assessment").

8. 10 C.F.R. § 54.21(a)(1) limits the structures and components "subject to aging management review" to those structures and components that "perform an intended function . . . without moving parts or without a change in configuration or properties." These structures and components are also referred to as "passive." 10 C.F.R. § 54.21(a)(1) *excludes* from AMR those

structures and components that (1) perform an intended function with moving parts or a change in configuration or properties or (2) are replaced based on a qualified life or specified time period. Structures and components that are not replaced based on qualified life or specified time period are referred to as "long-lived" components.

9. "Screening" is performed to determine which components in the scope of license renewal are subject to AMR. Structures and components subject to AMR are subsequently reviewed to determine whether applicable aging effects require some form of aging management to meet the requirements of Part 54. Scoping and screening are discussed further below.

## III. "SCOPING" OF THE IP2 AND IP3 ELECTRICAL SSCs

10. During the license renewal scoping process, Entergy used a bounding approach for plant electrical and instrumentation and control ("I&C") systems and components by including in the scope of license renewal all plant electrical and I&C systems (as well as electrical and I&C components in mechanical systems). This bounding method eliminates the need for unique identification of every electrical and I&C component and its specific location, and assures that components are not improperly excluded from the scope of license renewal.

11. By using this approach, Entergy included in the scope of license renewal all plant electrical equipment, including *all* plant transformers (and, thus, all transformers that perform a function necessary to demonstrate compliance with the NRC regulations identified in 10 C.F.R. § 54.4(a)(3), including 10 C.F.R. §§ 50.48 and 50.63). LRA Tables 2.2-1b-IP2 and 2.2-1b-IP3 list the electrical and I&C systems within the scope of license renewal for IP2 and IP3, respectively. *See* Exh. 2, LRA at 2.5-1.

12. In addition to plant electrical systems, Entergy included in the scope of license renewal certain switchyard components that restore offsite power following a station blackout ("SBO") event. As defined in 10 C.F.R. § 50.2, an SBO is "the complete loss of alternating

current (ac) electric power to the essential and nonessential switchgear buses in a nuclear power plant (*i.e.*, loss of offsite electric power system concurrent with turbine trip and unavailability of the onsite emergency ac power system)." The offsite power sources that support SBO recovery actions are those that supply the IP2 and IP3 station auxiliary transformers and gas turbine autotransformers. The offsite power recovery path thus includes these transformers, the switchyard circuit breakers supplying the transformers, the circuit breaker-to-transformer and transformer-to-onsite electrical distribution interconnections, and associated control circuits and structures. *See* Exh. 2, LRA at 2.5-2; LRA Figures 2.5-2 and 2.5-3 (IPEC Offsite Power Recovery Diagrams for IP2 and IP3, respectively).

13. Entergy's scoping for SBO recovery is consistent with NRC regulations and guidance, in which the Staff has indicated that the plant system portion of the offsite power system should be included within the scope of license renewal. *See* Letter from David B. Matthews, Director, Division of Regulatory Improvement Programs, NRC, to Alan Nelson, Nuclear Energy Institute, "Staff Guidance on Scoping of Equipment Relied on to Meet the Requirements of the Station Blackout (SBO) Rule (10 CFR 50.63) for License Renewal (10 CFR 54.4(a)(3))" (Apr. 1, 2002) (ADAMS Accession No. ML020920464); SRP-LR at 2.1-9, 2.5-2 to 2.5-3. By including in scope for license renewal the SBO recovery paths from the offsite power system or grid connection to the plant systems, Entergy included in scope the "switchyard transformers" alluded to in NYS-8.

## IV. "SCREENING" OF THE IP2 AND IP3 ELECTRICAL STRUCTURES AND COMPONENTS

14. In accordance with 10 C.F.R. § 54.21(a)(1), Entergy conducted a screening process to determine which in-scope electrical structures and components are subject to AMR. NEI 95-10 provides NRC-endorsed guidance on screening structures and components to identify

the passive and long-lived structures and components that support an intended function. Regulatory Guide 1.188, "Standard Format and Content for Applications to Renew Nuclear Power Plant Operating Nuclear Power Plant Operating Licenses," Revision 1 (Sept. 2005) (ADAMS Accession No. ML051920430), states that NEI 95-10 "provides methods that the NRC staff considers acceptable for complying with the requirements of 10 CFR Part 54 for preparing a license renewal application."

15. As part of screening, Entergy grouped the total population of in-scope electrical components into component types, and compared these component types to those in NEI 95-10, Appendix B to identify passive component types. The passive component types were identified as commodity groups, which include similar electrical and I&C components with common characteristics. Exh. 2, LRA at 2.5-2. Entergy then identified component-level intended functions of the commodity groups. *Id.* As Entergy examined these intended functions, certain commodity groups were eliminated from further review based on the criteria in 10 C.F.R. § 54.21(a)(1)(i) and the implementing guidance in NEI 95-10, Appendix B.

16. Entergy identified two passive electrical and I&C commodity groups as meeting the Section 54.21(a)(1)(i) criterion; *i.e.*, components that perform an intended function *without* moving parts or without a change in configuration. Those commodity groups are (1) high voltage insulators and (2) cables and connections, bus, electrical portions of electrical and I&C penetration assemblies, fuse holders outside of cabinets of active electrical systems and components. Exh. 2, LRA at 2.5-2. For ease of discussion and comparison to NUREG-1801, "Generic Aging Lessons Learned Report," Rev. 1 (Sept. 2005) (the GALL Report), these two commodity groups were further divided into the component types and commodity groups listed on page 2.5-2 of the LRA. LRA Table 2.5-1 lists the specific component types or commodity groups that are subject to AMR along with their intended functions. Exh. 2, LRA at 2.5-4.

17. In accordance with 10 C.F.R. § 54.21, Entergy determined that all other electrical and I&C commodity groups are active and, therefore, not subject to AMR. Those other active electrical and I&C commodity groups include transformers. Specifically, NEI 95-10, Appendix B indicates that transformers (*e.g.*, instrument transformers, load center transformers, small distribution transformers, large power transformers, isolation transformers, coupling capacitor, voltage transformers) are *not* part of a commodity group subject to AMR in accordance with 10 C.F.R. § 54.21(a)(1)(i). Exh. 3, NEI 95-10, Appendix B at B-14. Table 2.1-5 of the SRP-LR also indicates that transformers are not passive structures or components subject to AMR under Section 54.21(a)(1)(i). SRP-LR at 2.1-23 (Table 2.1-5, Item 104).

18. The NRC Staff published its Final SER for the IP2/IP3 LRA on August 12, 2009. Safety Evaluation Report Related to the License Renewal of Indian Point Nuclear Generating Unit Nos. 2 and 3, Docket Nos. 50-247 and 50-286, Entergy Nuclear Operations, Inc. (Aug. 12, 2009). The Final SER concludes that Entergy "has adequately identified the electrical and I&C component commodity groups components within the scope of license renewal, as required by 10 CFR 54.4(a), and those subject to an AMR, as required by 10 CFR 54.21(a)(1)." *Id.* at 2-225. The NRC Staff, therefore, approved Entergy's determination that transformers are not subject to AMR and do not require an AMP under Part 54.

## V. ONGOING SURVEILLANCE AND PREVENTIVE MAINTENANCE OF ELECTRICAL TRANSFORMERS

19. As explained above, transformers are not subject to AMR and, therefore, no AMP is required under 10 C.F.R. Part 54. Nonetheless, degradation of the ability of a transformer to perform its intended function is monitorable by changes in the electrical performance of the transformer and/or its associated circuits. Moreover, certain IP2 and IP3 transformers, including those necessary for compliance with 10 C.F.R. § 50.48 and 50.63, are subject to direct, ongoing

surveillance, monitoring, maintenance, and inspection. These CLB programs and activities would continue during the period of extended operation, in accordance with 10 C.F.R. § 54.33(d). They are intended to ensure that any degradation or failure of the transformers, as active components, is detected and corrected, and that the transformers continue to perform their intended functions.

20. For certain transformers, particularly large power transformers, instrumentation is provided to detect degrading conditions. For example, if voltage conditions exceed defined acceptable ranges, then an alarm condition will be sounded automatically to alert operators to the condition (*e.g.*, excessive load on transformer, transformer fault, undervoltage conditions, etc.). These indicators or alarms appear on supervisory panels in the IP2 and IP3 control rooms or on individual transformer panels that are checked during frequent operator rounds. Established station procedures require appropriate corrective actions when monitored transformer performance does not meet acceptable ranges. Such procedures are included in activities such as personnel training and quality assurance audits, and subject to periodic NRC inspection.

21. In addition, Entergy has implemented preventive maintenance, inspection, and surveillance programs and procedures to manage "active" systems and components, including transformers required for compliance with 10 C.F.R. § 50.48 and 50.63. These programs and procedures, some of which are necessary to comply with the NRC's Maintenance Rule (10 C.F.R. § 50.65), are intended to identify and correct potential degradation (including aging) issues associated with active systems and components. These activities include, as appropriate, periodic cleaning and inspections of transformers, as well as instrument checks, functional tests, and calibration functional tests. The data and information from such tests and performance monitoring programs are analyzed and trended to detect potential degradation of transformer

performance (*e.g.*, a change in the electrical performance of the transformer or the associated circuits).

In accordance with 28 U.S.C. § 1746, I declare under penalty of perjury that the foregoing is true and correct.

Executed on August 12, 2009.

Roger B. Rucker

Name: Roger B. Rucker

Current Position: Engineering Consultant, Rucker Nuclear Consultants, Inc.

---

**Education:**

B.S. Electrical Engineering, University of Arkansas 1990

---

**Professional Certificates / Associations:**

Arkansas Professional Engineer, Certificate Number 11649

Arkansas Master Electrician, License Number M-7007

IEEE Member (20 years); Electromagnetic Compatibility Society, and Standards Association

---

**Employment History:**

June 2005 to Present – Rucker Nuclear Consultants, Inc. Engineering consulting in electrical and instrumentation and control applications. Primarily consulting with nuclear power plants for license renewal activities.

September 2006 to Present – Consultant to Entergy Services, Inc., License Renewal Services. Responsible for preparation and review of Electrical, Instrumentation and Control (EIC) Aging Management Reviews, EIC Aging Management Program Report, and EQ TLAA Reports for the Indian Point and Cooper License Renewal Projects. Responsible for the support and review of the EIC portions of the Scoping Report, the OE Report, and the LRA for Indian Point and Cooper. Responsible for Electrical Lead activities including Implementation Activities for Entergy License Renewal Projects (Pilgrim, Vermont Yankee, Fitzpatrick, Indian Point, Palisades, and Cooper). Develop and review RAI and audit question responses, support LRA contentions and ASLB hearings, support NRC audits and inspections, provide audit training for site program and system engineers, and attend NRC and Industry meetings as assigned.

March 2009 to April 2009 – Consultant to Iepson Consulting Enterprises, Inc. for training development and presentation to Korea Plant Service for license renewal and aging management of electrical components.

September 2008 to December 2008 – Consultant to Entergy Operations, Inc., Design Engineering. Prepared and reviewed instrument loop uncertainty calculations associated with the replacement of the data acquisition hardware for the Safety Parameter Display System (SPDS) computer.

July 2008 to October 2008 – Consultant to Entergy Operations, Inc., Design Engineering. Developed the modification package for the replacement of the Unit 1 Startup Boiler Control System. The project included providing details for design development including purchase of material, control system software integration, field installation, and testing.

December 2007 to May 2008 – Consultant through EXCEL Services, Inc. for Beaver Valley License Renewal Support. Provided support for the NRC Review of the Beaver Valley LRA including NRC Audits and RAIs.

June 2005 to September 2007 – Consultant through EXCEL, Services, Inc. for the Beaver Valley License Renewal Project. Beaver Valley LR Project Manager for the License Renewal recovery project. Responsible for overall performance of the project from the conceptual, developmental, through the LRA Development phases. Acted as the primary point of contact for problem resolution and as the "lead" of the Project Team. Ensured the project safely achieved the project deliverables within the approved scope, cost, and schedule. Ensured proper review and approval of project management documents for clarity and completeness. Examples include contracts, requisitions, task authorizations, and other similar project guidance documents as needed. Ensured proper review and approval of the LRA and LRA supporting documents for clarity and completeness. Reviewed and approved project and contract budgets for adequacy, completeness, and other requirements and assuring that required budgets exist and project budget revisions are initiated if required. Responsible for selecting and assigning project personnel, and ensuring project personnel are trained and qualified.

October 2005 to February 2007 - Rucker Nuclear Consultants, Inc., EPRI: License Renewal Electrical Handbook Revision. Created draft revision for EPRI 1003057, and coordinated review with the NEI License Renewal Electrical Working Group (LREWG). Submitted Final Draft to EPRI, and supported EPRI review of final draft. EPRI 1013475 (EPRI 1003057 Rev. 1) issued February 2007.

August 2005 to May 2008 – Consultant to EXCEL, Services, Inc. Participated in various activities including developing proposals for projects including license renewal, reviewing miscellaneous documents, and developing white papers for various clients.

July 2002 to June 2005 – Entergy Services, Inc., License Renewal Electrical Lead. Responsible for preparation and review of Electrical, Instrumentation and Control Aging Management Reviews and EQ TLAA Reports for the ANO2, DC Cook, Pilgrim, Vermont Yankee, and Fitzpatrick License Renewal Projects. Responsible for preparation and review of Electrical programs, and the Electrical sections for the license renewal application for the ANO2, DC Cook, Pilgrim, and Vermont Yankee projects. Responsible for the preparation and review of the electrical RAIs, and the electrical sections of the SER for the ANO2 and DC Cook projects. Review and direct work of Electrical Engineers assigned to various License Renewal projects. Responsible Lead for developing the ANO-2 and Vermont Yankee OE review reports.

January 2000 to July 2002 – Entergy Operations, Inc., Arkansas Nuclear One – Senoir Lead Startup Engineer, ANO-2 Steam Generator Replacement and Power Uprate Projects. Night-Shift Test Lead for Power Uprate Startup: provided approval for proceeding to the next planned power plateau, provided coordination between operations, reactor engineering, design engineering, and startup test group, dispositioned test deficiencies associated with the startup, and provided the morning turnover/status report to the restart team and plant management. Responsible for control systems and plant transients testing associated with Steam Generator Replacement and Power Uprate startup activities. Developed test procedures (work plans) as required to implement the required control system and plant transient testing.

September 1996 to December 1999 - Entergy Operations Inc., Arkansas Nuclear One – Senior Engineer, Minor Modifications. Developed, Implemented, and Tested Design Changes for various Unit 1 and 2 systems. Provided support for various modifications as the Post-Modification Test Engineer.

January 1991 to September 1996 - Entergy Operations Inc., Arkansas Nuclear One – Engineer I to Senior Engineer, EIC Design Engineering. Project Manager for several plant modifications. Developed Design Changes for various Unit 1 and 2 systems, including Plant Computer Replacement, CAPS Upgrade, and ANO-2 Turbine Supervisory Instrumentation. Developed Testing Work Plans for several design packages while assigned to Plant Modification and Startup for three outages.

1986 to 1990 – University of Arkansas Co-operative Education Program. Alternating semesters between an AP&L employee and a full time student while attending the University of Arkansas.

<u>Co-op Engineer, July 1988 to December 1988, Design Engineering</u>

<u>Co-op Engineer, July 1987 to December 1987, Design Engineering</u>

Electrical and I&C Engineer for Arkansas Power and Light (AP&L) for Arkansas Nuclear One in the organizations during the dates stated above. Past duties included engineering support roles for various modifications.

<u>Co-op Engineer, January 1986 to July 1986, Plant Engineering</u>

Plant Engineer for Arkansas Power and Light (AP&L) for Independence Steam Electric Station (ISES) in the organization during the dates stated above. Past duties included engineering support roles for various modifications.

UNITED STATES OF AMERICA
NUCLEAR REGULATORY COMMISSION

BEFORE THE ATOMIC SAFETY AND LICENSING BOARD

| | | |
|---|---|---|
| In the Matter of | ) | Docket Nos. 50-247-LR and 50-286-LR |
| ENTERGY NUCLEAR OPERATIONS, INC. | ) | ASLBP No. 07-858-03-LR-BD01 |
| (Indian Point Nuclear Generating Units 2 and 3) | ) | August 12, 2009 |

**DECLARATION OF JOHN W. CRAIG IN SUPPORT OF ENTERGY'S MOTION FOR SUMMARY DISPOSITION OF NEW YORK STATE CONTENTION 8**

John W. Craig states as follows under penalties of perjury:

## I. INTRODUCTION AND SUMMARY OF CONCLUSIONS

1. I am a Senior Nuclear Safety Consultant working for Talisman International, LLC. I have been retained by Entergy to provide expert services related to contention NYS-8 regarding the classification of electrical transformers as active components, as discussed in Entergy's license renewal application ("LRA") for Indian Point Nuclear Generating Units 2 and 3 (also referred to as "IP2" and IP3," respectively). I have prepared this declaration in support of the "Applicant's Motion for Summary Disposition of New York Contention 8 (NYS-8) Concerning Electrical Transformers."

2. My education and professional experience are summarized in the *curriculum vitae* attached to this declaration. I hold a Bachelor's Degree in Nuclear Engineering from the University of Maryland. I have over 35 years of experience in nuclear energy and nuclear safety matters, including positions with the U. S. Nuclear Regulatory Commission ("NRC") and in the U.S. Navy's nuclear power program.

3. While at the NRC, I held numerous technical and management positions. I was the Director of the License Renewal and Environmental Project Directorate responsible for managing license renewal activities in the Office of Nuclear Reactor Regulation ("NRR"). I had direct responsibility to manage NRR license renewal activities, including: (1) development and issuance of the initial license renewal rule and regulatory guidance documents for license renewal; (2) review of technical license renewal reports submitted by industry groups; and (3) NRR interactions with the first nuclear plants seeking renewal of their operating licenses. Subsequently, as Associate Director for Inspection and Programs, NRR, I was responsible for management of NRC inspection and oversight activities for all civilian nuclear power reactors and non-power reactors in the U.S., including NRR's license renewal program; next-generation reactor designs and facilities; assessment of environmental issues; standard technical specifications, emergency planning, technical evaluations and assessment of operating reactor events, nuclear plant operator licensing, and licensee quality assurance programs.

4. I have reviewed the Atomic Safety and Licensing Board's ("Board") decision on contention admissibility (LBP-08-13) dated July 31, 2008, in which the Board admitted Contention NYS-8. In admitting NYS-8, the Board stated that electrical transformers "nominally perform their intended function without moving parts and without a change in configuration or properties," ostensibly making them subject to the aging management review ("AMR") requirements of 10 C.F.R. § 54.21(a)(1). Noting an apparent lack of a "legally binding justification" to exclude transformers from AMR, the Board directed the parties to explain how a transformer changes its configuration or properties in performing its intended function (such that it could be excluded from AMR). Specifically, the Board asked the parties to address "whether transformers are more similar to the included, or to the excluded, component examples" listed in Section 54.21(a)(1)(i). *See* LBP-08-13, 68 NRC 43, 88-89.

5. Accordingly, my declaration addresses: (1) the regulatory treatment of electrical transformers in an LRA in accordance with the requirements of 10 C.F.R. Part 54; (2) the change of properties that takes place in transformers as they perform their intended function; (3) the similarities between transformers and components that have been explicitly excluded from AMR in 10 C.F.R. § 54.21(a)(1)(i); and (4) the Staff's consistent treatment of transformers as active components in license renewal guidance documents and prior LRA reviews.

6. In forming my opinion, I have reviewed documentation including, *inter alia*, pertinent portions of Entergy's LRA, the License Renewal Rule (10 C.F.R. Part 54) and its regulatory history, and applicable NRC and industry guidance documents. I also have reviewed the expert declarations of Dr. Steven Dobbs and Mr. Roger Rucker, as submitted by Entergy in support of its motion for summary disposition of NYS-8.

7. Based upon my professional experience and judgment, I have reached the following conclusions:

(a) Electrical transformers are within the scope of the license renewal rule, as defined in 10 C.F.R. § 54.4. Under 10 C.F.R. § 54.21(a)(1)(i), however, transformers are properly excluded from AMR because they cannot perform their intended functions without undergoing continuous changes in their electrical and magnetic properties, *i.e.*, a change in state. A transformer's ability to perform its intended function is readily monitorable. Transformers, therefore, do not meet the definition of a "passive" component, as set forth in the Statement of Consideration ("SOC") for the Commission's 1995 License Renewal Rule.

(b) Electrical transformers are similar to the component examples listed in 10 C.F.R. § 54.21(a)(1)(i) that are excluded from the AMR requirements of Part 54. As discussed in this declaration, electrical transformers are significantly different from the examples of components discussed in Part 54 that require AMR.

(c) The SOC for the 1995 License Renewal Rule discusses the Commission's stated intent to rely on existing licensee maintenance activities and Maintenance Rule (10 C.F.R. § 50.65) requirements as a basis for concluding that the effects of aging will be effectively managed during the license renewal term for active components.

(d) Both NRC and industry license renewal guidance documents properly conclude that electrical transformers are not subject to AMR under Part 54 because effects of aging will be effectively managed during the license renewal term through existing licensee maintenance activities. These guidance documents also discuss the long-standing NRC Staff position that electrical transformers are "active" components and, therefore, are excluded from the AMR requirements in 10 C.F.R. § 54.21.

(e) Accordingly, Entergy's conclusion that electrical transformers are active components and, therefore, not subject to AMR, is fully consistent with the requirements of 10 C.F.R. § 54.21 and long-standing NRC regulatory practice and guidance.

## II. REGULATORY HISTORY OF 10 C.F.R. PART 54 — THE CRITICAL DISTINCTION BETWEEN "ACTIVE" AND "PASSIVE" STRUCTURES AND COMPONENTS

8. The NRC published the final, revised License Renewal Rule, including the associated SOC, in the *Federal Register* on May 8, 1995. 60 Fed. Reg. 22,461 (May 8, 1995) (Exhibit 1). The process established in 10 C.F.R. Part 54 is intended to demonstrate that the effects of aging would be adequately managed for the period of extended operation. The Commission observed that "[b]ecause the detrimental effects of aging are manifested in degraded performance or condition, an appropriate license renewal review would ensure that licensee programs adequately monitor performance or condition in a manner that allows for the timely identification and correction of degraded conditions" *Id.* at 22,469. It concluded that AMR is not required for structures and components performing "active" functions:

> Therefore, the Commission believes that with the additional experience it has gained with age-related degradation reviews and with the implementation of the maintenance rule, there is a sufficient basis for concluding that current licensee programs and activities, along with the regulatory process, will be adequate to manage the effects of aging on the *active* functions of all systems, structures, and components [SSCs] within the scope of the license renewal during the period of extended operations.

*Id.* at 22,471 (emphasis added).

9. By contrast, the Commission "determined that *passive* structures and components for which aging degradation is not readily monitored"—that is, components that perform an intended function "without moving parts or without a change in configuration or properties"—are subject to an AMR, as required by 10 C.F.R. § 54.21(a)(1). Exh. 1, 60 Fed. Reg. at 22,477 (emphasis added).

10. During the review and comment phases of the rulemaking process, the NRC considered several different concepts of "passive" structures and components. The NRC found that prior industry concepts "do not accurately describe the structures and components that should be subject to an [AMR] for license renewal." Exh. 1, 60 Fed. Reg. at 22,477. Hence, the Commission developed a new description of "passive" characteristics of structures and components. *Id.* The SOC clarified that the determination whether particular structures and components are subject to an AMR for license renewal should be based on consideration of defined characteristics as opposed to a dictionary definition or plain English usage of the term of "passive." The License Renewal Rule does not use the term "passive," but the Commission used the term in the SOC to facilitate the discussion of relevant characteristics. *Id.* ("This SOC uses the term 'passive' for convenience.")

11. One factor that distinguishes "active" structures and components from their "passive" counterparts is the ability to readily monitor performance of their intended functions. As the 1995 SOC explains, "structures and components that perform active functions can be generically excluded from an aging management review on the basis of performance or condition-monitoring programs. The Commission recognizes that structures and components that have passive functions generally do not have performance and condition characteristics that are as readily monitorable as those that perform active functions." Exh. 1, 60 Fed. Reg. 22,477.

12. Passive functions, such as pressure boundary and structural integrity, are generally verified indirectly, by confirmation of physical dimensions or component physical condition. The Commission determined that passive structures and components for which aging degradation is not readily monitored are those that perform an intended function without moving parts or without a change in configuration, properties or state.

13. Significantly, however, the Commission emphasized that structures and components that perform their intended function without moving parts, but which nonetheless experience a change in configuration, properties or state, are excluded from the AMR requirements of Section 54.21(a)(1)(i). These are described as active structures and components in the SOC. Exh. 1, 60 Fed. Reg. at 22,477-78.

14. The Commission noted that defining active structures and components as only those with "moving parts" would result in certain structures and components, such as batteries (which change their electrolytic properties when discharging), or transistors and power supplies (which do not have moving parts but change electrical properties) being defined as passive components. Exh. 1, 60 Fed. Reg. at 22,477. The Commission thus made clear that "'a change in configuration or properties' should be interpreted to include 'a change in state.'" *Id.* Thus, the SOC makes clear that structures and components with no moving parts, but which experience changes in configuration or properties in performing their intended function, are excluded from the AMR requirements of 10 C.F.R. §54.21(a)(1)(i).

15. The examples of structures and components provided in 10 C.F.R. § 54.21 and discussed in the SOC that are *subject to AMR* include, but are not limited to, the reactor vessel, the reactor coolant system pressure boundary, steam generators, valve bodies, pump casings, and the containment. The intended functions performed by these structures and components are static. That is, their intended functions are to maintain physical configuration and properties.

Aging degradation is not readily monitored for these components on an ongoing basis. Additionally, these passive structures and components perform their intended functions without the application of an external force or input, and without a change of configuration, properties, or state.

16. The examples listed in 10 C.F.R. § 54.21 that are *excluded from AMR* include, but are not limited to, pumps, valves, motors, diesel generators, air compressors, pressure indicators, pressure transmitters, relays, batteries, and power supplies. The intended functions performed by these structures and components are dynamic. That is, the functions require changes in the configuration, properties or state of the structures and components. Moreover, these changes can be readily monitored. For example, the output fluid pressure of a pump, the output voltage and frequency of a diesel generator, the air pressure of a compressor, the output signal of a pressure indicator, the output voltage of a battery, the electrical output of a power supply, the position of a valve, and the status or condition of a relay all can be readily monitored.

17. During the public comment period for the 1995 License Renewal Rule, a commenter suggested that the regulatory test include a more comprehensive list of components subject to AMR. The Commission opted not to include a more detailed list because the components subject to AMR can be "highly plant specific." Exh. 1, 60 Fed. Reg. at 22,479. Nevertheless, the Commission promised to "include additional clarification and examples of components requiring an aging management review in its implementation guidance for the rule." *Id.* The Standard Review Plan for License Renewal ("SRP-LR"), NUREG-1800, Revision 1 and Regulatory Guide ("RG") 1.188 provide this guidance to the NRC Staff and industry.

18. In revising Part 54 in 1995, the Commission underscored its intent to "fully integrate the maintenance rule and the license renewal rule." Exh. 1, 60 Fed. Reg. at 22,471. The Maintenance Rule, 10 C.F.R. § 50.65, was issued in July 1991 and became effective in July

of 1996. *See* Final Rule, Monitoring the Effectiveness of Maintenance at Nuclear Power Plants, 56 Fed. Reg. 31,306 (July 10, 1991), as amended at 58 Fed. Reg. 33,996 (June 23, 1993). The main purpose of the Maintenance Rule is to require monitoring of the overall continuing effectiveness of licensee maintenance programs to ensure that (1) safety-related and certain nonsafety-related SSCs are capable of performing their intended functions; (2) for nonsafety-related equipment, failures will not occur that prevent the fulfillment of safety-related functions; and (3) failures resulting in scrams and unnecessary actuations of safety-related systems are minimized. 10 C.F.R. § 50.65(b)(1)-(2).

19. Noting that "the intent of the license renewal rule and the maintenance rule is similar (ensuring that the detrimental effects of aging on the functionality of important [SSCs] are effectively managed)," the Commission "determined that the license renewal rule should credit existing maintenance activities and maintenance rule requirements for most structures and components." Exh. 1, 60 Fed. Reg. at 22,471. The Commission also found that there was "sufficient basis for concluding that current licensee programs and activities, along with the regulatory process, will be adequate to manage the effects of aging on the active functions of all [SSCs] within the scope of license renewal during the period of extended operation so that the CLB will be maintained." *Id.* Therefore, "structures and components that perform active functions can be generically *excluded* from an [AMR] on the basis of performance or condition monitoring programs." *Id.* at 22,477 (emphasis added). On the other hand, "structures and components within the scope of the license renewal rule that perform passive intended functions" are subject to AMR under Part 54. *Id.*

## III. THE ACTIVE AND READILY-MONITORABLE FUNCTIONS OF TRANSFORMERS

20. NYS-8 incorrectly assumes that transformers are passive components. The contention, however, contains no discussion of the intended function of an electrical transformer, or the manner in which a transformer performs its intended function. In fact, NYS-8 does not appear to recognize or understand the fundamental distinction between "active" and "passive" functions. As discussed below, transformers perform an active function and, therefore, are not subject to AMR requirements.

21. The Declaration of Dr. Steven E. Dobbs provides a detailed discussion of the operation and properties of electrical transformers. I do not repeat that discussion here. In short, transformers are comprised of two coils, a primary and a secondary coil. When energized by an alternating voltage and current flowing in the primary coil, an alternating magnetic flux is created in the transformer that in turn "couples" with the secondary coil, inducing an alternating voltage in the secondary coil. If an electrical load such as a motor is connected to the secondary side completing the circuit, then an alternating current will be created supplying voltage and current to the load such as an electrical bus. Performance of this function requires a *continuous change of electric and magnetic properties* within the transformer.

22. Transformers perform the active function of supplying voltage and current to electrical busses. For example at IP 2 and IP3, when 6.9 kV 60 cycle AC voltage is applied to the primary coil of the station service transformer, a 480 volt AC at 60 cycle voltage is created on the secondary coil, so secondary or output current is higher than the primary or input current. *See* Exh. 2, LRA Figures 2.5-2 and 2.5-3. The voltage in the secondary coil is the result of continuous change of the magnetic properties or magnetic field in the transformer while the transformer is in service. Thus, while transformers do not have moving parts, each of these

components of the transformer undergoes changes in electric properties or state when energized, much like the components in a transistor, inverter, or power supply. When connected to an electrical load or circuit, each of these components must change properties in order to perform its intended function.

23. In short, in the absence of these changing electrical and magnetic properties, a transformer cannot function. These changing electrical and magnetic properties are continuous as long as the transformer is performing its intended function of supplying voltage and current to electrical busses. This constant, active change of properties causes the transfer of energy from the primary to the secondary coil of a transformer. Therefore, consistent with the SOC, electrical transformers are not subject to an aging management review under 10 C.F.R. § 54.21(a)(1)(i).

24. As discussed in the declaration of Roger Rucker, periodic inspection, surveillance, monitoring, and preventive maintenance of transformers—all performed as part of the current licensing bases for IP2 and IP3—helps to ensure transformer reliability.

## IV. THE NRC'S LONG-STANDING AND CONSISTENT TREATMENT OF ELECTRICAL TRANSFORMERS AS ACTIVE COMPONENTS THAT ARE EXCLUDED FROM AMR UNDER 10 C.F.R. PART 54

25. When the Nuclear Energy Institute ("NEI") developed NEI 95-10, "Industry Guideline for Implementing the Requirements of 10 C.F.R. Part 54 – the License Renewal Rule," it submitted that document to the NRC for review and endorsement. In a September 19, 1997, letter signed by the Director of the License Renewal Project Directorate, the NRC Staff, discussed its view on the AMR requirements for certain electrical components. *See* Exh. 4. In pertinent part, the NRC staff recommended revising Appendix B of NEI 95-10 to indicate that "transformers . . . do *not* require an aging management review." Exh. 4, Att. at 4.

26. The NRC Staff explained the technical and regulatory basis for excluding transformers from AMR under 10 C.F.R. Part 54 as follows:

> Transformers perform their intended function through a change in state by stepping down voltage from a higher to a lower value, stepping up voltage to a higher value, or providing isolation to a load. *Transformers perform their intended function through a change in state similar to switchgear, power supplies, battery chargers, and power inverters, which have been excluded in §54.21(a)(1)(i) from an aging management review. Any degradation of the transformer's ability to perform its intended function is readily monitorable by a change in the electrical performance of the transformer and the associated circuits.* Trending electrical parameters measured during transformer surveillance and maintenance such as Doble test results, and advanced monitoring methods such as infrared thermography, and electrical circuit characterization and diagnosis provide a direct indication of the performance of the transformer. *Therefore, transformers are not subject to an aging management review.*

Exh. 4, Att. at 2 (emphasis added). The NRC Staff based this conclusion on "the considerable discussion provided in the [1995] rule and SOC," and compared transformers "with the examples explicitly provided in the rule in terms of *how the performance of their intended functions would be achieved* and whether aging degradation of these components would be readily monitored using currently available techniques, in a similar way by which the examples in the rule (circuit breakers, relays, switches, etc.) would be monitored." *Id.* (emphasis added).

27. Based on the NRC Staff's explicit recommendation, NEI revised Appendix B to NEI 95-10 to incorporate the conclusion that transformers are excluded from AMR because they are not passive, long-lived structures or components. The Staff endorsed Revision 3 of NEI 95-10 in RG 1.188, "Standard Format and Content for Applications to Renew Nuclear Power Plant Operating Nuclear Power Plant Operating Licenses" (July 2001).

28. On April 10, 1998, the very first license renewal application filed under Part 54 (for Calvert Cliffs Units 1 and 2) was submitted to the NRC. This application discussed the first integrated plant assessment that concluded that (i) electrical transformers were in the scope as defined in 10 C.F.R. § 54.4, but that (ii) electrical transformers are not subject to AMR

requirements of 10 C.F.R. § 54.21(a)(1). The NRC issued the renewed operating licenses for Calvert Cliffs Units 1 and 2 on March 23, 2000. Every subsequent license renewal application approved by the NRC reflects the same conclusion.

29. During various presentations to the Advisory Committee on Reactor Safeguards ("ACRS") Subcommittee on License Renewal, the classification of certain electrical equipment (including transformers) as "active components" has been discussed. For example during a meeting held October 19, 2000, to discuss drafts of the SRP-LR, the generic aging lessons learned ("GALL") report, the draft regulatory guide DG-1104 (which was published as NUREG-1800), and NEI-95-10, the Subcommittee and NRC Staff discussed the classification of electrical transformers as active components. As a member of the NRC technical staff (Mr. Mitra) explained to the ACRS:

> MR. MITRA: If you don't have anymore questions on comments, then we'll go to the license renewal issues. Number 8 is a component list and the staff identifies the component list by plant-specific diagram, as Chris was saying, P&ID diagram, that is. The commodity groups are allowed and guidance on how to evaluate commodity groups is contained in a revised SRP and it's in Section 2.1 and through 2.3 through 2.5. And next, 11 through 20, its passive-active determinations, fuses, active-passive transformers, indicating lights, heat tracing, electrical heaters. The determination of passive-active was made on NEI document 95-10 and later on included in SRP table 2.1.6. The electrical components identified above [including transformers] are determined to be active components, and thus not subject to an aging management review.

Transcript of October 19, 2000 Public Meeting Held by the ACRS, Subcommittee on Plant License Renewal, at 48 (ADAMS Accession No. ML003765808).

30. Significantly, in SECY-01-0157, dated August 17, 2001, the Staff conveyed this position to the Commission. In a Staff requirements memorandum ("SRM") dated August 28, 1999, in response to SECY-99-148, "Credit for Existing Programs for License Renewal," the

Commission had directed the Staff to "prepare a detailed analysis and provide recommendations to the Commission on whether it would be appropriate to resolve generic technical issues, including any credit for existing programs, by rulemaking." The Staff's response to the Commission's directive is set forth in SECY-01-0157, Rulemaking Issue, License Renewal Rulemaking (Aug. 17, 2001) (ADAMS Accession No. ML011990176).

31. The Staff considered stakeholder comments and experience gained in its initial license renewal application reviews. Among other things, the Staff discussed a letter submitted by the Union of Concerned Scientists ("UCS") on June 26, 2001. UCS had cited eight unplanned reactor shutdowns since January 1, 2000, due to equipment failures caused by aging, and suggested that those failures indicated that the aging management programs might not be effective. The Staff found that only one case of the cited shutdowns was caused by the failure of a passive component (a steam generator tube failure). The Staff found that "[t]he other shutdowns were attributed to the failure of *active components, such as transformers*, solenoid valves, and circuit breakers," and that "these active components are not subject to the license renewal requirements." *See* SECY-01-0157 at 3 (emphasis added).

32. Significantly, in another SRM issued on September 5, 2001, the Commission concurred with the Staff recommendation that no additional changes to Part 54 be pursued at that time. As such, the Commission raised no objection to the Staff's conclusion that transformers are "active components" that are not subject to AMR under Part 54. *See* Staff Requirements Memorandum, SECY-01-0157, License Renewal Rulemaking (Sept. 5, 2001) (ADAMS Accession No. ML012480330).

33. The view that transformers are active components exempt from the AMR requirements is further reflected in industry and NRC guidance documents. The latest revision of NEI 95-10 is Revision 6, issued in June 2005. The latest revision of RG 1.188 is Revision 1,

issued in September 2005 (ADAMS Accession No. ML051920430). RG 1.188 endorses Revision 6 of NEI 95-10 and, like its precursor, states that NEI 95-10 "provides methods that the NRC staff considers acceptable for complying with the requirements of 10 CFR Part 54 for preparing a license renewal application." RG 1.188, Rev. 1, at 7. In September 2005, the NRC also issued Revision 1 to NUREG-1800, the SRP-LR. Table 2.1-5 of the SRP-LR lists typical structures and components, and indicates whether they are active or passive; *i.e.*, perform their intended functions with or without moving parts or a change in configuration or properties. Table 2.1-5 indicates that transformers are *not* passive structures and components subject to AMR under 10 C.F.R. § 54.21(a)(1)(i). SRP-LR at 2.1-23 (Table 2.1-5, Item 104).

34. The development of RG 1.188 and the SRP-LR included extensive review, comment, and discussion involving members of the public, the ACRS, and submittal to the Commission prior to issuance. The conclusion that electrical transformers are active components—not subject to the AMR under 10 C.F.R. § 54.21(a)(1)—is a long-standing NRC Staff position, reflected in every LRA submitted to, and approved by, the NRC to date.

## V. CONCLUSIONS

35. In order to perform their intended function, transformers must be energized from another electrical source that causes a change in electrical/magnetic properties—that is, a "change in state." The performance of electrical transformers is readily monitorable.

36. Furthermore, existing plant procedures and programs define routine maintenance, corrective action, and surveillance activities for certain IP2 and IP3 transformers.

37. The conclusion that electrical transformers are not subject to the AMR requirements of 10 C.F.R. § 54.21(a)(1) is an NRC Staff position formally documented as early as 1997. This position is reflected in both NRC and industry guidance documents and the NRC's

review and approval of numerous license renewal applications, and previously conveyed to the ACRS and Commission.

38. Entergy's determination no IP2 and IP3 electrical transformers are subject to AMR is fully consistent with the requirements of 10 C.F.R. § 54.21. This determination also comports with the Commission's clear and express intent to credit existing licensee programs that provide adequate aging management for most structures and components.

In accordance with 28 U.S.C. § 1746, I declare under penalty of perjury that the foregoing is true and correct.

Executed on August 12, 2009.

John W. Craig

**John W. Craig**

3912 Springarden St.
Olney, MD 20832
301-570-1650

**Summary**

John Craig is a Senior Nuclear Safety Consultant to Talisman, with over 35 years of nuclear safety experience, most recently in the areas of management systems, quality assurance, license renewal, emergency preparedness, and safety conscious work environment. Mr. Craig began his career with the U.S. Nuclear Regulatory Commission (NRC) in 1976. He retired from the NRC in 2005, after 33 years of Federal service. Mr. Craig began his NRC career in the Office of Inspection and Enforcement (I&E) as a reactor inspector. Later, as Associate Director for Inspection and Programs in the Office of Nuclear Reactor Regulation (NRR), his responsibilities included management of inspection and oversight activities for all civilian nuclear power reactors and non-power reactors in the U.S., review of next-generation reactor designs and facilities, license renewal reviews, assessment of environmental issues, standard technical specifications, emergency planning, technical evaluations and assessment of operating reactor events, nuclear plant operator licensing, and licensee quality assurance programs. As Director of the License Renewal and Environmental Project Directorate, he was responsible for managing license renewal activities in the Office of Nuclear Reactor Regulation (NRR). He had direct responsibility to manage NRR license renewal activities including: [1] development and issuance of the initial license renewal rule, Standard Review Plan and Regulatory Guide for License Renewal, and related documents for license renewal; [2] review of technical license renewal reports submitted by industry groups; and [3] NRR interactions with license renewal lead nuclear plants.

As the Deputy Director, Office of Nuclear Regulatory Research (RES), his responsibilities included management of research activities associated with nuclear power facilities, activities associated with consensus and voluntary standards for agency use, and recommending regulatory actions to resolve ongoing and potential safety issues for nuclear power plants and other facilities regulated by the NRC, including those issues designated as Generic Safety Issues (GSIs). He directed the NRC's initiative for cooperative research with the U.S. Department of Energy (DOE), various federal agencies, U.S. nuclear industry participants, universities, and international participants.

As a Senior Executive, he also served as the Assistant for Operations for the Executive Director for Operations, and as the Chief of Staff for the Chairman of the NRC. His assignments as a Senior Executive in NRR included Chief, Plant Systems Branch, where he managed technical reviews associated with secondary and balance of plant systems, fire protection and environmental qualification of electrical and mechanical equipment. He also served as Director Projects Directorate 3-2 where he managed licensing activities for commercial nuclear power plants. As a Senior Executive in RES, he served as Director of the Division of Engineering and Division of Regulatory Applications, where he directed research activities in the areas of materials; electrical, structural, and mechanical engineering; instrumentation and control; and earth sciences.

## Education

B.S., Nuclear Engineering, University of Maryland

## Qualifications

**Management -** Over 20 years of management experience with NRC. As the Assistant for Operations for the NRC's Executive Director for Operations, served as the Secretary for the NRC Executive Council; managed interface and coordination with the NRC Commission, the General Accounting Office and the NRC's Inspector General; and coordinated international activities as a member of the NRC International Council. As a Senior Executive in NRR, was responsible for inspection and licensing programs with a staff of approximately 650 people and a budget of approximately $10 million. As a Senior Executive in RES, was responsible for research programs with a staff of approximately 200 people with budgets of approximately $50 million.

**Nuclear Reactor Safety Management -** Managed the development and implementation of nuclear reactor regulatory programs, including licensing, inspection, license renewal, technical and engineering reviews, research programs, and consensus codes and standards activities. Also served as the NRC's Standards Executive, and was Chairman of the NRC's Committee to Review Generic Requirements (CRGR). Positions held include the following:

- Associate Director for Inspection and Programs, NRR
- Director, License Renewal and Environmental Review Directorate, NRR
- Director, Project Directorate III-2, NRR
- Chief, Plant Systems Branch, NRR
- Deputy Director, Office of Nuclear Regulatory Research
- Director, Division of Engineering, RES
- Director, Division of Regulatory Applications, RES
- Chief, Vendor Inspection Section, I&E
- Senior Reactor Inspector, I&E

**Operational Readiness Review -** Led numerous inspection teams and conducted inspections at nuclear power plants. The focus of inspections included management and organizational processes, engineering support, maintenance programs, nuclear and secondary systems, operational event assessment, and operator qualification and training. One example is being Team Leader for a Diagnostic Evaluation Team that examined plant safety and management performance at the Brunswick Nuclear Plant. Also participated in investigations of the events related to the breakdown of quality assurance at the Watts Bar Nuclear Plant, and the flow of information during the accident at Three Mile Island Unit 2. Conducted numerous inspections at nuclear power plants, vendor facilities including nuclear fuel fabricators, nuclear steam system suppliers, and architect engineer facilities. Additional responsibilities include being the NRC's Standards Executive, and the NRC representative on the ASME Nuclear Quality Assurance Main Committee.

**Security** - Managed numerous research projects focused on security issues related to U.S. commercial nuclear power plants.

**Emergency Preparedness** - Managed NRR's responsibilities in emergency preparedness, including coordination with FEMA, state, and local emergency response organizations. Served as a member of the NRC's Incident Response Executive Team and Reactor Safety Teams.

**Human Factors Safety** - Team Leader for the inspection team that examined safety conscious work environment issues at Tennessee Valley Authority facilities. Participated in commercial plant inspections of human factors issues, involving revised operating and emergency procedures and control room design.

## Employment

**Talisman International, LLC,** Senior Nuclear Safety Consultant, 2007-Present

**U.S. Nuclear Regulatory Commission,** 1976-2005

- Deputy Director, Office of Nuclear Regulatory Research
- Associate Director for Inspection and Programs, NRR
- Chief of Staff to Chairman
- Assistant for Operations for EDO
- Director, Division of Engineering, RES
- Director, Division of Regulatory Applications, RES
- Deputy Director, Division of Engineering, RES
- Director, License Renewal and Environmental Review, NRR
- Director, Project Directorate III-2, NRR
- Chief, Plant Systems Branch, NRR
- Chief, Vendor Inspection Section
- Senior Reactor Inspector
- Enforcement Specialist

**University of Maryland's Co-operative Education Program**
Alternating semesters between being an NRC employee and a full time student while attending the University of Maryland, 1976-1979

**Vitro Labs,** Staff Specialist, 1973-1976

**U.S. Navy,** Nuclear Submarine Program, 1968-1973

## LIST OF SUPPORTING EXHIBITS

| Exhibit | Description |
|---|---|
| 1 | Final Rule, Nuclear Power Plant License Renewal; Revisions, 60 Fed. Reg. 22,461 (May 8, 1995) |
| 2 | Excerpts from Chapter 2 of the Indian Point Energy Center License Renewal Application |
| 3 | Excerpt from Appendix B ("Typical Structure, Component and Commodity Groupings and Active/Passive Determinations for the Integrated Plant Assessment") to NEI 95-10, Industry Guideline for Implementing the Requirements of 10 CFR Part 54 – The License Renewal Rule, Revision 6 (June 2005) |
| 4 | Letter from Christopher Grimes, Director, License Renewal Project Directorate, NRC, to Douglas J. Walters, NEI, Determination of Aging Management Review for Electrical Components (Sept. 19, 1997) |

# EXHIBIT 1

require the approval of OMB under 44 U.S.C. 3501, et seq.

**Comments**

A general description of the statutory basis for this final rule was set forth in the interim rule published on September 16, 1994, (59 FR 47530). The interim rule provided 60 days for comments. No comments were received during the interim rule comment period of September 16 through November 15, 1994. This final rule provides that in determining net proceeds for shorn wool or mohair, effective for 1993 and subsequent marketing years, marketing charges for commissions, coring, or grading shall not be deducted. This rule provides authorized representatives of USDA and CCC access to the premises of buyers and sellers of wool and mohair in order to inspect their records for authenticity.

This provision had been accidentally omitted when the wool regulations and mohair regulations were combined in 1991. This final rule also clarifies the definition of nonmarketing charges to make it consistent with the calculation of net proceeds and net proceeds for payment purposes.

Section 1468.18(d) was inadvertently omitted from the interim rule. This provision was accidently omitted when the mohair regulations and the wool regulations were combined in 1991 (56 FR 40233, August 14, 1991). This final rule, in part, merely reinstates the omitted provision.

**List of Subjects in 7 CFR Part 1468**

Grant program-agriculture, Livestock, Mohair, Reporting and recordkeeping, Wool.

Accordingly, the interim rule amending 7 CFR part 1468 published on September 16, 1994, (59 FR 47530) is adopted as final with the following changes:

## PART 1468—WOOL AND MOHAIR

1. The authority citation for 7 CFR part 1468 continues to read as follows:

**Authority:** 7 U.S.C. 1781–1787; 15 U.S.C. 714b and 714c.

2. In § 1468.3 the definition of "Nonmarketing charges" is revised to read as follows:

**§ 1468.3 Definitions.**

* * * * *

*Nonmarketing charges* means charges paid by or for the account of the producer that are not directly related to improving the marketability of the shorn wool or mohair, such as, but not limited to, storage bags, advances, interest on advances, shearing, and association dues, and are not deducted from the producer's gross proceeds to determine net proceeds for payment purposes and are deducted from gross proceeds to determine net proceeds.

* * * * *

3. Section 1468.18 is amended by adding paragraph (d) to read as follows:

**§ 1468.18 Maintenance and inspection of records.**

* * * * *

(d) At all times during regular business hours, authorized representatives of CCC or USDA shall have access to the premises of the applicant, of the marketing agency, and of the person who furnished evidence to an applicant for use in connection with the application, in order to inspect, examine, and make copies of the books, records, and accounts, and other written data as specified in paragraphs (a), (b), and (c) of this section.

Signed at Washington, DC, on May 1, 1995.

**Bruce R. Weber,**

*Acting Executive Vice President, Commodity Credit Corporation.*

[FR Doc. 95–11180 Filed 5–5–95; 8:45 am]

BILLING CODE 3410–05–M

---

## NUCLEAR REGULATORY COMMISSION

**10 CFR Parts 2, 51, and 54**

**RIN 3150–AF05**

## Nuclear Power Plant License Renewal; Revisions

**AGENCY:** Nuclear Regulatory Commission.

**ACTION:** Final rule.

**SUMMARY:** The Nuclear Regulatory Commission (NRC) has amended its regulations to revise the requirements that an applicant must meet for obtaining the renewal of a nuclear power plant operating license. The rule also clarifies the required information that must be submitted for review so that the agency can determine whether those requirements have been met and changes the administrative requirements that a holder of a renewed license must meet. These amendments are intended to provide a more stable and predictable regulatory process for license renewal.

**EFFECTIVE DATE:** June 7, 1995.

**FOR FURTHER INFORMATION CONTACT:** Thomas G. Hiltz, Office of Nuclear Reactor Regulation, U.S. Nuclear Regulatory Commission, Washington, DC 20555, telephone: (301) 415–1105.

**SUPPLEMENTARY INFORMATION:**

I. Background.
II. Final Action.
III. Principal Issues.
a. Continued validity of certain findings in previous rulemaking.
b. Reaffirmation of the regulatory philosophy and approach and clarification of the two principles of license renewal.
c. Systems, structures, and components within the scope of license renewal.
d. The regulatory process and aging management.
e. Reaffirmation of conclusions concerning the current licensing basis and maintaining the function of systems, structures, and components.
f. Integrated plant assessment.
g. Time-limited aging analyses and exemptions.
h. Standards for issuance of a renewed license and the scope of hearings.
i. Regulatory and administrative controls.
IV. General Comments and Responses.
V. Public Responses to Specific Questions.
VI. Availability of Documents.
VII. Finding of No Significant Environmental Impact: Availability.
VIII. Paperwork Reduction Act Statement.
IX. Regulatory Analysis.
X. Regulatory Flexibility Act Certification.
XI. Non-Applicability of the Backfit Rule.

### I. Background

The previous license renewal rule (10 CFR Part 54) was adopted by the Nuclear Regulatory Commission (NRC) on December 13, 1991 (56 FR 64943). This rule established the procedures, criteria, and standards governing the renewal of nuclear power plant operating licenses.

Since publishing the previous license renewal rule, the NRC staff has conducted various activities related to implementing this rule. These activities included: developing a draft regulatory guide, developing a draft standard review plan for license renewal, interacting with lead plant licensees, and reviewing generic industry technical reports sponsored by the Nuclear Management and Resources Council (now part of the Nuclear Energy Institute (NEI)).

In November 1992, the law firm of Shaw, Pittman, Potts, and Trowbridge submitted a paper to the NRC that presented the perspective of Northern States Power Company on the license renewal process. The paper included specific recommendations for making the license renewal process more workable. In addition, industry representatives provided the Commission with views on several key license renewal implementation issues. In late 1992, the NRC staff conducted a senior management review and discussed key license renewal issues with the Commission, industry groups,

HeinOnline -- 60 Fed. Reg. 22461 1995

and individual licensees. The NRC staff presented its recommendations regarding several of these key license renewal issues in two Commission policy papers: SECY-93-049, "Implementation of 10 CFR Part 54, 'Requirements for Renewal of Operating Licenses for Nuclear Power Plants,'" and SECY-93-113, "Additional Implementation Information for 10 CFR Part 54, 'Requirements for Renewal of Operating Licenses for Nuclear Power Plants.'"

In its staff requirements memorandum (SRM) of June 28, 1993, the Commission stated that it is essential to have a predictable and stable regulatory process clearly and unequivocally defining the Commission's expectations for license renewal. This process would permit licensees to make decisions about license renewal without being influenced by a regulatory process that is perceived to be uncertain, unstable, or not clearly defined. The Commission directed the NRC staff to convene a public workshop to evaluate alternative approaches for license renewal that best take advantage of existing licensee activities and programs as a basis for concluding that aging will be addressed in an acceptable manner during the period of extended operation. In particular, the Commission directed the NRC staff to examine the extent to which greater reliance can be placed on the maintenance rule (10 CFR 50.65, "Requirements for Monitoring the Effectiveness of Maintenance at Nuclear Power Plants") as a basis for concluding that the effects of aging will be effectively managed during the license renewal term.

On September 30, 1993, the NRC staff conducted a public workshop in Bethesda, Maryland, that was attended by over 180 people. Attendees included nuclear utilities, industry organizations, public interest groups, architect and engineering firms, consultants and contractors, and Federal and State governments. In December 1993, the NRC staff forwarded SECY-93-331, "License Renewal Workshop Results and Staff Proposals for Revision to 10 CFR Part 54, 'Requirements for Renewal of Operating Licenses for Nuclear Power Plants,'" to the Commission. The NRC staff recommended that the Commission amend 10 CFR Part 54.

In its SRM of February 3, 1994, the Commission agreed with the NRC staff's conceptual approach (explained in SECY-93-331) for performing license renewal reviews and directed the staff to proceed with rulemaking to amend 10 CFR Part 54. The Commission believes that the license renewal process should focus on the management of the effects of aging on certain systems, structures, and components during the period of extended operation. An objective for the amendment is to establish a more stable and predictable license renewal process. The amendment will identify certain systems, structures, and components [1] that require review in order to provide the necessary assurance that they will continue to perform their intended function for the period of extended operation.

On May 23, 1994, the NRC staff provided the Commission with its proposed amendment to the license renewal rule in SECY-94-140, "Proposed Amendment to the Nuclear Power Plant License Renewal Rule (10 CFR Part 54)." In the SRM of June 24, 1994, the Commission approved the publication of the proposed rule amendment for a 90-day public comment period. In the SRM, the Commission directed the staff to (1) ensure consistency in the use of the terms "structures, systems, and components" and "structures and components," (2) solicit comments on the ability of existing programs to detect failures in redundant structures and components before there is a loss of intended system or structure function, (3) address the need for § 54.4(a)(3) in the statements of consideration for the proposed rule, and (4) review the necessity of retaining § 54.4(a)(4) and include the rationale for its conclusions in the proposed rule.

On September 9, 1994, (59 FR 46574) the proposed revisions to the license renewal rule were published in the **Federal Register** for a 90-day public comment period. The public comment period ended on December 9, 1994. The Commission received 42 separate responses concerning the proposed rulemaking for license renewal. In early April 1995, after reviewing SECY-95-067, "Final Amendment to the Nuclear Power Plant License Renewal Rule (10 CFR Part 54)," the Nuclear Energy Institute and Yankee Atomic Electric Company provided additional comments. All comments received have been considered in developing this final rule.

Comments on the proposed rule came from a variety of sources. These included: a private citizen, 3 public interest groups (Sierra Club—Atlantic Chapter, Public Citizen, and the Ohio Citizens for Responsible Energy Inc.), 1 Federal organization (Department of Energy (DOE)), 4 State organizations (Illinois Department of Nuclear Safety (Illinois), Connecticut Department of Public Utility Control (Connecticut), New Jersey Department of Environmental Protection (New Jersey), and Nevada Agency for Nuclear Projects, Nuclear Waste Project Office (Nevada)), 2 industry organizations (NEI and Nuclear Utility Group on Equipment Qualification (NUGEQ)), 2 vendor owners groups (Babcock and Wilcox (B & W) Owners Group and Westinghouse Owners Group), 2 vendors/consultants (B & W Nuclear Technologies and Westinghouse Electric Corporation), and 27 separate nuclear power plant licensees. All 27 licensees endorsed the comments provided by NEI, and some utilities also provided additional comments.

The Commission specifically solicited responses to five questions in the proposed rule. The questions and the responses to them can be found in Section V of the Supplementary Information also known as the Statement of Considerations (SOC).

Many of the letters contained similar comments, which were grouped together and are addressed on an issue basis. The NRC has responded to all of the significant points raised by the commenters. Those comments that are applicable to a specific issue discussed in a specific section of the Supplementary Information portion of this document are discussed within that section. Comments received that are not responsive to a particular issue are addressed in Section IV. Public comments received on the proposed rule are available for inspection and copying for a fee at the Commission's Public Document Room located at 2120 L Street NW. (Lower Level), Washington, DC.

[1] Throughout the Statement of Considerations, the phrases, "systems, structures, and components" and "structures and components" are used. As a matter of clarification, the Commission intends that the phrase, "systems, structures, and components" applies to the matters involving the discussions of the overall renewal review, the specific license renewal scope (§ 54.4), time-limited aging analyses (§ 54.21(c)), and the license renewal finding (§ 54.29). The phrase, "structures and components" applies to matters involving the integrated plant assessment (IPA) required by § 54.21(a) because the aging management review required within the IPA should be a component and structure level review rather than a more general system level review. The phrase systems, structures, and components applies to the evaluation of time-limited aging analyses required by § 54.21(c) because such plant-specific analyses may have been carried out, for the initial operating term, for either systems, structures, or components. Reevaluation for the renewal term is intended to focus on the same systems, structures, or components subject to the initial term time-limited aging analyses. The finding required by § 54.29 considers both the results of the integrated plant assessment and the time-limited aging analyses and, therefore, the phrase system, structures, and components is applicable to this section.

HeinOnline -- 60 Fed. Reg. 22462 1995

## II. Final Action

The final rule revises certain requirements contained in 10 CFR Part 54 and establishes a regulatory process that is simpler, more stable, and more predictable than the previous license renewal rule. The final rule continues to ensure that continued operation beyond the term of the original operating license will not be inimical to the public health and safety. The more significant changes made to the previous license renewal rule are as follows:

(1) The intent of the license renewal review has been clarified to focus on the adverse *effects* of aging rather than identification of all aging *mechanisms*. The final rule is intended to ensure that important systems, structures, and components will continue to perform their intended function in the period of extended operation. Identification of individual aging mechanisms is not required as part of the license renewal review. The definitions of age-related degradation, age-related degradation unique to license renewal, aging mechanisms, renewal term, and effective program have been deleted.

(2) The definitions of integrated plant assessment (IPA) (§ 54.3) and the IPA process (§ 54.21(a)) have been clarified to be consistent with the revised focus in item (1) on the detrimental effects of aging.

(3) A new § 54.4 has been added to replace the definition of systems, structures, and components "important to license renewal" in § 54.3. Section 54.4 defines those systems, structures, and components within the scope of the license renewal rule and identifies the important functions (intended functions) that must be maintained. The requirement to include systems, structures, and components that have limiting conditions for operation in facility technical specifications within the scope of license renewal has been deleted.

(4) In § 54.21(a), the IPA process has been simplified. The wording has been changed to resolve any ambiguity associated with the use of the terms systems, structures, and components (SSCs) and structures and components (SCs). A simplified methodology for determining whether a structure or component requires an aging management review for license renewal has been delineated. Only passive, long-lived structures and components are subject to an aging management review for license renewal. Sections 54.21 (b) and (d) have been deleted, and a new § 54.21(c) dealing with time-limited aging analyses (TLAA) and § 54.21(d) dealing with requirements for the final safety analysis report (FSAR) supplement have been added. The requirement in § 54.21(c) of the previous rule to review any relief from codes and standards has been deleted, and the requirement in § 54.21(c) of the previous rule to review exemptions from regulatory requirements has been clarified and linked with the time-limited aging analyses.

(5) In § 54.22, the requirement to include detailed justification for certain technical specification changes in the FSAR supplement has been modified to require that the detailed justification be included in the license renewal application.

(6) In § 54.29, the standards for issuance of a renewed license have been changed to reflect the revised focus on the detrimental effects of aging concerning structures and components requiring an aging management review for license renewal and any time-limited issues (including exemptions) applicable for the renewal term. A new § 54.30 has been added to distinguish between those issues identified during the license renewal process that require resolution during the license renewal process and those issues that require resolution during the current license term.

(7) In § 54.33, requirements for continuation of the current licensing basis (CLB) and conditions of renewed licenses have been changed to delete all reference to age-related degradation unique to license renewal (ARDUTLR). Section 54.33(d) of the previous rule, which requires a specific change control process, has been deleted.

(8) In § 54.37, additional records and recordkeeping requirements have been changed to be less prescriptive. Section 54.37(c) has been deleted.

## III. Principal Issues

### *a. Continued Validity of Certain Findings in Previous Rulemaking*

The principal purpose of this final rule is to simplify and clarify the previous license renewal rule. Unless otherwise clarified or reevaluated, either directly or indirectly, in the discussion for this final rule, the conclusions in the SOC for the previous license renewal rule remain valid (56 FR 64943; December 13, 1991).

One commenter stated that the previous license renewal rule has been substantially modified in the proposed rule so as to constitute a "recision" of the previous rule.

The Commission does not believe that this final rule represents a recision of the previous license renewal rule, 10 CFR Part 54. As stated in the SOC for the proposed rule, "[u]nless otherwise clarified or reevaluated, either directly or indirectly, in the discussion for this proposed rule, the conclusions in the SOC for the current license renewal rule remain valid * * *" September 9, 1994 (59 FR 46576). Some of the subjects resolved in the previous Part 54 rulemaking that remain unaffected by this final rule include the concept of the CLB, the nature of the current regulatory process, the regulatory process for assuring compliance with the CLB, form of the renewed license, the term of the renewed license, antitrust considerations, and the applicability of the provisions of the Price-Anderson Act.

Furthermore, regardless of whether this final rule constitutes a recision of the previous rule, the Commission agrees with the commenter that the Administrative Procedure Act (APA) requires the Commission to provide a "reasoned analysis" for the changes to Part 54 that are being adopted in this final rule. The Commission takes issue with the commenter with regard to whether the SOC for the proposed and for the final rule adequately explain the bases for the changes. The Commission believes that this SOC provides a detailed discussion setting forth the perceived problems with the previous license renewal rule as well as a discussion of the bases for this final rule. In sum, the Commission has fulfilled its obligation under the APA to provide the bases for this rule, regardless of whether the changes that are being adopted in this final rule constitute a recision of the previous license renewal rule.

### *b. Reaffirmation of the Regulatory Philosophy and Approach and Clarification of the Two Principles of License Renewal*

(i) Regulatory Philosophy

In developing the previous license renewal rule, the Commission concluded that issues material to the renewal of a nuclear power plant operating license are to be confined to those issues that the Commission determines are uniquely relevant to protecting the public health and safety and preserving common defense and security during the period of extended operation. Other issues would, by definition, have a relevance to the safety and security of the public during current plant operation. Given the Commission's ongoing obligation to oversee the safety and security of operating reactors, issues that are relevant to current plant operation will be addressed by the existing regulatory

HeinOnline -- 60 Fed. Reg. 22463 1995

process within the present license term rather than deferred until the time of license renewal. Consequently, the Commission formulated two principles of license renewal.

The first principle of license renewal was that, with the exception of age-related degradation unique to license renewal and possibly a few other issues related to safety only during the period of extended operation of nuclear power plants, the regulatory process is adequate to ensure that the licensing bases of all currently operating plants provides and maintains an acceptable level of safety so that operation will not be inimical to public health and safety or common defense and security. Moreover, consideration of the range of issues relevant only to extended operation led the Commission to conclude that the detrimental effects of aging is probably the only issue generally applicable to all plants. As a result, continuing this regulatory process in the future will ensure that this principle remains valid during any period of extended operation if the regulatory process is modified to address age-related degradation that is of unique relevance to license renewal. Consequently, the previous license renewal rule focused the Commission's review on this one safety issue.

The second and equally important principle of license renewal holds that the plant-specific licensing basis must be maintained during the renewal term in the same manner and to the same extent as during the original licensing term. This principle would be accomplished, in part, through a program of age-related degradation management for systems, structures, and components that are important to license renewal as defined in the previous rule.

The Commission still believes that mitigation of the detrimental effects of aging resulting from operation beyond the initial license term should be the focus for license renewal. After further consideration and experience in implementing the previous rule, the Commission has, however, determined that the requirements for carrying out the license renewal review can and should be simplified and clarified. The Commission has concluded that, for certain plant systems, structures, and components, the existing regulatory process will continue to mitigate the effects of aging to provide an acceptable level of safety in the period of extended operation.

The objective of a license renewal review is to determine whether the detrimental effects of aging, which could adversely affect the functionality of systems, structures, and components that the Commission determines require review for the period of extended operation, are adequately managed. The license renewal review is intended to identify any additional actions that will be needed to maintain the functionality of the systems, structures, and components in the period of extended operation. The Commission has determined that it can generically exclude from the IPA aging management review for license renewal (1) those structures and components that perform active functions and (2) structures and components that are replaced based on qualified life or specified time period. However, all systems, structures, and components evaluated based on time-limited aging analyses would be subject to a license renewal evaluation. Structures or components may have active functions, passive functions, or both. Detailed discussions concerning determination of those systems, structures, and components requiring a license renewal review are contained in Section III.c of this SOC; detailed discussions of those structures and components subject to an aging management review are in Section III.f of this SOC; and detailed discussions of systems, structures, and components requiring a license renewal evaluation are contained in Section III.g of this SOC.

This final rule focuses the license renewal review on certain systems, structures, and components that the Commission has determined require evaluation to ensure that the effects of aging will be adequately managed in the period of extended operation. This change is viewed as a modification consistent with the first principle of license renewal established in the previous rule. In view of this final rule, the first principle can be revised to state that, with the possible exception of the detrimental effects of aging on the functionality of certain plant systems, structures, and components in the period of extended operation and possibly a few other issues related to safety only during extended operation, the regulatory process is adequate to ensure that the licensing bases of all currently operating plants provides and maintains an acceptable level of safety so that operation will not be inimical to public health and safety or common defense and security. As modified, the Commission affirms its support of the first principle of license renewal, as well as the (unmodified) second principle.

(ii) Deletion of the term "Age-Related Degradation Unique to License Renewal"

The use of the term "age-related degradation unique to license renewal" in the previous license renewal rule caused significant uncertainty and difficulty in implementing the rule. A key problem involved how "unique" aging issues were to be identified and, in particular, how existing licensee activities and Commission regulatory activities would be considered in the identification of systems, structures, and components as either subject to or not subject to ARDUTLR. The difficulty in clearly establishing "uniqueness" in connection with the effects of aging is underscored by the fact that aging is a continuing process, the fact that many licensee programs and regulatory activities are already focused on mitigating the effects of aging to ensure safety in the current operating term of the plant, and the fact that no new aging phenomena have been identified as potentially occurring only during the period of extended operation.

The final rule eliminates both the definition of ARDUTLR and use of the term in codified regulatory text. Thus, confusion regarding the detailed definition of ARDUTLR in the rule and questions regarding which structures and components could be subject to ARDUTLR have been eliminated.

Public Citizen noted that deletion of the term ARDUTLR represents alteration of the "original premise" of the rule and this change "has not been precipitated by any realization about reactor aging and safety." Under both the previous renewal rule as well as this final rule, the objective was to supplement the regulatory process, if warranted, to provide sufficient assurance that adequate safety will be assured during the extended period of operation. The Commission has concluded that the only issue where the regulatory process may not adequately maintain a plant's current licensing basis concerns the detrimental effects of aging on the functionality of certain systems, structures, and components in the period of extended operation. While the objective and conclusion has remained the same in the two rulemakings, the first principle of license renewal has been revised consistent with the deletion of ARDUTLR. The Commission recognizes that the concept of ARDUTLR has been removed inasmuch as the term "ARDUTLR" has been deleted from the first principle and from the rule language itself. However, consistent with the focus of the previous rule, the final rule will ensure that the

HeinOnline -- 60 Fed. Reg. 22464 1995

effects of aging in the period of extended operation are adequately managed.

The Commission disagrees with the commenter's statement that this change was arrived at without regard to reactor aging and safety. As discussed above, greater understanding that (1) aging is a continuous process and (2) that the actual effects of aging are not explicitly linked, from a technical perspective, to the term of an operating license, led the Commission to consider deleting ARDUTLR. The Commission's current determination that a narrower set of systems, structures, and components than that of the previous license renewal rule should require evaluation to ensure that the effects of aging will be adequately managed in the period of extended operation recognizes that many licensee programs and regulatory activities will continue to adequately manage the adverse effects of aging during the period of extended operation. Therefore, the Commission believes that this alteration is firmly based on an appropriate consideration of reactor safety and aging. The final rule reflects a greater understanding of effective aging management (focus on effects rather than mechanisms) and more realistic expectations of aging in the extended period of operation.

*c. Systems, Structures, and Components Within the Scope of License Renewal*

(i) Scope of the License Renewal Review and Elimination of the Technical Specification Limiting Conditions for Operation Scoping Category

In the final rule, the Commission has deleted the definition (in § 54.3) of systems, structures, and components important to license renewal and replaced it with a new section entitled § 54.4 Scope. This new section continues to define the set of plant systems, structures, and components that would be the initial focus of a license renewal review. From this set of systems, structures, and components, a license renewal applicant will determine those systems, structures, and components that require review for license renewal. The intent of the definition of systems, structures, and components important to license renewal (i.e., to initially focus the review on important systems, structures, and components) remains intact in the new § 54.4.

In the SOC for the previous license renewal rule, the Commission concluded that applicants for license renewal should focus on the management of aging for those systems, structures, and components that are of principal importance to the safety of the plant. The Commission also believed that the focus of an aging evaluation for license renewal cannot be limited to only those systems, structures, and components that the Commission has traditionally defined as safety-related. Therefore, the Commission determined that, in order to ensure the continued safe operation of the plant during the renewal term, the initial focus of license renewal should be (1) safety-related systems, structures, and components, (2) nonsafety-related systems, structures, and components that directly support the function of a safety-related system, structure, or component or whose failure could prevent the performance of a required function of a safety-related system, structure, or component, (3) systems, structures, and components relied upon to meet a specific set of Commission regulations, and (4) systems, structures, and components subject to the operability requirements contained in the facility technical specification limiting conditions for operation.

Since publishing the previous rule, the Commission has gained considerable preapplication rule implementation experience and gained a better understanding of aging management, in part, through the development of a regulatory guide to implement the maintenance rule, 10 CFR 50.65. The Commission now believes that (1) by appropriately crediting existing licensee programs that manage the effects of aging and (2) by appropriately crediting the continuing regulatory process, it can more narrowly define those systems, structures, and components within the scope of license renewal and more narrowly focus the license renewal review.

The Commission continues to believe that the initial scope for the license renewal review should not be limited to only those systems, structures, or components that the Commission has traditionally defined as safety-related. However, as discussed below (see Justification for the Elimination of the Technical Specification Limiting Conditions for Operation Scoping Category) the Commission determined that the requirement to consider additional systems, structures, and components subject to the operability requirements contained in the facility technical specification limiting conditions for operation is unnecessary and has been deleted.

The first two categories of systems, structures, and components discussed in the new scope section (§ 54.4(a)(1) and (a)(2)) are the same categories defined in the previous definition of systems, structures, and components important to license renewal. These scoping categories concern (1) all safety-related systems, structures, and components and (2) all nonsafety-related systems, structures, and components that support the function of a safety-related system, structure, or component or whose failure could prevent a safety-related system, structure, or component from satisfactorily fulfilling its intended function(s). These two categories are meant to capture, as a minimum, automatic reactor shutdown systems, engineered safety feature systems, systems required for safe shutdown (achieve and maintain the reactor in a safe shutdown condition), and nonsafety-related systems, such as auxiliary systems, necessary for the function of safety-related systems.

The third category of systems, structures, and components discussed in the new scope section (§ 54.4(a)(3)) are those systems, structures, and components whose functionality may be relied on in safety analyses or plant evaluations to perform a function that demonstrates compliance with the Commission's regulations for 10 CFR 50.48 (Fire Protection), 10 CFR 50.49 (Environmental Qualification), 10 CFR 50.61 (Pressurized Thermal Shock), 10 CFR 50.62 (Anticipated Transients Without Scram), and 10 CFR 50.63 (Station Blackout). This category is also specified in the previous definition of systems, structures, and components important to license renewal and included those systems, structures, and components relied upon to meet certain regulations. This category was developed to ensure that important systems, structures, and components that may be considered outside the traditional definition of safety-related and outside of the first two categories in § 54.4, would be included within the initial focus of license renewal. Through evaluation of industry operating experience and through continuing regulatory analysis, the Commission has reaffirmed that systems, structures, and components required to comply with these regulations are important to safe plant operation because they provide substantial additional protection to the public health and safety or are an important element in providing adequate protection to the public health and safety. The Commission, therefore, concludes that these systems, structures, and components should be included as part of the initial scope of the license renewal review.

In their comments on the proposed revision to the rule, NUGEQ noted that there is substantial overlap between the

HeinOnline -- 60 Fed. Reg. 22465 1995

equipment that would be identified in § 54.4(a) and the electrical equipment important to safety identified in § 50.49(b). To provide clarity and consistency and minimize the potential that a licensee will be required to reassess the entire scope of § 50.49 equipment, NUGEQ suggests that § 54.4(a)(3) be modified to include only the additional electric equipment identified in § 50.49(b)(3). The Commission concludes that the rule modification proposed by NUGEQ is not necessary. However, the Commission agrees that for purposes of § 54.4, the scope of § 50.49 equipment to be included within § 54.4 is that equipment already identified by licensees under 10 CFR 50.49(b). Licensees may rely upon their listing of 10 CFR 50.49 equipment, as required by 10 CFR Part 50.49(d), for purposes of satisfying § 54.4 with respect to equipment within the scope of § 50.49.

Justification for the Elimination of the Technical Specification Limiting Conditions for Operation Scoping Category

In the previous license renewal rule, the Commission established a fourth category of systems, structures, and components to be the focus of the initial license renewal review. In this category, the Commission included all systems, structures, and components that have operability requirements in the plant technical specifications limiting conditions for operation. As defined in Standard Technical Specifications, "a system, subsystem, train, component, or device shall be operable when it is capable of performing its specified safety function(s) and when all necessary attendant instrumentation, controls, normal or emergency electrical power, cooling and seal water, lubrication, and other auxiliary equipment that are required for the system, subsystem, train, component, or device to perform its specified safety function(s) are also capable of performing their related support function(s)." This was intended to include (1) all systems, structures, and components specifically identified in the technical specification limiting conditions for operation, (2) any system, structure or component for which a functional requirement is specifically identified in the technical specification limiting conditions for operation, and (3) any necessary supporting system, structure or component that must be operable or have operability in order for a required system, structure, or component to be operable.

The Commission previously considered the technical specification limiting conditions for operation scoping category to be consistent with the Commission's intent not to re-examine the entire plant for license renewal but to ensure that all systems, structures, and components of principal importance to safe plant operation were identified and, if necessary, evaluated. However, existing technical specifications for many plants have functional requirements on certain systems, structures, and components with low or indirect safety significance. Preapplication rule implementation experience has indicated that this category of systems, structures, and components, as defined in the previous rule, could lead to an unwarranted re-examination of plant systems, structures, and components that are not of principal importance for license renewal.

For example, limiting conditions for operation are frequently included in technical specifications for plant meteorological and seismic monitoring instrumentation, main turbine bypass systems, and traversing incore probes. These requirements, while important for certain aspects of power plant operation, have little or no direct bearing on protection of public health and safety. Recognizing this, the Commission concludes that current activities for such systems, structures, and components, including licensee programs and the NRC regulatory process, are sufficient and that no additional evaluation is necessary for license renewal. The technical specification category would only add (i.e., not captured by § 54.4(a)(1)–(3)) nonsafety-related systems, structures, and components that do *not* support safety-related systems, structures, and components. As discussed in greater detail below, the Commission concludes that these additional nonsafety-related systems, structures, and components should not be the subject of license renewal.

Relationship Between Improved Technical Specifications and License Renewal Scoping

While it is not the Commission's intent to require applicants for license renewal to "improve" their technical specifications, it remains the Commission's intent to focus the license renewal review on those systems, structures, and components that are of principal importance to safety. Therefore, a license renewal scoping category that requires wholesale consideration of systems, structures, and components within the scope of technical specifications may not appropriately focus licensee and NRC resources on those systems, structures, and components that are of principal importance to safety.

In its "Final Policy Statement on Technical Specifications Improvements for Nuclear Power Reactors" (58 FR 39132; July 22, 1993), the Commission identified four criteria for defining the scope of improved technical specifications. The four criteria are as follows:

*Criterion 1:* Installed instrumentation that is used to detect, and indicate in the control room, a significant abnormal degradation of the reactor coolant pressure boundary.

*Criterion 2:* A process variable, design feature, or operating restriction that is an initial condition of a Design Basis Accident or Transient analysis that either assumes the failure of or presents a challenge to the integrity of a fission product barrier.

*Criterion 3:* A structure, system, or component that is part of the primary success path and which functions or actuates to mitigate a Design Basis Accident or Transient that either assumes the failure of or presents a challenge to the integrity of a fission product barrier.

*Criterion 4:* A structure, system, or component which operating experience or probabilistic safety assessment has shown to be significant to public health and safety.

Nuclear power plant licensees that voluntarily choose to "improve" their technical specifications based on this Commission policy may submit changes to the Commission for review and approval that will remove systems, structures, and components from their technical specifications before conducting license renewal (experience shows that approximately 40 percent of limiting conditions for operation and surveillance requirements could be deleted).

After considering the substantial overlap between the four criteria for defining the scope of technical specifications and the first three scoping categories for license renewal, the Commission concluded that the number of additional systems, structures, and components that would be considered as a result of applying the technical specification scoping category to improved technical specifications is small. These additional systems, structures, and components most likely would result from differences in each plant's current licensing basis and from the application of these criteria and categories on a plant-specific bases.

The Commission cannot make conclusions in this rulemaking about the appropriateness of whether these

HeinOnline -- 60 Fed. Reg. 22466 1995

additional systems, structures, and components should be included in an individual plant's technical specifications. However, the Commission can conclude that these additional systems, structures, and components are of a relatively lower safety significance because they are, by exclusion, nonsafety-related systems, structures, and components whose failure cannot prevent the performance or reduce the availability of a safety-related system, structure, or component. Additionally, the Commission believes that the existing regulatory process for these additional nonsafety-related systems, structures, and components is adequate to ensure that age degradation will not result in a loss of functionality in accordance with the CLB.

The Commission believes that there is sufficient experience with its policy on technical specifications to apply that policy generically in revising the license renewal rule consistent with the Commission's desire to credit existing regulatory programs. Therefore, the Commission concludes that the technical specification limiting conditions for operation scoping category is unwarranted and has deleted the requirement that identifies systems, structures, and components with operability requirements in technical specifications as being within the scope of the license renewal review

(ii) Intended Function

The previous license renewal rule required an applicant for license renewal to identify, from systems, structures, and components important to license renewal, those structures and components that contribute to the performance of a "required function" or could, if they fail, prevent systems, structures, and components from performing a "required function." This requirement initially posed some difficulty in conducting pre-application reviews of proposed scoping methodologies because it was not clear what was meant by "required function." Most systems, structures, and components have more than one function and each could be regarded as "required." Although the Commission could have required a licensee to ensure all functions of a system, structure, or component as part of the aging management review, the Commission concluded that this requirement would be unreasonable and inconsistent with the Commission's original intent to focus only on those systems, structures, and components of primary importance to safety. Consideration of ancillary functions would expand the scope of the license renewal review beyond the Commission's intent. Therefore, the Commission determined that "required function" in the previous license renewal rule refers to those functions that are responsible for causing the systems, structures, and components to be considered important to license renewal.

To avoid any confusion with the previous rule, the Commission has changed the term "required function" to "intended function" and explicitly stated in § 54.4 that the intended functions for systems, structures, and components are the same functions that define the systems, structures, and components as being within the scope of the final rule.

(iii) Bounding the Scope of Review

Pre-application rule implementation has indicated that the description of systems, structures, and components subject to review for license renewal could be broadly interpreted and result in an unnecessary expansion of the review. To limit this possibility for the scoping category relating to nonsafety-related systems, structures, and components, the Commission intends this nonsafety-related category (§ 54.4(a)(2)) to apply to systems, structures, and components whose failure would prevent the accomplishment of an intended function of a safety-related system, structure, and component. An applicant for license renewal should rely on the plant's CLB, actual plant-specific experience, industry-wide operating experience, as appropriate, and existing engineering evaluations to determine those nonsafety-related systems, structures, and components that are the initial focus of the license renewal review. Consideration of hypothetical failures that could result from system interdependencies that are not part of the CLB and that have not been previously experienced is not required.

Likewise, to limit the potential for unnecessary expansion of the review for the scoping category concerning those systems, structures, and components whose function is relied upon in certain plant safety analyses to demonstrate compliance with the Commission regulations (i.e., environmental qualification, station blackout, anticipated transient without scram, pressurized thermal shock, and fire protection), the Commission intends that this scoping category include all systems, structures, and components whose function is relied upon to demonstrate compliance with these Commission's regulations. An applicant for license renewal should rely on the plant's current licensing bases, actual plant-specific experience, industry-wide operating experience, as appropriate, and existing engineering evaluations to determine those systems, structures, and components that are the initial focus of the license renewal review. Consideration of hypothetical failures that could result from system interdependencies, that are not part of the current licensing bases and that have not been previously experienced is not required.

Several commenters noted that the word "directly" did not precede the phrase "prevent satisfactory accomplishment of any of the functions identified in paragraphs (a)(1)(i), (ii), or (iii) of this section" in § 54.4(a)(2) and concluded that, in the absence of the word "directly," the license renewal review could cascade into a review of second-, third-, or fourth-level support systems. The Commission reaffirms its position that consideration of hypothetical failures that could result from system interdependencies that *are not part of the CLB* and that have not been previously experienced is not required. However, for some license renewal applicants, the Commission cannot exclude the possibility that hypothetical failures that *are part of the CLB* may require consideration of second-, third-, or fourth-level support systems. In these cases the word "directly" may cause additional confusion, not clarity, regarding the systems, structures and components required to be within the scope of license renewal. In removing the word "directly" from this scoping criterion, the Commission believes it has (1) achieved greater consistency between the scope of the license renewal rule and the scope of the maintenance rule (§ 50.65) regarding nonsafety-related systems whose failure could prevent satisfactory accomplishment of safety-related functions and thus (2) promoted greater efficiency and predictability in the license renewal scoping process.

The inclusion of nonsafety-related systems, structures, and components whose failure could prevent other systems, structures, and components from accomplishing a safety function is intended to provide protection against safety function failure in cases where the safety-related structure or component is not itself impaired by age-related degradation but is vulnerable to failure from the failure of another structure or component that may be so impaired. Although it may be considered outside the scope of the maintenance rule, the Commission intends to include equipment that is not seismically qualified located near seismically qualified equipment (i.e

HeinOnline -- 60 Fed. Reg. 22467 1995

Seismic II/I equipment already identified in a plant CLB) in this set of nonsafety-related systems, structures and components.

In one of its comments, the Sierra Club indicated that all nonsafety-related equipment and required functions should be considered because failures could go unnoticed for a long period of time and start a chain reaction that could lead to catastrophic events. Nevada also proposed a fuel life-cycle approach to license renewal that would consider the plant operations as an "Integrated Operating System." The Commission disagrees with the Sierra Club comment and the Commission concludes that the license renewal approach proposed by Nevada would result in the consideration of issues outside the scope of this rule and result in consideration of additional systems, structures, and components that are not directly related to the safe operation of the plant for the period of extended operation. The Commission has reviewed its scoping criteria and determined that the criteria (1) reflect an appropriate consideration of the existing regulatory process, (2) properly focus the initial license renewal review on those systems, structures, and components that are most important to safety and (3) will not result in an unwarranted re-examination of the entire plant.

One commenter indicated that the scope of systems, structures, and components considered for license renewal could be further reduced by identifying and addressing the very few issues in which a plant's design must specifically consider 40 years of degradation. In one of its comments, Illinois suggested that those systems, structures and components required to mitigate a sequence leading to core damage, as determined by plant-specific probabilistic analyses, and those systems, structures, and components required to make protective action recommendations for the protection of the public, should also be included in the scope of this rulemaking.

As the commenter suggested, the Commission did consider further limiting the scope of license renewal to certain issues in a plant's design that were specifically based on a time period bounded by the current license term (40 years). As a result, the Commission explicitly identified the need to review time-limited aging analyses and incorporated this requirement into the final rule. However, as discussed in Section III.d and III.f of this SOC, the Commission determined that, at this time, there was not an adequate basis to generically exclude passive, long-lived structures and components from an aging management review. Therefore, the Commission believes it is inappropriate to further reduce the systems, structures, and components within the scope of license renewal.

Regarding the use of probabilistic analyses in the license renewal scoping process, a separate Section III.c(iv) has been added to the SOC, to discuss the role of probabilistic risk assessment in license renewal. Regarding systems, structures, and components required to make protective action recommendations, the Commission thoroughly evaluated emergency planning considerations in the previous license renewal rulemaking. These evaluations and conclusions are still valid and can be found in the SOC for the previous license renewal rule (56 FR 64943 at 64966). Therefore, the Commission concludes that systems, structures, and components required for emergency planning, unless they meet the scoping criteria in § 54.4, should not be the focus of a license renewal review.

(iv) Use of Probabilistic Risk Assessment in License Renewal

Several comments from Illinois concerned the use of probabilistic analysis techniques in the license renewal process. Illinois indicated that the NRC should require rigorous probabilistic analyses, require these analyses to be used in appropriate regulatory applications, and require these probabilistic analyses to be updated, as needed. In addition, Illinois noted that the previous rule and the proposed rule did not require consideration of individual plant examination (IPE) results.

The Commission is finalizing a policy statement regarding the increased use of probabilistic risk assessment (PRA) methods in nuclear regulatory activities (59 FR 63389; December 8, 1994). However, there is currently no additional guidance for licensees to conduct more rigorous probabilistic analyses beyond the guidance for an IPE and an IPE External Events (IPEEE) (Generic Letter 88–20). The Commission's consideration of regulatory requirements associated with developing, maintaining, or using probabilistic analyses is beyond the scope of this rulemaking.

The CLB for currently operating plants is largely based on deterministic engineering criteria. Consequently, there is considerable logic in establishing license renewal scoping criteria that recognize the deterministic nature of a plant's licensing basis. Without the necessary regulatory requirements and appropriate controls for plant-specific PRAs, the Commission concludes that it is inappropriate to establish a license renewal scoping criterion, as suggested by Illinois, that relies on plant-specific probabilistic analyses. Therefore, within the construct of the final rule, PRA techniques are of very limited use for license renewal scoping.

In license renewal, probabilistic methods may be most useful, on a plant-specific basis, in helping to assess the relative importance of structures and components that are subject to an aging management review by helping to draw attention to specific vulnerabilities (e.g. results of an IPE or IPEEE). Probabilistic arguments may assist in developing an approach for aging management adequacy. However, probabilistic arguments alone will not be an acceptable basis for concluding that, for those structures and components subject to an aging management review, the effects of aging will be adequately managed in the period of extended operation.

Illinois also indicated that as probabilistic insights are more fully integrated with our traditional deterministic methods of regulation, they may define a narrower safety focus Thus, the use of probabilistic insights could reduce the scope of the very programs that the license renewal rule credits for monitoring and identifying the effects of aging.

The Commission reaffirms its previous conclusion (see 56 FR 64943 at 64956) that PRA techniques are most valuable when they focus the traditional, deterministic-based regulations and support the defense-in-depth philosophy. In this regard, PRA methods and techniques would focus regulations and programs on those items most important to safety by eliminating unnecessary conservatism or by supporting additional regulatory requirements. PRA insights would be used to more clearly define a proper safety focus, which may be narrower or may be broader. In any case, PRA will not be used to justify poor performance in aging management or to reduce regulatory or programmatic requirements to the extent that the implementation of the regulation or program is no longer adequate to credit for monitoring or identifying the effects of aging.

*d. The Regulatory Process and Aging Management*

(i) Aging Mechanisms and Effects of Aging

The license renewal review approach discussed in the SOC accompanying the December 13, 1991, rule emphasized the

identification and evaluation of aging mechanisms for systems, structures, and components within the scope of the rule. Primarily through pre-application implementation experience associated with the previous license renewal rule and the evaluation of comments resulting from the September 1993 license renewal workshop, the Commission determined that an approach to license renewal that focuses only on the identification and evaluation of aging mechanisms could constitute an open-ended research project. Ultimately, this type of approach may not provide reasonable assurance that certain systems, structures, and components will continue to perform their intended functions. The Commission believes that regardless of the specific aging mechanism, only aging degradation that leads to degraded performance or condition (i.e., detrimental effects) during the period of extended operation is of principal concern for license renewal. Because the detrimental effects of aging are manifested in degraded performance or condition, an appropriate license renewal review would ensure that licensee programs adequately monitor performance or condition in a manner that allows for the timely identification and correction of degraded conditions. The Commission concludes that a shift in focus to managing the detrimental effects of aging for license renewal reviews is appropriate and will provide reasonable assurance that systems, structures, and components are capable of performing their intended function during the period of extended operation

This shift in focus of the license renewal review has resulted in several proposed changes to the license renewal rule. These changes include deleting the definitions of aging mechanism and age-related degradation and replacing the requirement to manage ARDUTLR in the IPA with a requirement to demonstrate that the effects of aging will be adequately managed for the period of extended operation.

Illinois commented that additional research should be undertaken to ensure all aging effects are understood. Mitigating the effects of aging cannot be completely divorced from understanding the aging mechanisms. Illinois indicated that the effects of aging on a system, structure, and component cannot be managed without some consideration of all the aging mechanisms causing the effects. As some aging mechanisms are not well understood, research will still need to be performed, and the regulatory process will still need to be adequate to address aging uncertainties.

When the Commission concluded that the proper approach for a license renewal review was one that focused on mitigating the detrimental effects of aging regardless of the mechanisms causing the effects, the intent was to concentrate efforts on identification of functional degradation; that is, except for well-understood aging mechanisms, the straightforward approach to detecting and mitigating the effects of aging begins with a process that verifies that the intended design functions of systems, structures, and components have not been compromised or degraded. Once functional degradation is identified through performance or condition monitoring, corrective actions can be applied. The Commission agrees that adverse aging effects cannot be completely divorced from an understanding of the aging mechanisms The corrective actions that should be taken following identification of functional degradation logically include determination of the cause of the degradation, which could involve mechanisms other than aging (e.g., faulty manufacturing processes, faulty maintenance, improper operation, or personnel errors). If one or more aging mechanisms are the cause of functional degradation, corrective actions should focus, as appropriate, on prevention, elimination, or management of the effects caused by the mechanism(s) in the future. Licensees are required by current regulations to develop and implement programs that ensure that conditions adverse to quality, including degraded system, structure, and component function, are promptly identified and corrected.

(ii) Regulatory Requirements and Reliance on the Regulatory Process for Managing the Effects of Aging

Commercial nuclear power plants have been performing a variety of maintenance activities that function effectively as aging management programs since plants were initially constructed. The Commission also recognizes that both the industry and the NRC have acquired extensive experience and knowledge in the area of nuclear power plant maintenance. Regarding the need for a maintenance rule, the results of the Commission's maintenance team inspections (MTIs) indicated that licensees generally have adequate maintenance programs in place and have exhibited an improving trend in implementing them (56 FR 31307; July 10, 1991). However, the Commission determined that a maintenance rule was needed, in part because the MTIs identified some common maintenance-related weaknesses, such as inadequate root-cause analysis leading to repetitive failures, lack of equipment performance trending, and lack of appropriate consideration of plant risk in the prioritization, planning, and scheduling of maintenance.

The Commission amended its regulations, at 10 CFR 50.65, on July 10, 1991 (56 FR 31306), to require commercial nuclear power plant licensees to monitor the effectiveness of maintenance activities for safety-significant plant equipment to minimize the likelihood of failures and events caused by the lack of effective maintenance. The maintenance rule and its implementation guidance (1) Provide for continued emphasis on the defense-in-depth principle by including selected balance-of-plant (BOP) systems, structures, and components, (2) integrate risk consideration into the maintenance process, (3) provide an enhanced regulatory basis for inspection and enforcement of BOP maintenance-related issues, and (4) provide a strengthened regulatory basis for ensuring that the progress achieved to date is sustained in the future. The requirements of the maintenance rule must be implemented by each licensee by July 10, 1996.

In June 1993, the NRC issued Regulatory Guide 1.160, "Monitoring the Effectiveness of Maintenance at Nuclear Power Plants." The regulatory guide provides an acceptable method for complying with the requirements of the maintenance rule and states that a licensee can use alternative methods if the licensee can demonstrate that these alternative methods satisfy the requirements of the rule. Because aging is a continuing process, the Commission has concluded that existing programs and regulatory requirements that continue to be applicable in the period of extended operation and provide adequate aging management for systems, structures, and components should be credited for license renewal. Accordingly, the amendment to the license renewal rule focuses the renewal review on plant systems, structures, and components for which current activities and requirements may not be sufficient to manage the effects of aging in the period of extended operation.

Since publishing the license renewal rule on December 13, 1991, the regulatory process (e.g., regulatory requirements, aging research, inspection requirements, and inspection philosophy) for managing the detrimental effects of aging for important systems, structures, and

HeinOnline -- 60 Fed. Reg. 22469 1995

components has continued to evolve. The changes in the regulatory process and initial experience with the license renewal rule have had a direct bearing on the Commission's conclusions regarding the appropriate focus of aging management review for systems, structures, and components that are within the scope of the license renewal rule, and how these systems, structures, and components are treated in the IPA process.

(iii) Maintenance Rule Requirements and Implementation

As discussed in the regulatory analysis for the maintenance rule and in Regulatory Guide 1.160, the Commission's determination that a maintenance rule was needed arose from the conclusion that proper maintenance was essential to plant safety. A clear link exists between effective maintenance and safety as it relates to factors such as the number of transients and challenges to safety-related systems and the associated need for operability, availability, and reliability of safety-related systems, structures, and components. In addition, good maintenance is important to providing assurance that failures of other than safety-related systems, structures, and components that could initiate or adversely affect a transient or accident are minimized. Minimizing challenges to safety-related systems is consistent with the Commission's defense-in-depth philosophy. Therefore, nuclear power plant maintenance is clearly important to protecting the public health and safety.

The maintenance rule requires that power reactor licensees monitor the performance or condition of systems, structures, and components against licensee-established goals in a manner sufficient to provide reasonable assurance that these systems, structures, and components are capable of fulfilling their intended functions. Performance and condition monitoring against licensee-established goals is not required, where it can be demonstrated that the performance or condition of systems, structures, and components is being effectively controlled through the performance of appropriate preventive maintenance. Performance and condition-monitoring activities and associated goals and preventive maintenance activities must be evaluated once every refueling cycle, provided the interval between evaluations does not exceed 24 months.

As discussed in Regulatory Guide 1.160, the extent of monitoring may vary from system to system, depending on the system's importance to risk. Some monitoring at the component level may be necessary, although, most of the monitoring could be done at the plant, system, or system train level. For systems, structures, and components that fall within the requirements of § 50.65(a)(1), licensees must establish goals and monitor performance against these goals. These goals should be derived from information in the CLB and should be established commensurate with safety significance of the systems, structures, or components. These goals may be performance-oriented (reliability, unavailability) or condition-oriented (pump flow, pressure, vibration, valve stroke time, current, electrical resistance). An effective preventive maintenance program is required under § 50.65(a)(2) if monitoring under § 50.65(a)(1) is not performed.

The SOC for the maintenance rule (56 FR 31308; July 10, 1991) states that the scope of § 50.65(a)(2) includes those systems, structures, and components that have "inherently high reliability" without maintenance. It is expected that many long-lived, passive structures and components could be considered inherently reliable by licensees and not be monitored under 10 CFR 50.65(a)(1). There may be few, if any, actual maintenance activities (e.g., inspection or condition monitoring) that a licensee conducts for such structures and components. Further, experience gained under the previous license renewal rule, staff review of industry reports, NRC aging research, and operating experience indicate that such structures and components should be reviewed for license renewal if they are passive and long-lived. Therefore, the Commission believes that such structures and components that are technically within the scope of the maintenance rule should not be generically excluded from review for license renewal on the basis of their inherent reliability.

Although the maintenance rule does not become effective and enforceable until July 10, 1996, the Commission believes that crediting the rule (along with the entire regulatory program) is acceptable to support managing the effects of aging for certain systems, structures, and components. As discussed in Regulatory Guide 1.160, implementation of the maintenance rule relies extensively on existing maintenance programs and activities. The industry has developed guidance for complying with the maintenance rule and the NRC staff has reviewed this guidance and found it acceptable. Many utilities are expected to follow the industry guidance in implementing the maintenance rule. Furthermore, the failure of any licensee to comply with the maintenance rule is enforceable by the Commission after July 10, 1996.

One commenter stated that reliance on the maintenance rule is inappropriate because the NRC does not plan to scrutinize every system, structure, and component and how it is monitored in assuring compliance with the maintenance rule. According to the commenter, if there are uncertainties in the maintenance rule or its implementation, then there is uncertainty in the license renewal rule. The commenter also stated that the aging management analyses and measurements required by the license renewal rule for the period of extended operation should commence for all operating reactors when the maintenance rule goes into effect. The NRC disagrees with the commenter that the 100-percent inspection of all systems, structures, and components is necessary to verify compliance with NRC requirements, including the maintenance rule. The Commission disagrees with the commenter that the licensees should be required to commence aging management reviews required for license renewal when the maintenance rule becomes effective.

As discussed in the SOC for the previous rule (56 FR at 64951), the NRC inspection methodology utilizes a sampling technique. When problems are identified, the inspection sample size is broadened to determine the extent of the problem. Additionally, while the maintenance rule does not require licensees to submit their maintenance programs to the NRC for review and approval, compliance with the requirements of the maintenance rule will be verified through the NRC inspection process. The NRC will be conducting inspections on a routine basis onsite to verify licensee compliance with the maintenance rule Furthermore, as discussed in Section III(d)(iv) of this SOC, the maintenance rule allows for monitoring at a train, system, or plant level, and that goals should be commensurate with safety If performance problems arise, corrective action requirements of 10 CFR 50, Appendix B, and the maintenance rule require effective corrective actions to preclude repetition of the failure.

Passive, long-lived structures and components that are the focus of the license renewal rule are also within the requirements of the maintenance rule, as discussed in the SOC Section III(d)(iv). Treatment of these structures and components, however, under the maintenance rule is likely to involve minimal preventive maintenance or monitoring to maintain functionality o'

HeinOnline -- 60 Fed. Reg. 22470 1995

such structures and components in the original operating period. Consequently, under the license renewal rule, the Commission did not allow for a generic exclusion of passive, long-lived structures and components based solely on maintenance activities associated with implementing the requirements of the maintenance rule. It also would be inappropriate to require that all licensees perform an aging management review required for license renewal when some licensees may not seek license renewal and do not intend to operate beyond the end of their current operating license. Furthermore, if aging issues are identified during the license renewal review that apply to the current operating term, licensees are required to take measures under their current license to ensure that the intended function of systems, structures, and components will be maintained in accordance with the CLB throughout the term of the current license. In addition, if aging issues are identified during the license renewal review that apply to the current operating term, the NRC will evaluate these issues for generic applicability as part of the regulatory process.

Therefore, the Commission believes that with the additional experience it has gained with age-related degradation reviews and with the implementation of the maintenance rule, there is a sufficient basis for concluding that current licensee programs and activities, along with the regulatory process, will be adequate to manage the effects of aging on the active functions of all systems, structures, and components within the scope of license renewal during the period of extended operation so that the CLB will be maintained. The bases for this conclusion are discussed further in the following sections.

(iv) Integration of the Regulatory Process and the Maintenance Rule With the License Renewal Rule

Because of the resultant insight and understanding that the NRC gained in developing the implementation guidance for the maintenance rule, the Commission is now in a position to more fully integrate the maintenance rule and the license renewal rule. Because the intent of the license renewal rule and the maintenance rule is similar (ensuring that the detrimental effects of aging on the functionality of important systems, structures, and components are effectively managed), the Commission has determined that the license renewal rule should credit existing maintenance activities and maintenance rule requirements for most structures and components. Recognition that licensee activities associated with the implementation of the maintenance rule will continue throughout the renewal period and are consistent with the first principle of license renewal is fundamental to establishing credit for the existing programs and the requirements of the maintenance rule. As a result, the requirements in this rule reflect a greater reliance on existing licensee programs that manage the detrimental effects of aging on functionality, including those activities implemented to meet the requirements of the maintenance rule.

Two commenters stated that it is inappropriate for the license renewal rule to rely on the maintenance rule implementation because 10 CFR 50.65 will not be in effect until July 10, 1996. The Commission disagrees with the commenters. As discussed in Section III.d. (ii) and (iii) of this SOC, the results of the Commission's MTIs indicate that licensees have adequate maintenance programs in place and have exhibited an improving trend in implementing them. Nuclear power plants have been performing a variety of maintenance activities since plants were initially constructed. The need for a maintenance rule arose primarily because the MTIs identified three common maintenance-related weaknesses (inadequate root-cause analysis, lack of equipment performance trending, and lack of appropriate consideration of plant risk in the prioritization, planning, and scheduling of maintenance). Additionally, the SOC for the maintenance rule (56 FR 31310) states that "[T]he focus of the rule is on the results achieved through maintenance, and, in this regard, it is not the intent of the rule that existing licensees necessarily develop new maintenance programs." Furthermore, as stated in Regulatory Guide 1.160, it is intended that activities currently being conducted by licensees, such as technical specification surveillance testing, can satisfy monitoring requirements. Such activities could be integrated with, and provide the basis for, the requisite level of monitoring. Finally, at the time of this rulemaking, nine licensees volunteered to participate in an NRC pilot inspection effort to review implementation of the maintenance rule. Five pilot inspections had been completed at nuclear power plants. The pilot inspections involved a step-by-step review of the implementation of the maintenance rule. In general, the pilot inspections found that licensees were able to utilize existing maintenance activities in complying with requirements of the maintenance rule. Therefore, for these reasons and as discussed in Section III.(d) of this SOC, the Commission continues to believe that there is a sufficient basis for concluding that current licensee programs and activities, along with the regulatory process, will be adequate to manage the effects of aging on the active functions of all systems, structures, and components within the scope of license renewal during the period of extended operation so that the CLB will be maintained.

In addition to the maintenance rule, the Commission has many individual requirements relative to maintenance throughout its regulations. These include 10 CFR 50.34(a)(3)(i); 50.34(a)(7); 50.34(b)(6) (i), (ii), (iii), and (iv); 50.34(b)(9); 50.34(f)(1) (i), (ii), (iii); 50.34(g); 50.34a(c); 50.36(a); 50.36(c) (2), (3), (5), and (7); 50.36a(a)(1); 50.49(b); 50.55a(g); Part 50, Appendix A, Criteria 1, 13, 18, 21, 32, 36, 37, 40, 43, 45, 46, 52, 53; and Part 50, Appendix B.

(v) Excluding Structures and Components With Active Functions

Performance and condition monitoring for systems, structures, and components typically involves functional verification, either directly or indirectly. Direct verification is practical for active functions such as pump flow, valve stroke time, or relay actuation where the parameter of concern (required function), including any design margins, can be directly measured or observed. For passive functions, the relationship between the measurable parameters and the required function is less directly verified. Passive functions, such as pressure boundary and structural integrity are generally verified indirectly, by confirmation of physical dimensions or component physical condition (e.g., piping structural integrity can be predicted based on measured wall thickness and condition of structural supports, but its seismic resistance capability cannot be verified by inspection alone). Although the requirements of the maintenance rule apply to systems, structures, and components that perform both active and passive functions, the Commission has determined that performance and condition-monitoring programs for structures and components that perform passive functions present limitations that should be considered in determining that structures and components can be generically excluded from an aging management review for license renewal.

On the basis of consideration of the effectiveness of existing programs which monitor the performance and condition of systems, structures, and components

HeinOnline -- 60 Fed. Reg. 22471 1995

that perform active functions, the Commission concludes that structures and components associated only with active functions can be generically excluded from a license renewal aging management review. Functional degradation resulting from the effects of aging on active functions is more readily determinable, and existing programs and requirements are expected to directly detect the effects of aging. Considerable experience has demonstrated the effectiveness of these programs and the performance-based requirements of the maintenance rule delineated in § 50.65 are expected to further enhance existing maintenance programs. For example, many licensee programs that ensure compliance with technical specifications are based on surveillance activities that monitor performance of systems, structures, and components that perform active functions. As a result of the continued applicability of existing programs and regulatory requirements, the Commission believes that active functions of systems, structures, and components will be reasonably assured in any period of extended operation. Further discussion and justification for excluding structures and components that perform active functions and are within the scope of the license renewal rule, but outside the scope of the maintenance rule, are presented in Section (vi).

One commenter argued that the Commission should not exclude active components because aging can be discontinuous, leading to catastrophic failures. Examples of catastrophic failures provided by the commenter included overstretching of metal, bending of beams, and embrittlement In their supplemental comments, NEI and Yankee Atomic Electric Company indicated that the use of the term "portions of" could be misinterpreted and lead to an unnecessary evaluation of all passive subcomponents of active structures and components.

The commenters appear to have misunderstood the Commission's intent with regard to "active" and "passive" functions. Passive parts of structures and components that only perform active functions do not require an aging management review. Structures and components that perform both passive and active functions require an aging management review for their intended passive function only. The exclusion regarding active components is focused on active functions rather than on an exclusion of the entire component. For example, diesel generators and air compressors (excluding structural supports) perform active functions and can be excluded from an aging management review. The examples given by the commenter for catastrophic failures are those related to "passive" intended functions (e.g., structural integrity, pressure boundary). It is the Commission's intent to include these "passive" functions in the license renewal review, irrespective of the components "active" function. For example, a safety system pump casing (i.e., pressure boundary function) would be required to be reviewed, while the pump (i.e., the active pumping function) would not. The Commission believes that considerable experience has demonstrated that its regulatory process, including the performance-based requirements of the maintenance rule, provide adequate assurance that degradation due to aging of structures and components that perform active functions will be appropriately managed to ensure their continued functionality during the period of extended operation. In addition, to address the NEI and Yankee Atomic Electric Company comments, the Commission has removed the words "portions of" and similar wording from the Statement of Considerations when it could be misinterpreted to mean a subcomponent piece-part demonstration.

A commenter argued that the Commission should not exclude from review manual valves that are rarely operated during the life of the plant, some of which are relied on as part of contingency actions in plant emergency operating procedures. The commenter argued that because these valves are rarely "officially" exercised, there is insufficient evidence that the active functions will be maintained in the renewal period. The Commission disagrees with the commenter's assertion that there is insufficient evidence that the active functions will be maintained in the renewal period. Such valves are within the scope of various regulatory programs, including the maintenance rule. Consequently, the ability of the valves to perform their intended function must be assured through either (1) effective preventive maintenance or (2) performance or condition monitoring.

(vi) Excluding Fire Protection Components With Active Functions

The scope of the maintenance rule does not generally include installed fire protection systems, structures, and components because performance and condition monitoring is required by § 50.48. Therefore, for the purposes of license renewal, installed structures and components that perform active functions can be generically excluded from an aging management review because they are either within the scope of § 50.65 or § 50.48. Compliance with § 50.48 is verified through the NRC inspection program.

The fire protection rule (§ 50.48) requires each nuclear power plant licensee to have in place a fire protection plan (FPP) that satisfies 10 CFR Part 50, Appendix A, Criterion 3 Licensees are required by § 50.48 to retain the FPP and each change to the plan until the Commission terminates the reactor license. The NRC reviews each licensee's total FPP as described in the licensee's safety analysis report (SAR), using basic review guidance described in § 50.48, as applicable to each plant.

The FPP establishes the fire protection policy for the protection of systems, structures, and components important to safety at each plant and the procedures, equipment, and personnel requirements necessary to implement the program at the plant site. The FPP is the integrated effort that involves systems, structures, and components, procedures, and personnel to carry out all activities of fire protection. The FPP includes system and facility design, fire prevention, fire detection, annunciation, confinement, suppression, administrative controls, fire brigade organization, inspection and maintenance, training, quality assurance, and testing.

The FPP is part of the CLB and contains maintenance and testing criteria that provide reasonable assurance that fire protection systems, structures, and components are capable of performing their intended function. The Commission concludes that it is appropriate to allow license renewal applicants to take credit for the FPP as an existing program that manages the detrimental effects of aging. The Commission concludes that installed fire protection components that perform active functions can be generically excluded from an aging management review on the basis of performance or condition-monitoring programs afforded by the FPP that are capable of detecting and subsequently mitigating the detrimental effects of aging.

(vii) Future Exclusion of Structures and Components on the Basis of NRC Requirements

As part of the ongoing regulatory process, the NRC evaluates emerging technical issues and, when warranted, establishes new or revised regulatory requirements as part of the resolution of a new technical issue, subject to the provisions of the backfit rule (§ 50.109). Increasing experience with aging

HeinOnline -- 60 Fed. Reg. 22472 1995

nuclear power plants has led to the imposition or consideration of additional requirements. For example, at this time the Commission is considering rulemaking activities associated with steam generator performance and containment inspections. For steam generators, the Commission is considering the need for a performance-based rule to address steam generator tube integrity. To address concerns regarding containments and liners, the Commission is considering amending § 50.55(a) to incorporate the most recent version of Subsections IWE and IWL in the American Society of Mechanical Engineers (ASME) Code, Section XI.

These new requirements, if implemented, would be relevant to both aging management and the structures and components subject to an aging management review for license renewal (i.e., passive, long-lived structures and components). As a result, as part of relevant future rulemakings, the Commission intends to evaluate whether these new requirements can be considered effective in continuing to manage the effects of aging through any renewal term. A positive conclusion could establish the bases for further limiting the license renewal review.

*e. Reaffirmation of Conclusions Concerning the Current Licensing Basis and Maintaining the Function of Systems, Structures, and Components*

(i) Current Licensing Basis

As defined in § 54.3 of the rule, the CLB is the set of NRC requirements applicable to a specific plant and a licensee's written commitments for ensuring compliance with and operation within applicable NRC requirements and the plant-specific design basis (including all modifications and additions to such commitments over the life of the license) that are docketed and are in effect. A detailed explanation of the CLB, the regulatory processes underlying the CLB, compliance with the CLB, and consideration of the CLB is contained in the SOC for the previous license renewal rule (56 FR 64949: December 13, 1991). In summary, the conclusions made in the SOC for the previous rule remain valid. The CLB represents the evolving set of requirements and commitments for a specific plant that are modified as necessary over the life of a plant to ensure continuation of an adequate level of safety. The regulatory process is the means by which the Commission continually assesses the adequacy of and compliance with the CLB. Compilation of the CLB is unnecessary to perform a license renewal review.

One commenter argued that the definition of CLB in § 54.3 should be clarified. Specifically, the commenter interprets that licensee written commitments made in docketed licensing correspondence such as responses to bulletins, generic letters, and enforcement actions and commitments in safety evaluations and licensee event reports (items in the third sentence of the definition) should be considered as part of the CLB only to the extent that these commitments reflect compliance with more formal requirements and regulations. These would include those elements of NRC requirements and regulations identified in the first two sentences of the definition. All other licensee commitments identified in those document types listed in the third sentence should not be considered CLB commitments if they are not otherwise necessary to demonstrate compliance with NRC requirements and regulations.

The Commission is aware of public concerns associated with the definition of CLB in § 54.3. Some of these concerns can be explicitly linked to what is meant by the term "written commitments" as it relates to the CLB. These concerns relate to ongoing consideration of the regulatory and licensee processes for defining, identifying, tracking, and validating licensee commitments. Although identified in the license renewal rulemaking process, many of these concerns are not directly associated with license renewal, but are relevant to current commitment management methods and practices. Therefore, the Commission is evaluating concerns associated with the definition of CLB in the context of currently operating reactors and may, in the future, determine that the definition of CLB needs to be clarified. Thus, the Commission concludes that, at this time, a revision to the definition of CLB is premature and will not be considered as part of this rulemaking.

In addition, the Commission concludes that, for the licensee renewal review, consideration of written commitments only need encompass those commitments that concern the capability of systems, structures, and components, identified in § 54.21(a), integrated plant assessment and § 54.21(c) time-limited aging analyses, to perform their intended functions, as delineated in § 54.4(b).

For the previous rule as well as for this rulemaking, commenters argued that the CLB of a number of plants is inadequate. Multiple examples of operational concerns and issues at specific plants were identified to demonstrate the inadequacy of the CLBs. One commenter stated that the Yankee Rowe reactor pressure vessel problem (the plant was removed from service rather than show compliance with its CLB for its reactor pressure vessel) demonstrates the inadequacy of CLBs. The commenter stated that "the Rowe experience demonstrated that examination of the licensing basis for extended operation could jeopardize the remaining years on the current license."

The Commission did not agree with the comments on the previous rule in this area and comments received for this rulemaking did not provide compelling reasons to alter the previous Commission determinations. The examples cited were all identified by the NRC through the inspection and oversight processes. The identification of these issues through the regulatory process demonstrates that the Commission's programs are effective in identifying and resolving new technical and safety issues and areas of noncompliance in a timely fashion. In each example provided by the commenters, appropriate corrective action was taken or is being taken on a plant-specific or on an industry-wide basis to either modify the CLB to resolve the concern or to ensure the continued compliance with the present CLB. The Commission agrees that the Yankee Rowe case demonstrated that the regulatory process can jeopardize current operation during license renewal activities. The decision to retire the Yankee Rowe plant was a utility economic decision when faced with the prospect of demonstrating continued compliance with its CLB. Non-compliance with the CLB, while not shown in the Rowe example, is one of the reasons that justifies the existence of the regulatory process.

Public Citizen stated that the Commission's contention that all reactors are in compliance with their CLBs is both arbitrary and capricious and neither stands the test of logic nor reality. The commenter continued by stating that the "NRC's assumption is based upon the specious argument that having operated without a meltdown for a finite period of time means that safety is adequate."

The Commission does not contend that all reactors are in full compliance with their respective CLBs on a continuous basis. Rather, as discussed in the SOC for the previous rule, the regulatory process provides reasonable assurance that there is compliance with the CLB. The NRC conducts its inspection and enforcement activities

HeinOnline -- 60 Fed. Reg. 22473 1995

under the presumption that non-compliances will occur.

The Commission does not believe that an absence of accidents over a given period of time equates to adequate safety. Neither does the Commission believe that all risk can be eliminated. Adequate safety is a subjective term that cannot be directly measured. The Commission's performance indicators demonstrate that, while not quantifiable, relative safety levels are increasing. An absence of accidents over a finite period of time can be considered as just one safety performance indicator. Despite improving performance indicators, the Commission intends to continue the meticulous process of insuring and maintaining an adequate level of protection.

Commenters for both the previous rule and for this rulemaking argued that the plant-specific CLB should be compiled and the NRC should verify compliance with the CLB as part of the license renewal process. Public Citizen stated that "The NRC must review the documents which make up the current licensing basis and examine the plant itself in order to determine whether the licensee has complied with the current licensing basis," and further, submission of the documents, and NRC verification of the licensee's compliance with its CLB is necessary to avoid "fraud and abuse." Public Citizen also contends that "[a]bsent the submission of the documents the public and the Commission are left to examine the reactor's license renewal application and the IPA in a vacuum."

The Commission disagrees with the commenter, and points out that the proposed rule did not explicitly require the renewal applicant to compile the CLB for its plant. The Commission rejected a compilation requirement for the previous license renewal rule for the reasons set forth in the accompanying SOC (56 FR at 64952). The Commission continues to believe that a prescriptive requirement to compile the CLB is not necessary. Furthermore, submission of documents for the entire CLB is not necessary for the Commission's review of the renewal application. As stated in section III.b(i) of this SOC, the Commission has determined that the single issue generic to all plants with regard to license renewal is the effects of age-related degradation during the period of extended operation. As explained in the SOC for the previous rule, section IV.c(i) (56 FR at 64948), the CLB of any plant is comprised of numerous regulations, license conditions, the design basis, etc. As discussed in III(e)(ii), "Maintaining the function of systems, structures, and components," the portion of the CLB that can be impacted by the detrimental effects of aging is the design basis. Thus, there is no compelling reason to consider, for license renewal, any portion of the CLB other than that which is associated with the structures and components of the plant (i.e., that part of the CLB that can suffer detrimental effects of aging). All other aspects of the CLB have continuing relevance in the license renewal period as they do in the original operating term, but without any association with an aging process that may cause invalidation. From a practical standpoint, an applicant must consult the CLB for a structure or component in order to perform an aging management review. The CLB for the structure or component of interest contains the information describing the functional requirements necessary to determine the presence of any aging degradation.

The definition of CLB in § 54.3(a) states that a plant's CLB consists, in part, of "a licensee's written commitments * * * that are docketed * * *" Because these documents have already been submitted to the NRC and are in the docket files for the plant, they are not only available to the NRC for use in the renewal review, they are also available for public inspection and copying in the Commission's public document rooms. Furthermore, the NRC may review any supporting documentation that it may wish to inspect or audit in connection with its renewal review. If the renewed license is granted, those documents continue to remain subject to NRC inspection and audit throughout the term of the renewed license. The Commission continues to believe that resubmission of the documents constituting the CLB is unnecessary. With respect to the commenter's argument that the CLB needs to be verified, the Commission had concluded when it adopted the previous license renewal rule that a reverification of CLB compliance as part of the renewal review was unnecessary (56 FR at 64951–52). Public Citizen presented no information questioning the continuing soundness of the Commission's rationale, and the Commission reaffirms its earlier conclusion that a special verification of CLB compliance in connection with the review of a license renewal application is unnecessary. The Commission intends, as stated by the commenter, to examine the plant-specific CLB as necessary to make a licensing decision on the continued functionality of systems, structures, and components subject to an aging management review and a license renewal evaluation. This activity will likely include examination of the plant itself to understand and verify licensee activities associated with aging management reviews and actions being taken to mitigate detrimental effects of aging.

After consideration of all comments concerning the compilation of the CLB, the Commission has reconfirmed its conclusion made for the previous rule that it is not necessary to compile, review, and submit a list of documents that comprise the CLB in order to perform a license renewal review

(ii) Maintaining the Function of Systems, Structures, and Components

As discussed in the SOC for the previous license renewal rule, the Commission stated that continued safe operation of a nuclear power plant requires that systems, structures, and components that perform or support safety functions continue to perform in accordance with the applicable requirements in the licensing basis. In addition, the Commission stated that the effects of ARDUTLR must be mitigated to ensure that the aged systems, structures, and components will adequately perform their designed safety or intended function.

In developing this final rule, a key issue that the Commission considered was whether or not a focus on ensuring a system's, structure's or component's function through performance or condition monitoring is a sufficient basis for concluding that the CLB will be maintained throughout the period of extended operation. The Commission considered whether the regulatory process and a focus on functionality during the license renewal review for the period of extended operation are sufficient to provide reasonable assurance that an acceptable level of safety (i.e., the CLB) will be maintained

Continued safe operation of a commercial nuclear power plant requires that systems, structures, and components that perform or support safety functions continue to function in accordance with the applicable requirements in the licensing basis of the plant and that others do not substantially increase the frequency of challenges to those required for safety As a plant ages, a variety of aging mechanisms are operative, including erosion, corrosion, wear, thermal and radiation embrittlement, microbiologically induced aging effects, creep, shrinkage, and possibly others yet to be identified or fully understood. However, the detrimental effects of aging mechanisms can be observed by detrimental changes in the performance

HeinOnline -- 60 Fed. Reg. 22474 1995

characteristics or condition of systems, structures, and components if they are properly monitored.

Aging can affect all systems, structures, and components to some degree. Generally, the changes resulting from detrimental aging effects are gradual. Licensees have ample opportunity to detect these degradations through performance and condition monitoring programs, technical specification surveillances required by § 50.36, and other licensee maintenance activities. Except for some well-understood aging mechanisms such as neutron embrittlement and intergranular stress corrosion cracking, the straightforward approach to detecting and mitigating the effects of aging begins with a process that verifies that the intended design functions of systems, structures, and components have not been compromised or degraded. Licensees are required by current regulations to develop and implement programs that ensure that conditions adverse to quality, including degraded system, structure, or component function, are promptly identified and corrected. The licensees' programs include self-inspection, maintenance, and technical specification surveillance programs that monitor and test the physical condition of plant systems, structures, and components.

For example, technical specifications include limiting conditions for operation (LCOs), which are the lowest functional capability or performance levels of equipment required for safe operation of the facility. Technical specifications also require surveillance requirements relating to test, calibration, or inspection to verify that the necessary quality of systems, structures, and components is maintained, that facility operation is within safety limits, and that LCOs continue to be met. Furthermore, § 50.55a requires, in part, that systems, structures, and components be tested and inspected against quality standards commensurate with the importance of the safety function to be performed, such as inservice testing (IST) and inservice inspections (ISIs) of pumps and valves.

Elements for timely mitigation of the effects of age-related degradation include activities that provide reasonable assurance that systems, structures, and components will perform their intended functions when called on. Through these programs, licensees identify the degradation of components resulting from a number of different environmental stressors as well as degradation from inadequate maintenance or errors caused by personnel. Once a detrimental performance or condition caused by aging or other factors is revealed, mitigating actions are taken to fully restore the condition to its original design basis. As a result of these programs, degradation due to aging mechanisms (detrimental aging effects) is currently being adequately managed, either directly or indirectly, for most systems, structures, and components.

Consequently, there is considerable logic in ensuring that the design basis (as defined in § 50.2) of systems, structures, and components is maintained through activities that ensure continued functionality. This process, including surveillance, is relied on in the current term to ensure continued operability, (i.e., to the greatest extent practicable, the intended design functions will be properly performed). The focus on maintaining functionality results in the continuing capability of systems, structures, and components, including supporting systems, structures, and components, to perform their intended functions as designed.

A key element of the 10 CFR 54 definition of the CLB is the plant-specific design-basis information defined in 10 CFR 50.2. According to this definition, "[d]esign bases means that information which identifies the specific functions to be performed by a structure, system, or component of a facility, and the specific values or ranges of values chosen for controlling parameters as reference bounds for design." In addition, design bases identify specific functions to be performed by a system, structure, and component, and design-basis values may be derived for achieving functional goals. For plant systems, structures, and components that are not subject to performance or condition-monitoring programs or for those on which the detrimental effects of aging may not be as readily apparent, verification of specific design values (e.g., piping wall thickness) or demonstration by analysis can be a basis for concluding that the required function(s) will be maintained in the period of extended operation.

When the design bases of systems, structures, and components can be confirmed either indirectly by inspection or directly by verification of functionality through test or operation, a reasonable conclusion can be drawn that the CLB is or will be maintained. This conclusion recognizes that the portion of the CLB that can be impacted by the detrimental effects of aging is limited to the design-bases aspects of the CLB. All other aspects of the CLB, e.g., quality assurance, physical protection (security), and radiation protection requirements, are not subject to physical aging processes that may cause noncompliance with those aspects of the CLB.

Although the definition of CLB in Part 54 is broad and encompasses various aspects of the NRC regulatory process (e.g., operation and design requirements), the Commission concludes that a specific focus on functionality is appropriate for performing the license renewal review Reasonable assurance that the function of important systems, structures, and components will be maintained throughout the renewal period, combined with the rule's stipulation that all aspects of a plant's CLB (e.g., technical specifications) and the NRC's regulatory process carry forward into the renewal period, are viewed as sufficient to conclude that the CLB (which represents an acceptable level of safety) will be maintained. Functional capability is the principal emphasis for much of the CLB and is the focus of the maintenance rule and other regulatory requirements to ensure that aging issues are appropriately managed in the current license term.

An example of performance verification activities that must be performed by licensees is the loss of coolant accident (LOCA)/loss of offsite power (LOOP) integrated tests. This technical specification surveillance is typically required to be performed at least once every 18 months. This test simulates a coincident LOCA/LOOP (design-basis accident) for each train or division of emergency alternating current (ac) power source (e.g., emergency diesel generators), the associated emergency core cooling systems (e.g., safety injection subsystems), and other electrically driven safety components (e.g., containment isolation valves, emergency ventilation/filtration components, and auxiliary feedwater components). All engineered safety features required to actuate for an actual LOCA/LOOP are required to actuate for the test and either duplicate the LOCA/LOOP function completely (e.g., electric loads are sequenced onto emergency busses, containment isolation valves actually shut from fully open positions) or approximate the actual function to the greatest extent practicable (e.g., safety injection pumps start and run in recirculation mode instead of actually injecting water into the reactor coolant system). Design-basis values that can only be measured during this testing, such as load sequence times and emergency bus voltage response to the sequenced loads, are directly verified

HeinOnline -- 60 Fed. Reg. 22475 1995

Between integrated tests, monthly and quarterly surveillances verify specific component performance criteria such as emergency diesel generator start times or pump flow values. The acceptance criteria stated in the surveillance requirements are derived from design-basis values with appropriate conservatisms built in to account for any uncertainties or measurement tolerances. Satisfactory accomplishment and periodic repetition of these types of surveillance provide reasonable assurance that system, structure, and component functions will be performed as designed.

*f. Integrated Plant Assessment*

The previous license renewal rule required license renewal applicants to perform a systematic screening of plant systems, structures, and components to ultimately determine if aging would be adequately managed in the period of extended operation. This IPA process would begin broadly and consider all plant systems, structures, and components. The IPA would then focus on only those that are important to license renewal and finally on only those structures and components that could be subject to ARDUTLR. For those structures and components subject to ARDUTLR, the IPA process required an evaluation and demonstration that either (1) new programs or licensee actions would be implemented to prevent or mitigate any ARDUTLR during the period of extended operation or (2) justifies that no actions are necessary.

On the basis of experience gained from implementation of the previous license renewal rule, the Commission determined that the previous rule required the evaluation of an unnecessarily large number of plant systems, structures, and components to establish appropriate aging management in the period of extended operation. This experience, further consideration of existing activities, and the recent adoption of the maintenance rule have led the Commission to conclude that many of these systems, structures, and components are already subject to activities that ensure their function through any period of extended operation. Therefore, the Commission is amending the IPA process in this rulemaking to more efficiently focus the license renewal review on certain structures and components for which the regulatory process and existing licensee programs and activities may not adequately manage the detrimental effects of aging in the period of extended operation.

The approach reflected in this rule maintains the requirement for each renewal applicant to address possible detrimental effects of aging for certain systems, structures and components during the period of extended operation through the IPA process. The rule will simplify the IPA process consistent with (1) the Commission's determination that the aging management review should focus on ensuring that structures and components perform their intended function(s) and (2) the additional experience the Commission has gained related to aging management review since publishing the current license renewal rule.

The IPA process continues to require an initial review of all plant systems, structures, and components to identify the scope of structures and components requiring aging management review for license renewal. The principal differences between the IPA process in the previous license renewal rule and the IPA process in this rule is—

(1) The determination of the reduced set of structures and components that must undergo an aging management review;

(2) The form of the aging management review (managing the effects of aging on functionality versus managing aging mechanisms); and

(3) The elimination of the term, "ARDUTLR"

(i) Determination of Structures and Components Requiring Aging Management Review for License Renewal

In the SOC for the previous license renewal rule, the Commission stated that, as it gains more experience with age-related degradation reviews, it may revisit the need for such a disciplined review process and may narrow the scope of the safety review. The Commission now believes that after reviewing its recent implementation experience, a narrower scope of review is warranted. The Commission concludes that a generic exclusion from aging management review is appropriate for those categories of structures and components subject to existing programs and activities that the Commission believes are sufficient to provide reasonable assurance of continued function in the period of extended operation.

As discussed in Section III.d of this SOC, the Commission has determined that the existing regulatory process, existing licensee programs and activities, and the maintenance rule provide the basis for generically excluding structures and components that perform active functions from an aging management review. However, the Commission does not believe that it can generically exclude structures and components that—

(1) Do not have performance and condition characteristics that are as readily monitorable as active components; and

(2) Are not subject to periodic, planned replacement.

Unlike the extensive experience associated with the performance and condition monitoring of the active functions of structures and components, little experience has been gained from the evaluation of long-term effects of aging on the passive functions of structures and components. The Commission considers that the detrimental effects of aging affecting passive functions of structures and components are less apparent than the detrimental effects of aging affecting the active functions of structures and components. Therefore, the Commission concludes that a generic exclusion for passive structures and components is inappropriate at this time. The Commission also concludes that an aging management review of the passive functions of structures and components is warranted to provide the reasonable assurance that their intended functions are adequately maintained during the period of extended operation. Additional experience with managing the effects of aging on the function of these structures and components may narrow the selection of structures and components requiring an aging management review for license renewal in the future.

New Jersey commented that since so much of original plant design assumed 40 years of service, utilities should be required to determine the actual conditions of systems, structures, and components at the 40-year point "license renewal milestone."

The focus of the license renewal rule on passive, long-lived structures and components conforms to the commenter's concern. For a licensee to perform an effective aging management review of long-lived, passive structures and components identified in the IPA, a logical starting point for a given structure or component may be to assess its current condition against the CLB via a "one time" inspection. Although this assessment is not specifically required by the rule, the licensee must demonstrate that the effects of aging will be managed so that the intended function(s) will be maintained for the period of extended operation. If a licensee chooses not to perform a "one time" inspection or similar assessment for a particular structure or component

HeinOnline -- 60 Fed. Reg. 22476 1995

the aging management review must still adequately demonstrate that detrimental effects of aging will be managed during the period of extended operation.

(a) "Passive" Structures and Components

In Section III.d of this SOC, the Commission concluded that structures and components that perform active functions can be generically excluded from an aging management review on the basis of performance or condition-monitoring programs. The Commission recognizes that structures and components that have passive functions generally do not have performance and condition characteristics that are as readily monitorable as those that perform active functions. Therefore, the Commission concludes that an aging management review is required for structures and components within the scope of the license renewal rule that perform passive intended functions.

The Commission has reviewed several industry concepts of "passive" structures and components and has determined that they do not accurately describe the structures and components that should be subject to an aging management review for license renewal. Accordingly, the Commission has developed a description of "passive" characteristics of structures and components. Furthermore, the Commission has directly incorporated these characteristics into the IPA process to avoid the creation of a new term, "passive." This SOC uses the term "passive" for convenience. Furthermore, the description of "passive" structures and components incorporated into § 54.21(a) should be used only in connection with the IPA review in the license renewal process.

The Commission has determined that passive structures and components for which aging degradation is not readily monitored are those that perform an intended function without moving parts or without a change in configuration or properties. For example, a pump or valve has moving parts, an electrical relay can change its configuration, and a battery changes its electrolyte properties when discharging. Therefore, the performance or condition of these components is readily monitored and would not be captured by this description. Further, the Commission has concluded that "a change in configuration or properties" should be interpreted to include "a change in state," which is a term sometimes found in the literature relating to "passive." For example, a transistor can "change its state" and therefore would not be screened in under this description.

Structures or components may have active functions, passive functions, or both. For example, although a pump or a valve has some moving parts, a pump casing or valve body performs a pressure-retaining function without moving parts. A pump casing or a valve body meets the Commission's description and would therefore be considered for an aging management review. However, the moving parts of the pump, such as the pump impeller, would not be subject to aging management review. Additionally, the maintenance rule implementation guidance (Regulatory Guide 1.160) contains a provision by which licensees may classify certain systems, structures, and components (e.g., raceways, tanks, and structures) as, "inherently reliable." Inherently reliable systems, structures, and components by definition generally do not require any continuing maintenance actions and should be considered as "passive."

As examples of the implementation of this screening requirement, the Commission considers structures and components meeting the passive description as including, but not limited to, the reactor vessel, the reactor coolant system pressure boundary, steam generators, the pressurizer, piping, pump casings, valve bodies, the core shroud, component supports, pressure retaining boundaries, heat exchangers, ventilation ducts, the containment, the containment liner, electrical and mechanical penetrations, equipment hatches, seismic Category I structures, electrical cables and connections, cable trays, and electrical cabinets.

Additionally, the Commission determined that structures and components that perform active functions are not subject to an aging management review (e.g., pumps (except casing), valves (except body), motors, diesel generators, air compressors, snubbers, the control rod drive, ventilation dampers, pressure transmitters, pressure indicators, water level indicators, switchgears, cooling fans, transistors, batteries, breakers, relays, switches, power inverters, circuit boards, battery chargers, and power supplies). However, pressure-retaining boundaries (e.g., pump casings, valve bodies, fluid system piping) and structural supports (e.g., diesel generator structural supports) that are necessary for the structure or component to perform its intended function meet the description of passive, and will be subject to an aging management review.

A commenter requested clarification as to whether the Commission intended pressure boundaries, other than the reactor coolant pressure boundary, to be included in an aging management review (e.g., pressurized water reactor main steam lines). The Commission does not limit the consideration of pressure boundaries for an aging management review to only the reactor coolant pressure boundary All pressure retaining boundaries necessary for the performance of the intended functions delineated in § 54.4 would be subject to an aging management review For example, those portions of a plant's main steam lines that meet the intended function criteria of § 54.4 would be included in an aging management review

One commenter expressed a belief that cables were prematurely included as "passive" and should not be subject to an aging management review The commenter stated that the only aging effects of cables are shorting and loss of continuity, and for cables not in a harsh environment, these effects would be immediately detected during normal operation or functional testing. The Commission considers the examples of electrical components (e.g., electrical cables, connections, and electrical penetrations) listed in 10 CFR 54.21(a)(1)(i) and Section III.f(i)(a) of the SOC to be properly categorized as "passive" because they perform their intended function without moving parts or without a change in configuration or properties and the effects of aging degradation for these components are not readily monitorable. The Commission also believes that this categorization is not premature as stated by the commenter

The Commission disagrees with the commenter's assertion that the aging effects of cable make it easy to monitor functional degradation. Although there have been significant advances in this area, there is no single method or combination of methods that can provide the necessary information about the condition of electrical cable currently in service regarding the extent of aging degradation or remaining qualified life. Degradation due to aging of electrical cables caused by elevated temperature and radiation can cause embrittlement in the form of cracking of insulation and jacket materials. The cracks degrade the electrical properties of the insulation materials. The major concern is that failures of deteriorated cable systems (cables, connections, and penetrations) might be induced during accident conditions. Because these components are relied on to remain functional during and following design basis events (including conditions of normal operation) and there are currently no known effective methods

HeinOnline -- 60 Fed. Reg. 22477 1995

for continuous monitoring of cable systems, these examples of passive electrical components subject to an aging management review will remain in 10 CFR 54.21(a)(1)(i) and Section III f(i)(a) of the SOC.

(b) "Long-Lived" Structures and Components

The Commission recognizes that, as a general matter, the effects of aging on a structure or component are cumulative throughout its service life. One way to effectively mitigate these effects is to replace that structure or component, either (i) on a specified interval based upon the qualified life of the structure or component or (ii) periodically in accordance with a specified time period to prevent performance degradations leading to loss of intended function during the period of operation.

Where a structure or component is replaced based upon a qualified life (appropriately determined), it follows that the replaced structure or component will not experience detrimental effects of aging sufficient to preclude its intended function. This is because the purpose of qualification of the life of a structure or component is to determine the time period for which the intended function of that structure or component can be reasonably assured.

Where a structure or component is replaced periodically in accordance with a specified time period, the regulatory process will ensure that degraded performance of the structure or component experienced during the replacement interval will be adequately addressed and the established replacing interval will be appropriate. Thus, there is a high likelihood that the detrimental effects of aging will not accumulate during the subsequent period such that there is a loss of intended function.

In sum, a structure or component that is not replaced either (i) on a specified interval based upon the qualified life of the structure or component or (ii) periodically in accordance with a specified time period, is deemed by § 54.21(a)(1)(ii) of this rule to be "long-lived," and therefore subject to the § 54.21(a)(3) aging management review.

It is important to note, however, that the Commission has decided not to generically exclude passive structures and components that are replaced based on performance or condition from an aging management review. Absent the specific nature of the performance or condition replacement criteria and the fact that the Commission has determined that components with "passive" functions are not as readily monitorable as components with active functions, such generic exclusion is not appropriate. However, the Commission does not intend to preclude a license renewal applicant from providing site-specific justification in a license renewal application that a replacement program on the basis of performance or condition for a passive structure or component provides reasonable assurance that the intended function of the passive structure or component will be maintained in the period of extended operation.

A commenter recommended that the Commission exclude specific components from an aging management review if they have been replaced in the later years of the original license or if they are subject to routine testing. The Commission believes that one-time component replacements and replacements based on routine testing are essentially replacements based on performance or condition. Absent the specific nature of the performance or condition replacement criteria (e.g., routine testing program) it is not appropriate for the Commission to generically exclude all such replacement programs of passive structures and components. However, the Commission does not preclude a license renewal applicant from providing a plant-specific justification in a license renewal application that a one-time replacement program or replacement program on the basis of routine testing of passive structures and components provides reasonable assurance that functionality will be maintained in the period of extended operation.

A commenter requested that the Commission provide an example of a performance- or condition-based replacement program that could be used to justify that aging effects will be adequately managed during the period of extended operation. While an exact application of a performance or condition replacement is necessarily dependent on plant-specific situations and their respective aging effects of concern, the Commission would generally expect that such a replacement program would have defined performance or condition measuring methods (e.g., wall thickness of heat exchanger tubes), an established monitoring frequency that supports timely discovery of degraded conditions (e.g., every refueling outage), and an appropriate replacement criterion (e.g., upon reaching a specified number of tubes plugged).

One commenter stated that the Commission should consider dividing long-lived passive structures and components into two categories: those that have a less rigorous approach to oversight and maintenance and those that have a sufficiently high level of licensee programs and regulatory oversight. The commenter then suggests that the rule should recognize the quality and effectiveness of the programs in the second category and appropriately credit them relative to an aging management review. Specifically, the commenter provided the reactor coolant pressure boundary as an example of a passive, long-lived component for which rigorous programs and regulatory oversight currently exist to adequately manage the effects of aging. Currently, the Commission believes it would be too difficult to further divide the structures and components required for an aging management review into those passive, long-lived structures and components "rigorously" managed and those "not as rigorously" managed. The variations among plant specific designs and programs make such a determination unmanageable at present. However, as the Commission gains more experience with industry activities for management of passive, long-lived structures and components, it may consider further narrowing the scope of those structures and components requiring an aging management review. With regard to the commenter's specific example of the reactor coolant pressure boundary, because of its high-risk significance, the differences in plant-specific design and operational histories, and the lack of operating experience beyond the original operating terms, the Commission does not believe it appropriate to generically exclude the reactor coolant pressure boundary from an aging management review.

(ii) The IPA Process

The Commission revised and simplified the IPA requirements (§ 54.21(a)) as follows:

First, instead of listing those systems, structures, and components that are important to license renewal, only a list is required (from those systems, structures, and components within the scope of license renewal) of structures and components that a licensee determines to be subject to an aging management review for the period of extended operation. A licensee has the flexibility to determine the set of structures and components for which an aging management review is performed, provided that this set encompasses the structures and components for which the Commission has determined an aging management review is required for the period of extended operation.

HeinOnline -- 60 Fed. Reg. 22478 1995

Therefore, a licensee's aging management review must include structures and components—

(1) That were not subject to replacement based on a qualified life or a specified time period; and

(2) That perform an intended function (§ 54.4) without moving parts or without a change in configuration or properties.

In establishing this flexibility, the Commission recognizes that licensees may find it preferable to not take maximum advantage of the Commission's generic conclusion regarding structures and components that do not require an aging management review, and may undertake a broader scope of review than is minimally required. For example, a licensee may desire to review all "passive" structures and components. This set of structures and components would be acceptable because it includes "long-lived" as well as periodically replaced structures and components and, therefore, encompasses all structures and components that would be identified through criteria (1) and (2) above.

Second, the IPA must contain a description of the methodology used to determine those systems, structures, and components within the scope of license renewal and those structures and components subject to an aging management review.

Third, the IPA must contain a demonstration, for each structure and component subject to an aging management review, that the effects of aging will be managed so that the intended function(s) will be maintained for the period of extended operation. This demonstration must include a description of activities, as well as any changes to the CLB and plant modifications that are relied on to demonstrate that the intended function(s) will be adequately maintained despite the effects of aging in the period of extended operation.

A commenter suggested that the regulatory text include a more comprehensive list of components subject to an aging management review in order to clarify its intent. The Commission decided that not to include a more detailed list of components subject to an aging management review. Components subject to an aging management review are highly plant specific and the Commission does not intend to establish plant-specific lists by regulation. However, the Commission will include additional clarification and examples of components requiring an aging management review in its implementation guidance for the rule.

DOE commented that the wording in § 54.21(a)(3), requiring a demonstration that the effects of aging will be managed so that the intended function(s) will be maintained, could be interpreted too restrictively. Specifically, DOE asserts that the IPA process serves to demonstrate that a structure or component will perform in a manner consistent with the CLB rather than to provide "absolute" assurance that the structure or component will not fail. Therefore, DOE recommends revising § 54.21(a)(3) to include requiring a demonstration that the effects of aging are "adequately managed" and that the intended functions are maintained, "to the extent required by the CLB."

The Commission agrees with DOE that the IPA process is not intended to demonstrate absolute assurance that structures or components will not fail, but rather that there is reasonable assurance that they will perform such that the intended functions, as delineated in § 54.4, are maintained consistent with the CLB. The Commission has clarified the wording in § 54.21(a)(3) to require a demonstration that the effects of aging be adequately managed so that the intended function(s) will be maintained consistent with the CLB.

One commenter suggested that the amendment provides more uncertainty as to which structures and components should be considered for an aging management review. Specifically, the commenter cited fasteners as an example of what is important but appears not to be considered in the proposed rule. The commenter states that the NRC should provide more detailed guidance.

The Commission does not agree that the rule provides more uncertainty with regard to what structures and components should be considered. In fact, the rule provides clear criteria for what types of structures and components must be subject to an aging management review—namely passive, long-lived structures and components from those determined to be within the scope of license renewal. With regard to the specific example of fasteners cited by the commenter, the rule would require an aging management review for fasteners because fasteners are considered to be passive and if the fasteners (1) were determined to be within the scope of license renewal as defined in § 54.4 and (2) were determined not to be subject to periodic replacement or replacement based on a qualified fastener life. As in the previous rule, this rule does not delineate a comprehensive list of the specific structures and components that must be considered for an aging management review.

*g. Time-Limited Aging Analyses and Exemptions*

(i) Time-Limited Aging Analyses

The definition of ARDUTLR in the previous license renewal rule requires a licensee evaluation and NRC approval of previous time-limited aging analyses for systems, structures, and components within the scope of license renewal that either were based on an assumed service life or a period of operation defined by the original license term. For example, certain plant-specific safety analyses may have been based on an explicitly assumed 40-year plant life (e.g., aspects of the reactor vessel design). As a result, an evaluation for license renewal would be required. Those time-limited aging analyses that need to be evaluated for renewal are limited to those analyses with (i) time-related assumptions, (ii) utilized in determining the acceptability of systems, structures, and components within the scope of license renewal (as defined in Section 54.4), (iii) which are based upon a period of plant operation equal to or greater than the current license term, but less than the cumulative period of plant operation (*viz.*, the existing license term plus the period of extended operation requested in the renewal application). Time-limited aging analyses based on an assumed period of plant operation short of the current operating term should be addressed within the original license and need not be reviewed for license renewal.

Because the Commission deleted the term of ARDUTLR, this license renewal rule identifies these explicit time-limited analyses as issues that must be clearly addressed within the license renewal process. This rule explicitly requires that—

(1) Applicants perform an evaluation of time-limited aging issues relevant to systems, structures, and components within the scope of license renewal in the license renewal application; and

(2) The adequate resolution of time-limited aging analysis issues as part of the standards for issuance of a renewed license.

The time-limited provisions or analyses of concern are those that—

(1) Involve the effects of aging;

(2) Involve time-limited assumptions defined by the current operating term, for example, 40 years;

(3) Involve systems, structures, and components within the scope of license renewal;

(4) Involve conclusions or provide the basis for conclusions related to the

HeinOnline -- 60 Fed. Reg. 22479 1995

capability of the system, structure, and component to perform its intended functions;

(5) Were determined to be relevant by the licensee in making a safety determination; and

(6) Are contained or incorporated by reference in the CLB.

The applicant for license renewal will be required in the renewal application to—

(1) Justify that these analyses are valid for the period of extended operation;

(2) Extend the period of evaluation of the analyses such that they are valid for the period of extended operation, for example, 60 years; or

(3) Justify that the effects of aging will be adequately managed for the period of extended operation if an applicant cannot or chooses not to justify or extend an existing time-limited aging analysis.

The Commission considers analyses to be "relevant" if the analyses provided the basis for the licensee's safety determination and, in the absence of the analyses, the licensee may have reached a different safety conclusion. Time-limited aging analyses that need to be addressed in a license renewal evaluation are not necessarily those analyses that have been previously reviewed or approved by the Commission. The following examples illustrate time-limited aging analyses that need to be addressed and were not previously reviewed and approved by the Commission.

(1) The FSAR states that the design complies with a certain ASME Code requirement. A review of the ASME Code requirement reveals that a time-limited aging analysis is required. The actual calculation was performed by the licensee to meet code requirements. The specific calculation was not referenced in the FSAR and the NRC had not reviewed the calculation.

(2) In response to a generic letter, a licensee submitted a letter to the NRC committing to perform a time-limited aging analysis that would address the concern in the generic letter. The NRC had not documented a review of the licensee's response and had not reviewed the actual analysis.

The Commission expects that the number of time-limited aging analyses that need to be addressed in a license renewal evaluation is relatively small. Although the number and type will vary depending on the plant-specific CLB, these analyses could include reactor vessel neutron embrittlement (pressurized thermal shock, upper-shelf energy, surveillance program), concrete containment tendon prestress, metal fatigue, environmental qualification (EQ) of electrical equipment, metal corrosion allowance, inservice flaw growth analyses that demonstrate structural stability for 40 years, inservice local metal containment corrosion analyses, and high-energy line-break postulation based on fatigue cumulative usage factor.

Three issues were raised by five commenters relating to time-limited aging analyses in the proposed rule.

(1) The proposed rule contains a definition of time-limited aging analyses in § 54.3 which is further discussed in the proposed SOC. However, the proposed rule definition appeared to contain two criteria in defining time-limited aging analyses while the discussion in the proposed SOC appeared to contain six criteria. Three commenters indicated that there may be potential inconsistencies between the proposed rule definition and the proposed SOC. The commenters recommended various methods for incorporating the SOC language in the rule.

The proposed SOC discussion was intended to further clarify the criteria contained in the proposed rule definition. After reviewing the comments, the Commission has decided to replace the proposed definition of time-limited aging analyses in § 54.3 with the six criteria in the proposed SOC as recommended.

(2) One commenter recommended reconsideration of all proposed plant modifications which were not imposed by the Commission due to a cost-benefit analysis that had time-dependent factors. The commenter suggested that this should include any backfits which the Commission declined to impose, as well as potential plant modifications to reduce risk identified in programs such as the individual plant examination (IPE) and the individual plant examination of external events (IPEEE) for severe accident vulnerabilities.

The Commission does not regard such reconsideration to be necessary to provide reasonable assurance that there is no undue risk to the public health and safety for the period of extended operation of nuclear power plants.

As discussed in the SOC for the previous license renewal rule (56 FR 64943 at 64948), in NUREG–0933, A Prioritization of Generic Safety Issues, the NRC examined 249 generic safety issues (GSIs) that had been resolved through October 1990, in order to identify possible cases where consideration of the additional period of operation during the renewal term might have altered the NRC's regulatory decision not to undertake additional action. Of the 139 GSIs resolved through October 1990 that did not result in backfits, the Commission found that only 3 issues for which a reexamination of the backfit determination appeared to be prudent. In two instances, the reexamination confirmed the appropriateness of the no backfit conclusion for an additional 20 years of operation beyond the original 40-year license term. The third issue (GSI Item III.A.1.3 "Maintain Supply of Thyroid Blocking Agent") had been placed in the resolution process for reasons apart from license renewal. Thus, cost-benefit analyses of the resolved GSIs were relatively insensitive to consideration of the period of extended operation. The cost-benefit methodologies utilized in resolution of GSIs are the same as those used by the NRC in conjunction with the full gamut of regulatory actions involving nuclear power plants, including rulemaking and enforcement. Since the methodologies are the same, the Commission believes that the results of NUREG–0933 can be reasonably extrapolated to other regulatory assessments where backfits were not imposed on the basis of cost-benefit analyses limited to 40 years of operation. Furthermore, cost-benefit considerations simply do not come into play in backfit determinations involving adequate protection—except in selecting among different ways of achieving adequate protection, as is acknowledged in 10 CFR 50.109(a)(7). The IPE and IPEEE are licensees' studies to search for plant vulnerabilities to internal and external events. As such, the IPE and IPEEE are not intended to identify or address matters involving adequate protection and, to date, no such issues have been identified.

(3) Two commenters recommended clarifying that the requirement of time-limited aging analyses does not apply to a component that is replaced based on a qualified life less than the full original license term. The commenters cited the EQ of electrical equipment pursuant to § 50.49 as a specific example. This type of equipment is replaced during the current license term and will continue to be replaced during the renewal term based on its qualified life.

The Commission's intent for the requirement of time-limited aging analyses is to capture, for renewal review, certain plant-specific aging analyses that are explicitly based on the duration of the current operating license of the plant. The Commission's concern is that these aging analyses do not cover the period of extended operation. Unless these analyses are evaluated, the Commission does not have assurance that the systems, structures, and components addressed by these

HeinOnline -- 60 Fed. Reg. 22480 1995

analyses can perform their intended function(s) during the period of extended operation. The periodic replacement program discussed in the previous paragraph would ensure that the subject component can perform its intended function(s) during the period of extended operation. Thus, the Commission agrees with the commenters that components replaced based on qualified lives less than the duration of the current license term need not be addressed under time-limited aging analyses for renewal if the scheduled replacement continues to be performed in the period of extended operation. This is consistent with the definition of time-limited aging analyses in § 54.3.

(ii) Exemptions

The previous license renewal rule required that an applicant for license renewal provide a list of all plant-specific exemptions granted under 10 CFR 50.12. An evaluation that justifies the continuation of the exemptions for the renewal term must be provided for exemptions that were either granted on the basis of an assumed service life or a period of operation bounded by the original license term of the facility or otherwise related to systems, structures, or components subject to ARDUTLR.

With the deletion of the definition of ARDUTLR and the corresponding addition of a separate time-limited aging analysis requirement, the Commission has included this exemption review with the separate time-limited aging analysis requirement in § 54.21(c). This change is consistent with the Commission's intent to review exemptions based on time-limited aging analyses under the current rule.

Two commenters questioned the proposed requirement to list and evaluate all granted exemptions, including those that are no longer in effect. One commenter recommended that only exemptions in effect at the time of renewal application and continuing into the period of extended operation should be considered for renewal. Further, the other commenter indicated that requiring a listing of all exemptions is inconsistent with the removal of other lists currently required in 10 CFR 54, such as the list of systems, structures, and components important to license renewal, to provide applicants flexibility in developing suitable methodologies to implement the requirements of § 54.21. The Commission agrees with the commenters. Exemptions that have expired are no longer part of the CLB for that plant. Further, a requirement to list all exemptions in effect is unnecessary because the only exemptions of concern for license renewal are those that have time-limited aging analyses.

Thus, the Commission has revised § 54.21(c)(2) to require a listing of only those exemptions in effect at the time of renewal application that are based on time-limited aging analyses as defined in § 54.3.

The Commission will rely on explicit wordings in the granted exemptions to determine if an exemption is in effect at the time of renewal application. The Commission will not require an exemption to be considered for license renewal if the exemption was granted with an explicit expiration date that has passed prior to the renewal application. However, the Commission will require exemptions granted without explicit expiration dates to be considered for renewal. If an applicant believes that a certain exemption has expired and yet the supporting documentation does not have a clearly stated expiration date, the applicant should update its CLB prior to submitting its renewal application to clearly indicate that the exemption has expired.

*h. Standards for Issuance of a Renewed License and the Scope of Hearings*

Section 54.29 of the previous license renewal rule provided that the Commission may issue a renewed license if—

(a) Actions have been identified and have been or will be taken with respect to age-related degradation unique to license renewal of systems, structures, and components important to license renewal, such that there is reasonable assurance that the activities authorized by the renewed license will be conducted in accordance with the current licensing basis, and that any changes made to the plant's current licensing basis in order to comply with this paragraph are otherwise in accord with the Act and the Commission's regulations.

(b) Any applicable requirements of subpart A of 10 CFR Part 51 have been satisfied.

(c) Any matters raised under 10 CFR 2.758 have been addressed as required by that (section).

Issues that were material to the findings in § 54.29 of the previous rule, as well as matters approved by the Commission for hearing under § 2.758, were within the scope of a hearing on a renewed license. The previous license renewal rule modified § 2.758 to clarify that challenges to the license renewal rule in an adjudicatory hearing on a renewal application would be considered by the Commission only in the following limited circumstances:

(1) That there are special circumstances with respect to age-related degradation unique to license renewal or environmental protection so that application of either 10 CFR Part 54 or 10 CFR Part 51 would not serve the purpose for which these rules were intended; or

(2) Because of circumstances unique to the period of extended operation, there would be noncompliance with the plant's CLB or operation that is inimical to the public health and safety during the period of extended operation.

The intent of those provisions in the previous rule was to clarify that safety and environmental matters not unique to the period of extended operation would not be the subject of the renewal application or the subject of a hearing in a renewal proceeding absent specific Commission direction. Rather, issues that represent a current problem for operation would have been addressed in accordance with the Commission's regulatory process and procedures. Thus, under the previous rule, a member of the public who believed that a current problem exists with a license or a matter exists that is not adequately addressed by current NRC regulations would have either petitioned the NRC to take appropriate action under § 2.206, or petitioned the NRC to institute rulemaking to address the issue under § 2.802.

The Commission continues to believe that aging management of certain important systems, structures, and components during this period of extended operation should be the focus of a renewal proceeding and that issues concerning operation during the currently authorized term of operation should be addressed as part of the current license rather than deferred until a renewal review (which would not occur if the licensee chooses not to renew its operating license). However, in this final rule, the Commission has narrowed the scope of structures and components that will require an aging management review for the period of extended operation and identification and evaluation of time-limited aging analyses by the applicant. Accordingly, conforming changes in § 54.29 have been made to reflect the refocused renewal review. Specifically, § 54.29 has been revised to delete the term "age-related degradation unique to license renewal," and substitute the findings (required for consistency with the revised § 54.21 (a)(3) and (c)) with respect to aging management review and time-limited aging analyses evaluation for the period of extended operation. Furthermore, § 2.758 has similarly been revised to delete the terms "age-related

degradation unique to license renewal" and "unique to the requested term." The elimination of ARDUTLR requires elimination of the concept that the renewal review or hearing must be confined to aging issues that are "unique" to license renewal. Instead, limits on the scope of renewal review and hearing are based on careful review of the sufficiency of the NRC regulatory process to resolve issues not considered in renewal.

Section 54.29 of the proposed rule (59 FR 46579) was intended to accomplish several things. Proposed § 54.29(a) was intended to define the findings that the Commission must make in order to issue a renewed operating license to a nuclear power plant and the scope of any hearing on the renewal application.[2] By contrast, proposed § 54.29 (b) and (c) were intended to identify the issues that were NOT to be part of the renewal review and to re-emphasize the renewal applicant's obligation under its current operating license to address, in the context of that license, those aging matters identified in the course of its renewal review that may reasonably be expected to cause a loss of function for systems, structures, or components during the current term of operation. Both DOE and NEI commented that by combining these purposes into a single section, the proposed rule could be erroneously interpreted as requiring a general demonstration of compliance with the CLB as a prerequisite for issuing a renewed license. While the Commission believes that the proposed rule was sufficiently clear in distinguishing between the issues that must be addressed as part of the renewal review versus those which must be addressed in the context of the current license, the Commission has considered the comments of DOE and NEI as evidence that the language of the proposed rule could be further improved. Upon review of NEI's and DOE's proposals, the Commission has decided to adopt an approach similar to the DOE proposal, which narrows § 54.29 to the findings to be made for issuance of a renewed license, and describes in a new section, 54.30, the licensee's responsibilities for addressing safety matters under its current license, that are not within the scope of the renewal review. Separating the subjects into two different sections should minimize any possibility of misinterpreting the scope of the renewal review and finding.

Section 54.29(a) of the proposed rule set forth the three findings, in paragraphs (a)(1), (a)(2) and (a)(3), which the NRC must make in order to issue a renewed license. The first finding in paragraph (a)(1) was divided into two numbered paragraphs (1)(i) and (1)(ii). DOE commented that numbering the clauses could lead to an erroneous interpretation that two separate, parallel conditions must be met in order to make the first finding. To avoid the potential misinterpretation, DOE recommended a revised numbering scheme. The Commission agrees that separately numbering clauses (i) and (ii) in paragraph (a)(1) could lead to an erroneous interpretation that two parallel conditions must be met in order to make the finding in paragraph (a)(1). Therefore, the Commission has adopted an approach similar to the DOE proposal.

*i. Regulatory and Administrative Controls*

Certain regulatory and administrative controls in the previous license renewal rule were imposed to specify the circumstances and requirements necessary to make changes relating to the determination and management of ARDUTLR and the recordkeeping and reporting requirements relating to the renewal application. In view of the greater reliance on existing programs in the license renewal process, as discussed in Section III.d of this SOC, the Commission has determined that many of these requirements are no longer necessary. Therefore, the Commission has decreased the recordkeeping and reporting burden on the applicant for license renewal in the level of detail in the application, requirements for supplementing the FSAR, and in recordkeeping requirements.

The Commission seeks to ensure that, in general, only the information needed to make its safety determination is submitted to the NRC for license renewal review and that regulatory controls imposed by the license renewal rule are consistent with existing regulatory controls on similar information that may be developed by a licensee during the current operating term.

(i) Controls on Technical Information in an Application

In § 54.21, the previous license renewal rule requires that an application include a supplement to the FSAR that presents the information required by this section. This information included the IPA lists of systems, structures, and components, justification for assessment methods, and descriptions of programs to manage ARDUTLR.

The simplification of the IPA process (Section III.f of this SOC) and the clarification of the concept of ARDUTLR (Section III.b of this SOC) have resulted in a potential inconsistency regarding the treatment of information associated with the IPA. The Commission has determined that there is no need to include the entire IPA in an FSAR supplement because only the information associated with the IPA regarding the basis for determining that aging effects are managed during the period of extended operation requires the additional regulatory oversight afforded by placing the information in the FSAR. Therefore, only a summary description of the programs and activities for managing the effects of aging during the period of extended operation for those structures and components requiring an aging management review needs to be included in the FSAR supplement. The IPA methodology and the list of structures and components need not appear in an FSAR supplement, although this information will still be required in the application for license renewal.

The Commission has also eliminated § 54.21 (b) and (d) of the previous rule. These sections concern CLB changes associated with ARDUTLR and plant modifications necessary to ensure that ARDUTLR is adequately managed during the period of extended operation. This information is now required as part of § 54.21 (a)(3) and (c). Relevant information concerning changes to the CLB and plant modifications required to demonstrate that aging effects for systems, structures, and components requiring an aging management review for license renewal must be described in the application for license renewal (§ 54.21 (a)(3) and (c)). If a license renewal applicant or the Commission determines that CLB changes or plant modifications form the basis for an IPA conclusion regarding structures and components requiring an aging management review, then an appropriate description of the CLB change or plant modification must be included in the FSAR supplement. Subsequent changes are controlled by § 50.59.

Section 54.21(c) of the previous license renewal rule required that an applicant for license renewal submit (1) a list of all plant-specific exemptions granted pursuant to 10 CFR 50.12 and each relief granted pursuant to 10 CFR

[2] The scope of Commission review determines the scope of admissible contentions in a renewal hearing absent a Commission finding under 10 CFR 2.758.

HeinOnline -- 60 Fed. Reg. 22482 1995

50.55a and (2) an evaluation if the exemption or relief was related to a system, structure, or component that was subject to ARDUTLR or a time-limited function. These lists and evaluations were to be included in the supplement to the FSAR. At that time, the Commission determined that these requirements were necessary to make an independent assessment that all exemptions and reliefs had been evaluated as part of the license renewal process. The Commission determined that these requirements were important because they provided a summary of the instances in the licensing basis for the period of extended operation in which the staff determined that strict compliance with existing regulatory requirements is not needed to ensure that the public health and safety is adequately protected.

The Commission continues to believe that the rationale and basis for requiring the information to be submitted are still valid for exemptions. The Commission has relocated the requirement to list and evaluate certain exemptions to proposed § 54.21(c). Thus, these exemptions can, therefore, be considered a subset of time-limited aging issues.

Consistent with the Commission's rationale for including only a summary description of programs and activities in the FSAR supplement, the Commission concludes that only a summary description of the evaluation of time-limited aging analyses, including a summary of the bases for exemptions that are based on time-limited aging analyses, needs to be included in the FSAR supplement. The Commission concludes that no needs exist to establish additional requirements that place the list of exemptions or specific exemption evaluations into the FSAR supplement, although this information must still be contained in the application for license renewal.

A relief from Codes need not be evaluated as part of the license renewal process. A relief granted pursuant to 10 CFR 50.55a is specifically envisioned by the regulatory process. A relief expires after a specified time interval (not to exceed 10 years) and a licensee is required to rejustify the basis for the relief. At that time, the NRC performs another review and may or may not grant the relief. Because a relief is, in fact, an NRC-approved deviation from the Codes and subject to a periodic review, the Commission concludes that reliefs are adequately managed by the existing regulatory process and should not require an aging management review and potential rejustification for license renewal. Therefore, the Commission has deleted the requirement to list and evaluate reliefs from § 54.21(c).

In its comments, NEI noted that the requirement contained in § 54.22 of the proposed rule requiring justification for technical specifications changes that are necessary to manage the effects of aging in the period of extended operation be placed in the FSAR supplement is not generally consistent with current regulatory practices. NEI states that the basis for such technical specification changes only should be required to be documented in the bases section of the technical specifications. The Commission agrees with NEI concerning the requirement to include the justification for technical specifications in the FSAR supplement and has clarified the requirement in § 54.22 to be more consistent with § 50.36. Section 54.22 now states that the justification for changes or additions to the technical specifications must be contained in the license renewal application.

(ii) Conditions of Renewed License

Section 54.33 of the previous rule required that, upon renewal, a licensee maintain the programs and procedures, which would have been reviewed and approved by the NRC staff, for managing ARDUTLR. In addition, § 54.33 established requirements for making changes to previously approved programs and procedures to manage ARDUTLR consistent with the rule changes that delete the term "ARDUTLR."

Considering the proposed amendments associated with the elimination of the term "ARDUTLR," the rule requires programs and procedures to manage the effects of aging for certain systems, structures, and components. However, the Commission will not approve specific programs and procedures as envisioned by the previous license renewal rule (e.g., effective programs). The Commission will review programs and procedures described in the license renewal application and determine whether these programs and procedures provide reasonable assurance that the functionality of systems, structures, and components requiring review will be maintained in the period of extended operation. The license renewal review that would be conducted under this rule may consider all programs and activities to manage the effects of aging that ensure functionality for these systems, structures, and components. A summary description of the programs and activities for managing the effects of aging for the period of extended operation or evaluation of time-limited aging analyses, as appropriate, for these systems, structures, and components will be placed into the FSAR supplement. License conditions and limitations determined to be necessary as part of the license renewal review will continue to be required by the Commission in accordance with § 54.33(b).

The regulatory process will continue to ensure that proposed changes to programs and activities that may affect descriptions in the FSAR will receive adequate review by the licensee and, if appropriate, by the NRC. Therefore, the Commission has deleted the § 54.33(d) requirements for making changes to previously approved programs and procedures to manage ARDUTLR.

(iii) Additional Records and Recordkeeping Requirements

Section 54.37 of the previous rule required that the, § 50.71(e) required, periodic FSAR update:

(1) Include any systems, structures, and components newly identified as important to license renewal after the renewed license is issued;

(2) Identify and provide justification for any systems, structures, and components deleted from the list of systems, structures, and components important to license renewal; and

(3) Describe how ARDUTLR will be managed for those newly identified systems, structures, and components.

The Commission reviewed the requirements for updating the FSAR (§ 54.37(b)) and determined that the requirements needed to be modified. As discussed in Section III.i.(i) of this SOC, the requirement to list systems, structures, and components that are "important to license renewal" in the FSAR supplement that accompanies the renewal application has been deleted. Therefore, in order to be consistent with the controls on technical information discussed in Section III.i.(i), the Commission has revised the requirements for information to be included in the periodic FSAR supplement. For example, the previous requirement to identify and provide justification, in the periodic FSAR update, for any systems, structures, and components deleted from the aforementioned list is no longer necessary and has been deleted from the final rule. In addition, the previous rule's requirement to describe how ARDUTLR will be managed for those newly identified systems, structures and components has been modified. For newly identified systems, structures, and components that would have required either an aging management review or a time-limited aging analysis, the final rule requires that the licensee

HeinOnline -- 60 Fed. Reg. 22483 1995

describe in the periodic FSAR update how the effects of aging will be managed to ensure that the systems, structures, and components perform their intended function during the period of extended operation.

Two commenters indicated that the level of detail required by § 54.37(b) (a description of how the effects of aging will be managed in the period of extended operation) is greater than, and therefore inconsistent with, the level of detail required in the FSAR supplement required by § 54.21(d) (a summary description of the programs and activities necessary for managing the effects of aging). The Commission believes that it is important to note that the systems, structures, and components discussed in § 54.37(b) are those *newly identified* systems, structures, and components that would have been subject to an aging management review in the license renewal process. If identified as part of the license renewal process, information concerning the aging management for these structures and components would have been contained in the application for license renewal. During the license renewal process, the application and the FSAR supplement, together, provide the necessary information and administrative controls to evaluate and help ensure the efficacy of aging programs for these structures and components. After a renewed license is issued, the information in the FSAR supplement serves the dual purposes of (1) Assuring that the licensee has considered relevant technical information regarding the evaluation of aging effects for these newly identified systems, structures, and components and (2) establishing appropriate administrative and regulatory controls on the programs that manage aging for these newly identified systems, structures, and components. Therefore, the Commission concludes that the characterization of the level of detail required in the FSAR supplement for newly identified systems, structures, and components by § 54.37(b) is appropriate.

Section 54.37(c) of the previous rule required that a licensee do the following:

(1) Submit to the NRC at least annually a list of all changes made to programs for management of ARDUTLR that do not decrease the effectiveness of "effective" programs, with a summary of the justification and

(2) Maintain documentation for any changes to "effective" programs that are determined not to reduce the effectiveness of the program.

Under this rule, the Commission will review aspects of programs and procedures described in the license renewal application and determine whether these programs and procedures will provide reasonable assurance that the functionality of systems, structures, and components requiring review will be maintained in the period of extended operation. The license renewal review that would be conducted under this rule may consider all programs and activities that manage the effects of aging and ensure functionality for these certain systems, structures, and components. The existing regulatory process, existing licensee oversight activities, and the additional regulatory controls associated with placing a summary description of activities to manage the effects of aging into the FSAR are sufficient to ensure that changes to programs that could decrease the overall effectiveness of the programs to manage the effects of aging and the evaluation of time-limited aging analyses for the systems, structures, and components requiring license renewal review will receive appropriate review by the licensee. Therefore, the Commission has deleted § 54.37(c).

## IV. General Comments and Responses

(1) One commenter recommended that the NRC perform a full economic analysis for the period of extended operation. The commenter indicated that topics such as the expense involved in monitoring and/or replacing components, the increase in decommissioning costs as plants are operated longer and waste is accumulated, a comparison of the costs for operating the plant for the additional time versus the cost of other sources of power need to be addressed.

The economics of electrical power generation is the responsibility of the individual utility and the Federal or State agencies that are given that authority and responsibility. Generally, a State public utility commission or the Federal Energy Regulatory Commission, along with the utility, have the responsibility and the authority to address economic issues associated with power generation. Furthermore, the Commission's regulatory responsibility (as defined by the Atomic Energy Act, the NRC's organic statute) does not confer upon the Commission primary authority for regulating the economics of nuclear power generation. Under these circumstances, the Commission does not believe that it should perform economic analyses of nuclear power generation as a basis for informing the Commission's licensing decisions. While it is true that the Commission currently addresses the economics of operating a nuclear power plant in the context of an environmental impact statement (EIS), it should be recognized that these analyses have been conducted in the context of EISs as part of the Commission's process for complying with the mandates of the National Environmental Policy Act (NEPA). However, NEPA does not require such economic analyses. In a separate rulemaking (59 FR 37724) the Commission is considering whether the Commission's current analytical approach should be altered by moving away from economic analyses in EISs and redirecting the NEPA evaluation to focus on environmental impacts. In sum, the Commission is not statutorily required, and does not believe it is necessary, to perform economic analyses of extended operation of nuclear power plant licenses.

(2) NEI commented that an aging management review that involves an issue that is being addressed by the NRC as a GSI or an unresolved safety issue (USI) should not hold up the issuance of a renewed license pending the resolution of the issue.

Resolution of a USI or GSI generically for the set of applicable plants is not necessary for the issuance of a renewed license. GSIs and USIs that do not contain issues related to the license renewal aging management review or time-limited aging evaluation are *not* a subject of review or finding for license renewal. However, designation of an issue as a GSI or USI does not exclude the issue from the scope of the aging management review or time-limited aging evaluation.

For an issue that is both within the scope of the aging management review or time-limited aging evaluation *and* within the scope of a USI or GSI, there are several approaches which can be used to satisfy the finding required by section 54.29. If an applicable generic resolution has been achieved before issuance of a renewed license, implementation of that resolution could be incorporated within the renewal application. An applicant may choose to submit a technical rationale which demonstrates that the CLB will be maintained until some later point in time in the period of extended operation, at which point one or more reasonable options (e.g., replacement, analytical evaluation, or a surveillance/maintenance program) would be available to adequately manage the effects of aging. (An applicant would have to describe its basis for concluding that the CLB is maintained, in the license renewal application, and briefly describe options that are technically feasible during the period of extended

HeinOnline -- 60 Fed. Reg. 22484 1995

operation to manage the effects of aging, but would not have to preselect which option would be used.) Another approach could be for an applicant to develop an aging management program which, for that plant, incorporates a resolution to the aging effects issue.

Another option could be to propose to amend the CLB (as a separate action outside of the license renewal application) which, if approved, would revise the CLB such that the intended function is no longer within the CLB.

(3) Several commenters suggested that as plants age, the regulatory requirements need to be strengthened rather than relaxed. These commenters indicated that the proposed license renewal rule is a relaxation of the previous rule, serving only to provide incentives for applicants, rather than an enhancement to public safety.

The Commission does not agree that regulations must be strengthened simply because a plant ages. The Commission believes that additional regulations should be imposed when there is some reason to believe that current regulation are inadequate. The Commission's regulatory process continuously assesses the need for additional oversight and implements appropriate regulations to ensure public health and safety. Equally important, however, is the Commission's policy to ensure that its regulations promote a stable, efficient, and predictable regulatory environment. Therefore, where the Commission recognizes a more efficient and stable means of achieving a particular level of safety, it strives to implement that approach.

The Commission implemented a license renewal rule because existing regulations did not contain clear guidance on renewals and, further, the Commission believed that current regulations were inadequate to address the effects of aging in the period of extended operation. Upon implementation of the previous license renewal rule, however, the Commission determined that the rule could be amended to create a more efficient and stable license renewal process, while retaining the same degree of safety provided by the previous rule.

(4) Nevada commented that the Commission should be analyzing whether there was any condition, act, or practice that occurred during the period of initial licensing that would affect the period of extended operation. In a broad sense, the regulatory process continuously evaluates the safety status of licensed plants and modifies licensing bases as necessary to ensure that plant operation is not inimical to the public health and safety. As discussed in the SOC of the previous rule (56 FR at 64951), the Commission's inspection program obtains sufficient information on licensee performance, through direct observation and verification of licensee activities, to determine whether the facility is being operated safely and whether the licensee management control program is effective and to ascertain whether there is a reasonable assurance that the licensee is in compliance with regulatory requirements. Further, as discussed in the SOC for the previous rule (56 FR at 64947), the Commission has a program for the review of operating events at nuclear power plants. The total program offers a high degree of assurance that events that are potentially risk significant or precursors to significant events are being reviewed and resolved expeditiously. Response to events may result in minor followup inspection activities at a single plant up to generic safety improvements at all plants—regardless of license terms. Thus, the Commission continuously analyzes conditions, acts, and practices that could affect safe operation of plants and takes appropriate action.

(5) One commenter asked whether the original rules concerning emergency preparedness are still in effect, even though the proposed rule changes did not mention any revisions to emergency preparedness requirements. The Commission's response is; yes, the previous rules provisions on emergency preparedness are still in effect.

(6) One commenter stated that the rule should be written in language that the average, literate citizen can comprehend. The commenter further states that technical terms, or specialized phraseology whose purpose is to express a precise meaning, legal or otherwise, can and should be fully explained. The Commission agrees with the commenter to the extent that NRC documents should be written so that as many people as possible can comprehend them. The expectation is for all Commission documents to be written as clearly as possible so that they can be easily comprehended. The Commission has taken steps to clarify technical terms and phraseology in the final rule and SOC. For example: the phrase "age-related degradation unique to license renewal" was not well understood and not easily explained; in part because of this the Commission has removed this phrase from the rule.

(7) One commenter claimed that the Commission did not consult with either any environmental group or any members of the general public when the Commission was seeking advice during a public workshop on the proposed changes to the license renewal rule. Rather, the Commission relied solely on the expertise of representatives of nuclear utilities, industry organizations, architects and engineering firms, consultants and contractors, and Federal and State agencies.

The Commission disagrees. Consistent with the Commission's policy of seeking input from the entire spectrum of the public, the Commission provided ample opportunity for public comment. The Commission held a public workshop on September 30, 1993, to discuss alternative approaches to the license renewal rule. A notice of the public workshop was published in the **Federal Register** on August 12, 1993. In addition to the **Federal Register** notice, the NRC explicitly contacted four public interest groups that had previously indicated interest in license renewal. The NRC staff contacted representatives from the Union of Concerned Scientists, the Nuclear Information and Resource Service, the Natural Resources Defense Council, and the Public Citizen Litigation Group. Representatives from the Nuclear Information and Resource Service and the Public Citizen Litigation Group attended the workshop. Written comments from the Ohio Citizens for Responsible Energy, Inc. were also received. The proposed changes to the license renewal rule were published in the **Federal Register** on September 9, 1994, for public comment. Three public interest groups provided comments: the Public Citizen, the Ohio Citizens for Responsible Energy, Inc., and the Sierra Club. During the upcoming development of implementation guidance (a standard review plan for license renewal and a regulatory guide for license renewal), external NRC meetings will be open to the public and the draft standard review plan for license renewal and the draft regulatory guide for license renewal will be made available for public comment.

(8) NEI stated that 10 CFR 54.23 requires an "environmental report that complies with the requirements of 10 CFR Part 51." 10 CFR 51.53 requires a supplemental environmental report. The wording should be consistent between Parts 51 and 54. The Commission agrees and the Part 54 wording will be changed to be consistent with Part 51.

(9) Two commenters encouraged the creation of implementation guidance in the form of a regulatory guide and a standard review plan. The current NRC effort is focused on the completion of this license renewal rule and the review of the initial license renewal submittals. The NRC intends to develop and issue guidance in the future in the form of a regulatory guide and a standard review

HeinOnline -- 60 Fed. Reg. 22485 1995

plan, however, the guidance may not be issued prior to the NRC review of a number of submittals.

(10) One commenter suggested that the NRC should require an update of plant environs for parameters such as population density to assure that the original licensing basis is still valid prior to license renewal.

The Commission does not agree that a review of plant environs is necessary as a precondition for license renewal. Aside from such a review being beyond the scope of license renewal, the Commission's regulations in 10 CFR 50.71(e) require a licensee to ensure that the FSAR contains the latest and most accurate information. This requirement includes parameters on plant environs such as population density, which is normally contained in Chapter 2 of the FSAR.

**V. Public Response to Specific Questions**

In the Notice of Proposed Rule (59 FR at 46589), the Commission requested public comment on five specific questions. The Commission appreciates the public's comments on these five questions.

*Discussion.* An aging management review is required for a small subset of structures and components within the scope of license renewal. As described in Section III.f of this SOC, the Commission believes, on the basis of existing regulatory requirements and operating experience, that the aging management review can be limited to "passive," "long-lived" structures and components.

1. Should additional structures and components within the scope of license renewal be explicitly required to receive an aging management review?

2. If so, what would be the bases for requiring such additional structures and components to be subject to an aging management review?

Commenters responded to questions 1 and 2 by stating that additional structures and components not included in the proposed rule require an aging management review, no additional structures and components require an aging management review, and structures and components requiring an aging management review under the proposed rule should be excluded. The Commission has responded to the individual comments on requiring an aging management review for additional structures and components in Section III(d)(v) of this SOC. Comments stating that additional structures and components should be generically excluded from an aging management review are answered in response to question 3 in this Section.

*Discussion.* The IPA in the proposed amendment to the license renewal rule contains a process to narrow the focus of the aging management review to encompass those structures and components that are "long-lived" and "passive" (see § 54.21(a)(1) (i) and (ii)).

In SECY-94-140, the Commission considered the possibility that *redundant*, long-lived, passive structures and components could be generically excluded from an aging management review for license renewal. The basis for this consideration was that redundancy is one aspect of a defense-in-depth design philosophy that could provide reasonable assurance that certain single failures would not render systems, structures, or components incapable of performing their intended function(s). The staff reasoned that although simultaneous failures of redundant structures and components are hypothetically possible, the physical variables and the differences in operational and maintenance histories that will influence the incidence and rates of aging degradation between otherwise identical structures and components make simultaneous failures of redundant equipment unlikely. In addition, existing programs and requirements (i.e., maintenance rule and 10 CFR Part 50, Appendix B) would result in activities to determine the root causes for failures and mitigate future occurrences of them.

On further consideration, however, the Commission has recognized, because it cannot generically determine that all licensees have processes, programs, or procedures in place for the timely detection of degraded conditions as a result of aging during the period of extended operation for passive, long-lived structures and components, that the potential exists for reduced reliability and failure of *redundant*, long-lived, passive structures and components. If the condition of these structures and components were degraded below their CLB (i.e., design bases, including seismic design), without detection and corrective action, a failure of *redundant*, passive structures and components is possible given, for example, the occurrence of a design-basis seismic event, such that the system may not be able to perform its intended functions. Therefore, without readily monitorable performance and/or condition characteristics to reveal degradation that exceeds CLB levels (as in the case of passive, long-lived structures and components) the Commission believes it inappropriate to permit generic exclusion of *redundant*, long-lived, passive structures and components. If, however, an applicant, in the site-specific renewal application, can demonstrate that their facility has specific programs or processes in place to detect ongoing degradation such that failure of *redundant*, long-lived, passive structures and components is avoided, the Commission may be able to credit such programs and allow *redundant*, long-lived, passive structures and components to be generically excluded from further aging management review.

3. Is there additional information for the Commission to consider that would satisfy the Commission's concern relative to the detection of degradation in *redundant*, long-lived, passive structures and components such that failures that might result in loss of system function are unlikely, and to warrant a generic exclusion?

One commenter stated that "built in" redundancy is an essential safety feature and suggested that redundant, passive, long-lived structures and components should not be excluded from an aging management review.

Industry commenters, on the other hand, attempted to provide sufficient justification for generically excluding from an aging management review those components whose failure will not result in a loss of system function. The industry divided these components into two categories: (1) redundant components and (2) small components that can be isolated, such as instrument lines. The industry believes that passive, long-lived components that have designed redundancy are subject to extensive licensee programs that verify structural integrity and functional capability. These extensive programs, together with the established redundancy, ensure that the effects of aging will be detected so that corrective action can be taken before a loss of the system's intended function. The industry believes that the stringent seismic design requirements coupled with current plant programs provides greater assurance that structural integrity and capability of passive components will be maintained during an earthquake. Moreover, the industry believes that the slow, long-term characteristics of the aging process and the fact that this aging process is not occurring at an identical rate in redundant trains, allows degraded conditions to become self-revealing before a loss of the intended system function.

As discussed in the proposed rule amendment, the Commission concluded that passive, long-lived components should be subject to an aging management review because, in general,

HeinOnline -- 60 Fed. Reg. 22486 1995

functional degradation of these components is not as readily revealable so that the regulatory process and existing licensee programs may not adequately manage the detrimental effects of aging in the period of extended operation. In their comments on the proposed rule amendment, the industry provided some examples of how aging effects of certain passive structures and components could be considered by the Commission to be adequately managed during the period of extended operation. However, the basis for the aging management programs described in the examples relies on individual licensee programs rather than on design redundancy.

While the industry examples may be a basis for determining that aging of a structure or component is adequately managed in a plant-specific application, a generic determination of acceptability is difficult given the variations among plant designs and programs. However, as the NRC gains more experience with the effects of aging during the period of extended operation and can better define the boundary of adequate aging management for passive, long-lived structures and components, the Commission may consider further narrowing the scope of passive, long-lived structures and components requiring an aging management review.

Additionally, the industry did not adequately address the Commission's concern relative to aging degradation below design bases occurring simultaneously in redundant trains such that an initiating event (e.g., a seismic event) may lead to failure of the intended system function. The industry's argument that aging will not occur at identical rates and that a failure in one redundant train will lead to investigative and corrective actions before the remaining component fails, is not compelling. Absent more detailed information, the Commission cannot preclude the possibility of common mode failures of redundant, passive structures and components. Further, the Commission believes that crediting a regulatory requirement (i.e., redundancy) as a surrogate for an aging management program to ensure a system's intended function exploits the Commission's defense-in-depth philosophy. In addition, this argument is circular because the established redundancy would, in essence, be used to assure continued redundancy in the period of extended operation.

The industry also proposed that the Commission generically exclude from an aging management review certain portions of systems whose failure can either be isolated or whose failure will not result in the loss of the associated system's intended function. The industry cites small instrument lines and sensors that can be isolated (i.e., manual isolation by operator action) as examples of components that could be excluded from an aging management review using these criteria.

The Commission cannot generically exclude these components from consideration for an aging management review for several reasons. The Commission does not deem it appropriate to generically credit operator action (e.g., manual component isolation), exclusively as adequate aging management for portions of systems that would otherwise require an aging management review. Such an exclusion necessarily presumes that manual valve isolation would occur—a presumption the Commission cannot make. In addition, all "passive", "long-lived" portions of systems that perform an intended function as specified in § 54.4(b) require an aging management review. Instrument lines, for example, typically are "passive", "long-lived" and form part of a system's pressure boundary. The Commission cannot generically exclude these portions of systems from an aging management review because failure of these portions of systems *may* result in the loss of the system's intended function (e.g., required instrumentation, pressure boundary, flowrate). Therefore, an applicant for license renewal will be required to perform an aging management review for these portions of systems. However, an applicant for license renewal may perform, or may have performed, additional plant-specific analyses that adequately demonstrate that failure of these non-redundant portions of systems *will not* result in the loss of any of the associated systems' intended functions. In this case, these plant-specific analyses could provide the basis for a license renewal applicant to conclude that these non-redundant portions of systems do not meet the functional scoping criteria of § 54.4(b) and, therefore, are not subject to an aging management review

*Discussion.* The Commission concluded in the SOC for the current license renewal rule (56 FR 64963; December 13, 1991) that 20 years of operational and regulatory experience provides a licensee with substantial amounts of information and would disclose any plant-specific concerns with regard to age-related degradation. In addition, a license renewal decision with approximately 20 years remaining on the operating license would be reasonable considering the estimated time necessary for utilities to plan for replacement of retired nuclear power plants. One utility has recently indicated that decisions regarding license renewal made earlier in the current license term may create substantial current-day economic advantages while still providing sufficient plant-specific history. This utility suggested that the earliest date for filing a license renewal application be changed so that a license renewal application can be submitted earlier than 20 years before expiration of the existing operating license. The term of the renewed license would still be limited to 40 years.

4. Is there a sufficient plant-specific history before 20 years of operation as specified in the current rule that provides reasonable assurance that aging concerns would be identified? If not, can reliance on industry-wide experience be used as a basis for considering an application for license renewal before 20 years of operation? What should be the earliest time an applicant can apply for a renewed license?

The NRC received six responses to the question. Four of the six commenters opposed consideration of license renewal applications prior to 20 years of operation. These comments included arguments such as:

(1) Early applications may not allow for the effects of deterioration due to aging to appear in sufficient diversity or intensity for management to acquire a full range of experience in dealing with these problems;

(2) Licensees might apply for renewal over a shorter period before the effects of aging are apparent;

(3) Early applications could negatively impact the review schedule for older plants; and

(4) There is a lack of experience with the maintenance rule. One of these commenters suggested the possibility of approving a license renewal contingent on imposing certain special testing requirements during the final years of the original license term to ensure that substantial physical degradation of passive, long-lived safety-related equipment had not occurred. NEI, while not specifically favoring a rule change allowing early applications, stated that depending on the individual plant and its operating history, there may be sufficient operating history available to provide reasonable assurance that aging concerns can be identified and, therefore, an applicant may request an exemption. One commenter (DOE) was in favor of a rule change allowing an early application. DOE stated that, in general, aging effects are apparent after only a few years of operation and that

HeinOnline -- 60 Fed. Reg. 22487 1995

industry-wide data provides a sound basis to understand and address the effects of aging, even at a plant that has operated only a few years. DOE foresees no technical impediment to license renewal prior to 20 years of operation.

Based on the general nature of the information provided by the commenters, no change to the final rule will be made. The Commission is willing to consider, however, plant-specific exemption requests by those applicants who believe that they may have sufficient information available to justify applying for a renewal license prior to 20 years from the expiration date of the current license.

5. What additional safety, environmental, or economic benefits or concerns, if any, would result from a decision about license renewal made before the 20th year of current plant operation?

The NRC received two responses to this question. NEI felt that a significant economic benefit would likely be derived from license renewal decisions made before the 20th year of operation. However, they stated that the industry cannot estimate the exact benefit because it is likely to vary considerably from plant to plant. NEI also stated that it is clear that knowledge gained from license renewal will enhance the utility's ability to engage in long-range planning and may enable the utility to modify its electrical rates accordingly. DOE added that they were unaware of any safety or environmental concerns that would result from a license renewal decision before the 20th year of operation, other than those issues that would be considered for any license renewal.

No new specific information concerning additional safety, environmental, or economic benefits of license renewal applications before the 20th year was provided by any commenters. Therefore, the Commission has determined not to change Section 54.17.

## VI. Availability of Documents

Copies of all documents cited in the Supplementary Information section are available for inspection and/or for reproduction for a fee in the NRC Public Document Room, 2120 L Street N.W. (Lower Level), Washington, DC 20555.

In addition, copies of NUREGs cited in this document may be purchased from the Superintendent of Documents, U.S. Government Printing Office, Mail Stop SSOP, Washington, DC 20402–9328. Copies are also available for purchase from the National Technical Information Service, 5285 Port Royal Road, Springfield, VA 22161.

## VII. Finding of No Significant Environmental Impact: Availability

The NRC prepared a draft environmental assessment (EA) for the proposed rule pursuant to the National Environmental Policy Act of 1969 (NEPA), as amended; the regulations issued by the Council on Environmental Quality (40 CFR 1500–1508), and the NRC's regulations (Subpart A of 10 CFR 51). Under NEPA and the NRC's regulations, the Commission must consider, as an integral part of its decisionmaking process on the proposed action, the expected environmental impacts of promulgating the proposed rule and the reasonable alternatives to the action. The NRC concluded that promulgation of the proposed rule would not significantly affect the environment and, therefore, a full environmental impact statement would not be required and a finding of no significant impact (FONSI) could be made. The basis for these conclusions and the finding are summarized below

The NRC previously assessed the environmental impacts from promulgation of a license renewal rule in NUREG–1398, "Environmental Assessment for the Final Rule on Nuclear Power Plant License Renewal." In this assessment, the NRC concluded that the promulgation of 10 CFR 54 will have no significant impact on the environment. With this assessment as a baseline, the NRC's approach for assessing the environmental impact of the proposed rule centered on analyzing any differences in the expected rule-related actions from the previous rule compared to those under the proposed rule.

The requirements for a renewed license under both the previous rule and the proposed rule are similar. Both approaches could result in the operation of plants up to 20 years beyond the expiration of the initial license. An emphasis would be placed on certain systems, structures, and components undergoing a specific aging management review to provide assurance that the effects of aging are adequately managed, thus ensuring functionality during the period of extended operation. Under both approaches, license renewal applicants must screen plant systems, structures, and components through an IPA to determine which systems, structures, and components will be subject to a license renewal review and then determine whether additional actions are required to manage the effects of aging so that the intended function is maintained. The principal differences between the proposed rule and the previous rule are in (1) the screening of systems, structures, and components to identify those that must undergo a plant-specific aging management review and (2) the form of this aging management review.

Under the screening of systems, structures, and components that must be further reviewed, the proposed rule effectively narrows the scope of systems, structures, and components subject to an aging management review In general, the previous rule contained a definition of ARDUTLR that would cause many systems, structures, and components to require further aging management review but would allow existing licensee programs and activities (including the maintenance rule) to serve as a basis for concluding that ARDUTLR will be adequately managed in the period of extended operation. The proposed rule would retain the screening of systems, structures, and components but would reduce the scope of systems, structures, and components requiring review to a narrowly defined group based on an NRC determination, in this rulemaking, of the effectiveness of current licensee programs and activities and NRC requirements that will continue into the period of extended operation. Because the proposed rule has essentially the same results with respect to management of aging effects in the period of extended operation as the previous rule, but provides a more efficient process to achieve these results, the environmental impacts of the proposed rule would be similar to those under the previous rule.

With respect to the form of the aging management review, the proposed rule would establish a clear focus on managing the functionality of systems, structures, and components in the face of detrimental aging effects as opposed to identification and mitigation of aging mechanisms. The Commission concluded that the focus on identification of aging mechanisms is not necessary because regardless of the aging mechanism, only those that lead to degraded component performance or condition (i.e., potential loss of functionality) are of concern. Therefore, the Commission concluded that an aging management review that seeks to ensure a component's functionality is a more efficient and appropriate review. This change only improves the efficiency of the licensee's aging management review. Therefore, the environmental impacts would be similar to those under the previous rule.

The ultimate licensee actions to manage aging in the renewal term under the proposed rule are expected to be similar to those under the previous rule However, the required activities to

HeinOnline -- 60 Fed. Reg. 22488 1995

manage the effects of aging will be arrived at more efficiently under the proposed rule. Therefore, the environmental impact of license renewal under the proposed rule would be similar to that for license renewal under the previous rule. Hence, the Commission concluded that the proposed rule would not significantly impact the environment.

The Commission's EA and FONSI for the proposed rule were issued in draft and public comments were solicited. Several public comments were received and are addressed below.

Two commenters stated that the NRC should be required to prepare an EIS for license renewal. In general, these commenters believed that the EIS should include a discussion on the following issues:

(a) A full description of proposed mitigation measures to counteract reactor degradation due to aging;

(b) The cumulative effects of an added 20 years of discharge of radioactive cooling waters and/or steam;

(c) The environmental impacts of prolonged stockpiling of high-level and low-level waste; and

(d) Plans for public involvement from the first scoping session, through subsequent public hearing.

The Commission has undertaken a review of the environmental impacts of license renewal from two different perspectives. First, for the purposes of evaluating the environmental impacts of a formal regulatory process for license renewal, the NRC prepared NUREG–1398. This environmental assessment served to assess the degree to which the renewal of operating licenses via a formal regulatory process would differ from renewal of operating licenses under existing regulations that do not specify standards for license renewal applications. The environmental assessment discussed the issues of additional waste generation, activities required to address aging degradation in the renewal period, and impacts of radioactive discharges. The Commission concluded in that environmental assessment that a formal license renewal regulation establishing the standards for license renewal applications would result in no significant impact from those impacts expected from renewal without a formal license renewal process. The staff performed an additional environmental assessment for the proposed amendments to the previous license renewal rule and concluded, consistent with the previous environmental assessment, that the amended rule would result in no significant impact.

Second, for the purpose of evaluating the environmental impacts associated with granting a renewed license, the NRC is preparing "Generic Environmental Impact Statement for License Renewal of Nuclear Plants" (GEIS), NUREG–1437, as part of its amendments to 10 CFR 51. The GEIS addresses, in generic fashion, the impacts associated with continued operation of a nuclear plant beyond its original license, including the impacts of activities to counter the effects of aging, the impacts of high-level and low-level waste, and the effects of radioactive discharges. In addition, the Commission has proposed amendments to 10 CFR 51 that would require that a supplement to the GEIS be prepared for individual license renewal applications to address those impacts that could not be generically evaluated in the GEIS. This supplement would be issued in draft for public comment.

One commenter stated that the draft FONSI for the proposed rule is inappropriate. The commenter stated that the NRC is creating incentives for the licensees to seek license renewal by easing rules. The commenter stated that the reduction in review of the new rule will result in significant environmental impacts. The Commission disagrees. The FONSI for the proposed rule was based on the FONSI from the previous license renewal rule (see NUREG–1398) and an analysis of the difference between the previous rule and the proposed rule. As discussed in the EA for the proposed rule, the amended rule will result in the same activities required to adequately manage the effects of aging in the period of extended operation as in the previous rule; however, the method for arriving at these activities will be more efficient. This efficiency is gained because the NRC is generically crediting, in this rule, the existing aging management programs for which the applicant would have had to describe and justify under the previous rule. The Commission does not agree with the commenter that the amendments to the previous rule represent any less stringent a review. The environmental impacts from the amendments to the license renewal rule are expected to be the same as the previous rule because the ultimate actions to manage aging will be the same. Therefore, consistent with the finding of no significant impact for the previous rule, the Commission finds this final rule will result in no significant impact.

One comment stated that the waste confidence decision assumptions can not be transferred to license renewal. The waste confidence decision is not relevant to 10 CFR 54 or any of its amendments. The formal requirements that an applicant for renewal must meet and the information that must be submitted for the NRC to conduct a license renewal review are established in 10 CFR 54. The environmental assessment for the previous license renewal rule (NUREG–1398) assessed the degree to which the renewal of operating licenses via a formal regulatory process would differ from renewal of operating licenses under existing regulations that did not specify standards for license renewal. The Commission concluded, in that environmental assessment, that the impacts from spent fuel storage under a formal license renewal process would not differ from the spent fuel impacts from license renewal under existing regulations that did not specify standards for renewals. This conclusion does not rely on the Commission's waste confidence decision.

Upon considering these comments, the Commission has determined that the commenter's concerns do not alter the proposed finding in the EA for the proposed rule. Consequently, the Commission has determined under the NEPA, and the Commission's regulations in Subpart A of 10 CFR Part 51, that this rule is not a major Federal action significantly affecting the quality of the human environment; therefore, an environmental impact statement is not required. This is because this rule will result in the same activities to adequately manage the effects of aging in the period of extended operation as in the previous rule, although, it arrives at these activities in a more efficient manner. The EA and FONSI on which this determination is based are available for inspection at the NRC Public Document Room, 2120 L Street N.W (Lower Level), Washington, DC. Single copies of the environmental assessment may be obtained from John P. Moulton, Office of Nuclear Reactor Regulation, U.S. Nuclear Regulatory Commission, Washington, DC 20555, (301) 415–1106.

## VIII. Paperwork Reduction Act Statement

This final rule amends information collection requirements that are subject to the Paperwork Reduction Act of 1980 (44 U.S.C. 3501 et seq.). These requirements were approved by the Office of Management and Budget, approval number 3150–0155.

The public reporting burden for this collection of information is estimated to average 94,000 hours per response, including the time for reviewing instructions, searching existing data sources, gathering and maintaining the

HeinOnline -- 60 Fed. Reg. 22489 1995

data needed, and completing and reviewing the collection of information. Send comments regarding this burden estimate or any other aspect of this collection of information, including suggestions for reducing this burden, to the Information and Records Management Branch (T6 F33), U.S. Nuclear Regulatory Commission, Washington, DC 20555-0001; and to the Desk Officer, Office of Information and Regulatory Affairs, NEOB-10202, (3150-0155), Office of Management and Budget, Washington, DC 20503.

**IX. Regulatory Analysis**

The NRC prepared a draft regulatory analysis of the values and impacts of the proposed rule and of a set of significant alternatives. The draft regulatory analysis was placed in the Commission's public document room for review by interested members of the public. In addition, a summary of the findings and conclusions of the regulatory analysis were published in the **Federal Register** (59 FR 46591, September 9, 1994) concurrent with the proposed rule. No comments were received on the regulatory analysis. The regulatory analysis has been finalized and is available for inspection in the NRC Public Document Room, 2120 L Street NW (Lower Level), Washington DC. Single copies of the analysis may be obtained from Joseph J. Mate, Office of Nuclear Reactor Regulation, U.S. Nuclear Regulatory Commission, Washington DC 20555, (301) 415-1109.

**X. Regulatory Flexibility Act Certification**

As required by the Regulatory Flexibility Act of 1980, (5 U.S.C. 605 (b)), the Commission certifies that this final rule does not have a significant economic impact upon a substantial number of small entities. The final rule sets forth the application procedures and the technical requirements for renewed operating licenses for nuclear power plants. The owners of nuclear power plants do not fall within the definition of small business entities as defined in Section 3 of the Small Business Act (15 U.S.C. 632), the Small Business Size Standards of the Small Business Administration (13 CFR Part 121), or the Commission's Size Standards (56 FR 56671; November 6, 1991).

**XI. Non-Applicability of the Backfit Rule**

This rule, like the previous license renewal rule, addresses the procedural and technical requirements for obtaining a renewed operating license for nuclear power plants. Although this amendment constitutes a change to an existing regulation, the NRC has determined that the backfit rule, 10 CFR 50.109, does not apply because this amendment only affects prospective applicants for license renewal. The primary impetus for the backfit rule was "regulatory stability." Once the Commission decides to issue a license, the terms and conditions for operating under that license would not be changed arbitrarily post hoc. As the Commission expressed in the preamble for 10 CFR 52, which prospectively changed the requirements for receiving design certifications, the backfit rule—

> [W]as not intended to apply to every regulatory action which changes settled expectations. Clearly, the backfit rule would not apply to a rule which imposed more stringent requirements on all future applicants for construction permits, even though such a rule might arguably have an adverse impact on a person who was considering applying for a permit but had not done so yet. In this latter case, the backfit rule protects the construction permit holder, but not the perspective applicant, or even the present applicant. (54 FR 15385-86; April 18, 1989).

Regulatory stability from a backfitting standpoint is not a relevant issue with respect to this rule. There are no licensees currently holding renewed nuclear power plant operating licenses who would be affected by this rule. No applications for license renewal have been docketed. It is also unlikely that any license renewal applications will be submitted before this rule becomes effective. Consequently, there are no valid licensee or applicant expectations that may be changed regarding the terms and conditions for obtaining a renewed operating license. Accordingly, this rule does not constitute a "backfit" as defined in 10 CFR 50.109(a)(1).

Furthermore, one reason the Commission is amending 10 CFR Part 54 is because of the concerns of nuclear power plant licensees who were dissatisfied with the previous requirements in 10 CFR Part 54 and urged the Commission to modify the rule to address their concerns. Under this circumstance, the policy objective of the backfit rule would not be served by undertaking a backfit analysis. Regulatory and technical alternatives for addressing the concerns with the previous 10 CFR Part 54 were analyzed and considered in the regulatory analysis that has been prepared for this rule. Preparation of a separate backfit statement would not provide any substantial additional benefit. Therefore, the Commission has determined that a backfit analysis pursuant to 10 CFR 50.109 need not be prepared for this rule.

NEI commented that the NRC should review its determination regarding the application of backfit protection to license renewal. Although not clearly stated in its comments, NEI appears to argue that the protection afforded by 10 CFR 50.109 should apply in individual license renewal proceedings when the NRC seeks to impose requirements that "go beyond what is necessary for adequately managing the effects of aging on intended functions in the period of extended operation (i.e., enhancements)." NEI stated that in such cases, the NRC should perform an analysis to demonstrate that the proposed additional requirements will result in substantial increase in overall safety and that direct and indirect costs are justified relative to the safety benefit. Furthermore, NEI believes that if there are two or more means of adequately managing the effects of aging, cost must be taken into account in selecting an alternative.

The industry's desire for a special provision in the rule that would impose backfit-style requirements on the Commission's review is neither necessary nor appropriate. The intent of the license renewal rule is clear—to ensure that the effects of aging on functionality of certain systems, structures, and components are adequately managed in the period of extended operation. The Commission does not intend to impose requirements on a licensee that go beyond what is necessary to adequately manage aging effects. The focus of the industry's concern appears to be on potential disagreements between the Commission and renewal applicants regarding what is or is not considered "adequate" for managing the effects of aging. The Commission understands the industry's concern, but does not believe it appropriate or consistent with current practice to further limit (i.e., beyond the limits established by the rule) the NRC staff in its review of an application for a renewal license.

Additionally, the Commission sees no justification for requiring a consideration of costs among alternative aging management programs. The renewal process is designed such that a renewal applicant proposes the alternatives it believes manages the effects of aging for those structures and components defined by the rule. The NRC staff has the responsibility of reviewing the applicant's proposals and determining whether they are adequate such that there is reasonable assurance that activities authorized by the renewed license will continue to be

HeinOnline -- 60 Fed. Reg. 22490 1995

conducted in accordance with the CLB. The Commission believes that this license renewal review must necessarily be performed without regard to cost.

**List of Subjects**

*10 CFR Part 2*

Administrative practice and procedure, Antitrust, Byproduct material, Classified information, Environmental protection, Nuclear materials, Nuclear power plants and reactors, Penalties, Sex discrimination, Source material, Special nuclear material, Waste treatment and disposal.

*10 CFR Part 51*

Administrative practice and procedure, Environmental impact statement, Nuclear materials, Nuclear power plants and reactors, Reporting and recordkeeping requirements.

*10 CFR Part 54*

Administrative practice and procedure, Aging, Effects of aging, Time-limited aging analyses, Backfitting, Classified information, Criminal penalties, Environmental protection, Nuclear power plants and reactors, Reporting and recordkeeping requirements.

For the reasons set out in the preamble and under the authority of the Atomic Energy Act of 1954, as amended, the Energy Reorganization Act of 1974, as amended, and 5 U.S.C. 552 and 553, the Commission is adopting the following amendments to 10 CFR Parts 2, 51, and 54.

## PART 2—RULES OF PRACTICE FOR DOMESTIC LICENSING PROCEEDINGS

1. The authority citation for Part 2 is revised to read as follows:

**Authority:** Secs. 161, 181, 68 Stat. 948, 953, as amended (42 U.S.C. 2201, 2231); sec. 191, as amended, Pub. L. 87–615, 76 Stat. 409 (42 U.S.C. 2241); sec. 201, 88 Stat. 1242, as amended (42 U.S.C. 5841); 5 U.S.C. 552. Section 2.101 also issued under secs. 53, 62, 63, 81, 103, 104, 105, 68 Stat. 930, 932, 933, 935, 936, 937, 938, as amended (42 U.S.C. 2073, 2092, 2093, 2111, 2133, 2134, 2135); sec. 114(f), Pub. L. 97–425, 96 Stat. 2213, as amended (42 U.S.C. 10134(f)); sec. 102, Pub. L. 91–190, 83 Stat. 853, as amended (42 U.S.C. 4332); sec. 301, 88 Stat. 1248 (42 U.S.C. 5871). Sections 2.102, 2.103, 2.104, 2.105, 2.721 also issued under secs. 102, 103, 104, 105, 183, 189, 68 Stat. 936, 937, 938, 954, 955, as amended (42 U.S.C. 2132, 2133, 2134, 2135, 2233, 2239). Section 2.105 also issued under Pub. L. 97–415, 96 Stat. 2073 (42 U.S.C. 2239). Sections 2.200–2.206 also issued under secs. 161b, i, o, 182, 186, 234, 68 Stat. 948–951, 955, 83 Stat. 444, as amended (42 U.S.C. 2201(b), (i), (o), 2236 2282); sec. 206, 88 Stat. 1246 (42 U.S.C. 5846). Sections 2.600–2.606 also issued under sec. 102, Pub. L. 91–190, 83 Stat. 853 as amended (42 U.S.C. 4332). Sections 2.700a, 2.719 also issued under 5 U.S.C. 554. Sections 2.754, 2.760, 2.770, 2.780, also issued under 5 U.S.C. 557 Section 2.764 and Table 1A of Appendix C are also issued under secs. 135, 141, Pub. L. 97–425, 96 Stat. 2232, 2241 (42 U.S.C. 10155, 10161). Section 2.790 also issued under sec. 103, 68 Stat. 936, as amended (42 U.S.C. 2133) and 5 U.S.C. 552. Sections 2.800 and 2.808 also issued under 5 U.S.C. 553. Section 2.809 also issued under 5 U.S.C. 553 and sec. 29, Pub. L. 85–256, 71 Stat. 579, as amended (42 U.S.C. 2039). Subpart K also issued under sec. 189, 68 Stat. 955 (42 U.S.C. 2239); sec. 134, Pub. L. 97–425, 96 Stat. 2230 (42 U.S.C. 10154). Subpart L also issued under sec. 189, 68 Stat. 955 (42 U.S.C. 2239). Appendix A also issued under sec. 6, Pub. L. 91–560, 84 Stat. 1473 (42 U.S.C. 2135). Appendix B also issued under sec. 10, Pub. L. 99–240, 99 Stat. 1842 (42 U.S.C. 2021b et seq.).

2. In § 2.758, paragraphs (b) and (e) are revised to read as follows:

**§ 2.758 Consideration of Commission rules and regulations in adjudicatory proceedings.**

* * * * *

(b) A party to an adjudicatory proceeding involving initial or renewal licensing subject to this subpart may petition that the application of a specified Commission rule or regulation or any provision thereof, of the type described in paragraph (a) of this section, be waived or an exception made for the particular proceeding. The sole ground for petition for waiver or exception shall be that special circumstances with respect to the subject matter of the particular proceeding are such that the application of the rule or regulation (or provision thereof) would not serve the purposes for which the rule or regulation was adopted. The petition shall be accompanied by an affidavit that identifies the specific aspect or aspects of the subject matter of the proceeding as to which the application of the rule or regulation (or provision thereof) would not serve the purposes for which the rule or regulation was adopted, and shall set forth with particularity the special circumstances alleged to justify the waiver or exception requested. Any other party may file a response thereto, by counter affidavit or otherwise.

* * * * *

(e) Whether or not the procedure in paragraph (b) of this section is available, a party to an initial or renewal licensing proceeding may file a petition for rulemaking pursuant to § 2.802.

## PART 51—ENVIRONMENTAL PROTECTION REGULATIONS FOR DOMESTIC LICENSING AND RELATED REGULATORY FUNCTIONS

3. The authority citation for Part 51 is revised to read as follows:

**Authority:** Sec. 161, 68 Stat. 948, as amended, Sec. 1701, 106 Stat. 2951, 2952, 2953, (42 U.S.C. 2201, 2297f); secs. 201, as amended, 202, 88 Stat. 1242, as amended, 1244 (42 U.S.C. 5841, 5842). Subpart A also issued under National Environmental Policy Act of 1969, secs. 102, 104, 105, 83 Stat. 853–854, as amended (42 U.S.C. 4332,, 4334,, 4335); and Pub. L. 95–604, Title II, 92 Stat. 3033–3041; and sec. 193, Pub. L. 101–575, 104 Stat. 2835, 42 U.S.C. 2243). Sections 51.20, 51.30, 51.60, 51.61, 51.80, and 51.97 also issued under secs. 135, 141, Pub. L. 97–425, 96 Stat. 2232, 2241, and sec. 148, Pub. L. 100–203, 101 Stat. 1330–223 (42 U.S.C. 10155, 10161, 10168). Section 51.22 also issued under sec. 274,73 Stat. 688, as amended by 92 Stat. 3036–3038 (42 U.S.C. 2021) and under Nuclear Waste Policy Act of 1982, sec. 121, 96 Stat. 2228 (42 U.S.C. 10141). Sections 51.43, 51.67, and 51.109 also under Nuclear Waste Policy Act of 1982, sec. 114(f), 96 Stat. 2216, as amended (42 U.S.C. 10134(f)).

4. In § 51.22, paragraph (c)(3) is revised to read as follows:

**§ 51.22 Criterion for categorical exclusion; identification of licensing and regulatory actions eligible for categorical exclusion or otherwise not requiring environmental review.**

* * * * *

(c) * * *

(3) Amendments to Parts 20, 30, 31, 32, 33, 34, 35, 39, 40, 50, 51, 54, 60, 61, 70, 71, 72, 73, 74, 81 and 100 of this chapter which relate to—

(i) Procedures for filing and reviewing applications for licenses or construction permits or other forms of permission or for amendments to or renewals of licenses or construction permits or other forms of permission;

(ii) Recordkeeping requirements; or

(iii) Reporting requirements; and

(iv) Actions on petitions for rulemaking relating to these amendments.

* * * * *

5. Part 54 is revised to read as follows.

## PART 54—REQUIREMENTS FOR RENEWAL OF OPERATING LICENSES FOR NUCLEAR POWER PLANTS

**General Provisions**

Sec.

54.1 Purpose

54.3 Definitions.

54.4 Scope.

54.5 Interpretations.

54.7 Written communications.

54.9 Information collection requirements: OMB approval

HeinOnline -- 60 Fed. Reg. 22491 1995

54.11 Public inspection of applications.
54.13 Completeness and accuracy of information.
54.15 Specific exemptions.
54.17 Filing of application.
54.19 Contents of application—general information.
54.21 Contents of application—technical information.
54.22 Contents of application—technical specifications.
54.23 Contents of application—environmental information.
54.25 Report of the Advisory Committee on Reactor Safeguards.
54.27 Hearings.
54.29 Standards for issuance of a renewed license.
54.30 Matters not subject to a renewal review.
54.31 Issuance of a renewed license.
54.33 Continuation of CLB and conditions of renewed license.
54.35 Requirements during term of renewed license.
54.37 Additional records and recordkeeping requirements.
54.41 Violations.
54.43 Criminal penalties.

**Authority:** Secs. 102, 103, 104, 161, 181, 182, 183, 186, 189, 68 Stat. 936, 937, 938, 948, 953, 954, 955, as amended, sec. 234, 83 Stat. 1244, as amended (42 U.S.C. 2132, 2133, 2134, 2135, 2201, 2232, 2233, 2236, 2239, 2282); secs. 201, 202, 206, 88 Stat. 1242, 1244, as amended (42 U.S.C. 5841, 5842).

## General Provisions

### § 54.1 Purpose.

This part governs the issuance of renewed operating licenses for nuclear power plants licensed pursuant to Sections 103 or 104b of the Atomic Energy Act of 1954, as amended (68 Stat. 919), and Title II of the Energy Reorganization Act of 1974 (88 Stat. 1242).

### § 54.3 Definitions.

(a) As used in this part,

*Current licensing basis* (CLB) is the set of NRC requirements applicable to a specific plant and a licensee's written commitments for ensuring compliance with and operation within applicable NRC requirements and the plant-specific design basis (including all modifications and additions to such commitments over the life of the license) that are docketed and in effect. The CLB includes the NRC regulations contained in 10 CFR Parts 2, 19, 20, 21, 26, 30, 40, 50, 51, 54, 55, 70, 72, 73, 100 and appendices thereto; orders; license conditions; exemptions; and technical specifications. It also includes the plant-specific design-basis information defined in 10 CFR 50.2 as documented in the most recent final safety analysis report (FSAR) as required by 10 CFR 50.71 and the licensee's commitments remaining in effect that were made in docketed licensing correspondence such as licensee responses to NRC bulletins, generic letters, and enforcement actions, as well as licensee commitments documented in NRC safety evaluations or licensee event reports.

*Integrated plant assessment* (IPA) is a licensee assessment that demonstrates that a nuclear power plant facility's structures and components requiring aging management review in accordance with § 54.21(a) for license renewal have been identified and that the effects of aging on the functionality of such structures and components will be managed to maintain the CLB such that there is an acceptable level of safety during the period of extended operation.

*Nuclear power plant* means a nuclear power facility of a type described in 10 CFR 50.21(b) or 50.22.

*Time-limited aging analyses*, for the purposes of this part, are those licensee calculations and analyses that:

(1) Involve systems, structures, and components within the scope of license renewal, as delineated in § 54.4(a);

(2) Consider the effects of aging;

(3) Involve time-limited assumptions defined by the current operating term, for example, 40 years;

(4) Were determined to be relevant by the licensee in making a safety determination;

(5) Involve conclusions or provide the basis for conclusions related to the capability of the system, structure, and component to perform its intended functions, as delineated in § 54.4(b); and

(6) Are contained or incorporated by reference in the CLB.

(b) All other terms in this part have the same meanings as set out in 10 CFR 50.2 or Section 11 of the Atomic Energy Act, as applicable.

### § 54.4 Scope.

(a) Plant systems, structures, and components within the scope of this part are—

(1) Safety-related systems, structures, and components which are those relied upon to remain functional during and following design-basis events (as defined in 10 CFR 50.49 (b)(1)) to ensure the following functions—

(i) The integrity of the reactor coolant pressure boundary;

(ii) The capability to shut down the reactor and maintain it in a safe shutdown condition; or

(iii) The capability to prevent or mitigate the consequences of accidents that could result in potential offsite exposure comparable to the 10 CFR Part 100 guidelines.

(2) All nonsafety-related systems, structures, and components whose failure could prevent satisfactory accomplishment of any of the functions identified in paragraphs (a)(1)(i), (ii), or (iii) of this section.

(3) All systems, structures, and components relied on in safety analyses or plant evaluations to perform a function that demonstrates compliance with the Commission's regulations for fire protection (10 CFR 50.48), environmental qualification (10 CFR 50.49), pressurized thermal shock (10 CFR 50.61), anticipated transients without scram (10 CFR 50.62), and station blackout (10 CFR 50.63).

(b) The intended functions that these systems, structures, and components must be shown to fulfill in § 54.21 are those functions that are the bases for including them within the scope of license renewal as specified in paragraphs (a)(1)–(3) of this section.

### § 54.5 Interpretations.

Except as specifically authorized by the Commission in writing, no interpretation of the meaning of the regulations in this part by any officer or employee of the Commission other than a written interpretation by the General Counsel will be recognized to be binding upon the Commission.

### § 54.7 Written communications.

All applications, correspondence, reports, and other written communications shall be filed in accordance with applicable portions of 10 CFR 50.4.

### § 54.9 Information collection requirements: OMB approval.

(a) The Nuclear Regulatory Commission has submitted the information collection requirements contained in this part to the Office of Management and Budget (OMB) for approval as required by the Paperwork Reduction Act of 1980 (44 U.S.C. 3501 et seq.). OMB has approved the information collection requirements contained in this part under control numbers 150–0155.

(b) The approved information collection requirements contained in this part appear in §§ 54.13, 54.17, 54.19, 54.21, 54.22, 54.23, 54.33, and 54.37.

### § 54.11 Public inspection of applications.

Applications and documents submitted to the Commission in connection with renewal applications may be made available for public inspection in accordance with the provisions of the regulations contained in 10 CFR Part 2.

HeinOnline -- 60 Fed. Reg. 22492 1995

**§ 54.13 Completeness and accuracy of information.**

(a) Information provided to the Commission by an applicant for a renewed license or information required by statute or by the Commission's regulations, orders, or license conditions to be maintained by the applicant must be complete and accurate in all material respects.

(b) Each applicant shall notify the Commission of information identified by the applicant as having, for the regulated activity, a significant implication for public health and safety or common defense and security. An applicant violates this paragraph only if the applicant fails to notify the Commission of information that the applicant has identified as having a significant implication for public health and safety or common defense and security. Notification must be provided to the Administrator of the appropriate regional office within 2 working days of identifying the information. This requirement is not applicable to information that is already required to be provided to the Commission by other reporting or updating requirements.

**§ 54.15 Specific exemptions.**

Exemptions from the requirements of this part may be granted by the Commission in accordance with 10 CFR 50.12.

**§ 54.17 Filing of application.**

(a) The filing of an application for a renewed license must be in accordance with Subpart A of 10 CFR Part 2 and 10 CFR 50.4 and 50.30.

(b) Any person who is a citizen, national, or agent of a foreign country, or any corporation, or other entity which the Commission knows or has reason to know is owned, controlled, or dominated by an alien, a foreign corporation, or a foreign government, is ineligible to apply for and obtain a renewed license.

(c) An application for a renewed license may not be submitted to the Commission earlier than 20 years before the expiration of the operating license currently in effect.

(d) An applicant may combine an application for a renewed license with applications for other kinds of licenses.

(e) An application may incorporate by reference information contained in previous applications for licenses or license amendments, statements, correspondence, or reports filed with the Commission, provided that the references are clear and specific.

(f) If the application contains Restricted Data or other defense information, it must be prepared in such a manner that all Restricted Data and other defense information are separated from unclassified information in accordance with 10 CFR 50.33(j).

(g) As part of its application and in any event prior to the receipt of Restricted Data or the issuance of a renewed license, the applicant shall agree in writing that it will not permit any individual to have access to Restricted Data until an investigation is made and reported to the Commission on the character, association, and loyalty of the individual and the Commission shall have determined that permitting such persons to have access to Restricted Data will not endanger the common defense and security. The agreement of the applicant in this regard is part of the renewed license, whether so stated or not.

**§ 54.19 Contents of application—general information.**

(a) Each application must provide the information specified in 10 CFR 50.33(a) through (e), (h), and (i). Alternatively, the application may incorporate by reference other documents that provide the information required by this section.

(b) Each application must include conforming changes to the standard indemnity agreement, 10 CFR 140.92, Appendix B, to account for the expiration term of the proposed renewed license.

**§ 54.21 Contents of application—technical information.**

Each application must contain the following information:

(a) An integrated plant assessment (IPA). The IPA must—

(1) For those systems, structures, and components within the scope of this part, as delineated in § 54.4, identify and list those structures and components subject to an aging management review. Structures and components subject to an aging management review shall encompass those structures and components—

(i) That perform an intended function, as described in § 54.4, without moving parts or without a change in configuration or properties. These structures and components include, but are not limited to, the reactor vessel, the reactor coolant system pressure boundary, steam generators, the pressurizer, piping, pump casings, valve bodies, the core shroud, component supports, pressure retaining boundaries, heat exchangers, ventilation ducts, the containment, the containment liner, electrical and mechanical penetrations, equipment hatches, seismic Category I structures, electrical cables and connections, cable trays, and electrical cabinets, excluding, but not limited to, pumps (except casing), valves (except body), motors, diesel generators, air compressors, snubbers, the control rod drive, ventilation dampers, pressure transmitters, pressure indicators, water level indicators, switchgears, cooling fans, transistors, batteries, breakers, relays, switches, power inverters, circuit boards, battery chargers, and power supplies; and

(ii) That are not subject to replacement based on a qualified life or specified time period.

(2) Describe and justify the methods used in paragraph (a)(1) of this section

(3) For each structure and component identified in paragraph (a)(1) of this section, demonstrate that the effects of aging will be adequately managed so that the intended function(s) will be maintained consistent with the CLB for the period of extended operation.

(b) CLB changes during NRC review of the application. Each year following submittal of the license renewal application and at least 3 months before scheduled completion of the NRC review, an amendment to the renewal application must be submitted that identifies any change to the CLB of the facility that materially affects the contents of the license renewal application, including the FSAR supplement.

(c) An evaluation of time-limited aging analyses.

(1) A list of time-limited aging analyses, as defined in § 54.3, must be provided. The applicant shall demonstrate that—

(i) The analyses remain valid for the period of extended operation;

(ii) The analyses have been projected to the end of the period of extended operation; or

(iii) The effects of aging on the intended function(s) will be adequately managed for the period of extended operation.

(2) A list must be provided of plant-specific exemptions granted pursuant to 10 CFR 50.12 and in effect that are based on time-limited aging analyses as defined in § 54.3. The applicant shall provide an evaluation that justifies the continuation of these exemptions for the period of extended operation.

(d) An FSAR supplement. The FSAR supplement for the facility must contain a summary description of the programs and activities for managing the effects of aging and the evaluation of time-limited aging analyses for the period of extended operation determined by paragraphs (a) and (c) of this section, respectively.

HeinOnline -- 60 Fed. Reg. 22493 1995

**§ 54.22 Contents of application—technical specifications.**

Each application must include any technical specification changes or additions necessary to manage the effects of aging during the period of extended operation as part of the renewal application. The justification for changes or additions to the technical specifications must be contained in the license renewal application.

**§ 54.23 Contents of application—environmental information.**

Each application must include a supplement to the environmental report that complies with the requirements of Subpart A of 10 CFR Part 51.

**§ 54.25 Report of the Advisory Committee on Reactor Safeguards.**

Each renewal application will be referred to the Advisory Committee on Reactor Safeguards for a review and report. Any report will be made part of the record of the application and made available to the public, except to the extent that security classification prevents disclosure.

**§ 54.27 Hearings.**

A notice of an opportunity for a hearing will be published in the **Federal Register** in accordance with 10 CFR 2.105. In the absence of a request for a hearing filed within 30 days by a person whose interest may be affected, the Commission may issue a renewed operating license without a hearing upon 30-day notice and publication once in the **Federal Register** of its intent to do so.

**§ 54.29 Standards for issuance of a renewed license.**

A renewed license may be issued by the Commission up to the full term authorized by § 54.31 if the Commission finds that:

(a) Actions have been identified and have been or will be taken with respect to the matters identified in Paragraphs (a)(1) and (a)(2) of this section, such that there is reasonable assurance that the activities authorized by the renewed license will continue to be conducted in accordance with the CLB, and that any changes made to the plant's CLB in order to comply with this paragraph are in accord with the Act and the Commission's regulations. These matters are:

(1) managing the effects of aging during the period of extended operation on the functionality of structures and components that have been identified to require review under § 54.21(a)(1); and

(2) time-limited aging analyses that have been identified to require review under § 54.21(c).

(b) Any applicable requirements of Subpart A of 10 CFR Part 51 have been satisfied.

(c) Any matters raised under § 2.758 have been addressed.

**§ 54.30 Matters not subject to a renewal review.**

(a) If the reviews required by § 54.21 (a) or (c) show that there is not reasonable assurance during the current license term that licensed activities will be conducted in accordance with the CLB, then the licensee shall take measures under its current license, as appropriate, to ensure that the intended function of those systems, structures or components will be maintained in accordance with the CLB throughout the term of its current license.

(b) The licensee's compliance with the obligation under Paragraph (a) of this section to take measures under its current license is not within the scope of the license renewal review.

**§ 54.31 Issuance of a renewed license.**

(a) A renewed license will be of the class for which the operating license currently in effect was issued.

(b) A renewed license will be issued for a fixed period of time, which is the sum of the additional amount of time beyond the expiration of the operating license (not to exceed 20 years) that is requested in a renewal application plus the remaining number of years on the operating license currently in effect. The term of any renewed license may not exceed 40 years.

(c) A renewed license will become effective immediately upon its issuance, thereby superseding the operating license previously in effect. If a renewed license is subsequently set aside upon further administrative or judicial appeal, the operating license previously in effect will be reinstated unless its term has expired and the renewal application was not filed in a timely manner.

(d) A renewed license may be subsequently renewed in accordance with all applicable requirements.

**§ 54.33 Continuation of CLB and conditions of renewed license.**

(a) Whether stated therein or not, each renewed license will contain and otherwise be subject to the conditions set forth in 10 CFR 50.54.

(b) Each renewed license will be issued in such form and contain such conditions and limitations, including technical specifications, as the Commission deems appropriate and necessary to help ensure that systems, structures, and components subject to review in accordance with § 54.21 will continue to perform their intended functions for the period of extended operation. In addition, the renewed license will be issued in such form and contain such conditions and limitations as the Commission deems appropriate and necessary to help ensure that systems, structures, and components associated with any time-limited aging analyses will continue to perform their intended functions for the period of extended operation.

(c) Each renewed license will include those conditions to protect the environment that were imposed pursuant to 10 CFR 50.36b and that are part of the CLB for the facility at the time of issuance of the renewed license. These conditions may be supplemented or amended as necessary to protect the environment during the term of the renewed license and will be derived from information contained in the supplement to the environmental report submitted pursuant to 10 CFR Part 51, as analyzed and evaluated in the NRC record of decision. The conditions will identify the obligations of the licensee in the environmental area, including, as appropriate, requirements for reporting and recordkeeping of environmental data and any conditions and monitoring requirements for the protection of the nonaquatic environment.

(d) The licensing basis for the renewed license includes the CLB, as defined in § 54.3(a); the inclusion in the licensing basis of matters such as licensee commitments does not change the legal status of those matters unless specifically so ordered pursuant to paragraphs (b) or (c) of this section.

**§ 54.35 Requirements during term of renewed license.**

During the term of a renewed license, licensees shall be subject to and shall continue to comply with all Commission regulations contained in 10 CFR Parts 2, 19, 20, 21, 26, 30, 40, 50, 51, 54, 55, 70, 72, 73, and 100, and the appendices to these parts that are applicable to holders of operating licenses.

**§ 54.37 Additional records and recordkeeping requirements.**

(a) The licensee shall retain in an auditable and retrievable form for the term of the renewed operating license all information and documentation required by, or otherwise necessary to document compliance with, the provisions of this part.

(b) After the renewed license is issued, the FSAR update required by 10 CFR 50.71(e) must include any systems, structures, and components newly identified that would have been subject

HeinOnline -- 60 Fed. Reg. 22494 1995

to an aging management review or evaluation of time-limited aging analyses in accordance with § 54.21. This FSAR update must describe how the effects of aging will be managed such that the intended function(s) in § 54.4(b) will be effectively maintained during the period of extended operation.

**§ 54.41 Violations.**

(a) The Commission may obtain an injunction or other court order to prevent a violation of the provisions of the following acts—

(1) The Atomic Energy Act of 1954, as amended.

(2) Title II of the Energy Reorganization Act of 1974, as amended or

(3) A regulation or order issued pursuant to those acts.

(b) The Commission may obtain a court order for the payment of a civil penalty imposed under Section 234 of the Atomic Energy Act—

(1) For violations of the following—

(i) Sections 53, 57, 62, 63, 81, 82, 101, 103, 104, 107, or 109 of the Atomic Energy Act of 1954, as amended;

(ii) Section 206 of the Energy Reorganization Act;

(iii) Any rule, regulation, or order issued pursuant to the sections specified in paragraph (b)(1)(i) of this section;

(iv) Any term, condition, or limitation of any license issued under the sections specified in paragraph (b)(1)(i) of this section.

(2) For any violation for which a license may be revoked under Section 186 of the Atomic Energy Act of 1954, as amended.

**§ 54.43 Criminal penalties.**

(a) Section 223 of the Atomic Energy Act of 1954, as amended, provides for criminal sanctions for willful violations of, attempted violation of, or conspiracy to violate, any regulation issued under sections 161b, 161i, or 161o of the Act. For purposes of section 223, all the regulations in Part 54 are issued under one or more of sections 161b, 161i, or 161o, except for the sections listed in paragraph (b) of this section.

(b) The regulations in Part 54 that are not issued under Sections 161b, 161i, or 161o for the purposes of Section 223 are as follows: §§ 54.1, 54.3, 54.4, 54.5, 54.7, 54.9, 54.11, 54.15, 54.17, 54.19, 54.21, 54.22, 54.23, 54.25, 54.27, 54.29, 54.31, 54.41, and 54.43.

Dated at Rockville, Maryland, this 1st day of May, 1995.

For the Nuclear Regulatory Commission.

**John C. Hoyle,**

*Secretary of the Commission.*

[FR Doc. 95-11136 Filed 5-5-95; 8:45 am]

BILLING CODE 7590-01-P

## SMALL BUSINESS ADMINISTRATION

### 13 CFR Part 123

### Disaster—Waiver of Judgment Lien Restriction

**AGENCY:** Small Business Administration.

**ACTION:** Final rule.

**SUMMARY:** This final rule applies only to disaster loan assistance. It will enable SBA to waive, for good cause shown, the restriction in the Federal Debt Collection Procedures Act of 1990 prohibiting debtors on whose property the United States has an outstanding judgment lien from receiving disaster loan assistance from the Federal Government.

**EFFECTIVE DATE:** This regulation is effective on May 8, 1995.

**FOR FURTHER INFORMATION CONTACT:** Bernard Kulik at 202/205-6734, Associate Administrator for Disaster Assistance, U.S. Small Business Administration, 409 Third Street SW, Washington, DC 20416.

**SUPPLEMENTARY INFORMATION:** The Federal Debt Collection Procedures Act of 1990 (28 U.S.C. 3201(e)) provides that a debtor who owns property which is subject to a judgment lien for a debt owed to the United States shall not be eligible to receive any grant or loan which is made, insured, guaranteed or financed directly or indirectly by the United States. It also provides that such debtor shall not be eligible to receive funds directly from the Federal Government in any program, except funds to which the debtor is entitled as beneficiary, until the judgment is paid in full or otherwise satisfied. However, the statute permits any agency responsible for such grants or loans to promulgate regulations to allow for waivers of this restriction. As an agency authorized to provide several forms of assistance proscribed by this restriction, including disaster loan assistance and other types of direct and guaranteed loans, SBA also has the waiver authority conferred by the statute.

SBA recognizes that disaster losses may strain the financial resources of responsible debtors to such extent as to prevent them from meeting their financial obligations to the United States. Such losses also may prevent debtors who have been complying with agreements to satisfy one or more judgments in favor of the United States from continuing to comply with the terms of those agreements. Therefore, by publication in the **Federal Register** on June 29, 1994, 59 FR 33456, SBA proposed to issue a regulation permitting it to waive the restriction on eligibility for physical and economic injury disaster assistance provided under section (7)(b) (1) and (2) of the Small Business Act, 15 U.S.C. 636(b) (1) and (2), where there exists good cause to do so.

The proposed regulation applied to applicants for disaster assistance who have outstanding judgment liens in favor of SBA or in favor of other agencies. It identified two nonexclusive instances in which good cause will ordinarily be found to exist, both of them involving adverse circumstances occasioned by the disaster for which the assistance is sought.

Waivers would be granted denying the eligibility review of an application for either physical or economic injury disaster assistance, but only upon a demonstration of good cause by the applicant. Examples of good cause include, but are not limited to: (1) Delinquencies leading to a judgment lien, which are caused by a disaster, whether the original debt was incurred prior to or after the disaster, and (2) defaults in any agreement to satisfy a judgment lien, which are caused by a disaster, whether the agreement has been made with SBA, another creditor agency, or any other Federal entity holding the lien, such as the Resolution Trust Corporation or the Federal Deposit Insurance Corporation. In the case of agreements with other agencies, SBA will not waive the restriction on eligibility until the appropriate Federal entity has certified that the debtor had made adhering satisfactorily to the terms of the agreement prior to the commencement date of the disaster

The proposed regulation contemplates that SBA's Associate Administrator for Disaster Assistance, or his/her designee will make the determination as to whether good cause for waiving the restriction has been demonstrated by the applicant. Although such determinations are subject to the provisions of § 123 12 governing requests for reconsideration, no appeal from an adverse determination is contemplated.

SBA received no comments from the public in response to the June 29, 1994 Notice of Proposed Rulemaking. Therefore, by this publication, SBA is finalizing the rule as proposed

**Compliance With Executive Orders 12866, 12612 and 12778; the Regulatory Flexibility Act, 5 U.S.C. 601 et seq.; and The Paperwork Reduction Act, 44 U.S.C. CH 35**

SBA submitted this final rule to the Office of Management and Budget for purposes of Executive Order 12866

HeinOnline -- 60 Fed. Reg. 22495 1995

# EXHIBIT 2

## 2.2 PLANT LEVEL SCOPING RESULTS

Table 2.2-1a-IP2 and Table 2.2-1a-IP3 list the mechanical systems within the scope of license renewal for IPEC Unit 2 and Unit 3, respectively. Table 2.2-1b-IP2 and Table 2.2-1b-IP3 list the electrical and instrumentation and controls systems within the scope of license renewal for IPEC Unit 2 and Unit 3. Table 2.2-3 lists the structures that are within the scope of license renewal for IPEC. For mechanical systems, a reference is given to the section which describes the system. For electrical systems, no description is necessary since electrical systems are in scope by default (see Section 2.5). For structures, a reference is given to the section that includes the structure in the evaluation.

Table 2.2-2-IP2, Table 2.2-2-IP3 and Table 2.2-4 list the systems and structures that do not meet the criteria specified in 10 CFR 54.4(a) and are therefore excluded from the scope of license renewal. For each item on these lists, the table also provides a reference (if applicable) to the section of the Updated Final Safety Analysis Report (UFSAR) that describes the system or structure. For structures with no description in the UFSAR, a brief description of the building function is given. None of these structures house safety-related equipment.

The IP2 and IP3 units were originally constructed, owned and operated by the Consolidated Edison Company of New York. IP2 began operation in 1973 and IP3 in 1975. With the exception of minor design differences due to new requirements for IP3, the units were essentially the same design. Shortly after the initial operating license for IP3 was issued, that unit was purchased by the Power Authority of the Sate of New York, which subsequently assumed responsibility for its operation. The two units were operated independently until Entergy purchased and assumed operations of IP2 and IP3 in 2001 and 2000 respectively. Because of the extended period of independent operations, differences developed in the design and operation of the two units. Different approaches were taken to resolve emergent licensing and design issues, resulting in further variations in the plants' designs. Some aspects of the unit operations were different, including methods for identification and documentation of systems and their boundaries. As a result, even though the plants remain largely the same, with about the same number of components per unit, there are marked differences in the number of IP2 and IP3 systems and in the boundaries for similarly named systems.

The list of systems used in these tables and determination of system boundaries is based on the IPEC component database and flow diagrams (see Section 2.1.1). System intended functions are identified in the section referenced in Tables 2.2-1a-IP2 and 2.2-1a-IP3. Component types subject to aging management review and their intended functions are provided in tables for each system.

As needed, components are grouped functionally for the aging management review. For example, ASME Class 1 components in various systems (e.g., the residual heat removal and containment spray systems) are evaluated with the ASME Class 1 reactor coolant system in Section 3.1.2.1.3, and containment penetrations from various systems are grouped into one

containment penetrations review in Section 3.2.2.1.5. For each system, see the discussion in Section 2 under "Components Subject to Aging Management Review" for further information concerning which aging management review includes components from that system.

Nonsafety-related components whose failure could prevent satisfactory accomplishment of safety functions (10 CFR 54.4(a)(2)) due to the potential for a physical interaction (see Section 2.1.1.2) are evaluated together in an (a)(2) aging management review (AMR). The (a)(2) AMR includes nonsafety-related components with the potential for a spatial interaction with a safety-related system as well as components in safety-related systems outside the safety class pressure boundary, such as piping, valves, pumps, and support elements, that are required to be structurally sound in order to maintain the integrity of safety class piping. Section 2.3.3.19 discusses systems within the scope of license renewal based on the criterion of 10 CFR 54.4(a)(2) due to the potential for a physical interaction.

Components subject to aging management review are highlighted on license renewal drawings, with the exception of components in scope for 10 CFR 54.4(a)(2) for a physical interaction with other equipment that could prevent accomplishment of a safety function. Drawings are flagged as needed to indicate system intended function boundaries. For further discussion of license renewal drawings, see Section 2.1.2.1.3.

The list of plant structures was developed from a review of plant layout drawings, maintenance rule documentation, design basis documents, and the UFSAR. Structure intended functions are identified in the section referenced in Table 2.2-3. Structural commodities associated with mechanical systems, such as pipe supports and insulation, are evaluated with the structural bulk commodities.

Because of the bounding approach used for scoping electrical and I&C equipment, all electrical and I&C commodities contained in electrical and mechanical systems are in scope by default. Table 2.2-1b provides the list of electrical and I&C systems for Unit 2 and Unit 3 that do not include mechanical components that meet the scoping criteria of 10 CFR 54.4. Systems with mechanical components that meet the scoping criteria of 10 CFR 54.4 are listed in Table 2.2-1a-IP2 and Table 2.2-1a-IP3. Descriptions of each electrical system are not provided. For further information, see Section 2.5, Scoping and Screening Results: Electrical and Instrumentation and Controls Systems.

**Table 2.2-1b-IP2**
**Electrical and I&C Systems within the Scope of License Renewal**
**(Bounding Approach)**

| System Code | Unit 2 System Name | UFSAR Section |
|---|---|---|
| 118V | 118 VAC Electrical | UFSAR 8.2.2.5 |
| 120V | 120 VAC Electrical | UFSAR 8.2 |
| 13.8 | 13.8 KVAC Electrical | UFSAR 8.2.1 |
| 138K | 138 KVAC Electrical | UFSAR 8.2.1 |
| 220V | 220 VAC Electrical | None |
| 22KV | 22 KVAC Electrical | None |
| 345K | 345 KVAC Electrical | UFSAR 8.2.1 |
| 440V | 440 VAC Electrical | UFSAR 8.3 |
| 480V | 480 VAC Electrical | UFSAR 8.2.2.3 |
| 6.9K | 6.9 KVAC Electrical | UFSAR 8.2.2.2 |
| COM | Communications | UFSAR 7.7.4 |
| COMP | Computer | UFSAR 3.2.5 |
| DC | Batteries and 125V DC | UFSAR 8.2.2.4, 8.2.3.5 |
| EANS | Emergency Alert Notification | None |
| EGND | Earth Grounds | None |
| EHT | Electrical Heat Tracing | UFSAR 9.2.2.4.23, 9.2.2.5.13 |
| EML | Emergency Lighting | UFSAR 7.7.3.3.6 |
| EOFE | EOF Electrical Distribution | None |

**Table 2.2-1b-IP2**
**Electrical and I&C Systems within the Scope of License Renewal (Bounding Approach) (Continued)**

| System Code | Unit 2 System Name | UFSAR Section |
|---|---|---|
| EP | Electrical Penetrations | UFSAR 5.1.4.2.1, 7.2.4.1.5 |
| ESFA | Engineered Safeguards Features Actuation | UFSAR 7.2.3.2 |
| ICI | In-Core Instrumentation | UFSAR 7.6 |
| LGHT | Lighting & 110 Volt | None |
| MET | Meteorological System | IP3 UFSAR 2.6.5 |
| NIS | Nuclear Instrumentation | UFSAR 7.4 |
| OPS | Overpressurization Protection | UFSAR 7.3.3.5 |
| RMS | Radiation Monitoring | UFSAR 11.2.3 |
| RPI | Rod Position Indication | UFSAR 3B.3 |
| RPS | Reactor Protection System | UFSAR 7.2.3.1 |
| SEC | Security | None |
| SISA | Safety Injection System Actuation | UFSAR 7.2.5.1.13 |

**Table 2.2-1b-IP3**
**Electrical and I&C Systems within the Scope of License Renewal (Bounding Approach)**

| System Code | Unit 3 System Name | UFSAR Section |
|---|---|---|
| 120V | 120 VAC Electrical | UFSAR 8.2.2 |
| 13.8KV | 13.8 KVAC Electrical | UFSAR 8.2.1 |
| 138KV | 138 KVAC Electrical | UFSAR 8.2.1 |
| 220V | 220 VAC Electrical | None |
| 22KV | 22 KVAC Electrical | None |
| 345KV | 345 KVAC Electrical | UFSAR 8.2.1 |
| 480V | 480 VAC Electrical | UFSAR 8.2.2 |

**Table 2.2-1b-IP3**
**Electrical and I&C Systems within the Scope of License Renewal (Bounding Approach) (Continued)**

| System Code | Unit 3 System Name | UFSAR Section |
|---|---|---|
| 6.9KV | 6.9 KVAC Electrical | UFSAR 8.2.2 |
| AIR | Air (General) | None |
| AMSAC | ATWS Mitigating System Actuation Circuitry | UFSAR 7.2.2 |
| ARM | Area Radiation Monitoring | UFSAR 11.2.3.2 |
| CAM | Cameras | None |
| CET | Core Exit Thermocouples | UFSAR 7.6.2 |
| CFM | Critical Functions Monitoring | UFSAR 7.5.2 |
| COMM | Communications | UFSAR 9.6.5 |
| COMP | Computer | None |
| CPFHT | Condensate Polisher Facility Heat Trace | None |
| DCPWR | DC Power | UFSAR 8.2 |
| ED | Electrical Distribution | UFSAR 8.2 |
| EHT | Electrical Heat Tracing | None |
| EHT 31 | Intake Structure Heat Trace | None |
| EHT 32 | Yard Area Heat Trace | None |
| EHT 33 | Boric Acid Heat Trace | UFSAR 9.2.2 |
| EHT 34 | Nuclear Tank Heat Trace | UFSAR 9.2.2 |
| EHT 35 | Diesel Generator Heat Trace | None |
| EM | Environmental Monitoring | UFSAR 2.9 |
| EML | Emergency Lighting | UFSAR 9.6.2.6 |
| ESS | Engineered Safeguards Initiate Logic | UFSAR 7.2.2 |
| EXCOR | Excore Nuclear Instrumentation | UFSAR 7.4 |
| FDA | Fire Detection and Alarms | UFSAR 9.6.2.4 |
| FENCE | Fence Protection | None |

**Table 2.2-1b-IP3**
**Electrical and I&C Systems within the Scope of License Renewal (Bounding Approach) (Continued)**

| System Code | Unit 3 System Name | UFSAR Section |
|---|---|---|
| FP | Fire Protection (General) | None |
| FPHHT | Fire Pump House Heat Trace | None |
| HR | Hydrogen Recombiners | UFSAR 6.8.2 |
| HSBAHT | House Service Boiler Annex Heat Trace | None |
| IB | Instrument Bus AC Power | UFSAR 7.2.2 |
| INCOR | Incore Nuclear Instrumentation | UFSAR 7.6.2 |
| LIGHT | Lighting | None |
| MET | Meteorological System | UFSAR 2.6.5 |
| METHT | Meteorological Tower Heat Trace | None |
| MIMS | Metal Impact Monitoring | UFSAR 4.3.6 |
| NIS | Nuclear Instrumentation | UFSAR 7.4.2 |
| OPS | Overpressurization Protection | UFSAR 4.3.4 |
| PAGE | Paging | UFSAR 9.6.5 |
| PMON | Personnel Monitoring | None |
| PRM | Process Radiation Monitoring | UFSAR 11.2.3.1 |
| PVMHT | Plant Vent Monitor Heat Trace | UFSAR 11.2.3.1 |
| PZRC | Pressurizer Control | UFSAR 7.2.3 |
| QSPDS | Qualified Safety Parameter Display | UFSAR 7.5.2 |
| RDC | Rod Control | UFSAR 7.3.2 |
| RDO | Radio | UFSAR 9.6.5 |
| RM | Radiation Monitoring | UFSAR 11.2.3 |
| RPC | Reactor Protection Control | UFSAR 7.2.2 |
| RPI | Rod Position Indication | UFSAR 7.3.2 |
| RTR | Reactor Trip Relays | UFSAR 7.2.2 |

**Table 2.2-1b-IP3**
**Electrical and I&C Systems within the Scope of License Renewal (Bounding Approach) (Continued)**

| System Code | Unit 3 System Name | UFSAR Section |
|---|---|---|
| RVLIS | Reactor Vessel Level Indication | UFSAR 7.5.2 |
| SCC | Security Computer & Concentrators | None |
| SE | Seismic Monitoring | UFSAR 16.1.6 |
| SEC | Security (General) | None |
| SECL | Security Lighting | UFSAR 9.6.2.6 |
| SGLC | Steam Generator Level Control | UFSAR 7.2.2 |
| SPP | Sound Powered Phones | UFSAR 9.6.5 |
| SSHT | Sampling System Heat Trace | None |
| TEL | Telephones | UFSAR 9.6.5 |
| TGEC | Turbine Generator Excitation | UFSAR 10.2.2 |
| TM | Toxic Monitoring | None |
| TSI | Turbine Supervisory Instrumentation | None |
| VCHA | Vapor Containment Hydrogen Analyzer | UFSAR 6.8.2 |
| WGA | Waste Gas Analyzer | UFSAR 11.1.2.1 |

## 2.5 SCOPING AND SCREENING RESULTS: ELECTRICAL AND INSTRUMENTATION AND CONTROL SYSTEMS

Description

As stated in Section 2.1.1, plant electrical and instrument and control (I&C) systems are included in the scope of license renewal as are electrical and I&C components in mechanical systems. The default inclusion of plant electrical and I&C systems in the scope of license renewal reflects the method used for the integrated plant assessments (IPA) of electrical systems, which is different from the methods used for mechanical systems and structures.

The basic philosophy used in the electrical and I&C components IPA is that components are included in the review unless they are specifically screened out. When used with the plant spaces approach, this method eliminates the need for unique identification of every component and its specific location. This assures components are not improperly excluded from an aging management review.

The electrical and I&C IPA began by grouping the total population of components into commodity groups. The commodity groups include similar electrical and I&C components with common characteristics. Component level intended functions of the commodity groups were identified.

During the IPA, commodity groups and specific plant systems were eliminated from further review as the intended functions of commodity groups were examined.

In addition to the plant electrical systems, certain switchyard components required to restore offsite power following a station blackout were conservatively included within the scope of license renewal even though those components are not relied on in safety analyses or plant evaluations to perform a function that demonstrates compliance with the Commission's regulations for station blackout (SBO) (10 CFR 50.63). The evaluation boundaries of the offsite power system are described below.

The purpose of the offsite power system (Figure 2.5-2 and Figure 2.5-3) is to provide the electrical interconnection between IPEC and the offsite transmission network.

UFSAR References

Additional details for electrical commodities can be found in UFSAR Chapters 7 and 8 for both IP2 and IP3.

Evaluation Boundaries

Plant electrical and instrument and control systems are included in the scope of license renewal as are electrical and I&C components in mechanical systems.

The offsite power sources required to support SBO recovery actions are the offsite sources that supply the station auxiliary transformers. Specifically, the offsite power recovery path includes the station auxiliary transformers, the 138KV switchyard circuit breakers supplying the station auxiliary transformers, the circuit breaker-to-transformer and transformer-to-onsite electrical distribution interconnections, and the associated control circuits and structures.

Components Subject to AMR

As discussed in Section 2.1.2.3.1, IPEC electrical commodity groups correspond to two of the commodity groups identified in NEI 95-10. The two commodity groups are

- high-voltage insulators, and
- cables and connections, bus, electrical portions of electrical and I&C penetration assemblies, fuse holders outside of cabinets of active electrical SCs.

The commodity group cables, connections, bus, and electrical portions of I&C penetration assemblies is further divided into the following.

- cable connections (metallic parts)
- electrical cables and connections subject to 10 CFR 50.49 EQ requirements
- electrical cables and connections not subject to 10 CFR 50.49 EQ requirements
- electrical cables and connections not subject to 10 CFR 50.49 EQ requirements used in instrumentation circuits
- electrical connections not subject to 10 CFR 50.49 EQ requirements exposed to borated water leakage
- fuse holders – insulation material
- fuse holders – metallic clamp
- inaccessible medium-voltage (2 kV to 35 kV) cables (e.g., installed underground in conduit or direct buried) not subject to 10 CFR 50.49 EQ requirements
- metal enclosed bus – bus / connections
- metal enclosed bus – enclosure assemblies
- metal enclosed bus – insulation / insulators
- switchyard bus and connections
- transmission conductors and connections
- uninsulated ground conductors
- 138kV direct burial insulated transmission cables

Each of these commodity groups is subject to aging management review with the following exceptions.

- Electrical cables and connections subject to 10 CFR 50.49 EQ requirements are not subject to aging management review since the components are replaced based on qualified life.

- Fuse holders with metallic clamps are either part of a complex active assembly or part of circuits that perform no license renewal intended function.
- Uninsulated ground conductors limit equipment damage in the event of a circuit failure, but do not perform an intended function for license renewal.

Table 2.5-1 lists the component types that require aging management review.

Table 3.6.2-1 provides the results of the aging management review.

**Table 2.5-1**
**Electrical and Instrumentation and Control Systems Components Subject to Aging Management Review**

| Structure and/or Component/Commodity | Intended Function[1] |
|---|---|
| Cable connections (metallic parts) | Conducts electricity |
| Electrical cables and connections not subject to 10 CFR 50.49 EQ requirements | Conducts electricity |
| Electrical cables not subject to 10 CFR 50.49 EQ requirements used in instrumentation circuits | Conducts electricity |
| Electrical connections not subject to 10 CFR 50.49 EQ requirements exposed to borated water leakage | Conducts electricity |
| Fuse holders (insulation material) | Conducts electricity |
| High voltage insulators for SBO recovery | Insulation (electrical) |
| Inaccessible medium-voltage (2KV to 35KV) cables not subject to 10 CFR 50.49 EQ requirements | Conducts electricity |
| Metal-enclosed bus (non-segregated) and connections for SBO recovery | Conducts electricity |
| Metal-enclosed bus (non-segregated), insulation/insulators for SBO recovery | Insulation (electrical) |
| Metal-enclosed bus (non-segregated) enclosure assemblies for SBO recovery | Support for Criterion (a)(3) equipment |
| Switchyard bus and connections for SBO recovery | Conducts electricity |
| Transmission conductors and connections for SBO recovery | Conducts electricity |
| 138kV direct burial insulated transmission cables | Conducts electricity |

1. Intended functions are defined in Table 2.0-1.

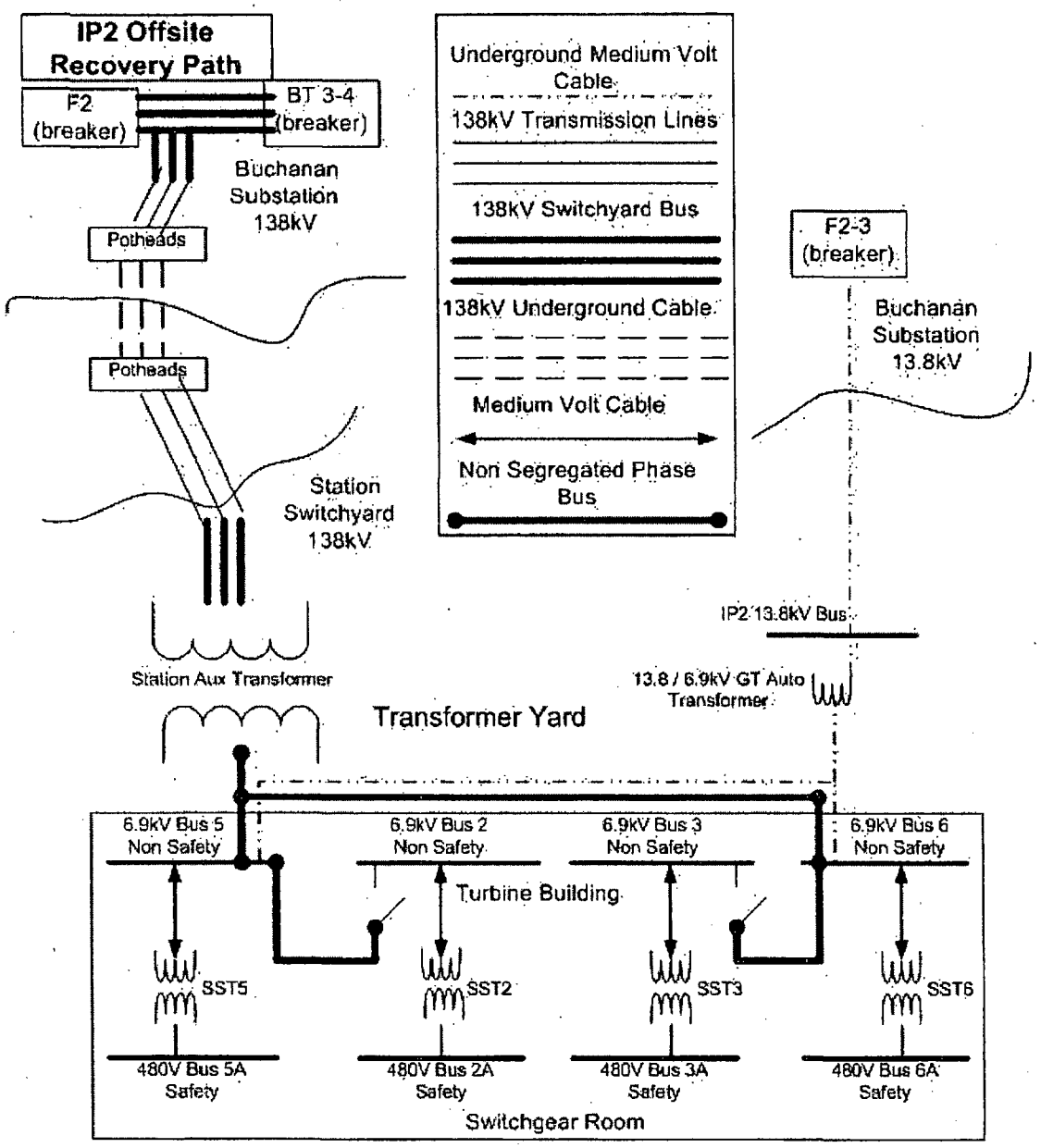


**Figure 2.5-2**
**IP2 Offsite Power Scoping Diagram**

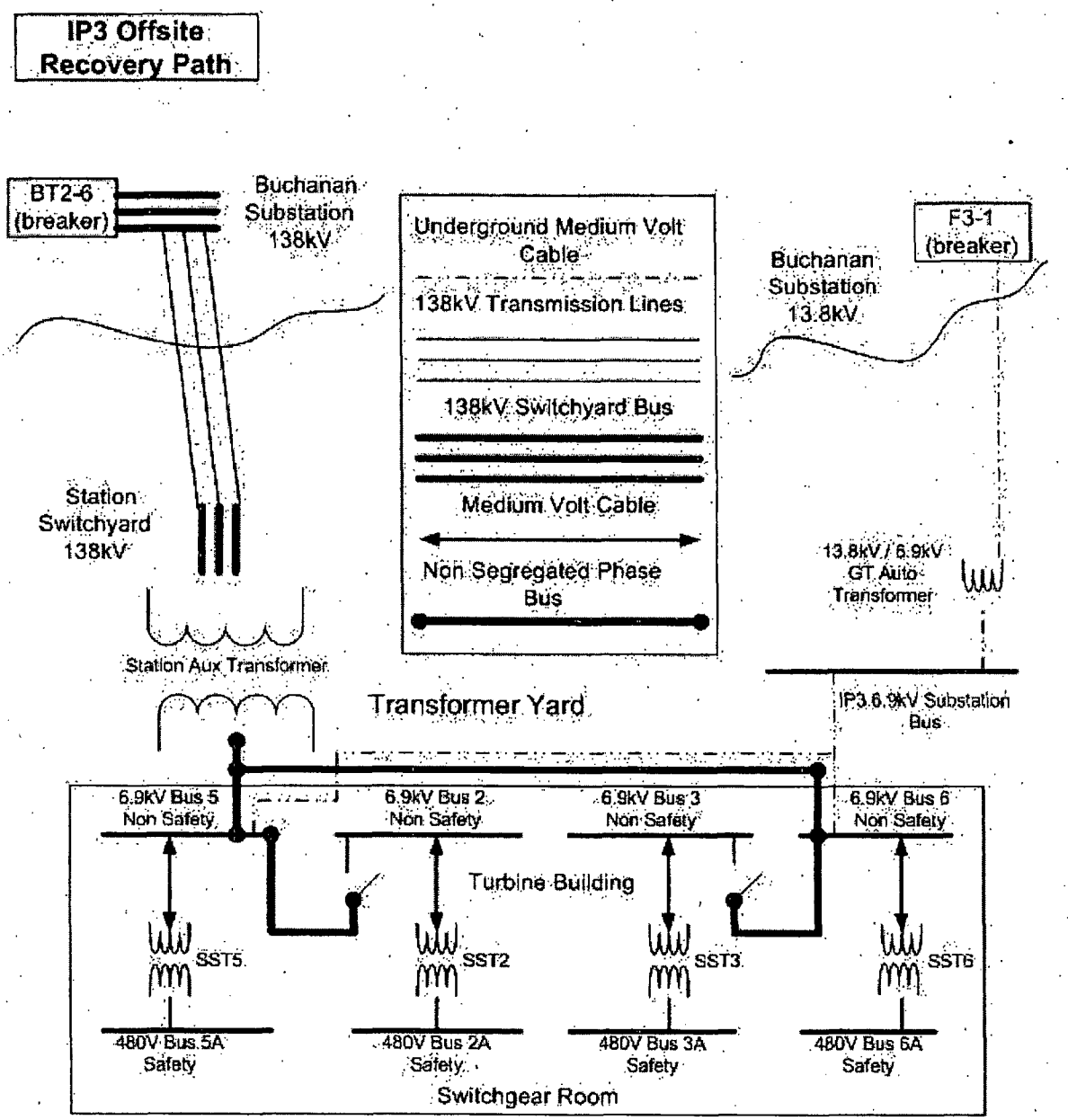


**Figure 2.5-3**
**IP3 Offsite Power Scoping Diagram**

# EXHIBIT 3

Exhibit 3

NEI 95-10
Revision 6

# Industry Guideline For Implementing The Requirements of 10 CFR Part 54 – The License Renewal Rule

Nuclear Energy Institute

June 2005

| ITEM | CATEGORY | STRUCTURE, COMPONENT, OR COMMODITY GROUPING | STRUCTURE, COMPONENT, OR COMMODITY GROUPING MEETS 10CFR54.21(a)(1)(i) (YES/NO) |
|---|---|---|---|
| 72 | Miscellaneous Process Components | Air Compressor | No |
| 73 | Electrical and I&C | Alarm Unit (e.g., fire detection devices) | No |
| 74 | Electrical and I&C | Analyzers (e.g., gas analyzers, conductivity analyzers) | No |
| 75 | Electrical and I&C | Annunciators (e.g., lights, buzzers, alarms) | No |
| 76 | Electrical and I&C | Batteries | No |
| 77 | Electrical and I&C | Cables and Connections, Bus, electrical portions of Electrical and I&C Penetration Assemblies, Includes fuse holders outside of cabinets of active electrical SCs (e.g., electrical penetration assembly cables and connections, connectors, electrical splices, terminal blocks, power cables, control cables, instrument cables, insulated cables, communication cables, uninsulated ground conductors, transmission conductors, isolated-phase bus, nonsegregated-phase bus, segregated-phase bus, switchyard bus) | Yes |
| 78 | Electrical and I&C | Chargers, Converters, Inverters (e.g., converters-voltage/current, converters-voltage/pneumatic, battery chargers/inverters, motor-generator sets) | No |
| 79 | Electrical and I&C | Circuit Breakers (e.g., air circuit breakers, molded case circuit breakers, oil-filled circuit breakers) | No |

| ITEM | CATEGORY | STRUCTURE, COMPONENT, OR COMMODITY GROUPING | STRUCTURE, COMPONENT, OR COMMODITY GROUPING MEETS 10CFR54.21(a)(1)(i) (YES/NO) |
|---|---|---|---|
| 80 | Electrical and I&C | Communication Equipment (e.g., telephones, video or audio recording or playback equipment, intercoms, computer terminals, electronic messaging, radios, transmission line traps and other power-line carrier equipment) | No |
| 81 | Electrical and I&C | Electric Heaters, | No, Yes for a Pressure Boundary if applicable, See Appendix C Reference 2 |
| 82 | Electrical and I&C | Heat Tracing | No See Appendix C Reference 2 |
| 83 | Electrical and I&C | Electrical Controls and Panel Internal Component Assemblies (may include internal devices such as, but not limited to, switches, breakers, indicating lights, fuse holders, etc.) (e.g., main control board, HVAC control board) | No |
| 84 | Electrical and I&C | Elements, RTDs, Sensors, Thermocouples, Transducers (e.g., conductivity elements, flow elements, temperature sensors, radiation sensors,watt transducers, thermocouples, RTDs, vibration probes, amp transducers, frequency transducers, power factor transducers, speed transducers, var. transducers, vibration transducers, voltage transducers) | No<br><br>Yes for a Pressure Boundary if applicable |
| 85 | Electrical and I&C | Fuses | No See Appendix C Reference 3 |
| 86 | Electrical and I&C | Generators, Motors (e.g., emergency diesel generators, ECCS and emergency service water pump motors, small motors, motor-generator sets, steam turbine generators, combustion turbine generators, fan motors, pump motors, valve motors, air compressor motors) | No |

| ITEM | CATEGORY | STRUCTURE, COMPONENT, OR COMMODITY GROUPING | STRUCTURE, COMPONENT, OR COMMODITY GROUPING MEETS 10CFR54.21(a)(1)(i) (YES/NO) |
|---|---|---|---|
| 87 | Electrical and I&C | High-voltage Insulators (e.g., porcelain switchyard insulators, transmission line insulators) | Yes |
| 88 | Electrical and I&C | Surge Arresters (e.g., switchyard surge arresters, lightning arresters, surge suppressers, surge capacitors, protective capacitors) | No |
| 89 | Electrical and I&C | Indicators (e.g., differential pressure indicators, pressure indicators, flow indicators, level indicators, speed indicators, temperature indicators, analog indicators, digital indicators, LED bar graph indicators, LCD indicators) | No |
| 90 | Electrical and I&C | Isolators (e.g., transformer isolators, optical isolators, isolation relays, isolating transfer diodes) | No |
| 91 | Electrical and I&C | Light Bulbs (e.g., indicating lights, emergency lighting, incandescent light bulbs, fluorescent light bulbs) | No<br>See Appendix C Reference 2 |
| 92 | Electrical and I&C | Loop Controllers (e.g., differential pressure indicating controllers, flow indicating controllers, temperature controllers, controllers, speed controllers, programmable logic controller, single loop digital controller, process controllers, manual loader, selector station, hand/auto station, auto/manual station) | No |
| 93 | Electrical and I&C | Meters (e.g., ammeters, volt meters, frequency meters, var meters, watt meters, power factor meters, watt-hour meters) | No |
| 94 | Electrical and I&C | Power Supplies | No |

| ITEM | CATEGORY | STRUCTURE, COMPONENT, OR COMMODITY GROUPING | STRUCTURE, COMPONENT, OR COMMODITY GROUPING MEETS 10CFR54.21(a)(1)(i) (YES/NO) |
|---|---|---|---|
| 95 | Electrical and I&C | Radiation Monitors (e.g., area radiation monitors, process radiation monitors) | No |
| 96 | Electrical and I&C | Recorders (e.g., chart recorders, digital recorders, events recorders) | No |
| 97 | Electrical and I&C | Regulators (e.g., voltage regulators) | No |
| 98 | Electrical and I&C | Relays (e.g., protective relays, control/logic relays, auxiliary relays) | No |
| 99 | Electrical and I&C | Signal Conditioners | No |
| 100 | Electrical and I&C | Solenoid Operators | No |
| 101 | Electrical and I&C | Solid-State Devices (e.g., transistors, circuit boards, computers) | No |
| 102 | Electrical and I&C | Switches (e.g., differential pressure indicating switches, differential pressure switches, pressure indicator switches, pressure switches, flow switches, conductivity switches, level indicating switches, temperature indicating switches, temperature switches, moisture switches, position switches, vibration switches, level switches, control switches, automatic transfer switches, manual transfer switches, manual disconnect switches, current switches, limit switches, knife switches) | No |

| ITEM | CATEGORY | STRUCTURE, COMPONENT, OR COMMODITY GROUPING | STRUCTURE, COMPONENT, OR COMMODITY GROUPING MEETS 10CFR54.21(a)(1)(i) (YES/NO) |
|---|---|---|---|
| 103 | Electrical and I&C | Switchgear, Load Centers, Motor Control Centers, Distribution Panel Internal Component Assemblies (may include internal devices such as, but not limited to, switches, breakers, indicating lights, etc.) (e.g., 4.16 kV switchgear, 480V load centers, 480V motor control centers, 250 VDC motor control centers, 6.9 kV switchgear units, 240/125V power distribution panels) | No |
| 104 | Electrical and I&C | Transformers (e.g., instrument transformers, load center transformers, small distribution transformers, large power transformers, isolation transformers, coupling capacitor voltage transformers) | No See Appendix C Reference 2 |
| 105 | Electrical and I&C | Transmitters (e.g., differential pressure transmitters, pressure transmitters, flow transmitters, level transmitters, radiation transmitters, static pressure transmitters) | No |
| 106 | Valves | Hydraulic Operated Valves | Yes (Bodies) |
| 107 | Valves | Explosive Valves | Yes (Bodies) |
| 108 | Valves | Manual Valves | Yes (Bodies) |
| 109 | Valves | Small Valves | Yes (Bodies) |
| 110 | Valves | Motor-Operated Valves | Yes (Bodies) |

# EXHIBIT 4

Exhibit 4

Mr. Douglas J. Walters
Nuclear Energy Institute
1776 I Street, NW
Suite 300
Washington, DC 20585

September 19, 1997

SUBJECT: DETERMINATION OF AGING MANAGEMENT REVIEW FOR ELECTRICAL COMPONENTS

Dear Mr. Walters:

During the Nuclear Regulatory Commission staff's review of the Nuclear Energy Institute's NEI 95-10, "Industry Guideline for Implementing the Requirements of 10 CFR Part 54 - The License Renewal Rule," the need was identified for guidance on whether selected electrical components are subject to an aging management review. NEI addressed a number of the components in its letter dated December 24, 1996. Consistent with the staff's approach in its February 27, 1997, letter to provide positions on significant issues associated with the license renewal regulatory guide and NEI 95-10, enclosed please find the staff's position on the aging management review requirements for selected electrical components. The recommendations in the enclosed position should be considered when revising NEI 95-10.

Sincerely,

Original signed by:

Christopher I. Grimes, Director
License Renewal Project Directorate
Division of Reactor Program Management
Office of Nuclear Reactor Regulation

Project 690

Enclosure: As stated

cc: w/encl: See next page

Distribution:
Docket File
PUBLIC
PDLR R/F
S. Collins/F. Miraglia, O-12G18
R. Zimmerman, O-12G18
M. Slosson
S. Weiss
S. Meador, O-17G21
R. Correria, O-10A17
R. Wessman, O-7E23
J. Strosnider, O-7D4
L. Shao, O-10D20
J. Calvo, O-7E4
D. Thatcher, O-7E4
S. Droggitis, O-3D23
S. Peterson, O-12G18
G. Lainas, O-7D26
B. Morris, O-9F23
J. Moore/E. Holler, O15B18
G. Mizuno, O-15B18
G. Holahan, O-8E2
B. Sheron, O-7D26
M. Mayfield, T-10E10
A. Murphy, T-10L1
H. Brammer, O-7H15
G. Bagchi, O-7H15
R.L. Gill, Duke Power
B.W. Doroshuk, BGE
PDLR Staff
E. Sullivan O-7 D4

97195
DF03 1/1
PE05 690

DOCUMENT NAME: A:/NEILTR.1 (PTKuo/LLM Disk)
To receive a copy of this document, indicate in the box: "C" = Copy without attachment/enclosure "E" = Copy with attachment/enclosure "N" = No copy

| OFFICE | DE:EELB | | DE:EELB | | OGC | | D:PDLR | E | DE:EELB | |
|---|---|---|---|---|---|---|---|---|---|---|
| NAME | PShemanski P.S. | | JCalvo | | C Marco | | CGrimes | | GLainas | |
| DATE | 08/13/97 | | 08/13/97 | | 08/20/97 | | 09/19/97 | | 09/12/97 | |

OFFICIAL RECORD COPY

9709240243 970919
PDR REVGP ERONUMRC
PDR

REVGP PDR

UNITED STATES
NUCLEAR REGULATORY COMMISSION
WASHINGTON, D.C. 20555-0001

September 19, 1997

Mr. Douglas J. Walters
Nuclear Energy Institute
1776 I Street, NW
Suite 300
Washington, DC 20585

SUBJECT: DETERMINATION OF AGING MANAGEMENT REVIEW FOR ELECTRICAL COMPONENTS

Dear Mr. Walters:

During the Nuclear Regulatory Commission staff's review of the Nuclear Energy Institute's NEI 95-10, "Industry Guideline for Implementing the Requirements of 10 CFR Part 54 - The License Renewal Rule," the need was identified for guidance on whether selected electrical components are subject to an aging management review. NEI addressed a number of the components in its letter dated December 24, 1996. Consistent with the staff's approach in its February 27, 1997, letter to provide positions on significant issues associated with the license renewal regulatory guide and NEI 95-10, enclosed please find the staff's position on the aging management review requirements for selected electrical components. The recommendations in the enclosed position should be considered when revising NEI 95-10.

Sincerely,

CIGrimes

Christopher I. Grimes, Director
License Renewal Project Directorate
Division of Reactor Program Management
Office of Nuclear Reactor Regulation

Project 690

Enclosure: As stated

cc: w/encl: See next page

NUCLEAR ENERGY INSTITUTE (NEI)

Project No. 690

cc: Mr. Dennis Harrison
U.S. Department of Energy
NE-42
Washington, DC 20585

Mr. Douglas J. Walters
Nuclear Energy Institute
1776 I Street, NW
Suite 300
Washington, DC 20006

Mr. Richard P. Sedano, Commissioner
State Liaison Officer
State of Vermont
Department of Public Service
112 State Street
Drawer 20
Montpelier, Vermont 05620-2601

Determination of aging management review for electrical components

Issue:

Determining if transformers, fuses, indicating lights, heat tracing, electric heaters, and recombiners are subject to an aging management review.

NRC staff position:

This issue relates to the guidance provided in the Statements of Consideration (SOC) in which the Commission concluded that an aging management review is required for passive, long-lived structures and components within the scope of the license renewal rule. Appendix B of NEI 95-10 addresses this requirement by identifying typical structure, component, and commodity groupings and a determination as to whether they require an aging management review. Several electrical components, as identified above, were not classified in Appendix B. The rule in §54.21(a)(1), states that "structures and components subject to an aging management review shall encompass those structures and components (i) [t]hat perform an intended function as described in §54.4, without moving parts or without a change in configuration or properties." The SOC uses the term "passive" to represent these characteristics for convenience. The description of "passive" structures and components incorporated into §54.21(a)(1)(i) is used only in conjunction with the IPA review in the license renewal process. The SOC accompanying the renewal rule states: "The Commission has determined that passive structures and components for which aging degradation is not readily monitored are those that perform an intended function without moving parts or a change in configuration or properties." (60 FR 22477). The SOC also states: "[T]he commission has concluded that "a change in configuration or properties" should be interpreted to include "a change in state," which is a term sometimes found in the literature relating to "passive."

§54.21(a)(1)(i) excludes a variety of electrical and instrumentation and control (I&C) structures and components from an aging management review for renewal such as motors, diesel generators, air compressors, pressure transmitters, pressure indicators, water level indicators, switchgear, cooling fans, transistors, batteries, breakers, relays, switches, power inverters, circuit boards, battery chargers, and power supplies. The SOC provides the following discussion as the basis for excluding several electrical and I&C devices from an aging management review: "an electrical relay can change its configuration, and a battery changes its electrolyte properties when discharging" and "a transistor can 'change its state'." The SOC also provides the following discussion as the basis to include electrical cables in an aging management review: "they perform their intended function without moving parts or without a change in configuration or properties and the effects of aging degradation for these components are not readily monitorable." (60 FR 22477)

While §54.21(a)(1)(i) excludes many electrical and I&C components from an aging management review for renewal, it also states that the exclusion is "not limited to" only these components. The staff has considered the aging

management review requirements for transformers, fuses, indicating lights, heat tracing, electric heaters, and recombiners with respect to the definitions, background, and specific electrical examples in the license renewal rule (circuit breakers, relays, motors, circuit boards, etc.). Based on the considerable discussion provided in the rule and SOC, the staff compared the electrical components identified above with the examples explicitly provided in the rule in terms of how the performance of their intended functions would be achieved and whether aging degradation of these components would be readily monitored using currently available techniques, in a similar way by which the examples in the rule (circuit breakers, relays, switches. etc.) would be monitored. These techniques include performance or condition monitoring by testing and maintenance/surveillance programs that include instrument checks, functional tests, calibration functional tests, and response time verification tests. The results of these tests and performance monitoring programs can be analyzed and trended to provide an indication of aging degradation for these electrical components as discussed below:

* Transformers perform their intended function through a change in state by stepping down voltage from higher to a lower value, stepping up voltage to a higher value, or providing isolation to a load. Transformers perform their intended function through a change in state similar to switchgear, power supplies, battery chargers, and power inverters, which have been excluded in §54.21(a)(1)(i) from n aging management review. Any degradation of the transformer's ability to perform its intended function is readily monitorable by a change in the electrical performance of the transformer and the associated circuits. Trending electrical parameters measured during transformer surveillance and maintenance such as Doble test results, and advanced monitoring methods such as infrared thermography, and electrical circuit characterization and diagnosis provide a direct indication of the performance of the transformer. Therefore, transformers are not subject to an aging management review.

* Indicating lights (dual filament) perform their intended function through a change in state by displaying readily monitorable visible light when energized with sufficient voltage. Indicating lights perform their intended function through a change in state similar to transistors and circuit boards, which have been excluded in §54.21(a)(1)(i) from an aging management review. Any degradation of the indicating lights ability to perform its intended function is readily monitorable since the lights (e.g., control room and local panel annunciators) typically have both a visual and audio test capability that is initiated on a periodic basis by the operator. This self-test capability is relied upon to provide a direct indication of the performance of the indicating lights. Therefore, indicating lights are not subject to an aging management review.

* Heat tracing performs its intended function through a change in state by supplying heat when energized, for example, to a boric acid system or a

refueling water storage tank/piping in order to maintain a minimum solution temperature to prevent boron from precipitating out or water from freezing in an outside pipe. Heat tracing performs its intended function through a change in state when energized similar to a power supply, battery charger, power inverter, etc., which have been excluded in §54.21(a)(1)(i) from an aging management review. Any degradation of the heat tracing to perform its intended function is readily monitored by alarm circuitry (control room and local panel annunciators) or by surveillance requirements that monitor solution temperature on a periodic basis which provides a direct indication of the performance of the heat tracing. Therefore, heat tracing is not subject to an aging management review.

* Electric heaters perform their intended function through a change in state by supplying heat when energized, for example, to a pressurizer water volume for reactor coolant system pressure control. Electric heaters perform their intended function through a change in state similar to a battery charger, power inverter, power supply, etc., that change state when energized and which have been excluded in §54.21(a)(1)(i) from an aging management review. Any degradation of the electric heaters' ability to perform their intended function due to aging will be readily monitorable from existing monitoring equipment (voltmeters and active performance of the equipment in the circuit) and surveillance requirements by verifying that the heaters are energized and by measuring circuit current on a periodic basis. Therefore, electric heaters are not subject to an aging management review for the intended function of supplying heat. The pressure boundary intended function would still be subject to an aging management review.

The staff has also considered the aging management review requirements for fuses and hydrogen recombiners as discussed below:

* Fuses perform one of their two intended functions through a change in configuration or state of the fuse by interrupting power in the case of a fault or overload in a load in order to provide protection to the rest of the electrical circuit. Fuses also perform a second intended function which is to maintain electrical continuity during non-faulted conditions. Unlike other electrical components which have simliar continuity functions such as breakers, switches, and relays which have been excluded in § 54.21 (a)(1)(i) from an aging management review, degradation of the fuse's ability to perform this intended function due to aging is not readily monitorable. Degradation of the fuse's intended continuity function may not result in detectable losses in associated system safety functions until degradation becomes unacceptable. Therefore, the staff believes that fuses are subject to an aging management review.

* Recombiners remove gaseous hydrogen from the containment atmosphere by combining hydrogen with oxygen to form water. This intended function is accomplished with several component types such as electric heater

banks, cabling, connections, etc. As such, recombiners should be considered as complex assemblies and should be evaluated on a plant specific basis to determine if they are subject to an aging managenent review for renewal.

Based on the above assessment, the staff concluded that these components, with the exception of fuses and recombiners, perform their intended function(s) with a change in configuration/state and the effects of aging are readily monitored and therefore, are not subject to an aging management review. Electrical and I&C structures and components that are subject to an aging management review for renewal include, but may not be limited to: electrical cables and connections, fuses, electrical and I&C penetration assemblies, cable trays, and electrical and I&C cabinets, panels, racks, frames, enclosures, and other similar component supports.

NRC staff recommendations:

The NRC staff recommends revising Appendix B of NEI 95-10 to indicate that transformers, indicating lights, heat tracing, and electric heaters do not require an aging management review (recombiners should remain plant specific) and to state that electrical and I&C structures and components subject to an aging management review for renewal should include: electrical cables and connections, fuses, electrical and I&C penetration assemblies, cable trays, and electrical and I&C cabinets, panels, racks, frames, enclosures, and other similar component supports.

UNITED STATES OF AMERICA
NUCLEAR REGULATORY COMMISSION

BEFORE THE ATOMIC SAFETY AND LICENSING BOARD

| | | |
|---|---|---|
| In the Matter of | ) | Docket Nos. 50-247-LR and 50-286-LR |
| | ) | |
| ENTERGY NUCLEAR OPERATIONS, INC. | ) | |
| | ) | |
| (Indian Point Nuclear Generating Units 2 and 3) | ) | |
| | ) | August 14, 2009 |

## CERTIFICATE OF SERVICE

I hereby certify that copies of (1) "Applicant's Motion for Summary Disposition of Contention New York State 8 (Electrical Transformers)" dated August 14, 2009; (2) "Statement of Material Facts" dated August 14, 2009; (3) "Declaration of Steven E. Dobbs in Support of Entergy's Motion for Summary Disposition of New York State Contention 8" dated August 12, 2009; (4) "Declaration of Roger B. Rucker in Support of Entergy's Motion for Summary Disposition of New York State Contention 8" dated August 12, 2009; (5) "Declaration of John W. Craig in Support of Entergy's Motion for Summary Disposition of New York State Contention 8" dated August 12, 2009; and (6) supporting Exhibits 1 through 4 were served this 14th day of August, 2009 upon the persons listed below, by first class mail and by e-mail as shown below.

Office of the Secretary **
Attn: Rulemaking and Adjudications Staff
U.S. Nuclear Regulatory Commission
Washington, D.C. 20555-0001
(E-mail: hearingdocket@nrc.gov)

Administrative Judge
Lawrence G. McDade, Chair
Atomic Safety and Licensing Board Panel
Mail Stop: T-3 F23
U.S. Nuclear Regulatory Commission
Washington, DC 20555-0001
(E-mail: lgm1@nrc.gov)

Administrative Judge
Richard E. Wardwell
Atomic Safety and Licensing Board Panel
Mail Stop: T-3 F23
U.S. Nuclear Regulatory Commission
Washington, DC 20555-0001
(E-mail: rew@nrc.gov)

Administrative Judge
Kaye D. Lathrop
Atomic Safety and Licensing Board Panel
190 Cedar Lane E.
Ridgway, CO 81432
(E-mail: kdl2@nrc.gov)

Office of Commission Appellate Adjudication
U.S. Nuclear Regulatory Commission
Mail Stop: O-16G4
Washington, DC 20555-0001
(E-mail: ocaamail@nrc.gov)

Zachary S. Kahn, Law Clerk
Atomic Safety and Licensing Board Panel
Mail Stop: T-3 F23
U.S. Nuclear Regulatory Commission
Washington, DC 20555-0001
(E-mail: zxk1@nrc.gov)

Sherwin E. Turk, Esq.
Beth N. Mizuno, Esq.
David E. Roth, Esq.
Brian G. Harris, Esq.
Andrea Z. Jones, Esq.
Office of the General Counsel
Mail Stop: O-15 D21
U.S. Nuclear Regulatory Commission
Washington, DC 20555-0001
(E-mail: set@nrc.gov)
(E-mail: bnm1@nrc.gov)
(E-mail: david.roth@nrc.gov)
(E-mail: brian.harris@nrc.gov)
(E-mail: andrea.jones@nrc.gov)

Greg Spicer, Esq.
Office of the Westchester County Attorney
148 Martine Avenue, 6th Floor
White Plains, NY 10601
(E-mail: gss1@westchestergov.com)

Manna Jo Greene
Environmental Director
Hudson River Sloop Clearwater, Inc.
112 Little Market Street
Poughkeepsie, NY 12601
(E-mail: mannajo@clearwater.org)

Thomas F. Wood, Esq.
Daniel Riesel, Esq.
Ms. Jessica Steinberg, J.D.
Sive, Paget & Riesel, P.C.
460 Park Avenue
New York, NY 10022
(E-mail: driesel@sprlaw.com)
(E-mail: jsteinberg@sprlaw.com)

Stephen C. Filler, Board Member
Hudson River Sloop Clearwater, Inc.
303 South Broadway, Suite 222
Tarrytown, NY 10591
(E-mail: sfiller@nylawline.com)

John Louis Parker, Esq.
Regional Attorney
Office of General Counsel, Region 3
NYS Dept. of Environmental Conservation
21 S. Putt Corners Road
New Paltz, New York 12561-1620
(E-mail: jlparker@gw.dec.state.ny.us)

Ross Gould, Member
Hudson River Sloop Clearwater, Inc.
10 Park Avenue, #5L
New York, NY 10016
(E-mail: rgouldesq@gmail.com)

Michael J. Delaney, V.P. – Energy
New York City Economic Development Corp.
110 William Street
New York, NY 10038
(E-mail: mdelaney@nycedc.com)

Phillip Musegaas, Esq.
Deborah Brancato, Esq.
Riverkeeper, Inc.
828 South Broadway
Tarrytown, NY 10591
(E-mail: phillip@riverkeeper.org)
(E-mail: dbrancato@riverkeeper.org)

Daniel E. O'Neill, Mayor
James Siermarco, M.S.
Liaison to Indian Point
Village of Buchanan
Municipal Building
236 Tate Avenue
Buchanan, NY 10511-1298
(E-mail: vob@bestweb.net)

Robert D. Snook, Esq.
Assistant Attorney General
Office of the Attorney General
State of Connecticut
55 Elm Street
P.O. Box 120
Hartford, CT 06141-0120
(E-mail: Robert.Snook@po.state.ct.us)

Andrew M. Cuomo, Esq.
Attorney General of the State of New York
John J. Sipos, Esq.
Charlie Donaldson Esq.
Assistants Attorney General
The Capitol
Albany, NY 12224-0341
(E-mail: john.sipos@oag.state.ny.us)

Joan Leary Matthews, Esq.
Senior Attorney for Special Projects
Office of the General Counsel
New York State Department of
Environmental Conservation
625 Broadway, 14th Floor
Albany, NY 12207
(E-mail: jlmatthe@gw.dec.state.ny.us)

Mylan L. Denerstein, Esq.
Executive Deputy Attorney General,
Social Justice
Office of the Attorney General
of the State of New York
120 Broadway, 25th Floor
New York, New York 10271
(E-mail: Mylan.Denerstein@oag.state.ny.us)

Janice A. Dean
Office of the Attorney General
of the State of New York
Assistant Attorney General
120 Broadway, 26th Floor
New York, New York 10271
(E-mail: Janice.Dean@oag.state.ny.us)

** Original and 2 copies provided to the Office of the Secretary.

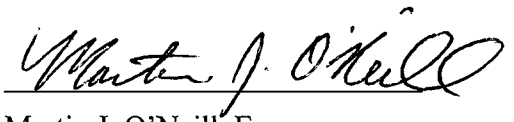

Martin J. O'Neill, Esq.
Counsel for Entergy Nuclear Operations, Inc.

DB1/63525704.1