Calvert Cliffs Nuclear Power Plant Unit 3

Combined License Application

Part 5: Emergency Plan

This COLA Part includes RCOLA generic text.
Site Specific Text is enclosed in braces:
{Site Specific Information}

Revision ~~4~~5
~~February,~~June 2009

© 2007 UniStar Nuclear Services, LLC
All rights reserved. COPYRIGHT PROTECTED

{CALVERT CLIFFS NUCLEAR POWER PLANT UNIT 3}
EMERGENCY RESPONSE PLAN

{Calvert Cliffs 3 Nuclear Project
and
UniStar Nuclear Operating Services}
Revision 54

Approved by _____ Date _____
Senior Vice President, Regulatory Affairs

Table of Contents

Section **Page**

Part I: INTRODUCTION

A: Purpose ..... Part 1, 1
B: Background ..... Part 1, 2
C: Scope ..... Part 1, 3
D: Planning Basis ..... Part 1, 3
E: Contiguous - Jurisdiction Governmental Emergency Planning ..... Part 1, 4
F: Integrated Guidance and Criteria ..... Part 1, 4
G: Funding and Technical Assistance ..... Part 1, 4
H: Emergency Response Organization ..... Part 1, 4
I: Federal Response ..... Part 1, 5
J: Form and Content of Plan ..... Part 1, 5

Part II: PLANNING STANDARDS AND CRITERIA

Section A: Assignment of Responsibility

1. Concept of Operations 1
2. {State} and County Functions and Responsibilities 8
3. Agreements in Planning Effort 8
4. Continuous Coverage 9

Section B: Emergency Response Organization

1. On-Shift Emergency Response Organization Assignments 1
2. Authority Over the Emergency Response Organization 2
3. Criteria for Assuming Command and Control (Succession) 3
4. Non-Delegable Responsibilities 4
5. Emergency Response Organization Positional Responsibilities 5
6. Emergency Response Organization Block Diagram 33
7. Corporate Emergency Response Organization 33
8. Industry/Private Support Organizations 33
9. Supplemental Emergency Assistance to the ERO 36

Section C: Emergency Response Support and Resources

1. Federal Response Support and Resources 1
2. Liaisons 1
3. Radiological Laboratories 1
4. Other Assistance 2

Section D: Emergency Classification System

1. Emergency Classification System 1
2. Emergency Action Levels 5
3. Offsite Classification Systems 6
4. Offsite Emergency Procedures 6

Table of Contents

Section **Page**

Section E: Notification Methods and Procedures

1. Bases for Emergency Response Organization Notification 1
2. Notification and Mobilization of Emergency Response Personnel 1
3. Initial Notification Messages 3
4. Follow-up Messages 4
5. {State} and County Information Dissemination 5
6. Notification of the Public 5
7. Messages to the Public 6

Section F: Emergency Communications

1. Communications/Notifications 1
2. Medical Communications ..... 3~~3~~2
3. Communications Testing ..... 4~~4~~2

Section G: Public Education and Information

1. Public Information Publication ..... 1~~1~~2
2. Public Education Materials ..... 1~~1~~2
3. Media Accommodations 2
4. Coordination of Public Information ..... 3~~3~~2
5. Media Orientation ..... 3~~3~~2

Section H: Emergency Facilities and Equipment

1. Control Room, Technical Support Center, and Operations Support Center ..... 1~~1~~2
2. Emergency Operations Facility (EOF) 4
3. Emergency Operations Centers ..... 5~~5~~2
4. Activation ..... 5~~5~~2
5. Monitoring Equipment Onsite ..... 5~~5~~2
6. Monitoring Equipment Offsite ..... 9~~9~~2
7. Offsite Monitoring Equipment Storage ..... 10~~10~~2
8. Meteorological Monitoring ..... 10~~10~~2
9. OSC Capabilities ..... 10~~10~~2
10. Facility and Equipment Readiness ..... 11~~11~~2
11. General Use Emergency Equipment ..... 11~~11~~2
12. Collection Point for Field Samples ..... 11~~11~~2

Table of Contents

Section **Page**

Section I: Accident Assessment

1. Plant Parameters and Corresponding Emergency Classification ..... 1~~12~~
2. Onsite Accident Assessment Capabilities ..... 1~~12~~
3. Source Term Determination ..... 1~~12~~
4. Effluent Monitor Data and Dose Projection ..... 3~~32~~
5. Meteorological Information ..... 4~~42~~
6. Unmonitored Release ..... 4~~42~~
7. Onsite and Offsite Monitoring ..... 4~~42~~
8. Monitoring Teams ..... 4~~42~~
9. Iodine Monitoring ..... 5~~52~~
10. Dose Estimates ..... 5~~52~~
11. {State} Monitoring Capabilities ..... 5~~52~~

Section J: Protective Response

1. Notification of Onsite Personnel ..... 1~~12~~
2. Evacuation Locations ..... 1~~12~~
3. Radiological Monitoring of Evacuees ..... 1~~12~~
4. Evacuation 2
5. Accountability 2
6. Provisions for Onsite Personnel ..... 3~~32~~
7. Mechanism for Implementing Protective Action Recommendations ..... 3~~32~~
8. Evacuation Time Estimates (ETEs) ..... 4~~42~~
9. Capability of Implementing Protective Action Recommendations ..... 4~~42~~
10. Implementation of Protective Action Recommendations ..... 4~~42~~
11. Ingestion Pathway Protective Measures ..... 6~~62~~
12. Monitoring of Evacuees ..... 6~~62~~

Section K: Radiological Exposure Control

1. Emergency Exposure Guidelines ..... 1~~12~~
2. Emergency Radiation Protection Program 2
3. Personnel Monitoring 2
4. Non-Licensee Personnel Exposure Authorization ..... 3~~32~~
5. Contamination and Decontamination ..... 3~~32~~
6. Contamination Control Measures ..... 3~~32~~
7. Decontamination of Relocated Personnel ..... 4~~42~~

Section L: Medical and Public Health Support

1. Offsite Hospital and Medical Services ..... 1~~12~~
2. Onsite First Aid Capability ..... 1~~12~~
3. Medical Service Facilities 2
4. Medical Transportation 2

Table of Contents

Section **Page**

Section M: Reentry and Recovery Planning

1. Reentry and Recovery ..... 1~~1~~2
2. Recovery Organization ..... 4~~4~~2
3. Recovery Phase Notifications ..... 7~~7~~2
4. Total Population Exposure ..... 7~~7~~2

Section N: Drill and Exercise Program

1. Exercises ..... 1~~1~~2
2. Drills ..... 3~~3~~2
3. Conduct of Drills and Exercises ..... 4~~4~~2
4. Critique and Evaluation ..... 5~~5~~2
5. Resolution of Drill and Exercise Findings ..... 5~~5~~2

Section O: Emergency Response Training

1. Assurance of Training ..... 1~~1~~2
2. Functional Training of the ERO ..... 1~~1~~2
3. First Aid Response 2
4. Emergency Response Organization Training Program 2
5. General, Initial, and Annual Training Program Maintenance ..... 6~~6~~2

Section P: Responsibility for the Maintenance of the Planning Effort

1. Emergency Preparedness Staff Training ..... 1~~1~~2
2. Authority for the Emergency Preparedness Effort ..... 1~~1~~2
3. Responsibility for Development and Maintenance of the Plan ..... 1~~1~~2
4. Emergency Plan and Agreement Revisions ..... 4~~4~~2
5. Emergency Plan Distribution ..... 5~~5~~2
6. Supporting Emergency Response Plans ..... 5~~5~~2
7. Implementing and Supporting Procedures ..... 5~~5~~2
8. Cross Reference to Planning Criteria ..... 6~~6~~2
9. Audit/Assessment of the Emergency Preparedness Program ..... 6~~6~~2
10. Maintenance of Emergency Telephone Directory ..... 6~~6~~2

Table of Contents

Section **Page**

Part III: APPENDIXES

Appendix 1: References 1-1

Appendix 2: Procedure Cross-Reference to NUREG-0654 2-1

Appendix 3: Letters of Agreement (Certification Letters) 3-1

Appendix 4: Glossary of Terms and Acronyms 4-1

Appendix 5: Evacuation Time Estimates 5-1

LIST OF ANNEXES

The Unit Annexes subject to the requirements of this plan are as follows:

{Calvert Cliffs Nuclear Power Plant Unit 3} Emergency Response Plan Annex

Part I: Introduction

A: Purpose

As required in the conditions set forth by the Nuclear Regulatory Commission (NRC) for the operating licenses for the {Calvert Cliffs Nuclear Power Plant Unit 3} (referred to as {CCNPP Unit 3}) the management of {Calvert Cliffs 3 Nuclear Project and UniStar Nuclear Operating Services (i.e., the Licensee)} recognizes its responsibility and authority to operate and maintain the nuclear power plant in such a manner as to provide for the safety of the general public. This document describes the { Calvert Cliffs 3 Nuclear Project and UniStar Nuclear Operating Services} Nuclear Plant Emergency Preparedness Program. The philosophy that guides the development and maintenance of this program is the protection of the health and safety of the general public in the communities around the nuclear power plant(s) and the personnel who work at the plant.

The {CCNPP Unit 3} Emergency Response Plan (E-Plan) establishes the concepts, evaluation and assessment criteria, and protective actions that are necessary in order to limit and mitigate the consequences of potential or actual radiological emergencies. It has been prepared to establish the procedures and practices for management control over unplanned or emergency events that may occur at {CCNPP Unit 3}. It also provides the necessary pre-arrangements, directions and organization so that all nuclear emergencies can be effectively and efficiently resolved.

The { Calvert Cliffs 3 Nuclear Project and UniStar Nuclear Operating Services} Emergency Preparedness Program consists of the E-Plan, {Unit 3 Annex}, E-Plan Implementing Procedures {(ERPIPs)}, and associated program administrative documents. The Licensee E-Plan outlines the basis for response actions that would be implemented in an emergency. This document is not intended to be used as a procedure.

In order to minimize the number of ad-hoc decisions made during an emergency and to ensure that necessary equipment, supplies, and essential services are available to meet the needs of an emergency, the Licensee has developed this Emergency Plan. This Emergency Plan is applicable to {CCNPP Unit 3} operated by UniStar Nuclear Operating Services and considers the consequences of radiological emergencies, as required by 10 CFR 50, Paragraph 50.47 and Appendix E.

In addition, this plan addresses guidance and adheres to the intent of the criteria established and provided within NUREG-0654 which is a joint NRC and Department of Homeland Security (FEMA) document. Regulatory Guide 1.101, “Emergency Planning and Preparedness for Nuclear Power Reactors,” endorses the criteria and recommendations in NUREG-0654/FEMA-REP-1, Rev. 1, as methods acceptable to the NRC staff for complying with the standards in 10 CFR 50.47.

This plan also addresses the requirements of the Commission Orders of February 25, 2002, relating to security events.

The Emergency Plan also considers the consequences of non-radiological emergencies.

The Unit Annex contains information and guidance that is unique to the U.S. EPR unit. The annex addresses unit-specific criteria, including:

- Unit Description

- Emergency Action Levels (EALs),
- Deviations from the E-Plan (such as unit specific on-shift staffing, unique aspects of Emergency Response Organization (ERO) augmentation, and so forth).
- Unit specific emergency response capabilities, such as specific equipment or facilities available for use by the ERO.

The Unit Annex becomes a part of the plan and is subject to the same review and audit requirements as the plan. In the areas where a Unit Annex deviates from the general requirements of the E-Plan, the Unit Annex shall serve as the controlling document.

Detailed E-Plan implementing procedures are maintained separately and are used to guide those responsible for implementing emergency actions.

B: Background

Facility Description

{The CCNPP Site consists of ~~2108~~ 2070 acres of land in Lusby, Maryland. It is located approximately 10.5 miles southeast of Prince Frederick, Maryland and 4.5 miles northwest of Cove Point, Maryland. The site is located at latitude N 38 degrees, 26 minutes, 4 seconds and longitude S 76 degrees, 26 minutes, 31 seconds. Two 850 MWe Combustion Engineering pressurized water reactors (2 loop) and one (1)1650 MWe {AREVA} Evolutionary Power Reactor (EPR) pressurized water reactor (4 loop) are located on the site. Cooling water is provided by the Chesapeake Bay. Supporting office and process buildings; including a life-of-plant Independent Spent Fuel Storage Facility (ISFSF) are also located on the site.}

Figure 1-1 shows the general location of each unit at the {CCNPP} site. More specific information on unit siting may be found in the Final Safety Analysis Report or the Updated Final Safety Analysis Reports (which ever is appropriate for units governed by this plan, hereafter referred to as the FSAR).

Emergency Planning Zone

The plume exposure Emergency Planning Zone (EPZ) for {CCNPP Unit 3} shall be an area surrounding the Site with a radius of about ten miles (16 kilometers). (Exact boundaries are determined in concurrence with {state} and local authorities). Refer to Figure 1-2.

The ingestion pathway EPZ for {CCNPP Unit 3} shall be an area surrounding the Site with a radius of about 50 miles (80 kilometers). Refer to Figure 1-3.

The primary hazard consideration at nuclear power plants is the potential unplanned release of radioactive material resulting from an accident. The probability of such a release is considered very low due to plant design and strict operational guidelines enforced by the NRC. Not withstanding, federal regulations require that a sound emergency preparedness program exist for each commercial nuclear power plant. A detailed description of the site is given in the Final Safety Analysis Report (FSAR).

C: Scope

This document describes actions to be taken in the event of a radiological accident at {CCNPP Unit 3} that may impact the health and safety of the general public or site employees. It also serves to limit the damage to facilities and property, and provide for the restoration of such facilities in the event of an emergency. If such an accident were to occur, the ERO would be put in place and maintained until such time where the plant is returned to a stable condition and the threat to the general public or site personnel no longer exists. This plan describes the functions and operation of the ERO, including assignments of authority and responsibility. It does not, nor is it intended to, provide guidance for actual plant equipment manipulations. These instructions are contained in site-specific normal and emergency operating procedures as required by Technical Specifications and other regulatory guidance. The E-Plan provides for: identification and evaluation of emergency situations, protective measures, communications, coordination and notification of governmental authorities, document review and control, emergency preparedness assessment, and training of all emergency personnel. An emergency recovery phase is also described in this plan.

D: Planning Basis

The E-Plan, in conjunction with the Unit Annex and implementing and administrative procedures, documents the methods by which the {CCNPP Unit 3} Emergency Preparedness Program meets the planning standards set forth in 10 CFR 50.47(b) and the requirements of 10 CFR 50 Appendix E. Development of the E-Plan was based on NUREG-0654/FEMA-REP-1, Revision 1, "Criteria for Preparation and Evaluation of Radiological Emergency Response Plans and Preparedness in Support of Nuclear Power Plants."

Acceptable alternate methods, which deviate from NUREG-0654, are allowed under Regulatory Guide 1.101, “Emergency Planning and Preparedness for Nuclear Power Reactors.” However, deviations will be documented in the Unit Annex and evaluated as continuing to meet the Planning Standards of 10 CFR 50.47(b) and Appendix E to 10 CFR 50 under the 10 CFR 50.54(q) process to ensure the continued effectiveness of {CCNPP Unit 3} E-Plan and Unit Annex.

Other applicable regulations, publications, and guidance were used (see Appendix 1, "References") along with site-specific documents to ensure consistency in the planning effort.

E: Contiguous-Jurisdiction Emergency Planning

The E-Plan recognizes the {state}, in cooperation with the local EPZ communities, as the overall authority responsible for protective action directives in order to protect the health and safety of the general public.

F: Integrated Guidance and Criteria

Federal, {State} and local (county, city and/or town level) emergency response plans are developed in conjunction with this plan to ensure a consistent and integrated response to a classified event.

G: Funding and Technical Assistance

The Licensee is dedicated to providing the level of support necessary, as dictated by federal regulation, to ensure appropriate integration of the {state}, local, and licensee radiological emergency preparedness programs.

H: Emergency Response Organization

The Licensee acknowledges its primary responsibility for planning and implementing emergency measures within the site boundary and for overall plant accident assessment. These emergency measures include corrective actions, protective measures, and aid for personnel onsite. To accomplish these responsibilities, the Licensee has established an Emergency Response Organization (ERO) which will be mobilized to provide the initial response to an event. In addition advance arrangements have been made with offsite organizations for special emergency assistance such as ambulance, medical, hospital, fire, and police services.

In the longer time frame, a framework for a Recovery Organization is set forth in this plan. It is recognized that the normal site organization will be utilized for much of the recovery effort, with additional resources identified at the time of the event.

I: Federal Response

Provisions are made within the E-Plan for the integration of appropriate elements of the federal assistance activities. Arrangements have been made to accommodate a federal response organization presence in the {CCNPP Unit 3} emergency response facilities as well as support communications between licensee and federal emergency facilities. NRC response as described in NUREG-0728, Rev. 4, "NRC Incident Response Plan (IRP)", was used in the development of the E-Plan as guidance to ensure coordination between the {CCNPP Unit 3} ERO and NRC EROs.

J: Form and Content of Plan

As required by federal regulations, the E-Plan is governed by and contained (or referenced) in the unit(s) FSAR. The E-Plan is administratively maintained as a separate document. The E-Plan has been formatted similar to NUREG-0654/FEMA-REP-1, Revision 1, "Criteria for Preparation and Evaluation of Radiological Emergency Response Plans and Preparedness in Support of Nuclear Power Plants." The use of this format lends itself to uncomplicated comparison with the criteria set forth in NUREG-0654/FEMA-REP-1.

Appendix 2, "Procedure Cross-Reference to NUREG-0654," provides a cross-reference between the NUREG-0654 evaluation criteria and the E-Plan implementing procedures and applicable administrative documents. Appendix 2 also references other regulatory guidance used in development of this plan.

Required Content of the Unit Annexes

Information that is in the plan need not be restated in the Annex. The Annex shall address unit specific details or any differences from main body of plan. Annexes may be used for co-located units of different designs or non-co-located units operated by the Licensee.

Annex Format and Specific Content: As a minimum, Unit Annexes shall address the areas described as follows:

1. Section 1: Introduction

   The unit description and any surrounding area differences are described by the inclusion of maps, drawings and/or diagrams. A summary statement describes the Annex's interface with the Emergency Plan.

2. Section 2: Organizational Control of Emergencies

   Unit specific differences from the Emergency Plan, such as on-shift staffing or ERO augmentation, shall be outlined. Unit-specific position titles, corresponding to the position titles used in this Emergency Plan shall also be provided, if not standard across the site.

3. Section 3: Classification of Emergencies

   Unit specific EALs are included for all emergency classes for the purpose of event classification.

4. Section 4: Emergency Response Facilities and Equipment

   Unit specific emergency response facilities and equipment and instrumentation for emergency assessment are provided if not shared by all units at the site.

5. Section 5: Emergency Measures

   Unit specific assembly areas and egress routes are provided if not shared by all units at the site.

Additional section(s) may be added if additional areas are unit specific.

Figure 1-1, Map of Site and Surrounding Area

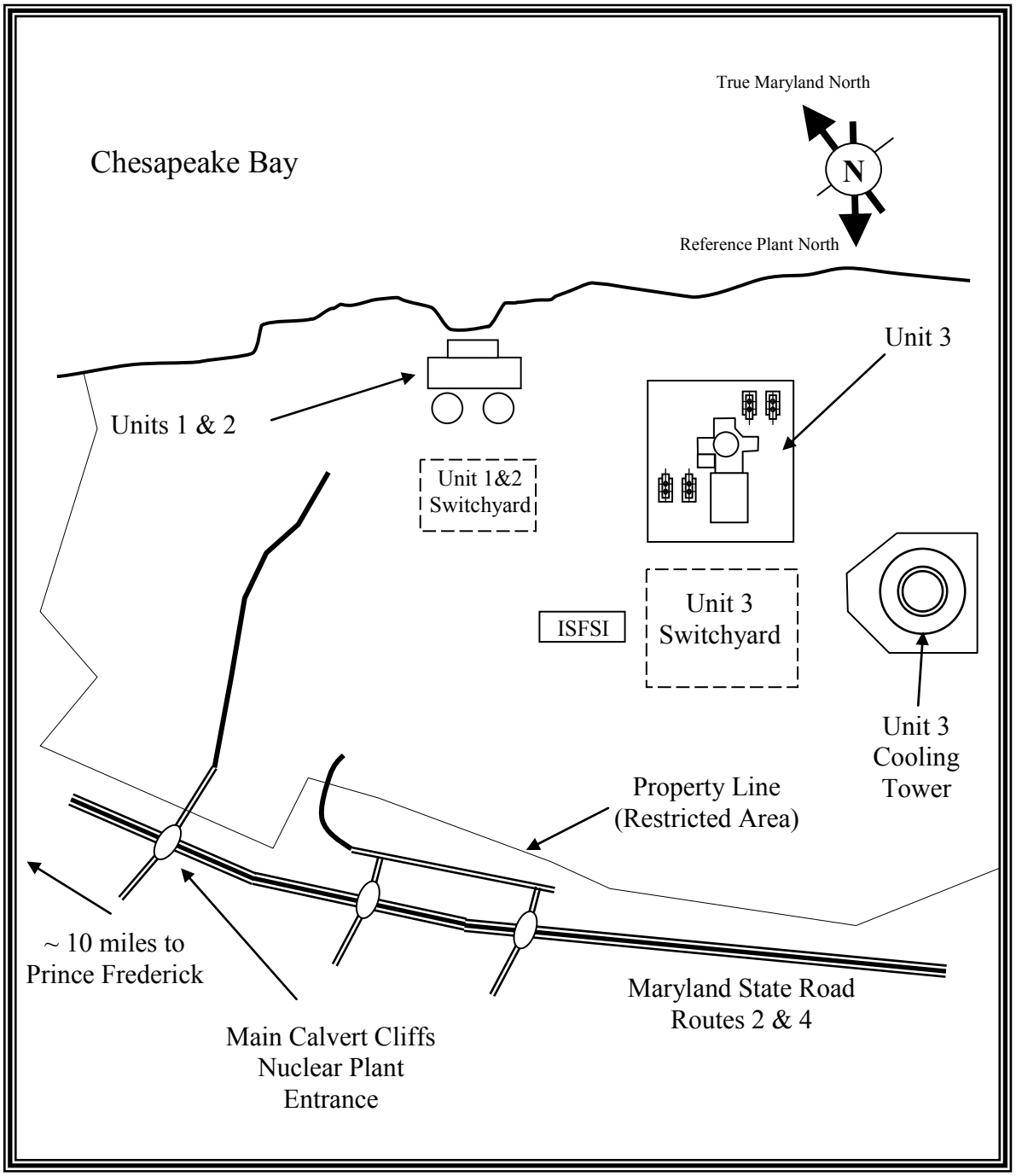

Figure 1-2, 10-Mile (16 Kilometer) Emergency Planning Zone

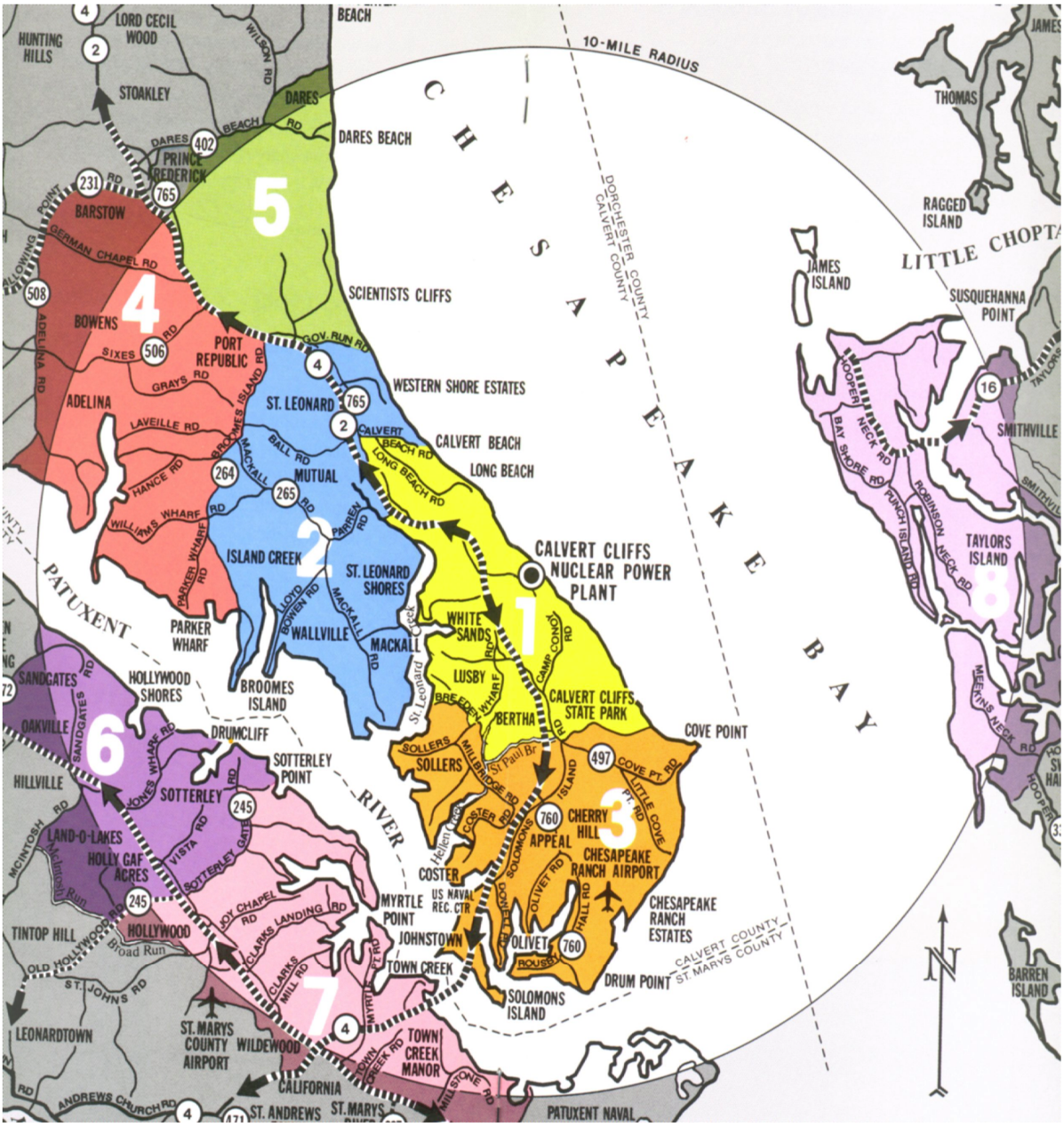

Figure 1-3, 50-Mile (80 Kilometer) Emergency Planning Zone

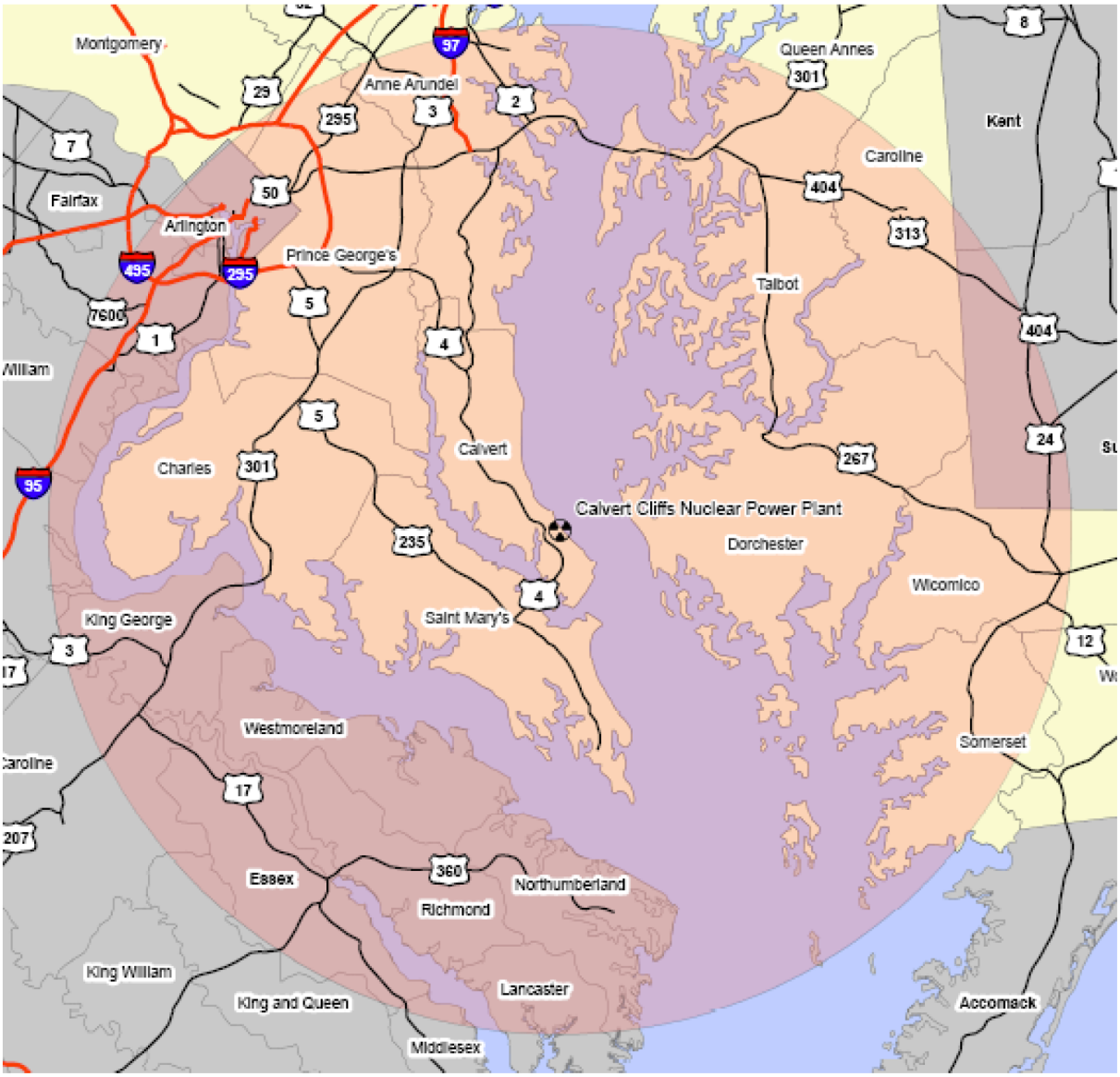

PART II: Planning Standards And Criteria

Section A: Assignment of Responsibility

This section describes the primary responsibilities and organizational control of licensee, federal, {state}, local, and other emergency response organizations within the Plume Exposure Pathway and the Ingestion Pathway Emergency Planning Zones (EPZs). Various supporting organizations are also described as well as staffing for initial and continuous response.

1. Concept of Operations

The relationships and the concept of operations for the organizations and agencies that are a part of the overall ERO are as follows:

a. Identified below are federal, {state}, and local organizations (and other local governmental agencies) that are involved in a response to an emergency at {CCNPP Unit 3}.

1) Federal Agencies: The National Response Plan (NRP), Nuclear/Radiological Incident Annex outlines the statutory and regulatory responsibilities. The primary federal response for supporting an emergency at {CCNPP Unit 3} includes:

a) Nuclear Regulatory Commission (NRC): The NRC is responsible for licensing and regulating nuclear facilities and materials and for conducting research in support of the licensing and regulatory process. These responsibilities include protecting the public health and safety, protecting the environment, protecting and safeguarding materials and plants in the interest of national security and assuring conformity with antitrust laws.

The NRC Regional Office has the responsibility for auditing of nuclear power plants. It is responsible for ensuring that such activities are conducted in accordance with the terms and conditions of such NRC licenses and that as a result of such operations, there is no undue risk to the health and safety of the public.

The NRC Office of Nuclear Reactor Regulation, established by the Energy Reorganization Act of 1974, as amended, performs licensing functions associated with the construction and operation of nuclear reactors and with the receipt, possession, ownership, and use of special nuclear and byproduct materials used at reactor facilities.

With regard to emergency preparedness, the NRC shall:

- Assess licensee emergency plans for adequacy;
- Review the Federal Emergency Management Agency (FEMA) findings and determinations on the adequacy and capability of implementation of {state} and local plans; and
- Make decisions with regard to the overall state of emergency preparedness and issuance of operating licenses.

The NRC shall respond to incidents at licensed facilities or vehicular accidents involving licensed materials, including radionuclides, in transit. The NRC shall act as the lead Federal agency with regard to technical matters during a nuclear incident including radiological assistance. The NRC shall be prepared to recommend appropriate protective actions for the public and technical actions to the licensee. FEMA shall act as the lead Federal agency for offsite, non-technical concerns.

During an incident, the Chairman of the Commission is the senior NRC authority for all aspects of a response. The Chairman shall transfer control of emergency response activities to the Director of Site Operations when deemed appropriate by the Chairman.

All NRC Regions as well as Headquarters are prepared to respond to potential emergencies. All Regions and Headquarters have developed plans and procedures for responding to radiological incidents involving NRC licensees. Headquarters has developed the NRC Incident Response Plans and Implementing Procedures. Each NRC Region has developed Regional Supplements that detail how the Region will fulfill all of the responsibilities assigned in the NRC Incident Response Plan. All NRC organizations are responsible for maintaining an effective state of preparedness through periodic training, drills and exercises.

Each Region and Headquarters has established and maintains an Incident Response Center designed to centralize and coordinate the emergency response function. Adequate communications are established to link the licensee, Headquarters and the Region. The NRC has established lines of communications with local government, {state} government, other Federal agencies, Congress and the White House. Public information will be disseminated in a timely manner and periodically.

Each Region is prepared to send a team of qualified specialists to the scene expediently. All of the necessary supplies and equipment needed for emergency response will be provided and maintained by the NRC.

The NRC Incident Response Plan objectives are to provide for protection of the public health and safety, property, and the environment, from the effects of radiological incidents that may occur at licensed facilities or which involve licensed materials, including radio-nuclides in transit.

The objectives of the agency plan set forth the organizational and management concepts and responsibilities needed to assure that NRC has an effective emergency response program.

The plan is intended to ensure NRC preparedness:

- To receive and evaluate notification information of incidents, accidents and unusual events and determine the extent of NRC response necessary to meet NRC responsibilities for mitigating the consequences of these events;
- To determine the cause of incidents, accidents, and unusual events in order to ensure that appropriate corrective actions are taken by the licensee to minimize the consequences of these events;
- To provide onsite expertise in a timely manner, to evaluate the nature and extent of the incident, ascertain plant status (for reactors and fuel facilities), monitor licensee activities, determine compliance, make recommendations, and, if necessary, issue orders relative to the event;
- To inform the public and others of plant status and technical details concerning the incident;
- To recommend adequate protective actions to the responsible local and/or {state} agencies;
- To provide technical assistance;
- To ensure the plant is returned to a safe condition; and
- To return the NRC Headquarters and Regional office to normal operations.

b) Department of Homeland Security (DHS): Per the National Response Plan (NRP), DHS is responsible for the overall coordination of a multi-agency Federal response to a significant radiological incident. The primary role of DHS is to support the {state} by coordinating the delivery of Federal non-technical assistance. DHS coordinates {state} requests for Federal assistance, identifying which Federal agency can best address specific needs. If deemed necessary by DHS, it will establish a Federal Response Center from which it will manage its assistance activities.

Federal Emergency Management Agency (FEMA): FEMA is the agency within DHS which provides direct support to state and local agencies in emergency response.

c) Federal Radiological Preparedness Coordinating Committee (FRPCC): The FRPCC consists of FEMA, which chairs the Committee, the Nuclear Regulatory Commission, the Environmental Protection Agency, the Department of Health and Human Services, the Department of Energy, the Department of Transportation, the Department of Defense, the Department of Agriculture, the Department of Commerce, and where appropriate and on an ad hoc basis, other Federal departments and agencies. The FRPCC shall assist FEMA in providing policy direction for the program of Federal assistance to state and local governments in their radiological emergency planning and preparedness activities.

d) U.S. Department of Energy (DOE): The Department of Energy (DOE) has extensive radiological monitoring equipment and personnel resources that it can assemble and dispatch to the scene of a radiological incident. The Department of Energy (DOE) local operations office can assist {CCNPP Unit 3} following a radiological incident as outlined in the Federal Radiological Monitoring and Assessment Plan (FRMAP). If {CCNPP Unit 3}, the NRC or the affected states deem that assistance from DOE is necessary or desirable, the affected state(s) would notify the appropriate DOE operations office.

e) Environmental Protection Agency (EPA): Assists with field radiological monitoring/sampling and non-plant related recovery and reentry guidance.

f) The U.S. Coast Guard (USCG): The USCG patrols and ensures the safety of navigable waterways in the United States. The USCG is promptly notified of any oil or hazardous substance discharges into rivers or lakes or radioactive contamination of rivers or lakes under its jurisdiction at levels requiring assistance to effect protective actions. The USCG is contacted by the appropriate {state} agencies in the event of an incident at an applicable nuclear power plant. The USCG is responsible for officially closing the waterways to all commercial traffic. Refer to the {Maryland State Plan}.

g) U.S. Army Corps of Engineers: The U.S. Army Corps of Engineers control barge and boat traffic at locks and dams on navigable waterways in the United States. The Corps of Engineers will be contacted by the appropriate {state} agencies in the event of an incident at an applicable nuclear power plant. The Corps will be responsible for closing their locks and dams to all waterway traffic leading to the affected area, allowing only traffic leaving the area. Refer to the appropriate {Maryland State Plan}.

h) Federal Bureau of Investigation (FBI): Support from the FBI is available through its statutory responsibility based in Public Law and the US code, and through a memorandum of understanding for cooperation with the NRC. Notification to the FBI of emergencies in which they would have an interest will be through provisions of the site's Nuclear Security Plan, or by the NRC.

i) National Weather Service (NWS): Provides meteorological information during emergency situations, if required. Data available will include existing and forecasted wind directions, wind speed, and ambient air temperature.

j). Department Of Energy (DOE): Radiation Emergency Assistance Center/Training Site (REAC/TS): DOE REAC/TS provides services of medical and health physics support. REAC/TS advise on the health physics aspects of situations requiring medical assistance.

2) {State} Agencies

a) {The State of Maryland The State of Maryland has the statutory responsibility and authority for protecting the health and safety of the public in Maryland. The State has developed the Maryland Radiological Emergency Plan. This plan was developed in accordance with the guidance suggested by NUREG 0396 and NUREG 0654/FEMA-REP-1, Rev. 1. The Maryland Plan has received 44 CFR 350 unconditional approvals from FEMA for all nuclear generating plant(s) within the state boundaries. Maryland Radiological Emergency Plan, Annex Q, describes State and local agency roles and interfaces for carrying out protective and parallel actions in a 10-mile-radius plume zone and 50-mile-radius ingestion zone from CCNPP Unit 3 site. Basic descriptions for the {Maryland} State agencies responsible for actions during an event at a nuclear power plant are as follows:

- Governor of Maryland: The Governor of the State has overall command authority for both the radiological and non-radiological aspects of a nuclear incident. The Governor shall make the final recommendation for protective actions with input from the Secretary - Maryland Department of Environment (MDE) and shall serve as the state's primary spokesperson.

- Maryland Emergency Management Agency (MEMA): Coordinates the operational response and recovery functions of all State, private, and Federal agencies. MEMA directs County requests for assistance to appropriate State and Federal agencies.

- Maryland Department of the Environment (MDE): Proposes Protective Action Decisions (PADs) to the Secretary – Department of the Environment.

  MDE has both the command authority for radiological aspects of a nuclear incident and the responsibility for performing various radiological functions. These functions include milk, water and food control, radiation exposure control for state emergency workers, and confirmatory accident assessment.

For events that impact the CCNPP' 50-mile (80-kilometer) ingestion pathway, MDE will coordinate technical information with the other states which may be impacted.}

b) {The State of Delaware: A portion of the 50-mile (80-kilometer) Ingestion Pathway Emergency Planning Zone for CCNPP Unit 3 lies within the State of Delaware. The State{state} of Delaware has developed a Radiological Emergency Plan outlining necessary response actions.

c) The Commonwealth of Virginia: A portion of the 50-mile (80-kilometer) Ingestion Pathway Emergency Planning Zone for CCNPP Unit 3 lies within the Commonwealth of Virginia. The Commonwealth of Virginia has developed a Radiological Emergency Response Plan outlining necessary response actions.

d) The District of Columbia: A portion of the 50-mile (80-kilometer) Ingestion Pathway Emergency Planning Zone for CCNPP Unit 3 lies within the District of Columbia. The District of Columbia has developed a Emergency Plan outlining necessary response actions.

e) Essential elements of the 50-Mile Plume Exposure emergency plans: Initially, responsibility for responding to a radiological emergency, including evacuation, rests with local governments and their emergency services. Notification, by either local authorities or legal possessors of uncontrolled materials, to the state EMA that a radiological emergency exists will bring in the resources of other state agencies to assess and evaluate the situation and determine protective actions. State agency notification for assistance and coordination of response operations of the state agencies in support of local government will be performed by the MDE}.

3) {County} Government Agencies

{CCNPP Unit 3} and the surrounding communities that comprise the Plume Exposure Pathway EPZs have developed integrated emergency response programs that call upon the resources of their community. The community organizations are responsible for implementing and coordinating the community response to an emergency.

{Calvert County, Dorchester County, and St. Mary's County} are within the 10 mile Emergency Planning Zone for {CCNPP Unit 3}.

The County Emergency Operations Centers (EOCs) serve as the primary coordinating center for local government response within the county's jurisdiction and for coordination between counties.

b. During an emergency condition classified as an Alert, Site Area Emergency, or General Emergency, the Site's ERO replaces the normal plant organization. The ERO consists of three major response sub-organizations:

1) The Plant Organization, directed by the {Emergency Plant Manager} provides for:

- Control and operation of the plant.
- Mitigation of the emergency condition.
- Protection of site personnel.
- Emergency event classification.
- Notification of the appropriate individuals and agencies prior to EOF taking Command and Control.
- Emergency support for operations, engineering, maintenance, fire fighting, material acquisition, security, and first aid.

The Plant Organization is made up primarily of personnel from the sites day to day management team, Department Heads, Operations, Health Physics, Chemistry, Engineering, Maintenance, Security and other site support personnel.

2) The Offsite Organization, directed by the {Emergency Director} provides for:

- Emergency notifications to Federal, {state} and local agencies.
- Offsite radiological accident assessment and Protective Action Recommendations to offsite authorities.
- It serves as the primary interface between {CCNPP Unit 3} and outside organizations responsible for the protection of the public.
- Obtaining offsite support for the plant organization needed to mitigate effects of event.

The Offsite Organization is made up primarily of personnel from the site and Corporate Management.

3) The Public Information Organization, directed by the {Company Spokesperson}, coordinates with public information officers from other organizations to provide information to the public through the news media.

c. Interrelationships between major Licensee organizations and sub-organizations in the total response effort are illustrated in a block diagram in Figures A-1 and A-2. For a more detailed diagram of the ERO, see Figures B-1a to B-1d.

d. The {Emergency Director} is a senior Licensee employee with overall responsibility for coordinating emergency response actions in support of the site, the Emergency Public Information Organization, and affected {state}(s) and local agencies. The senior operations person on shift serves as the {Interim Emergency Director} until relieved by the {Emergency Plant Manager} or the on call {Emergency Director}.

e. Procedures for training and maintenance of the emergency organization are in place to ensure 24-hour per day staffing for emergency response, including established communication links.

2. {State} and County Functions and Responsibilities

The {state} and counties have emergency response plans that specify the responsibilities and functions for the major agencies, departments, and key individuals of their emergency response organizations. This information is located in their respective plans.

3. Agreements in Planning Effort

Written agreements establishing the concept of operations developed between the Licensee and other support organizations having an emergency response role within the EPZs have been developed. These agreements identify the emergency measures to be provided, the mutually accepted criteria for implementation, and the arrangements for exchange of information. Agreement letters are not necessary with Federal Agencies who are legally required to respond based on Federal law; however, agreements are necessary if the agency was expected to provide assistance not required by law. Letters of Agreement with private contractors and others who provide services in support the site shall be obtained. Letters of Agreement is provided in Appendix 3 of this E-Plan. Letters of Agreement, as a minimum, state that the cooperating organization will provide their normal services in support of an emergency at the affected site. A contract/purchase order with a private contractor is considered acceptable in lieu of a Letter of Agreement for the specified duration of the contract.

In addition to the specific agreements listed in Appendix 3, general agreements between members of the nuclear industry and government agencies exist. These agreements are used to coordinate emergency response efforts for a major event.

4. Continuous Coverage

{CCNPP Unit 3} maintains a 24-hour emergency response capability. The normal on-shift complement provides the initial response to an emergency. This group is trained to handle emergency situations (e.g. initiate implementation of the E-Plan, make initial accident assessment, emergency classification, notifications, communications, and protective action recommendations) until the augmented ERO arrives. The ERO is composed of a broad spectrum of personnel with specialties in operations, maintenance, engineering, radiochemistry, health physics, material control, fire protection, security, and emergency planning and are available and trained to augment on-shift personnel in an emergency. Procedures for training and maintenance of the emergency organization are in place to provide the capability of continuous (24-hour) operations.

The {Emergency Director}, located in the EOF, has the authority and responsibility for assuring continuity of resources (technical, administrative, and material) in the event of the activation of the ERO.

Figure A-1: Licensee Emergency Response Organization Interrelationships

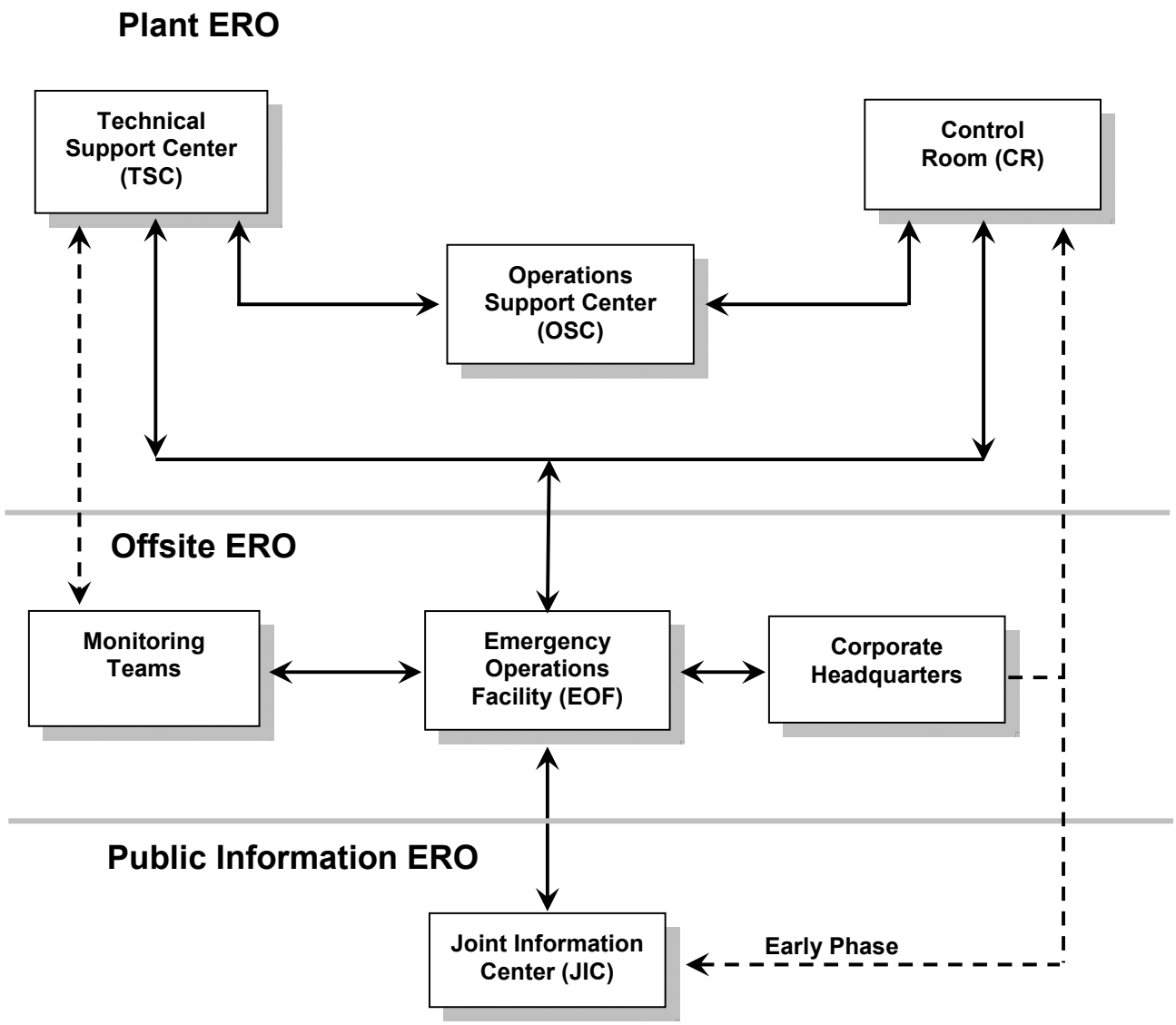

Figure A-2: Agency Response Organization Interrelationships

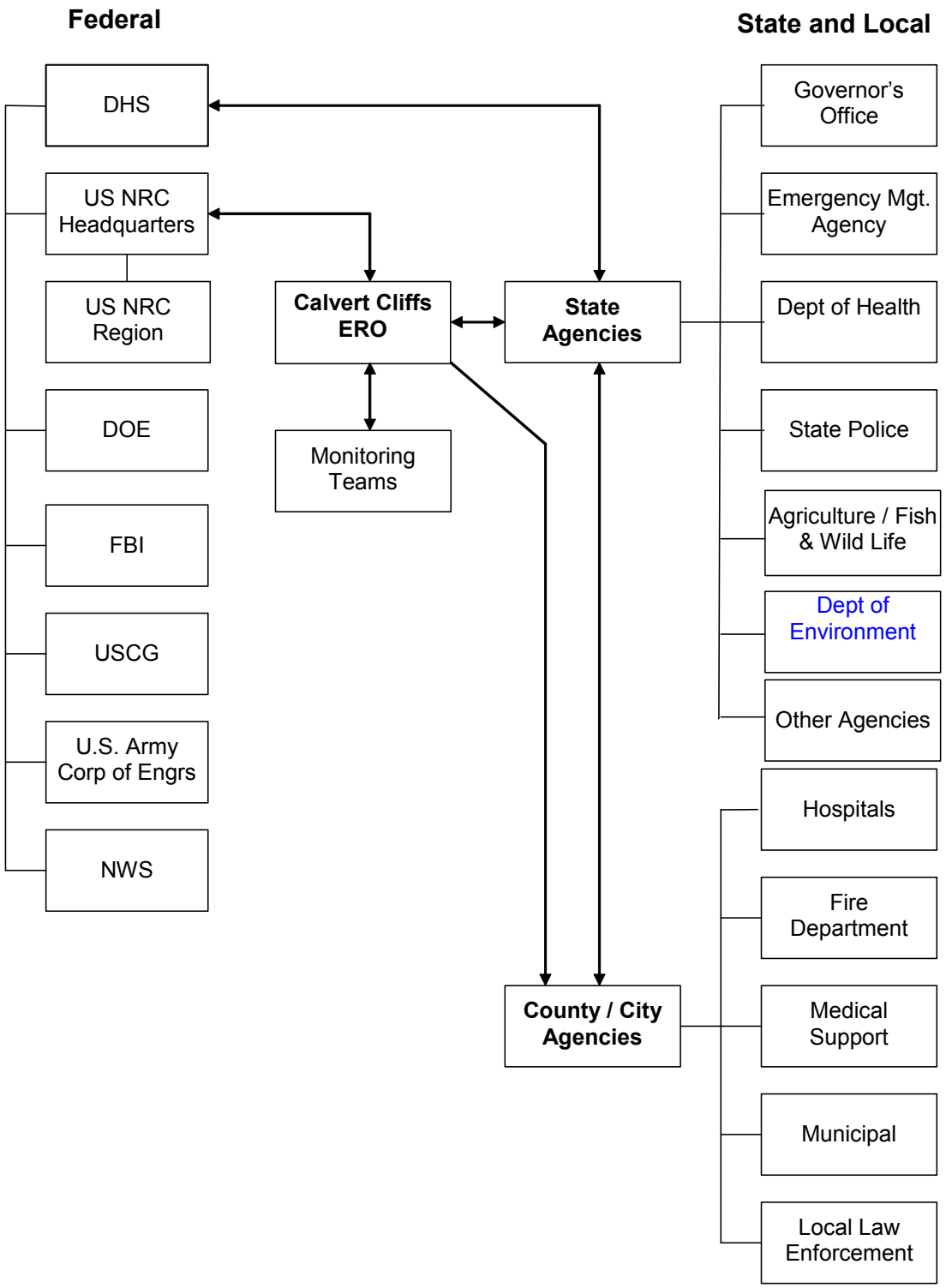

Section B: Emergency Response Organization

This section describes the {CCNPP Unit 3} Emergency Response Organization (ERO), its key positions and associated responsibilities. It outlines the staffing requirements which provide initial emergency response actions and provisions for timely augmentation of on-shift personnel when required. It also describes interfaces among {CCNPP'} emergency response personnel and specifies the offsite support available to respond to the nuclear generating stations.

1. On-Shift Emergency Response Organization Assignments

The normal plant personnel complement is established with the Site Vice President having overall authority for site operations. The Site Vice President directs the site organization in the management of the various departments while the {Shift Supervisor} retains the responsibility for actual operation of plant systems. Emergency Preparedness must consider the capabilities of the normal plant organization, the Licensee Offsite Emergency Response Organizations, and the non-Licensee Emergency Response agencies. The initial phases of an emergency situation at a nuclear site will most likely involve a relatively small number of individuals. These individuals must be capable of (1) determining that an emergency exists; (2) providing initial classification and assessment; and (3) promptly notifying other groups and individuals in the emergency organization. The subsequent phases of the emergency situation may require an increasing augmentation of the emergency organization.

The site has personnel on shift at all times that can provide an initial response to an Emergency Event. Table B-1a, contained in the {CCNPP Unit 3 Annex}, outlines the plant on-shift emergency organization and its relation to the normal staff complement. Members of the on-shift organization are trained on their responsibilities and duties in the event of an emergency and are capable of performing all response actions in an Unusual Event or the initial actions of higher classifications.

<u>On Shift Personnel</u>

Shift Personnel have the capability at all times to perform detection, mitigation, classification, and notification functions required in the early phases of an emergency. (Refer to Section A.1.b.1.) Shift augmentation and further ERO involvement will be determined by the extent and magnitude of the event. When a transition to Severe Accident Management Guidelines (SAMG) is initiated, the shift crew assumes the duties and responsibilities of the SAMG Implementers.

<u>{Shift Supervisor}:</u> While acting as {Interim Emergency Director}, will take immediate action during an emergency and will activate the Site ERO, as appropriate. In the {Shift Supervisor's} absence or incapacitation, the line of succession is defined by the Unit's Operations Procedures and {ERPIPs}.

Shift Technical Advisor (STA): A qualified individual assumes an overview role as the STA with the specific responsibility of monitoring the maintenance of core cooling and containment integrity. An individual assigned the duty as the STA shall be available to the Control Room at all times.

Control Room Operators: At least two qualified Reactor Operators are assigned to each shift. They are responsible for operating plant equipment from the Control Room.

Auxiliary Operators: At least two non-licensed operators are assigned to each shift. They are responsible for operating plant equipment throughout the plant.

Radiation Protection: The Site Radiation Protection personnel are responsible for the handling and monitoring of radioactive materials. Included in this organization are Health Physicists, Radiation Protection Supervisors and Technicians.

Chemistry: The Site Chemistry personnel are responsible for sampling of system effluents, and the chemical and radio-analytical analysis of those samples. Included in this organization are Chemists, Chemistry Supervisors and Technicians.

Security: The Site Security personnel are responsible for the physical security of the site. Included in this organization are Security Supervisors and Security Guards.

A Unit Fire Brigade is established by designating trained individuals from the above listed groups as brigade members.

An individual (or group of individuals) on each shift is trained and made available to act as the Emergency Communicator. This individual can notify site personnel, {State} and Local agencies and the NRC. The Emergency Communicator will maintain communications as necessary until relieved by members of the on-call ERO.

2. Authority over the Emergency Response Organization

The {Shift Supervisor}, {Emergency Plant Manager} or {Emergency Director} in Command and Control, is the designated {CCNPP Unit 3} individual who has overall authority and responsibility, management ability, and technical knowledge for coordinating all emergency response activities.

Control Room:	{Shift Supervisor} is initially in command until relieved by on-call ERO members.
TSC:	{Emergency Plant Manager} may relieve the {Shift Supervisor} of all Command and Control Responsibilities until the {Emergency Director} is ready to assume these duties. Maintains some unit specific command and control responsibilities even after being relieved by the {Emergency Director}.
EOF:	{Emergency Director} assumes overall command and control of the {CCNPP Unit 3} emergency response.

3. Criteria for Assuming Command and Control (Succession)

Emergency personnel assume responsibility for their positions upon receiving notification to activate. The responsibility for initial assessment of and response to an emergency rests with the {Shift Supervisor}. The {Shift Supervisor} is the {Interim Emergency Director} and has the {Emergency Director's} responsibilities and authority until relieved by a qualified {Emergency Plant Manager} or the {Emergency Director}. The {Emergency Plant Manager}, after relieved the {Shift Supervisor} of the {Emergency Director} responsibilities, is responsible for continued assessment of the severity of the emergency and overall direction of the ERO as appropriate in accordance with the guidance provided in the E-Plan, the Unit Annex and the plan emergency implementing procedures. Final succession is achieved when the {Emergency Director} assumes overall Command and Control, and directs the overall {CCNPP Unit 3} Emergency Response activities.

The {Shift Supervisor} is relieved of Command and Control as soon as possible after the declaration of an Alert (or higher classification if Alert not declared). Command and Control may be transferred directly to the {Emergency Director}, or transferred to the {Emergency Plant Manager} on an interim basis. Command and Control does not transfer until the following criteria have been met:

- Adequate staff levels are present in support of the non-delegable responsibilities.
- The staff has been fully briefed as to the status of the event and the currently proposed plan of action.
- A turnover between the individual relinquishing Command and Control and the individual assuming Command and Control has been made.

Although the {CCNPP Unit 3} ERO fulfills all regulatory requirements for emergency response, it may be altered by the {Emergency Director} or the {Emergency Plant Manager}. This type of alteration will be based upon identified needs within the ERO, event dependent criteria, and identified needs of the company as a whole to respond to the event.

4. Non-Delegable Responsibilities

Non-delegable responsibilities include the following functions:

- Event classification.
- Protective Action Recommendations (PARs) for the general public.
- Notification of offsite authorities (approval of {State}/local and NRC notifications).
- Authorization of emergency exposure controls in excess of 5 Rem (0.05 Sv) TEDE, emergency CDE thyroid exposures and the issuance of potassium iodide (KI), for the {CCNPP Unit 3} emergency workers.

The {Shift Supervisor} is responsible for the initial classification of an event and assumes the position as {Interim Emergency Director}. In this capacity, the {Shift Supervisor} has responsibility for performing the non-delegable responsibilities until relieved.

The {Emergency Plant Manager} will assume overall authority and responsibility for performing all of the non-delegable duties from the {Shift Supervisor}. The {Emergency Director} (EOF) will subsequently relieve the {Emergency Plant Manager} (TSC) of overall Command and Control and assume the non-delegable responsibilities for PAR determination and notifications to offsite authorities.

Transition of "Non-Delegable" Responsibilities

{Interim Emergency Director} (Control Room)	**{Emergency Plant Manager}** (TSC)	**{Emergency Director}** (EOF)
Classification →	Classification	
PARs →	PARs →	PARs
Notifications →	Notifications →	Notifications
Emergency Exposure Controls →	Emergency Exposure Controls (Onsite Personnel) Field Teams when directed from TSC)	Emergency Exposure Controls (EOF Field Teams when directed from EOF)

5. Emergency Response Organization Positional Responsibilities

Table B-1b outlines ERO positions required to meet minimum staffing and full augmentation of the on-shift complement at an Alert or higher classification, and the major tasks assigned to each position. The full augmentation staffing levels are used as a planning basis to cover a wide range of possible events. For extended events (one which lasts for more than 24 hours), actual staffing will be established by the {Emergency Director} based on the event and personnel availability. However, additional staffing or reduced staffing will only occur after discussion concerning the impact on plant operations and emergency response.

The overall {CCNPP Unit 3} ERO is made up of three sub organizations:

- The first is called the Plant Emergency Response Organization. It is responsible for the onsite emergency response activities. These activities include protecting plant personnel, mitigating the results of the event and keeping the offsite organization informed of onsite events and actions being taken.

- The second is called the Offsite Emergency Response Organization. It is responsible for the licensee's offsite emergency response activities. These activities include providing information to offsite authorities, monitoring offsite results of the event, supporting the onsite organization and obtaining outside resources to support emergency response efforts.

- The third is called the Public Information Emergency Response Organization. It is responsible coordinating with other Emergency Response Organizations (Federal, {State} and Local) for providing accurate information to the public about the event through the news media.

The Offsite Emergency Response Organization and the Public Information Emergency Response Organization combined may be referred to as the site Recovery Organization by {State} and local emergency plans.

Specific responsibilities for each sub-organization and related positions are as follows:

a. Plant Emergency Response Organization: The Plant ERO is the onsite group that is activated during an emergency. It functions under the {Emergency Plant Manager}, who is responsible for organizing and coordinating the emergency efforts at and within the immediate vicinity of the site (including carrying out all onsite emergency efforts and the initial offsite environs monitoring efforts necessary to assess plant releases).

   The Plant ERO consists of site personnel who are involved with emergency response efforts necessary to control the plant during an incident. This organization operates out of the Control Room, the Technical Support Center (TSC) and the Operations Support Center (OSC). Collectively, members of the Plant ERO provide for the following activities during an emergency:

   - Plant systems operations

- Radiological survey and monitoring (including Environs Monitoring)
- Firefighting
- Rescue operations and First Aid
- Decontamination
- Security of plant and access control
- Repair and damage control
- Personnel protection including Assembly, Accountability and Evacuation
- Communications
- Initial Liaison responsibilities with Federal, {State} and local authorities

When plant conditions warrant entry into the Severe Accident Management Guidelines (SAMGs), the {Emergency Plant Manager} or other qualified individual assumes the role of SAMG Decision-Maker. The {Engineering Director} and/or another qualified individual(s) assumes the role of SAMG Evaluator (at least 2 are required), and the Control Room staff assumes the role of SAMG Implementers. Control Room personnel will perform mitigating actions for severe accidents per EOPs prior to TSC activation.

All Plant ERO personnel shall have the authority to perform assigned duties in a manner consistent with the objectives of this plan. In addition to maintaining adequate documentation of the event, position responsibilities include:

1) {Shift Supervisor} ({Interim Emergency Director}) Control Room

A {Shift Supervisor} is on duty 24 hours a day and has {Emergency Director} responsibilities in a declared emergency until relieved. While serving in this capacity the {Shift Supervisor} is responsible for:

- Activating the ERO (as deemed appropriate or as procedurally required).
- Initiating the NRC Emergency Response Data System (ERDS).
- Performing those duties outlined in Section B.5.a.3 for the {Emergency Plant Manager}. The responsibilities described for the {Emergency Plant Manager} apply to either the {Shift Supervisor} or the {Emergency Plant Manager} depending on which individual is in Command and Control.

The on-duty {Shift Supervisor} directs the activities of the operating crew and is responsible for the safe operation of the plant in compliance with the site NRC operating license and the site operating procedures. The {Shift Supervisor}, after relinquishing Command and Control, functionally reports to the Operations Manager in the TSC.

The {Shift Supervisor's} responsibilities, when not in Command and Control, are described below:

- The authority and responsibility to shutdown the reactor when determined that the safety of the reactor is in jeopardy or when operating parameters exceed any of the reactor protection system set-points and automatic shutdown does not occur;

- To ensure a review has been completed to determine the circumstance, cause, and limits under which operations can safely proceed before the reactor is returned to power following a trip or an unscheduled or unexplained power reduction;

- The responsibility to be present at the plant and to provide direction for returning the reactor to power following a trip or an unscheduled or unexplained power reduction;

- The responsibility to adhere to the station Technical Specifications and to review routine operating data to assure safe operation;

- The responsibility to identify applicable EALs and emergency classifications;

- The responsibility to adhere to plant operating procedures and the requirements for their use. During an emergency, operations personnel may depart from approved procedures where necessary to prevent injury to personnel, including the public, or damage to the facility consistent with the requirements of 10 CFR 50.54(x) and (y); and

- Supervise the plant operation activities of the Control Room Crew and Emergency Communicator(s) in the Control Room.

2) {Emergency Plant Manager} TSC

The {Emergency Plant Manager} reports to the {Emergency Director} and supervises and directs the Plant ERO. The {Emergency Plant Manager}'s responsibilities include organizing and coordinating the onsite emergency efforts. Additionally, the {Emergency Plant Manager} has the requisite authority, plant operating experience and qualifications to implement in plant recovery operations.

a) {Emergency Plant Manager} Responsibilities while in Command and Control:

- Perform all non-delegable responsibilities of the {Emergency Director} in Command and Control until relieved by the EOF.

- Conduct personnel assembly/accountability and evacuation of non-essential personnel at Site Area Emergency, General Emergency or as conditions warrant.

- If the emergency involves a hazardous substance and/or oil discharges, ensure that appropriate notifications and responses have been made.

- Determine if the OSC is to remain activated at the Alert Classification.

b) {Emergency Plant Manager} Responsibilities while not in Command and Control:

- Event Classification.

- Emergency exposure controls.

- Protective actions for all onsite personnel.

- Supervision of the Plant ERO.

- Inform the {Emergency Director} and onsite NRC as to the status of the plant.

- Assist the {Emergency Director} in the acquisition of information for the {state}/local notifications, NRC notification and offsite agency updates.

- Provide information and recommendations to the {Emergency Director}.

- Implement plans, procedures and schedules to meet emergency response objectives as directed by the {Emergency Director}.

- Request from the Offsite ERO any additional material, personnel resources or equipment needed to implement response plans and operations.

- Assume the duties and responsibilities of SAMG Decision-Maker when a transition to Severe Accident Management Guidelines (SAMGs) is initiated. This responsibility can be delegated to the Operations Manager if qualified.

3) {TSC Director} TSC

The {TSC Director} reports to the {Emergency Plant Manager} and is responsible for the content of information transmitted from the TSC to other agencies (or facilities) and for documenting information received at the TSC in coordination with the {Emergency Plant Manager}. Responsibilities include:

- Verify that qualified individuals are filling Emergency Communicator positions in the Control Room, TSC and OSC.

- Activate, or verify activation of the Emergency Response Data System (ERDS).

- Supervise the activities of the {Administrative Support Manager} and Communicator positions.
- Ensure that communications are established with appropriate parties as directed by the {Emergency Plant Manager}.
- Ensure that all required notifications to offsite governmental agencies ({state}, local and NRC) are timely and accurate.
- Act as the Licensee Liaison to any NRC Site Team Representatives.
- Ensure that the NRC Site Team Representatives are directed to their appropriate counterparts.
- Assist the {Emergency Director} in the acquisition of information for off-site agency updates.
- Record and relay inquiries to the {Emergency Plant Manager}. In addition, record responses to such inquiries prior to transmission.
- Assist the {Emergency Plant Manager} in maintaining proper records.

4) {Emergency Communicators} CR/TSC/OSC/EOF

The communicators are responsible for transmitting/receiving information to and from the TSC, OSC, EOF and Control Room. General responsibilities assigned to all Communicators include:

- Establish communications with appropriate parties as directed.
- Transmit information that has been reviewed and/or approved by the responsible Manager or Coordinator.
- Document time, date and information being transmitted or received on appropriate forms.
- Record and relay inquiries and the responses to those inquiries.
- Assist appropriate Managers and Coordinators in maintaining proper records and logs of emergency related activities.
- Gather, record and post appropriate information.

a) Specific responsibilities assigned to the {TSC Communicator} include:

- Communicate and receive information via dedicated communications circuit or commercial telephone line with appropriate agencies prior to the EOF accepting Command and Control.
- Monitor offsite communications until released by the {TSC Director}.

b) Specific responsibilities assigned to the {Operations Communicators} (TSC and Control Room):

- Relay requests from the Control Room and TSC for the dispatching of OSC Teams.
- Inform the Control Room, TSC, and EOF of significant changes in event status (e.g. changes in classification, command and control, initiation of site assembly, accountability, evacuation, etc.).
- Appraise the TSC and EOF staff of the overall plant condition and significant changes to system and equipment status.
- Appraise the Control Room of the status of OSC Team activities.

c) Specific responsibilities assigned to the {Emergency Notification System (ENS) Communicator} include:

- Notify the NRC of changes in event classification.
- Transmitting appropriate data to the NRC.
- Responding to NRC inquiries.
- Provide real time updates of significant changes to plant and system status and responses to NRC inquiries.
- Maintain continuous communications with the NRC, if requested, via the NRC ENS phone or commercial telephone line.

d) Specific responsibilities assigned to the {HPN Communicator} include:

- Maintain continuous communications with the NRC, if requested, via the NRC Health Physics Network (HPN) phone or commercial telephone line.
- Communicate current Health Physics information to NRC representatives, as requested.
- Coordinate the communications of radiological information to the NRC between the TSC and the EOF (onsite vs. environmental data).

5) {Operations Manager} TSC

The {Operations Manager} reports to the {Emergency Plant Manager}. Major functions include determining the extent of the site emergencies, initiating corrective actions, and implementing protective actions for onsite personnel. In the event that the {Emergency Plant Manager} becomes incapacitated and can no longer fulfill the designated responsibilities, the {Operations Manager} will normally assume the responsibilities until relieved by another qualified {Emergency Plant Manager}. Responsibilities include:

- Coordinate TSC efforts in determining the nature and extent of emergencies pertaining to equipment and plant facilities in support of Control Room actions.
- Initiate immediate corrective actions to limit or contain the emergency, invoking the provisions of 10 CFR 50.54(x) if appropriate, and specifically when addressing Severe Accident Management Guidelines (SAMG).
- Recommend equipment operations checks and miscellaneous actions to the Control Room in support of restoration and accident mitigation.
- Approve special procedures and implement as required under the provisions of 10 CFR 50.54(x).
- Assist the {Maintenance Manager} in determining the priority assigned to OSC activities.
- Organize and direct medical response efforts for injured personnel.
- Ensure adequate staffing of the Control Room and TSC.
- Ensure the {Shift Supervisor} is informed of OSC staffing utilization and activities.
- Identify steps or procedures that the Operations staff should be utilizing to properly respond to the emergency condition.
- Assist the {Emergency Plant Manager} in evaluating changes in event classification.
- Supervise the activities of the {Operations Communicator} and the {ENS Communicator} in the TSC.
- Act as the Operations liaison with the appropriate NRC Site Team Representative.
- At the direction of the {Emergency Plant Manager}, assume the duties and responsibilities of the Evaluator, or Decision-Maker if qualified, when transition to Severe Accident Management Guidelines (SAMG) is initiated.

6) {Engineering Director} TSC

The {Engineering Director} reports to the {Emergency Plant Manager} and directs a staff in performing technical assessments of site emergencies and assists in recovery planning. Responsibilities include:

- Accumulate, tabulate and evaluate data on plant conditions.
- Evaluate plant parameters during an emergency to determine the overall plant condition.
- Coordinate core damage assessment activities.
- Identify data points and control parameters that the Operations staff should monitor.
- Ensure that current and adequate technical information is depicted on status boards.
- Identify and direct staff in the development of special procedures needed to effect long-term safe shutdown or to mitigate a release.
- Supervise the total onsite technical staff effort.
- Act as the Engineering liaison with {state} and appropriate NRC Site Team representatives.
- Assist the {Radiation Protection Manager} for onsite radiological/technical matters.
- Assist the {Emergency Plant Manager} in evaluating plant based PARs (prior to EOF accepting command and control) and changes in event classification.
- Supervise the activities of the {TSC Communicator}.

7) {Technical Support Staff} TSC

The {TSC Technical Support Staff} consists of the following minimum staff engineering positions:

- {Electrical Engineer}
- {Mechanical Engineer}
- {Reactor Engineer}

In addition, site engineering support will be augmented on an as needed basis to support accident assessment and mitigation activities.

8) {Administrative Support Manager} TSC

The {Administrative Support Manager} reports to the {TSC Director} and provides administrative services in support of emergency/recovery operations. Responsibilities include:

- Coordinate shift relief and continual staffing of the site.
- Arrange for clerical staff at the TSC, OSC and Control Room.
- Assist the {Security Coordinator} in coordinating ERO and site activities in support of on-going security contingency, accountability or site/area evacuation efforts.
- Support the processing of special procedures and interim reports during an emergency.
- Ensure that event status and priority logs are being maintained in the TSC.
- Coordinate record-keeping efforts for the emergency event.
- Arrange for food, sleeping facilities and other necessary accommodations for onsite emergency workers.
- Arrange for specialized training of emergency response personnel as needed.

9) {Radiation Protection Manager (RPM)} TSC

The Radiation Protection Manager reports to the {Emergency Plant Manager} and supervises the activities of the {Radiation Controls Engineer (RCE)} and {Radiation Controls Coordinator Director (RCC)} and {Radiation Protection Staff}. The RPM directs a {Radiation Protection staff} in determining the extent and nature of radiological or hazardous material problems onsite. Responsibilities include:

- Accumulate, tabulate and evaluate data on plant conditions such as meteorological and radiological monitoring readings, and other pertinent data.
- Act as the Radiological liaison with the appropriate NRC Site Team representative.
- Ensure use of protective clothing, respiratory protection, and access control within the plant as deemed appropriate to control personnel exposures.
- Ensure that appropriate bioassay procedures have been implemented for onsite personnel when a radioactivity incident has occurred.

- Ensure that personnel are decontaminated, if necessary.
- Authorize personnel exposures below 5 Rem (0.05 Sv) TEDE (EPA-400 lower limit).
- Assist the {Emergency Plant Manager} in determining if exposures in excess of the 5 Rem (0.05 Sv) TEDE (EPA-400 lower limit) or emergency CDE Thyroid limits are necessary.
- Advise the {Emergency Plant Manager} of situations when the use of KI should be considered.
- Assist the {Emergency Plant Manager} in evaluating dose-based PARs (prior to EOF accepting command and control) and changes in radiological event classification.
- Advise the {Emergency Plant Manager} and {Radiological Assessment Director} (in EOF) of changes in radiological release status.
- Assist the {Operations Manager} in planning rescue operations and provide monitoring services as required, including the transfer of injured and/or contaminated personnel.
- Coordinate with the {Security Coordinator} to determine the routes to be used for evacuation of non-essential personnel.
- Assure additional radiation protection personnel and/or equipment is arranged for, as necessary.

10) {Radiation Controls Engineer (RCE)} TSC

The {Radiation Controls Engineer} reports to the {Radiation Protection Manager} and coordinates the radiological and chemistry interface between the technical support engineering efforts. Responsibilities include:

- Monitor area and process radiation monitors to identify trends and potential hazards within the station.
- Evaluate plant environmental factors regarding radiological and other hazardous material conditions.
- Evaluate radiological and hazardous material surveys and chemistry sample results as appropriate.
- Direct the performance of sampling activities through coordination with the OSC Chemistry Lead in support of operations and core damage estimates as necessary.
- Coordinate radiological and chemistry information with the Reactor Core Engineer in support of core damage assessment.

11) {Radiation Controls Coordinator (RCC)} OSC

The {Radiation Controls Coordinator (RCC)} reports to the {Radiation Protection Manager}. The RCC coordinates site and in-plant Radiation Protection response activities through the {OSC Leads}. Responsibilities include:

- Support the {OSC Leads} in the dispatching of OSC Teams.
- Assist the {Operations Manager} in planning radiological controls for personnel dispatched from the Control Room.
- Ensure the proper use of protective clothing, respiratory protection, and access controls in the plant as appropriate to control personnel exposure.
- Monitor habitability concerns impacting access to plant and site areas.
- In coordination with the {OSC Leads}, assemble and dispatch the Monitoring Teams as required.
- Supervise the activities of the {HPN Communicator} in the TSC.
- Request additional Radiation Protection personnel and/or equipment, as necessary in support of site activities and staff relief.
- Prior to EOF Radiological Assessment Group staffing:
  - Perform dose assessments and provide appropriate dose-based PARs.
  - Coordinate Monitoring Team activities.
  - Monitor meteorological conditions and remain cognizant of forecast data.
- Following EOF Radiological Assessment Group staffing:
  - Transfer control of the Monitoring Teams to the EOF {Environmental Assessment Director} when appropriate.
  - Transfer responsibility of dose assessment activities to the EOF {Radiological Assessment Director}.
  - Assist the EOF {Environmental Assessment Director} in the acquisition of information for the off-site agency updates.

12) {Maintenance Manager} TSC

The {Maintenance Manager} reports to the {Emergency Plant Manager} and directs a staff in providing labor, tools, protective equipment and parts needed for emergency repair, damage control and recovery efforts to place the plant in a safe condition or return the plant to its pre-accident status. Responsibilities include:

- Direct the total onsite maintenance and equipment restoration effort.
- Request additional equipment in order to expedite recovery and restoration.
- Supervise the activities of the {OSC Director}.
- Ensure the {Operations Manager} is informed of OSC staffing utilization and activities.
- In coordination with the {Operations Manager}, determine the priority assigned to OSC activities.
- Ensure adequate staffing of the OSC.
- Assist in rescue operations.
- Identify required procedures that need to be written or implemented in support of the response efforts.

13) {Security Coordinator} TSC

The {Security Coordinator} reports to the {Emergency Plant Manager} and maintains plant security and personnel accountability at the site. Responsibilities include:

- Maintain plant security and account for all personnel within the protected area.
- Assist the {Emergency Plant Manager} in evaluating changes in security related threats and event classifications.
- Identify any non-routine security procedures and/or contingencies that are in effect or that require a response.
- Expedite ingress and egress of emergency response personnel.
- Coordinate with the {Radiation Protection Manager} in controlling ingress and egress to and from the Protected Area if radiological concerns are present.

- Provide for access control to the Control Room, TSC and OSC, as appropriate.
- Expedite entry into the Protected Area, as necessary, for the NRC Site Team.
- Act as the Security liaison with the appropriate NRC Site Team representative.
- Assist the {Radiation Protection Manager} in determining personnel evacuation routes as necessary.
- Coordinate the evacuation of site non-essential personnel with the appropriate Local Law Enforcement Agencies (LLEAs).

14) {Operations Support Center Director} OSC

The {OSC Director} reports to the {Maintenance Manager} and supervises the activities of OSC personnel. Responsibilities include:

- Assign tasks to designated Leads as available:
  - Operations
  - Mechanical Maintenance
  - Electrical/I&C Maintenance
  - Radiation Protection
  - Chemistry
- Coordinate with the OSC Operations Lead in the dispatch of Operations personnel to support Control Room and OSC Team activities.
- Notify the Control Room and TSC prior to dispatch of any OSC teams into the plant.
- Maintain OSC resources including personnel, material, and equipment.
- Maintain accountability for all individuals dispatched from the OSC.
- Conduct periodic briefings on the overall plant status, emergency response activities, and site priorities.

15) {OSC Leads} OSC

{OSC Leads} report to the {OSC Director} and are assigned from the following site departments:

- Mechanical Maintenance
- Electrical / Instrument and Control

- Radiation Protection
- Chemistry
- Operations (designated Operations representative)

The {OSC Lead} assigned to an OSC team is responsible at all times for the safety of team personnel and to keep the {OSC Director} apprised of team status. Specifically, the {OSC Leads} are responsible for the managing and supervising OSC team personnel, including:

- Conduct of adequate pre-dispatch briefings.
- Ensuring adequate protective equipment and measures have been identified.
- Tracking of OSC team activities while dispatched.
- Debriefing of team personnel upon return to the OSC.

16) {OSC Team Members} OSC

Technicians and operations personnel form an OSC pool. OSC Pool personnel form the teams that perform emergency mitigation tasks in the plant. Individuals from operations, maintenance, chemistry and operations are always available as part of the OSC Pool. Individuals from other plant organizations may also be called to assist in emergency mitigation efforts.

b. Offsite Emergency Response Organization: The Offsite ERO, part of the overall {CCNPP Unit 3} ERO, is activated during an emergency. It functions under the {Emergency Director}, who is responsible for organizing and coordinating the overall emergency efforts. The Offsite ERO focuses on the offsite interfaces and support of the Plant ERO efforts.

The Offsite ERO is activated in the Emergency Operations Facility (EOF) at an Alert. The EOF Organization is responsible for evaluating, coordinating and directing the overall company activities involved in the emergency response. Within the EOF, the {Emergency Director} shall assume Command and Control from the {Emergency Plant Manager} when the classification escalates to an Alert or higher, unless the EOF capabilities are limited such that the overall control and responsibility for PARs and offsite notifications cannot be assumed. The EOF may also function in a supporting role to the site when the {Emergency Plant Manager} maintains Command and Control.

The Offsite ERO consists of site personnel (with some corporate support) who are involved with emergency response efforts necessary to coordinate the {CCNPP Unit 3} emergency response with offsite agencies response efforts. This organization operates out of the Emergency Operations Facility (EOF). Collectively, members of the Offsite ERO provide for the following activities during an emergency:

- Notifications and Communications with offsite authorities
- Coordinating Emergency Response activities with offsite Emergency Responders.
- Protective Action Recommendations
- Offsite Radiological survey and monitoring
- Support of the Public Information Organization, including approval of new releases.
- Obtaining offsite support for onsite mitgative actions

All Offsite ERO personnel shall have the authority to perform assigned duties in a manner consistent with the objectives of the E-Plan. In addition to maintaining adequate documentation of the event, position responsibilities include:

1) {Emergency Director} EOF

   Although the {Emergency Director} has overall authority for all aspects of the Licensee's emergency response efforts, most of his/her efforts are focused on the interface between the company's ERO and offsite authorities and ensuring the Plant ERO receives the support necessary to mitigate results of the event.

   a) When the {Emergency Director} has Command and Control, the ongoing responsibilities include:

      - Overall Command and Control of emergency response activities and the non-delegable responsibilities for PAR determination and the notification of offsite authorities.
      - Ensure that Federal, {state} and local authorities and industry support agencies remain cognizant of the status of the emergency situation. If requested, dispatch informed individuals to offsite governmental Emergency Operation Centers (EOCs).
      - Approve the technical content of the Licensee press releases prior to their being released to the media.
      - Coordinate all the Licensee activities involved with the emergency response.
      - Ensure off-site agency updates are periodically communicated as required/requested.
      - Request assistance from non-Licensee emergency response organizations, as necessary.

2) {Emergency Offsite Facility (EOF) Director} EOF

The {EOF Director} reports to the {Emergency Director} and has the authority, management ability and technical knowledge to assist the {Emergency Director} in the management of {CCNPP'} offsite ERO.

{EOF Director} Responsibilities include:

- Direct and coordinate the activation and response efforts of the EOF staff in support of the {Emergency Director}.
- Evaluate the need to augment the EOF staff based on events in progress.
- Monitor information flow within the EOF to ensure that facility activities remain coordinated.
- Prepare {state}/local notification forms with the assistance of the {Radiological Assessment Director} and the {Technical Support Manager}.
- Coordinate services as necessary to support EOF operations.
- Coordinate with the {Administrative Support Manager} for continual shift staffing requirements.
- Assist in the conduct of {Emergency Director} duties.
- Act as the designated alternate for approval of the technical content of the Licensee Press Releases and information released to the News Media.
- Act as purchasing agent in support of the TSC for contract negotiation / administration.

3) {Technical Support Manager} EOF

The {Technical Support Manager} reports to the {EOF Director} and is responsible for obtaining and analyzing plant status information and ensuring that it is disseminated. Specific responsibilities include:

- Assist the {Emergency Director} in monitoring changes in event classification.
- Assist the {Emergency Director} in determining plant-based PARs when necessary.
- Provide information to the {EOF Director} for completing the {state}/local notification form.
- Provide the {Emergency Director} information concerning the status of plant operations, and recommendations for mitigating the consequences of the accident.

- Coordinate the overall Licensee engineering support from corporate staff and other outside sources.
- Interface with Industry and contractor engineering support organizations.
- Ensure that the {Radiological Assessment Director} is informed of changes in plant status that impacts or potentially impacts the offsite environment or PARs.
- Provide technical information on facility and system design.
- Assist in the development of post-accident recovery measures.

4) {Operations Advisor} EOF

The {Operations Advisor} reports to the {Technical Support Manager}, directs the {ENS Communicator}, and is responsible for obtaining and analyzing plant status information and ensuring that it is disseminated. Specific responsibilities include:

- Monitor the plant parameter communication line to keep appraised of:
  - Control Room activities including progress on Emergency Operating Procedures.
  - Significant changes in plant system/equipment status and critical parameters.
  - Possible changes in event classification.
- Identify and track critical parameters for the identification and trending of current plant status information.
- Assist the station in identifying Operations resources from corporate staff or unaffected stations for direct support of plant shift operations personnel.
- Assist the {ENS Communicator} in the completion of the NRC Event Notification Worksheet and in responding to NRC inquiries.
- Ensure that the {Radiological Assessment Director} is informed of changes in plant status that impact or potentially impact the offsite environment or PARs.
- Monitor the EOF Communicator to remain aware of TSC technical support activities, strategies and priorities.
- Assist the {Radiological Assessment Director} in acquiring technical information pertaining to release pathway and core damage assessment.

5) {Radiological Assessment Director} EOF

The {Radiological Assessment Director} reports to the {EOF Director} and directs the activities of the EOF Radiation Assessment staff. Specific responsibilities include:

- Recommend changes in event classification and PARs based upon effluent releases or dose projections.
- Assist the {EOF Director} in the evaluation of the significance of an emergency with respect to the public.
- Notify the {EOF Director} of meteorological changes that may impact identification of downwind areas.
- Advise the {Emergency Director} of protective actions taken by the site for plant personnel.
- Assist the TSC in the planning and coordination of activities associated with the evacuation of non-essential personnel.
- Advise the {Emergency Director} on the need for emergency exposures or for issuance of KI to the Monitoring Teams or Licensee personnel required to enter the plume.
- Determine the need for and contact occupational health / industrial safety personnel for assistance.
- Monitor plant radiological conditions and advise the TSC {Radiation Protection Manager} of any adverse trends or potential release pathways that may impact existing event classification.
- Assist in the completion and review of the {state}/local notification form.
- Maintain cognizance of environmental sampling activities.
- Ensure {state} authorities are provided information pertaining to {CCNPP Unit 3} Monitoring Team activities and sample results.
- Assist the site in the following areas:
  - Planning and coordination of activities associated with the evacuation of non-essential personnel.
  - Acquisition of additional instrumentation, dosimetry, protective equipment and radiological support personnel.

- Assist and interface with the EOF Support personnel and the site in the development of plans for plant surveys, sampling, shielding, and special tools in support of waste systems processing and design modification activities.

- Upon request, provide in-plant health physics data to Emergency Public Information personnel and the {HPN Communicator}.

- Upon request, provide environmental data to Emergency Public Information personnel.

6) {Environmental Assessment Director} EOF

The {Environmental Assessment Director} reports to the {Radiological Assessment Director} and directs the Monitoring Teams. Responsibilities include:

- Coordinate the transfer of control of the Monitoring Teams if initially under the direction of the TSC {Radiation Controls Coordinator}.

- Ensure communications are established with the TSC to obtain information on the accident conditions, meteorological conditions and estimates of radioactive material releases.

- Maintain cognizance of Monitoring Team exposure. When warranted, ask the {Radiological Assessment Director} to initiate an evaluation of the need for administering KI to the Licensee workers.

- Determine needs of the {Radiological Assessment Director}, the {Radiological Assessment Specialist}, and the {HPN Communicator(s)} for updates on Monitoring Team data and ensure distribution of new data to them in accordance with those needs.

- Evaluate and coordinate additional equipment and personnel as necessary from unaffected units to augment and/or relieve site Monitoring Teams.

- Establish and maintain contact with the dispatched Monitoring Teams.

- Document the {Environmental Assessment Director's} instructions and then relay this information to the Monitoring Teams.

- Document environmental data reported by the Monitoring Teams.

- Periodically obtain and document information on Monitoring Team radiological exposure.

- Promptly report new environmental or Monitoring Team exposure data to the {Radiological Assessment Director}.

- Document questions and answers directed to and received from the Monitoring Teams. Ensure the {Radiological Assessment Director} is cognizant of these information requests and relay replies to these requests.

- Advise the {Radiological Assessment Director} of changes in event classification based on effluent releases or dose projections.

- Remain cognizant of forecast and meteorological data and ensure the status is updated periodically.

- Notify the {Radiological Assessment Director} of meteorological changes that may impact identification of downwind areas.

- Upon request, provide release and dose assessment data to Emergency Public Information personnel and the {HPN Communicator}.

7) {Radiological Assessment Coordinator} EOF

The {Radiological Assessment Coordinator} reports to the {Radiological Assessment Director} and directs the activities of the {Radiological Assessment Specialist} and the {HPN Communicator}. Responsibilities include:

- Interpret radiological data and provide PARs based upon dose projections to the EOF {Radiological Assessment Director}.

- Advise the {Radiological Assessment Director} of changes in event classification based on effluent releases or dose projections.

- Initiate evaluation of the need for administering KI to Licensee workers when requested by the {Environmental Assessment Director}.

- Remain cognizant of forecast and meteorological data and ensure the status is updated periodically.

- Notify the {Radiological Assessment Director} of meteorological changes that may impact identification of downwind areas.

- Upon request, provide release and dose assessment data to Emergency Public Information personnel and the {HPN Communicator}.

8) {Radiological Assessment Specialist} EOF

The {Radiological Assessment Specialist} reports to the {Radiological Assessment Director}. Responsibilities include:

- Perform dose projections using the Dose Assessment computer models as directed by the {Radiological Assessment Director}.

- Monitor meteorological and plant effluent conditions.
- Notify the {Radiological Assessment Director} of meteorological changes that may impact identification of downwind areas.
- Evaluate the need for administering KI to the Licensee workers when requested by the {Radiological Assessment Director}.

9) {HPN Communicator} EOF

The {HPN Communicator} reports to the {Environmental Assessment Director}. Responsibilities include:

- Provide updates and respond to inquiries from the NRC on offsite environmental data, release status, dose projections and changes to PARs for the general public.
- Obtain release and dose assessment data from the {Radiological Assessment Director} and Monitoring Team data from the {Environmental Assessment Director}.
- Maintain continuous communications with the NRC, if requested, via the NRC HPN phone or commercial telephone line.
- Communicate current Health Physics information to NRC representatives, as requested.

10) {Administrative Support Manager} EOF

The {Administrative Support Manager} reports to the {EOF Director} and directs the activities of the administrative, security, and liaison personnel. Responsibilities include:

- Ensure contact is made and communications are maintained with appropriate non-Licensee personnel whose assistance may be required to terminate the emergency conditions and to expedite the recovery.
- Advise the {EOF Director} concerning the status of activities relating to governmental interfaces.
- Obtain support from Human Resources, the Comptroller's Office, the Legal Department, Accounting Department and others as required.
- Ensure that access to the EOF is limited to Emergency Responders and authorize admittance to non-Licensee personnel.
- Implement the Licensee Fitness for Duty Program.
- Ensure that NRC Site Team Representatives are directed to the {Regulatory Liaison} upon arrival at the EOF.

- Ensure that updates and information are provided to the EOC Liaisons and to offsite officials present in the EOF.
- Assist in obtaining and coordinating additional technical expertise to support plant requests, including the Licensee corporate staff, unaffected units and vendor/contractors.
- Coordinate maintenance of EOF equipment as necessary.
- Ensure shift relief and continual staffing for the EOF.
- Direct the activities of the Computer Maintenance Staff.
- Direct the clerical staff and ensure the clerical requirements for the other EOF staff are met.
- Obtain clerical support for the EOF and JIC.
- Coordinate shift relief and continual staffing for the EOF.
- Obtain services as appropriate to support operation of the EOF.
- Obtain additional resources to support access control measures needed at the EOF and JIC.

11) {Computer Support} EOF

The {Computer Support} staff reports to the {Administrative Support Manager} (EOF). Responsibilities include:

- Assist any personnel in logging in, initializing or using a desired computer program.
- Investigate and repair problems encountered with communications equipment and computer equipment/applications.

The staff assigned to computer support duties may be dispatched to assist other emergency facilities personnel as needed.

12) {State/Local Communicator} EOF

The {State/Local Communicator} reports to the {Administrative Support Manager}. Responsibilities include:

- Communicate and receive information via the State / Local notification system or commercial telephone line with appropriate {state} and local agencies.
- Ensure that the {Administrative Support Manager} is made aware of issues and questions raised by offsite agencies and then relay the replies to these requests.

13) {EOC Communicator} EOF

The {EOC Communicator} reports to the {Administrative Support Manager}. Responsibilities include:

- Coordinate and dispatch EOC Liaisons as needed or requested.
- Establish and maintain periodic contact with each location where the Licensee EOC Liaisons have been dispatched.
- Ensure EOC Liaisons are provided event information and notifications.
- Ensure that the {Administrative Support Manager} is made aware of issues and questions raised by offsite agencies and then relay the replies to these requests.

14) {County EOC Liaison(s)} County EOCs

The {County EOC Liaison(s)} will be dispatched to County Emergency Operations Centers (EOCs) based on established agreements with the counties. The {County EOC Liaison(s)} use the {EOC Communicator} as their contact at the EOF. Responsibilities include:

- Monitor and report County EOC activities to the EOF.
- Conduct briefings and answer questions.
- Provide simplified explanations to EOC personnel of technical details distributed through approved channels.
- Assist with confirmation/verification of information distributed through approved channels.
- Provide media at the EOC with approved the Licensee press releases.
- Assist Emergency Public Information personnel in rumor control and media monitoring.

15) {State EOC Liaison(s)} {State} EOCs

At the request of {state} officials and/or at the discretion of the {Emergency Director}, the Licensee will provide Liaison personnel to {state} Emergency Operation Centers (EOCs). The {State EOC Liaison(s)} use the {EOC Communicator} as their contact at the EOF. Responsibilities include:

- Monitor and report {State} EOC activities to the EOF.
- Conduct briefings and answer questions as requested.
- Assist Emergency Public Information personnel in rumor control and media monitoring.

16) {Regulatory Liaison} EOF

The {Regulatory Liaison} reports to the {Administrative Support Manager}. Responsibilities include:

- Coordinate interfaces between the Licensee personnel and governmental agencies within the EOF.
- Obtain necessary equipment and supplies to support activities of governmental agencies located in the EOF.

c. Public Information Emergency Response Organization: The Public Information ERO is part of the overall Licensee ERO group that is activated during an emergency. It functions under the {Company Spokesperson} who reports to the {Emergency Director}.

The Public Information ERO consists of corporate and site personnel who are involved with emergency response efforts necessary to provide accurate information regarding the {CCNPP Unit 3} emergency response efforts. This organization operates out of the Joint Information Center (JIC) and/or Emergency Operations Facility (EOF). Collectively, members of the Public Information ERO provide for the following activities during an emergency:

- Development and issuance of New Releases.
- Coordination and conduct of Media Briefings
- Rumor Control
- Media Monitoring and correction of mis-information

All Public Information ERO personnel shall have the authority to perform assigned duties in a manner consistent with the objectives of this plan. In addition to maintaining adequate documentation of the event, position responsibilities include:

1) {Company Spokesperson} JIC

The {Company Spokesperson} reports to the {Emergency Director} and is responsible for directing the Licensee Public Information Emergency Response Organization and providing news information to the media. Responsibilities include:

- Maintain command and control of the Joint Information Center.
- Coordinate with Federal, {state} and local agencies, as well as with other organizations involved in the emergency response, to maintain factual consistency of information to be conveyed to the news media/public.
- Conduct periodic briefings with the news media.
- Interface with the {Public Information Director}.

- Coordinate and direct responses to media inquiries.
- Ensure that the composition and timeliness of the Licensee News Releases are adequate.
- Provide for timely exchange of information between other spokespersons.

2) {Technical Spokesperson} JIC

The {Technical Spokesperson} reports to the {Company Spokesperson}. Responsibilities include:

- In coordination with the {Technical Advisor}, prepare briefing papers which contain additional detail and background not found in the news releases.
- Provide answers as soon as possible to media questions.
- Provide a follow-up explanation that corrects misinformation as soon as practicable.

3) {Radiation Protection Spokesperson} JIC

The {Radiation Protection Spokesperson} reports to the {Company Spokesperson}. Responsibilities include.

- In coordination with the {Radiological Advisor}, prepare briefing papers which contain additional detail and background not found in the news releases.
- Provide answers as soon as possible to media questions.
- Provide a follow-up explanation that corrects misinformation as soon as practicable.

4) {JIC Director} JIC

The {JIC Director} reports the {Company Spokesperson} to ensure the operability of and to supervise the activities in the JIC. Responsibilities include:

- Maintain cognizance of conditions of the plant and environment, and the actions of the Licensee and governmental support personnel.
- Coordinate with Federal, {state} and local agencies, as well as with other organizations involved in the emergency response, to maintain factual consistency of information to be conveyed to the news media/public.
- Participate, as needed, in rumor control activities.
- Ensure that adequate information flow between the EOF and the JIC is coordinated through the {Public Information Director}.
- Authorize admittance of non-Licensee officials to the JIC.

5) {JIC Coordinator} JIC

The {JIC Coordinator} reports to the {JIC Director} and supervises the facilities support staff. Responsibilities include:

- Ensure the JIC is activated and operational. This includes the availability of communications and visual aids.
- Ensure that access to the JIC areas occupied by Licensee personnel is controlled.
- Establish a minimum frequency for addressing news media/public representatives and ensure that some form of communication occurs within that time frame (i.e., an update at least hourly.)
- Document unanswered questions and serious public misinformation issues. Follow-up on these questions and issues to ensure that they are being adequately addressed.
- Coordinate the interface between the Licensee and the news media/public, including, as necessary, briefings, news conferences, interviews and responses to information requests.

6) {Public Information Liaison} JIC

The {Public Information Liaison} reports to the {JIC Director}. Responsibilities include:

- Coordinate information flow between the EOF and JIC.
- Ensure that approved News Releases are made available in the JIC.

7) {JIC Administrative Manager} JIC

The {JIC Administrative Manager} reports to the {JIC Director}. Responsibilities include:

- Direct the clerical staff and ensure the clerical requirements for the other JIC staff are met.
- Coordinate shift relief and continual staffing for the JIC.
- Obtain additional radio and telephone equipment as necessary to meet the needs of the emergency.
- Obtain services as appropriate to support operation of the JIC.

8) {Access Control (Security)} JIC

{Access Control} reports to the {JIC Director} and is responsible for controlling facility access and obtaining authorization prior to admitting non-Licensee officials into the JIC.

9) {Public Information Director} JIC

When the Emergency Public Information Organization is activated, the {Public Information Director} reports to the {Company Spokesperson} and is responsible for all emergency event related information intended to be conveyed from the Licensee to the news media/public. The {Public Information Director} supervises the activities of the advisory staff, {News Writer} and media monitoring and rumor control personnel. Responsibilities include:

- Provide the {Emergency Director} with an overview of the public and media impacts resulting from the Licensee and governmental activities.
- Coordinate with the {Emergency Director} regarding information to be released to the public.
- Authorize the issuance of news releases.
- Interface with the {Company Spokesperson} at the JIC.
- Act as a liaison between the ERO and the Licensee's corporate executives.
- Maintain cognizance of conditions of the plant and environment, and the actions of the Licensee and governmental support personnel.
- Interface with the {Public Information Liaison} located at the JIC and coordinate information flow between the EOF and the JIC.
- Coordinate with the {Media Monitoring Staff} to review and access media coverage of the emergency event.

10) {Technical Advisor} JIC

The {Technical Advisor} reports to the {Public Information Director}. Responsibilities include:

- Assist in obtaining technical and plant status information for use in news releases and media briefings.
- Assist the {News Writer} in the preparation of news releases.
- Assist the {News Writer} in the preparation of a chronological event description log.

11) {Radiological Advisor} JIC

The {Radiological Advisor} reports to the {Public Information Director}. Responsibilities include:

- Assist in obtaining environmental and health physics information for use in news releases and media briefings.
- Assist the {News Writer} in the preparation of news releases.
- Assist the {News Writer} in the preparation of a chronological event description log.

12) {News Writer} JIC

The {News Writer} reports to the {Public Information Director} Responsibilities include:

- Obtain the assistance of the {Technical and Radiological Advisors}, as needed, to develop news releases.
- Compose draft news releases.
- Provide the drafted news releases to the {Emergency Director} for technical review prior to {Public Information Director} approval.
- Develop a chronological event description log.
- Obtain the assistance of the {Technical and Radiological Advisors}, as needed, to develop the event log.

13) {Media Monitoring Staff} JIC

The {Media Monitoring Staff} reports to the {Public Information Director}. Responsibilities include:

- Ensure that the media is being monitored and that Licensee personnel review the information detailed or contained in media releases.
- Inform the {Public Information Director} of all media reports and of actions taken to correct any misinformation or rumors.
- Direct the activities of the {Rumor Control Staff} with respect to the function of monitoring rumors from sources other than the media.

14) {Rumor Control Staff} JIC

The {Rumor Control Staff} reports to the {Public Information Director} and acts in support of the {Media Monitoring Staff}. Responsibilities include:

- Ensure that rumors are reviewed, documented and responded to by Licensee personnel as deemed appropriate.

- Until the JIC is fully activated, document and respond to rumors as quickly as possible, through Communications and Public Affairs.

- Inform the {Media Monitoring Staff} when rumors representing serious misinformation are encountered.

The above listed ERO positions form the base of the Licensee emergency response, all company personnel and resources can and will be utilized to ensure the safety of offsite populations, site personnel and protection of site equipment needed to maintain nuclear safety.

6. Emergency Response Organization Block Diagram

Tables B-1a (located in the {CCNPP Unit 3 Annex}) and B-1b list the key positions of the ERO and the supporting positions assigned to interface with federal, {state}, and local authorities. Figures B-1a through B-1d illustrates the overall ERO. Section B.5 discusses specific responsibilities and the interrelationships for key positions.

7. Corporate Emergency Response Organization

Corporate management personnel are part of the Offsite ERO and the Emergency Public Information Organization. Personnel staffing these organizations are covered in detail in Section B.5 of this plan.

In addition to corporate management personnel acting as part of the ERO, the Licensee will provide necessary company resources to aid the site with the following items:

a. Logistics support for emergency personnel, including procurement of transportation, communications, lodging, meals and any other special needs to ensure ongoing staffing of emergency facilities.

b. Arrangements for technical support and necessary resources for reentry/recovery operations.

c. Interface with high level government authorities, not normally part of emergency response activities.

d. Assistance in release of information to the news media.

8. Industry/Private Support Organizations

The Licensee retains contractors to provide supporting services to nuclear generating sites. A contract/purchase order with a private contractor is acceptable in lieu of an agreement letter for the specified duration of the contract. Among services currently provided are the following:

a. Institute of Nuclear Power Operations (INPO): Experience has shown that a licensee may need resources beyond in-house capabilities for the recovery from a nuclear plant emergency. One of the roles of the Institute of Nuclear Power Operations (INPO) is to assist affected utilities by quickly applying the resources of the nuclear industry to meet the needs of an emergency. INPO has an emergency response plan that enables it to provide the following emergency support functions:

- Assistance to the affected licensee in locating sources of emergency personnel, equipment and operational analysis.
- INPO, Electric Power Research Institute (EPRI) and Nuclear Energy Institute (NEI) maintain a coordination agreement on emergency information with their member utilities.
- INPO provides the "Nuclear Network", or its replacement, electronic communications system to its members, participants, NEI, and EPRI to coordinate the flow of media and technical information about the emergency.
- The Licensee may obtain industry information and assistance from any party to this agreement through the coordination of INPO.

To support these functions, INPO maintains the following emergency support capabilities:

- A dedicated emergency call number.
- Designated INPO representative(s) who can be quickly dispatched to the licensee ERO to coordinate INPO support activities and information flow.
- The 24-hour per day operation of an Emergency Response Center at INPO headquarters.

The Licensee will notify INPO (via the designated emergency call number) for all situations involving an Alert, Site Area Emergency, or General Emergency declaration per the {CCNPP Unit 3} reportability procedures.

INPO has coordinated the preparation of a Voluntary Assistance Agreement for Transportation Accidents. The Licensee has signed this agreement which establishes the rights and responsibilities of electric utilities in requesting or providing assistance for response to a nuclear materials Transportation Accident.

b. Nuclear Energy Institute (NEI): NEI may assist with public information efforts during a declared emergency.

c. American Nuclear Insurers (ANI): In early 1982, ANI issued Bulletin #5B (1981) "Accident Notification Procedures for Liability Insurers" which provides revised criteria for the notification of the Pools in the event of a nuclear emergency at one of the liability insured nuclear power reactor sites. This revision brings the ANI/MAELU (Mutual Atomic Energy Liability Underwriters) notification criteria into alignment with the standard emergency classification system adopted by the nuclear industry. This document also identifies a suitable channel for follow-up communication by ANI after initial notification.

- ANI/MAELU Emergency Assistance: In the event of an extraordinary nuclear occurrence (as defined in the Price-Anderson Law) ANI and MAELU (the insurance pools) have plans prepared to provide prompt emergency funding to affected members of the public.

- ANI/MAELU Emergency Assistance (Claims Handling Procedures): The pools' emergency assistance arrangements contemplate the mobilization and dispatch of emergency claims teams to directly dispense emergency assistance funds to affected members of the public.

  The pools should be notified in the event of a nuclear emergency requiring notification of {state} or Federal governmental agencies, or if the insured believes that offsite persons may be affected and financial assistance of a nature discussed may be required. In these instances, ANI expects notification as soon as possible after the initiation of the emergency. Notification to the pools in the event of an Alert, Site Area Emergency, or General Emergency will be in accordance with the Site's notification procedures.

  Even if it appears to be remote that offsite persons will be affected, the pools should be notified in order that response plans can be initiated to the point of alerting teams of adjusters to stand by. Response activity can be discontinued if it proves less severe and does not require pool response.

  All nuclear occurrences of an emergency or non-emergency nature that fall under the nuclear liability policy should be reported formally in writing to ANI by the Licensee.

- Emergency Notification and Follow-up Procedures: Pre-established lines of communication exist between each licensee and ANI in order to exchange all required information during a developing emergency situation.

  ANI maintains 24-hour coverage of an emergency notification number. During normal office hours (8:00 am - 4:00 pm) their number will be answered by the receptionist who will transfer an incoming emergency call to an appropriate individual in the office. Outside of normal office hours, this telephone line is covered by an answering service. The answering service will intercept the call and obtain the name, affiliation and telephone number of the caller. They will then notify a designated ANI staff member who will in turn call back the licensee to obtain appropriate information regarding the nuclear accident.

In order that follow-up information is available to the Insurance Pool, the Licensee has established the {Emergency Director} or their designee as a Point of Contact that ANI personnel may use to update themselves regarding the status of the emergency.

d. Environmental Monitoring Services:

- {Ft. Smallwood (REMP Laboratory). An environmental lab provides radiological environmental monitoring services in support of site and emergency Radiological Environmental Monitoring Programs (REMPs). In an emergency situation, Ft. Smallwood field personnel, at a minimum, would continue to maintain CCNPP Unit 3 air samplers and exchange TLDs under the supervision of the Environmental Assessment Director. The Ft. Smallwood lab would analyze the environmental samples for their radioactivity content and report results to CCNPP Unit 3}.

e. Department Of Energy (DOE) Radiation Emergency Assistance Center/Training Site (REAC/TS): DOE REAC/TS provides services of medical and health physics support. REAC/TS advise on the health physics aspects of situations requiring medical assistance.

f. Manufacturer Design and Engineering Support: Under established contracts, {AREVA} provides design engineering expertise, specialized equipment and other services identified as needed and deemed appropriate to assist in an emergency situation.

9. Supplemental Emergency Assistance to the ERO

Agreements are maintained with outside support agencies who do not take part in the organizational control of the emergency that provide assistance when called on during an emergency or during the recovery phase. These agreements identify the emergency measures to be provided, the mutually accepted criteria for implementation, and the arrangements for exchange of information. These support agencies (named in Appendix 3) provide services of:

a. Law enforcement;

b. Fire protection;

c. Ambulance services;

d. Medical and hospital support

Support groups providing transportation and treatment of injured site personnel are described in Section L of this plan.

Table B-1b: Minimum Staffing Requirements for the {CCNPP Unit 3} ERO

Functional Area	Major Tasks	Emergency Positions	Minimum Staffing *60 Minute Augmentation	Minimum Staffing Other On-Call	Minimum Staffing Full Augmentation
1. Plant Operations and Assessment of Operational Aspects	Control Room Staff	See Table B-1a (located in Unit Specific Annexes) for Shift Staffing. [e]			
2. Emergency Direction and Control	Command and Control	{Shift Supervisor (Interim ED)}[e] (CR)			
		{Emergency Plant Manager} (TSC)	1		
		{Emergency Director} (EOF)	1		
3. Notification & Communication	Emergency Communications	Plant Shift Personnel [e]			
		{TSC Director} (TSC)	1		
		{EOF Director} (EOF)	1		
		{TSC/EOF Communicators}:			
		{ENS Communicator} (TSC)	1		
		{HPN Communicator} (EOF)	1		
		{State/Local Communicator} (EOF)			1
	Plant Status	{OPs Communicator} (CR/TSC)			2
	Technical Activities	{Operations Advisor} (EOF)			1
	In-Plant Team Control	{Communicator} (CR/TSC/OSC)			3(a)
	Governmental	{EOC Communicator} (EOF)			(b)
		{State EOC Liaison} ({State} EOC)			1
		{County EOC Liaison} (County EOC)			(b)
		{Regulatory Liaison} (EOF)			1
4. Radiological Assessment	Offsite Dose Assessment	{Plant Shift Personnel} [e]			
		{Rad Assessment Coordinator} (EOF)	1		
		{Rad Assessment Specialist} (EOF)			1
		{Rad Controls Coordinator} (OSC)			1
	Offsite Surveys	{Environmental Assessment Dir} (EOF)	1		
		{Offsite Monitoring Team Personnel}	4		1(b)
	Onsite Surveys	{Onsite Monitoring Team Personnel}	2		(b)
	In-plant Surveys	RP Personnel [e]	2		(b)
	Chemistry	Chemistry Personnel [e]	1		(b)
	RP Supervisory	{Radiation Protection Manager} (TSC)	1		
		{Rad Assessment Director} (EOF)	1		

Functional Area	Major Tasks	Emergency Positions	Minimum Staffing *60 Minute Augmentation	Minimum Staffing Other On-Call	Minimum Staffing Full Augmentation
5. Plant System Engineering, Repair, and Corrective Actions	Technical Support / Accident Analysis	Shift Technical Advisor [e] (CR)			
		{Engineering Director} (TSC)	1		
		{Reactor Engineer} (TSC)	1		
		{Mechanical Engineer} (TSC)	1		
		{Electrical Engineer} (TSC)	1		
		{Operations Manager} (TSC)	1		
		{Radiation Controls Engineer} (TSC)			1
		{Technical Support Manager} (EOF)			1
	Repair and Corrective Actions	Mechanical Maintenance (OSC)	2		(b)
		Electrical/I&C Maintenance (OSC)	3		(b)
		{Maintenance Manager} (TSC)	1		
		{OSC Director} (OSC)	1		
		{OSC Leads [f] & Team Members}(OSC)			(b)
6. In-Plant Protective Actions	Radiation Protection	RP Personnel [e]	4		(b)
7. Fire Fighting	--	Fire Brigade			(c)
8. 1st Aid and Rescue Operations	--	Plant Personnel			(b)
9. Site Access Control and Personnel Accountability	Security & Accountability	Security Team Personnel	(d)		
		{Security Coordinator} (TSC)			1
10. Resource Allocation and Administration	Logistics	{Administrative Support Manager}(EOF)	1		
		{Administrative Support Manager}(TSC)			1
	Administration	{Clerical Staff} (TSC/EOF)			1(b)
	Facility Support	{Computer Support}[g] (EOF)			1

Functional Area	Major Tasks	Emergency Positions		Minimum Staffing *60 Minute Augmentation	Other On-Call	Full Augmentation
11. Public Information	Media Interface	{Company Spokesperson}	(JIC)		1	
		{Rad Protection Spokesperson}	(JIC)			1
		{Technical Spokesperson}	(JIC)			1
	Information Development	{Public Information Director}	(JIC)		1	
		{Radiological Advisor}	(JIC)			1
		{Technical Advisor}	(JIC)			1
		{News Writer}	(JIC)			1
		{Public Information Liaison}	(JIC)			1
	Media Monitoring and Rumor Control	{Media Monitoring Staff}	(JIC)			(b)
		{Rumor Control Staff}	(JIC)			(b)
	Facility Operation and Control	{JIC Director}	(JIC)		1	
		{JIC Coordinator}	(JIC)			1
		{JIC Administrative Manager}	(JIC)			1
		{Access Control}	(JIC)			1
		{Facility Support Staff}	(JIC)			(b)
		{Clerical Staff}				(b)
			TOTAL:	**36**	**3**	**27[(b)]**

* Response time is based on optimum travel conditions.

(a) May be provided by personnel assigned other functions.

(b) Personnel numbers depend on the type and extent of the emergency.

(c) Fire Brigade per FSAR/Technical Specifications, as applicable.

(d) Per Security Plan.

(e) All Shift ERO positions are listed in Table B-1a, contained in unit specific annexes.

(f) {OSC Team Leads} can be used to fill technical/craft positions in Maintenance, RP and Chemistry.

(g) The staff assigned to {Computer Support} may be dispatched to any facility to assist with computer/communications equipment issues.

Figure B-1a: Overall ERO Command Structure

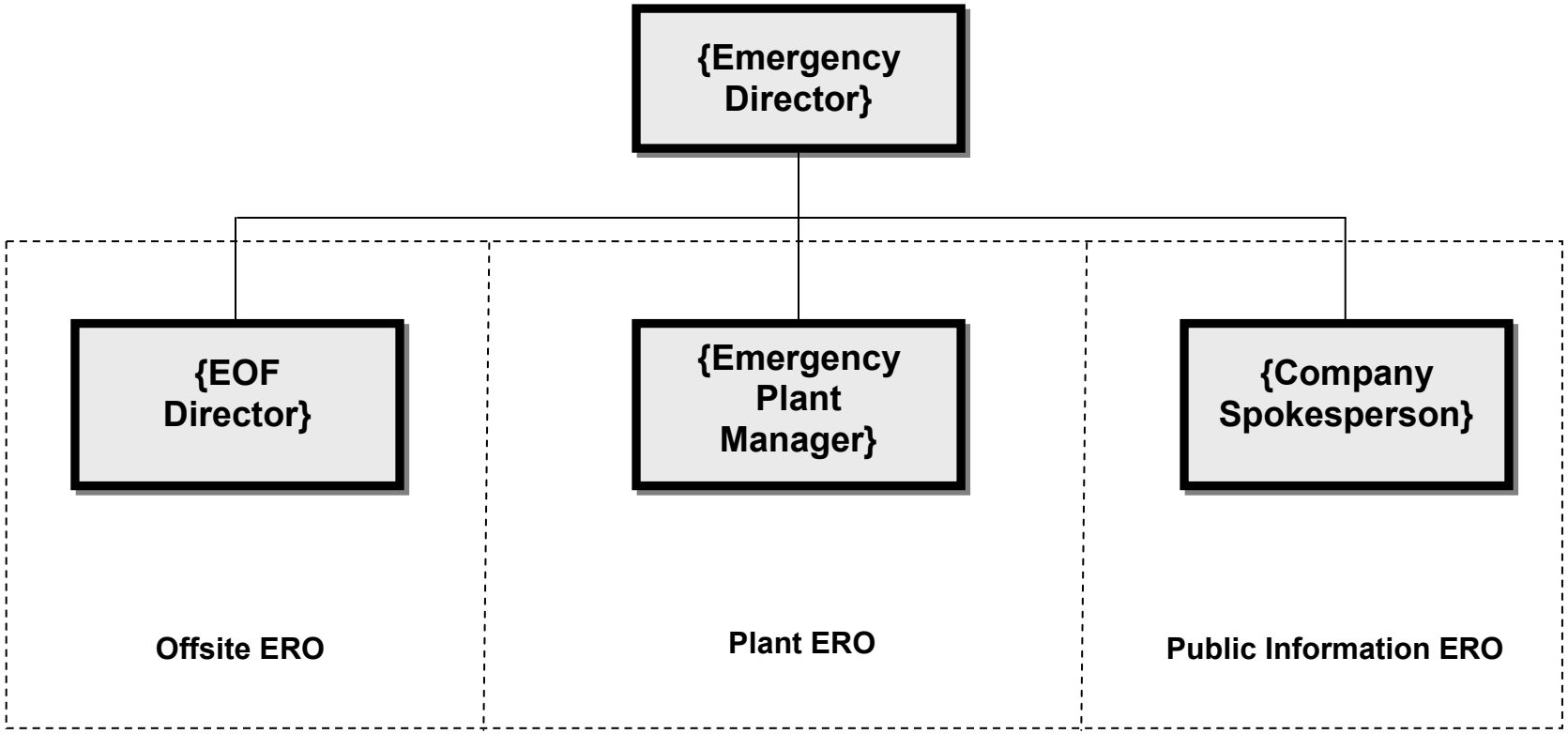

Figure B-1b: Emergency Onsite Organization

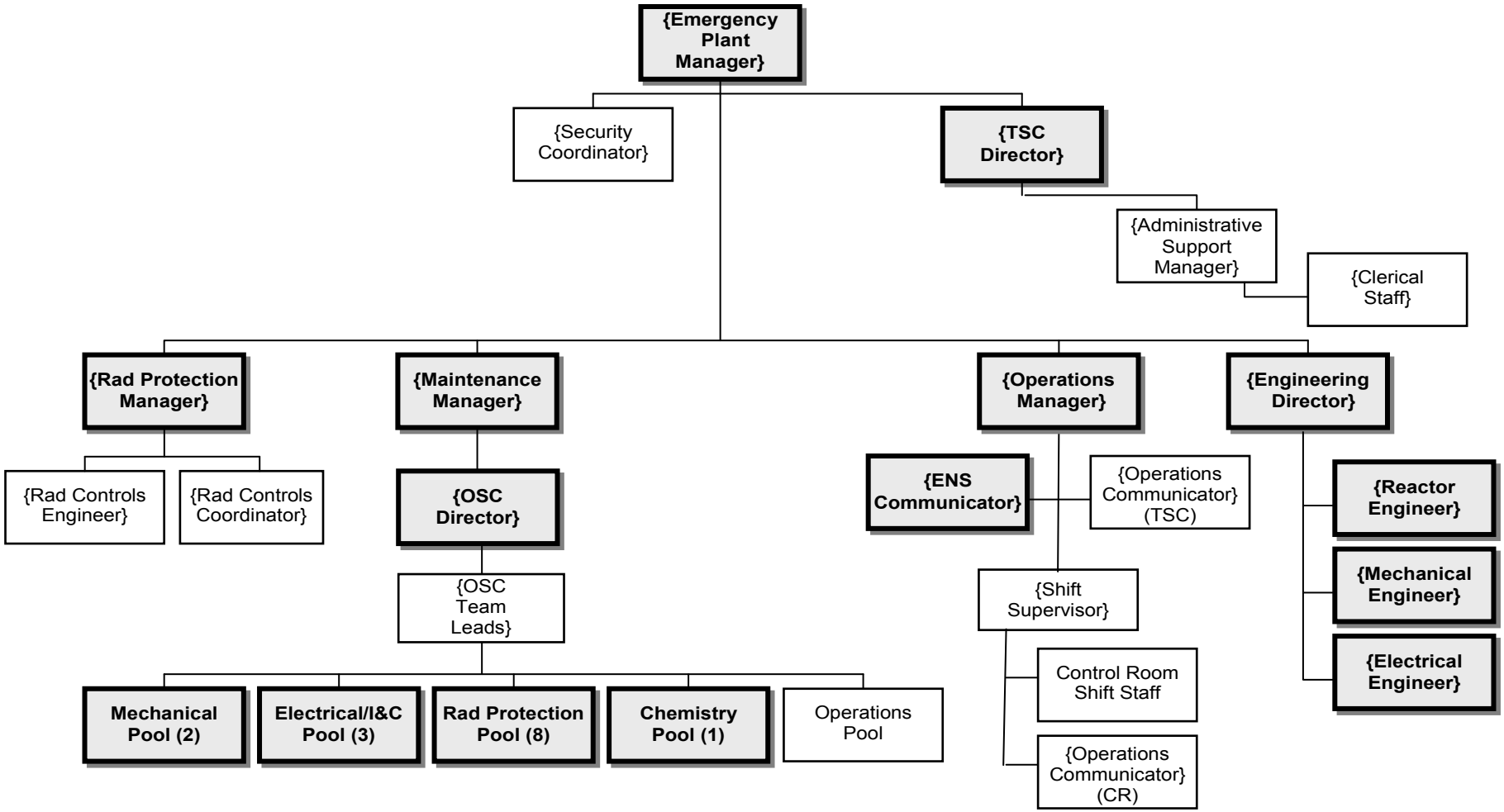

Shaded/Bold Boxes indicate minimum staffing positions.

ERO response pool personnel do not include the on-shift complement.

Figure B-1c: Emergency Offsite Organization

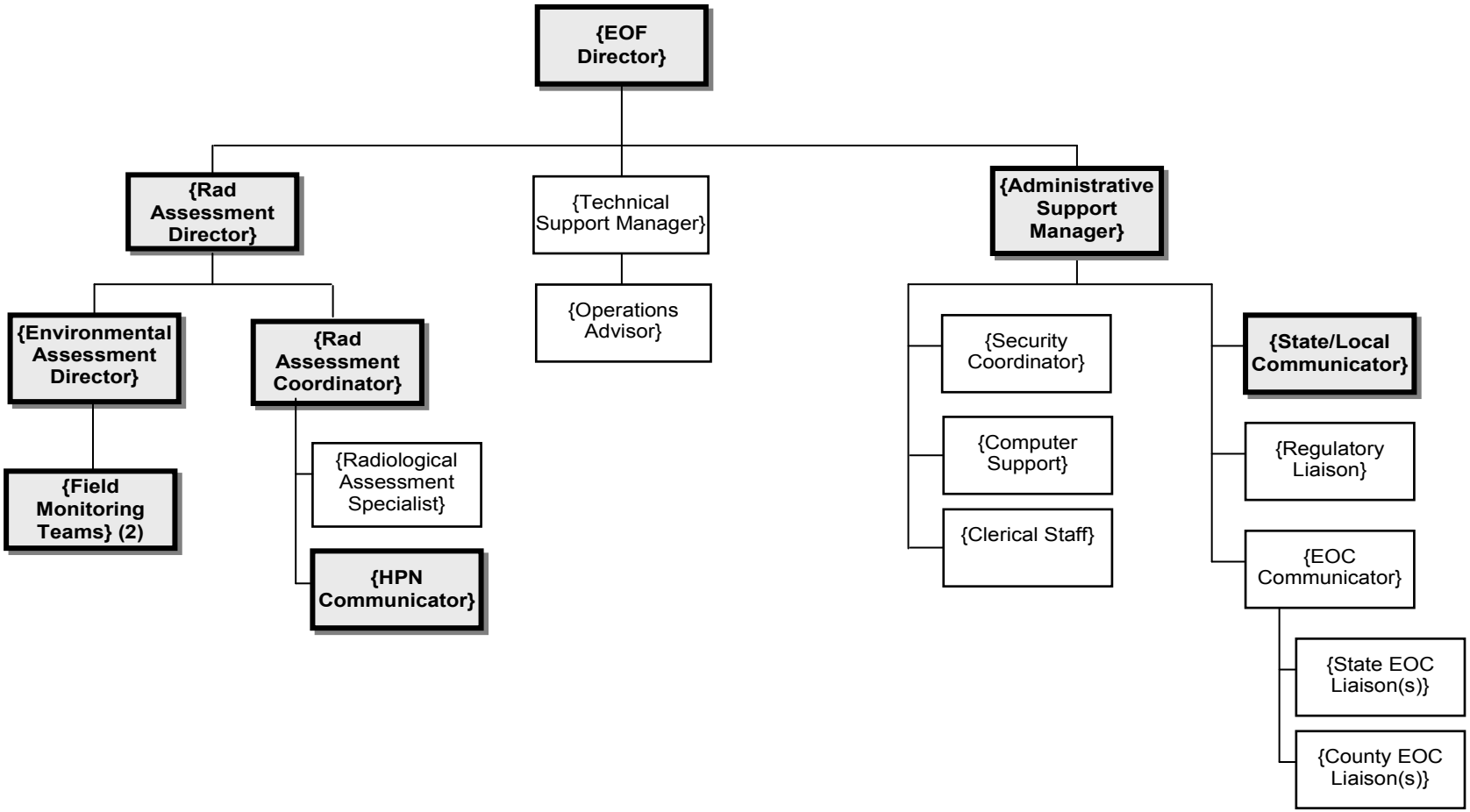

Shaded/Bold Boxes indicate minimum staffing positions.

ERO response pool personnel do not include the on-shift complement.

Figure B-1d: Emergency Public Information Organization

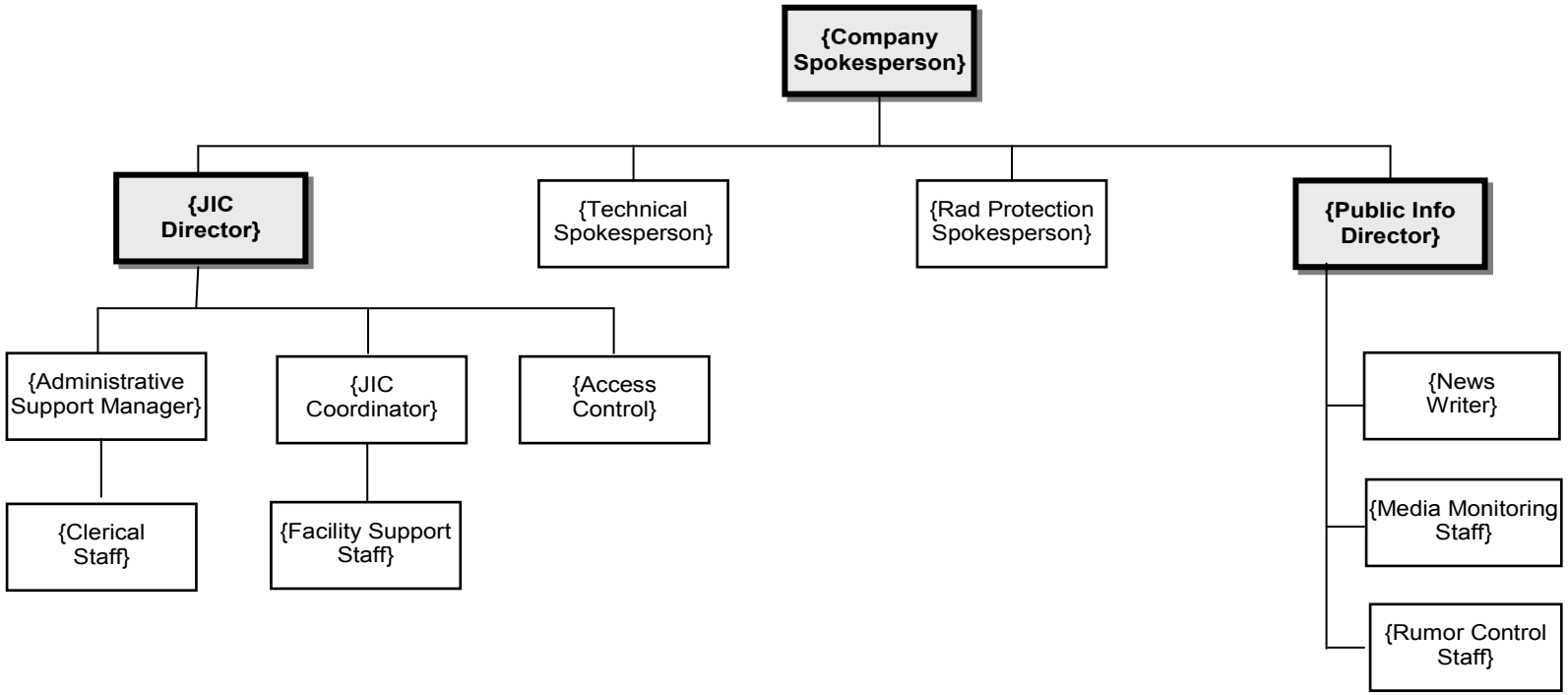

Shaded/Bold Boxes indicate minimum staffing positions.

ERO response pool personnel do not include the on-shift complement.

Section C: Emergency Response Support and Resources

This section describes the provisions for requesting and effectively utilizing support resources and for accommodating offsite officials at the Licensee emergency response facilities.

1. Federal Response Support and Resources

Assistance is available from federal agencies through the National Response Plan (NRP). The lead federal agency who provides direct assistance to the Licensee during an emergency is the Nuclear Regulatory Commission (NRC). Other federal agencies, such as the Federal Emergency Management Agency (FEMA) and the Department of Energy (DOE), provide assistance to the {state} through implementation of the NRP.

a. Sections A and B of this plan identify the specific individuals by title who are authorized to request federal assistance.

b. Federal agencies that may provide assistance in direct support of the Licensee in the event of an accident are identified in Section A of this plan. If needed, federal resources are made available to the Licensee in an expeditious and timely manner.

c. Each emergency response facility has the equipment and communications capability necessary for a continuous high level of response, interaction, and communication among key personnel during emergency conditions. The emergency facilities are able to accommodate federal representatives with working areas provided for their use. Accommodations for the expected site response teams assume the following approximate numbers for each facility:

Facility	Accommodations
EOF	16
TSC	5
CR	1
JIC	10

2. Liaisons

a. The NRC, FEMA, and the {state}(s) may dispatch representatives to the EOF where accommodations have been provided.

b. At the Alert level and above, Licensee personnel may be assigned as liaisons to the requesting {state} and/or county/city/town Emergency Operations Center (EOCs). These representatives act as technical liaisons to interpret emergency action levels and protective action recommendations made by the Plant's ERO.

3. Radiological Laboratories

Support of the radiation monitoring and analysis effort is provided by an onsite laboratory. The onsite laboratory is the central point for receipt and analysis of all onsite samples and includes equipment for chemical analyses and for the analysis of radioactivity.

Additional facilities for counting and analyzing samples can be provided by contracted laboratory services or arrangements with other nuclear facilities. These laboratories can act as backup facilities in the event that the plant's counting room and laboratory become unusable or the offsite radiological monitoring and environmental sampling operation exceeds the capacity of the site capabilities during an emergency. Additional outside analytical assistance may be requested from {state} and federal agencies.

The laboratories have the capability of analyzing terrestrial, marine, and air samples. Their common instrumentation includes a multi-channel analyzer used to determine the isotopic content in a sample, a liquid scintillation counter for tritium analyses, and gas proportional counter for gross alpha, and gross beta activity.

4. Other Assistance

Through INPO other companies operating nuclear facilities are available to provide certain types of assistance and support, including technicians, engineering, design, consultation, whole body counting, and dosimetry evaluation and equipment. Additional facilities, organizations, and individuals, as listed in the Emergency Telephone Directory, are available and may be used in support of emergency response. In addition, American Nuclear Insurers (ANI) provides insurance to cover the Licensee legal liability up to the limits imposed by the Price-Anderson Act, for bodily injury and/or property damage caused by the nuclear energy hazard resulting from an incident at the plant. Written agreements which describe the level of assistance and resources provided to the Licensee by external sources are included in Appendix 3 as applicable.

Section D: Emergency Classification System

This section describes the classification and emergency action level scheme used to determine the minimum response to an abnormal event at the site. This scheme is based on plant systems, effluent parameters, and operating procedures. The initial response of federal, {state}, and local agencies is dependent upon information provided by the ERO. The plant's Emergency Preparedness Staff works closely with the {state} and local agencies to ensure consistency in classification schemes and procedural interfaces.

1. Emergency Classification System

The E-Plan provides for classification of emergencies into four (4) categories or conditions, covering the postulated spectrum of emergency situations. They are: Notification of Unusual Event (referred to as Unusual Event), Alert, Site Area Emergency, and General Emergency. Each classification is characterized by Emergency Action Levels (EALs) or event initiating conditions and address emergencies of increasing severity.

a. Unusual Event - Events are in progress or have occurred which indicate a potential degradation of the level of safety of the plant or indicate a security threat to facility protection has been initiated. No release of radioactive material requiring offsite response or monitoring are expected unless further degradation of safety systems occurs.

This is the least severe of the four (4) levels. The purpose of this classification is to bring response personnel and offsite agencies to a state of readiness in the event the situation degrades and to provide systematic handling of information and decision making. The {Shift Supervisor}, as {Interim Emergency Director} will classify an Unusual Event.

Required actions at this classification include:

- Notifications to site management.
- Notification, within 15 minutes, of the {state} and local communities.
- At the discretion of the {Emergency Director} or site management, full or selective staffing of the TSC, OSC and EOF may be initiated.
- Notification of the Nuclear Regulatory Commission (NRC) as soon as possible but within 60 minutes of classification.
- Assessment of the situation and response as necessary, which may include escalating to a higher classification if conditions warrant.
- When the event is terminated, close-out is performed over communication links to offsite authorities participating in the response (i.e., NRC, {state}, local), followed by formal transmission of a {state}/local notification form within 24 hours.

b. Alert - Events are in progress or have occurred which involve an actual or potential substantial degradation of the level of safety of the plant or a security event that involves probable life threatening risk to site personnel or damage to site equipment because of HOSTILE ACTION. Any releases are expected to be limited to small fractions of EPA Protective Action Guideline exposure levels.

The purpose of this classification is to ensure that emergency response personnel are readily available and to provide offsite authorities with current status information. An Alert will be classified as the initiating event or as escalation from an Unusual Event. In either case, the classification will most likely made by the {Shift Supervisor} ({Interim Emergency Director}) prior to the transfer of Command and Control.

Required actions at this classification include:

- Notifications to site management.
- Notification, within 15 minutes, of the {state} and local communities. The EOF will assume {state} update responsibilities.
- Activation of the TSC, OSC and the EOF. The JIC organization may be activated at the Alert level.
- Transfer of Command and Control.
- Notification of the NRC as soon as possible but within 60 minutes of classification.
- Notification of INPO and ANI.
- Assessment of the situation and response as necessary, which may include escalating to a higher classification if conditions warrant.
- On-site and off-site Monitoring Teams are sent to staging areas or dispatched to monitor for releases of radiation to the environment.
- Keeping offsite authorities informed of plant status by providing periodic updates to include meteorological and radiological data.
- When the event is terminated, notification is performed over communication links followed by an Initial Incident Report to offsite authorities participating in the response (i.e., NRC, {state}, local) within 8 hours.

c. Site Area Emergency - Events are in progress or have occurred which involve an actual or likely major failures of plant functions needed for protection of the public or HOSTILE ACTION that results in intentional damage or malicious acts; 1) toward site personnel or equipment that could lead to the likely failure of or; 2) that prevent effective access to equipment needed for the protection of the public. Any releases are not expected to result in exposure levels which exceed EPA Protective Action Guideline exposure levels beyond the site boundary.

The purpose of this classification, in addition to those of the Alert level, is to ensure that all emergency response centers are manned and provisions are made for information updates to the public through offsite authorities and the news media. The classification will most likely be made by the {Emergency Plant Manager} following activation of the TSC.

Required actions at this classification, in addition to those listed under the Alert level, include:

- Activation of the JIC.
- If not previously performed, Assembly/Accountability shall be performed and Site Evacuation of non-essential personnel shall be initiated.
- Keeping offsite authorities informed of plant status by providing periodic updates to include meteorological data and projected or actual doses for any releases that have occurred.

d. General Emergency - Events are in progress or have occurred which involve actual or imminent substantial core degradation or melting with potential for loss of containment integrity or HOSTILE ACTION that results in an actual loss of physical control of the facility. Releases can be reasonably expected to exceed EPA Protective Action Guideline exposure levels offsite for more than the immediate site area.

The purpose of this classification, in addition to those of the Site Area Emergency level, is to initiate predetermined protective actions for the public and provide continuous assessment of information from monitoring groups. The classification will most likely be made by the {Emergency Plant Manager} following activation of the TSC.

Required actions at this classification, in addition to those listed under the Alert and Site Area Emergency, include:

- A Protective Action Recommendation will be determined.
- Assessment of the situation and response as necessary.

e. {Classification Downgrading: The Licensee policy is that emergency classifications shall not be downgraded to a lower classification. Once declared, the event shall remain in effect until no Classification is warranted, a higher classification is required or until such time as conditions warrant termination and entry into the Recovery Phase.}

f. Guidance for Termination of an Emergency: The purpose of terminating an emergency is to provide an orderly turnover of plant control from the Emergency Response Organizations to the normal {CCNPP Unit 3} plant organization. Termination of the emergency is authorized by the {Emergency Director} in Command and Control. The considerations discussed in Section M.1.b must be performed prior to exiting the emergency event. Consultation with governmental agencies and other parties should be conducted prior to termination of an event classified as Site Area or General Emergency. Notifications shall be transmitted to appropriate agencies to terminate an event. When an event classified at an Alert or higher is terminated a Recovery Phase will be entered.

   Recovery Phase: That period when the emergency phase is over and activities are being taken to return the situation to a normal {state} (acceptable condition). The plant is under control and no potential for further degradation to the plant or the environment is believed to exist.

   Entry into the Recovery Phase will be authorized by the {Emergency Director} after consultation with the {Emergency Plant Manager} and offsite authorities.

   Required actions for Recovery include:

   - The affected {State}(s) and the NRC should be consulted prior to entry into Recovery.
   - Notifications will be made to site management, {state}(s), local authorities and the NRC.
   - A Recovery organization will be established to manage repairs to return the Unit to an acceptable condition, and support environmental monitoring activities as requested in coordination with Federal and {state} efforts.
   - INPO and ANI are notified of Recovery phase.

g. Nuclear Security Plan: {CCNPP Unit 3} has a Security Plan that complies with the requirements of 10 CFR 73. The interface between the E-Plan and the Security Plan is one of parallel operation. The plans are compatible. The E-Plan response measures, once initiated, are executed in parallel with measures taken in accordance with the Security Plan. During a classified event the individual in overall command and control has responsibility for both operations.

Threats made to the Licensee facilities are evaluated in accordance with established threat assessment procedures and the respective Security Plans. The Security Plan identifies situations that could be initiating conditions for EAL classifications. Contingency events include bomb threats, attack threats, civil disturbances, protected area intrusions, loss of guard/post contact, vital area intrusions, bomb devices discovered, loss of guard force, hostages, extortion, fire/explosions, internal disturbances, security communications failure, and obvious attempts of tampering. The Security Plan provides guidance for decisions and actions to be taken for each security contingency event. As guidance, the Security Plan allows for differing responses depending upon the assessment of the actual situation within each contingency event classification.

The assessment of any security contingency event and the decision to initiate, or not to implement the E-Plan, will be the responsibility of the {Shift Supervisor} or {Emergency Plant Manager}. All identified security contingency events have the potential of being assessed as initiating conditions for a radiological emergency declaration.

Determination of a credible security threat may require the staffing of emergency response facilities based on the classification of an Unusual Event per the Emergency Action Levels (EALs).

2. Emergency Action Levels

The {CCNPP Unit 3 Annex} includes Unit Specific Emergency Action Levels (EALs) consistent with the general class descriptions and provided in NEI guidance documentation in accordance with Regulatory Guide 1.101, “Emergency Planning and Preparedness for Nuclear Power Reactors.” Where possible, these EALs will be related to plant instrumentation readings.

Emergency classifications are characterized by Emergency Action Levels (EALs). The Threshold Values are referenced whenever an Initiating Condition is reached. An Initiating Condition is one of a predetermined subset of unit conditions where either the potential exists for a radiological emergency, or such an emergency has occurred. Defined in this manner, an Initiating Condition is an emergency condition, which sets it apart from the broad class of conditions that may or may not have the potential to escalate into a radiological emergency. Initiating Conditions are arranged in one of the Recognition Categories.

EALs are for unplanned events. A planned evolution involves preplanning to address the limitations imposed by the condition, the performance of required surveillance testing, and the implementation of specific controls prior to knowingly entering the condition. Planned evolutions to test, manipulate, repair, perform maintenance or modifications to systems and equipment that result in an EAL Threshold Value being met or exceeded are not subject to classification and activation requirements as long as the evolution proceeds as planned. However, these conditions may be subject to the reporting requirements of 10 CFR 50.72 and/or 10 CFR 50.73.

An emergency is classified after assessing abnormal plant conditions and comparing them to EAL Threshold Values for the appropriate Initiating Conditions. Classifications are based on the evaluation of each unit for multi-reactor sites. Matrix tables organized by recognition categories are used to facilitate the comparison. The matrix tables are used when the unit is in the Technical Specification defined modes of Power Operations (for classifications purposes, startup evolutions are included in the Power Operations mode), Hot Standby, Hot Shutdown and Cold Shutdown or Refueling (for classification purposes a defueled plant will be considered in the Refueling mode).

All recognition categories are reviewed for applicability prior to classification. The initiating conditions are coded with a letter and/or number designator. All initiating conditions, which describe the severity of a common condition (series), have the same initial designator.

3. Offsite Classification Systems

The Licensee works with the {state} to ensure consistency between classification schemes. The initial EALs will be discussed with and agreed upon by the {state} and local authorities and approved by the NRC. Thereafter, the content of the EALs shall be reviewed with the {state} and local authorities on an annual basis and significant changes approved by the NRC. Concurrence is obtained from {state} and local authorities for EAL changes that significantly impact the Initiating Conditions or technical bases.

4. Offsite Emergency Procedures

The Licensee works with the {state} and local authorities to ensure that procedures are in place that provide for emergency actions to be taken which are consistent with the protective actions recommended by the site, accounting for local offsite conditions that exist at the time of the emergency.

Section E: Notification Methods and Procedures

This section describes the notification of {state} and local response organizations and {CCNPP Unit 3} emergency response personnel. It outlines the content of initial and follow-up messages to response organizations within the Plume Exposure Pathway Emergency Planning Zone (EPZ).

1. Bases for Emergency Response Organization Notification

The Licensee, in cooperation with {state} and local authorities, has established mutually agreeable methods and procedures for notification of offsite response organizations consistent with the emergency classification and action level scheme. Notifications to offsite agencies include a means of verification or authentication such as the use of dedicated communications networks, verification code words, or providing call back verification phone numbers.

{Notification/Classification for Multi-Unit Emergencies: when the classification involves multi-units of a multi-unit facility (i.e., tornado or earthquake), the classification shall be reported as affecting all units.

In situations when multiple units of a multi-unit facility are affected by emergency events, but the events are not related or the classification for each unit is different, notification will be made for the highest classification. Clarification of the relationship between the classification levels determined for the units should be provided in the periodic state and NRC updates.

In situations when one unit is affected by unrelated events, notification will be made for the highest classification via the State/Local notification and the second event information provided in the periodic state updates.}

Notification for Transportation Accidents: A Transportation Accident is defined in 49 CFR 171.15 and 49 CFR 171.16. If a Transportation Accident involving material in the custody of {CCNPP Unit 3} occurs, the Licensee will notify the appropriate internal and offsite agencies in accordance with Licensee procedures.

2. Notification and Mobilization of Emergency Response Personnel

Emergency implementing procedures are established for notification and mobilization of emergency response personnel as follows:

a. Onsite: When an emergency is declared, reclassified, or terminated an announcement is made (over the plant public address system or by other means) that includes the emergency classification declared and response actions to be taken by site personnel.

At the Unusual Event classification, select ERO augmentation personnel are notified and requested to remain available to respond. At an Alert classification or higher ERO augmentation personnel are notified for activation of the TSC, OSC, EOF, and, if determined appropriate, the JIC using the ERO notification system or via established back-up methods. The JIC is activated at the Site Area Emergency.

b. Offsite: Notifications are promptly made to offsite emergency response organizations as follows:

1) {State}/Local Agencies: A notification shall be made within fifteen (15) minutes of:

- The initial emergency classification.
- Classification escalation.
- The issuance of or change to a Protective Action Recommendation (PAR) for the general public.
- Changes in radiological release status, occurring outside of an event classification or PAR notification, based on an agreement with the {state}(s).

The {state} / local emergency warning points are notified using a dedicated notification system, or a commercial telephone line as backup. If the dedicated system is not used procedures will provide for a message authentication process.

A notification will also be initiated to cognizant {state}/local government agencies as soon as possible but within one hour of the termination of an event classification, or entry into Recovery Phase.

2) Nuclear Regulatory Commission (NRC): An event will be reported to the NRC Operations Center immediately after notification of the appropriate {state} or local agencies but not later than one (1) hour after the time of initial classification, escalation, termination or entry into the Recovery Phase. The NRC is notified by a dedicated telephone system called the Emergency Notification System (ENS). If the ENS is inoperative, the required notifications are made via commercial telephone service, other dedicated telephone service, or any other method that shall ensure that a report is made as soon as practical.

Specific requirements for the notifications to the NRC for classified emergency events are detailed in 10 CFR 50.72 with guidance provided in the site's notification procedures.

The computerized data link to the NRC, referred to as the Emergency Response Data System (ERDS), will be initiated within one hour of the declaration of an Alert classification or higher.

Mobilization of federal, {state}, and local response organizations is performed in accordance with their applicable emergency plan and procedures. At a minimum, mobilization of federal response organizations and activation of {state} and local EOCs is expected to occur at the declaration of a Site Area Emergency.

The {state} and local authorities are responsible for the process of notification of the general public.

c. Support Organizations: When an emergency is initially classified, escalated or terminated, notifications are promptly made to the following support organizations:

- Medical, rescue, and fire fighting support services are notified for assistance as the situation dictates.
- The Institute of Nuclear Power Operations (INPO) is notified at an Alert or higher classification with requests for assistance as necessary.
- The American Nuclear Insurers (ANI) are notified at an Alert or higher classification with requests for assistance as necessary.
- Vendor and contractor support services are notified for assistance as the situation dictates.

3. Initial Notification Messages

The Licensee, in conjunction with {state} and local authorities, has established the contents of the initial notification message form transmitted during a classified emergency. The contents of the form include, as a minimum:

- Designation ("This is a Drill" or "Actual Event").
- Identity of site.
- Event classification and nature of incident.
- EAL number.
- Non-technical event description (as agreed upon with {State} authorities).
- Date and time of declaration {(or entry into Recovery Phase or Termination)}.
- Whether a release is taking place (Note: “Release” means a radiological release attributable to the emergency event.)
- Wind direction and speed.

- Whether offsite protective measures may be necessary.
- Potentially affected {population and areas} (or Sectors as applicable) when a General Emergency is declared.

Notification approval, transmittal date and time, and offsite agencies contacted are recorded either on the notification form or in an event logbook.

4. Follow-up Messages

For all emergency classifications, update messages to {state} authorities will be provided at the time of the notification on a prearranged frequency. The facility in Command and Control is responsible for ensuring that the updates are completed. {State} updates contain the prearranged information plus any additional information requested at the time of the notification.

Follow-up notifications are provided to the NRC Operations Center as soon as possible, but not later than one (1) hour after significant new information is available involving:

a. location of incident and name and telephone number (or communications channel identification) of caller;

b. date/time of incident;

c. class of emergency;

d. type of actual or projected release (airborne, waterborne, surface spill), and estimated duration/impact times;

e. estimate of quantity of radioactive material released or being released and the points and height of releases;

f. chemical and physical form of released material, including estimates of the relative quantities and concentration of noble gases, iodines and particulates;

g. meteorological conditions at appropriate levels (wind speed, direction (to and from), indicator of stability, precipitation, if any);

h. actual or projected dose rates at site boundary; projected integrated dose at site boundary;

i. projected dose rates and integrated dose at the projected peak and at 2, 5 and 10 miles (3.2, 8, and 16 kilometers), including sector(s) affected;

j. estimate of any surface radioactive contamination in plant, onsite or offsite;

k. licensee emergency response actions underway;

l. recommended emergency actions, including protective measures;

m. request for any needed onsite support by offsite organizations; and

n. prognosis for worsening or termination of event based on plant information.

If requested by the NRC, an open, continuous communications channel will be maintained with the NRC Operations Center over the Emergency Notification System (ENS) and/or Health Physics Network (HPN) Circuits.

5. {State} and County Information Dissemination

The {state} and local emergency response plans describe procedures for {state} and local officials to make a public notification decision promptly (within about 15 minutes) on being informed by the plant of an emergency. The system for disseminating information to the public includes notification by pre-scripted messages through appropriate broadcast media such as the Emergency Alert System (EAS).

6. Notification of the Public

The capability exists for the prompt notification of the general public within the Plume Exposure Pathway Emergency Planning Zones (EPZs) for the Licensee sites covered under this plan.

This notification capability consists of two principal elements: (1) the {Public Alert and Notification Systems (PANS)} and (2) the Emergency Alerting System (EAS) radio stations.

- The {Public Alert and Notification System (PANS)} consists of fixed sirens. It may also include subsystems such as Tone Alert Radios, Reverse 911 Calling and vehicles with public address (PA) systems {and the Emergency Alert System}. Activation of the PANS sirens by the civil authorities will alert the public to turn on their radios to a local EAS radio station for detailed information on the emergency situation.

- The Emergency Alerting System (EAS) is a network of local radio stations prepared to transmit or relay emergency information and instructions from the civil authorities to the general public.

{PANS is operated by local governmental agencies and maintained by the Licensee.} To assure {PANS} is maintained in an operational readiness posture, {the local agencies have agreed to test the system (by sounding the sirens)} on a periodic basis that meets or exceeds FEMA guidance and to report inoperable equipment to designated maintenance personnel. The goal of the testing and maintenance program is to identify inoperable equipment in a timely manner and to restore equipment to a functional status commensurate with FEMA operability requirements as referenced in FEMA-REP-10, "Guide for the Evaluation of Alert and Notification Systems for Nuclear Power Plants" Section E.6.2.1. In addition to this routine test and repair program, preventive maintenance of {PANS} will be performed on an {ongoing basis}.

{The activation of the PANS sirens and operation of the system is discussed in detail in the state specific response plans.}

7. Messages to the Public

The {respective state(s)} have developed EAS messages for the public consistent with the classification scheme. These draft messages are included as part of the {states} Emergency Plan and contain instructions with regard to specific protective actions to be taken by occupants and visitors of affected areas. Messages may include instructions such as: take shelter and go indoors, close windows and doors, turn off ventilation systems; directions given for evacuation; directions to stay tuned to specific stations for further information, ad-hoc respiratory protection, (e.g., handkerchief over mouth, etc.). The Licensee will provide support for the content of these messages when requested.

Section F: Emergency Communications

This section describes the provisions utilized for prompt communications among principal emergency response organizations, communications with the ERO and communications with the general public.

1. Communications/Notifications

The Licensee has extensive and reliable communication systems installed at {CCNPP Unit 3}. Examples of the communications network include systems such as normal and dedicated telephone lines on landlines, microwave and fiber-optic voice channels, cell phones, satellite phones, base and mobile radio units, and computer peripherals. This network provides:

- Voice communication through normal telephone, dedicated line and automatic ring-down between selected facilities, conference call capability, speaker phones, and operator assistance where required.
- Communications between emergency vehicles and appropriate fixed locations, as well as with {state} mobile units and fixed locations.
- Facsimile, computer network, and modem transmission.

Figure F-1 depicts the initial notification paths and the organizational titles from the Licensee Emergency Response Facilities (ERFs) to federal, {state} and local emergency response organizations, and industry support agencies. The primary and alternate methods of communication, and the NRC communications network, are illustrated on Figures F-2 and F-3.

a. The Licensee maintains the capability to make initial notifications to the designated offsite agencies on a 24-hour per day basis. The offsite notification system provides communications to {state} and local warning points and Emergency Operations Centers from the CR, TSC, and EOF. Backup methods include facsimile and commercial telephone lines. {State} and local warning points are continuously staffed.

b-d. The Licensee has established several communication systems that ensure reliable and timely exchange of information necessary to provide effective Command and Control over any emergency response; (1) between the site and {state} and local agencies within the EPZs, (2) with federal emergency response organizations, (3) between the plant, the EOF, and the {state} and local EOCs, and (4) between Emergency Response Facilities and Monitoring Teams. A general description of the systems is as follows:

1) {Offsite notification system}: The {offsite notification system} is a dedicated communications system that has been installed for the purpose of notifying {state} and local authorities of declared nuclear emergencies. This system links together the {CCNPP'} Control Room(s), the EOF, TSC(s) and {state} and local authorities {warning points and EOCs} as appropriate.

2) Dedicated Phone Lines: A dedicated phone link is established by limiting a phone line to one purpose, blocking its use for all other purposes. Several dedicated telephone links have been established for use by the ERO to perform the following key communications tasks. Some of these tasks are listed below:

   - {Communications between the Control Room, the TSC and/or the OSC to coordinate the dispatching of emergency damage control teams from the OSC (see Figure F-2).}

   - {Communications between the Control Room, the TSC and the EOF to monitor the activities of the Control Room staff and provide technical data to facilities outside the Control Room (see Figure F-2).}

   - {Conferencing between the TSC and the EOF to communicate mitigating activities and priorities for the site to the EOF (see Figure F-2).}

   - {Communications between {Emergency Director}, the Control Room, TSC, and the EOF (see Figure F-2).}

3) Private Branch Exchange (PBX) Telephone System: The PBX telephone system provides communication capability between telephones located within the plant. The PBX is used to connect the CR, TSC, EOF, and OSC. The PBX telephone system also provides for outside communications through interconnections with the corporate telephone communications system and commercial telephone lines.

4) Local Commercial Telephone System: This system provides standard commercial telephone service through the public infrastructure, consisting of central offices and the wire line and microwave carrier. The commercial telephone system includes connections to PBX, emergency telephone system, dedicated lines to emergency facilities, and lines to the JICs. The commercial vendor provides primary and secondary power for their lines at their central office.

5) Emergency Response Data System (ERDS): The ERDS will supply the NRC with selected plant data points on a near real time basis. ERDS is activated by the ERO as soon as possible but not later than one hour after declaration of an Alert, Site Area Emergency or General Emergency. The selected data points are transmitted via modem to the NRC at approximately 1-minute intervals.

6) Monitoring Team Communications: A separate communications system has been installed to allow coordinated environmental monitoring and assessment during an emergency. This system consists of the necessary hardware to allow communication between the {Control Room, TSC, EOF, and mobile units} in the monitoring team vehicles. Commercial cell phones or other means are available as back up to the primary monitoring team communications system.

In addition, site communication links exist to ensure appropriate information transfer capabilities during an emergency. The site may also utilize its Public Address System, {Video Conferencing Systems}, site radios and pagers to augment its emergency communications.

e. ERO Notification System: The Licensee utilizes an automated ERO notification system to rapidly notify members of the ERO. The system consists of a computer with modem equipment capable of initiating and receiving telephone calls. When contact is made, the system automatically requests security identification and then responds. One of the calls made by the system is to the paging system vendor. The pager vendor's system accepts group and individual numbers from the ERO notification system, activating several radio transmitters which, in turn, activate personal pagers belonging to members of the ERO. Implementing procedures specify the course of action to be taken if the ERO notification system fails. In this situation, these procedures require site personnel to manually activate the ERO group page feature and/or directly call-out key emergency response personnel.

f. NRC Communications (ENS and HPN)

Communications with the NRC Operations Center will be performed via the NRC ENS and HPN circuits or commercial telephone line. Information is normally communicated from an approved NRC Event Notification Worksheet prior to establishing an open ENS and/or HPN line.

Installation and use of these NRC telephones is under the direction of the NRC (see Figure F-3).

1) Emergency Notification System (ENS): Dedicated telephone equipment is in place between the site's Control Room and the NRC, with an extension of that line in the TSC. A separate line is available in the EOF with the capability of being patched with the site through the NRC. This line is used for NRC event notifications and status updates.

2) Health Physics Network (HPN): There also exists a separate dedicated telephone between the NRC, the TSC, and EOF for conveying health physics information to the NRC as requested or as an open line.

2. Medical Communications

Communications are established with the primary and backup medical hospitals and transportation services via commercial telephone that is accessed by site personnel.

3. Communications Testing

Communications equipment is checked in accordance with Section H.10. Communications drills between the Licensee and {state} and local government facilities are conducted in accordance with Section N.2.a. In addition, minimum siren testing is performed as follows:

{Silent Test..... At least weekly}

{Growl (or Equipment) Test.....Quarterly and during preventive maintenance}

{Full Volume Test..... Annually}

Figure F-1: Notification Scheme (For Full Augmentation)

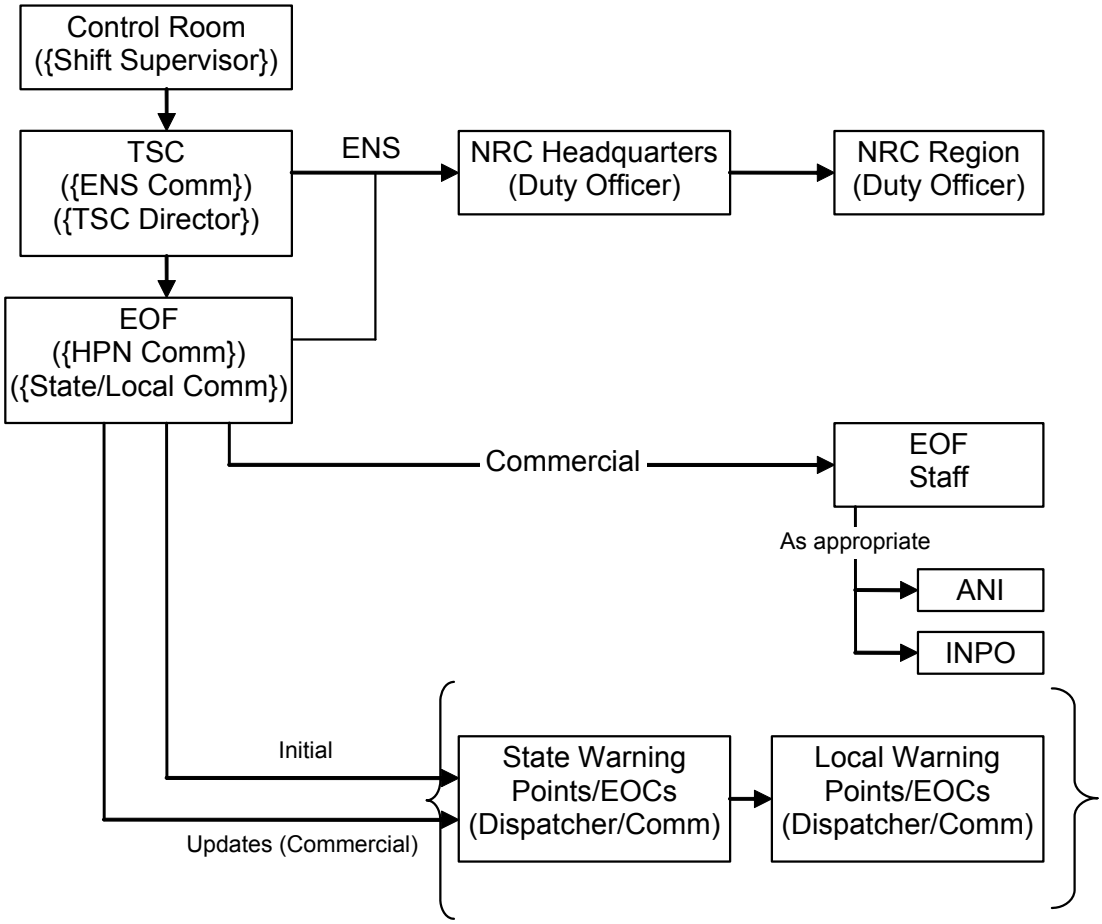

Figure F-2: ERF Communications Matrix

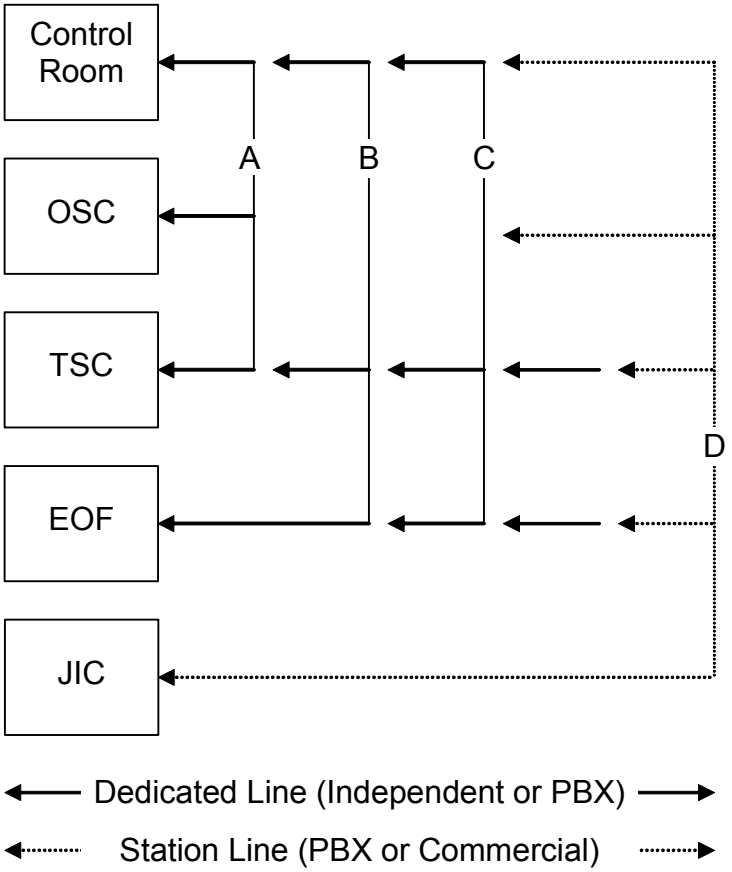

A = {Damage control line (used to coordinate sending teams to take corrective actions) between the OSC, TSC, and Control Room.}

B = {Directors hotline line between the Control Room, TSC and EOF.}

C = {Operations line (used to transmit plant data and operations actions) between the TSC, Control Room and EOF.}

D = {Site telephone line.}

{Note: Other conferencing and ring-down capabilities may be used to enhance communications flow between ERFs and ERO members.}

Figure F-3: NRC Communications for Nuclear Response

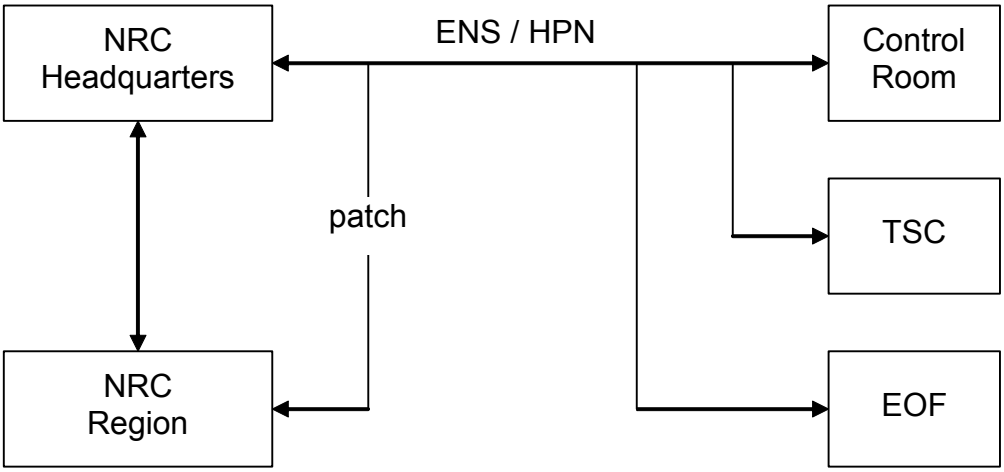

NOTE: ENS and HPN circuits may use the federally maintained system, company tie lines or PBX as dedicated primary communications systems and have commercial backups.

Section G: Public Education and Information

This section describes the Licensee public education and information program. It outlines the methods for distributing public information materials on an annual basis and describes how the public is informed in the event of an emergency.

1. Public Information Publication

{The state has overall responsibility for maintaining a continuing disaster preparedness public education program.} The emergency public information publication for the Licensee nuclear site{s} is updated annually, in coordination with state and local agencies, to address how the general public is notified and what their actions should be in an emergency. The Licensee distributes the publication on an annual basis by mail to all residents within the ten-mile (16-kilometer) plume exposure EPZs and to appropriate locations where a transient population may obtain a copy. Signs or other measures shall be used for transient population which would refer the transient to the telephone directory or other source of local emergency information. The public information publication includes the following information:

a. Educational information on radiation.

b. A description of the times that require public notification, public notification system and what to do if a take-shelter or evacuate recommendation is given.

c. A map of major evacuation routes.

d. A list of communities likely to serve as host shelter areas and instructions on how to obtain additional information, especially for the disabled or their caretakers and those without transportation.

e. Appropriate radio and television frequencies which would provide information on the event.

2. Public Education Materials

Public information publications instruct the public to go indoors and turn on their radios when they hear {PANS} sirens operating. These publications also identify the local radio stations to which the public should tune in for information related to the emergency.

3. Media Accommodations

a. A {communications and public affairs group} is notified when an Unusual Event or higher Emergency condition exists. They will handle public and media inquires in the early stages of the event (until the JIC is activated) by distributing background information, news statements, and providing information to company management.

1) The Public Information Emergency Response Organization: The Public Information ERO may be activated at any time at the discretion of site management. However, normally when there is a procedural requirement to activate the EOF, the Public Information ERO {should} also be activated. It is required to be activated at a Site Area or General Emergency.

The primary purpose of the Public Information ERO is to disseminate information from the Licensee's ERO about the emergency events to the public, via the news media. However, the authority for issuance of news releases for the classification of an Unusual Event or prior to ERO activation will always reside with the {communications and public affairs group}. Upon activation, the Public Information ERO has the responsibility and authority for issuance of news releases to the public.

The Public Information ERO is comprised of senior managers from the Licensee who will function as spokespersons, and other Licensee individuals. The spokespersons disseminate information to the news media/public concerning the emergency events out of a Joint Information Center (JIC).

2) The Joint Information Center (JIC): The JIC is the facility in which media personnel gather to receive information related to the emergency event. The JIC is the location where approved news releases will be provided to the media for dissemination to the public. News releases are coordinated between the EOF and JIC personnel and {State} and/or Federal representatives in the JIC. Public information personnel operate from the EOF and the JIC, which is under the direction of the {Company Spokesperson} and functions as the single point contact to interface with Federal, {State}, and local authorities who are responsible for disseminating information to the public.

The site has a designated JIC. The JIC is equipped with appropriate seating, lighting and visual aids to allow for public announcements and briefings to be given to the news media. Additionally, the JIC is equipped with commercial telephone lines for making outgoing calls. The Public Information ERO functions from the {JIC and EOF} in preparing and releasing licensee information about the emergency event.

Functions of the JIC include:

- Serving as the primary location for accumulating accurate and current information regarding the emergency conditions and writing news releases.
- Providing work space and phones for public information personnel from the {state}, counties, NRC, FEMA, and industry-related organizations.
- Providing telephones for use by the news media personnel.
- Providing responses to media inquiries through personnel monitoring telephones that the media can call for information about an emergency.

b. The news media is not normally permitted into the EOF during an emergency; however, the EOF can accommodate {State} and local media staff, if deemed necessary.

4. Coordination of Public Information

a. The JIC is staffed by Licensee and government public information representatives who will be the source of public information during an emergency at the site. The {Company Spokesperson} is the primary spokesperson for the Licensee. The {Company Spokesperson} has direct access to all necessary information (see Section B.5).

b. The JIC is staffed by federal, {state}, local, and licensee personnel to assure timely, periodic exchange and coordination of information. Representatives coordinate information prior to conducting news briefings.

c. Rumors or misinformation are identified during an emergency by the media/rumor control monitors. They respond to public and news media calls and monitor media reports.

5. Media Orientation

Emergency Preparedness, in conjunction with the Licensee {communications and public affairs group}, offers programs ({at least annually}) to acquaint news media with the E-Plan, information concerning radiation, and points of contact for release of public information in an emergency.

Section H: Emergency Facilities and Equipment

Onsite and offsite facilities are available for emergency assessment, communications, first aid and medical care, and damage control. Of particular importance are the Emergency Response Facilities (ERFs); the Control Room (CR), the Technical Support Center (TSC), the Operations Support Center (OSC), the Emergency Operations Facility (EOF), and the Joint Information Center (JIC).

This section describes the emergency facilities and equipment used by the Emergency Response Organization and outlines the requirements which aid in timely and accurate response actions. It also describes the surveillance programs used to monitor and ensure that these facilities and equipment are maintained in a high degree of constant readiness.

1. Control Room, Technical Support Center, and Operations Support Center

The Licensee has established TSC(s) and OSC(s), which are activated upon declaration of an Alert or higher classification. Until they become operational, required functions of these facilities are performed by Shift Personnel and directed from the Control Room.

a. Control Room: The Control Room(s) are the centralized onsite location from which the Nuclear Site's reactor(s) and major plant systems are operated. The Control Room(s) are equipped with instrumentation to supply detailed information on the reactors and major plant systems. The Control Room(s) are continuously staffed with qualified licensed operators. The Control Room is the first onsite facility to become involved with the response to emergency events. Control Room personnel must evaluate and effect control over the emergency and initiate activities necessary for coping with the emergency until such time that support centers can be activated. These activities shall include:

- Reactor and plant control.
- Initial direction of all plant related operations.
- Accident recognition, classification, mitigation and initial corrective actions.
- Alerting of onsite personnel.
- Activation of emergency response facilities and ERO notification.
- Notification of offsite agencies.
- Notification of appropriate individuals and activation of ERDS.
- Continuous evaluation of the magnitude and potential consequences of an incident.
- Initial dose projections.
- Recommendations for immediate protective actions for the public.

As other ERFs become activated, they will supply support to the Control Room(s). Overall Command and Control of the emergency will transfer to the TSC(s) or the EOF when they are properly staffed and ready to take over these responsibilities. Throughout all emergencies, the Control Room(s) maintain emergency activation status until normal operational status may be resumed.

b. Technical Support Center (TSC): {CCNPP Unit 3} has established unit TSC(s) for use during emergency situations by site management, technical, and engineering support personnel. The TSC is activated for all emergencies classified as Alert or higher. Activation for other events is optional. When activated the TSC functions include:

- Support for the Control Room's emergency response efforts.
- Performance of the non-delegable functions when in Command & Control.
- Continued evaluation of event classification.
- Assessment of the plant status and potential offsite impact.
- Coordination of emergency response actions.
- Notification of appropriate corporate and site management.
- Notification and update of the NRC via Emergency Notification System (ENS) including activation of Emergency Response Data System (ERDS).

The TSC is the onsite location utilized to support the Control Room for assessment of plant status and potential offsite impact, and for implementation of emergency actions. TSC provides technical data and information to the EOF.

Figure B-1b illustrates the staffing and organization of the TSC.

The TSC provides reliable voice communications to the Control Room, the OSC, the EOF, the NRC, and {state} and local Emergency Operations Centers. Additional communications capabilities are also available in the TSC (see Section F.1).

The TSC is sized to accommodate a minimum of 25 spaces and supporting equipment. This includes provisions for five NRC representatives.

Personnel in the TSC shall be protected from radiological hazards, including direct radiation and airborne contaminants under accident conditions with similar radiological habitability as Control Room personnel. To ensure adequate radiological protection, permanent radiation monitoring systems have been installed in the TSC and/or periodic radiation surveys are conducted. These systems indicate radiation dose rates and airborne radioactivity inside the TSC while in use. In addition, protective breathing apparatus (full-face air purifying respirators) and KI are available for use as required.

The TSC has access (either electronically or actual hard copies) to a complete set of as-built drawings and other records, including general arrangement diagrams, P&IDs, and the electrical schematics. The TSC has the capability to record and display vital plant data, in real time, to be used by knowledgeable individuals responsible for engineering and management support of reactor operations, and for implementation of emergency procedures.

c. Operations Support Center (OSC): Each station unit has established an OSC. The OSC is the onsite location where site support personnel report during an emergency and from which they will be dispatched for assignments or duties in support of emergency operations. The OSC shall be activated whenever the TSC is activated, but need not remain activated at the Alert level if its use is judged unnecessary by the {Emergency Plant Manager}. At the Site Area and General Emergency levels, the OSC or an alternate OSC shall be activated at all times. Activation for other events is optional. {CCNPP Unit 3} disciplines reporting to the OSC include, but are not limited to:

- Operating personnel not assigned to the Control Room,
- Radiation Protection Personnel,
- Chemistry Personnel,
- Maintenance Personnel (mechanical, electrical and I&C).

Figure B-1b illustrates the staffing and organization for the OSC.

Each OSC is equipped with communication links to the Control Room and the TSC (see Section F). A limited inventory of supplies will be kept for the OSC. This inventory will include respirators, protective clothing, flashlights and portable survey instruments.

d. Alternate Mustering Facility

An alternate near site location has been identified and equipped for security and other events which may prevent response of the ERO to the primary Emergency Response Facilities.

2. Emergency Operations Facility (EOF)

The EOF is the location where the {Emergency Director} will direct the ERO in evaluating and coordinating the overall company activities involved with an emergency. Activation of the EOF is mandatory upon declaration of an Alert or higher classification. The EOF provides for:

- Management of overall emergency response.
- Coordination of radiological and environmental assessments.
- Determination of recommended public protective actions.
- Management of recovery operations.
- Coordination of emergency response activities with Federal, {state}, and local agencies.

The EOF was designed with the following considerations:

- The location provides optimum functional and availability characteristics for carrying out overall strategic direction of the Licensee onsite and support operations, determination of public protective actions to be recommended to offsite officials, and coordination with Federal, {State} and local organizations.
- It is of sufficient size to accommodate about 50 people.
- It is equipped with reliable voice communications capabilities to the TSC, the Control Room, NRC, and {state} and local emergency operations centers. In addition, the EOF has facsimile and computer transmission capabilities.
- Equipment is provided to gather and display data needed in the EOF to analyze and exchange information on plant conditions with the Site. The EOF technical data system receives, processes, and displays information sufficient to perform assessments of the actual and potential onsite and offsite environmental consequences of an emergency condition.
- The EOF has ready access (either through hard copies or electronic media) to plant records, procedures, and emergency plans needed for effective overall management of the Licensee emergency response resources.

3. Emergency Operations Centers

EOCs operated by the {state} and local communities have been established to perform direction and control of emergency response functions.

The respective {state} EOCs are capable of continuous (24-hour) operations for a protracted period. These centers contain sufficient communications (radio, telephone, computer and Fax machines) equipment, maps, emergency plans, and status boards to provide the necessary interfaces with other federal, {state}, local, and site emergency facilities.

The county EOCs serve as Command and Control headquarters for local emergency response activities as well as a center for the coordination of communications to field units and to the {state} EOCs. These EOCs have the equipment necessary, (such as facsimile machines, telecommunications equipment, radio gear, photocopiers, wall maps, etc.) to carry out their emergency responsibilities.

4. Activation

The Licensee has put into place plans and procedures to ensure timely activation of its emergency response facilities. The {Shift Supervisor} (as {Interim Emergency Director}) will initiate a call-out in accordance with the implementing procedures. The ERO augmentation process identifies individuals who are capable of fulfilling the specific response functions that are listed in Table B-1a (located in {Unit 3 Annex}) and Table B-1b. This table was developed based on the functions listed in NUREG-0654, Table B-1.

Although the response time will vary due to factors such as weather and traffic conditions, {a goal of 60 minutes} for minimum staffing, following the declaration of an Alert or higher emergency classification, has been established for the ERO personnel responding to the site emergency facilities and the EOF. Additionally, plans have been developed to ensure timely functional activation and staffing of the JIC when the classification of Site Area Emergency is declared or at the direction of the {Emergency Director}.

{The Director in charge may elect to activate their facility without meeting minimum staffing; if it has been determined that sufficient personnel are available to fully respond to the specific event (this would not constitute a successful minimum staff response).}

5. Monitoring Equipment Onsite

The site is equipped with instrumentation for seismic monitoring, radiation monitoring, fire protection and meteorological monitoring. Instrumentation for the detection or analysis of emergency conditions is maintained in accordance with plant Technical Specifications, if applicable, or commitments made to the NRC. The actual instrumentation varies somewhat from unit to unit and thus will not be described in detail this plan. Additional details of the equipment will appear in {the CCNPP Unit 3 Annex}. This equipment includes but is not limited to the following:

a. Geophysical Monitors

1) Meteorological Instrumentation: A permanent meteorological monitoring station is located near the site for display and recording of wind speed, wind direction, and ambient and differential temperature for use in making offsite dose projections. Meteorological information is presented in the CR, TSC, and EOF by means of the plant computer system. This information is remotely interrogated using a computer or other data access terminal.

   Meteorological tower instrumentation includes sensors for measurement of wind speed, wind direction, and ambient temperature. A rain gauge is located at or near the base of the tower. Measurements of wind speed, direction, and temperature are made at 10 meters above grade and at a height above grade at which measurements will be representative of conditions at the stack top. A distance approximately ten times the obstruction height around the tower is maintained in accordance with established standards for meteorological measurements.

   With regard to the {CCNPP Unit 3} meteorological monitoring program, there has been a quality assurance program adopted from 10 CFR 50, Appendix B. However, since the meteorological facilities are not composed of structures, systems, and components that prevent or mitigate the consequences of postulated accidents and are not "safety related," not all aspects of 10 CFR 50, Appendix B, apply. Those aspects of quality assurance germane to supplying good meteorological information for a nuclear power plant were adopted into the quality assurance program.

   The National Weather Service (NWS), or regional weather forecast providers, may be contacted during severe weather periods. These providers analyze national and local weather in order to provide localized weather forecasts for the system or for the site area as appropriate.

2) Seismic Monitoring: The seismic monitoring system measures and records the acceleration (earthquake ground motion) of selected structures. Earthquakes produce frequency dependent accelerations which, when detected by the remote sensing devices, are permanently recorded as information which defines the seismic input. The system remains in a standby condition until an earthquake, above a preset target acceleration, causes the remote unit(s) to activate the recording circuits and signals the Main Control Room that a seismic event is being recorded.

3) Hydrological Monitors: The design basis flood, maximum precipitation, and other improbable, conceivable extremes in hydrologic natural phenomena and be used to show hydrological conditions are below or above any design limits for the Unit as detailed in the FSAR.

b. Radiological Monitors and Sampling

1) The Radiation Monitoring system: In-plant radiological measurements provide information that may help determine the nature, extent and source of emergency conditions. The radiological monitoring system is available to give early warning of a possible emergency and provides for a continuing evaluation of the situation in the Control Room. Radiation monitoring instruments are located at selected areas within the facility to detect, measure, and record radiation levels. In the event the radiation level should increase above a preset level, an alarm is initiated in the Control Room. Certain radiation monitoring instruments also alarm locally in selected areas of the facility. The radiation monitoring system is divided into 3 subsystems:

a) Area Radiation Monitors (ARMs) are used for the direct measurement of in-plant exposure rates. The ARM readings allow in-plant exposure rate determinations to be made remotely without requiring local hand-held meter surveys. This information may be used, initially, to aid in the determination of plant area accessibility. In addition to permanent monitors, portable Continuous Air Monitors (CAMs) measure airborne particulate and airborne iodine activities at various locations within the operating areas.

b) Process Radiation Monitors (PRMs) are used for the measurement of radioactive noble gas, iodine, and particulate concentrations in plant effluent and other gaseous and fluid streams.

c) The accident, or high range, radiation monitoring system monitors radiation levels at various locations within the operating area. These are high range instruments used to track radiation levels under accident or post accident conditions. These instruments include the containment high range radiation monitors.

The radiological monitoring system provides the necessary activity or radiation levels required for determining source terms in dose projection procedures. Key radiological monitoring system data is linked to the plant computer, which allows information to be passed to the TSC and EOF. The isotopic mix, including isotopes such as those in Table 3 of NUREG-0654, is based upon a default accident mix. Refer to the station FSAR for further detail on the radiological monitoring system capabilities and design.

2) Liquid and Gaseous Sampling Systems: The process sampling system consists of the normal sampling system and additional sampling panels located throughout the plant. Sampling systems are installed or can be modified to permit reactor coolant and containment atmosphere sampling even under severe accident conditions.

The sampling systems use a number of manual sampling techniques to enable reactor coolant and containment sampling operations over a wide range of plant conditions to allow operator actions to be taken to mitigate and control the course of an accident. Refer to the FSAR for further detail on sampling capabilities.

3) Portable Radiation Monitoring Equipment: Portable radiation survey instruments are available for a wide variety uses such as area, sample, and personnel surveys and continued accident assessment. Instruments are stored throughout the plant and in the emergency facilities.

c. Process Monitors: The Control Room and applicable redundant backup locations are equipped with extensive plant process monitors for use in both normal and emergency conditions. These indications include but are not limited to reactor coolant system pressure and temperature, containment pressure and temperature, liquid levels, flow rates, status or lineup of equipment components. This instrumentation provides the basis for initiation of corrective actions.

1) Plant Monitoring/Information System: A plant monitoring/information system provides the data acquisition and database capability for performing plant monitoring and functions. The system is designed to scan, convert to engineering units, make reasonability and alarm limit checks, apply required transformations, store for recall and analysis, and display the reading of transformed data from plant instrumentation. The system scans flows, pressures, temperatures, fluid levels, radiation levels, equipment, and valve status at required frequencies. Scanned variables are quality tagged. The system provides for short and mid term storage of data for on-line retrieval and fast recall, and long term storage to appropriate media.

2) Safety Parameter Display System (SPDS): SPDS provides a display of plant parameters from which the safety status of operation may be assessed in the Control Room, and TSC for the site (the EOF can access similar data through the use of a alternate computer system). The primary function of the SPDS is to help operating personnel in the Control Room make quick assessments of plant safety status. SPDS and/or other display systems in the TSC and EOF promote the exchange of information between these facilities and the Control Room and assists the emergency organization in the decision making process.

d. Fire Detection System: The Fire Detection System is designed to quickly detect visible or invisible smoke (or other products of combustion) and/or heat in designated areas of the plant. The fire alarm communication systems and subsystems are located at strategic points throughout the plant to warn personnel of a nuclear incident or other emergency conditions. Existing plant alarm systems are sufficiently audible to alert personnel in the event of a fire or need for assembly. These alarm communication systems consist of warning sirens and lights (in high noise areas) and the PA system. Refer to the respective unit FSAR for further description of the unit's fire protection system.

6. Monitoring Equipment Offsite

The Licensee has made provisions to acquire data from and have access to the following offsite sources of monitoring and analysis equipment:

a. Geophysical Monitors: In the event that the onsite meteorological tower or monitoring instrumentation becomes inoperative and the contracted weather provider cannot be contacted, meteorological data may be obtained directly from the National Weather Service or the internet.

A considerable array of seismometers are located in the region. A central point of contact to obtain information about a seismic event is the National Earthquake Information Service in Golden, Colorado.

b. Radiological Environmental Monitors and Sampling: The Licensee has an extensive offsite environmental monitoring program to provide data on measurable levels of radiation and radioactive materials in the environs. The program (described fully in the Offsite Dose Calculation Manual), includes:

- Fixed continuous air samplers.
- Routine sampling, as applicable, of ground and surface water; milk and fish.
- A fixed TLD monitoring network.

The TLD program consists of the following elements:

- {A near-site ring of dosimeters covering the 16 meteorological sectors.}
- {TLDs placed at each of the normal fixed air sampler locations (typically about 8-15 air samplers).}

c. Laboratory Facilities: External facilities for counting and analyzing samples can be provided by the other Licensee sites or contracted laboratories. These laboratories can act as backup facilities in the event that the affected site's counting room and laboratory become unusable or the offsite radiological monitoring and environmental sampling operation exceeds the capacity of the site capabilities during an emergency. It is estimated that these laboratories will be able to respond within several hours from initial notification.

Outside analytical assistance may be requested from {state} and federal agencies, or through contracted vendors. The NRC mobile laboratory may be made available for Site Area and General Emergencies. The DOE, through the Interagency Radiological Assistance Program (IRAP) has access to any national laboratory (i.e., Brookhaven, Oak Ridge, Lawrence Livermore, etc.).

A general description of the laboratory capabilities is provided in Section C.3.

7. Offsite Monitoring Equipment Storage

{CCNPP Unit 3} maintains a sufficient supply of emergency equipment (such as portable survey, counting, and air sampling instrumentation and other radiological monitoring equipment and supplies) that may be used for environmental monitoring. These supplies meet the initial requirements for {two} Environmental Monitoring Teams. During subsequent phases of an emergency, additional equipment is available from other Licensee generating sites, vendors, industry, and offsite response organizations.

8. Meteorological Monitoring

The site has installed and maintains a meteorological tower equipped with instrumentation for continuous reading of the wind speed, wind direction, air temperature and delta air temperature. Additional capabilities are available to obtain representative current meteorological information from other sources, such as the National Weather Service. A full description of the onsite meteorological capabilities is given in Section H.5.a of this Plan.

9. Operations Support Center Capabilities

The OSC provides area for coordinating and planning of OSC activities and the staging of personnel. Further space is available in adjacent offices and locker rooms to accommodate additional personnel as may be required. Alternate locations are available. The onsite storeroom maintains a supply of parts and equipment for normal plant maintenance. These parts, supplies and equipment are available for damage control use as necessary.

Sufficient radiation protection equipment (i.e., protective clothing, respiratory protection gear, KI, and other health physics equipment and supplies) is stored and maintained near the OSC (as well as the other emergency response facilities). Repair team equipment is available near the OSC as well as in the maintenance shops. The OSC is stocked with an assortment of first aid and medical treatment equipment and supplies. The OSC maintains reliable voice communications with the CR, TSC, and EOF. For a complete description of communications equipment, refer to Section F. {When an emergency condition exists at one unit, additional supplies may be obtained from other unaffected units and any corporate resources upon request.}

10. Facility and Equipment Readiness

Emergency facilities and equipment are inspected and inventoried in accordance with emergency preparedness procedures. These procedures provide information on location and availability of emergency equipment and supplies. An inventory of all emergency equipment and supplies is performed on a {quarterly} basis and after each use in an emergency or drill. During this inventory, radiation monitoring equipment is checked to verify that required calibration period and location are in accordance with the inventory lists. Calibration of equipment shall be, at a minimum, at intervals recommended by the supplier of the equipment. Inspections include an operational check of instruments and equipment. Equipment, supplies, and parts which have a shelf-life are identified, checked, and replaced as necessary. Sufficient reserves of instruments and equipment are maintained to replace whose which are removed from emergency kits or lockers for calibration or repair. The Licensee is responsible for maintaining a supply of KI at the site.

11. General Use Emergency Equipment

Inventory procedures identify the equipment available within each emergency facility. Table H-1, Typical Emergency Equipment, lists typical portable emergency equipment available to the ERO. In addition, all normal resources available onsite will be used as necessary to support emergency response.

12. Collection Point for Field Samples

The onsite chemistry lab, has been designated as the central point for the receipt and analysis of radiological field monitoring samples. Sampling and analysis equipment is available for activity determination of these samples. Sufficient field monitoring equipment is maintained at the site for initial sampling. Instrumentation and equipment utilized for sample activity determination are routinely calibrated to ensure timely availability.

Table H-1
Typical Emergency Equipment

MS-2 / SPA-3 / Pig / Holder / Source(1)	Low Range (mrem/mSv) Dosimeters
RO-2 Survey Meters (1)	High Range (Rem/Sv) Dosimeters
RM-14 / HP210 Frisker (1)	Electronic Dosimeters
RM-14 / HP210 / SH4 Counter (1)	Dosimeter Chargers
Teletectors	3-Pocket Radiation Area Signs w/ Inserts
Instrument Check Sources	Box of Pens and Box of Grease Pencils
Air Sampler w/Sample Holder	Planchets
Extra Air Sampler Heads	Radioactive Material Tags
Charcoal Filters	Step off Pads – Check Shoes
Silver Zeolite Iodine Cartridges	Step off Pads – White
Particulate Filters	Dirty Shoe Cover Bags
Planchets	Gauze Wipes
Smear Paper	Smears
Package of 14 KI Tablets	Rad Rope
Extension Cords (25')	Extension Cords
Log Books	KI Tablets
Scientific Calculator	Magnetic Door Signs – No Entry
Gauze Wipes	Magnetic Door Signs – TSC/OSC Entrance
Anti "C" Clothing Kits	Cloth Coveralls
Writing and other Office Supplies	Paper Coveralls
Full Face Respirators w/Iodine Cartridge	Low Shoe Covers
Self Breathing Air Apparatus	High Shoe Covers
Portable Communication Equipment (Radios/Cell Phones)	Hoods
	Cotton Liners
	Rubber Gloves

Note 1: or equivalent instruments.

PART II: Planning Standards And Criteria

Section I: Accident Assessment

To effectively coordinate and direct all facets of the response to an emergency situation, diligent accident assessment efforts are required throughout the emergency. All four emergency classification levels have similar assessment methods, however, each level requires a greater magnitude of assessment effort dependent upon the plant symptoms and/or initiating event(s).

1. Plant Parameters and Corresponding Emergency Classification

Plant system and effluent parameter values are utilized in the determination of accident severity and subsequent emergency classification. Environmental and meteorological events are also determining factors in emergency classification. An emergency condition can be the result of just one parameter or condition change, or the combination of several. The specific symptoms, parameter values or events for each level of emergency classification are detailed in the emergency implementing procedures. Specific plant system and effluent parameters that characterize a classifiable event (EALs) are presented in the EAL Technical Bases document.

In order to adequately assess the emergency condition, each emergency facility has the necessary equipment and instrumentation installed to make available essential plant information on a continuous basis. Evaluation of plant conditions is accomplished through the monitoring of plant parameters both from indication in the Control Room and within the plant. Some of the more important plant parameters to be monitored in the Control Room are assembled into a single display location, which is entitled the "Safety Parameter Display System" (SPDS). The SPDS monitors such parameters as: reactor coolant system pressure, reactor or pressurizer water level, containment pressure and temperature, reactor power, safety system status, containment radiation level and effluent monitor readings. The instrumentation and equipment capabilities available for each emergency facility are described in Section H.

2. Onsite Accident Assessment Capabilities

The resources available to provide initial and continuing information for accident assessment throughout the course of an event include plant parameter display systems, liquid and gaseous sampling system, Area and Process Radiation Monitoring Systems, and Accident Radiation Monitoring Systems (which includes the high range containment radiation monitors). Descriptions of these systems are given in Section H.5.b.

3. Source Term Determination

Source term (or core damage) estimations serve several roles within the {CCNPP Unit 3} Emergency Preparedness Program. For planning purposes, core damage considerations are used as the bases for several of the Emergency Action Level (EAL) Initiating Conditions and as the threshold for the declaration of a General Emergency (the definition of a General Emergency specifies conditions which involve ‘substantial’ core degradation or melting as one of the bases for classification).

From an implementation perspective, core damage estimations provide a means of realistically differentiating between the four core states (no damage, clad failure, and fuel melt, and vessel melt-through) to:

- Evaluate the status of the fuel barriers and how their status relates to the risks and possible consequences of the accident.
- Provide input on core configuration (coolable or uncoolable) for prioritization of mitigating activities.
- Determine the potential quality (type) and/or quantity (%) of source term available for release in support of projected offsite doses and protective action recommendations.
- Provide information that quantifies the severity of an accident in terms that can be readily understood and visualized.
- Support the determination of radiological protective actions that should be considered for long term recovery activities.

The assessment methodologies utilized by {CCNPP Unit 3} are intended to provide a rapid best estimate of core damage which, when evaluated together, help to develop an overall picture of the extent of core damage. The methods used to estimate the amount or type of core damage occurring under accident conditions include the following:

- Containment Radiation Monitors: An indirect method used to determine the amount of core damage. Applicable to Loss of Coolant Accident (LOCA) scenarios. Based upon an end-of-life source term and static nuclide ratio assumptions yielding a limited accuracy. Valid any time following an accident.
- Core Temperatures: Methods such as Core Exit Thermocouple (CET), Peak Core Temperatures and Hot Leg Temperatures provide indirect methods used to indicate the type and/or amount of core damage. Applicable for all types of accidents. Valid any time following an accident.
- Core Uncovery: Methods such as Core Uncovery Time, Reactor Vessel Level Indication System Level and Source Range Monitor count rate provide indirect methods used to indicate the type of core damage (clad failure or fuel melt). Applicable for all types of accidents. Provides a relatively accurate estimate of the state of the core early in the event. Valid any time following an accident.
- Containment Hydrogen Concentration: An indirect method used to establish the type of core damage. Applicable to LOCA type accidents where all the hydrogen generated by the metal-water reaction is released into containment. Valid any time following an accident.
- Sample Analysis - Isotopic Ratio Comparison: A direct method used to establish the type of core damage. Compares expected isotopic ratios with a sample to determine a general core state. Applicable under all types of accidents. Valid any time following an accident.

- Sample Analysis - Presence of Abnormal Isotopes: A direct method used to provide a go/no go indication of fuel melt by the presence of unusually high concentrations of the less volatile fission products. Applicable under all types of accidents. Valid any time following an accident.
- Sample Analysis - Concentration Evaluation: A direct method that yields the most accurate numerical estimations of the amount of core damage. Applicable for all types of accidents. Requires the sampled system(s) be in a steady state that usually prevents its use until the plant is in a stable condition.

4. Effluent Monitor Data and Dose Projection

Dose assessment or projection represents the calculation of an accumulated dose at some time in the future if current or projected conditions continue. During an accident, the Unit's Parameter Display System and personal computers will provide the ERO with the timely information required to make decisions. Radiological and meteorological instrumentation readings are used to project dose rates at predetermined distances from the site, and to determine the integrated dose received. A computerized dose assessment program with similar capabilities and outputs as the NRCs Radiological Assessment System for Consequence Analysis (RASCAL) program will be used. Dose assessment methods used by the ERO to project offsite doses include:

A. Monitored Release Points - This method utilizes the plant's effluent radiation monitors and system flow rates. Effluent release points are used to directly calculate a release rate. The point of the release determines the way the source term is affected and is adjusted by the dose assessment process.

B. Containment Leakage/Failure - This method uses a variety of containment failures or leak rates in conjunction with available source term estimations to develop a release rate to the environment. A direct vent of containment can be modeled as a failure to isolate.

C. Release Point Samples - This method uses a sample at the release point and an estimated flow rate to develop a release rate at the point of release.

D. Monitoring Team Data - This method uses a field survey or sample and the atmospheric model to back calculate a release rate and ratio concentrations of radioactive material at various points up and downwind of plume centerline.

The computer applications used to provide dose calculations are evaluated against the EPA-400 plume exposure Protective Action Guides (PAGs) applicable for the early phase of an accident. These evaluations place an emphasis on determining the necessity for offsite protective action recommendations. Dose assessment actions will be performed in the following sequence:

First: Onset of a release to 1 hour post-accident: Shift personnel will rely on a simplified computerized dose model to assist them in developing offsite dose projections using real time data from effluent monitors and site meteorology.

Second: 1 hour post-accident to event termination: Estimates of off-site doses based on more sophisticated techniques are provided. Dedicated ERO personnel will analyze the offsite consequences of a release using more complex computerized dose modeling. These additional methods are able to analyze more offsite conditions than the simplified quick method, as well account for more specific source term considerations.

5. Meteorological Information

Local meteorological data is available from an onsite meteorological tower. The data available includes wind speed, wind direction, temperature, and delta temperature. These data are used by the site ERO and are provided to the {state}, and NRC to enable near real-time predictions of the atmospheric effluent transport and diffusion. Meteorological data from the tower is available in the CR, TSC, and EOF. A full description of the onsite meteorological capabilities is given in Section H.5.a.

6. Unmonitored Release

Dose projections can be made during a release through use of actual sample data in situations where effluent monitors are either off-scale or inoperative or the release occurs by an unmonitored flow path. In the absence of effluent sample data, a dose projection can be performed by specifying the isotopic mix as a default. The selection of a default accident category defines the mix, the total curies, and the release pathway(s). The total number of curies from a default mix for each isotope is used to provide an upper bound for release concentration, and hence, an upper bound for the dose rate and dose to the public.

7. Onsite and Offsite Monitoring

In addition to the capabilities and resources described in Section H.6.b and H.7, the Licensee maintains the ability to take offsite air samples and to directly measure gamma dose rates the event of an airborne or liquid release. The capability to take offsite soil, water, and vegetation samples is also provided by either the Monitoring Teams or a contracted vendor.

The environmental monitoring equipment, as described in Section H, contain portable survey, counting, and air sampling instrumentation and other radiological monitoring equipment and supplies to be used by the Monitoring Teams. Samples are taken at predetermined locations as well as those specified both during and after a release. Environmental measurements are used as an aid in the determination and assessment of protective and recovery actions for the general public.

8. Monitoring Teams

Monitoring Teams are dispatched by the Licensee to perform a variety of functions during conditions that may involve significant releases of radioactive materials from the plant. Radiological survey and sample data is used to define affected area boundaries, verify or modify dose projections and protective action recommendations, and assess the actual magnitude, extent, and significance of a liquid or gaseous release.

In addition to contamination and dose rate measurements, the change out of TLDs and air sampler cartridges can be performed. Other actions may include soil, water and vegetation sampling.

The initial environmental surveys involve simple-to-perform measurements to quickly confirm or modify the dose projections based on plant parameters. Subsequent environmental monitoring efforts will be aimed at further defining the offsite consequences including instituting an expanded program to enable prompt assessments of any subsequent releases from the plant.

The expertise necessary to conduct limited offsite environmental survey and sampling exists onsite 24 hours a day. A minimum of two offsite Monitoring Teams are notified and activated at an Alert or higher classification. Teams composed of two individuals are assembled to test and inventory dedicated survey and sampling equipment and are then dispatched in company or personal vehicles into the surrounding area when a release is or is expected to occur. {This capability exists upon EOF activation.} Radiological survey and sample data is transmitted to the emergency facilities. Vendor/contractor support can be used to perform collection, shipment and analysis of environmental sample media as described in Section B.8.c.

9. Iodine Monitoring

Monitoring equipment has the capability to detect and measure airborne radioiodine concentrations as low as 1×10^{-7} $\mu Ci/cm^3$ in the field. Interference from the presence of noble gas and background radiation will be minimized by ensuring that monitoring teams move to areas of low background prior to analyzing the sample cartridge. The collected air sample is measured by hand held survey meter as an initial check of the projection derived from plant data to determine if significant quantities of elemental iodine have actually been released.

10. Dose Estimates

Specific procedures exist for the correlation of air activity levels to dose rate for key isotopes. Provisions have been established for estimating integrated dose from the projected and actual dose rates and for the comparison of these estimates with the protective action guides.

11. {State} Monitoring Capabilities

The {states} have the ability to dispatch their own field monitoring teams to track the airborne radioactive plume. The states also have the ability and resources to coordinate with federal and licensee monitoring teams to compare sample results.

Section J: Protective Response

Protective response consists of emergency actions, taken during or after an emergency situation, which are intended to minimize or eliminate hazards to the health and safety of the public and/or site personnel. A range of protective actions has been developed for emergency workers and the general public in the Plume Exposure Pathway EPZ. Additionally, guidelines have been established to aid in choosing protective actions during an emergency that are consistent with federal guidance. The Licensee is responsible for onsite actions, while the responsibility for offsite actions rests with the {state}, county, and other offsite response agencies.

1. Notification of Onsite Personnel

For all emergency classifications, all personnel within the Protected Area are notified within 15 minutes of the initial classification or escalation of an emergency by recognizable alarms, and/or verbal announcements over the plant Public Address (PA) System. Announcements include the emergency classification and response actions to be taken by personnel onsite (such as ERO, non-ERO, contractor personnel, and visitors). Provisions are made to alert personnel in high noise areas and outbuildings within the Protected Area as applicable.

The plant has identified locations where people might be expected to be present outside the Protected Area but within the Owner Controlled Area. Accountability of persons within the Owner Controlled Area but outside the Protected Area is not required. However, provisions are established for notification of personnel within the Owner Controlled Area any time a Site Evacuation has been initiated, or as otherwise deemed appropriate.

2. Evacuation Locations

If a Site Evacuation is required, non-essential personnel are directed to either assemble within designated Assembly Areas or to immediately evacuate the site. Personnel will be directed to either proceed to their homes or to reassemble at designated offsite locations. Visitors to the site will assemble with and follow the instructions of their escorts. Non-essential personnel within the Protected Area will normally exit through {security access portal}. Personal transportation (if available) will normally be used and established evacuation routes will be followed. Personnel without transportation will be identified and provided transportation as necessary.

3. Radiological Monitoring of Evacuees

Personnel evacuating the {CCNPP Unit 3} site will be monitored for contamination by the portal monitors as they exit the Protected Area(s), with portable friskers in Assembly Areas, or sent to offsite monitoring locations on an as needed basis. If there is no release of radioactive materials within {CCNPP Unit 3}, limited monitoring (less than 100% of evacuees) may be utilized to speed the evacuation process.

4. Evacuation

Evacuation is the primary protective action anticipated for onsite personnel not having immediate emergency response assignments. The site has identified locations that serve as Assembly Areas and offsite locations for non-essential personnel when they are not instructed to proceed home. The specific locations of these areas are provide locations or located in the {CCNPP Unit 3 Annex}. Implementing procedures describe equipment, supplies and general operation of these facilities. The {Emergency Plant Manager} and/or {Shift Supervisor} will designate personnel within the Site Boundary as essential or nonessential. Evacuation of non-essential personnel is usually conducted immediately after accountability if a Site Area Emergency or General Emergency has been declared and conditions permit. Evacuation shall commence in accordance with site procedures as directed by the {Emergency Plant Manager} or his/her designee, unless one of the following conditions exist:

a. Severe weather conditions threaten safe transport.

b. A significant radiological hazard would be encountered.

c. There is a security threat occurring, which would have an adverse impact on the personnel while leaving the site.

d. A condition similar to the above in magnitude, which in the opinion of the {Emergency Plant Manager} would adversely affect the site personnel.

Security forces will be dispatched, when available, to access road(s) to control entry to site facilities. Unauthorized and non-ERO personnel will be denied entry.

The initiation of a site evacuation will be reported to the appropriate {state}/local agency.

5. Accountability

The purpose of Accountability is to determine the locations of all personnel inside the Protected Area and to muster emergency personnel at prearranged locations. When Accountability of unit personnel is determined to be necessary by the {Shift Supervisor} or the {Emergency Plant Manager}, all personnel within the affected unit protected area shall be accounted for and the names of missing individuals (if any) are determined within thirty (30) minutes of the {emergency announcement}. Should missing personnel be identified, search and rescue operations are initiated.

Accountability is usually performed in conjunction with Assembly, and is required to be initiated whenever a Site Area Emergency or higher classification is declared. The movement of personnel for the purposes of Accountability may be delayed if their health and safety could be in jeopardy, such as severe weather or for security concerns.

If it is determined that the prearranged Assembly Area is unfit for personnel, the {Shift Supervisor} or the {Emergency Plant Manager} may designate an alternative Assembly Area and direct personnel using appropriate communication systems that are available.

Once established, Accountability within the Protected Area is maintained throughout the course of the event, unless specifically terminated by the {Emergency Plant Manager}.

6. Provisions for Onsite Personnel

The Licensee maintains an inventory of respiratory protection equipment, anti-contamination clothing, and KI that is made available to emergency workers remaining onsite should conditions warrant. During the course of an emergency, protective actions are considered to minimize radiological exposures or contamination problems associated with all onsite personnel. For those who must work within the affected areas of the site, measures that are considered are:

a. Use of Respirators: On-shift and emergency response personnel use respiratory protection in any environment involving exposure to high level gaseous activity or oxygen deficient atmosphere, or where air quality is in doubt. In the presence of airborne particulates, emergency response personnel may be directed by health physics personnel to use full-face filter type respirators. The criteria for issuance of respiratory protection are described in Radiation Protection procedures.

b. Use of Protective Clothing: Anti-contamination clothing, located in the TSC, OSC and site dress out areas is available for use by onsite personnel. The criteria for issuance of protective clothing are described in Radiation Protection procedures.

c. Use of Potassium Iodide (KI): The use of KI may be recommended when a projected dose of 50 Rem (0.5 Sv) Committed Dose Equivalent (CDE) is exceeded for an emergency worker's thyroid. This is the value specified in EPA 400-R-92-001, “Manual of Protective Action Guides and Protective Actions for Nuclear Incidents”. The station(s) are responsible for maintaining a supply of KI at their respective site. The {Emergency Plant Manager} or {Emergency Director} has the responsibility for approval of issuing KI to Licensee emergency workers.

7. Mechanism for Implementing Protective Action Recommendations

Plant conditions, projected dose and dose rates, and/or field monitoring data are evaluated to develop PARs for the purpose of preventing or minimizing exposure to the general public. PARs are provided to the offsite agencies responsible for implementing protective actions for the general public within the 10-mile (16-kilometer) EPZ. PARs are approved by the individual in Command and Control ({Shift Supervisor}, {Emergency Plant Manager} or {Emergency Director}).

In an emergency that requires immediate protective actions be taken prior to activation of the offsite emergency facilities, PARs are provided directly to the {state} and local 24 hour warning points by the {Shift Supervisor}.

8. Evacuation Time Estimates (ETEs)

An independent ETE report has been performed to provide estimates of the time required to evacuate resident and transient populations surrounding the site for various times of the year under favorable and adverse conditions. ETEs for evacuation of the plume exposure EPZ are in Appendix 5 and detailed in the referenced ETE report.

9. Capability of Implementing Protective Action Recommendations

The responsibility for implementing protective measures based on protective action guides for the offsite population at risk is the responsibility of the {state} and local governments. Detailed procedures for public protective actions are contained in the {state} and other local radiological emergency response plans as appropriate.

{The state agencies are responsible for evaluation of the Licensee developed protective actions recommendations and preparing an independent recommendation to the Governor, or his/her appointed agent. Only when the state acts under the Governor's order does a protective action recommendation become a directed protective action.}

If the plant conditions are stable and offsite radiological conditions are such that the public health and safety are not endangered, then return to evacuated areas may be discussed with the affected {state(s)}. {State} authorities are responsible for actually recommending return and transmitting this recommendation to {offsite authorities}.

10. Implementation of Protective Action Recommendations

The licensee, {state}, and local emergency plans used to implement the protective measures for the plume exposure pathway take numerous factors into consideration. Among these considerations are:

a. Most of the public evacuees are expected to travel in their own vehicles, leaving the EPZ via designated evacuation routes. The {state} and county plans contain official maps and information on the locations of off-site centers.

b. The population distribution around the site. Population distribution for the plume exposure EPZ is contained in Appendix 5 of this plan.

c. As indicated in Section E, offsite agencies are notified when an event is declared. {State} and local agencies have the capability to notify all members of the transient and resident population within the Plume Exposure Pathway EPZ.

d-l. Items addressed separately in {state} and local emergency plans.

m. At a General Emergency classification, the Licensee will provide the {state} with recommendations for protective actions for the public. For incidents involving actual, potential, or imminent releases of radioactive material to the atmosphere, EPA 400-R-92-001, the NRC Response Technical Manual (RTM-96) and NUREG-0654, Supp. 3 are used as the basis for the general public PARs.

1) Plant Based PARs

Figure J-1 has been developed to aid Licensee personnel providing PARs based on the above. Possible plant based PARs issued at a General Emergency include:

- {Shelter of the general public within a two mile (3.2 kilometer) radius and five miles (eight kilometers) downwind (puff release above PAGs)}
- {Evacuation of the general public within a two mile (3.2 kilometer) radius and five miles (eight kilometers) downwind.}
- {Evacuation of the general public within a five mile (eight kilometers) radius and ten miles (16 kilometers) downwind.}

In addition to the above actions to minimize or prevent potential exposure to radiation, a recommendation of heightened awareness will be issued for the remainder of the EPZ consistent with the specific terminology in use by the applicable offsite organizations. For example, some entities use the term shelter to achieve heightened awareness, while others reserve shelter exclusively for dose reduction measures.

2) Dose Based PARs

{Evacuation is recommended if projected doses reach the minimum EPA PAGs (1 Rem (0.01 Sv) EPA TEDE[1] or 5 Rem (0.05 Sv) CDE Thyroid).}

{Shelter is recommended if projected doses reach the minimum EPA PAGs (1 Rem (0.01 Sv) EPA TEDE or 5 Rem (0.05 Sv) CDE Thyroid) AND a puff release is in progress.}

Many assumptions exist in dose assessment calculations, involving both source term and meteorological factors, which make computer predictions over long distances highly questionable. However, in the event dose assessment results indicate the need to recommend actions beyond the outer EPZ boundaries, that is past 10 miles (16 kilometers), Monitoring Teams are dispatched to downwind areas to verify the calculated exposure rates prior to issuing PARs outside the EPZ.

[1] EPA TEDE is defined as the sum of the doses from external exposure and inhalation from the plume, and from 4 days of external exposure to deposited materials.

Site personnel normally do not have the necessary information to determine whether off site conditions would require sheltering instead of evacuation. An effort to base PARs on external factors (such as road conditions, traffic/traffic control, weather, or offsite emergency response capabilities) is usually performed by the {state}.

11. Ingestion Pathway Protective Measures

The responsibility for specifying protective measures to be used for the ingestion pathway rests with the {state}. These measures have been developed by the {state} and include the methods for protecting the public from consumption of contaminated water and foodstuffs.

12. Monitoring of Evacuees

The {state} and local organizations have the capability to register and monitor evacuees at designated reception centers. This capability includes personnel and equipment capable of monitoring residents and transients evacuating from the plume exposure EPZ and arriving at the reception centers, in accordance with FEMA guidelines.

{Figure J-1: Generic PAR Flowchart }

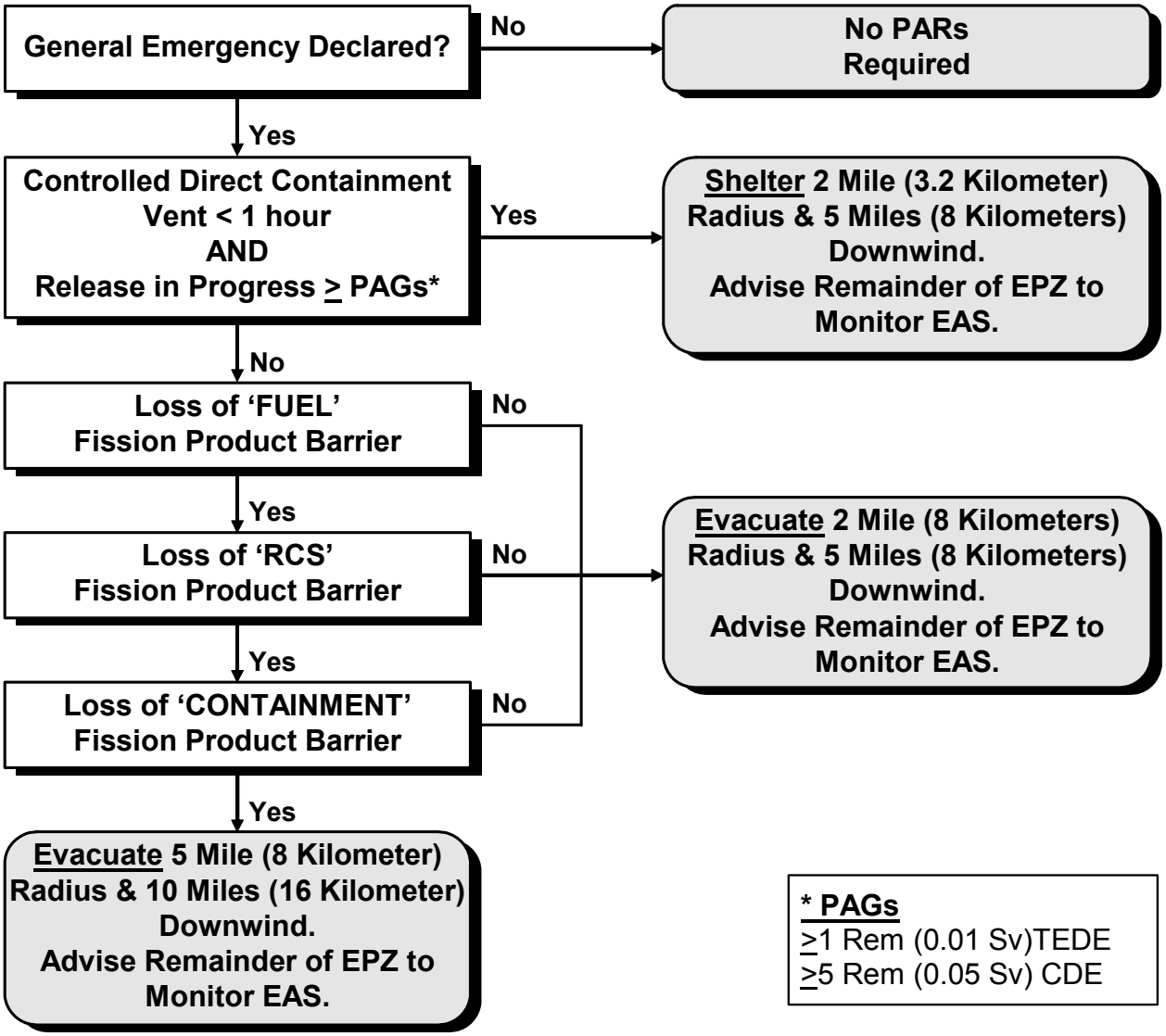

Note: LOSS of a fission product barrier as defined in the Emergency Action Level (EAL) Matrix.

Section K: Radiological Exposure Control

This section of the plan describes the means for controlling emergency worker radiological exposures during an emergency, as well as the measures and exposure guidelines that are used by the Licensee for removal of injured persons; undertaking corrective actions; performing assessment actions; providing first aid; performing personnel decontamination; providing ambulance service; and providing medical treatment services to persons exposed to radiation and/or radioactive materials.

Exposure guidelines in this section are consistent with EPA Emergency Worker and Lifesaving Activity Protective Action Guides described in EPA 400-R-92-001.

1. Emergency Exposure Guidelines

Being licensed by the NRC, all nuclear power plants maintain personnel exposure control programs in accordance with 10 CFR 20 under normal operating conditions. The {Emergency Plant Manager} is assigned the non-delegable responsibility for authorizing personnel exposure levels under emergency conditions per EPA-400. In emergency situations, workers may receive exposure under a variety of circumstances in order to assure safety and protection of others and of valuable property. These exposures will be justified if the maximum risks or costs to others that are avoided by their actions outweigh the risks to which the workers are subjected. The Emergency Worker Dose Limits are as follows:

Dose Limit (Rem TEDE) (Sv TEDE)	Activity	Condition
0-5 (0-0.05)	All	Personnel should be kept within normal 10 CFR 20 limits during bona fide emergencies, except as authorized for activities as indicated below.
5-10 (0.05-0.1)	Protecting valuable property	Lower dose not practicable.
10-25 (0.1-0.25)	Lifesaving or protection of large populations	Lower dose not practicable.
> 25 (> 0.25)	Lifesaving or protection of large populations	Only on a voluntary basis to persons fully aware of the risks involved.

Limit dose to the lens of the eye to 3 times the above values and doses to any other organ (including skin and body extremities) to 10 times the above values.

Whenever possible, the concurrence of the {Radiation Protection Manager} should be secured before exposing individuals to dose equivalents beyond the EPA-400 lower limit.

2. Emergency Radiation Protection Program

The {Radiation Protection Manager} is the individual responsible for the implementation of the radiation protection actions during an emergency. Radiation protection guidelines include the following:

- Volunteers over forty-five years of age are considered first for any emergency response action requiring exposure greater than normal limits. Routine dose limits shall not be extended to emergency dose limits for declared pregnant individuals. As in the case of normal occupational exposure, doses received under emergency conditions should be maintained as low as reasonably achievable.

- Persons undertaking any emergency operation in which the dose will exceed 25 Rem (0.25 Sv) TEDE should do so only on a voluntary basis and with full awareness of the risks involved including the numerical levels of dose at which acute effects of radiation will be incurred and numerical estimates of the risk of delayed effects.

- In the context of the emergency limits, exposure of workers that is incurred for the protection of large populations may be considered justified for situations in which the collective dose avoided by the emergency operation is significantly larger than that incurred by the workers involved.

- Exposure accountability is maintained and proper personnel radiological monitoring equipment is provided for all personnel during emergency conditions.

- Access to high radiation areas is only permitted with prior approval of the applicable {Radiation Protection Manager}. Personnel are not allowed to enter known or potential high radiation areas unless their exposure has been properly evaluated.

- Periodic habitability surveys of emergency facilities are performed during an emergency. If the facility is determined to be uninhabitable, the facility is evacuated in order to prevent or minimize exposure to radiation and radioactive materials. Alternate assembly areas are established, as necessary, to relocate and monitor evacuated personnel.

3. Personnel Monitoring

a. Emergency workers will receive TLD badges and personal self-reading dosimeters capable of measuring expected exposures on a real time basis. The capability exists for the emergency processing of TLDs on a 24-hour per day basis, if necessary.

b. Emergency worker dose records are maintained by the TSC and EOF Radiation Protection Groups (as appropriate) in accordance with the emergency and radiological protection procedures. Emergency workers are instructed to read their dosimeters frequently. TLDs may be processed with increased periodicity.

4. Non-Licensee Personnel Exposure Authorization

The responsibility for authorizing non-Licensee emergency workers (i.e., Federal, {state} and local agency emergency workers) to receive exposures in excess of the EPA General Public Protective Action Guides rests with the Federal, {state} and Local organizations, except when such emergency workers are onsite. Authorization of exposures in excess of EPA General Public Protective Action Guides, in this latter instance, rests with the {Emergency Plant Manager}.

5. Contamination and Decontamination

During an emergency, the {Emergency Plant Manager} is responsible for preventing or minimizing personnel exposure to radioactive materials deposited on the ground or other surfaces. Special consideration should be given to setting up contamination control arrangements for personnel entering the OSC after completion of assigned activities.

a. Contamination Limits: During emergency conditions, normal plant contamination control criteria will be adhered to as much as possible. However, these limits may be modified by the applicable {Radiation Protection Manager} should conditions warrant.

b. Contamination Control Means: Personnel found to be contaminated will normally be attended to at decontamination areas located onsite. Temporary decontamination areas can also be set up inside at various locations. Decontamination showers and supplies are provided onsite with additional personnel decontamination equipment and capabilities. Shower and sink drains in the controlled area are routed to the miscellaneous waste processing system where the liquid is processed and monitored prior to discharge. Potentially contaminated emergency vehicles will be surveyed before they released from the plant or offsite assembly area for non-emergency use. If the survey area is not suitable for monitoring and decontamination due to radiological or other concerns, vehicles will be surveyed at an alternate location.

6. Contamination Control Measures

Controls are established 24 hours per day to contain the spread of loose surface radioactive contamination.

a. Contaminated areas are isolated as restricted areas with appropriate radiological protection and access control. Personnel leaving contaminated areas are monitored to ensure they and their clothing are not contaminated. If contamination above acceptable levels is found, they will be decontaminated in accordance with plant procedures. If normal decontamination procedures do not reduce personnel contamination to acceptable levels, the case will be referred to a competent medical authority. Supplies, instruments, and equipment that are in contaminated areas or have been brought into contaminated areas will be monitored prior to removal. If found to be contaminated, they will be decontaminated using normal plant decontamination techniques and facilities or may be disposed of as radwaste. Contaminated vehicles will be decontaminated before being released.

b. Measures will be taken to control onsite access to potentially contaminated potable water and food supplies. Under emergency conditions when uncontrolled releases of activity have occurred, eating, drinking, smoking, and chewing are prohibited in all site emergency response facilities until such time as habitability surveys indicate that such activities are permissible.

c. Restricted areas and contaminated items will be returned to normal use when contamination levels have been returned to acceptable levels. Contamination control criteria for returning areas and items to normal use are contained in the plant procedures.

7. Decontamination of Relocated Personnel

Nonessential onsite personnel may be evacuated to an offsite relocation center or assembly area, as discussed in Section J. Radiological controls personnel at that location monitor evacuees and determine the need for decontamination. Existing and temporary facilities to limit contamination and exposure will be utilized and established at the site as necessary during an emergency situation. In the event that decontamination of evacuees locally is not possible, personnel will be sent to designated locations for monitoring and decontamination. Provisions for extra clothing are made and suitable decontaminates are available for the expected type of contaminations, particularly with regards to skin contaminations, including radioiodine contamination of the skin.

Section L: Medical and Public Health Support

This section describes the arrangements for medical services for contaminated injured individuals sent from the site.

1. Offsite Hospital and Medical Services

The Licensee assist local hospitals to ensure support hospital personnel have been trained using the standards of FEMA Guidance Memorandum MS-1, "Medical Services". The hospitals are equipped to handle contaminated or radiation injured individuals. Specifically, training of medical support personnel at the hospitals will include basic training on the nature of radiological emergencies, diagnosis and treatment, and follow-up medical care. Site personnel are available to assist medical personnel with decontamination radiation exposure and contamination control. Arrangements, by letter of agreement or contract, are maintained by the Licensee with a qualified hospital located in the vicinity of the site for receiving and treating contaminated or exposed persons with injuries requiring immediate hospital care. The Licensee shall arrange for medical consultants to aid in any special care necessary at these facilities.

These agreements are verified {annually}. Refer to section P.4 for details.

2. Onsite First Aid Capability

The site maintains onsite first aid supplies and equipment necessary for the treatment of contaminated or injured persons. In general, physicians or nurses are not staffed at the site, and as such, medical treatment given to injured persons is of a "first aid" nature. Additionally, the Radiation Protection Technicians at the site are experienced in control of radioactive contamination and decontamination work. Site personnel are also trained and qualified to administer first aid. {At least two of these individuals} are available on shift at all times. The functions of site personnel in handling onsite injured people are:

1) Afford rescue;

2) Administer first aid including such resuscitative measures as are deemed necessary;

3) Begin decontamination procedures; and

4) Arrange for suitable transportation to a hospital when required.

Primary attention shall be directed to the actual factors involved in the treatment of casualties, such as: control of bleeding, resuscitation including heart and lung, control of bleeding after resuscitation, protection of wounds from bacterial or radioactive contamination and the immobilization of fractures.

Site personnel provide an initial estimate of the magnitude of surface contamination of the injured and preliminary estimates of total body dose to the injured. Primary rapid and simple decontamination of the surface of the body (when possible and advisable) before transportation to a designated hospital may be carry out as directed or performed by Radiation Protection personnel. When more professional care is needed, injured persons are transported to a local clinic or hospital. Contaminated and injured persons are transported to a dedicated facility specified for the Site.

3. Medical Service Facilities

Because of the specialized nature of the diagnosis and treatment of radiation injuries, the Licensee maintains an agreement with local hospitals and physicians trained in radiological emergency response. A team of physicians, nurses, health physicists and necessary support personnel on 24-hour call to provide consultative or direct medical or radiological assistance at the {Calvert Memorial Hospital (CMH)} or at the accident site. Specifically, the team has expertise in and is equipped to conduct: medical and radiological triage; decontamination procedures and therapies for external contamination and internally deposited radionuclides, including chelation therapy; diagnostic and prognostic assessments or radiation-induced injuries; and radiation dose estimates by methods that include cytogenetic analysis, bioassay, and in vivo counting.

4. Medical Transportation

Arrangements are made by the site for prompt ambulance transport of persons with injuries involving radioactivity to designated hospitals. Such service is available on a 24-hour per day basis and is confirmed by letter of agreement. Radiation monitoring services shall be provided by the Licensee whenever it becomes necessary to use the ambulance service for the transportation of contaminated persons.

A qualified Radiation Protection person shall accompany the ambulance to the hospital. Additional Radiation Protection personnel may be contacted and dispatched to local hospitals to assist in the monitoring and decontamination of the injured victim and hospital and ambulance facilities and personnel.

Section M: Reentry and Recovery Planning

This section describes the measures to be taken for reentry into the areas of the nuclear power plant which have been evacuated as a result of an accident. It also outlines the Licensee Recovery Organization and its concepts of operation.

1. Reentry and Recovery

a. Evaluating Reentry Conditions

During an emergency, immediate actions are directed toward limiting the consequences of the accident to afford maximum protection to site personnel and the general public. Once corrective measures have been taken and effective control of the plant has been re-established, a more methodical approach to reentry is taken. This E-Plan divides reentry into two separate categories:

- Reentry during the emergency phase of an accident is performed to save a life, control a release of radioactive material, prevent further damage to plant equipment or restore plant equipment. If necessary, this category of reentry may be performed using emergency exposure limits. Briefings, rather than written radiation protection procedures, may be used when making these entries.

  All reentry activities conducted during the emergency are authorized by the {Emergency Plant Manager} and coordinated by the {OSC Director} and the {Radiation Protection Manager}.

- Reentry during the recovery phase of an accident is performed using normal exposure limits. Either normal procedures or procedures that consider existing as well as potential conditions inside affected areas are developed specifically for each reentry.

  Reentry activities during the recovery phase are authorized by the Recovery Manager and coordinated by the recovery organization managers in charge of personnel making the reentry.

The following items are considered when planning for any reentry:

- Review of available radiation surveillance data to determine plant areas potentially affected by radiation and/or contamination.

- Review of radiation exposure history of personnel required to participate in the accident mitigation or recovery operations.

- Determination of the need for additional personnel and the sources of these additional personnel.

- Review of adequacy of radiation survey instrumentation and equipment (types, ranges number, calibration, etc.).

- Review of non-radiological hazards and required protective measures (e.g., fire, electrical, Hazmat).
- Pre-planning of activities and briefings for the reentry team that include the following:
  - Personnel knowledge requirements.
  - Methods and procedures that will be employed during the entry.
  - Specific tasks to be performed.
  - Anticipated radiation and contamination levels.
  - Radiation survey equipment and types and ranges of dosimetry required.
  - Shielding requirements and availability.
  - Appropriate communications.
  - Protective clothing and equipment requirements.
  - Access control procedures.
  - Decontamination requirements.
  - De-briefing requirements.
  - Respiratory protection.
- A review of security controls to prevent unauthorized or unintentional entry into hazardous areas.

b. Evaluating Entry into Recovery

The Recovery Phase is that period when major repairs are being performed to return the plant to an acceptable condition and the possibility of the emergency condition degrading no longer exists. Once the plant has been stabilized, contained and controlled, the Recovery Phase may be entered. It is the responsibility of the {Emergency Director} to declare emergency phase terminated and entry into Recovery after obtaining concurrence from the {Emergency Plant Manager} and consulting with offsite authorities.

Establishment of Recovery can be conducted from any emergency classification level. However, it is possible that the lower classifications of Unusual Event and Alert will conclude with the overall event being terminated. There may be cases where certain EAL initiating conditions remain exceeded, but the plant is under control and no further danger of degradation exists. In such a case, it may be appropriate to enter Recovery. Site Area and General Emergencies will require a Recovery Phase to be established prior to event termination. The Licensee may consult with/notify cognizant governmental agencies prior to entering Recovery or event termination.

Termination/Recovery considerations are contained in the implementing procedures to provide guidance for evaluating the risk of entering Recovery without alleviating the intent of the initiating condition. The purpose of Recovery is to provide the necessary personnel to handle the long-term activities and to return the plant to an acceptable condition.

The following conditions are guidelines for the determination of establishing Recovery (this is not intended to be a complete list and additional criteria may apply, depending on the specifics of the event):

- The risk to the health and safety of the public has been mitigated.
- Plant parameters and equipment status have been established and controlled.
- In-plant radiation levels are stable or decreasing, and acceptable, given the plant conditions.
- The potential for uncontrolled releases of radioactive material to the environment has been eliminated.
- Environmental monitoring has been established.
- The radioactive plume has dissipated and plume tracking is no longer required (the only environmental assessment activities in progress are those necessary to assess the extent of deposition resulting from passage of the plume).
- Licensee workers have been protected.
- Any security threat has been neutralized, and/or plant security is under the direction of Licensee personnel.
- Adequate plant safety systems are operable.
- The reactor is in a stable shutdown condition and long-term core cooling is available.

- The fuel pool damage has been mitigated, or spent fuel damage has been contained and controlled.
- Primary containment integrity has been established.
- Plant systems and equipment are restored and/or replaced such that plant conditions are stable highly unlikely to degrade further.
- Conditions that initiated the emergency have been contained, controlled, eliminated or stabilized such that the classification is no longer applicable.
- The operability and integrity of radioactive waste systems, decontamination facilities, power supplies, electrical equipment and of plant instrumentation including radiation monitoring equipment have been established.
- Any fire, flood, earthquake or similar emergency condition or threat to security no longer exists.
- All required notifications have been made.
- Discussions have been held with federal, {state} and local agencies and agreement has been reached to terminate the emergency.
- At an Alert or higher classification, the ERO is in place and emergency facilities are activated.
- Any contaminated injured person has been treated and/or transported to a medical care facility.
- Offsite conditions do not unreasonably limit access of outside support to the site and qualified personnel and support services are available.

It is not necessary that all conditions listed above be met; however, all items must be considered prior to entering the recovery phase. For example, it is possible after a severe accident that some conditions remain that exceed an Emergency Action Level, but entry into the Recovery Phase is appropriate.

2. Recovery Organization

Once plant conditions have been stabilized and the Recovery Phase has been initiated, the {Emergency Director} may form a Recovery Organization for long-term operations. These types of alterations should be discussed with the NRC prior to implementation.

- For events of a minor nature (i.e., for Unusual Event classifications), the normal on shift organization is normally adequate to perform necessary recovery actions.

- For events where damage to the plant has occurred, but no significant offsite impact resulted (i.e., for Alert classifications), the ERO, or portions thereof, and normal site organizations (e.g. outage planning, maintenance, etc.) should be adequate to perform the recovery tasks prior to returning to the normal site organization.

- For events involving major damage to systems required to maintain safe shutdown of the plant and offsite radioactive releases have occurred (i.e., for Site Area Emergency or General Emergency classifications), the site recovery organization is put in place.

The specific members of the site recovery organization are selected based on the sequence of events that preceded the recovery activities as well as the requirements of the recovery phase. The basic framework of the site recovery organization is as follows:

a. The {Recovery Manager}: The {Emergency Director} is initially designated as the {Recovery Manager}. The {Recovery Manager} is charged with the responsibility for directing the activities of the site recovery organization. These responsibilities include:

    - Ensuring that sufficient personnel, equipment, or other resources from the Licensee and other organizations are available to support recovery.

    - Directing the development of a recovery plan and procedures.

    - Deactivating any of the plant ERO which was retained to aid in recovery, in the appropriate manner. Depending upon the type of accident and the onsite and offsite affects of the accident, portions of the ERO may remain in place after initiation of the recovery phase.

    - Coordinating the integration of available federal and {state} assistance into onsite recovery activities.

    - Coordinating the integration of Licensee support with federal, {state} and local authorities into required offsite recovery activities.

    - Approving information released by the public information organization which pertains to the emergency or the recovery phase of the accident.

    - Determining when the recovery phase is terminated.

b. The {Recovery Plant Manager}: The {Plant Manager} or a designated alternate will become the {Recovery Plant Manager}. The {Recovery Plant Manager} reports to the {Recovery Manager} and is responsible for:

    - Coordinating the development and implementation of the recovery plan and procedures.

- Ensuring that adequate engineering activities to restore the plant, are properly reviewed and approved.
- Directing all onsite activities in support of the site recovery effort.
- Designating other Licensee recovery positions required in support of onsite recovery activities.

c. The {Recovery Offsite Manager}: A senior Emergency Preparedness or {Regulatory Affairs} individual, or a designated alternate, is the {Recovery Offsite Manager}. The {Recovery Offsite Manager} reports to the {Recovery Manager} and is responsible for:

- Providing liaison with offsite agencies and coordinating the Licensee assistance for offsite recovery activities.
- Coordinating Licensee ingestion exposure pathway EPZ sampling activities and the development of an offsite accident analysis report.
- Developing a radiological release report.
- Designating other Licensee recovery positions required in support of offsite recovery activities.

d. The {Company Spokesperson}: A senior management individual is designated as the {Company Spokesperson}. The {Company Spokesperson} reports to the {Recovery Manager} and is responsible for:

- Functioning as the official spokesperson to the press for the Licensee on all matters relating to the accident or recovery.
- Coordinating with all public information groups (federal, {state}, local, etc.).
- Coordinating media monitoring and rumor control.
- Determining what public information portions of the ERO will remain activated.

The remainder of the recovery organization is established and an initial recovery plan developed at the end of the emergency phase or just after entry into the recovery phase. Consideration is given to recovery activity needs and use of the normal site organizations. Individual recovery supervisors may be designated in any or all of the following areas:

- Training
- Radiation Protection
- Chemistry
- Technical/Engineering Support

- Quality Assurance and Performance Improvement
- Operations
- Security
- Maintenance
- Special Offsite Areas (Community Representatives, Environmental Samples, Investigations, etc.)

3. Recovery Phase Notifications

When the decision is made to enter the recovery phase, all members of the ERO are informed of the change. All Licensee personnel are instructed of the Recovery Organization and their responsibilities to the recovery effort.

4. Total Population Exposure

Total population exposure calculations are performed and periodically updated during the recovery phase of an accident. A method has been developed for estimating the total population exposure resulting from the accident from data collected in cooperation with the {state} and federal agencies. Total population exposure is determined through a variety of procedures including:

- Examination of pre-positioned TLDs.
- Bioassay.
- Estimates based on release rates and meteorology.
- Estimates based on environmental monitoring of food, water, and ambient dose rates.

The {state} will be the lead agency in the collection and analysis of environmental air, soil, foliage, food, and water samples and for the generation of radiation monitoring reports. The Licensee environmental sampling activities will be coordinated with {state} efforts, as requested, and results shared with cognizant agencies.

Section N: Drill and Exercise Program

This section describes the Drill and Exercise Program that the Licensee has implemented to:

- Verify the adequacy of the Emergency Preparedness Program.
- Develop, maintain, and evaluate the capabilities of the ERO to respond to emergency conditions and safeguard the health and safety of site personnel and the general public.
- Identify deficiencies in the E-Plan and the associated procedures, or in the training of response personnel, and ensure that they are promptly corrected.
- Ensure the continued adequacy of emergency facilities, supplies and equipment, including communications networks.

1. Exercises

a. Biennial Exercises

Federally prescribed exercises are conducted at the site in order to test the adequacy of timing and content of implementing procedures and methods; to test emergency equipment and communication networks; and to ensure that emergency personnel are familiar with their duties. Exercises involving offsite agency participation, required under Section F.2.c & d to 10 CFR 50 Appendix E, are conducted at the site based on FEMA guidance and the respective {state} and local emergency response plans.

Partial participation means appropriate offsite authorities shall actively take part in the exercise sufficient to test direction and control functions to include protective action decision making related to Emergency Action Levels and communication capabilities among affected {state} and local authorities and the Licensee.

Full participation exercises will include appropriate offsite local and {state} authorities and Licensee personnel physically and actively taking part in testing the integrated capability to adequately assess and respond to an accident at the plant. Additionally, full participation exercises will includes testing the major observable portions of the onsite and offsite emergency plans and mobilization of {state}, local, and Licensee personnel and other resources in sufficient numbers to verify the capability to respond to the accident scenario.

Where partial or full participation by offsite agencies occurs, the sequence of events simulates an emergency that results in the release of radioactivity to the offsite environs, sufficient in magnitude to warrant a response by offsite authorities.

Since the {CCNPP Unit 3} Nuclear Power Plant has units with different licensees located on the adjacent sites that share most of the elements defining co-located licensees, each licensee shall:

(1) Conduct an exercise biennially of its onsite emergency plan; and

(2) Participate {quadrennially} in an offsite biennial full or partial participation exercise; and

(3) Conduct emergency planning activities and interactions in the years between its participation in the offsite full or partial participation exercise with offsite authorities, to test and maintain interface among the affected {state} and local authorities and the licensee.

(4) Participate in emergency preparedness activities and interaction with offsite authorities for the period between exercises.b. Off-Year Exercises

An Off-Year Exercise is conducted at the site during the calendar year when an NRC Evaluated Exercise is not scheduled. An Off-Year Exercise shall involve a combination of at least two facilities in order to demonstrate at least two of the functions of management and coordination of emergency response, accident assessment, protective action decision-making, or plant system repair and corrective actions. {state} and local government agencies may request to participate in Off-Year Exercises and/or drills. For Off-Year Exercises involving no or limited participation by offsite agencies, emphasis is placed on development and conduct of an exercise that is more mechanistically and operationally realistic. Players will be able, by implementing appropriate procedures and corrective actions, to determine the outcome of the scenario to a greater extent than when core damage and the release of radioactivity are prerequisites for demonstration of all objectives.

c. Pre-Exercises

Pre-Exercise Drills may be conducted prior to a Biennial Exercise where FEMA evaluation of {state} and local performance is expected. Pre-Exercise Drills may be conducted prior to Off-Year Exercises that only involve the licensee. The Pre-Exercise is a training and experience tool for the participants to sharpen awareness and practice skills necessary to accomplish specific E-Plan duties and responsibilities.

Exercises provide an opportunity to evaluate the ability of participating organizations to implement a coordinated response to postulated emergency conditions. Exercises are conducted to ensure that all major elements of the E-Plan and preparedness program are demonstrated {at least once in each six-year period} and under various weather conditions. (The site shall conduct at least one off-hours exercise between 6:00 p.m. and 4:00 a.m. every cycle (6 years). Weekends and holidays are also considered off-hours periods.} Provisions will be made for qualified personnel from the Licensee, federal, {state}, or local governments to observe and critique each exercise as appropriate. A {state} should fully participate in the ingestion pathway portion of exercises at least once every six years. {In states with more than one site, the {state} may rotate this participation from site to site.}

2. Drills

In addition to the exercises described above, the Licensee conducts drills for the purpose of testing, developing, and maintaining the proficiency of emergency responders. A schedule of drills is maintained by Emergency Preparedness. The schedule contains provisions for the following drills:

a. Communication Drills

- {Monthly} - The capability of the {State} / local notification system to notify the {state} and local government warning points and EOCs within the plume exposure pathway EPZ are demonstrated. Also, the capability to notify the NRC is demonstrated monthly using the Emergency Notification System (ENS) and the Health Physics Network (HPN) where available.

- {Quarterly} - The capability to notify the NRC Region, FEMA Region, American Nuclear Insurers (ANI) and federal emergency response organizations as listed in the Emergency Telephone Directory are demonstrated from the EOF. Also, computer and critical communications equipment shall be functionally tested.

  {Communications between states outside the 10-mile (16-kilometer) EPZ but within the 50-mile (80-kilometer) EPZ are tested by the host state.}

- {Annually} - The emergency communications systems outlined in Section F are fully tested. This includes (1) communications between the plant and the {state} and local EOCs and Monitoring Teams, and (2) communications between the CR, the TSC, and the EOF.

Each of these drills includes provisions to ensure that all participants in the test are able to understand the content of the messages. Communications drills may be included as part of other drills or exercises.

b. Fire Drills: Fire drills shall be conducted in accordance with the Fire Protection Plan and/or Site procedures.

c. Medical Emergency Drills: A medical emergency drill, involving a simulated contaminated individual, and containing provisions for participation by local support services organizations (i.e., ambulance and support hospital) are conducted {annually}. Local support service organizations, which support more than one plant, shall only be required to participate {once each calendar year}. The offsite portions of the medical drill may be performed as part of the required biennial exercise.

d. Radiological Monitoring Drills: Plant environs and radiological monitoring drills (onsite and offsite) are conducted {annually}. These drills include collection and analysis of all sample media (such as, water, vegetation, soil, and air), and provisions for communications and record keeping.

e. Health Physics Drills: Health Physics Drills involving a response to, and analysis of, simulated airborne and liquid samples and direct radiation measurements within the plant are conducted semi-annually. {At least annually}, these drills shall include a demonstration of the sampling system capabilities, or the core damage assessment objectives as applicable.

f. Augmentation Drills: Augmentation drills serve to demonstrate the capability of the process to augment the on-shift staff with a TSC, OSC and EOF in a short period after declaration of an emergency. These drills are conducted using the following methods:

- {Quarterly} an unannounced off-hours ERO augmentation drill where no actual travel is required.

- {At least once per drill cycle (every 6 years)} an off-hours unannounced activation of the ERO notification system with actual response to the emergency facilities is conducted.

g. Accountability Drills: Accountability drills are conducted {once per drill cycle (every 6 years)}. The drill includes identifying the locations of all individuals within the protected area.

3. Conduct of Drills and Exercises

Advance knowledge of the scenario will be kept to a minimum to allow "free-play" decision making and to ensure a realistic participation by those involved. Prior to the drill or exercise, a package will be distributed to the controllers and evaluators that will include the scenario, a list of performance objectives, and a description of the expected responses.

For each emergency preparedness exercise or drill conducted, a scenario package or lesson plan is developed that includes at least the following:

a. The basic objective(s) of the drill or exercise and the appropriate evaluation criteria.

b. The date(s), time period, place(s), and participating organizations.

c. The simulated events.

d. A master scenario events list.

e. A narrative summary describing the conduct of the scenario to include such things as simulated casualties, offsite fire department assistance, rescue of personnel, use of protective clothing, deployment of radiological monitoring teams, and public information activities.

f. A list of qualified participants.

Prior approval by the appropriate unit management is obtained for all drills and exercises conducted in support of the Emergency Preparedness Program. {CCNPP Unit 3} should enable any {state} or local government located within the plume exposure pathway EPZ to participate in drills when requested by such {state} or local government.

4. Critique and Evaluation

Drill and exercise performance objectives are evaluated against measurable demonstration criteria. As soon as possible following the conclusion of each drill or exercise, a critique is conducted to evaluate the ability of the ERO to implement the E-Plan and procedures.

A formal written critique report is prepared by Emergency Preparedness following a drill or exercise involving the evaluation of designated objectives or following the final simulator set with ERO participation. The report will evaluate the ability of the ERO to respond to a simulated emergency situation. The report will also contain corrective actions and recommendations.

Biennially, representatives from the NRC observe and evaluate the licensee's ability to conduct an adequate self-critical critique. For partial and full offsite participation exercises both the NRC and FEMA will observe, evaluate, and critique.

Critique comments identified by participants during a training drill where objectives are not formally being evaluated will be reviewed and dispositioned by Emergency Preparedness, but do not require a formal report.

5. Resolution of Drill and Exercise Findings

The critique and evaluation process is used to identify areas of the Emergency Preparedness Program that require improvement. The Emergency Preparedness Manager is responsible for evaluation of recommendations and comments to determine which items will be incorporated into the program or require corrective actions, and for the scheduling, tracking, and evaluation of the resolution to the items.

Whenever exercises and/or drills indicate deficiencies in the E-Plan or corresponding implementing procedures, such documents will be revised as necessary.

If required, {CCNPP Unit 3} will support remedial exercises if the E-Plan is not satisfactorily tested during the biennial exercise, such that NRC, in consultation with FEMA, cannot find reasonable assurance that adequate protective measures can be taken in the event of a radiological emergency.

Section O: Emergency Response Training

This section describes the emergency response training that is provided to those who may be called upon in an emergency. It outlines the training provided by the Licensee to both its employees and offsite support personnel requiring site access.

1. Assurance of Training

The E-Plan training program assures the training, qualification, and requalification of individuals who may be called on for assistance during an emergency. Specific emergency response task training, prepared for each E-Plan position, is described in lesson plans and study guides. The lesson plans, study guides, and written tests are contained in the ERO Training Program. Responsibilities for implementing the training program are contained in plant procedures. {A description of the content of the training courses is given in an approved station training manual}.

Offsite training is provided to support organizations that may be called upon to provide assistance in the event of an emergency. The following outlines the training received by these organizations:

a. Emergency Preparedness shall {annually train, or document an annual written offer to train}, those non-Licensee organizations that may provide specialized services during a nuclear plant emergency (e.g., local law enforcement, fire-fighting, medical services, transport of injured, etc.). The training made available is designed to acquaint the participants with the special problems potentially encountered during a nuclear plant emergency, notification procedures and their expected roles. Those organizations that must enter the site shall also receive site-specific emergency response training and be instructed as to the identity (by position and title) of those persons in the onsite organization who will control their support activities.

b. Training of offsite emergency response organizations is described in their respective radiological emergency plans, with support provided by the Licensee as requested.

2. Functional Training of the ERO

In addition to general and specialized classroom training, members of the Licensee ERO receive periodic performance based emergency response training. Performance based training is provided using one or more of the following methods:

- Familiarization Sessions: A familiarization session is an informal, organized tabletop discussion of predetermined objectives.

- Walk Throughs: Consists of a facility walk through to familiarize plant ERO personnel with procedures, communications equipment, and facility layout. Walk throughs also provide the opportunity to discuss facility activities, responsibilities and procedures with an instructor.

- Drills: A drill is a supervised instruction period aimed at testing, developing and maintaining skills in a particular operation. Drills described in Section N of this plan are a part of training. These drills allow each individual to demonstrate the ability to perform their assigned emergency functions. During drills, on-the-spot correction of erroneous performance may be made and a demonstration of the proper performance offered by the Controller.

3. First Aid Response

Selected site personnel are trained in accordance with the Licensee approved First Aid program. First-Aid teams will likely be augmented with additional personnel such as Fire Brigade Members and other personnel qualified to assist in the rescue.

4. Emergency Response Organization Training Program

The Licensee ERO personnel who are responsible for implementing this plan receive specialized training. The training program for emergency response personnel is developed based on the requirements of 10 CFR 50, Appendix E and position specific responsibilities as defined in this document.

On-Shift emergency response personnel perform emergency response activities as an extension of their normal duties and are trained {annually} as part of their duty specific training. Additional Emergency Preparedness information is provided as part of the site General Employee Training.

New ERO personnel receive an initial overview course that familiarizes them with the E-Plan by providing basic information in the following areas as well as specific information as delineated in the sections below:

- Planning Basis
- Emergency Classifications
- Emergency Response Organization and Responsibilities
- Call-out of Emergency Organization
- Emergency Response Facilities
- Communications Protocol/Emergency Public Information
- Offsite Organizations

Emergency response personnel in the following categories receive knowledge and/or performance based training initially and retraining thereafter on a {calendar year} basis:

a. Directors, Managers and Coordinators within the ERO: Personnel identified by the Emergency Telephone Directory as Directors, Managers and Coordinators for the EROs receive training appropriate to their position in accordance with the approved ERO training program. These personnel receive specialized training in the areas of:

- Notifications
- Emergency Classifications
- Protective Action Recommendations
- Emergency Action Levels
- Emergency Exposure Control

Selected Directors, Managers, Coordinators and {Shift Supervisors} receive training in accordance with the approved ERO Training Program. Training in accident assessment sufficient to classify an event and to mitigate the consequences of an event is also covered.

b. Personnel Responsible for Accident Assessment:

The skills and knowledge required to perform plant stabilization and mitigation are a normal function of operations specific positions, as identified in Section B of this plan. Power changes and planned and unplanned reactor shutdowns are handled on a normal operation basis. Subsequent plant stabilization and restoration is pursued utilizing normal operating procedures. Licensed Operators receive routine classroom and simulator training to ensure proficiency in this area.

1) Active Senior Licensed Control Room Personnel shall have training conducted in accordance with the approved ERO training program such that proficiency is maintained on the topics listed below. These subjects shall be covered as a minimum on an annual basis.

- Event Classification.
- Protective Action Recommendations.
- Radioactive Release Rate Determination.
- Notification form completion and use of the {state} / local notification system.

- Federal, {state} and local notification procedures as appropriate.
- Site specific procedures for activating the onsite and offsite ERO.

To remove peripheral duties from the Operations shift, those positions responsible for accident assessment, corrective actions, protective actions, and related activities receive training.

2) Core Damage Assessment Personnel: During an emergency when core/cladding damage is suspected, a specialized group of trained individuals perform core damage assessment. At a minimum, personnel responsible for core damage assessment receive classroom and hands-on training in the following areas:

- Available Instrumentation and Equipment
- Isotopic Assessment and Interpretation
- Computerized core damage assessment methodology and/or proceduralized assessment methods.

c. Radiological Monitoring Teams and Radiological Analysis Personnel

1) Offsite Radiological Monitoring: Offsite radiological monitoring is performed by trained individuals who provide samples and direct readings for dose assessment calculations and dose projection comparisons.

Personnel identified as members of Monitoring Teams receive training in accordance with the approved training program. Monitoring Team members receive classroom and hands-on training in the following areas:

- Equipment and Equipment Checks
- Communications
- Plume Tracking Techniques

2) Personnel Monitoring: Personnel monitoring is performed by trained individuals who monitor site personnel and their vehicles for contamination during an emergency. Personnel Monitoring Team members receive classroom and hands-on training in the following areas:

- Personnel Monitoring Equipment and Techniques
- Decontamination Techniques for Personnel
- Decontamination Techniques for Vehicles

3) Dose Assessment: Dose Assessment training includes the skills and knowledge necessary for calculation and interpretation of an offsite release and its impact on the environment under varying meteorological conditions. Individuals responsible for performing dose assessment are trained in the following areas:

- Computerized Dose Assessment
- Protective Action Recommendations
- Monitoring Team Interface
- Protective Action Guidelines associated with offsite plume exposure doses
- Basic Meteorology

d. Police, Security, and Fire Fighting Personnel

1) Local Police and Fire Fighting Personnel: The local Police and Fire Departments are invited to receive training as outlined in Part 1.a of this section.

2) Security Personnel: Site security personnel are trained in accordance with training defined by the General Employee Training (GET) and the Licensee Security Plan.

3) Fire Control Teams (fire brigades): Site fire brigades are trained in accordance with training defined by the Licensee Fire Protection Program. Fire Brigade personnel are considered the primary members of rescue teams and will receive the appropriate EP training as part of their training program. Training also includes rescue of personnel from hazardous environments.

e. Repair Teams: Operations, Maintenance and Radiation Protection personnel are trained as part of their normal job specific duties to respond to both normal and abnormal plant operations.

Operations personnel are trained to: (1) recognize and to mitigate degrading conditions in the plant, (2) mechanically and electrically isolate damaged or malfunctioning equipment, (3) isolate fluid leaks, and (4) minimize transients.

Maintenance personnel are trained to troubleshoot and repair damaged or malfunctioning electrical, mechanical, or instrumentation systems as appropriate to their job classification.

Radiation Protection personnel are trained to assess the radiological hazards associated with equipment repair and instruct personnel as to the appropriate protective clothing requirements, respiratory protection requirements, stay times, and other protective actions specific to the conditions present.

{At least 50%} of personnel from those departments, who are potential responders to the OSC as repair team members, are required to be qualified in the use of full face respirators. This includes in-plant supervision and craft/technicians for the following departments:

- Operations
- Radiation Protection
- Chemistry
- Maintenance (mechanical, electrical and I&C)

f. First Aid and Rescue Personnel: First aid and rescue team members receive training as outlined in Part 3 of this section.

g. Local Support Service Personnel: Local support service personnel providing assistance during an emergency are invited to receive training as outline in Parts 1.a and 1.b of this section.

h. Medical Support Personnel: Onsite medical personnel receive specialized training in the handling of contaminated victims and hospital interface. Offsite ambulance and hospital personnel are offered annual training in accordance with a program provided by Emergency Preparedness.

i. Public Information Personnel: Corporate and station personnel responsible for disseminating emergency public information and responding to media and public information requests receive specialized public information training.

j. Communications Personnel: ERO personnel receive training on communications protocol as a part of the initial Emergency Response Overview Course. Personnel using specialized communications equipment that is not part of their normal daily function receive initial and requalification training on the equipment. Personnel involved in notifications to offsite agencies receive specialized training in the notification process.

5. General, Initial, and Annual Training Program Maintenance

a. Station departments and Emergency Preparedness share the responsibility for ensuring that the ERO receives all necessary training and retraining. In order to carry this out, responsibilities are assigned as follows:

Responsibilities for Emergency Preparedness

- Scheduling and conducting initial, retraining, and make-up classes.
- Acting as the contact point for ensuring attendance.
- Record keeping for the training courses, including dates of scheduled classes and non-attendance information.

- Verifying that all emergency response personnel training records are current.
- Ensure instructional materials are prepared and reviewed every two years.

Responsibilities for other Plant ERO Personnel

- Site management shall ensure the attendance of onsite personnel for training, including required E-Plan courses.
- The Site shall conduct onsite emergency personnel initial and retraining for site Emergency Response Personnel using approved lesson plans.
- The Site Training Department(s) shall provide those shift personnel included in a continuing training program an annual review of the following items as a minimum:
  - Assembly Areas
  - Emergency Response Facility assignment
  - Potential Hazards (radiological and non-radiological)
  - Anticipated actions including assembly requirements, protective equipment requirements (clothing, masks, SCBA, etc.), the use of KI, emergency exposure limits and accountability requirements.

b. Initial and Requalification ERO Training: The proficiency of emergency response personnel (as defined in 10 CFR 50 Appendix E) is ensured by the following means:

- Assigning persons to emergency duties that are similar to those performed as a part of their regular work assignment or experience.
- Initial training and annual retraining on applicable generic and site-specific portions of the E-Plan and the corresponding implementing procedures. Individuals not demonstrating the required level of knowledge in initial or retraining classes receive additional training on the areas requiring improvement. {Annual retraining is conducted on a calendar year basis.}
- Participation in exercises and/or drills as developed or authorized by the Emergency Preparedness Department and designed to sharpen those skills that they are expected to use in the event of a nuclear emergency.

All personnel assigned position specific responsibilities in the ERO are documented by inclusion in the Emergency Telephone Directory listing of positions and personnel.

c. General Employee Training (GET): All personnel with unescorted site access are provided with initial orientation training on the notification and instruction methods used in the event of an emergency. Additionally, all badged individuals also receive initial orientation on the basic principles of radiological safety including the effects of radiation and the theory and use of radiation detection devices. Appropriate actions for escorted individuals shall be the responsibility of the escort. GET provides initial and annual requalification training on the basic elements of the E-Plan for all personnel working at the plant. Specifically, these elements include:

- Site emergency alarms and their meaning
- Assembly areas
- Site and Exclusion Area Evacuation procedures
- Special precautions and limitations during an emergency
- Purpose of the E-Plan

Section P: Responsibility for the Maintenance of the Planning Effort

This section describes the responsibilities for development, review and distribution of the E-Plan and actions that must be performed to maintain the emergency preparedness program. It also outlines the criteria for insuring that personnel who perform the planning are properly trained.

1. Emergency Preparedness Staff Training

The Emergency Preparedness staff is involved in maintaining an adequate knowledge of state of the art planning techniques and the latest applications of emergency equipment and supplies. {At least once each calendar year each member of the Emergency Preparedness staff is involved in one of the following activities:}

- {Training courses specific or related to emergency preparedness.}
- {Observation of or participation in drills and/or exercises at other stations.}
- {Participation in industry review and evaluation programs.}
- {Participation in regional or national emergency preparedness seminars, committees, workshops or forums.}

2. Authority for the Emergency Preparedness Effort

The {Site Vice President} is responsible for the safe and reliable operation of the {CCNPP Unit 3} unit. The issuance and control of this plan and the activities associated with emergency preparedness at {CCNPP Unit 3} shall be the overall responsibility of the {Site Vice President}. These individuals are assigned the responsibility for overall implementation of the Licensee E-Plan and Unit Annex for {CCNPP Unit 3}.

3. Responsibility for Development and Maintenance of the Plan

The {Emergency Preparedness Manager} is responsible for the overall radiological emergency preparedness program associated with the operation of the nuclear power plant and to administer the program to ensure availability of resources in the event of an emergency.

The {Emergency Preparedness Manager} is assisted by an Emergency Preparedness Staff. Specific responsibilities include the following:

<u>Program Administration</u>

- Develop and maintain the E-Plan, Unit Annex, implementing procedures and administrative documents.
- Develop and maintain 10 CFR 50.54(q) evaluations for changes to EP documents.

- Develop and maintain working relationships and coordinate meetings with Federal, {State} and Local agencies.
- Ensure integration of plans between the Licensee and offsite agencies.
- Provide an opportunity to discuss Emergency Action Levels and the availability of {quality assurance} audit results relating to interface with governmental agencies.
- Coordinate, negotiate and maintain agreements and contracts with offsite agencies and support organizations.
- Obtain Letters of Agreement with major medical facilities, and medical consultants specifically skilled in the medical aspects of radiation accidents and other medical consultants as might be necessary for the case of a person involved in a radiation incident.
- Coordinate the development and annual distribution of the {CCNPP Unit 3} public information publication.
- Coordinate and support EP Self-Assessments, Audits and Inspections.
- Ensure the documentation and resolution of adverse conditions in the emergency preparedness program discovered through drills, audits, etc. in accordance with the Licensee Corrective Action Program.
- Coordinate and develop Operational Experience responses.
- Coordinate, document and review Performance Indicator data and reports.
- Provide oversight of Drill and Exercise Performance (DEP) evaluations during License Operator Requalification (LOR) Training.
- Coordinate and conduct EP Event reviews and reports.
- Maintain adequate documentation/files to support EP activities.
- Develop and manage the EP budget.
- Maintain the Emergency Telephone Directory.

Inter-Unit Coordination

Coordinate with CCNPP Unit 1 and 2 Emergency Preparedness Staff to ensure:

- Consistency in planning with offsite authorities.
- Consistency in providing Emergency Preparedness information to the public.
- Operations and Maintenance of shared Emergency Plan equipment / facilities.

- Site wide protective actions (notifications, assembly, evacuation, etc) including Security's actions.
- Proper scheduling of Full Participation Exercises.

Drills and Exercises

- Coordinate and maintain the EP Drill and Exercise Schedule.
- Coordinate and conduct exercises and drills.
- Coordinate NRC, FEMA, {state}, and local exercise scheduling and development activities.
- Coordinate drill and exercise scenario development activities.
- Develop and publish drill and exercise scenario manuals.
- Coordinate and perform controller and evaluator functions for drills and exercises.
- Coordinate response cells for drills and exercises.
- Develop and issue drill and exercise reports.

Facilities and Equipment

- Provide maintenance and administration of the {Public Alert and Notification System (PANS)}.
- Provide maintenance of the ERO call-out system.
- Ensure the Emergency Response Facilities are maintained in a constant state of readiness.
- Coordinate and review the EP equipment inventories.
- Coordinate and conduct maintenance and testing of the communications systems.
- Maintain the EP computer applications.

ERO Qualification and Administration

- Develop and maintain ERO Lesson Plans, Examinations, and Qualification Cards.
- Maintain EP GET training content.
- Coordinate, schedule and conduct ERO qualification and requalification training.

- Oversee the maintenance of ERO training records.
- Maintain and coordinate publishing of the ERO Duty Rosters.
- Provide adequate oversight and support for the training of offsite response personnel.
- Coordinate conduct of Emergency Medical Assistance Program training.
- Coordinate annual training for the media.

4. Emergency Plan and Agreement Revisions

The E-Plan, its Unit Annex, and supporting Agreements are reviewed on an annual basis. This review may also include applicable {state} and local emergency response agencies based on established agreements.

The {annual} E-Plan review/update includes required changes identified during audits, assessments, training, drills, and exercises. The Emergency Preparedness Manager is responsible for determining which recommended changes are incorporated into a plan or emergency procedure revision. {In those years when the review does not warrant a revision, a letter to that affect will be issued.}

The E-Plan and its Annex shall be revised as needed and the most current approved revisions shall remain in effect so long as they are certified as current. Revisions to the E-Plan are reviewed by the Sites' {plant oversight review committee/independent review committee} prior to approval. Changes to the plan are made without NRC approval only if such changes do not decrease the effectiveness of the plan per 10 CFR 50.54(q) and the plan as changed continues to meet the standards of 10 CFR 50.47(b) and the requirements of 10 CFR 50, Appendix E. Proposed changes that decrease or have a potential to decrease the effectiveness of the approved plan are not implemented without prior approval by the NRC.

- Proposed revisions to the E-Plan and Unit Annex shall be completed in accordance with the Licensee review and approval processes.
- E-Plan and Unit Annex changes shall be categorized as (1) minor/ administrative or (2) significant programmatic changes. Minor/administrative changes shall be implemented {within 30 days} of approval. Significant programmatic changes shall be implemented as soon as practical and {within 60 days} of final approval.
- After review and approval, the E-Plan and Unit Annex shall be:

  a) Reviewed by the {Emergency Preparedness Manager} or designee, and

  b) Approved for use by the {Site Vice President}, or designee.

- The Implementing Procedures shall be developed and revised concurrent with the E-Plan and Unit Annex, and reviewed every {two years}.

{Annually}, each Letter of Agreement is reviewed and verified current in order to assure the availability of assistance from each supporting organization not already a party to the individual {State} and/or local emergency plan.

5. Emergency Plan Distribution

E-Plan manuals, Unit Annex and implementing procedures are distributed as necessary on a controlled basis to the Emergency Response Facilities. All controlled documents holders are issued revision changes upon approval. Selected Federal, {state}, and local agencies, and other appropriate locations requiring them are also issued copies. Procedures are in place that control the revision of the E-Plan and {require the use of revision bars and individual page identifications (i.e. section of plan, revision number, date of revision, etc.)}.

6. Supporting Emergency Response Plans

Other plans that support this E-Plan are:

- NUREG-1471, US Nuclear Regulatory Commission, "Concept of Operations: NRC Incident Response"
- National Response Plan
- {10 Mile (16 Kilometer) EPZ State Plan(s), see section A.1 of this plan for detailed listing of state plans.}
- {10 Mile (16 Kilometer) EPZ Local Community Plan(s), see section A.1 of this plan for detailed listing of local plans.}
- {50 Mile (80 Kilometer) EPZ State Plan(s), see section A.1 of this plan for detailed listing of state plans.}
- Department of Energy, Region 1, “Radiological Assistance Plan"
- INPO Emergency Resources Manual.
- {Calvert Cliffs Nuclear Power Plant Unit 3} Security Plan - Note: The {Calvert Cliffs Nuclear Power Plant Unit 3} Security Plan contains safeguards information that must be protected from unauthorized disclosure under provisions of 10 CFR 73.21.

7. Implementing and Supporting Procedures

Appendix 2 of this plan contains a listing, by number and title, of those procedures that implement this plan during an emergency. Additionally, administrative procedures that outline the steps taken to maintain the {CCNPP Unit 3} Emergency Preparedness Program have been developed and are listed in Appendix 2.

8. Cross Reference to Planning Criteria

The Plan contains a table of contents and is formatted in the same manner as NUREG-0654, FEMA-REP-1, Revision 1, "Criteria for Preparation and Evaluation of Radiological Emergency Response Plans and Preparedness in support of Nuclear Power Plants." The use of this format lends itself to uncomplicated comparison of the criteria set forth in NUREG-0654, FEMA-REP-1.

Appendix 1, References provides cross references of other planning standards to section of the plan.

9. Audit/Assessment of the Emergency Preparedness Program

To meet the requirements of 10 CFR 50.54(t), the Licensee shall coordinate an independent review of the Emergency Preparedness Program {at least every 12 months} to examine conformance with 10 CFR 50.47, 10 CFR 50.54, and 10 CFR 50 Appendix E. Included in the audit/assessment are the following:

- The E-Plan and associated implementing procedures.
- The Emergency Preparedness training program including drills and exercises.
- The readiness of the {CCNPP Unit 3} ERO(s) to perform its function.
- The readiness of facilities and equipment to perform as outlined in the plan and procedures.
- The interfaces between the Licensee, the {state}, and local governmental agencies pertaining to the overall Emergency Preparedness Program.

Results of this audit are submitted for review to Site Management and the {Site Vice President}. The {Emergency Preparedness Manager} ensures that any findings that deal with offsite interfaces are reviewed with the appropriate agencies. Written notification will be provided to the appropriate {state} and local authorities of the performance of the audit and the availability of the audit records for review at the Licensee facilities. Management controls shall be implemented for evaluation and correction of review findings. Records of the audit are maintained for {at least five years}.

10. Maintenance of Emergency Telephone Directory

Names and phone numbers of the Emergency Response Organization and support personnel shall be reviewed and updated {at least quarterly}.

PART III: Appendices

Appendix 1: References

References consulted in the writing of this E-Plan are listed in this section. With exception of regulatory requirements, inclusion of material on this list does not imply adherence to all criteria or guidance stated in each individual reference.

Guidance	Cross Reference / Use
1. 10 CFR 50.47, Emergency Plans	Entire Plan
2. 10 CFR 50.54, Conditions of Licenses	Plan Section P-4
3. 10 CFR 50.72, Immediate Notification Requirements for Operating Nuclear Power Reactors	Plan Section E
4. 10 CFR 50.73, Licensee Event Report System	Plan Section D-2
5. 10 CFR 50 Appendix E, Emergency Planning and Preparedness for Production and Utilization Facilities	See Table App1-1 at end of this section
6. 10 CFR 20, Standards for Protection Against Radiation	Section K
7. 10 CFR 73.21, Requirements for Protection of Safeguards Information.	Plan reviewed to ensure no Safeguards Information improperly included.
8. NUREG-0654, "Criteria for Preparation and Evaluation of Radiological Emergency Response Plans and Preparedness in Support of Nuclear Power Plants," Revision 1, November, 1980.	This plan is formatted to match NUREG-O654 numbering.
9. NUREG-0654, Supplement 3, "Criteria for Protective Action Recommendations for Severe Accidents," July 1996.	Section J
10. NUREG-0396, "Planning Basis for the Development of State and Local Government Radiological Emergency Response Plans in Support of Light Water Nuclear Power Plants," December 1978.	Section A-2 and Section B-7
11. NUREG-0696, Revision 1, Functional Criteria for Emergency Response Facilities, February 1981.	Section H

Guidance	Cross Reference / Use
12. US NRC Regulatory Guide 1.101, "Emergency Planning and Preparedness for Nuclear Power Reactors," Revision 4, July, 2003.	Section D-2
13. U.S. NRC Response Technical Manual (RTM-96), 1996.	Section C
14. EPA 400-R-92-001, October 1991, "Manual of Protective Action Guides and Protective Actions for Nuclear Incidents."	Section J-7 through J-10
15. FEMA-REP-10, “Guide for Evaluation of Alert and Notification Systems for Nuclear Power Plants,” November, 1985.	Section E-6
16. FEMA-REP-14, “Exercise Evaluation Methodology,” 1991.	Section N-4
17. FEMA-Guidance Memorandum, “MS-1 "Medical Services," November, 1986.	Section L-1
18. INPO Emergency Resources Manual	Section P-6
19. "Maintaining Emergency Preparedness Manual," dated December, 1996 INPO 96-009.	Section P
20. Comprehensive Environmental Response, Compensation and Liability Act of 1980.	Section B-8
21. American Nuclear Insurers Bulletin #5B (1981), "Accident Notification Procedures for Liability Insureds".	Section B-8
22. ANI/MAELU Engineering Inspection Criteria For Nuclear Liability Insurance, Section 6.0, Rev. 1, "Emergency Planning."	Section B-8
23. "Potassium Iodide as a Thyroid Blocking Agent in a Radiation Emergency: Final Recommendations on Use," Federal Register Vol. 47, No. 125, June 29, 1982.	Section J-6

Guidance	Cross Reference / Use
24. INPO Coordination agreement on emergency information among USCEA, EPRI, INPO, NUMARC and their member utilities, dated April (1988).	Section A-3
25. EPPOS No. 2, Rev. 0, “Timeliness of Classification of Emergency Condition,” August 1, 1995.	Section D
26. EPPOS No. 3, Rev. 0, “Requirement for Onshift Dose Assessment Capability, November 8, 1995.	{Unit 3 Annex} Table B-1a
27. EPPOS No. 5, Rev. 0, “Emergency Planning Information Provided to the Public,” December 4, 2002.	Section G
28. Regulatory Issue Summary (RIS) 2000-08, “Voluntary Submission of Performance Indicator Data,” March 29, 2000 (ADAMS Accession No. ML003685821).	Section P-3
29. RIS 2000-11, “NRC Emergency Telecommunications System,” June 30, 2000 (ADAMS Accession No. ML003727812).	Section F-1
30. RIS 2000-11, Supp. 1, “NRC Emergency Telecommunications System,” March 22, 2001 (ADAMS Accession No. ML010570103).	Section F-1
31. RIS 2001-16, “Update of Evacuation Time Estimates,” August 1, 2001 (ADAMS Accession No. ML012070310).	Section J-8
32. RIS 2003-12, “Clarification of NRC Guidance for Modifying Protective Actions,” June 24, 2003 (ADAMS Accession No. ML031680611).	Section J-10
33. RIS 2003-18, “Use of NEI 99-01, “Methodology for Development of Emergency Action Levels,” Revision 4, Dated January 2003,” October 8, 2003 (ADAMS Accession No. ML032580518).	Section D

Guidance	Cross Reference / Use
34. RIS 2003-18, Supp. 1, "Supplement 1, Use of Nuclear Energy Institute (NEI) 99-01, "Methodology for Development of Emergency Action Levels," Revision 4, Dated January 2003," July 13, 2004 (ADAMS Accession No. ML041550395).	Section D
35. RIS 2003-18, Supp. 2, "Supplement 2, Use of Nuclear Energy Institute (NEI) 99-01, "Methodology for Development of Emergency Action Levels," Revision 4, Dated January 2003," December 12, 2005 (ADAMS Accession No. ML051450482).	Section D
36. RIS 2005-02, "Clarifying the Process for Making Emergency Plan Changes," February 14, 2005 (ADAMS Accession No. ML042580404).	Section P-4
37. RIS 2005-08, "Endorsement of Nuclear Energy Institute (NEI) Guidance "Range of Protective Actions for Nuclear Power Plant Incidents"," June 6, 2005 (ADAMS Accession No. ML050870432).	Section J-10
38. RIS 2006-03, "Guidance on Requesting an Exemption from Biennial Emergency Preparedness Exercise Requirements," February 24, 2006 (ADAMS Accession No. ML053390039).	Section N-1
39. RIS 2006-12, "Endorsement of Nuclear Energy Institute Guidance "Enhancements to Emergency Preparedness Programs for Hostile Action"," July 19, 2006 (ADAMS Accession No. ML061530290).	Section D
40. IN 85-44, "Emergency Communication System Monthly Test," May 30, 1985.	Section F-1.f
41. IN 86-98, "Offsite Medical Services," December 2, 1986.	Section L-1
42. IN 87-58, "Continuous Communications Following Emergency Notification," November 16, 1987.	Section E-4

Guidance	Cross Reference / Use
43. IN 88-15, "Availability of U.S. Food and Drug Administration (FDA)-Approved Potassium Iodide for Use in Emergencies Involving Radioactive Iodine," April 18, 1988.	Section J-6.c
44. IN 93-81, "Implementation of Engineering Expertise on Shift," October 12, 1993.	Section B-1
45. IN 02-14, "Ensuring a Capability to Evacuate Individuals, Including Members of the Public, from the Owner-Controlled Area," April 8, 2002.	Section J-2

Table App 1-1, 10 CFR 50 Appendix E, Cross Reference		
AppE #	**STATEMENT**	**PLAN Section**
IV A.	The organization for coping with radiological emergencies shall be described, including definition of authorities, responsibilities, and duties of individuals assigned to the licensees emergency organization and the means for notification of such individuals in the event of an emergency.	B
IV A.1	A description of the normal plant operating organization.	B.1
IV A.2.a	A description of the onsite emergency response organization with a detailed discussion of: Authorities, responsibilities, and duties of the individual(s) who will take charge during an emergency;	B.2, B.3, B.4 B.5
IV A2.b	Plant staff emergency assignments;	B.5
IV A2.c	Authorities, responsibilities, and duties on an onsite emergency coordinator who shall be in charge of the exchange of information with offsite authorities responsible for coordinating and implementing offsite emergency measures.	B.5
IV A.3	A description, by position and function to be performed, of the licensee's headquarters personnel who will be sent to the plant site to augment the onsite emergency organization.	B.5.b, B7
IV A.4	Identification, by position and function to be performed, of persons within the licensee organization who will be responsible for making offsite dose projections, and a description of how these projections will be made and the results transmitted to state and local authorities, NRC, and other appropriate governmental entities.	B.5.a.12 B.5.b.7 B.5.b.8
IV A.5	Identification, by position and function to be performed, of other employees of the licensee with special qualifications for coping with emergency conditions that may arise. Other persons with special qualifications, such as consultants, who are not employees of the licensee and who may be called upon for assistance for emergencies shall also be identified. The special qualifications of these persons shall be described.	B.5 B.8
IV A.6	A description of the local offsite services to be provided in support of the licensee's emergency organization.	B.9
IV A.7	Identification of, and assistance expected from, appropriate state, local, and Federal agencies with responsibilities for coping with emergencies.	A.1 A.2
IV A.8	Identification of the state and/or local officials responsible for planning for, ordering, and controlling appropriate protective actions, including evacuations when necessary.	A.1
IV B	The means to be used for determining the magnitude of and for continually assessing the impact of the release of radioactive materials shall be described, including emergency action levels that are to be used as criteria for determining the need for notification and participation of local and state agencies, the Commission, and other Federal agencies, and the emergency action levels that are to be used for determining when and what type of protective measures should be considered within and outside the site boundary to protect health and safety. The emergency action levels shall be based on in-plant conditions and instrumentation in addition to onsite and offsite monitoring. These emergency action levels shall be discussed and agreed on by the applicant and state and local governmental authorities and approved by NRC. They shall also be reviewed with the state and local governmental authorities on an annual basis.	I.4 D {Unit 3 Annex}

Table App 1-1, 10 CFR 50 Appendix E, Cross Reference		
AppE #	**STATEMENT**	**PLAN Section**
IV C	The entire spectrum of emergency conditions that involve the alerting or activating of progressively larger segments of the total emergency organization shall be described. The communication steps to be taken to alert or activate emergency personnel under each class of emergency shall be described. Emergency action levels (based not only on onsite and offsite radiation monitoring information but also on readings from a number of sensors that indicate a potential emergency, such as the pressure in containment and the response of the Emergency Core Cooling System) for notification of offsite agencies shall be described. The existence, but not the details, of a message authentication scheme shall be noted for such agencies. The emergency classes defined shall include: (1) notification of unusual events, (2) alert, (3) site area emergency, and (4) general emergency. These classes are further discussed in NUREG - 0654; FEMA - REP - 1.	E
IV D.1	Administrative and physical means for notifying local, state, and Federal officials and agencies and agreements reached with these officials and agencies for the prompt notification of the public and for public evacuation or other protective measures, should they become necessary, shall be described. This description shall include identification of the appropriate officials, by title and agency, of the state and local government agencies within the EPZs.	F
IV D.2	Provisions shall be described for yearly dissemination to the public within the plume exposure pathway EPZ of basic emergency planning information, such as the methods and times required for public notification and the protective actions planned if an accident occurs, general information as to the nature and effects of radiation, and a listing of local broadcast stations that will be used for dissemination of information during an emergency. Signs or other measures shall also be used to disseminate to any transient population within the plume exposure pathway EPZ appropriate information that would be helpful if an accident occurs.	G.1
IV D.3	A licensee shall have the capability to notify responsible state and local governmental agencies within 15 minutes after declaring an emergency. The design objective of the prompt public notification system shall be to have the capability to essentially complete the initial notification of the public within the plume exposure pathway EPZ within about 15 minutes. The use of this notification capability will range from immediate notification of the public (within 15 minutes of the time that state and local officials are notified that a situation exists requiring urgent action) to the more likely events where there is substantial time available for the state and local governmental officials to make a judgment whether or not to activate the public notification system. Where there is a decision to activate the notification system, the state and local officials will determine whether to activate the entire notification system simultaneously or in a graduated or staged manner. The responsibility for activating such a public notification system shall remain with the appropriate governmental authorities.	E
IV 4.E.1	Adequate provisions shall be made and described for emergency facilities and equipment, including: Equipment at the site for personnel monitoring;	H
IV 4.E.2	Equipment for determining the magnitude of and for continuously assessing the impact of therelease of radioactive materials to the environment;	H
IV 4.E.3	Facilities and supplies at the site for decontamination of onsite individuals;	H
IV 4.E.4	Facilities and medical supplies at the site for appropriate emergency first aid treatment;	L.2
IV 4.E.5	Arrangements for the services of physicians and other medical personnel qualified to handle radiation emergencies on-site;	L.3
IV 4.E.6	Arrangements for transportation of contaminated injured individuals from the site to specifically identified treatment facilities outside the site boundary;	L.4

Table App 1-1, 10 CFR 50 Appendix E, Cross Reference		
AppE #	**STATEMENT**	**PLAN Section**
IV 4.E.7	Arrangements for treatment of individuals injured in support of licensed activities on the site at treatment facilities outside the site boundary;	L.1
IV 4.E.8	A licensee onsite technical support center and a licensee near-site emergency operations facility from which effective direction can be given and effective control can be exercised during an emergency;	H.1 H.2
IV 4.E.9	At least one onsite and one offsite communications system; each system shall have a backup power source. All communication plans shall have arrangements for emergencies, including titles and alternates for those in charge at both ends of the communication links and the primary and backup means of communication.	F.1
IV 4.E.9.a	Where consistent with the function of the governmental agency, these arrangements will include: Provision for communications with contiguous state/local governments within the plume exposure pathway EPZ. Such communications shall be tested monthly.	F.3 N.2.a
IV 4.E.9.b	Provision for communications with Federal emergency response organizations. Such communications systems shall be tested annually.	N.2.a
IV 4.E.9.c	Provision for communications among the nuclear power reactor control room, the onsite technical support center, and the near-site emergency operations facility; and among the nuclear facility, the principal state and local emergency operations centers, and the field assessment teams. Such communications systems shall be tested annually.	N.2.a
IV 4.E.9.d	Provisions for communications by the licensee with NRC Headquarters and the appropriate NRC Regional Office Operations Center from the nuclear power reactor control room, the onsite technical support center, and the near-site emergency operations facility. Such communications shall be tested monthly.	N.2.a
IV F.1.i	The program to provide for: (a) The training of employees and exercising, by periodic drills, of radiation emergency plans to ensure that employees of the licensee are familiar with their specific emergency response duties, and (b) The participation in the training and drills by other persons whose assistance may be needed in the event of a radiation emergency shall be described. This shall include a description of specialized initial training and periodic retraining programs to be provided to each of the following categories of emergency personnel: Directors and/or coordinators of the plant emergency organization;	O.4.a
IV F.1.ii	Personnel responsible for accident assessment, including control room shift personnel;	O.4.b
IV F.1.iii	Radiological monitoring teams;	O.4.c
IV F.1.iv	Fire control teams (fire brigades);	O.4.d
IV F.1.v	Repair and damage control teams;	O.4.e
IV F.1.vi	First aid and rescue teams;	O.4.f
IV F.1.vii	Medical support personnel;	O.4.h
IV F.1.viii	Licensee's headquarters support personnel;	O.4.i
IV F.1.ix	Security personnel.	O.4.d

Table App 1-1, 10 CFR 50 Appendix E, Cross Reference		
AppE #	**STATEMENT**	**PLAN Section**
IV F.1	In addition, a radiological orientation training program shall be made available to local services personnel; e.g., local emergency services/Civil Defense, local law enforcement personnel, local news media persons.	O.4.g
IV F.2	The plan shall describe provisions for the conduct of emergency preparedness exercises as follows: Exercises shall test the adequacy of timing and content of implementing procedures and methods, test emergency equipment and communications networks, test the public notification system, and ensure that emergency organization personnel are familiar with their duties.	N.1
IV F.2.a	A full participation exercise which tests as much of the licensee, state and local emergency plans as is reasonably achievable without mandatory public participation shall be conducted for each site at which a power reactor is located.	N.1
IV F.2.b	Each licensee at each site shall conduct an exercise of its onsite emergency plan every 2 years. The exercise may be included in the full participation biennial exercise required by paragraph 2.c. of this section. In addition, the licensee shall take actions necessary to ensure that adequate emergency response capabilities are maintained during the interval between biennial exercises by conducting drills, including at least one drill involving a combination of some of the principal functional areas of the licensee's onsite emergency response capabilities.	N.1
IV F.2.c	Offsite plans for each site shall be exercised biennially with full participation by each offsite authority having a role under the plan. Where the offsite authority has a role under a radiological response plan for more than one site, it shall fully participate in one exercise every two years and shall, at least, partially participate in other offsite plan exercises in this period.	N.1
IV F.2.d	A state should fully participate in the ingestion pathway portion of exercises at least once every six years. In States with more than one site, the state should rotate this participation from site to site.	N.1
IV F.2.e	Licensees shall enable any state or local Government located within the plume exposure pathway EPZ to participate in the licensee's drills when requested by such state or local Government.	N.1.b
IV F.2.f	Remedial exercises will be required if the emergency plan is not satisfactorily tested during the biennial exercise, such that NRC, in consultation with FEMA, cannot find reasonable assurance that adequate protective measures can be taken in the event of a radiological emergency. The extent of state and local participation in remedial exercises must be sufficient to show that appropriate corrective measures have been taken regarding the elements of the plan not properly tested in the previous exercises.	N.5
IV F.2.g	All training, including exercises, shall provide for formal critiques in order to identify weak or deficient areas that need correction. Any weaknesses or deficiencies that are identified shall be corrected.	N.4 O.1
IV F.2.h	The participation of state and local governments in an emergency exercise is not required to the extent that the applicant has identified those governments as refusing to participate further in emergency planning activities, pursuant to 10 CFR 50.47(c)(l). In such cases, an exercise shall be held with the applicant or licensee and such governmental entities as elect to participate in the emergency planning process.	N.1.a
IV G	Provisions to be employed to ensure that the emergency plan, its implementing procedures, and emergency equipment and supplies are maintained up to date shall be described.	P
IV H	Criteria to be used to determine when, following an accident, reentry of the facility would be appropriate or when operation could be resumed shall be described.	M

Appendix 2: Procedure Cross-Reference to NUREG-0654

Criteria	Planning Standard	Procedure/Document
NUREG-0654.II.A	Assignment of Responsibility (Organization Control)	{EP-AN-100, Emergency Plan General Response}
NUREG-0654.II.B	Onsite Emergency Organization	{EP-AN-200, Control Room Emergency Response}
		{EP-AN-210, TSC Activation and Operation}
		{EP-AN-220, OSC Activation and Operation}
		{EP-AN-230, EOF Activation and Operation}
		{EP-AN-240, JIC Activation and Operation}
NUREG-0654.II.C	Emergency Response Support and Resources	Details provided in {EP-AN-2xx series, facility procedures.}
NUREG-0654.II.D	Emergency Classification System	{EP-AN-300, Emergency Classification}
NUREG-0654.II.E	Notification Methods and Procedures	{EP-AN-400, Emergency Notifications}
NUREG-0654.II.F	Emergency Communications	Details provided in {EP-AN-2xx series, facility procedures.}
NUREG-0654.II.G	Public Education and Information	{EP-AN-901, Emergency Plan Public Information Program}
NUREG-0654.II.H	Emergency Facilities and Equipment	{EP-AN-700, Emergency Plan Equipment Operation}
		{EP-AN-903, Maintenance of Emergency Response Facilities.}
		{EP-AN-906, Siren Maintenance and Testing}
NUREG-0654.II.I	Accident Assessment	{EP-AN-500, Core Damage Assessment}
		{EP-AN-510, Dose Assessment}
		Position specific details provided in {EP-AN-2xx series, facility procedures. }
NUREG-0654.II.J	Protective Response	{EP-AN-600, Protective Action Recommendations}
		{EP-AN-610, Onsite Protective Actions}
NUREG-0654.II.K	Radiological Exposure Control	{EP-AN-620, Emergency Exposure Controls}
NUREG-0654.II.L	Medical and Public Health Support	{EP-AN-630, Health Physics Hospital Assistance}
NUREG-0654.II.M	Recovery and Reentry Planning and Post-Accident Operations	{EP-AN-800, Reentry and Recovery}

Criteria	Planning Standard	Procedure/Document
NUREG-0654.II.N	Exercises and Drills	{EP-AN-905, Exercises, Tests and Drills}
NUREG-0654.II.O	Radiological Emergency Response Training	{EP-AN-904, Emergency Response Training}
NUREG-0654.II.P	Responsibility for the Planning Effort: Development, Periodic Review and Distribution of Emergency Plans	{EP-AN-900, Emergency Preparedness Administration}
		{EP-AN-902, Maintenance of Emergency Plan Records}
		{EP-AN-907, Emergency Plan Performance Indicators}

Appendix 3: Letters of Agreements (Certification Letters)

Letters of agreement (Certification Letters) have been established with the following support organizations:

1. {Calvert County Volunteer Fire & Rescue Association
2. Calvert Memorial Hospital
3. Attending Physicians
4. Delaware Geological Survey, University of Delaware
5. St. Leonard Volunteer Fire Department and Rescue Squad
6. Solomon's Island Fire and Rescue
7. Calvert County Sheriff's Office
8. Maryland State Police}
9. Memorandum of Understanding Regarding Communications Between Cove Point LNG Plant and {Calvert Cliffs Nuclear Power Plant}

Appendix 4: Glossary of Terms and Acronyms

Accident Assessment	Accident assessment consists of a variety of actions taken to determine the nature, effects and severity of an accident and includes evaluation of reactor operator status reports, damage assessment reports, meteorological observations, seismic observations, fire reports, radiological dose projections, in plant radiological monitoring, and environmental monitoring.
Activation	(1) {"ERO Activation" is the process of initiating actions to notify and mobilize Emergency Response Organization (ERO) personnel following an event classification under the emergency plan.} (2) {"Facility Activation" refers to the decision to consider a facility fully operational based on the minimum staffing required under Table B-1 of the emergency plan and the ability of facility staffing and equipment to perform its designed function(s)}.
Annual	{Frequency of occurrence equal to once per calendar year, January 1 to December 31}.
Assembly/Accountability	A procedural or discretionary protective action taken for all persons within the security "Protected Area", which involves the gathering of personnel into pre-designated areas, and the subsequent verification that the location of these personnel is known.
Assessment Actions	Those actions taken during or after an emergency to obtain and process information that is necessary to make decisions to implement specific emergency measures.
Biennial	Frequency of occurrence equal to once per two calendar year periods.
Biennial Exercise	An event that tests the integrated capability and a major portion of the basic elements existing within an emergency plan. An exercise usually involves participation of personnel from {State} and local governments, licensee personnel, and may involve participation of Federal government personnel.

Appendix 4: Glossary of Terms and Acronyms

Classification	The classification of emergencies is divided into Five (5) categories or conditions, covering the postulated spectrum of emergency situations. The first four (4) emergency classifications are characterized by Emergency Action Levels (EALs) or event initiating conditions and address emergencies of increasing severity. The fifth, the Recovery classification, is unique in that it may be viewed as a phase of the emergency, requiring specific criteria to be met and/or considered prior to its declaration.
Command and Control	When in Command and Control, the designated Emergency Response Facility (ERF) has overall responsibility for the Licensee's emergency response efforts, including the non-delegable responsibilities of Command and Control.
Committed Dose Equivalent (CDE)	The Dose Equivalent to organs or tissues of reference that will be received from an intake of radioactive material by an individual during the 50-year period following the intake.
Corrective Action	Those emergency measures taken to lessen or terminate an emergency situation at or near the source of the problem, to prevent an uncontrolled release of radioactive material, or to reduce the magnitude of a release. Corrective actions include, equipment repair or shutdown, installation of emergency structures, fire fighting, repair, and damage control.
Damage Assessment	Estimates and descriptions of the nature and extent of damages resulting from an emergency or disaster; of actions that can be taken to prevent or mitigate further damage; and of assistance required in response and recovery efforts based on actual observations by qualified engineers and inspectors.
Decontamination	The reduction or removal of contaminated radioactive material from a structure, area, material, object, or person. Decontamination may be accomplished by (1) treating the surface so as to remove or decrease the contamination; (2) letting the material stand so that the radioactivity is decreased as a result of natural decay; and (3) covering the contamination.

Appendix 4: Glossary of Terms and Acronyms

Dedicated Communications	A communications link between two or more locations, access to which is limited to designated locations, and used only for the purpose intended. The communications link may be either telephone or radio.
Deep Dose Equivalent (DDE)	The dose equivalent at a tissue depth of 1 cm (1000 mg/cm^2); applies to external whole body exposure.
Dose	A generic term that means absorbed dose, dose equivalent, effective dose equivalent, deep dose equivalent, committed dose equivalent, committed effective dose equivalent, or total effective dose equivalent.
Dose Equivalent (DE)	The product of the absorbed dose in tissue, quality factor, and all other necessary modifying factors at the location of interest. The unit of dose equivalent is the Rem (Sv).
Dose Projection	The calculated estimate of a radiation dose to individuals at a given location (normally off-site), determined from the source term/quantity of radioactive material (Q) released, and the appropriate meteorological dispersion parameters (X/Q).
Dose Rate	The amount of ionizing (or nuclear) radiation to which an individual would be exposed per unit of time. As it would apply to dose rate to a person, it is usually expressed as rems per hour or in submultiples of this unit, such as millirems per hour. The dose rate is commonly used to indicate the level of radioactivity in a contaminated area.
Dosimeter	An instrument such as a thermoluminescent dosimeter (TLD), self-reading pocket dosimeter (SRPD), or electronic dosimeter (ED) for measuring, registering, or evaluating total accumulated dose or exposure to ionizing radiation.
Drill	A supervised instruction period aimed at testing, developing and maintaining skills in a particular operation.
Early Phase	The period at the beginning of a nuclear incident when immediate decisions for effective use of protective actions are required and must be based primarily on predictions of radiological conditions in the environment. This phase may last from hours to days. For the purposes of dose projections it is assumed to last four days.

Appendix 4: Glossary of Terms and Acronyms

Emergency Action Levels (EALs)	A pre-determined, site-specific, observable threshold for a plant Initiating Condition that places the plant in a given emergency class. An EAL can be an instrument reading; an equipment status indicator; a measurable parameter (onsite or offsite); a discrete, observable event; or another phenomenon which, if it occurs, indicates entry into a particular emergency class.
Emergency Alert System (EAS)	A network of broadcast stations and interconnecting facilities which have been authorized by the Federal Communications Commission to operate in a controlled manner during a war, state of public peril or disaster, or other national or local emergency. In the event of a nuclear reactor accident, instructions/notifications to the public on conditions or protective actions would be broadcast by {state} or local government authorities on the EAS.
{Emergency Director}	The Director of the facility in Command and Control. One of the following: the {Interim Emergency Director} (Control Room), {Emergency Plant Manager} (TSC) or the {Emergency Director} (EOF).
Emergency Notification System (ENS)	The NRC Emergency Notification System hot line is a dedicated telephone system that connects the plant with NRC headquarters in White Flint, Maryland. It is directly used for reporting emergency conditions to NRC personnel.
Emergency Operating Procedures (EOPs)	EOPs are step-by-step procedures for direct actions taken by licensed reactor operators to mitigate and/or correct an off normal plant condition through the control of plant systems.
Emergency Operations Center (EOC)	A facility designed and equipped for effective coordination and control of emergency operations carried out within an organization's jurisdiction. The site from which civil government officials (municipal, local, {State}, and Federal) exercise direction and control in a civil defense emergency.
Emergency Operations Facility (EOF)	An emergency response facility designed and equipped for effective communication, coordination and control of emergency operations carried out by the Site and communicated to the offsite emergency response organizations.

Appendix 4: Glossary of Terms and Acronyms

Emergency Personnel	Those organizational groups that perform a functional role during an emergency condition. Within the Licensee, emergency personnel include the Managers and Directors of the Emergency Response Organization, accident assessment personnel, radiological monitoring teams, fire brigades, first aid teams and security personnel.
Emergency Planning Zones (EPZ)	That area surrounding a nuclear station in which emergency planning is conducted for the protection of the public. With respect to protecting the public from the plume exposure resulting from an incident, the EPZ is usually an area with a radius of about 10 miles (16 kilometers) surrounding the facility. With respect to the ingestion exposure pathway, the EPZ is usually an area with a radius of about 50 miles (80 kilometers).
Emergency Preparedness	A state of readiness that provides reasonable assurance that adequate protective measures can and will be taken upon implementation of the emergency plan in the event of a radiological emergency.
Emergency Response Data System (ERDS)	ERDS is a direct near real-time electronic data link between the licensee's onsite computer system and the NRC Operations Center that provides for the automated transmission of a limited data set of selected parameters.
Environmental Monitoring	The use of radiological instruments or sample collecting devices to measure and assess background radiation levels and/or the extent and magnitude of radiological contamination in the environment around the plant. This may be done in various stages such as pre-operational, operational, emergency, and post operational.
Essential Personnel	Essential personnel are those needed to achieve the goals and tasks as deemed necessary by the {Emergency Plant Manager}.
Evacuation	The urgent removal of people from an area to avoid or reduce high level, short-term exposure usually from the plume or from deposited activity.

Appendix 4: Glossary of Terms and Acronyms

Exclusion Area	An Exclusion Area is an area specified for the purpose of reactor site evaluation in accordance with 10 CFR 100. It is an area of such size that an individual located at any point on its boundary for two hours immediately following onset of the postulated release would not receive a total radiation dose to the whole body in excess of 25 rem (0.25 Sv) or a total radiation dose of 300 rem (3 Sv) to the thyroid from iodine exposure.
Exercise	An event that tests the integrated capability of a major portion of the basic elements existing within emergency preparedness plans and organizations.
Exercise Cycle	A six-year period of time.
Fission Product Barrier	The fuel cladding, reactor coolant system boundary, or the containment boundary.
Hazardous Material	A substance or material which has been determined by the United States Secretary of Transportation to be capable of posing an unreasonable risk to health, safety, and property when transported in commerce, and which has been so designated in 49 CFR 172.
Health Physics Network (HPN) Line	In the event of a Site Area Emergency, the NRC HPN line will be activated by the NRC Operations center in White Flint, Maryland. This phone is part of a network that includes the NRC Regional Office and the NRC Operations Headquarters in White Flint, Maryland. This system is dedicated to the transmittal of radiological information by plant personnel to NRC Operations Center and the Regional office. HPN phones are located in the TSC and EOF.
Imminent	Mitigation actions have been ineffective and trended information indicates that the event or condition will occur {within 2 hours}.
Ingestion Exposure Pathway	The potential pathway of radioactive materials to the public through consumption of radiologically contaminated water and foods such as milk or fresh vegetables. Around a nuclear power plant this is usually described in connection with the 50-mile (80-kilometer) radius Emergency Planning Zone (50 mile (80-kilometer) EPZ).

Appendix 4: Glossary of Terms and Acronyms

Initiating Condition	A predetermined Unit condition where either the potential exists for a radiological emergency or such an emergency has occurred.
Intermediate Phase	The period beginning after the source and releases have been brought under control and reliable environmental measurements are available for use as a basis for decisions on additional protective actions.
Joint Information Center	An Emergency Response Facility activated by the Licensee and staffed by Licensee, {State}, and Federal Public Information personnel. This facility serves as the single point of contact for the media and public to obtain information about an emergency.
Late Phase	The period beginning when recovery action designed to reduce radiation levels in the environment to acceptable levels for unrestricted use are commenced and ending when all recovery actions have been completed. This period may extend from months to years (also referred to as the recovery phase).
Local Evacuation	The evacuation of personnel from a particular area, such as a room or building.
Main Control Room	The operations center of a nuclear power plant from which the plant can be monitored and controlled.
Monthly	Frequency of occurrence equal to once per calendar month.
Non-Essential Site Personnel	Those personnel not needed for the continuing existence or functioning of the ERO. They are personnel not required to fill certain positions in the ERO. Identification of non-essential personnel is circumstance-oriented as determined by the {Emergency Plant Manager}.

Appendix 4: Glossary of Terms and Acronyms

Notification, Public	Public notification means to communicate instructions on the nature of an incident that prompted the public alerting/warning and on protective or precautionary actions that should be taken by the recipients of the alert. A {state} and local government process for providing information promptly to the public over radio and TV at the time of activating the alerting (warning) signal (sirens). Initial notifications of the public might include instructions to stay inside, close windows, and doors, and listen to radio and TV for further instructions. Commercial broadcast messages are the primary means for advising the general public of the conditions of any nuclear accident. (See Emergency Alert System.)
Off-Site	The area around a nuclear generating station that lies outside the station's "site boundary”.
Offsite Dose Calculation Manual (ODCM)	The ODCM presents a discussion of the following: 1. The ways in which nuclear power plants can affect their environment radiologically 2. The regulations which limit radiological effluents from the nuclear power plants; and 3. The methodology used by the nuclear power plants to assess radiological impact on the environment and compliance with regulations.
On-Site	The area around a nuclear generating plant that lies within the plant's "site boundary”.
Owner Controlled Area	Company owned property on which a Nuclear Station is located and may include Licensee leased lands adjacent to that Nuclear Station.
Operations Support Center (OSC)	An emergency response facility at the Plant to which support personnel report and stand by for deployment in an emergency situation.
Personnel Monitoring	The determination of the degree of radioactive contamination on individuals, using standard survey meters, and/or the determination of dosage received by means of dosimetry devices.

Appendix 4: Glossary of Terms and Acronyms

Puff Release	A controlled containment vent that will be terminated prior to exceeding 60 minutes in duration **AND** exceeds either the EPA-400 TEDE or CDE Thyroid PAG.
Plume Exposure Pathway	The potential pathway of radioactive materials to the public through: (a) whole body external exposure from the plume and from deposited materials, and (b) inhalation of radioactive materials.
Population-at-Risk	Those persons for whom protective actions are being or would be taken. In the 10-mile (16-kilometer) EPZ the population-at-risk consists of resident population, transient population, special facility population, and industrial population.
Potassium Iodide	(Symbol KI) A chemical compound that readily enters the thyroid gland when ingested. If taken in a sufficient quantity prior to exposure to radioactive iodine, it can prevent the thyroid from absorbing any of the potentially harmful radioactive iodine-131.
Potential	Mitigation actions are not effective and trended information indicates that the parameters are outside desirable bands and not stable or improving.
Projected Dose	That calculated dose that some individuals in the population group may receive if no protective actions are implemented. Projected doses are calculated to establish an upper limit boundary.
Protected Area	That onsite area within the security boundary as defined in each site's Security Plan.
Protection Factor (PF)	The relation between the amount of radiation that would be received by a completely unprotected person compared to the amount that would be received by a protected person such as a person in a shielded area. PF = Unshielded dose rate X shielded dose rate.
Protective Action	Those emergency measures taken for the purpose of preventing or minimizing radiological exposures to affected population groups.

Appendix 4: Glossary of Terms and Acronyms

Protective Action Guide (PAG)	Projected radiological dose values to individuals in the general population that warrant protective action. Protective Action Guides are criteria used to determine if the general population needs protective action regarding projected radiological doses, or from actual committed (measured) dose values.
Protective Action Recommendations (PARs)	Recommended actions to the States for the protection of the offsite public from whole body external gamma radiation, and inhalation and ingestion of radioactive materials. The PAR issued may be to evacuate or shelter-in-place. Access control and other recommendations concerning the safeguards of affected food chain processes may be issued by the States as PARs.
Public Alerting/Warning	The process of signaling the public, as with sirens, to turn on their TV's or radios and listen for information or instructions broadcast by {state} or local government authorities on the Emergency Alert System (EAS).
Quarterly	Frequency of occurrence equal to once in each of the following four periods: January 1 through March 31; April 1 through June 30; July 1 through September 30; October 1 through December 31.
Recovery	The process of reducing radiation exposure rates and concentrations of radioactive material in the environment to levels acceptable for unconditional occupancy or use.
Release	{A 'Release in Progress' is defined as ANY radioactive release that is a result of, or associated with, the emergency event.}
Restricted Area	Any area, access to which is controlled by {Calvert Cliffs Nuclear Power Plant Unit 3} for purposes of protection of individuals from exposure to radiation and radioactive materials.
Safety Analysis Report, Final (FSAR)	The FSAR is a comprehensive report that the licensee is required to submit to the NRC as a prerequisite and as part of the application for an operating license for a nuclear power plant. The multi-volume report contains detailed information on the plant's design and operation, with emphasis on safety-related matters.

Appendix 4: Glossary of Terms and Acronyms

Semi-Annual	Frequency of occurrence equal to once in each of the following periods: January 1 through June 30; July 1 through December 31.
Shielding	Any material or barrier that attenuates (stops or reduces the intensity of) radiation.
Site Boundary	The Nuclear Plants Site Boundary is described in detail in the ODCM.
Site Evacuation	The evacuation of non-essential personnel from the plant site.
Source Term	Radioisotope inventory of the reactor core, or amount of radioisotope released to the environment, often as a function of time.
Technical Support Center (TSC)	An emergency response facility outside of the Control Room in which information is supplied on the status of the plant to those individuals who are knowledgeable or responsible for engineering and management support of reactor operations in the event of an emergency, and to those persons who are responsible for management of the on-site emergency response.
Threshold Value	Measurable, observable detailed conditions which must be satisfied to determine an EAL applicability.
Thyroid Blocking Agent	An agent which when properly administered to an individual will result in sufficient accumulation of stable iodine in the thyroid to prevent significant uptake of radioiodine. Potassium Iodide is such an agent.
Total Effective Dose Equivalent (TEDE)	The sum of the deep dose equivalent (for external exposure) and the committed effective dose equivalent (for internal exposure) and – for offsite dose projections - 4 days of deposition exposure.
Unrestricted Area	Any area to which access is not controlled by the licensee for protecting individuals from exposure to radiation and radioactive materials, and any area used for residential quarters.

Appendix 4: Glossary of Terms and Acronyms

Safety Analysis Report, Updated (UFSAR)	The UFSAR is a comprehensive report that the licensee is required to submit to the NRC as part of the application for an operating license for a nuclear power plant. The multi-volume report contains detailed information on the plant's design and operation, with emphasis on safety-related matters. The UFSAR contains updated information to the FSAR.
Vital Areas	{Areas within the site security fence which contain vital equipment.}
Vital Equipment	{Any equipment, system, device or material, the failure, destruction, or release of which could directly or indirectly endanger the public health and safety by exposure to radiation. Equipment or systems which would be required to function to protect public health and safety following such failure, destruction, or release are also considered to be vital.}
Weekly	Frequency occurrence equal to once per calendar week: Sunday through Saturday.

Appendix 4: Glossary of Terms and Acronyms

Note: Any abbreviation followed by a lower case 's' denotes the plural form of the term.

ac ..... alternating current

ALARA ..... as low as reasonably achievable

ANI ..... American Nuclear Insurers

ANSI ..... American National Standards Institute

ARM ..... Area Radiation Monitor

ASLB ..... Atomic Safety Licensing Board

BWR ..... boiling water reactor

CB ..... citizen band

cc ..... cubic centimeter

CEOC ..... County Emergency Operation Center

CFR ..... Code of Federal Regulations

CHRMS ..... Containment High Range Monitoring System

cm^2 ..... square centimeter

CR ..... Control Room

Cs ..... Cesium

dc ..... direct current

DEQ ..... Department of Environmental Quality

DHFS ..... Department of Health and Family Services

DHS ..... Department of Homeland Security

DOE ..... U. S. Department of Energy

DOT ..... U. S. Department of Transportation

DPH ..... Department of Public Health

DHS ..... Department of Homeland Security

dpm ..... disintegration per minute

EAL ..... Emergency Action Level

Appendix 4: Glossary of Terms and Acronyms

EAS ..... Emergency Alerting System

EMA ..... Emergency Management Agency

ENS ..... Emergency Notification System (NRC)

EOC ..... Emergency Operations (or Operating) Center

EOF ..... Emergency Operations Facility

EOP ..... Emergency Operating Procedure

EPA ..... U. S. Environmental Protection Agency

EPDS ..... Emergency Preparedness Data System

EPZ ..... Emergency Planning Zone

ERF ..... Emergency Response Facility

ESF ..... Engineered Safety Feature

FEMA ..... Federal Emergency Management Agency

FRERP ..... Federal Radiological Emergency Response Plan

FRMAP ..... Federal Radiological Monitoring and Assessment Plan

FRPCC ..... Federal Radiological Preparedness Coordinating Committee

FSAR ..... Final Safety Analysis Report

Ge ..... Germanium

GET ..... General Employee Training

HEPA ..... high efficiency particulate air

HPN ..... Health Physics Network (NRC)

hr ..... hour

I ..... Iodine

IRAP ..... Interagency Radiological Assistance Plan

Appendix 4: Glossary of Terms and Acronyms

INPO ..... Institute of Nuclear Power Operations

JIC ..... Joint Information Center

LGEOC ..... Local Government Emergency Operations Center

Li ..... Lithium

LOCA ..... Loss of Coolant Accident

MAELU ..... Mutual Atomic Energy Liability Underwriters

{MEMA ..... Maryland Emergency Management Agency}

{MDE ..... Maryland Department of Environment}

MCP ..... Municipal Command Post

mR ..... milliroentgen

NCRP ..... National Council on Radiation Protection

NOP ..... Nuclear Organization Procedure

NRC ..... U. S. Nuclear Regulatory Commission

NRP ..... National Response Plan

OSC ..... Operations Support Center

PAG ..... Protective Action Guide

PANS ..... Public Alert and Notification System

PAR ..... Protective Action Recommendation

PASS ..... Post Accident Sampling System

QAPD ..... Quality Assurance Program Description

R ..... roentgen

RAC ..... Regional Advisory Committee (FEMA)

RAP ..... Radiological Assistance Plan

Appendix 4: Glossary of Terms and Acronyms

REAC .....Radiological Emergency Assessment Center

REP .....Radiological Emergency Plan

SAMG.....Severe Accident Management Guidelines

SCBA ..... self contained breathing apparatus

SEOC .....State Emergency Operations Center

SFCP..... State Forward Command Post

SHL ..... State Hygienic Laboratory

SPCC ..... Spill Prevention Control and Countermeasure

SPDS .....Safety Parameter Display System

Sr.....Strontium

Sv ..... Sievert

STA .....Shift Technical Advisor

TDD.....Telecommunications Device for the Deaf

TLD .....Thermoluminescent Dosimeter

TSC .....Technical Support Center

µCi.....microcurie

UFSAR .....Updated Final Safety Analysis Report

Appendix 5: Evacuation Time Estimates

{~~The results of the~~Evacuation time estimates are described in the "Calvert Cliffs Nuclear Power Plant Development of Evacuation Time Estimates, Final Report, dated April 2008, and the Addendum to Calvert Cliffs Nuclear Power Plant Development of Evacuation Time Estimates, Revision 0, dated August 2008.}

The results ~~is~~ are provided separately in Part 5 of the COL Application.~~}~~