3.0 PLANT DESCRIPTION

© 2007 UniStar Nuclear Services, LLC. All rights reserved.
COPYRIGHT PROTECTED

3.1 EXTERNAL APPEARANCE AND PLANT LAYOUT

The site for the proposed nuclear power plant is the 2070 acre (838 hectares) Calvert Cliffs Nuclear Power Plant (CCNPP) property located on the western shore of the Chesapeake Bay in Lusby, Maryland. The terrain is flat to gently rolling with low to moderate relief as shown in Figure 3.1-1. Ground surface elevations range from mean sea level (msl) to approximately 130 ft (39.7 m), with an average elevation of approximately 100 ft (30.5 m). Nearly vertical cliffs, over 100 ft (30.5 m) high in places are located along the shoreline. References to elevation values in this section are based on National Geodetic Vertical Datum of 1929 (NGVD, 29), unless otherwise stated.

The CCNPP property contains two existing pressurized water reactors (PWRs) designated as CCNPP Units 1 and 2. Existing plant structures occupy approximately 220 acres (89.0 hectares), with most of the power block structures located near the east edge of the site, about at the center of the 10,000 ft (3,048.0 m) long CCNPP site shoreline. CCNPP Units 1 and 2 share a Turbine Building and other support structures. The Turbine Building is oriented parallel and adjacent to the shoreline of the Chesapeake Bay. The two Reactor Buildings and associated Auxiliary Buildings are located west of the Turbine Building. The Service Building, Intake Structure and Discharge Structure are located east of the Turbine Building. An Independent Spent Fuel Storage Installation is located near the center of the property, west of the existing switchyard, which is west of the Reactor Buildings. A former summer camp, Camp Conoy, is located on the property south of existing plant structures. The remainder of the property is mostly densely wooded areas. Access to the existing plant is via an onsite road which intersects the Maryland State Highway 2/4 (MD 2/4) west of the site, or by barge via the Chesapeake Bay.

The proposed plant is a U.S. Evolutionary Power Reactor (EPR), referred to as CCNPP Unit 3. The U.S. EPR is a pressurized water reactor design with a rated core thermal power of 4,590 MWt. The rated and design gross electrical output for the EPR is approximately 1,710 MWe. Electrical power consumption is approximately 130 MWe for auxiliary loads, plus another 18 MWe for the cooling tower fans, resulting in a rated and design net electrical output of approximately 1,562 MWe. The plant is proposed to be constructed south of the existing CCNPP Units 1 and 2, in the vicinity of Camp Conoy. Construction related and new plant structures will occupy approximately ~~420~~460 acres (~~170~~186 hectares). New plant structures will occupy approximately ~~281~~320 acres (~~113.7~~129 hectares) of the CCNPP site. CCNPP Unit 3 will be separated from CCNPP Units 1 and 2 by a distance of approximately 2,500 ft (762.0 m). The CCNPP Unit 3 Reactor Turbine Buildings will be located farther inland than Units 1 and 2 and is at least 1,000 ft (304.8 m) from the shoreline.

Due to the distance and location from CCNPP Units 1 and 2, CCNPP Unit 3 will have a separate protected area and plant access road. The plant access road will connect to the highway to the west and will be built south of the existing CCNPP Units 1 and 2 plant access road. The existing barge slip/heavy haul road will be extended to accommodate CCNPP Unit 3.

The CCNPP Unit 3 design is a four-loop, pressurized water reactor, with a Reactor Coolant System composed of a reactor pressure vessel that contains the fuel assemblies, a pressurizer including ancillary systems to maintain system pressure, one reactor coolant pump per loop, one steam generator per loop, associated piping, and related control systems and protection systems. The CCNPP Unit 3 Reactor Building and Turbine Building will be oriented side by side, with the Reactor Building oriented towards the east.

The Reactor Building will be surrounded by the Fuel Pool Building, four Safeguard Buildings, two Emergency Diesel Generator Buildings, the Reactor Auxiliary Building, the Radioactive Waste Processing Building and the Access Building. Figure 3.1-1 shows the layout for CCNPP

© 2007 UniStar Nuclear Services, LLC. All rights reserved.
COPYRIGHT PROTECTED

Unit 3, depicting the following features: exclusion area boundary (EAB), site boundary, liquid and gaseous release points (i.e., discharge piping, and vent stack and ESWS Cooling Towers and CWS Cooling Tower, respectively) and their elevations and distances from the Reactor Building, meteorological towers, the construction zone, land to be cleared, waste disposal areas, and other buildings and structures both temporary (i.e., construction offices/ warehouses) and permanent.

~~The CCNPP Units 1 and 2 Reactor Buildings are a vertical cylinder, concrete structure with a dome and flat base, measuring approximately 137.5 ft (41.91 m) in diameter with an overall height of about 195 ft (59.4 m). With the existing plant grade at an elevation of approximately 45 ft (13.7 m) and the top of the Reactor Buildings at an elevation of approximately 193.4 ft (58.95 m), each Reactor Building rises about 148.5 ft (45.26 m) above grade. Other existing plant buildings are either concrete or steel with exterior metal siding.~~

The CCNPP Unit 3 Reactor Building is an upright cylinder concrete structure, capped with a spherical dome. The Reactor Building is 186 ft (56.7 m) in diameter with an overall height of ~~230~~244 ft (~~70.1~~74.3 m). The plant grade for CCNPP Unit 3 will be at an elevation of approximately 85 ft (25.9 m). With the bottom of the Reactor Building foundation 40 ft (12.2 m) below grade (approximately at elevation 44 ft. msl), the new Reactor Building will rise ~~190~~204 ft (~~57.9~~62.2 m) above grade. The top of the Reactor Building will be at an elevation of approximately ~~275~~289 ft (~~83.8~~88.1 m).

The vent stack for CCNPP Unit 3 will be the tallest new structure at approximately ~~197~~211 ft (~~60.0~~64 m) above grade or about 7 ft (2.1 m) above the Reactor Building. In contrast to CCNPP Units 1 and 2, which uses a once-through cooling system, CCNPP Unit 3 will have a closed-loop cooling system cooling system. The CCNPP Unit 3 Cooling Tower will be a round concrete structure with an overall diameter of 528 ft (161 m) and approximate height of 164 ft (50.0 m). Similar to CCNPP Units 1 and 2 , other CCNPP Unit 3 buildings will be concrete or steel with metal siding. Figure 3.1-2 depicts an aerial view of CCNPP Units 1 and 2 with the proposed CCNPP Unit 3 superimposed on the photograph.

The CCNPP Unit 3 ultimate heat sink (UHS) function will be provided by four mechanical forced draft Essential Service Water System (ESWS) cooling towers situated above storage basin pools. Each of the four pools will be approximately 0.19 acres (0.08 hectares) in size and will not occupy significant land area beyond the tower footprint. The pools will normally be supplied with makeup water from the non-safety-related CCNPP Unit 3 desalination plant.

In the event of a design basis accident, the pools will be supplied with water from a safety-related makeup water system using Chesapeake Bay water. The ESWS cooling towers will be 96 ft (29 m) tall. The desalination plant footprint will be approximately 65 ft by 165 ft (20 m x 50 m) and situated adjacent to the east of the Circulating Water Supply System Cooling Tower. Bay water to the Desalination Plant will be taken from the Circulating Water Supply System makeup line to the Cooling Tower.

Figures 3.1-3 through 3.1-5 are ground-level photographs of the CCNPP property taken from adjacent properties to the north, south and west. Major structures associated with CCNPP Unit 3 have been superimposed on these photographs to depict potential visual impacts as viewed from Calvert County Flag Ponds Nature Park to the north, Calvert Cliffs State Park to the south, and from Maryland State Highway 2/4 and residential properties to the west.

Due to heavily forested onsite areas, screening is provided by trees so that only the tops of the taller structures may be visible from adjacent properties at ground level. Due to the hybrid

© 2007 UniStar Nuclear Services, LLC. All rights reserved.
COPYRIGHT PROTECTED

design of the CWS cooling tower, no water vapor plume will be visible. Many of the CCNPP Unit 3 buildings will not be visible since the taller structures will mask the lower rise structures. Due to onsite elevation changes, topographical features such as hills and valleys will also help to screen and seclude plant structures from surrounding properties even when foliage is seasonally absent. In addition, since CCNPP Unit 3 will be located approximately 3,000 ft to 4,000 ft (914.4 m to 1,219.2 m) from the nearest residential properties, distance will help shield the plant from view.

From the east, considering that the approximate 2 mi (3.2 km) long shoreline bordering the CCNPP property comprises steep cliffs with little beach area, views of the new plant from the shoreline should be limited due to elevation differences between the Chesapeake Bay and land, and the forested, 1,000 ft (304.8 m) setback. The Intake Structure and Pump House, and associated discharge piping at the shoreline for CCNPP Unit 3 should also have minimal visual impact considering the proposed locations near the CCNPP Units 1 and 2 intake structure and barge slip facility, respectively. No other visual impacts from nearby ground level vantage points are expected.

Aesthetic principles and concepts used in the design and layout of CCNPP Unit 3 include the following:

- Woodlands on site have been avoided as much as possible.
- Developing land zoned for industrial use for portions of the construction and operation of the new plant to minimize the development of land zoned as Farm and Forest District.
- Selecting the southern portion of the CCNPP property, where natural valleys exist, for the location of the new power block structures. This area will provide a low profile for the new plant and should require less excavation for site preparation and clearing due to pre-existing, cleared areas around Camp Conoy.
- Utilizing a hybrid cooling tower with a plume abatement system to minimize visible vapor plume.
- Locating most of the plant structures beyond the 1,000 ft (304.8 m) Chesapeake Bay Critical Area (CBCA) although security perimeter fencing, gravel path, water intake and discharge structures, and heavy haul road and construction staging area will be constructed in the CBCA.
- Placing the Intake Structure and Pump House and associated discharge piping in the existing, developed section of shoreline.
- Constructing buildings similar in shape, size and material to existing buildings.
- Utilizing cooling systems that minimize visual impacts.
- Minimizing tree removal by locating the , construction lay-down areas, parking areas and construction offices and warehouses in pre-existingdredge spoil areas, cleared fields or lightly forested areas, where practical.
- Transporting excavated and dredged material to an onsite spoils area outside designated wetlands.

© 2007 UniStar Nuclear Services, LLC. All rights reserved.
COPYRIGHT PROTECTED

- Upgrading existing onsite roads as applicable to minimize the addition of new roads. However, proposed new roads will provide direct routes to CCNPP Unit 3 for construction andare necessary to minimize disruption of CCNPP Units 1 and 2 traffic patterns.

In addition to the above, exterior finishes for plant buildings will be similar in color and texture to those of the CCNPP Units 1 and 2 buildings. This provides for a consistent, overall appearance, by architecturally integrating the buildings on the CCNPP site. Areas that are cleared supporting construction activities will be either maintained or restored by reseeding and replanting with native trees and vegetation, so that the CCNPP Unit 3 landscape blends with the CCNPP Units 1 and 2 landscapes and the remaining undisturbed areas on the CCNPP site. Figure 3.1-6 is an architectural rendering of CCNPP Unit 3 , depicting profiles of major buildings and landscaping features.

© 2007 UniStar Nuclear Services, LLC. All rights reserved.
COPYRIGHT PROTECTED

Figure 3.1-1—~~CCNPP~~ Site Area ~~Topographical~~ Topography Map

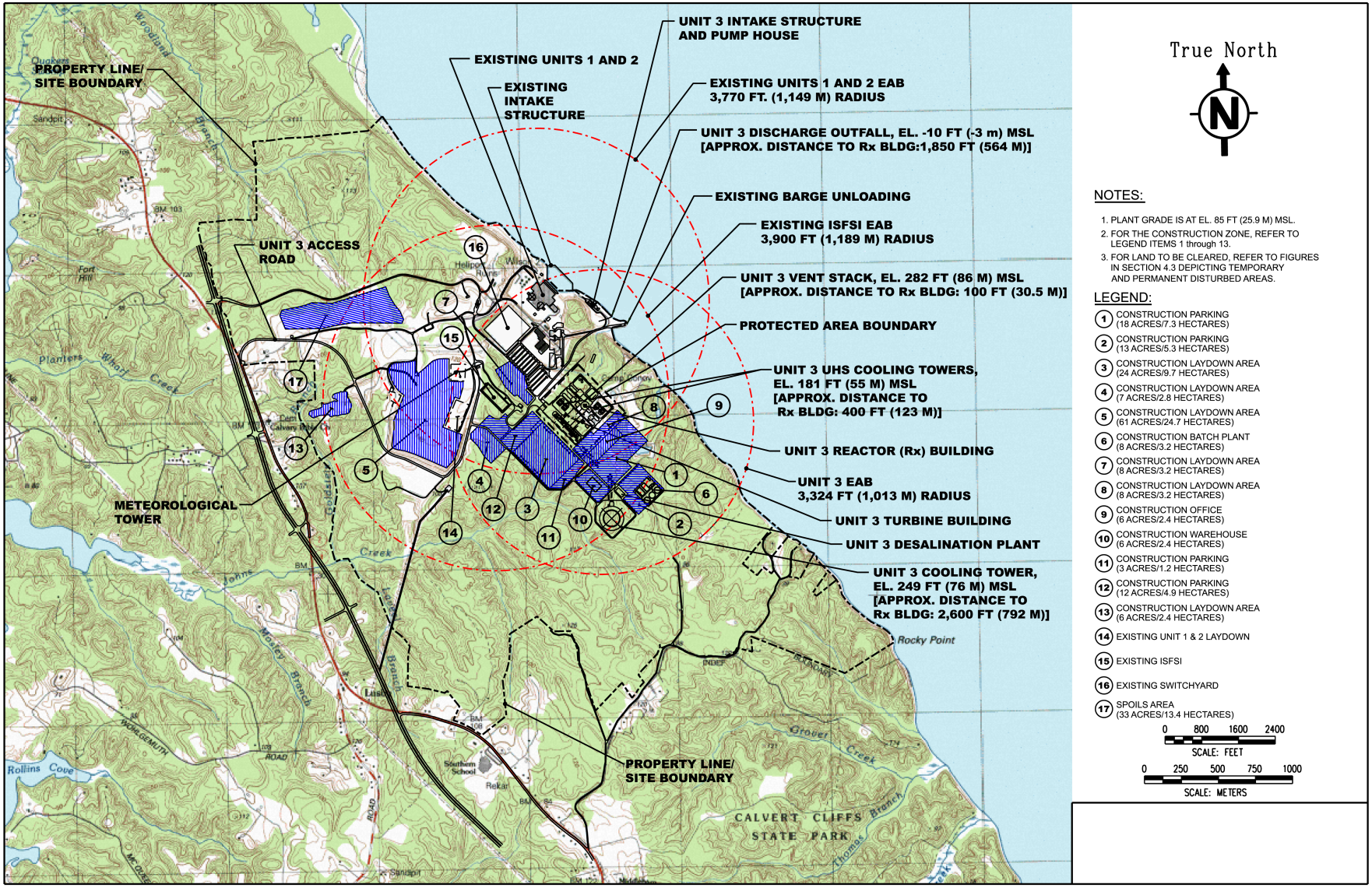

© 2007 UniStar Nuclear Services, LLC. All rights reserved.
COPYRIGHT PROTECTED

Figure 3.1-2—Aerial View of CCNPP Units 1 and 2 with CCNPP Unit 3 Superimposed

© 2007 UniStar Nuclear Services, LLC. All rights reserved.
COPYRIGHT PROTECTED

Figure 3.1-3—Ground Level View Looking South with CCNPP Unit 3 Structures Superimposed

© 2007 UniStar Nuclear Services, LLC. All rights reserved.
COPYRIGHT PROTECTED

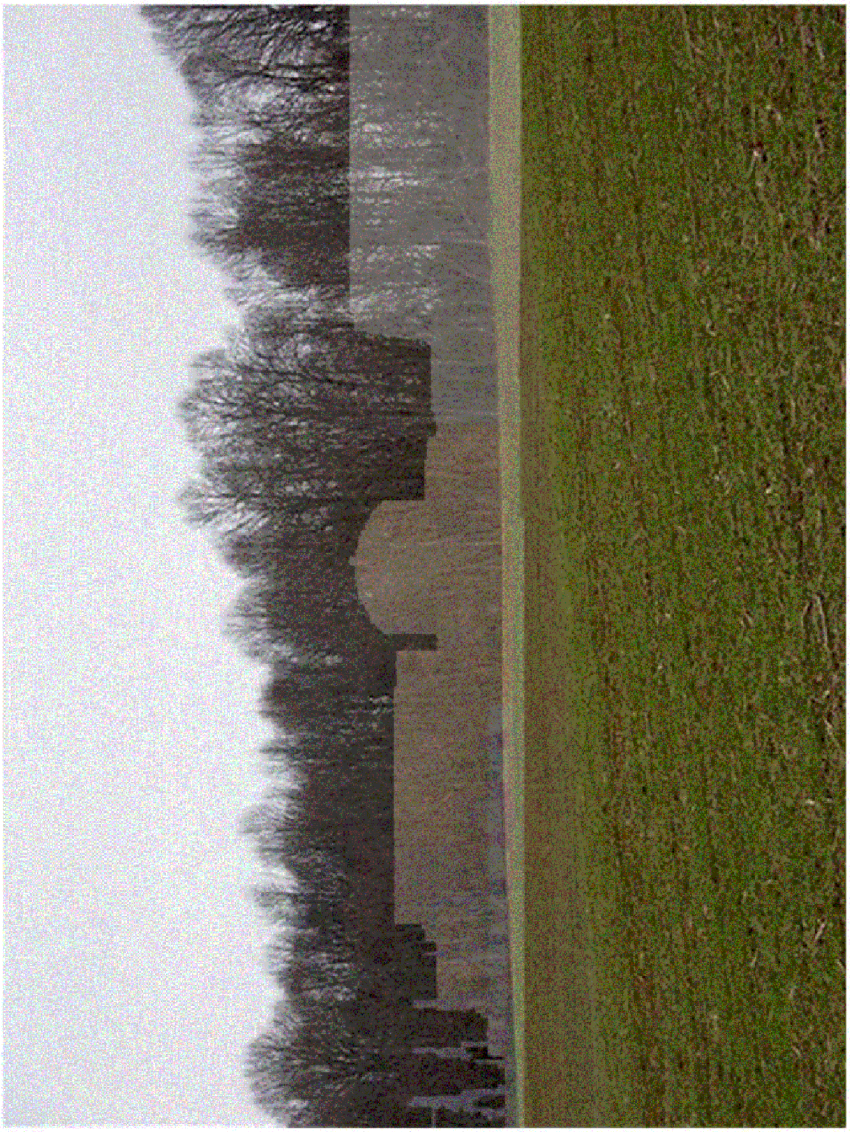

Figure 3.1-4—Ground Level View Looking North with CCNPP Unit 3 Structures Superimposed

© 2007 UniStar Nuclear Services, LLC. All rights reserved.
COPYRIGHT PROTECTED

Figure 3.1-5—Ground Level View Looking East with CCNPP Unit 3 Structures Superimposed

© 2007 UniStar Nuclear Services, LLC. All rights reserved.
COPYRIGHT PROTECTED

Figure 3.1-6—Architectural Rendering of CCNPP Unit 3

© 2007 UniStar Nuclear Services, LLC. All rights reserved.
COPYRIGHT PROTECTED

3.2 REACTOR POWER CONVERSION SYSTEM

3.2.1 GENERAL

CalvertCliffs 3 Nuclear Project, LLC (Calvert Cliffs 3 Nuclear Project) and UniStar Nuclear Operating Services (UNOS), LLC propose construction and operation of a new nuclear power plant to be designated Calvert Cliffs Nuclear Power Plant (CCNPP) Unit No. 3 located directly adjacent to the existing Calvert Cliffs site, on property that was formerly a part of the existing Calvert Cliffs site, but is now owned by the Calvert Cliffs 3 Nuclear Project. Calvert Cliffs 3 Nuclear Projec and UniStar Nuclear Operating Services are applying for a combined license for the proposed nuclear power plant.

Calvert Cliffs 3 Nuclear Project, LLC is a limited liability company and is an indirect subsidiary (through UniStar Nuclear Holdings, LLC and UniStar Project Holdings, LLC, which operate as holding companies) of UniStar Nuclear Energy, LLC. UniStar Energy is owned jointly by Constellation New Nuclear, LLC and by EDF Development, Inc. Constellation New Nuclear is a member (through Constellation Energy Nuclear Gropup, LLC) of Constellation Energy Group, Inc. EDF Development is an indirect subsidiary of (through EDF International, SA) of Èlectricitè de Franco, SA. Calvert Cliffs 3 Nuclear Project will be one of the licensees and will own CCNPP, Unit 3.

UniStar Nuclear Operating Services has been formed to be a licensee and to operate Areva's advanced reator, the U.S. Evolutionary Power Reactor (EPR), in the United States. The principal offices of UniStar Nuclear Operating Services are located in Baltimore, MD. The UniStar Operating Services is organized under the laws of the State of Delaware pursuant to the Limited Liability Company Agreement of UniStar Nuclear Operating Services dated May 10, 2006, by Constellation Energy UniStar Holdings, LLC, the predecessor to UniStar Nuclear Holdings, LLC. UniStar Nuclear Operating Services will be one of the lincensees and will operate CCNPP, Unit 3.

In addition, Bechtel Power Corporation has been contracted to perform the Architect/Engineer function.

The U.S. EPR design has a rated core thermal power of 4,590 MWt. The rated and design gross electrical output for the U.S. EPR is approximately 1,710 MWe. Electrical power consumption for auxiliary loads is approximately 130 MWe, with another 18 MWe required for the cooling tower fans, resulting in a rated and design net electrical output of approximately 1,562 MWe. Although the U.S. EPR is to be licensed for 40 years, the proposed operating life of the U.S. EPR is 60 years.

The U.S. EPR design is a four-loop, pressurized water reactor, with a Reactor Coolant System (RCS) composed of a reactor pressure vessel that contains the fuel assemblies, a pressurizer including ancillary systems to maintain system pressure, one reactor coolant pump per loop, one steam generator per loop, associated piping, and related control systems and protection systems. Referring to Figure 3.2-1, which provides a simplified depiction of the reactor power conversion system for the U.S. EPR, the RCS transfers the heat generated in the reactor core to the steam generators where steam is produced to drive the turbine generator. Water is utilized to remove the heat formed inside the reactor core. The reactor coolant pumps provide forced circulation of water through the RCS and a pressurizer, connected to one of the four loops, maintains the pressure within a specified range. Each of the four reactor coolant loops comprises a hot leg from the reactor pressure vessel to a steam generator, a cross-over leg from the steam generator to a reactor coolant pump, and a cold leg from the reactor coolant pump to the reactor pressure vessel. In each of the four loops, the primary water leaving the reactor

© 2007 UniStar Nuclear Services, LLC. All rights reserved.
COPYRIGHT PROTECTED

pressure vessel through an outlet nozzle goes to a steam generator. The primary water flows inside the steam generator tube bundle and transfers heat to the secondary water. The primary water then goes to a reactor coolant pump before returning to the reactor pressure vessel through an inlet nozzle. The feedwater entering the secondary side of the steam generators absorbs the heat transferred from the primary side and evaporates to produce saturated steam. The steam is dried in the steam generators then routed to the turbine to drive it. The steam is then condensed and returns as feedwater to the steam generators. The alternating current, synchronous type generator, driven by the turbine, generates electricity. The generator rotor will be hydrogen cooled and the generator stator will be cooled with water.

The U.S. EPR reactor core consists of 241 fuel assemblies. The fuel assembly structure supports the fuel rod bundles. Inside the assembly, the fuel rods are vertically arranged according to a square lattice with a 17x17 array. There are 265 fuel rods per assembly with the remaining locations used for control rods or instrumentation. The fuel rods are composed of enriched uranium dioxide sintered pellets contained in a cladding tube made of M5 advanced zirconium alloy. Percentage of uranium enrichment and total quantities of uranium for the U.S. EPR core are as follows:

- Cycle 1 (initial) – average batch enrichment is between 2.23 to 3.14 weight percent U-235 and 2.66 weight percent U-235 for core reload with an enriched uranium weight of 285,483 pounds (129,493 kilograms).

- Cycle 2 (transition) – average batch enrichment is between 4.04 to 4.11 weight percent U-235 and 4.07 weight percent U-235 for core reload with an enriched uranium weight of 141,909 pounds (64,369 kilograms).

- Cycle 3 (transition) – average batch enrichment is between 4.22 to 4.62 weight percent U-235 and 4.34 weight percent U-235 for core reload with an enriched uranium weight of 113,395 pounds (51,435 kilograms).

- Cycle 4 (equilibrium) – average batch enrichment is between 4.05 to 4.58 weight percent U-235 and 4.30 weight percent U-235 for core reload with an enriched uranium weight of 113,417 pounds (51,445 kilograms).

Average batch enrichment is the average enrichment for each fuel assembly comprising a batch of fuel. The enrichment for core reload is the average enrichment for all fuel assemblies loaded in the core which is derived from the mass weighted average for the batches of fuel. The above values are 'beginning of life' enrichment values. Discharged enrichment values will be less at the 'end of life' of the assembly. Assembly enrichment reduction is directly proportional to the assembly burnup.

Discharge burnups for equilibrium cores are approximately between 45,000 MWd/MTU to 59,000 MWd/MTU. The batch average discharge burnups for equilibrium cores is about 52,000 MWd/MTU.

Engineered safety features for the U.S. EPR are designed to directly mitigate the consequences of a design basis accident (DBA) and include the following systems and functions:

- Containment - provided to contain radioactivity following a loss of coolant accident (LOCA).

© 2007 UniStar Nuclear Services, LLC. All rights reserved.
COPYRIGHT PROTECTED

- Containment heat removal - associated with the reduction of energy from the containment after a DBA.
- Containment isolation and leakage testing - provided to minimize leakage from the containment.
- Combustible gas control – configured to reduce hydrogen concentrations in order to maintain containment integrity during and immediately following a DBA LOCA.
- Safety injection – designed to provide the emergency core cooling function.
- Control room habitability - designed so that control room occupants can remain in the control room to operate the plant safely under normal and accident conditions.
- Fission product removal and control systems – configured to reduce or limit the release of fission products following a postulated DBA, severe accident or fuel handling accident.
- Emergency heating, ventilation and air conditioning and filtration – provided to reduce radioiodine released as assumed during design basis events.
- Emergency feedwater – designed to supply water to the steam generators following the loss of normal feedwater supplies.
- Control of pH – associated with the control of pH in the containment following a DBA.

The U.S. EPR utilizes a standard nuclear steam turbine arrangement consisting of a tandem compound, six- flow steam turbine, operating at 1,800 revolutions per minute. The generator is an alternating current, synchronous type, with a hydrogen cooled rotor and water cooled stator. The main condenser condenses the steam exhausted from the three low pressure turbine elements, and is a multipressure, three-shell unit with titanium tubes and tubesheet overlay. The condenser heat transfer area for all three shells is estimated to be approximately 1.6 million ft^2 (149 thousand m^2).

The operational back pressure range at guaranteed performance (100% load) is based on the condenser operating at 3.20 inches HgA (108.36 mbar), 2.44 inches HgA (82.63 mbar) and 1.85 HgA (62.65 mbar) in the high pressure, intermediate pressure and low pressure condenser shells, respectively. For 100% unit load at the average plant back pressure of 2.5 inches HgA (84.7 mbar), the anticipated turbine heat rate is approximately 9,200 BTU/kW-hr.

Circulating water for the U.S. EPR is cooled by a closed-loop, mechanical draft cooling tower. Waste heat rejected to the atmosphere via the cooling tower is 3,238 MWt, resulting in an overall thermal efficiency of approximately 29%.

© 2007 UniStar Nuclear Services, LLC. All rights reserved.
COPYRIGHT PROTECTED

Figure 3.2-1—Reactor Power Conversion System

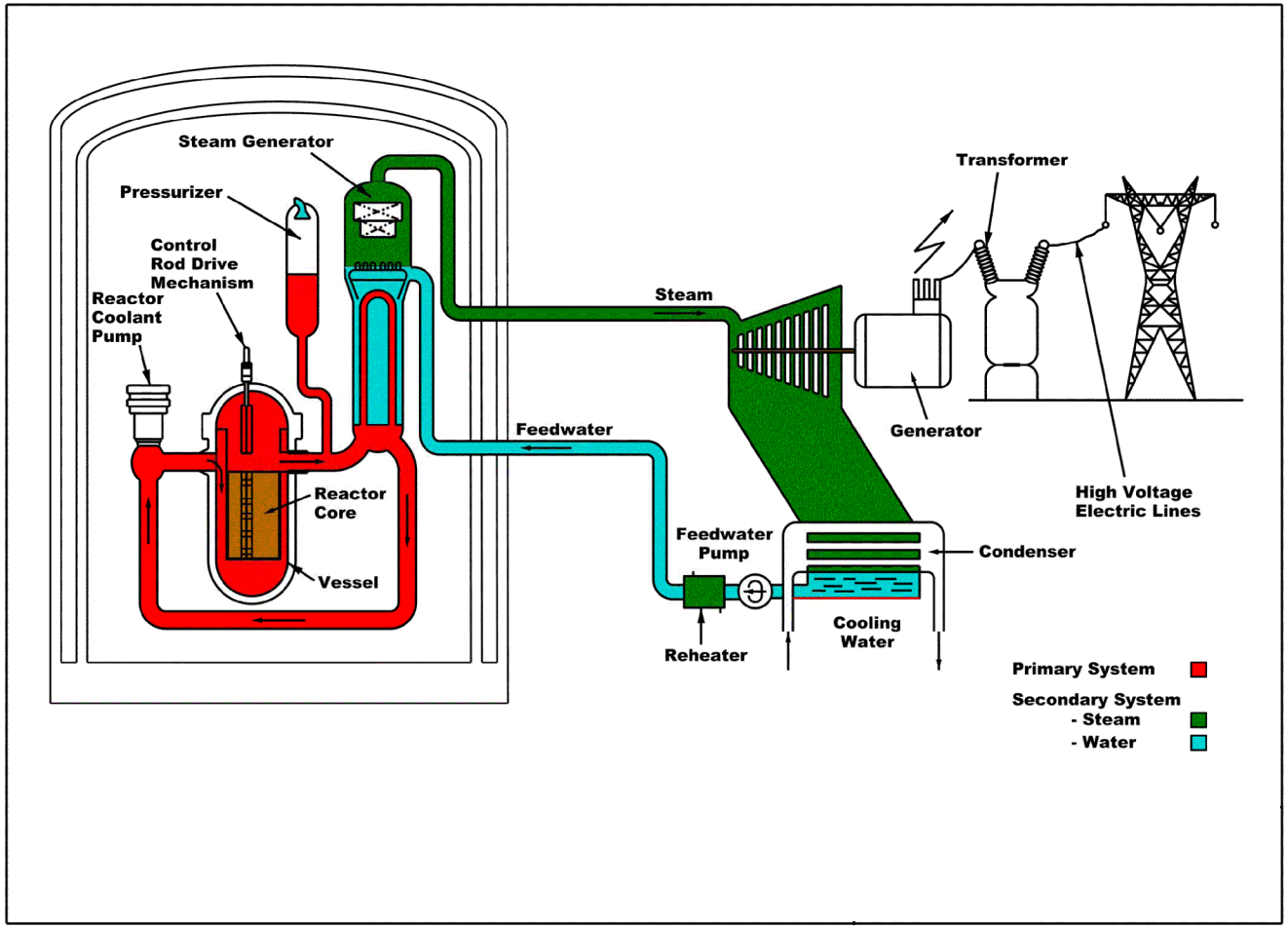

© 2007 UniStar Nuclear Services, LLC. All rights reserved.
COPYRIGHT PROTECTED

3.3 PLANT WATER USE

CCNPP Unit 3 requires water for cooling and operational uses. Sources for water include the Chesapeake Bay and desalinated Chesapeake Bay water (i.e., fresh water supply). Water from the Chesapeake Bay provides makeup water for plant cooling. Desalinated water provided by the CCNPP Unit 3 Desalinization Plant supplies makeup water for power plant operations. Figure 3.3-1 and Table 3.3-1 quantitatively illustrate the average and maximum water flows to and from various plant systems for normal plant operating conditions and normal shutdown/cooldown conditions, respectively. Flow rates for other plant modes are not applicable since there is no change in demand during startup or refueling operating conditions. The average flows represent continuous plant water usage requirements whereas the maximum flows represent intermittent demands. Water use by non-plant facilities includes potable and sanitary needs for administrative buildings and warehouses, and water required for landscaping maintenance. Potable water demand is based on projected staffing during normal plant operation. Other station water users, as noted above, have not been included in the estimated demand. However, water stored in the raw water storage tanks is expected to meet the needs of non-plant facilities since the tanks were designed for peak load provisions.

3.3.1 WATER CONSUMPTION

Primary water consumption is for turbine condenser cooling. Cooling water for the turbine condenser and closed cooling heat exchanger for normal plant operating conditions is provided by the Circulating Water Supply System (CWS), which is a non-safety-related interface system. Circulating water for condenser heat dissipation is taken from the Chesapeake Bay and will normally be withdrawn at an average rate of ~~38,302~~38,032 gpm (143,968 lpm). A small fraction of the intake water will be used to clean debris from the traveling screens. The CWS discharges the heated water from the condenser to the CWS cooling tower. For the closed-loop CWS cooling tower, approximately half of the water withdrawn from the Chesapeake Bay will be lost to the atmosphere as evaporation and to cooling tower drift. The other half will be released as blowdown. Therefore, the average consumptive use of Chesapeake Bay water during normal operating conditions will be approximately 8.2 E+08 gallons per month (3.1 E+09 liters per month) . Consumptive rates should not fluctuate during droughts as might occur if the source for water were a river or variable lake. Consumptive rates will vary with temperature and humidity. Furthermore, considering that the elevation of pump suction at the CWS Intake Makeup Structure will be lower than the lowest anticipated bay water level and since the pumps and associated electrical equipment will be housed within watertight enclosures, there will be no high water limit due to storm surges. During normal shutdown/cooldown conditions, the maximum flow of water required by the CWS will be 44,320 gpm (~~157,770~~167,770 lpm).

Mechanical draft cooling towers with water storage basins (i.e., one basin for each of the four trains) comprise the Ultimate Heat Sink (UHS) which functions to dissipate heat rejected from the Essential Service Water System (ESWS). The ESWS is vital for all phases of plant operation and is designed to provide cooling water during power operation and shutdown of the plant. Under normal operating and normal shutdown/cooldown conditions, the ESWS cooling tower water storage basins will be supplied with non-safety-related makeup water pumped from the Desalinization Plant at an average rate of 629 gpm (2,381 lpm). The Desalination Plant will utilize seawater reverse osmosis technology. A membrane filtration system will pre-treat feed to the reverse osmosis equipment. The makeup water serves to replenish water losses due to cooling tower evaporation and drift at a rate of 566 gpm (2,142 lpm) and 2 gpm (8 lpm) , respectively. The remaining water is released to the Chesapeake Bay as ESWS cooling tower blowdown at an average rate of 61 gpm (231 lpm). For normal operation, desalinated water consumption will average approximately ~~2.5~~3.5 E+07 gallons per month (~~9.3 E+07~~1.3 E+08

© 2007 UniStar Nuclear Services, LLC. All rights reserved.
COPYRIGHT PROTECTED

liters per month). Consumptive rates should not vary during dry periods. During normal plant shutdown/cooldown, when all four trains of the ESWS are operating , ~~the~~ peak water demand will be 1,490 gpm (5,640 lpm). The maximum water flow will be provided by the Desalinization Plant and from water stored in the desalinated water storage tank~~s~~. Peak water demand will only be for a short period of time. Any shortfall in demand will be provided by onsite stored water tanks.

The ESWS cooling towers are connected to the remainder of the ESWS through intake and discharge paths. The ESWS takes suction from the ESWS cooling tower basins and cools the Component Cooling Water System (CCWS) heat exchangers. The CCWS is a closed-loop cooling water system that in conjunction with the ESWS provides a means to cool the reactor core, removing heat generated from plant essential and non-essential components connected to the CCWS.

During a design basis accident, Chesapeake Bay water will provide safety-related makeup water for the ESWS cooling tower, for the UHS functions.However, since the consumptive rate for accidents is not associated with normal modes of plant operation, this rate is not shown on the water use diagram, Figure 3.3-1.

Sustained desalinated water demand for power plant makeup is 183 gpm (693 lpm) and includes water supplies for the Demineralized Water Distribution System, the Potable and Sanitary Water Distribution System, ~~and~~ the Fire Water Distribution System and floor wash drains. The Demineralized Water Distribution System produces and delivers demineralized water to consumers in the power plant ~~for systems~~ that need high quality, non-safety makeup water. Except for containment isolation, the Demineralized Water Distribution System interfaces are non-safety-related. Under normal system operation, water consumption by the Demineralized Water Distribution System is 80 gpm (303 lpm). During normal shutdown/cooldown conditions, water consumption is also anticipated to be approximately 80 gpm (303 lpm). During normal plant operation, the Potable and Sanitary Water Distribution System supplies consumers with pre-treated water (i.e., Drinking Water Supply) at an average rate of 93 gpm (352 lpm). Due to potential surges in demand, water consumption during normal shutdown/cooldown conditions is anticipated to be 216 gpm (818 lpm). The system provides water for human consumption and sanitary cleaning purposes, and can be used by other systems as a water source. The Potable and Sanitary Water Distribution System is not connected with any radioactive source or other system which may contain substances harmful to the health of personnel. Failures in the Potable and Sanitary Water Distribution System will have no consequences on plant operation or safety functions. Similarly, the Fire Water Distribution System is classified as a non-safety system. It is required to remain functional following a plant accident, to provide water to hose stations in areas containing safe shutdown equipment. Water consumed by the Fire Water Distribution System during normal conditions is required to maintain system availability. The maximum consumptive rate accounts for system actuation. During normal operation, water consumed by the Fire Water Distribution System is due to system leakage and periodic testing. The maximum consumptive rate is based on meeting the National Fire Protection Association (NFPA)'s requirements for replenishing fire protection water storage. The average and maximum flows for powerplant floor wash drains are anticipated to be the same.

Miscellaneous low volume waste and treated radwaste generated by ~~CCNPP Unit 3~~ the power plant and sanitary waste treated by the Sanitary Waste Water Treatment Plant are ~~discharged~~ returned to the bay at a combined average rate of 143 gpm (541 lpm). This equates to an average consumptive rate of 40 gpm (151 lpm) for power plant ~~makeup~~, or 1.7 E+06 gallons per month (6.5 E+06 liters per month). As previously stated, water consumption should not vary

© 2007 UniStar Nuclear Services, LLC. All rights reserved.
COPYRIGHT PROTECTED

during drought conditions since the Chesapeake Bay provides water for the Desalinization Plant. Also, as previously stated, there will be no high water limit due to storm surges. Maximum water flow required for power plant makeup during normal shutdown/cooldown conditions is 926 gpm (3,505 lpm).

In addition to providing makeup water for the ESWS cooling towers and makeup water for the power plant, the average and maximum additional capacity usage rate for the Desalination Plant is anticipated to be 413 gpm (1,563 lpm). Additional capacity is allotted for other potential usage.

Prior to discharge into the Chesapeake Bay, CWS cooling tower and ESWS cooling tower blowdown, and miscellaneous low volume waste are directed to the Waste Water Retention Basin. Wastes resulting from the Desalination Plant's membrane filtration and reverse osmosis equipment will also collect in the Waste Water Retention Basin. The Waste Water Retention Basin serves as an intermediate discharge reservoir. During plant startup, startup flushes and chemical cleaning wastes will first collect in temporary tanks or bladders, and will then be discharged into the Waste Water Retention Basin. Waste Water Retention Basin effluents and treated sanitary waste and liquid radwaste collectinthe seal well. The seal well is a collection point for all effluents ~~which is used to prevent waste water backflow, and allows solid particles to settle and liquids to be~~ prior to their discharge~~d back~~ into the Chesapeake Bay.

Total water demand for the Chesapeake Bay during normal operations is 41,095 gpm (155,563 lpm). From this total, 21,019 gpm (79,566 lpm) is returned to the bay from the sealwell . The remaining 20,076 gpm (76,010 lpm) is primarilyattributed to the CWS and ESWS cooling towers evaporation and drift losses.

Section 2.3.2 provides a discussion of permitted activities associated with plant water consumption. Section 4.2 provides a discussion of limitations and restrictions on water consumption during construction activities.

3.3.2 WATER TREATMENT

Water treatment will be required for both influent and effluent water streams. Considering that the cooling water source for CCNPP Unit 3 is the same as that for CCNPP Units 1 and 2, cooling water treatment methodologies for CCNPP Unit 3 will be similar. However, since desalinated water will provide water for CCNPP Unit 3 operations, in lieu of groundwater used by CCNPP Units 1 and 2, fresh water treatment methodologies will differ between the two plants. As previously noted, the source of fresh water for CCNPP Unit 3 will be desalinated bay water. Table 3.3-2 lists the principal water treatment systems and treatment operating cycles. The types, quantities and points of chemical additives to be used for water treatment are also indicated.

The Circulating Water Treatment System provides treated water for the CWS and consists of three phases: makeup treatment, internal circulating water treatment and blowdown treatment. Makeup treatment will consist of a biocide (i.e., sodium hypochlorite) injected into Chesapeake Bay water influent during spring, summer and fall months to minimize marine growth and control fouling on heat exchanger surfaces. Treatment will improve makeup water quality. Similar to CCNPP Units 1 and 2, an environmental permit to CWS operate this treatment system will be obtained from the State of Maryland. For prevention of legionella, treatment for internal circulating water components (i.e., piping between the CWS Makeup Water Intake Structure and condensers) may utilize existing power industry control techniques consisting of hyperchlorination (chlorine shock) in combination with continuous or intermittent chlorination at lower levels, biocide and scale inhibitor addition. Blowdown

© 2007 UniStar Nuclear Services, LLC. All rights reserved.
COPYRIGHT PROTECTED

treatment will depend on water chemistry, but is anticipated to include application of a biocide (i.e., sodium hypochlorite), dechlorination (i.e., sodium bisulfite) and scale inhibitor (i.e., dispersant) to control bio-growth, reduce residual chlorine, and protect against scaling, respectively. Since, seawater has a tendency to foam due to the presence of organics, a small amount of antifoam may also be added to blowdown.

ESWS cooling tower water chemistry will be maintained by the ESWS Water Treatment System, which is a nonsafety-related system designed to treat desalinated water for normal operating conditions and normal shutdown/cooldown. Treatment of system blowdown will also control the concentration of various chemicals in the ESWS cooling water. During design basis accident conditions, the ESWS Water Treatment System is assumed to be non-operational.

Desalinated water will be treated by the Demineralized Water Treatment System, which provides demineralized water to the Demineralized Water Distribution System. During normal operation, demineralized water is delivered to power plant systems. Treatment techniques will meet makeup water treatment requirements set by the Electric Power Research Institute and include the addition of a corrosion inhibitor(s), similar to the Service Water System for CCNPP Units 1 and 2 which uses demineralized water.

The Drinking Water Treatment System, which supplies water for the Potable and Sanitary Distribution System, will treat desalinated water so that it meets the State of Maryland's potable (drinking) water program and standards by U.S. EPA for drinking water quality under the National Primary Drinking Water Regulation (NPDWA) and National Secondary Drinking Water Regulation (NSDWA). The system will be designed to function during normal operation and outages (i.e., shutdown). However, treatment of desalinated water for the Fire Water Distribution System is not anticipated.

Liquid wastes generated by the plant during all modes of operation will be managed by the Liquid Waste Storage System and the Liquid Waste Processing System. The Liquid Waste Storage System collects and segregates incoming waste streams between radioactive and non-radioactive sources, provides initial chemical treatment of those wastes, and delivers them to one or another of the processing systems. The Liquid Waste Processing System separates waste waters from radioactive and chemical contaminants. The treated water is returned to the Liquid Waste Storage System for monitoring and eventual release. Chemicals used to treat waste water for both systems include sulfuric acid for reducing pH, sodium hydroxide for raising pH and an anti-foaming agent, complexing agent and/or precipitant for promoting settling of precipitates.

The Waste Water Treatment Plant System will be used to treat sewage for CCNPP Unit 3. This treatment system removes and processes raw sewage so that discharged effluent conforms to applicable local and state health and safety codes, and environmental regulations. Sodium hypochlorite (chlorination) is used to disinfect the effluent by destroying bacteria and viruses and sodium thiosulfate (de-chlorination) reduces chlorine concentration to a specified level before final discharge. Soda ash (sodium bicarbonate) is used for pH control. Alum and polymer are used to precipitate and settle phosphorus and suspended solids in the alum clarifier; polymer is also used to aid flocculation. The solids are shipped offsite to a permitted sanitary treatment facility.

Effluents from water treatment systems discharged to the Chesapeake Bay will meet chemical and water quality limits established in the National Pollutant Discharge Elimination System (NPDES) permit for CCNPP Unit 3. Section 5.2 provides a discussion on effluent limitations and permit conditions.

© 2007 UniStar Nuclear Services, LLC. All rights reserved.
COPYRIGHT PROTECTED

Table 3.3-1—Anticipated Water Use

(Page 1 of 2)

Water Streams	Average Flow [a] gpm (lpm)	Maximum Flow [b] gpm (lpm)
Chesapeake Bay ~~Desalinated~~ Water ~~(Fresh Water)~~ Demand for Desalinization[c,d]	**3,063 (11,595)**	**3,063 (11,595)**
Membrane Filtration (Backwash)	306 (1,158)	306 (1,158)
Reverse Osmosis	2,757 (10,437)	2,757 (10,437)
Reverse Osmosis Reject [e]	1,532 (5,799)	1,532 (5,799)
Essential Service Water System ~~(ESWS)~~/Ultimate Heat Sink (UHS) System Makeup [ef]	629 (2,381)	1,490 (5,640)
~~ESWS~~UHS Cooling Tower Evaporation[l]	566 (2,142)	1,364 (5,163)
~~ESWS~~UHS Cooling Tower Drift	2 (8)	4 (16)
~~ESWS~~UHS Cooling Tower Blowdown	61 (231)	122 (461)
Power Plant Makeup	183 (693)	926 (3,505)
Demineralized Water Distribution System	80 (303)	80 (303)
Potable and Sanitary Water Distribution System [~~g~~k]	93 (352)	216 (818)
Plant Users[k]	93 (352)	216 (818)
Non-Plant Users[g]	0 (0)	0 (0)
Fire Water Distribution System [h]	5 (19)	625 (2,365)
Floor Wash Drains	5 (19)	5 (~~'~~19~~'~~)
Additional Capacity	413 (1,563)	413 (1,563)
Chesapeake Bay Water Demand	**41,095 (155,563)**	**47,383 (179,365)**
Desalinization Plant	3,063 (11,595)	3,063 (11,595)
Circulating Water ~~Supply~~ System ~~(CWS)~~	38,032 (143,968)	44,320 (167,770)
~~CWS~~ Circulating Water System Cooling Tower Evaporation	19,016 (71,984)	22,160 (83,885)
~~CWS~~ Circulating Water System Cooling Tower Drift [i]	39 (148)	39 (148)
~~CWS~~ Circulating Water System Cooling Tower Blowdown	18,977 (71,836)	22,121 (83,737)
Effluent Discharge to Chesapeake Bay from Seal Well[m]	**21, 019 (79,566)**	**24,363 (92,224)**
Seal Well	21,019 (79,566)	24,363 (92,224)
Waste Water Retention Basin Discharge	20,915 (79,172)	24,136 (91,364)
Miscellaneous Low Volume Waste	39 (148)	55 (209)
~~ESWS~~ UHS Cooling Tower Blowdown	61 (231)	122 (461)
~~CWS~~ Circulating Water System Cooling Tower Blowdown	18,977 (71,836)	22,121 (83,737)
Desalinization Plant Waste	1,838 (6,957)	1,838 (6,957)
Membrane Filtration	306 (1,158)	306 (1,158)
Reverse Osmosis Reject [e]	1,532 (5,799)	1,532 (5,799)
Start-up Temporary Storage Discharge [j]	---	---
Trash Screen Cleaning Water Discharge [j]	---	---
Treated Sanitary Waste	93 (352)	216 (818)
Treated Liquid Radwaste	11 (42)	11 (42)

© 2007 UniStar Nuclear Services, LLC. All rights reserved.
COPYRIGHT PROTECTED

Table 3.3-1—Anticipated Water Use

(Page 2 of 2)

Water Streams	Average Flow [a] gpm (lpm)	Maximum Flow [b] gpm (lpm)

~~Key:~~
~~gpm – gallons per minute~~
~~lpm – liters per minute~~

Notes:

a ~~1~~ Average flow represents the expected water consumptive rates and returns for nrmal plant operating conditions.

b ~~2~~ Maximun flow represents water consumptive rates and returns during normal shutdown/cooldown.

c ~~3~~ The source for freshwater is desalinated Chesapeake Bay water.

d ~~4~~ Maximum flow of 3,063 gpm (11,595 lpm) will be provided to the Desalinization Plant, which produces 1,225 gpm (4,637 lpm) of fresh water. Maximum fresh water demand will be met with Desalinization Plant makeup of 1,225 gpm (4,637 lpm) plus water stored in the desalinated water storage tank.

e ~~5~~ The desalinated water demand of 3,063 gpm (11,595 lpm) is based on 40% recovery for the preliminary design of the Desalinixzation Plant. Influent flow to the reverse osmosis (RO) process equipment is 3, 063 gpm (11,595 lpm). Backwash of the membrane fioltration results in 306 gpm (1,158 lpm) of membrane filter reject flow. Assuming 40% recovery from the Desalinization Plant, the corresponding production rate for the RO process would be approximately 1,532 gpm (5,799 lpm). Referring to the above table, note that a production rate of 1,225 gpm (4,637 lpm) would be less that the makeup demand for the UHS cooling towers. However, the makeup and evaporation demands fo rthe UHS cooling towers in the above table are bounding values that occur under design ambient conditions; actual demands are anticipated to be significantly less. Therefore, the flows will likely change during the detailed design phase. Also, the difference between actual demand and flow anticipated by RO equipment will be accomodated by the desalinated water storage tank

f ~~6~~ Two trains will be operating under normal conditions and four trains during shutdown/cooldown.

g ~~7~~ The average flow for potable water demand is based on projected staffing during normal plant operation. Non-plant water users include potable and sanitary needs for administrative buildings and warehouses, and water required for landscaping maintenance. Non-plant water users have not been included in the estimated demand. However, water stored in the raw water storage tank(s) is expected to accomodate other station water users since it will be designed for peak load provisions.

h ~~8~~ During normal operating conditions, water consumed by the Fire Water Distribution System is attributed to system leakage and periodic testing. The maximum consumptive rate is based on meeting the National Fire Protection Association's requirement for replenishing fire protection water storage.

i ~~9~~ The average and maximum cooling tower drift losses are considered equivalent and are less than 0.005% of the CWS flow rate of 785,802 gpm (2,974,584 lpm).

j ~~10~~ Startup effluents occur during plant start-up; the effluents will be stored with in tanks or bladders, which will be removed oce startup is complete. Makeup flows associated with startup and trash screen cleaning are anticipated to be minimal. Similarly, discharges associated with startup effluents and trash screen cleaning effluents, are also anticipated to be minimal.

k ~~11~~ The maximum potatble and sanitary water usage is estimated based on the maximum continuous flow in the Nuclear Island and Conventional Island, and on maximum intermittent flow in either area.

l ~~12~~ The average evaporative rate during normal operation with two trains operating is 283 gpm (1,071 lpm) per train. The maximum evaporation rate during shutdown/cooldown with four trains operating is 341 gpm (1,291 lpm) per train. The blowdown rate is based on 10 cycles of concentration.

m ~~13~~ Consumptive loss in the power plant is 40 gpm (151 lpm). This is derived as follows: [183 gpm - (11 gpm liquid radwaste + 93 gpm sanitary waste + 39 gpm misc. low volume waste)] = 40 gpm. Total water consumed is: (566 gpm + 2 gpm) ESWS cooling tower evaporation and drift + (19,016 gpm + 39 gpm) Circulating Water System cooling tower evaporation and drift + (413 gpm) additional capacity + (40 gpm) power plant consumption = 20,076 gpm (75,996 lpm). Note that this also equates to 41,095 gpm - 21,019 gpm (i.e., bay water flow demand minus effluent discharged into the bay.

© 2007 UniStar Nuclear Services, LLC. All rights reserved.
COPYRIGHT PROTECTED

Table 3.3-2—Water Treatment Systems

(Page 1 of 2)

System	Point(s) of Addition	Chemical Additives	Estimated Quantity	Operating Cycle(s)
Circulating Water Treatment System [a]	Circulating Water Supply System (CWS) Makeup			Normal Operating Conditions and Normal Shutdown/Cooldown
	CWS Piping	Sodium Hydroxide (1 - 5 wt%) Sodium Hypochlorite (10 - 20 wt%)	547,500 gal/yr (2,072,513 l/yr)	
	CWS Blowdown	Dispersant	383,000 lb/yr (173,726 kg/yr)	
		Sodium Bisulfite (40 wt%)	191,500 lb/yr (86,863 kg/yr)	
		Antifoam	18,250 gal/yr (69,084 l/yr)	
Essential Service Water System (ESWS) Cooling Tower Water Treatment System [b]	ESWS Cooling Tower Makeup ESWS Cooling Tower Blowdown	Sodium Hydroxide (1 - 5 wt%) Sodium Hypochlorite (10 - 20 wt%) Surfactant	2,000 gal/yr (7,571 l/yr)	Normal Operating Conditions and Normal Shutdown/Cooldown
Demineralized Water Treatment System [c]	Demineralized Water Distribution System Makeup	Sulfuric Acid (93 wt%)	2,650 gal/yr (10,031 l/yr)	Normal Operating Conditions and Normal Shutdown/Cooldown
		Sodium Hydroxide (50 wt%)	2,400 gal/yr (9,085 l/yr)	
Drinking Water Treatment System [d]	Potable and Sanitary Distribution System Makeup	Sodium Hydroxide (1- 5 wt%) Sodium Hypochlorite (10 - 20 wt%)	200 gal/yr (757 l/yr)	Normal Operating Conditions and Normal Shutdown/Cooldown
		Iron-based Sorbent	12 ft^3/yr (0.34 m^3/yr)	
Liquid Waste Storage System and Liquid Waste Processing System [d,e]	Influent Waste Water	Sulfuric Acid (93 wt%)	22,900 gal/yr (86,686 l/yr)	Normal Operating Conditions and Normal Shutdown/Cooldown
		Sodium Hydroxide (50 wt%)	2,400 gal/yr (9,085 l/yr)	

© 2007 UniStar Nuclear Services, LLC. All rights reserved.
COPYRIGHT PROTECTED

Table 3.3-2—Water Treatment Systems

(Page 2 of 2)

System	Point(s) of Addition	Chemical Additives	Estimated Quantity	Operating Cycle(s)
Waste Water Treatment Plant [d]	Potable and Sanitary Distribution System Effluent	Sodium Hypochlorite (10-20 wt%)	800 gal/yr (3,028 l/yr)	Normal Operating Conditions and Normal Shutdown/Cooldown
		Sodium Thiosulfate (100 wt%)	1,000 lb/yr (454 kg/yr)	
		Soda Ash	12,000 lb/yr (5,443 kg/yr)	
		Alum / (5 wt%) with Polymer	200 gal/yr (757 l/yr)	

Key: gal/yr – gallons per year l/yr – liters per year	ft^3/yr – cubic feet per year m^3/yr – cubic meters per year	lb/yr – pounds per year kg/yr – kilograms per year

Notes:

a. The CWS has no safe shutdown or accident mitigation functions. Sodium hypochlorite will typically be added to makeup water. Sodium hypochlorite and dispersant may be added to piping. Dispersant may contain 10 to 20 weight percent 1-hydroxy-1, 1-diphosphoroethane. Chlorine may also be added to piping for prevention of legionella. All four chemicals listed may be added to blowdown. The sodium bisulfate will be added to the blowdown only. The antifoaming agent will contain between 60 to 100 weight percent petroleum distillate. The estimated quantities of chemical additives are totals used throughout the Circulating Water Treatment System.

b. During a DBA, the ESWS Cooling Tower Water Treatment System is assumed to be non-operational. The estimated quantity of chemical additives is a combined total for both chemicals listed.

c. The estimated quantities of chemical additives are based on the existing CCNPP Units 1 and 2 Demineralized Water Treatment System which uses the indicated chemicals for the regeneration of condensate demineralizers. The actual quantities of chemical additives will depend on how the demineralizer for CCNPP Unit 3 will be used (i.e., full-flow demineralizers use higher quantities).

d. Types and estimated quantities of chemical additives are based on those used at an existing plant.

e. An anti-foaming agent, complexing agent and/or precipitant may also be used to promote settling of precipitates.

© 2007 UniStar Nuclear Services, LLC. All rights reserved.
COPYRIGHT PROTECTED

Figure 3.3-1—Anticipated Water Use Diagram

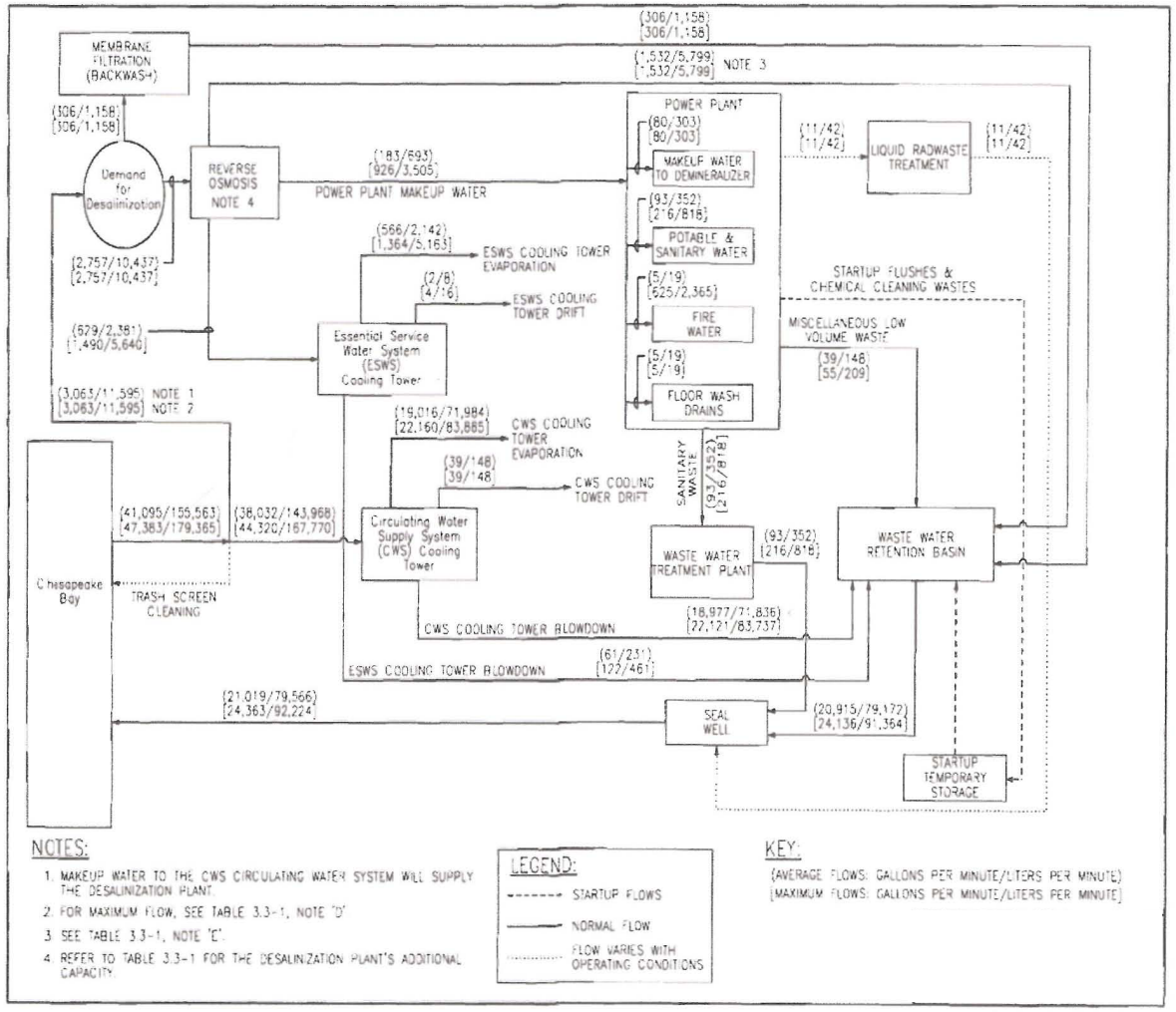

© 2007 UniStar Nuclear Services, LLC. All rights reserved.
COPYRIGHT PROTECTED

3.4 COOLING SYSTEM

The Calvert Cliffs Nuclear Power Plant (CCNPP) Unit 3 cooling system design, operational modes, and component design parameters are determined from the U.S. EPR design documents, site characteristics, and engineering evaluations. The plant cooling systems and the anticipated cooling system operational modes are described in Section 3.4.1. Design data and performance characteristics for the cooling system components are presented in Section 3.4.2. These characteristics and parameters are used to assess and evaluate the impacts on the environment. The environmental interfaces occur at the intake and discharge structures and the cooling towers. There are two cooling systems that have intakes and cooling towers. These systems are the Circulating Water Supply System (CWS) and the Essential Service Water System (ESWS). Figure 3.4-1 is a general flow diagram of the cooling water systems for CCNPP Unit 3.

3.4.1 DESCRIPTION AND OPERATIONAL MODES

3.4.1.1 Circulating Water Supply System/Auxiliary Cooling Water Systems

The U.S. EPR uses a Circulating Water Supply System (CWS) to dissipate heat. A closed-cycle, wet cooling system is used for CCNPP Unit 3. This is a different design from the existing CCNPP Units 1 and 2 which have a once-through cooling system. The CCNPP Unit 3 system uses a single plume abated mechanical draft cooling tower for heat dissipation. Under the restrictions imposed by Section 316 of the Federal Clean Water Act, closed-cycle cooling is the only practical alternative for CCNPP Unit 3 that would meet both the Section 316(b) intake requirements at new facilities, as well as the Section 316(c) thermal requirements at this multi-facility site. The CWS at CCNPP Unit 3 dissipates up to 1.108 x 10^{10} BTU/hr (2.792 x 10^{9} Kcal/hr) of waste heat rejected from the main condenser and the Closed Cooling Water System (CLCWS) during normal plant operation at full station load. The exhausted steam from the low pressure steam turbine is directed to a surface condenser (i.e., main condenser), where the heat of vaporization is rejected to a loop of CWS cooling water. Cooling water from the CWS is also provided to the auxiliary cooling water system. Two 100% capacity auxiliary cooling water system pumps receive cooling water from the CWS and deliver the water to the CLCWS heat exchangers. Heat from the CLCWS is transferred to the auxiliary cooling water system and heated auxiliary cooling water is returned to the CWS. The heated CWS water is sent to the spray headers of the cooling tower, where the heat content of the water is transferred to the ambient air via evaporative cooling and conduction. After passing through the cooling tower, the cooled water is recirculated back to the main condenser and auxiliary cooling water system to complete the closed cycle cooling water loop. The CWS has nominal flow rate of ~~777,560~~785,802 gpm (~~2,943,385~~2,974,584 lpm).

Evaporation in the cooling tower increases the level of solids in the circulating water. To control solids, a portion of the recirculated water must be removed or blown down and replaced with clean water. In addition to the blowdown and evaporative losses, a small percentage of water in the form of droplets (drift) would also be lost from the cooling tower. Peak anticipated evaporative losses are approximately 22,160 gpm (83,885 lpm). Maximum blowdown is approximately 22,121 gpm (83,737 lpm). ~~Maximum~~ The drift losses are ~~about~~ conservatively 39 gpm (148 lpm) based upon 0.005% of the CWS nominal flow rate for water balance purposes. The actual drift rate will be 0.0005%. Makeup water from the Chesapeake Bay is required to replace the ~~47,383~~44,320 gpm (~~179,365~~167,770 lpm) losses from evaporation, blowdown and drift.

Makeup water for the CWS will be taken from the Chesapeake Bay by pumps at a maximum rate of approximately ~~43,480~~47,383 gpm (~~164,590~~179,365 lpm). This is based on maintaining the CWS and supplying the desalination plant with 3,063 gpm (11,595 lpm). The pumps will be

© 2007 UniStar Nuclear Services, LLC. All rights reserved.
COPYRIGHT PROTECTED

installed in a new intake structure located ~~next to the south end of~~ between the existing CCNPP Units 1 and 2 intake structure and the existing barge slip. The makeup water is pumped through a common header directly to the cooling tower basin. Blowdown from the cooling tower discharges to a common retention basin to provide time for settling of suspended solids and to permit further chemical treatment of the wastewater, if required, prior to discharge to the Chesapeake Bay. Figure 3.1-1 shows the location of the CCNPP Unit 3 intake structure, cooling tower, retention basin and discharge.

The CWS water is treated as required to minimize fouling, inhibit scaling on the heat exchange surfaces, to control growth of bacteria, particularly Legionella bacteria, and to inhibit corrosion of piping materials. Water treatment is discussed in Section 3.6.

3.4.1.2 Essential Service Water System/Ultimate Heat Sink

The U.S. EPR design has a safety-related ESWS to provide cooling water to the Component Cooling Water System (CCWS) heat exchangers located in the Safeguards Building and to the cooling jackets of the emergency diesel generators located in the Emergency Power Generating Buildings. The ESWS is used for normal operations, refueling, shutdown/cooldown, anticipated operational events, design basis accidents and severe accidents. The ESWS is a closed-loop system with four safety-related trains and one non-safety-related dedicated (severe accident) train to dissipate design heat loads. The non-safety-related train is associated with one safety-related train.

Safety-related two-cell mechanical draft cooling towers with water storage basins comprise the Ultimate Heat Sink (UHS) which functions to dissipate heat rejected from the ESWS. The two cells of a ESWS cooling tower share a single basin. The ESWS cooling tower basins are sized to provide sufficient water to permit the ESWS to perform its safety-related heat removal function for up to 72 hours post-accident under worst anticipated environmental conditions without replenishment. After 72 hours have elapsed post-accident, if required, the safety-related UHS makeup pumps may be operated to provide brackish water from the Chesapeake Bay to the ESWS cooling tower basins to maintain water inventory for the 30 day post-accident period as stipulated in Regulatory Guide 1.27 (NRC, 1976).

Each of the four ESWS cooling towers has a dedicated CCWS heat exchanger to maintain separation of the safety-related trains. Each ESWS safety-related train uses a dedicated mechanical draft cooling towers to dissipate heat during normal conditions, shutdown/cooldown, or design basis accident conditions. The non-safety-related train uses its associated safety-related train ESWS cooling tower to dissipate heat under severe accident conditions.

Heated ESWS water returns through piping to the spray distribution header of the UHS cooling tower. Water exits the spray distribution header through spray nozzles and falls through the tower fill. Two fans provide upward air flow to remove latent and sensible heat from the water droplets as they fall through the tower fill. The heated air will exit the tower and mix with ambient air, completing the heat rejection process. The cooled water is collected in the tower basin for return to the pump suction for recirculation through the system. Each ESWS cooling tower has a dedicated ESWS pump with an additional pump to supply the severe accident train. Table 3.4-1 provides nominal flow rates and heat loads in different operating modes for the ESWS.

The water loss from the ~~UHS~~ESWS is expected to be 629 gpm (~~2,142~~2,381 lpm) based on 566 gpm (2,142 lpm) from evaporation, 61 gpm (231 lpm) from blowdown, and drift loss of 2 gpm (8 lpm) during normal conditions based on two trains operating. The water loss under

© 2007 UniStar Nuclear Services, LLC. All rights reserved.
COPYRIGHT PROTECTED

shutdown/cooldown conditions will be approximately 1,490 gpm (5,640 lpm) based on 1,364 gpm (5,163 lpm) from evaporation, 122 gpm (461 lpm), from blowdown and drift loss of 4 gpm (15 lpm) with all four ESWS cooling towers in operation. The blowdown from the four ESWS cooling towers will flow by gravity to the common retention basin.

Makeup water to the ESWS is normally supplied from the plant raw water system. The plant raw water system is supplied from a desalination plant which gets water from the Chesapeake Bay via the CWS. The desalination plant produces approximately 1~~.~~,225 gpm (4,637 lpm) of raw water (based on 40% recovery). Under post-accident conditions lasting longer than 72 hours, the makeup water will be supplied from the safety-related UHS makeup water system. The safety-related UHS makeup pumps are housed in a safety-related intake structure near the CWS intake structure.

The ESWS makeup water under ~~DBA~~ normal conditions will be provided at a ~~maximum~~ flow rate of approximately 629 gpm (2,381 lpm) to accommodate the ~~maximum~~ evaporation rate (approximately 566 gpm (2,142 lpm)) and drift loss (approximately 2 gpm (7.5 lpm) for the unit) with ~~no anticipated~~ 61 gpm (231 lpm) blowdown for two ESWS cooling towers. ~~Maximum~~ The ESWS blowdown and makeup rates are based on maintaining ~~two~~ ten cycles of concentration and evaporation at 82°F wet-bulb and 20% relative humidity.

The ESWS water is treated as required to minimize fouling, inhibit scaling on heat exchange surfaces, to control growth of bacteria (particularly Legionella bacteria) and to inhibit the corrosion of piping materials. Pumps, valves and other system component materials will be designed for use in either a fresh or brackish water application.

Figure 3.4-2 shows the preliminary details for the common retention basin.

3.4.1.3 Common Operational Factors

3.4.1.3.1 Station Load Factor

The U.S. EPR is designed to operate with a capacity factor of 95% (annualized), considering scheduled outages and other plant maintenance. For the site, on a long-term basis, an average heat load of 1.053 x10^{10} BTU/hr (2.652 x 10^9 Kcal/hr) (i.e., 95% of the maximum rated heat load of 1.108 x10^{10} BTU/hr (2.792 x 10^9 Kcal/hr)) will be dissipated to the atmosphere.

3.4.1.3.1.1 Chesapeake Bay Water Temperature

Water temperatures measured from 1984 through 2006 ranged between 36.5°F (2.5°C) and 80.6°F (27°C). Since the existing CCNPP Units 1 and 2 began operation, ice blockage that rendered the intake structure and cooling water system inoperable has not occurred. In 1977 and 1978, solid surface ice formed in the intake channel. The cooling system, however, was able to continue operating without the differential pressure across the traveling screens reaching the High-High setpoint although some pulverized ice and slush were pumped into the system leading to increased blockage of strainers downstream of the pumps. Historical water temperatures in the Chesapeake Bay show that the minimum temperatures near the intake area could produce significant icing of the new intake structure. De-icing controls for the existing CCNPP Units 1 and 2 consist of operational control of the two intake pumps and condenser discharge valve lineups to backwash warmed water from the condenser to the intake channel. Since the design of the new intake and cooling system for the CCNPP Unit 3 does not permit a similar thermal backwash de-icing procedure, de-icing controls, such as heat tracing of the bar racks and/or screens, would be added at the intake structures.

© 2007 UniStar Nuclear Services, LLC. All rights reserved.
COPYRIGHT PROTECTED

3.4.1.3.1.2 Chesapeake Bay Water Level

CCNPP Units 1 and 2 rely on the Chesapeake Bay for safe shutdown and are designed for a minimum bay low water level of -4.0 ft (-1.2 m) NGVD 29 and can continue to operate at an extreme low water elevation of -6.0 ft (-1.8 m) NGVD 29. CCNPP Unit 3 does not rely on Chesapeake Bay water for safe shutdown since the UHS tower basin contains sufficient storage volume for shutdown loads. The unit is not required to be shutdown based on minimum Chesapeake Bay water level. However, the extreme low water elevation of -6.0 ft (-1.8 m) NGVD 29 is incorporated into the design and operation of the UHS makeup water system.

The maximum flood level at the intake location is Elevation 39.4 ft (12.0 m) NGVD 29 as a result of the surge, wave heights, and wave run-up associated with the probable maximum hurricane (PMH). Thus, the UHS intake structure and the electrical building associated with the UHS makeup pumps would experience flooding during a PMH and flood protection measures are required for these buildings. All safety-related structures in the power block area have a minimum grade slab or entrance at Elevation 84.6 ft (25.8 m) NGVD 29 or higher.

3.4.1.3.1.3 Anti-Fouling Treatment

Bio-fouling is controlled using chlorination or other treatment methods in the CWS cooling tower basin. The chemical addition to the cooling tower ensures that the fill in the cooling tower remains free of biofilms and other organic deposits. An additional means of treating bio-fouling in the makeup water obtained from the Chesapeake Bay is provided at the CWS makeup water system intake structure to ensure there is no biological fouling of the intake structure or the makeup water supply piping. Additional pre-treatment of the cooling tower makeup is provided, if required, based on periodic water chemistry sampling. Corrosion inhibitors may also be introduced at these injection points, as required, based on the system piping materials and water chemistry.

Bio-fouling is controlled using chlorination or other treatment methods in the UHS cooling tower basins. UHS cooling tower makeup water is normally supplied by fresh water from the desalination plant . Under post accident conditions lasting longer than three days, however, the makeup water may be brackish water from the Chesapeake Bay. In either case, makeup water will be subjected to appropriate filtration and treatment as required, based on periodic water chemistry sampling. Corrosion inhibitors may also be introduced at these injection points, as required, based on the system piping materials and water chemistry.

3.4.2 COMPONENT DESCRIPTIONS

The design data of the cooling system components and their performance characteristics during the anticipated system operation modes are described in this section. Site-specific estimates are used as the basis for discussion.

3.4.2.1 Chesapeake Bay Intake Structure

The Chesapeake Bay intake system consists of the existing CCNPP Units 1 and 2 intake channel, the CCNPP Unit 3 intake channel, the non-safety-related CWS makeup pump intake structure and associated equipment including the non-safety-related CWS makeup pump, the safety-related UHS makeup water system intake structure and associated equipment including the safety-related UHS makeup water pumps, and the makeup water chemical treatment system. The general site location of the new intake system is shown in Figure 3.4-3. Figure 3.4-4 and Figure 3.4-5 show the intake structure in more detail.

© 2007 UniStar Nuclear Services, LLC. All rights reserved.
COPYRIGHT PROTECTED

The existing intake system consists of the CCNPP Units 1 and 2 dredged channel that extends approximately 4,500 ft (13,80 m) offshore and a 560 ft (171 m) wide, 56 ft (17 m) deep curtain wall that extends the full width of the intake channel creating an embayment in which the intake structures are located (BGE, 1970). The top of the curtain wall is approximately 5 ft (1.5 m) above the water and the bottom is at elevation -28 ft (-8.5 m). Due to siltation, the effective opening is 17 ft (5.2 m), originally the opening was 23 ft (7 m) high. Velocity under the curtain wall at design depth is estimated to be approximately 0.4 ft/sec (0.12 m/sec). Velocities are currently somewhat greater due to siltation (CGG, 2005).

The new ~~The~~ CCNPP Unit 3 intake area will be constructed with a sheet pile wall extending approximately 180 linear feet from the existing shoreline to the existing baffle wall and extending approximately 90 feet channelward from the approximate mean high water shoreline creating an approximately 9,000 ft^2 (836.1 m^2) wedge shaped pool. Approximately 50 ft (15.2 m) of existing shoreline armor protection will be removed to install the new sheet pile wall. Once the new sheet pile wall is in place, approximately 60 ft (18.3 m) of armor within the wedge shaped pool will be removed and temporary upland sheet piling will be installed along the makeup water pipe route. This upland sheet piling will extend out into the wedge shaped pool approximately 30 ft (9.1 m) to facilitate dewatering, installation of pipe and the associated trash rack. The area within the wedge shaped pool surrounded by the pipe line sheet piling will be dewatered and dredged by mechanical method to create an approximately 30 ft (9.1 m) wide by 30 ft (9.1 m) long by 25 ft (7.6 m) deep area, resulting in approximately 900 yds^3 (688.1 m^3) of sand and gravel which will be deposited at an existing upland, environmentally controlled area at the Lake Davies laydown area onsite. After dredging, two 60 in (152.4 cm) diameter intake pipes will be installed with trash racks at the pipe openings, extending approximately 20 ft (6.1m) channelward to a bottom elevation of -25 ft (-7.62 m) mean low water level. After installation of the pipes and associated trash racks, shoreline armour protection approximately 80 ft (24.4 m) in length and extending 10 ft (3.1 m) channelward will be restored within the wedge shaped area. In addition, armour protection will be extended out beyond the new sheet pile wall approximately 75 ft (22.9 m) and extend 205 ft (62.5 m) channelward. As a final step, the temporary sheet pile wall around the 60 in (152.4 cm) intake pipes will be removed allowing the area to reflood and submerge the pipes.~~channel will be an approximately 123 ft (37.49 m) long, 100 ft (30.48 m) wide structure with an earthen bottom at Elevation -20 ft 6 in (-6.25 m) NGVD 29 and vertical sheet pile sides extending to Elevation 10 ft (3.05 m) NGVD 29. The intake channel is shared between the nonsafety-related CWS and the safety-related UHS makeup water systems.~~

The new CCNPP Unit 3 intake ~~channel is located off the existing intake channel for CCNPP Units 1 and 2, which is~~ piping consists of two runs of 60 inch (152.4 cm) diameter safety related concrete pipes approximately 490 ft (149.4 m) long. These pipes convey water from the CCNPP Unit 3 intake area to a CCNPP Unit 3 common forebay approximately 100 ft (30.5 m) long by 80 ft (24.4 m) wide area with an earthen bottom at Elevation -22.5 ft (-6.9 m) NGVD 29 and vertical sheet pile sides extending to Elevation 10 ft (3.1m) NGVD 29. The nonsafety related CWS intake structure and the safety related UHS makeup water intake structure are situated at opposite ends of the common forebay

The new CCNPP Unit 3 intake piping draws water from the intake area. The piping is oriented perpendicular to the tidal flow of the bay. This orientation ~~to~~ minimizes the component of the tidal flow parallel to the ~~channel~~ intake area flow and reduces the potential of fish entering the ~~channel and intake structure~~ piping and common forebay as shown on Figure 3.4-3. The flow velocity into the existing intake ~~channel~~ area from the bay is no more than 0.5 fps (0.15 mps). The flow through the new channel is determined by plant operating conditions. Velocities will also depend on the Chesapeake Bay water level. At the minimum Chesapeake Bay level of -4.0

© 2007 UniStar Nuclear Services, LLC. All rights reserved.
COPYRIGHT PROTECTED

ft (-1.22 m) NGVD 29, the flow velocity along the new intake channel would be less than 0.5 fps (0.15 mps), based on the maximum makeup demand of approximately ~~43,480~~47,383 gpm (~~164,590~~179,365 lpm). The flow velocities at the circulating water makeup structure and the UHS makeup structure would be less than 0.3 fps (0.09 mps) and less than 0.1 fps (0.03 mps), respectively. Since the ~~intake channel~~ common forebay will also act as a siltation basin, dredging may be required to maintain the channel invert elevation.

The new CCNPP Unit 3 CWS makeup water intake structure will be an approximately 78 ft (24 m) long, 55 ft (17 m) wide concrete structure with individual pump bays. Three 50% capacity, vertical, wet pit CWS makeup pumps provide up to 44,000 gpm (166,588 lpm) of makeup water.

The CCNPP Unit 3 UHS makeup water intake structure is approximately ~~125~~75 ft (~~38~~22.9 m) long, ~~70~~60 ft (~~21~~18.3 m) wide concrete structure with individual pump bays. Four 100% capacity, vertical, wet pit UHS water makeup pumps are capable of providing up to ~~provided 2,400~~3,000 gpm (~~9,085~~11,356 lpm) of makeup water or 750 gpm (2,839 lpm) for each pump.

In the UHS makeup intake structure, one makeup pump is located in each pump bay, along with one dedicated traveling screen and trash rack. There are cross bay stop log slots to permit isolation of pumps on an individual bay basis.

For the CWS makeup water intake structure, flow from two traveling screens and trash racks into a common forebay feeds the three CWS makeup pumps. Each CWS pump is located in its own pump bay with cross bay stop log slots to permit isolation of individual pumps. Debris collected by the trash racks and the traveling screens will be collected in a debris basin for cleanout and disposal as solid waste. The through-trash rack and through-screen mesh flow velocities will be less than 0.5 fps (0.15 mps). The trash bar spacing is 3.5 in (8.9 cm) from center to center. The dual flow type of traveling screens with a flow pattern of double entry-center exit will be used for both the CWS and UHS intakes. This arrangement prevents debris carry over. The screen panels will be either metallic or plastic mesh with a mesh size of 0.079 to 0.118 in (2 to 3 mm) square. The mesh is mechanically rotated above the water for cleaning via spray water. The screen wash system consists of two screen wash pumps (single shaft) that provide a pressurized spray to remove debris from the water screens. In both intake structures, ~~there is no need for a fish return system since~~ the flow velocities through the screens are less than 0.5 fps (0.15 mps) in the worst case scenario (minimum bay level with highest makeup demand flow). Nevertheless, a fish return system will be provided to reduce mortality of aquatic species, consistent with the intent of Clean Water Act Section 316(b) regulations.

The growth of slime, algae and other organic materials will be monitored in the intake structure and their components as well as the accumulation of debris on the trash racks. Cleaning will be performed, as necessary.

The combined pumping flow rate from Chesapeake Bay for CCNPP Unit 3 will be a maximum of approximately 47,383 gpm (179,365 lpm).

3.4.2.1.1 Fish Return System

The existing Units 1 and 2 Fish Return Systems are located to the northeast and southeast sides of the Units 1 and 2 Intake Forebay, respectively. Each unit has its own independent Fish Return System. However, both systems are of the same design and water flows through the Fish Return System where environmental aquatic studies can be performed. Traveling screen wash water leaving the facility then enters the Chesapeake Bay directly though a buried conduit to the shoreline outfall. The Fish Return System contains a holding pit, two isolation gates and flow

© 2007 UniStar Nuclear Services, LLC. All rights reserved.
COPYRIGHT PROTECTED

trough. The main isolation gate is normally open, allowing discharge of screen wash water (containing fish) to the Chesapeake Bay. If needed, the main gate would close, and the side isolation gate opens up allowing diversion of screen wash water to the holding pit to allow environmental studies. Water overflowing the holding pit would lead to the buried conduit and exit to the bay.

A new fish collection/holding system, similar to that of Units 1 and 2, will be constructed for the new Unit 3 Intake Structure. It will be located on the east side (bay side) of the Unit 3 Intake Forebay. Screen wash water and fish collected from the traveling screens of the Unit 3 Circulating Water Makeup Intake Structure will be diverted to the new Fish Return System and will be released to the Chesapeake Bay via a buried pipe to a new shoreline outfall. The outfall will be submerged below low tide level to minimize any drop at the exit to facilitate the fish return to the Chesapeake Bay water. No modification to the existing fish return and holding system for Units 1 and 2 is necessary.

To construct the proposed fish return outfall, an 18 in (45.7 cm) diameter HDPE pipe will be installed in a mechanically excavated trench. The pipe will be installed 4 ft (1.2 m) below the bay bottom and will emerge from the bay bottom 40 ft (12.2 m) channelward. The outfall location will be protected with a 10 ft (3.1 m) by 10 ft (3.1 m) riprap apron extending approximately 48 ft (14.6 m) channelward. To install the pipe, approximately 40 linear ft (12.2 m of the existing shoreline revetment will be removed, and approximately 500 yds^3 (382.3 m^3) of materials will be dredged within the work area. The dredged material will be returned to the trench after the pipe is placed, and the existing shoreline revetment will be restored to its original design after pipe installation. Turbidity curtains are anticipated to be used during the work to contain suspended sediments.

3.4.2.2 Final Plant Discharge

The final discharge consists of cooling tower blowdown from the CWS cooling tower, the ESWS cooling towers and site wastewater streams, including the domestic water treatment and circulation water treatment systems. All biocides or chemical additives in the discharge will be among those approved by the U.S. Environmental Protection Agency and the State of Maryland as safe for humans and the environment, and the volume and concentration of each constituent discharged to the environment will meet requirements established in the National Pollutant Discharge Elimination System (NPDES) permit. The types and quantities of chemicals used are discussed in Section 3.3.

The discharge flow to the Chesapeake Bay through the seal well is mainly from the retention basin. Note that treated liquid radioactive waste and effluent from the sewage treatment plant will discharge directly to the seal well. Discharge from the retention basin occurs through an approximately 30 in (76 cm) diameter discharge pipe to the seal well. From the seal well, the discharge pipe is routed to the offshore diffuser outfall where there are three 16 in (41 cm) diameter nozzles to distribute the discharge flow into the bay. The normal discharge flow will be approximately 21,019gpm (~~79,172~~79,566 lpm) and the maximum discharge flow will be approximately 24,363 gpm (~~91,364~~92,224 lpm). This includes the nominal and maximum discharge flow from the CWS cooling tower of approximately 18,977 gpm (71,836 lpm) and ~~22,160~~22,121 gpm (~~83,885~~83,737 lpm), respectively. Figure 3.4-2 and Figure 3.4-6 show the preliminary details for the retention basin and the seal well, respectively.

The discharge structure will be designed to meet all applicable navigation and maintenance criteria and to provide an acceptable mixing zone for the thermal plume per the State of Maryland regulations for thermal discharges. Figure 3.4-7 shows details of the discharge system. The discharge point is near the southwest bank of the Chesapeake Bay approximately

© 2007 UniStar Nuclear Services, LLC. All rights reserved.
COPYRIGHT PROTECTED

~~1,200~~1,151 ft (~~366~~351 m) south and 650 ft (198 m) east of the intake ~~structure~~ piping suction point for CCNPP Unit 3 (relative to plant north) and extends about 550 ft (168 m) into the bay through a buried nominal 30 in (76 cm) discharge pipe with diffuser nozzles at the end of the line. The preliminary centerline elevation of the discharge nozzles of the diffuser is 3 ft (0.9 m) above the Chesapeake Bay bottom elevation. The three 16 in (40.6 cm) diameter nozzles are spaced center-to-center at 9.375 ft (2.86 m) located 3 ft (0.91 m) above the bottom. The angle of discharge is 22.5 degrees to horizontal. Riprap will be placed around the discharge point to resist potential erosion due to discharge jet from the diffuser nozzles. Fish screens are not required on the diffuser nozzles since there will always be flow through the discharge piping, even during outages, to maintain discharge of treated liquid radioactive waste within the concentration limits of the applicable local, state and federal requirements. The length of the diffuser flow after exiting the nozzle is approximately 26 ft (7.9 m).

3.4.2.3 Heat Dissipation System

The CWS cooling tower is used as the normal heat sink. The CWS cooling tower is a mechanical draft cooling tower that has a concrete shell rising to a height of approximately 164 ft (50 m). It is a hybrid design that incorporates dry cooling sections to achieve plume abatement. Internal construction materials include fiberglass-reinforced plastic (FRP) or polyvinyl chloride (PVC) for piping laterals, polypropylene for spray nozzles, and PVC for fill material. Mechanical draft towers use forced air conduction across sprayed water to reject latent and sensible heat from the sprayed water to the atmosphere. The CWS cooling tower will dissipate a maximum waste heat load of up to 1.108×10^{10} BTU/hr (2.792×10^{9} Kcal/hr) from the unit, operate with a 10°F (5.6 °C) approach temperature, and maintain a maximum 90°F (32°C) return temperature at design ambient conditions. Table 3.4-2 provides specifications of the CWS cooling tower. The cooling tower occupies an area of approximately 16 acres (6.5 hectares). The noise levels generated by the CWS cooling tower are approximately 65 dBA or less at the distance of approximately 1,300 feet (396 m) from the cooling tower. The State of Maryland stipulates noise limits based on the classification of the receiving land (55 dBA Ldn for residential land). Ldn is a calculated day-night time average noise level based on an hourly average of the equivalent noise level (Leq) over a 24 hour period. As a rule of thumb for a continuously and invariant operating noise source, the Ldn value is 6.4 dB higher than the average Leq value. The Leq noise limit is therefore 55 dBA to 6.4 dB (or 49.6 dBA). Based on distance losses, the 49.6 dBA (Leq) noise limit will be met within a 7,700 ft (2,347 m) radius from the towers. Figure 3.1-3 shows the location of the CWS cooling tower. Figure 3.1-2 depicts the planned mechanical draft tower, while Figure 3.4-8 provides a sectional view of a typical mechanical draft tower for CCNPP Unit 3.

The ESWS cooling tower is a rectilinear mechanical draft structure. Each of the four ESWS cooling towers are a counterflow, induced draft tower and are divided into two cells. Each cell uses one fan, located in the top portion of the cell, to draw air upward through the fill, counter to the downward flow of water. One operating ESWS pump supplies flow to both cells of an operating ESWS cooling tower during normal plant operation. Table 3.4-1 provides system flow rates and the expected heat duty for various operating modes of the ESWS cooling towers. The ESWS cooling towers are designed to maintain a maximum 92°F (33°C) return temperature to the ESWS heat exchangers during normal operation (95°F (35°C) during both design basis accident and severe accident conditions, and 90°F (32°C) during Shutdown/Cooldown). Temperature rise through the ESWS heat exchangers will be approximately 17°F (9°C) during normal operation and 19°F (11°C) during cooldown operation based on the heat transfer rates defined in Table 3.4-1. Blowdown from the ESWS cooling towers is mixed with CWS blowdown. The ESWS cooling towers are located on either side of the power block (two ESWS cooling towers per side), to provide spatial separation, with each ESWS cooling tower occupying an area of approximately 0.19 acres (0.077 hectares). The noise levels generated by the ESWS

© 2007 UniStar Nuclear Services, LLC. All rights reserved.
COPYRIGHT PROTECTED

cooling towers is approximately 65 dBA or less at the distance of approximately 1,300 feet (396 m) from the cooling towers. The State of Maryland stipulates noise limits based on the classification of the receiving land (55 dBA Ldn for residential land). Ldn is a calculated day-night time average noise level based on an hourly average of the equivalent noise level (Leq) over a 24 hour period. As a rule of thumb for a continuously and invariant operating noise source, the Ldn value is 6.4 dB higher than the average Leq value. The Leq noise limit is therefore 55 dBA to 6.4 dB (or 49.6 dBA). Based on distance losses, the 49.6 dBA (Leq) noise limit will be met within a 7,700 ft (2,347 m) radius from the towers. Table 3.4-3 provides specifications of the ESWS cooling towers. Figure 3.1-6 provides a preliminary layout for the ESWS cooling towers.

3.4.3 REFERENCES

BGE, 1970. Environmental Report, Calvert Cliffs Nuclear Power Plant, Baltimore Gas and Electric, 1970.

CGG, 2005. Proposal for Information Collection with 316(b) Phase II Requirements of the Clean Water Act for Calvert Cliffs Nuclear Power Plant, Constellation Generation Group, 2005.

NRC, 1976. Ultimate Heat Sink for Nuclear Power Plants, Regulatory Guide 1.27, Revision 2, Nuclear Regulatory Commission, January 1976.

© 2007 UniStar Nuclear Services, LLC. All rights reserved.
COPYRIGHT PROTECTED

Table 3.4-1—Minimal and Nominal Essential Service Water System Flows and Heat Loads at Different Operation Modes Per Train

	Minimum Flow (gpm / lpm)*	Nominal Flow (gpm / lpm)*	Heat Transferred (BTU/hr / Kcal/hr)	Anticipated Number of Trains Operating
Normal Operation (Full Load)	17,340 / 65,639	19,075 / 72,206	165 E6 / 416 E5	2
Cooldown	17,340 / 65,639	19,075 / 72,206	182 E6 / 459 E5	4
Design Basis Accident	17,340 / 65,639	19,075 / 72,206	313 E6 / 789 E5	2
Severe Accident	2,420 / 9,160	2,665 / 10,088	55 E6 / 139 E5	1

Note:

*Based on a mass flow rate (lbm/hr) converted to gpm using water properties at 14.7 psia (101.4 kPa) and 60°F (15.56 °C)

© 2007 UniStar Nuclear Services, LLC. All rights reserved.
COPYRIGHT PROTECTED

Table 3.4-2—Circulating Water System Cooling Tower Design Specifications

Design Conditions	Mechanical Draft Cooling Tower
Number of Towers	1
Heat Load	1.108E10 BTU/hr (2.792E09 Kcal/hr)
Circulating Water	~~777,560~~785,802 gpm (~~2,943,385~~2,974,584 lpm)
Cycles of Concentration—Normal	2
Approximate Dimensions	Height 164 ft (50 m) Overall diameter 528 ft (161 m) (at the base)
Design Dry Bulb Temperature	91.8°F (33.2°C)(summer)/25°F (-3.9°C)(winter)[1]
Design Wet Bulb Temperature	80°F (26.6°C)(summer)/23.3°F (-4.8°C)(winter)
Design Range	28°F (15.6°C)
Design Approach	10°F (5.6°C)
Air Flow Rate (at ambient design point)	66,454,900 acfm (1,881,794 m^3 per min)
Drift Rate	<0.005%[2]

Note:
[1] Based on tower design at 80% relative humidity.
[2] Conservative value used for water balance purposes. Actual value regarding air modelling is 0.0005%.

© 2007 UniStar Nuclear Services, LLC. All rights reserved.
COPYRIGHT PROTECTED

Table 3.4-3—Essential Service Water System Cooling Tower Design Specifications

Design Conditions	Mechanical Draft Cooling Tower
Number of Towers	4
Heat Load	See Table 3.4-1
Essential Service Water	See Table 3.4-1
Cycles of Concentration—normal	~~2~~ 10
Approximate Dimensions	Height96 ft(29 m) Overall length 60 ft(18.29 m) Overall width 60 ft(18.29 m)
Design Dry Bulb Temperature	98.55°F [37°C](summer)/25°F [-3.9°C](winter)[1]
Design Wet Bulb Temperature	81°F [27.2°C](summer)/24.3°F [-4.3°C](winter)[2]
Design Range	18.4°F (10.2°C)
Design Approach	7°F (3.9°C)
Air Flow Rate (at ambient design point)	1,213,000 cfm (3,438 m^3 per min)
Drift Rate	<0.005%

Notes:

[1] Based on tower design at 50% relative humidity
[2] Includes 1°F (0.56°C) for recirculation

© 2007 UniStar Nuclear Services, LLC. All rights reserved.
COPYRIGHT PROTECTED

Figure 3.4-1—General Cooling System Flow Diagram for CCNPP Unit 3

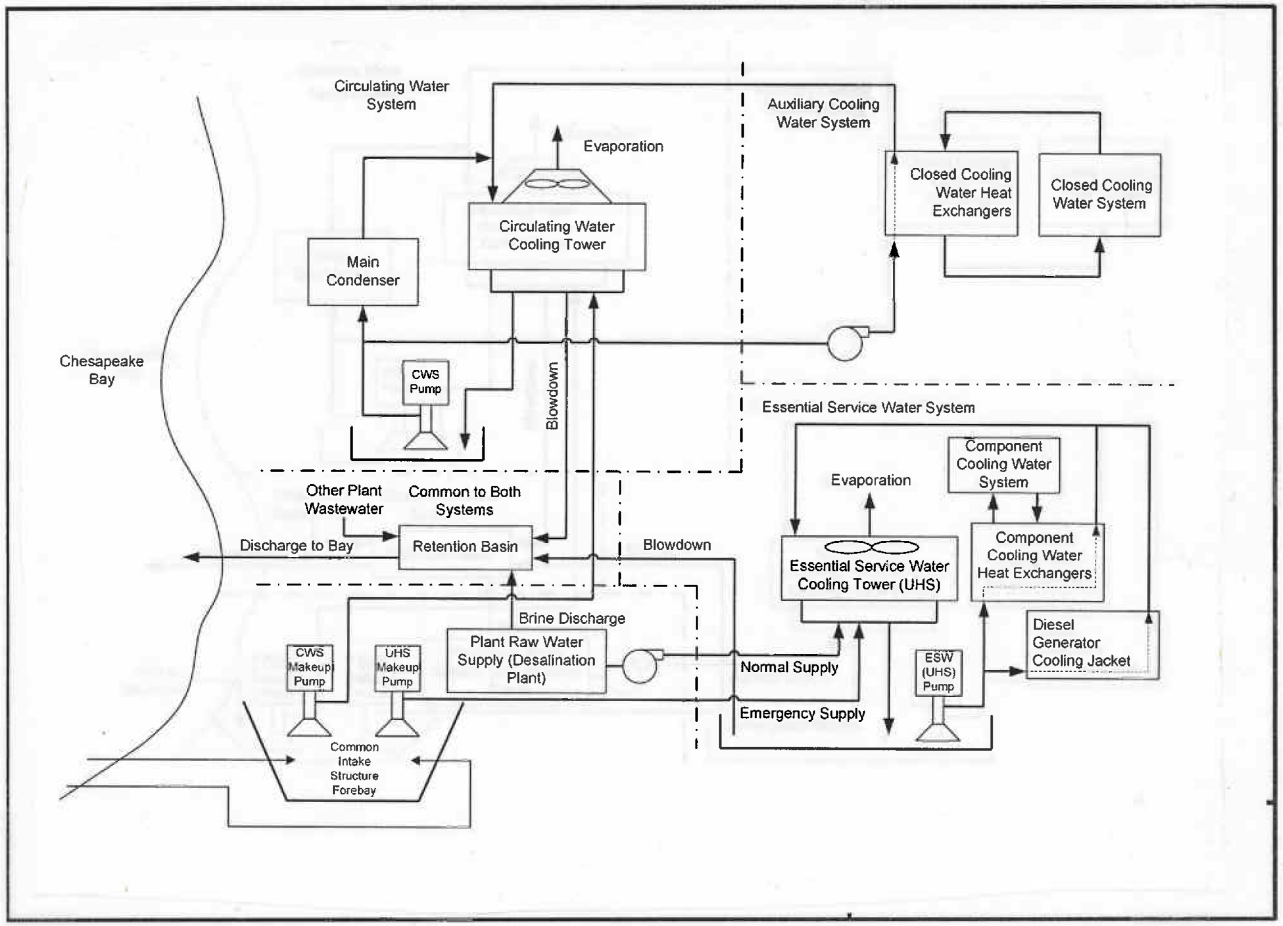

© 2007 UniStar Nuclear Services, LLC. All rights reserved.
COPYRIGHT PROTECTED

Figure 3.4-2—View of Retention Basin for CCNPP Unit 3

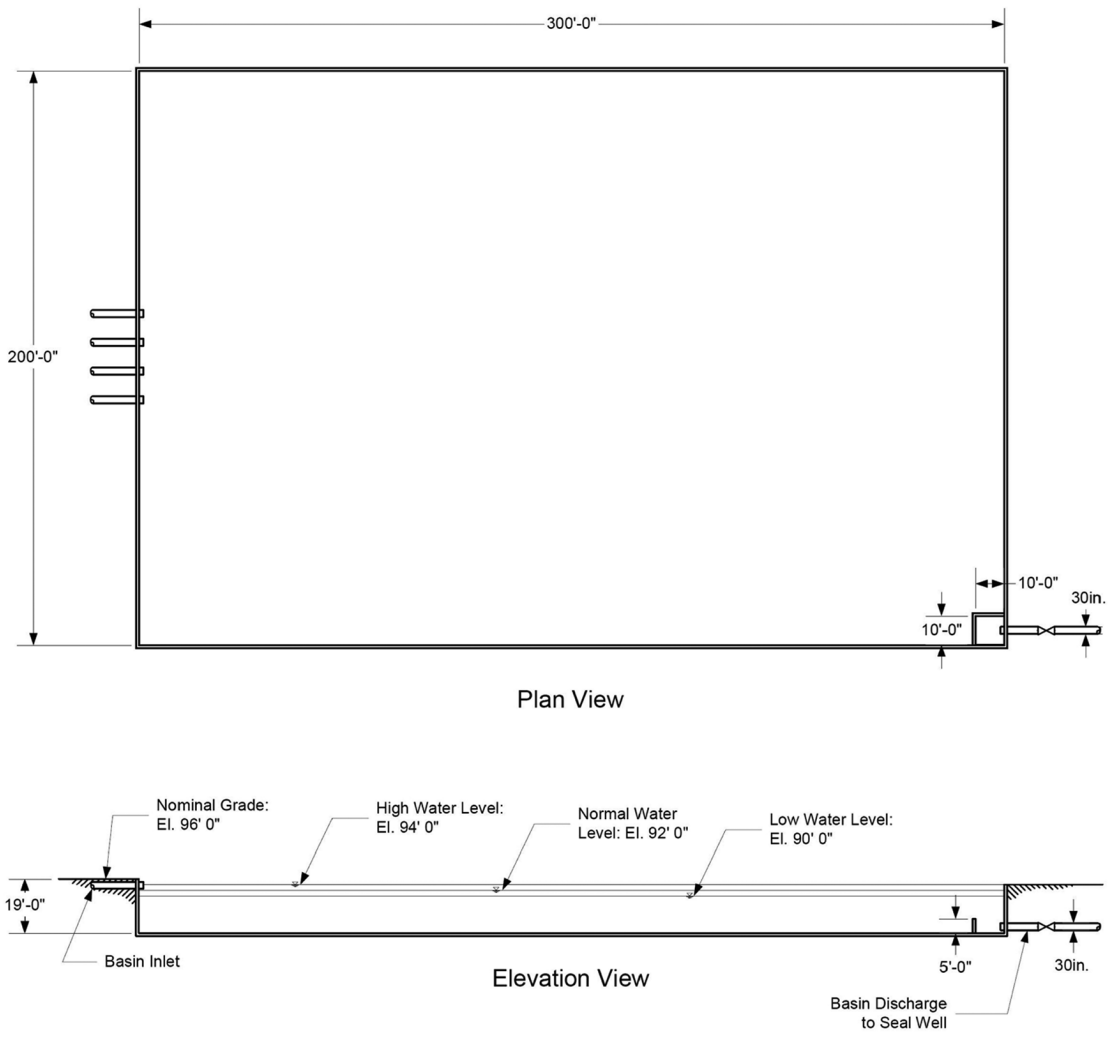

© 2007 UniStar Nuclear Services, LLC. All rights reserved.
COPYRIGHT PROTECTED

Figure 3.4-3—Circulating Water Intake/Discharge Structure Location Plan for CCNPP Unit 3

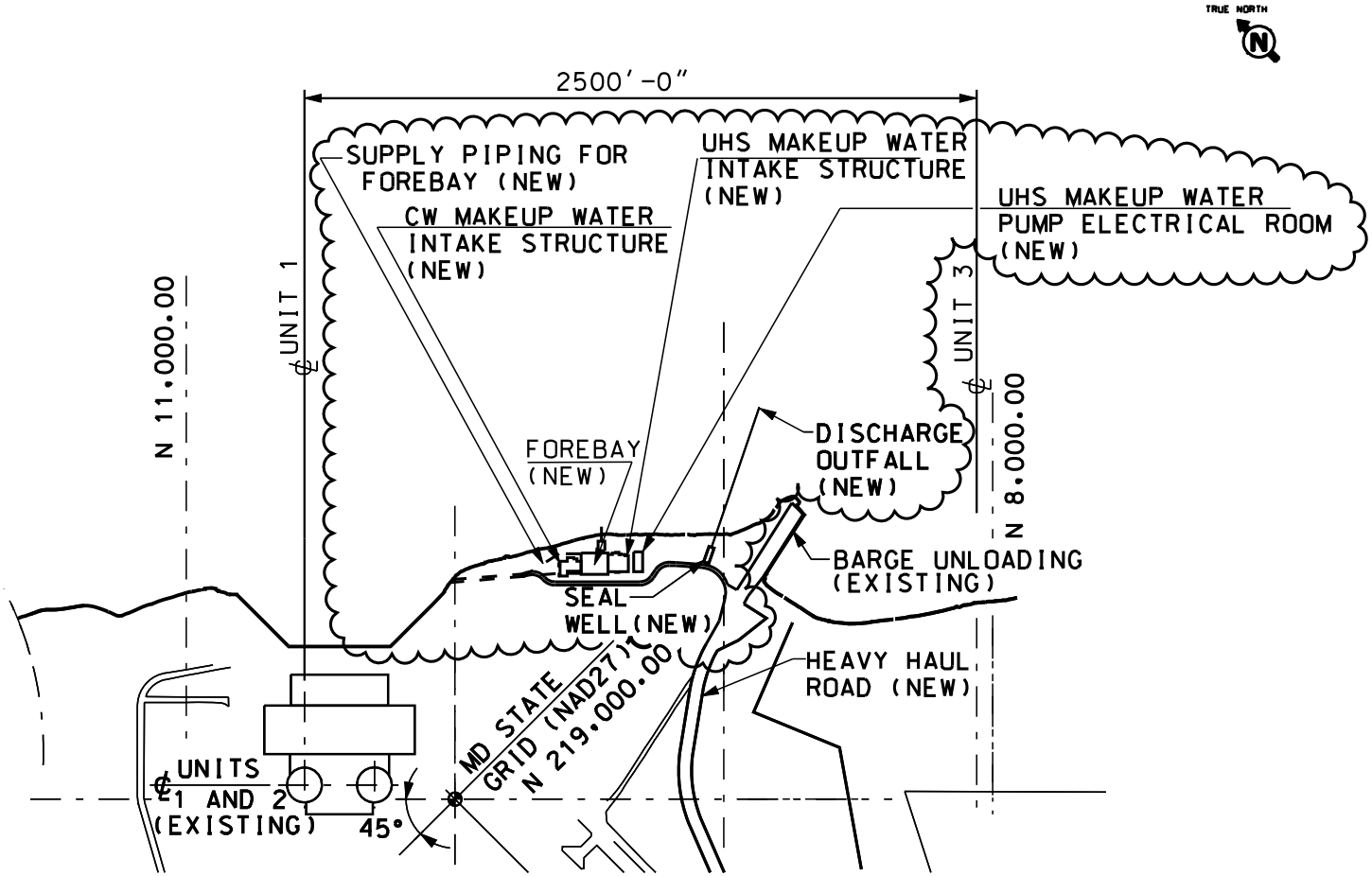

© 2007 UniStar Nuclear Services, LLC. All rights reserved.
COPYRIGHT PROTECTED

Figure 3.4-4—Plan View of Chesapeake Bay Intake System for CCNPP Unit 3

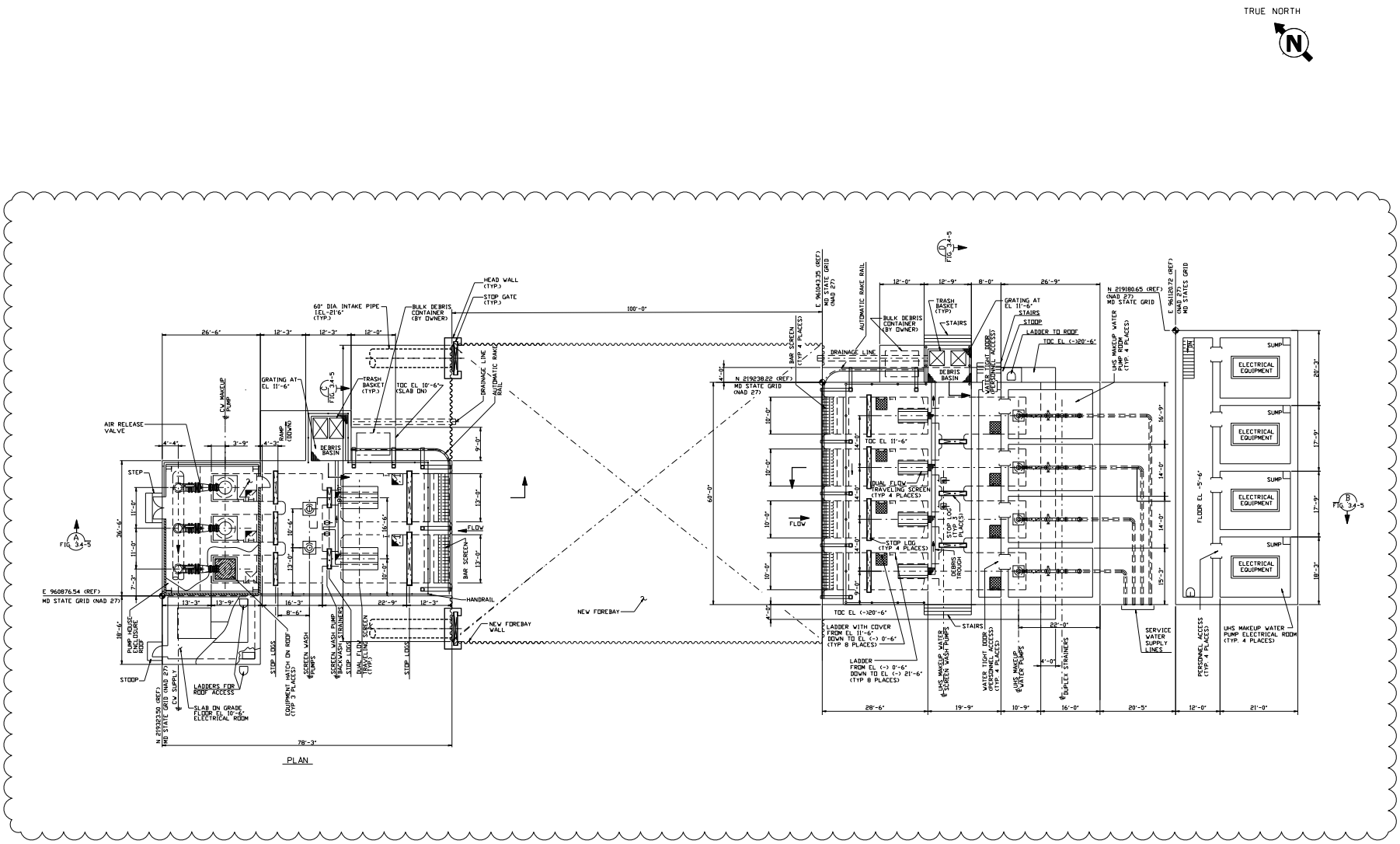

© 2007 UniStar Nuclear Services, LLC. All rights reserved.
COPYRIGHT PROTECTED

Figure 3.4-5—Section View of Chesapeake Bay Intake System for CCNPP Unit 3

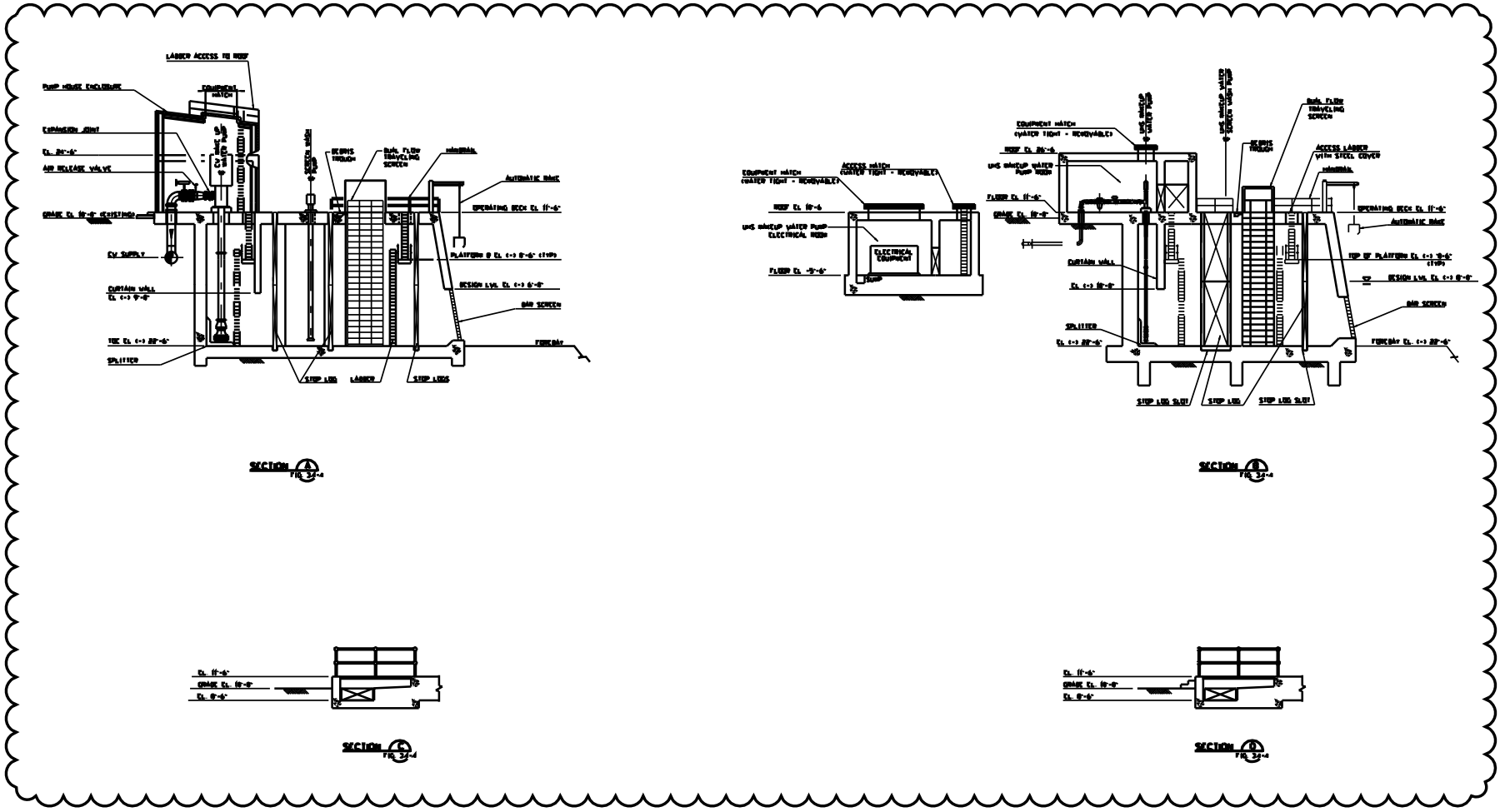

© 2007 UniStar Nuclear Services, LLC. All rights reserved.
COPYRIGHT PROTECTED

Figure 3.4-6—View of Seal Well for Discharge System for CCNPP Unit 3

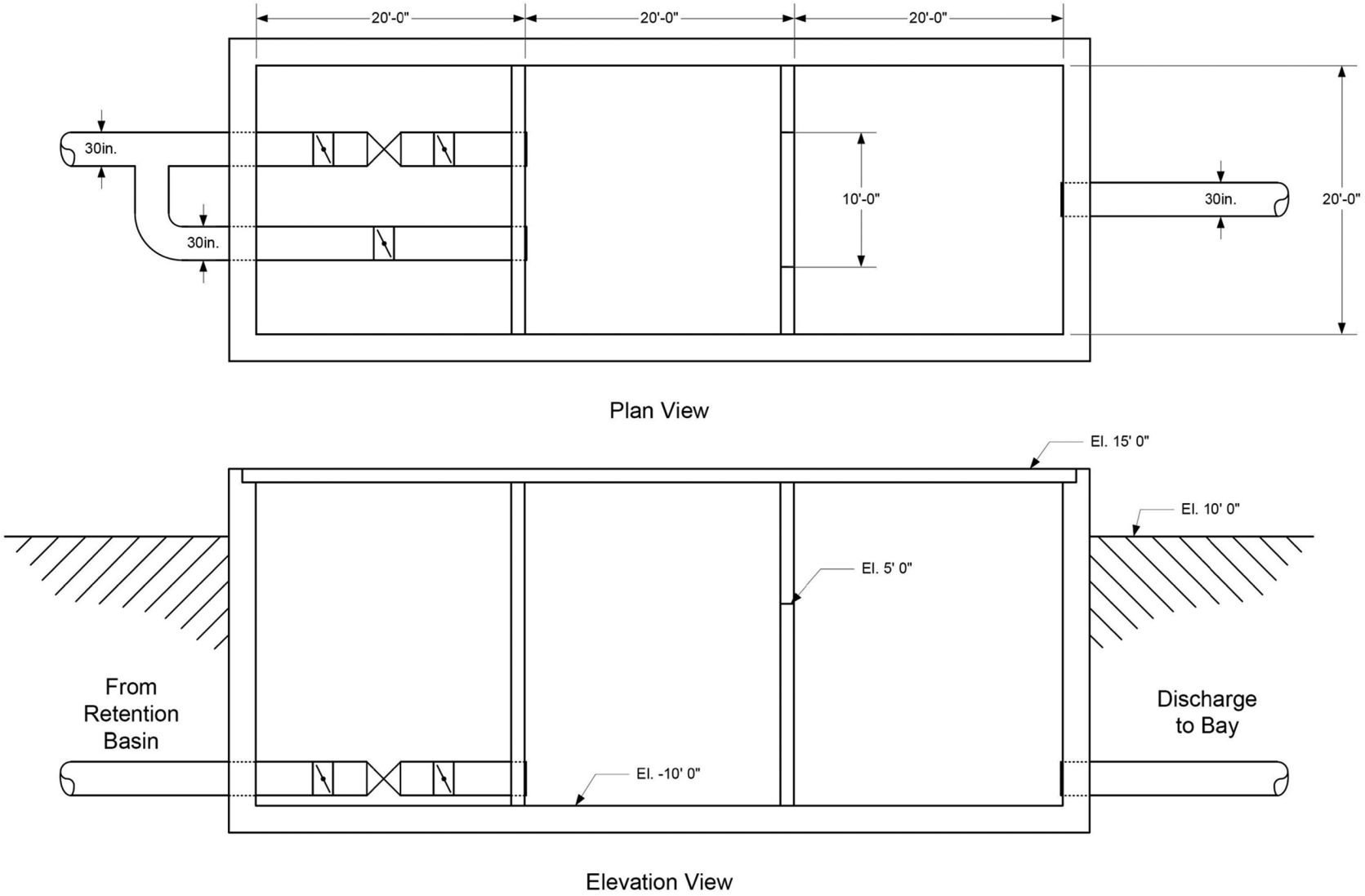

© 2007 UniStar Nuclear Services, LLC. All rights reserved.
COPYRIGHT PROTECTED

Figure 3.4-7—View of New Discharge Outfall for Discharge System for CCNPP Unit 3

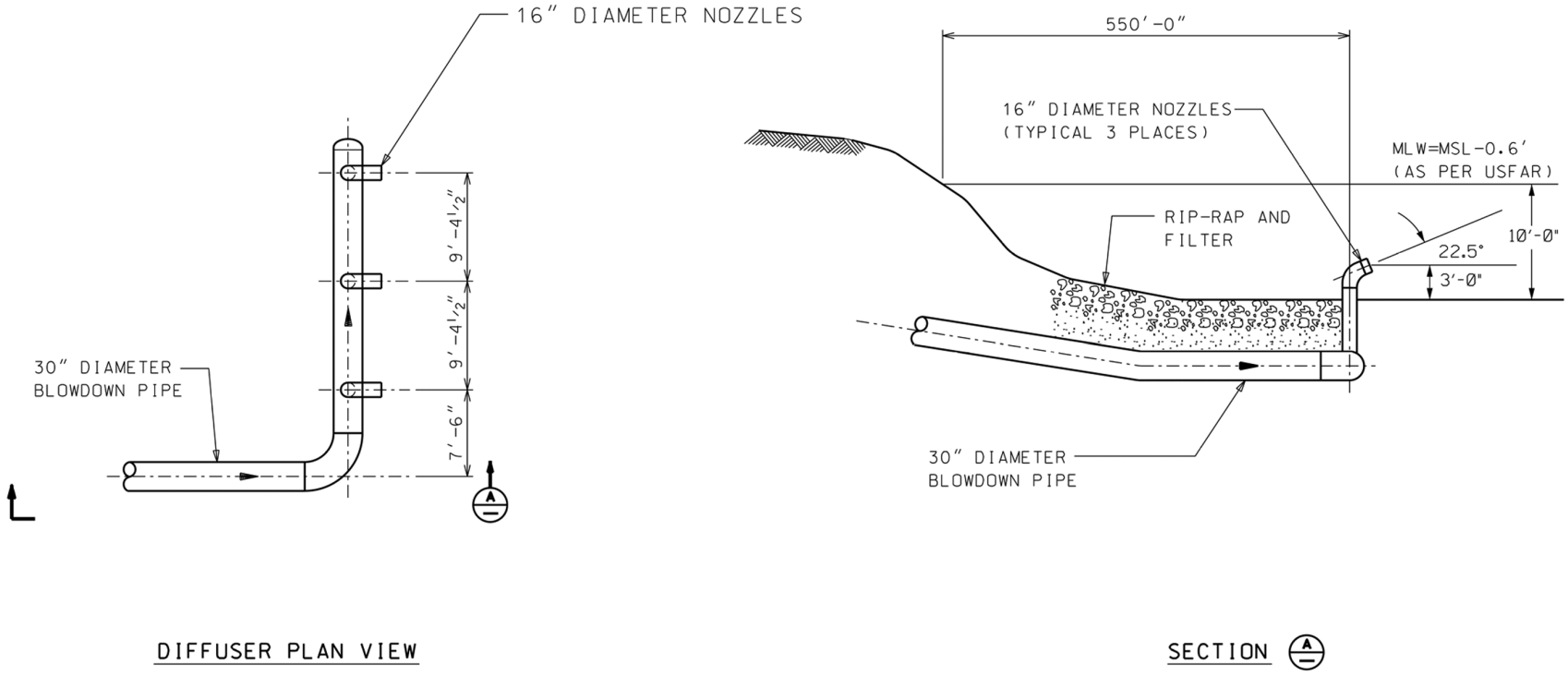

© 2007 UniStar Nuclear Services, LLC. All rights reserved.
COPYRIGHT PROTECTED

Figure 3.4-8—Main Cooling Tower Elevation View

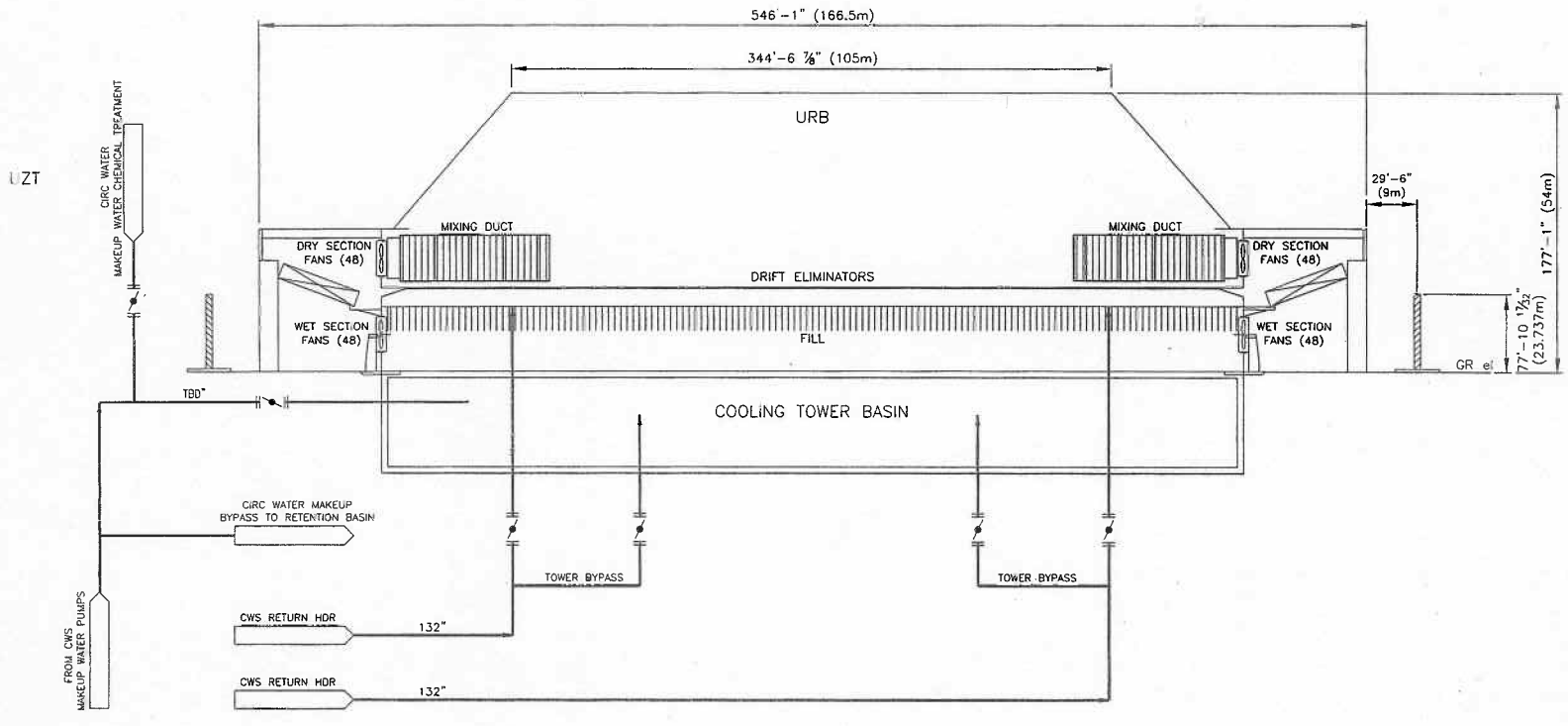

© 2007 UniStar Nuclear Services, LLC. All rights reserved.
COPYRIGHT PROTECTED

3.5 RADWASTE SYSTEMS AND SOURCE TERM

The generation of power within the reactor results in the presence of radioactive materials in various forms and quantities within the reactor core, reactor coolant system and associated systems and components. The vast majority of the radioactivity produced (fission products) is completely contained within the clad fuel rods and is therefore not available for release to fluid systems or to the environment. However, if imperfections in the cladding are present a small fraction of these fission products escapes from the affected fuel rods to the reactor coolant. The other main source of radioactivity to the reactor coolant is the corrosion of primary system surfaces and irradiation of the corrosion products within the reactor core.

Fission and activated corrosion product radionuclides within the reactor coolant system constitute the source of radioactivity to associated systems and components. This radioactivity appears in letdown and leakage from these systems and components which, in turn, forms the source of radioactivity in liquid and gaseous discharges from the plant site and in solid waste materials generated within the plant. System effluents are collected, processed, monitored and directed for either reuse or release to the environment by the radioactive waste treatment systems. Solid radioactive wastes are collected and packaged for temporary storage, shipment and offsite disposal.

The design and operational objectives of the CCNPP Unit 3 radioactive waste treatment systems are to maintain, during normal operation, the radioactivity content of liquid and gaseous effluents from the site such that the dose guidelines expressed in Appendix I to 10 CFR Part 50 (10 CFR 50.34a) (CFR, 2007a), 40 CFR Part 190 (CFR, 2007b), and 10 CFR 20.1301(d) (CFR, 2007c) are met. The following descriptions of the design and operation of the radioactive waste treatment systems and presentations of the estimated radioactivity content of plant effluents serve to quantify the magnitudes and characteristics of the releases. These releases are then used as the sources for the radiological environmental impact analyses during normal operation, which are presented in Section 5.4 and demonstrate that the radioactive waste treatment systems are designed to keep doses to the public as low as reasonably achievable (ALARA). The dose to the public from radwaste systems during plant operation will meet the dose limits for individual members of the public as specified in 10 CFR 20.1301 (CFR, 2007c).

3.5.1 SOURCE TERMS

Source terms used in the evaluation of radwaste systems and effluent releases are discussed in this section. A power level of 4,612 MW(t) is used to calculate source terms based on the guaranteed core thermal output of 4,590 MW(t) plus a 22 MW(t) (approximately 0.5%) uncertainty allowance for heat balance measurements.

3.5.1.1 Primary Coolant Source Term

Two sets of source terms (reactor coolant radionuclide concentrations) have been determined. The first is a conservative design basis used for waste system performance calculations. This source term is based on the assumption that the primary coolant radionuclide concentrations are made up of a combination of proposed technical specification limits for halogens (1 µCi/gm Dose Equivalent (DE)-I-131 in primary coolant) and noble gases (210 µCi/gm DE-Xe133). Activation products and tritium are derived from the ANSI/ANS 18.1-1999 standard (ANS, 1999). Since the activated corrosion products are independent of failed fuel fraction, design basis and realistic basis concentrations are assumed to be the same. Design basis values for the remaining fission product radionuclides are calculated based on a 1.0% failed fuel fraction. The mathematical model used is described in Section 11.1 of the U.S. EPR Final Safety Analysis Report (FSAR). Table 3.5-1 lists key design basis parameters used in the source term calculation for the primary coolant. Table 3.5-2 summarizes the design basis reactor coolant concentration results. Design basis secondary

© 2007 UniStar Nuclear Services, LLC. All rights reserved.
COPYRIGHT PROTECTED

coolant concentrations are based on an assumed primary to secondary leak rate totaling 600 gpd (2,271 L/d) from all four steam generators. Table 3.5-3 summarizes the secondary coolant liquid and steam phase radioactivity concentrations for design basis conditions.

The second source term is based on a realistic model in which the reactor coolant radionuclide concentrations are based on observed industry experience. The model used is described in Regulatory Guide 1.112 (NRC, 1976a), with the source term calculated using NUREG-0017, Revision 1 (NRC, 1985), which contains the Nuclear Regulatory Commission Pressurized Water Reactor (PWR) Gale Code, revised 1985. Specific parameters used in the calculation are provided in Table 3.5-3.

The resulting radioactivity concentrations in the reactor coolant are listed in Table 3.5-2. The inventories calculated in this manner represent "expected basis" activities and are used for the evaluation of environmental impact during routine operation, including anticipated operational occurrences. The data presented in Table 3.5-2 do not include a shutdown iodine spike. Design basis accident analyses include iodine spikes and are discussed in Section 7.1.

Tritium is produced in the reactor mainly through the interaction of neutrons with soluble boron in the coolant. Additional contributions come from the ternary fissions and from the interaction of neutrons with burnable poison rods, lithium and deuterium. Some of the tritium formed within fuel materials will be present in the reactor coolant due to diffusion and leakage through the fuel cladding. For the U.S. EPR design, the expected tritium production rate in the Reactor Coolant System is 1,840 Ci/yr (6.81E+13 Bq/yr). The concentration of tritium in the reactor coolant is provided in Table 3.5-2.

Radioactivity enters the spent fuel pool due to contamination by reactor coolant during refueling operations and possible fission product releases from spent fuel during the storage period. These radionuclides are continuously removed through the spent fuel pool purification train and the building ventilation filtration system. Therefore, the radioactivity in the spent fuel pool area is not a major source of environmental releases (except for tritium and noble gases). Activity concentrations in the fuel pool and atmosphere are listed in Table 3.5-4.

3.5.1.2 Transported Source Terms

The radioactivity in the reactor is transported to various locations in the plant through plant fluid systems and leakages. A schematic diagram of the radwaste effluent flow paths is provided on Figure 3.5-1.

Normal plant operation is anticipated to result in a certain degree of radioactivity within the secondary coolant systems through primary-to-secondary steam generator tube leakage. With steam generator tube defects present, radioactivity will be released to the environment through steam leakage, condensate leakage, and main condenser off gases. The concentrations of radionuclides in the secondary coolant system are based on ANSI/ANS-18.1-1999 (ANS, 1999) for the reference PWR with U-tube steam generators. The results are shown in Table 3.5-3. The radioactivity present in the reactor coolant and secondary coolant are further transported through various radwaste systems and become source terms for environmental releases.

Liquid Source Terms

The following sources are considered in calculating the release of radioactive materials in liquid effluents from normal operations;

1. Processed water generated from the boron recovery system to maintain plant water balance and for tritium control,

© 2007 UniStar Nuclear Services, LLC. All rights reserved.
COPYRIGHT PROTECTED

2. Processed liquid waste from the containment building sump, floor drains from the auxiliary building, spent fuel building and radwaste building, laboratory drains, sampling drains, and other controlled area drains, and miscellaneous waste,

3. Unprocessed liquid waste from the turbine building floor drain sumps.

The radioactivity input to the liquid radwaste treatment system is based on the flow rates of the liquid waste streams and their radioactivity levels expressed as a fraction of the primary coolant activity. Table 3.5-6 shows the liquid waste flow rate and activity level. The table indicates radioactivity in each stream as a fraction of primary coolant activity prior to treatment and the decontamination factors applied to waste processing and effective decay time while passing through treatment systems.

Isotopic distribution for various waste streams is shown in Table 3.5-5 for the liquid waste system.

Gaseous Source Terms

The following sources are considered in calculating the releases of radioactive materials (noble gases, iodines and particulates) in gaseous effluents from normal operation:

- Containment purges (continuous)
- Non-condensable gases from the gaseous waste system
- Nuclear auxiliary building(s) ventilation
- Radwaste, Spent Fuel and Safeguard Buildings, Ventilation
- Turbine building ventilation
- Main condenser evacuation exhaust

Any leakage of primary coolant or the process stream either in the containment or in the auxiliary buildings are collected in the buildings and vented through filtration systems to the environment. Any steam/water leakages in the turbine building are directly vented to the environment. The non-condensable gases will be also discharged through the main condenser evacuation system exhaust to the plant stack.

The estimated releases, by isotope, from each source are shown in Table 3.5-7 for normal operation. This table is based on the expected basis source term information presented above, assumptions and parameters in Table 3.5-6.

Solid Source Terms

The following sources are considered in calculating the solid waste generated within the plant. Solidified radioactive waste results from the processing of materials from the following sources:

1. Evaporator concentrates from:

   Liquid waste evaporator

   Boron recovery evaporator

© 2007 UniStar Nuclear Services, LLC. All rights reserved.
COPYRIGHT PROTECTED

Liquid waste centrifuge

2. Spent resin from:

   Spent fuel pool demineralizer

   Reactor coolant purification treatment ion exchangers

   Liquid waste system demineralizers

   Boron recycle system ion exchanger

   Liquid from decontamination solutions

3. Spent radioactive filter cartridges from various plant filtering systems and other solid non-compressible radioactive waste.

In addition to solid materials extracted from liquid processing systems, dry active waste (DAW) solids are also generated as the result of collecting low activity compressible waste such as paper, rags (cloth) and polyethylene bags from inside the radiation control area. Non-compressible DAW can include such materials as scrap metal, glass, wood, and soil. Table 3.5-10 summarizes as bounding estimates the annual solid wastes generated.

3.5.2 RADIOACTIVE LIQUID PROCESSING SYSTEMS

The primary design functions of the Liquid Waste Storage System and the Liquid Waste Processing System are to receive radioactive liquid wastes collected from the various systems and buildings in which they were generated, to process those liquid wastes in a manner that reduces the activity present in the aggregate liquid wastes such that discharges to the environment can be controlled to stay below 10 CFR 20, Appendix B, Table 2 concentration limits (CFR, 2007d), and the ALARA design dose objectives of 10 CFR 50, Appendix I (CFR, 2007a) for members of the public. Discharges to the environment must also meet state and federal limits specified in discharge permits.

Normal plant operation also has the potential to result in a certain degree of radioactivity within the secondary coolant systems due to primary-to-secondary steam generator tube leakage. Blowdown and leakage of secondary coolant then constitutes radioactive liquid sources, the radioactivity contents of which are reduced and/ or accounted for by the steam generator blowdown processing system and the condensate leakage collection system.

Figure 3.5-2 provides a simplified drawing of the Liquid Waste Storage System and the Liquid Waste Processing System. The discussions that follow describe the design and operation of each of these systems with greater details found in Section 11.2 of the U.S. EPR FSAR. Figure 3.5-3 provides a simplified drawing of the liquid waste treatment system showing the evaporator and centrifuge. Figure 3.5-4 provides a simplified drawing of the Liquid Waste Treatment System showing the vendor supplied demineralizer system.

3.5.2.1 Liquid Waste System

The U.S. EPR Liquid Waste Storage System and Liquid Waste Processing System are used to manage liquid wastes generated by the plant during all modes of operation. The Liquid Waste Storage System collects and segregates incoming waste streams, provides initial chemical treatment of those wastes and delivers them to one or more of the processing systems. The

© 2007 UniStar Nuclear Services, LLC. All rights reserved.
COPYRIGHT PROTECTED

Liquid Waste Processing System uses evaporation, centrifugal separation, or demineralization and filtration to separate the waste water from the radioactive and chemical contaminants, and to concentrate those contaminants. The cleaned water is returned to one of two waste monitoring tanks in the liquid waste storage system where it is isolated and recirculated to ensure representative samples can be taken and analyzed prior to release to the environment. Once the monitoring tank contents are deemed suitable to be released, the processed liquid is discharged from the monitoring tank to the Chesapeake Bay via a discharge line with a radiation monitor that will stop the release if unexpected or high radioactivity is detected. The radwaste discharge line for CCNPP Unit 3 connects to the cooling tower retention basin discharge line downstream of the basin for added dilution flow before release in the Chesapeake Bay via an off-shore submerged multi-port (three) discharge nozzle arrangement. The concentrates are also returned to the Liquid Waste Storage System for further concentration and eventual transfer to the radioactive concentrates processing system.

The Liquid Waste Storage System collects liquid wastes from the plant, segregates the wastes based on their expected radioactivity and chemical composition, and stores them in the liquid waste storage tanks accordingly.

Group I wastes are those liquid wastes expected to contain radioactivity and boron, but little or no organic and inorganic substances or solids. Sources of Group I liquid wastes include:

- water from the Fuel Pool Cooling System and Fuel Pool Purification System transferred through the floor drains of the Nuclear Auxiliary Building
- liquid waste from decontamination systems
- waste water from sampling and from process drains and sumps collected in the Nuclear Auxiliary Building
- waste water drained from the evaporator column in the Liquid Waste Processing System
- waste water decanted from the concentrate tanks and waste water returned from the radioactive concentrates processing system
- waste water collected from the floor drains of the radioactive waste processing building

Group I wastes are directed to the Group I liquid waste storage tanks.

Group II wastes are those liquid wastes expected to contain low levels of radioactivity, along with organic and inorganic substances and some solids. Sources of Group II liquid wastes include:

- waste water collected from floor drains and sumps of the Nuclear Auxiliary Building
- waste water from the hot laboratory transferred through the sumps of the Nuclear Auxiliary Building
- waste water from the showers and washrooms in the Nuclear Auxiliary Building
- distillate from the Reactor Coolant Treatment System

© 2007 UniStar Nuclear Services, LLC. All rights reserved.
COPYRIGHT PROTECTED

- treated water returned from the centrifugal separator in the Liquid Waste Processing System

Provisions exist for collection of Group II wastes from the Steam Generator Blowdown Demineralizing System flushing water. Group II wastes are directed to the Group II liquid waste storage tanks.

Group III wastes are those liquid wastes expected to contain no radioactivity, but some organic or inorganic chemicals, under normal plant operating conditions. Group III waste collection headers are shared with some of the Group II collection headers; the wastes carried in these headers normally are directed to the Group III liquid waste storage tank provided that there are no indications that the waste water contains radioactivity. The "shared" sources are the wastes from the Steam Generator Blowdown Demineralizing System flushing water, and treated water returned from the centrifugal separator in the Liquid Waste Processing System. Provisions also exist for the collection of wastes from some of the floor drains in the radioactive waste processing building.

Since Group III waste liquids normally will have very little or no radioactivity, several of the Group III waste water streams may be routed directly to the monitor tanks in the liquid waste storage system. The Steam Generator Blowdown Demineralizing System flushing water wastes, and the treated water returned from the centrifuge separator in the Liquid Waste Processing System each can be routed directly to the monitor tanks instead of the Group III liquid waste storage tank.

The Liquid Waste Storage System and the Liquid Waste Processing System operate independently of the operating modes of the plant. The systems provide sufficient storage and treatment capacity to process the daily inputs produced during all plant startup, normal operation, plant shutdown, maintenance, and refueling periods. The systems are operated on an as-needed basis throughout the plant operating cycle. From operating experience, the peak volume demand occurs during plant outages, when increased volumes of waste water, in particular the Group II waste water streams, are generated by increased maintenance activities.

The liquid waste storage system includes liquid waste storage tanks, concentrates tanks, and monitoring tanks which temporarily store the liquid wastes at various stages of treatment. It also includes recirculation pumps, a sludge pump, a concentrates pump, and recirculation/discharge pumps to move the liquid waste between the various tanks. Chemical tanks and chemical proportioning pumps are included to permit the precise mixing and injection of chemicals to treat the liquid waste. Piping and control valves route the liquid wastes between the different tanks and pumps, as well as to several interfaces with the liquid waste processing system.

The liquid waste processing system consists of three separate sections. The evaporator section employs a vapor-compressor type evaporator with a separate evaporator column. The evaporator section also includes evaporator feed pumps, a forced recirculation pump, and a distillate pump to move liquid waste through the evaporation process, several heat exchangers to condition the liquid waste at various stages of the process, and a distillate tank to collect the treated waste water for return to the Liquid Waste Storage System.

The centrifuge section employs both a decanter and a centrifugal separator to separate organic and inorganic contaminants from the waste water. The contaminant 'sludge' is collected in a sludge tank, then pumped to a waste drum for collection and processing as solid waste. The treated water is returned to the Liquid Waste Storage System.

© 2007 UniStar Nuclear Services, LLC. All rights reserved.
COPYRIGHT PROTECTED

The demineralizer and filtration section includes a demineralizer and an ultra-filtration unit. Piping and control valves allow liquid wastes to be passed through either unit or through both units consecutively; contaminants are retained and the cleaned waste water is returned to the Liquid Waste Storage System.

The capacity of the Liquid Waste Processing System is sufficient to process the average quantity of liquid wastes produced weekly in less than half that period of time. The Liquid Waste Processing System consists of three different subsystems, each of which applies a unique process to concentrate and remove radioactive material from liquid wastes. The processes used are evaporation, centrifugal separation, and demineralization/filtration. Because they contains little or no organics and solids, the Group I wastes are processed by evaporation. The evaporator design provides for a flow that is sufficient to allow processing of 1,050 g/h (3,975 l/hr). This is sufficient capacity to process the entire weekly Group I liquid waste volume in slightly more than 25 hours. Because they contain organics and solids, but little or no activity, the Group II and III waste streams are processed by centrifugal separator. The separator is capable of processing approximately 1,300 g/h (4,921 l/hr). This is sufficient capacity to process the entire weekly Group II and Group III liquid waste volume in 63 hours. The demineralizer is capable of processing approximately 2,400 g/h (9,084 l/hr) of liquid waste. This is sufficient to process the combined weekly volume of the Group I, II, and III waste streams in about 40 hours.

Both the Liquid Waste Storage System and the Liquid Waste Processing System are located entirely within the radioactive waste processing building. Interfacing system piping delivers influent liquid wastes that originate in the plant drains with potential to contain liquid radioactive waste. Table 3.5-11 lists the storage capacity for each of the liquid waste collection and process tanks. Table 3.5-11 provides expected process rates for components in the waste processing system. Table 3.5-8 provides the flow rates and activity for each main grouping of liquid radioactive waste.

Coolant Treatment System

Normal operating modes of the Coolant Treatment System purify and recycle reactor coolant and separate boron for reuse. However, the control of tritium levels in the Reactor Coolant System necessitates the periodic discharge of reactor coolant letdown after processing by the Coolant Treatment System for the removal of boron and the degasification of noble gas activity. The volume of processed reactor coolant to be discharged from the plant is administratively controlled to maintain tritium concentrations in the coolant system within a selected range. This processed liquid is discharged to the Liquid Waste Storage System and the Liquid Waste Processing System before being released to the environment instead of being recycled. This treatment option is performed in order to maintain reactor coolant tritium levels such that personnel exposures during containment entry during both power operation and refueling shutdowns is not unduly limited.

Steam Generator Blowdown Processing System

Control of the steam generator secondary side liquid chemistry is achieved by blowdown and demineralized water makeup. The radioactivity content of this blowdown is dependent on reactor coolant radioactivity levels and the primary-to-secondary leakage rate. The estimated average primary-to-secondary steam generator tube leakage reflected in the GALE source term estimates is 75 lb per day (34 kg per day) (NRC, 1985). The steam generator secondary side blowdown rate associated with this leakage level is 218,400 lbm/hr (99,065 kgm/hr) total for all four steam generators.

The blowdown liquid is routed to the blowdown flash tank. As a result of pressure reduction, approximately 29% of the liquid mass flashes to steam. The steam-water mixture is separated

© 2007 UniStar Nuclear Services, LLC. All rights reserved.
COPYRIGHT PROTECTED

in the flash tank. The overhead steam is directed to the deaerator (also called the feedwater tank). The remaining 71% of the flash tank inlet mass (liquid condensate) is routed through two stages of letdown cooling before being processed by the Steam Generator Blowdown Demineralizer System located in the Nuclear Auxiliary Building for cleanup and return to the turbine condenser.

Secondary System Condensate Leakage Collection and Discharge

With radioactivity present in the secondary sides of the steam generators, moisture carryover brings some radioactivity to the remainder of the secondary coolant system. Consequently, leakage of secondary system condensate forms a potential radioactive liquid release source. The amount of radioactivity reaching condensate leakage points is minimized by the high quality of the steam exiting the steam generators so that no processing of condensate leakage before discharge is required. The estimated average volumetric generation rate of this liquid is 5 gpm (19 lpm) at main steam activity. This liquid is discharged from the plant unprocessed, which results in an estimated annual release of 0.00033 curies/yr (1.2E+7 Bq/yr), not including tritium. A central collection point within turbine building is provided to allow sampling and analysis for radioactivity content. The liquid is released from the plant via a monitored pathway (with alarm and trip function on detected high radioactivity) to a waste water retention basin before release to the Chesapeake Bay.

It is assumed, per the GALE code, that the turbine building floor drains will collect leakage of 7,200 gpd (27,255 lpd) at main steam activity (NRC, 1985). The leakage collected in the floor drain sump is directly discharged to the environment without treatment. Should monitors detect excess radiation in the sump, the sump is isolated for evaluation.

3.5.2.2 Liquid Release to the Environment

The radioactivity inputs to the liquid waste system release calculations are provided in Table 3.5-~~8~~14. The expected annual liquid release source terms based on the GALE code model of the U.S. EPR are summarized in Table 3.5-~~5~~7.

Releases from Anticipated Operational Occurrences

Annual average radioactivity releases through liquid effluents are summarized in Table 3.5-~~8~~15. The additional unplanned liquid release due to anticipated operational occurrences is estimated to be 0.16 Ci/year for the U.S. EPR design based on reactor operating data presented in NUREG 0017 (NRC, 1985). These releases were evaluated to determine the frequency and extent of unplanned liquid release and are assumed to have the same isotopic distributions for the calculated source term of the liquid wastes. The total releases from the anticipated operational occurrences are shown in Table 3.5-~~8~~16 and are included as part of the "total liquid release source term".

Summary of Radioactive Liquid Release from Normal Operations

Discharge concentrations are listed in Table 3.5-~~8~~16 and are calculated using a conservative 17,633 gpm (66,748 Lpm) discharge flow rate. The above discharge concentrations are compared with effluent concentration limits given in Table 2, column 2 of 10CFR20, Appendix B (CFR, 2007d).

Due to the impracticality of removing tritium on the scale necessary, some tritium present in the reactor coolant system will be released to the environment during plant life time. From the experiences gained at operating PWRs, the total tritium release is estimated to about 0.4 Curies/MWt/year (NRC, 1985). The quantity of tritium released through the liquid pathway is based on the calculated volume of liquid released, excluding secondary system waste, with a

© 2007 UniStar Nuclear Services, LLC. All rights reserved.
COPYRIGHT PROTECTED

primary coolant tritium concentration of 1 µCi/ml up to a maximum of 0.9 of the total quantity of tritium calculated to be available for release. It is assumed that the remainder of tritium produced is released as a gas from building ventilation exhaust systems. Hence, 1,660 curies (6.14E13 Bq) of tritium are expected to be released to the environment via liquid effluents from the U.S. EPR each year.

3.5.2.3 Liquid Waste System Cost-Benefit Analysis

In addition to meeting the numerical As Low As Reasonably Achievable (ALARA) design objective dose values for effluents released from a light water reactor as stipulated in 10CFR50, Appendix I (CFR, 2007a), the regulation also requires that plant designs include all items of reasonably demonstrated cleanup technology that when added to the liquid waste processing system sequentially and in order of diminishing cost-benefit return, can, at a favorable cost-benefit ratio, effect reductions in dose to the population reasonably expected to be within 50 mi (80 km) of the reactor. Values of $2,000 per person-rem and $2,000 per person-thyroid-rem are used as a favorable cost benefit threshold based on NUREG-1530 (NRC, 1995). The source term for each equipment configuration option was generated using the same GALE code as described in Section 3.5.1 along with the same plant specific parameters modified only to accommodate the changes in waste stream decontamination factor afforded by the design options simulated.

For the U.S. EPR, the dose reduction effects for the sequential addition of the next logical liquid waste processing component (i.e., waste demineralizer) results in a reduction in the 50 mi (80 km) population total body exposure of 0.06 person-rem (0.0006 person-sievert). Section 5.4 describes the population dose calculation for both the base system case of processing liquid waste with an evaporator and centrifuge for Group I and II waste streams, and the augmented system configuration that adds a vendor supplied waste demineralizer for additional processing of the distillate produced by the evaporator and centrifuge. Table 3.5-9 illustrates the relative population dose associated with both base equipment configuration and that associated with the addition of the waste demineralizer subsystem. Table 3.5-17 compares the estimated total body dose reduction or savings achieved for the addition of the demineralizer subsystem along with a conservative estimated cost for the purchase, operating and maintenance (O&M) of the equipment. The cost basis for the equipment option is taken from Regulatory Guide 1.110 (NRC, 1976b) and reported in 1975 non-escalated dollars which provides a conservatively low estimate of the equipment cost to today's dollars. A 60 year operating time frame is used since the U.S. EPR is designed for a 60 year operating life. The site area population within 50 mi (80 km) is based a projected population in 2080, over 60 years from the estimated start of plant operations. Using the population at the end of plant life is conservative in that it maximizes the collective dose from plant effluents.

For the total body dose reduction, Table 3.5-17 illustrates that the favorable benefit in reduced dose associated with the addition of waste demineralizer system had a dollar equivalent benefit value of $7,200. However, the estimated cost to purchase, operate and maintain this equipment over its operating life was approximately $446,000, thereby resulting in a total body effective benefit to cost ratio of less than 1.0 (not justified on an ALARA basis of dose savings to the public).

In consideration of the collective thyroid dose reduction, Table 3.5-10 illustrates that the favorable benefit in reduced dose associated with the addition of waste demineralizer system had a dollar equivalent benefit value of $55,200. However, the estimated cost to purchase, operate and maintain this equipment over its operating life is the same as shown for the total body dose assessment above, approximately $446,000. This result in a thyroid effective benefit to cost ratio of also less than 1.0 (not justified on an ALARA basis of dose savings to the public).

© 2007 UniStar Nuclear Services, LLC. All rights reserved.
COPYRIGHT PROTECTED

In assessing if there are any demonstrated technologies that could be added to the plant design at a favorable cost-benefit ratio, a bounding assessment has also been performed which demonstrates that there is insufficient collective dose available to be saved that would warrant additional equipment cost. For the bounding total body collective dose estimate, if an equipment option could reduce the base case population dose to zero, the maximum potential savings in collective dose would be equivalent to $2,000 per person-rem (reference value for favorable benefit from NUREG-1530 (NRC, 1995)) times the life time integrated total body population dose associated with base condition (i.e., 0.177 person-rem/yr x 60 yrs x $2,000 per person-rem = $21,240). For the thyroid collective dose, the savings would be equivalent to $2,000 per person-rem times the life time integrated thyroid population dose associated with base condition (i.e., 0.682 person-rem/yr x 60 yrs x $2,000 per person-rem = $81,840). The assumption of achieving a zero dose does not take into account that tritium in effluents contribution to the dose and that current available treatment options are ineffective to remove it.

Since the benefit value for both the total body and thyroid to reduce the dose to zero is significantly less than the direct and 60 year O&M cost of the waste demineralizer subsystem option or other options from Regulatory Guide 1.110 (NRC, 1976b) not already incorporated in the plant design, the bounding assessment indicates that there are no likely equipment additions that could be justified on an ALARA basis for liquid waste processing.

It should be noted that even though not warranted on a population dose savings basis, a vendor supplied waste demineralizer subsystem skid has been added to the plant design to provide plant operators greater flexibility to process waste liquids by different processes to best match waste stream characteristics, such as chemical form, with the waste process treatment method that best handles the waste from an economics standpoint.

3.5.3 RADIOACTIVE GASEOUS TREATMENT SYSTEMS

Radioactive gases (such as xenon, krypton and iodine) created as fission products during reactor operation can be released to the reactor coolant through fuel cladding defects along with hydrogen and oxygen that is generated by radiolytic decomposition of the reactor coolant. Since these gases are dissolved in the reactor coolant, they are transported to various systems in the plant by process fluid interchanges. Subsequent reactor coolant leakage releases a portion of these gases and any entrained particulate radioactivity to the ambient building atmosphere.

Fission product and radiolytic decomposition gases released from reactor coolant within the various process systems are handled by the Gaseous Waste Processing System. Radioactive gases or airborne particulates released to the ambient atmosphere in one of the buildings due to system leakage from the process system piping is managed by the combined operation of the Containment Ventilation System, Safeguards Building Controlled Area Ventilation System, Fuel Building Ventilation System, Nuclear Auxiliary Building Ventilation System, and Sampling Activity Monitoring Systems.

3.5.3.1 System Description and Operations

The Gaseous Waste Processing System and sources are provided in Figure 3.5-5. The Gaseous Waste Processing System combines a quasi-closed loop purge section with a discharge path provided through a carbon bed delay section. The purge section recycles the majority of purge gas after it has been processed. This limits the system demand for makeup purge gas, and also limits the amount of gas that must be discharged through the delay section to the environment.

© 2007 UniStar Nuclear Services, LLC. All rights reserved.
COPYRIGHT PROTECTED

The purge section includes waste gas compressors, purge gas pre-driers, several purge gas reducing stations, purge gas supply piping to tanks in a number of interfacing systems, purge gas return piping from those tanks, purge gas driers, recombiners, and gas coolers. The purge section also includes a gas supply subsystem, gas measuring subsystems, and compressor sealing subsystems. The purge gas stream consists of nitrogen with small quantities of hydrogen and oxygen, and trace quantities of noble gas fission products.

The carbon bed delay section includes a gel drier, delay beds, a gas filter, and a discharge gas reducing station. The delay section discharges processed gaseous waste to the Nuclear Auxiliary Building Ventilation System for release to the environment via the ventilation exhaust stack.

All the components of the Gaseous Waste Processing System and the majority of the components of connected systems are located in the Nuclear Auxiliary Building. However, there are some connected components that are continually swept by gaseous waste processing purge gas flow that are located in other buildings. The volume control tank and two of seven nuclear island drain and vent systems primary effluent tanks are located in the Fuel Building. Four more nuclear island drain and vent systems primary effluent tanks are located in the four safeguard buildings. The pressurizer relief tank and the reactor coolant drain tank are located in the Reactor Building. Gaseous Waste Processing System piping is routed among the buildings.

The Gaseous Waste Processing System is designed to operate continuously during normal plant operation. For the majority of this time, with the plant operating at full power, the Gaseous Waste Processing System will operate in a steady state mode, with a constant flow rate (0.19 lbm/sec (0.86 kg/sec)) for two compressors running), through the purge section, and a small (0.00015 lbm/sec (0.068 gm/sec)), constant discharge rate from the delay section. Figure 3.5-6 depicts the Gaseous Waste Treatment System. The U.S. EPR DCD Section 11.3 describes the individual components and design details of the Gaseous Waste Management System.

Normal Operation – Purge Section

The circulation of purge gas is maintained by the operation of one or both waste gas compressors. The Gaseous Waste Processing System operates at positive pressures from the waste gas compressors to the reducing stations and the volume control tank, and at sub-atmospheric pressure downstream of the reducing stations through the various connected tanks and the gaseous radwaste processing equipment that returns the purge flow to the suction of the waste gas compressor.

Radioactive fission product gases are collected from the pressurizer relief tank, the reactor coolant drain tank, and the volume control tank. The primary influent source is expected to be the Coolant Degasification System, which extracts both hydrogen and fission product gases from the reactor coolant on a continuous basis. The other major source of influent to the Gaseous Waste Processing System is the reactor coolant drain tank.

Gaseous Waste Processing System purge gas drawn from the connected components is routed through the gaseous radwaste processing equipment. First, the gas drier treats the returning purge gas. The gas drier uses a cooling process to reduce the moisture content in the purge gas.

The recombiner uses a catalytic process at elevated temperature to recombine the free hydrogen and oxygen entrained in the purge gas stream.

© 2007 UniStar Nuclear Services, LLC. All rights reserved.
COPYRIGHT PROTECTED

The gas cooler cools the purge gas stream at the recombiner outlet. A filter assures that no particulates are carried forward to the waste gas compressor.

The waste gas compressor compresses the incoming purge gas flow, and discharges to the sealing liquid tank.

The sealing liquid tank separates the gaseous and liquid phases from each other. The purge gas leaving the sealing liquid tank is routed to the pre-drier. The pre-drier cools the purge gas to reduce its moisture content by condensation.

The Gaseous Waste Processing System piping branches downstream of the pre-drier, dividing the purge gas flow. One branch supplies purge gas to the pressurizer relief tank and the reactor coolant drain tank. A second branch supplies purge gas flow to the volume control tank. The third branch connects to the delay section.

The purge gas flow in the third branch is joined by the purge gas discharged from the volume control tank, and is then distributed to the four parallel branches. These four paths purge radioactive fission product gases from the coolant supply and storage system tanks, the reactor boron and water makeup system, the coolant purification system, the coolant treatment system, the coolant degasification system, the various nuclear island vent and drain system primary effluent tanks (in the Safeguards Buildings, the Fuel Building, and the Nuclear Auxiliary Building), and the Nuclear Sampling System active liquid samples subsystem.

Normal Operation – Delay Section

Only a small quantity of purge flow is sent to the delay beds under normal operating conditions. The remaining quantity is recycled.

The delay beds retain the radioactive fission product gases that enter the delay section. These gases (e.g. xenon and krypton) are dynamically adsorbed by the activated charcoal media in the delay beds, which provides the residence times required for natural decay. For normal operations, the Xenon and Krypton dynamic adsorption coefficient are 70 cm^3/gm (2,000 in^3/lb) for Krypton and 1,160 cm^3/gm (32,110 in^3/lb) for Xenon, respectively. This equates to an estimated holdup time for Xenon and Krypton of 27.7 days for Xenon and 40 hours for Krypton, respectively.

The delay beds consist of three vertical pressure vessels connected in series which are maintained at a constant positive pressure to improve the adsorption of waste gases in the activated charcoal media. Two moisture sensors are configured in parallel upstream of the delay beds to provide warning and protective interlock signals if the moisture content of waste gas entering the delay beds exceeds acceptable levels. A radiation sensor is also located upstream of the delay beds to monitor influent activity levels. Two pressure sensors monitor pressure upstream of the delay beds to provide warning signals for high or low operating pressure conditions, and to provide protective interlock signals.

Surge Gas Operation

Operations that transfer large quantities of primary coolant in the systems purged by the Gaseous Waste Processing System automatically place the system into surge gas operation mode. The Gaseous Waste Processing System operates in surge gas mode primarily during plant startup or shutdown.

© 2007 UniStar Nuclear Services, LLC. All rights reserved.
COPYRIGHT PROTECTED

Surge Gas Operation – Purge Section

Operation of the Gaseous Waste Processing System purge section is not significantly altered by plant operating mode. Purge flow through the components connected to the Gaseous Waste Processing System continues as in normal operating conditions.

Surge Gas Operation – Delay Section

During conditions of excess gas generation, the flow volume to the delay section automatically increases. This increased flow volume is automatically sensed and shifts the system to surge gas operation mode. Surge gas operation mode automatically stops waste gas releases from the Gaseous Waste Processing System via the Nuclear Auxiliary Building Ventilation System until the system is manually reset.

The capacity of the delay section adapts to the increased flow rate during surge gas operation mode because surge gas mode elevates delay section pressure. Higher pressure increases the storage capacity of the delay section and improves the adsorption capabilities of the activated charcoal.

The delay section maintains the required residence time for natural decay of the fission product gases during surge gas operation mode by virtue of the increased capacity arising from the elevated operating pressure.

Surge gas operation continues for a predetermined period of time sufficient to achieve the required residence times for the fission product gases. When this time period expires, delay section pressure reduction is manually initiated and gradually reduces the pressure in the delay section.

Steam Generator Blowdown Flash Tank Venting

During normal operations, the blowdown liquid is routed to the blowdown flash tank. As a result of pressure reduction, a portion of the liquid mass flashes to steam. The steam-water mixture is separated in the flash tank, with the overhead steam directed to the deaerator (also called the feedwater tank). Non-condensable gases from the deaerator are sent to the main turbine condensers and are removed by the main condenser evacuation system for release to the plant stack.

Radiation sensors on the Steam Generator Blowdown Sampling System continually monitor blowdown activity for indications of a steam generator tube leaks or rupture. If indications of tube rupture are detected, the affected steam generator is automatically isolated from the blowdown flash tank in the Steam Generator Blowdown System. Eventually, after a controlled plant shutdown and cooldown has been completed, the affected steam generator may be drained to the nuclear island vents and drains system, which is one of four normal destinations for steam generator draining (plant drains, clean drains, the condenser and the nuclear island vents and drains).

Main Condenser Evacuation System

The Main Condenser Evacuation System is designed to establish and maintain a vacuum in the condenser during startup, cooldown and normal operation by the use of mechanical vacuum pumps. Vacuum pumps remove air and non-condensable gases from the condenser and connected steam side systems and pass the steam and the air mixture through moisture separators. As a result of compression, the steam component condenses while the extracted air is vented through the vent system into the ventilation system of the Nuclear Auxiliary

© 2007 UniStar Nuclear Services, LLC. All rights reserved.
COPYRIGHT PROTECTED

Building Ventilation System and released to the environment via the plant stack. The activity of the exhausted air is monitored.

Ventilation Filter Systems

Effluent discharged from the delay section of the Gaseous Waste Processing System is directed to the filtration section of the Nuclear Auxiliary Building Ventilation System. Exhaust air from the containment purge "full flow purge" (used only during plant outage periods), along with exhaust air from the Safeguards Building Controlled Area Ventilation, Fuel Pool Building Ventilation, and Nuclear Auxiliary Building Ventilation Systems, is also processed by the filtration section of the Nuclear Auxiliary Building Ventilation System before release from the stack. The ventilation flow paths (including containment "low flow purge" and "full flow purge") continuously exhaust to the Nuclear Auxiliary Building Ventilation System. Each exhaust flow path has a pre-filter and a HEPA filter. The filtered air is sent to the common exhaust plenum and removed via the stack. If radiation sensors in any of the rooms within the Nuclear Auxiliary Building, Reactor Building, Fuel Building, Safeguards Buildings, or the stack detect elevated radioactivity levels in exhaust gases, the associated flow paths are redirected to iodine-adsorbent activated charcoal delay beds and the filtered air is sent to the stack. The charcoal beds each have a downstream HEPA filter to remove potentially radioactive charcoal dust and particulates. The ventilation systems are shown in Figure 3.5-7.

3.5.3.2 Gaseous Release to the Environment

All gaseous effluents are released at the top of the plant stack. The stack height is approximately 197 ft (60 m) above plant grade, or about 6.56 ft (2 m) above the height of the adjacent Reactor Building. The normal stack flow rate is conservatively estimated at 260,000 cfm (7,362 m^3/min) with no credit for thermal buoyancy of the exit gas assumed (ambient temperature) and the low flow purge system assumed to not be operating. The stack diameter is 12.5 ft (3.8 m). The releases of radioactive effluent to the plant stack include contributions from:

- Gaseous Waste Processing System discharges via the carbon delay beds for noble gas holdup and decay.
- Containment purge ventilation discharges.
- Ventilation discharges from (1) the four Safeguards and Access Building controlled areas, (2) the Fuel Pool Building, (3) the Radwaste Building and (4) the Nuclear Auxiliary Building.
- Main Condenser air evacuation exhaust.

The annual average airborne releases of radionuclides from the plant were determined using the PWR GALE code (NRC, 1985). The GALE code models releases using realistic source terms derived from the experiences of many operating reactors, field and laboratory tests, and plant-specific design considerations incorporated to reduce the quantity of radioactive materials that may be released to the environment during normal operation, including anticipated operational occurrences. The code input values used in the analysis are provided in Section 3.5.1. The expected annual releases from the plant are presented in Table 3.5-7 and Table 3.5-11.

© 2007 UniStar Nuclear Services, LLC. All rights reserved.
COPYRIGHT PROTECTED

3.5.3.3 Gaseous Waste System Cost-Benefit Analysis

As with the liquid waste processing systems, the ALARA design objective dose values for effluents released from a light water reactor as stipulated in 10 CFR 50, Appendix I (CFR, 2007a), the regulation also requires that plant designs include all items of reasonably demonstrated cleanup technology that when added to the gaseous waste processing system sequentially and in order of diminishing cost-benefit return, can, at a favorable cost-benefit ratio, effect reductions in dose to the population reasonably expected to be within 50 mi (80 km) of the reactor. Values of $2,000 per person-rem and $2,000 per person-thyroid-rem are used as a favorable cost benefit threshold based on NRC NUREG-1530 (NRC, 1995). The source term for each equipment configuration option was generated using the same GALE code as described in Section 3.5.1 along with the same plant specific parameters modified only to accommodate the changes in waste stream decontamination factor afforded by the design options simulated.

For the U.S. EPR, the dose reduction effects for the sequential addition of the next logical gaseous waste processing component (i.e., addition of an additional charcoal delay bed to the waste gas holdup subsystem)) results in a reduction in the 50 mi (80 km) population total body exposure of 0.03 person-rem (0.0003 person-sievert). Section 5.4 describes the population dose calculation for both the base case augmented charcoal delay bed holdup system for processing gaseous waste. Table 3.5-12 illustrates the relative population dose associated with both base equipment configuration and that associated with the augmented holdup system. Table 3.5-13 compares the estimated total body and thyroid dose reduction or savings achieved for the addition of the extra delay bed along with a conservative estimated cost for the purchase. Operating and maintenance cost associated with this passive subsystem is negligible. The cost basis for the equipment option is taken from Regulatory Guide 1.110 (NRC, 1976a) and reported in 1975 non-escalated dollars which provides a conservatively low estimate of the equipment cost to todays dollars. The site area population within 50 mi (80 km) is based a projected population in 2080, over 60 years from the estimated start of plant operations. Using the population at the end of plant life is conservative in that it maximizes the collective dose from plant effluents.

For both the total body and thyroid dose reduction, Table 3.5-13 illustrates that the favorable benefit in reduced dose associated with the additional charcoal delay bed had a dollar equivalent benefit value of $3,600. However, the estimated cost to purchase this equipment was approximately $67,000, thereby resulting in a total body effective benefit to cost ratio of less than 1.0 (not justified on an ALARA basis of dose savings to the public).

The total gas release from the plant is made up of several sources, of which the charcoal delay bed subsystem provides treatment for the process gas from primary side reactor system components only. As a consequent, assuming that the process gas stream release has a zero value does not result in a zero dose to the population. Ventilation system exhaust from the reactor building and other controlled area buildings, along with any secondary side process gas releases if primary to secondary leaks occur also contribute to the total release. Because these sources are distributed throughout the plant, no single system can be added that effectively reduces all sources of gas releases. However, beyond the waste gas processing that is accomplished by the charcoal delay beds, the existing controlled area ventilation systems already provide for HEPA filtration, and as needed charcoal filtration, to the major sources of gas released to the environment. As a result, no other treatment options not in use are available that could treat a significant fraction of the total release at a favorable cost to that shown for the charcoal delay bed.

© 2007 UniStar Nuclear Services, LLC. All rights reserved.
COPYRIGHT PROTECTED

3.5.4 SOLID RADIOACTIVE WASTE SYSTEM

The Solid Waste Management System serves to collect, treat and store the solid radioactive wastes produced throughout the plant. There are several types of wet solid waste produced in the plant. These include spent resins, filter and centrifuge sludge's, sludge from the storage tank bottoms, and evaporator concentrates. There are also dry wastes such as paper, cloth, wood, plastic, rubber, glass and metal components that are contaminated.

The solid system consists of three parts; the radioactive concentrates processing system, the solid waste processing system and the solid waste storage system. Figure 3.5-8 provides a flow diagram of the inputs and processes associated with the solid waste system.

The radioactive concentrates processing system serves to process radioactive concentrates into a monolithic salt block by drying liquid radioactive waste from different systems. The liquid waste treated includes the concentrates left after the liquid waste has been treated in the evaporator of the Liquid Waste Processing System. It also treats the radioactive sludge from the liquid waste storage tanks of the Liquid Waste Storage System. The spent ion exchange resins from the Coolant Purification System or liquid waste processing demineralizer package are also sent to the concentrates processing system, after they have been stored for a period of time, to be processed with the other radioactive concentrates.

The Dry Solid Waste Processing System serves to collect and process the solid or DAW produced throughout the plant. This waste can include materials such as plastics, paper, clothing, glass, rubber, wood and metal. The waste is separated and processed separately depending upon size, activity and physical/chemical conditions. In-plant capability to separate, shred and compact DAW waste materials into disposable containers is provided. Alternately, DAW may be shipped in the "as collected" form to an offsite licensed processor for volume reduction treatment and final packaging and shipment to a disposal facility.

The Solid Waste Storage System serves to store the solid waste mentioned above both before and after processing. The untreated solid waste is stored near its producing area until it is ready to be processed. Wet solid waste shall be stored separately from DAW to avoid cross contamination. Once treated, the solid waste, along with the treated concentrates, is stored in one of two areas. One area is a tubular shaft storage area for the high activity drums and the other is a temporary storage area for low to medium activity drums. Once the activity has reduced to a low enough level, the drums are transported to an offsite repository for final disposal.

3.5.4.1 Radioactive Concentrates Processing System

The Radioactive Concentrates Processing System is used to produce a monolithic salt block inside a disposal drum by drying high solids content liquids from different systems.

Evaporator concentrates from the concentrate tanks and contaminated sludge from the liquid waste storage tanks of the liquid waste storage system are transferred to the concentrate buffer tank. These wastes are mixed, sampled and analyzed for proper pretreatment before leaving the concentrate buffer tank.

Spent resins are stored in the resin waste tanks of the coolant purification system for an extended length of time to allow short lived activity to decay away. When processed, these resins are transferred into the resin proportioning tank. Depending upon activity levels in the resin, a portion of the resins is transferred into the concentrate buffer tank with liquid waste where it is mixed to control the overall waste radioactivity concentration. Spent resin from the

© 2007 UniStar Nuclear Services, LLC. All rights reserved.
COPYRIGHT PROTECTED

Liquid Waste Storage and Processing System demineralizer/ultra filtration skid may be sent directly to high integrity containers (HICs) for in-container dewatering or transferred to the concentrate buffer tank. This demineralizer system produces spent resins as well as a small amount of solid waste from the back flush of the ultra filtration system.

From the concentrate buffer tank, the liquid waste can be transferred into a storage drum in one of three drum drying stations where the water content is evaporated off. Alternately, resin slurries can be transferred to HICs to be dewatered and sent to disposal. In the drum drying station, a seal is established on the drum and a vacuum established. Then the heaters are energized to evaporate the water from the drum. The vacuum in the drum allows a lower required heating temperature to boil off the water. The water vapor is condensed and collected and volume counted before it is drained to the condensate collection tank. The air and non-condensable gases are routed to the Radioactive Waste Building Ventilation System for processing. After most of the liquid has been evaporated out of the drum, it is refilled with more waste from the concentrate buffer tank and the drying process is re-initiated. This filling and evaporation process is repeated until the drum is filled with a solid precipitated dry activity waste product. The solid drum drying process reduces the moisture content of the solid block to the level required for disposal at an offsite repository.

Once the residual moisture has been reached, the shell and bottom heaters are turned off and disengaged from the drum. After a set time, the vacuum unit is shut down and the drum drying station is directly vented to the Radioactive Waste Building Ventilation System. While the drum is still connected to the Radioactive Waste Building Ventilation System, the product is allowed to cool to a less than 212ºF (100ºC).

The whole drying process is performed automatically which means that the system can operate 24 hours a day and unattended. Only during the drum exchange process does an operator have to be at the control panel to perform the different drum exchange steps. This process is done remotely.

Once the product cools down, the drum is lowered and transferred to the pickup position outside the filling station. In this position the drum is picked up by the drum handling device, lowered to the pickup position conveyor (part of the drum transfer device (DTD)). The DTD transfers the filled uncapped drum to the sampling position for dried waste for taking samples from the content of the drum as far as defined in a semi-automatic mode (the sample is taken automatically while insertion and removal of the shielded drill is performed manually). In the next step the drum is routed to the drum capping device for capping the filled drum.

The drum capping device operates automatically. After the drum reaches the capping position, a start button is pressed and a lid is automatically placed on the drum. The drum is automatically capped and once complete, a release signal allows the further transport of the drum to the drum input/output position. From the input/output position, the drum is moved by the drum store crane to the drum measuring device.

In the drum measuring device, the weight, the dose rate and the main radionuclides of the drum content are measured. A gamma spectroscopy measurement with a Ge-detector is used to determine radionuclides and their activity. The drum is arranged on a turntable which is slowly rotated during the measurement process. The drum measuring device operates automatically. Once the measuring process is complete, the drum is picked up by the drum store crane and moved to the drum store for storage.

© 2007 UniStar Nuclear Services, LLC. All rights reserved.
COPYRIGHT PROTECTED

3.5.4.2 Solid Waste Processing System

DAW is collected in suitable containers such as plastic bags, drums or bins that are placed in various locations throughout the controlled areas of the plant at such points as step-off pads at exits from contaminated areas. Once full, these collection bags or bins are sent to the solid waste processing area for sorting, compaction if suitable, and final packaging for temporary storage in-plant or shipment to a licensed disposal facility offsite or licensed waste processor for additional processing before final disposal.

The in-plant treatment facilities include a sorting box for sorting waste into compressible and non-compressible fractions, a drying box for drying of wet materials that might have greater than incidental moisture before further treatment, a shredder for treating large bulky combustible and compressible waste before being compacted, and a compactor for in-drum compaction of compressible waste. Filter cartridges are loaded in high integrity containers with other wastes for disposal.

3.5.4.3 Solid Waste Storage System

The different properties, sizes, materials and activity of the solid radioactive waste are considered while collecting the waste in different containers so as to simplify both handling and storage of the waste in the plant and its transport.

Various storage areas are provided in the Radioactive Waste Building for the different types of solid waste and contaminated components.

The system is able to handle and store the waste generated in the different controlled areas of the plant independent from the plant operating conditions. Storage space is provided for collected untreated waste waiting for treatment. Additional space is provided for treated and packaged low activity waste, such as DAW, as well as higher activity waste in a tubular shaft storage arrangement that provides shielding for operating staff. The tubular shaft store is part of the permanent building structure formed in the shape of tubes. The higher activity waste includes items such as the radioactive concentrates treated in the radioactive concentrates processing system and the spent filter cartridges. The drum store is located in the Radioactive Waste Processing Building in an area used for temporary storage of low level radioactive waste treated by the solid waste processing system. The drums can be stacked a maximum of 5 drums high to optimize the available storage space. The drums are stored for a sufficient time to allow the short lived radionuclides to decay thereby reducing the radiation levels to keep radiation exposures ALARA..

The drums containing the spent filter cartridges are placed in a shielded cask and brought to the drum transfer station. Once at the drum transfer station, the vehicle entrance crane lifts the lid off the cask and the drum store crane takes the drum to the tubular shaft store for storage. The lid is then place back on the cask and the cask is returned to the Nuclear Auxiliary Building to the filter changing area.

The drums containing the medium activity waste such as spent filter cartridges, spent resins and the concentrates wastes from the radioactive concentrates processing system are transported to a final repository after being temporarily stored in the tubular shaft storage area. This is done by using the drum storage crane to remove the drums from the tubular shaft and place them in the drum transfer position. They are placed in a shielding cask and lifted to the vehicle entrance area by the vehicle entrance crane. Once in the vehicle entrance area, each drum is removed from the cask and placed into an approved shipping container to be moved to the offsite facility.

© 2007 UniStar Nuclear Services, LLC. All rights reserved.
COPYRIGHT PROTECTED

3.5.4.4 Expected Volumes

The volume of solid radioactive waste estimated to be generated by the U.S. EPR is approximately 7,933 ft^3 (224.6 m^3) per year (including compressible waste). Table 3.5-10 delineates the expected annual volume by waste type. For liquid waste streams, the maximum volume reduction is achieved by converting liquid waste concentrates to dried salt deposits in the waste drum drying subsystem. Final drum drying is expected to achieve a volume reduction (VR) factor of about 5 over the concentrate stream. After dewatering, spent demineralizer resins are assumed to have the same volume as the initial resin volume used (i.e., no VR). Table 3.5-10 presents the final volume of processed concentrates ready for storage or shipment to a disposal facility. For DAW, Table 3.5-10 indicates the "as collected" volumes and assumes that no onsite volume reduction to these waste are applied. These materials are expected to be sent to an off site licensed waste processor for sorting and treatment for volume reduction before shipment to a disposal facility. If onsite compaction of compressible DAW is performed, a VR factor of 5 or more is expected assuming:

1. Each non-regenerable ion-exchanger is changed annually; and

2. Approximately 15 spent filter cartridges from all process systems combined are generated annually with a package volume of approximately 120 ft^3 (3.40 m^3) (one filter element per disposal drum).

Curie content associated with this waste volume is also delineated in Table 3.5-10. The radioactive concentrations vary considerably depending upon plant operating conditions. However, radiation monitoring (and related interlocks) within the solidification system ensure that all shipments will comply with federal and state regulations (i.e., radiation levels and gross weight of shipping vehicle).

3.5.4.5 Solid Release to the Environment

Solid wastes will be shipped from the site for burial at a NRC licensed burial site. The containers used for solid waste shipments will meet the requirements of 49 CFR Parts 170 through 189 (Department of Transportation Radioactivity Material Regulations) (CFR, 2007e), and 10 CFR Part 71 (Packaging of Radioactive Materials for Transport) (CFR, 2007f).
Table 3.5-10 summarizes the annual total solid radioactive waste generated at CCNPP Unit 3.

3.5.4.6 Independent Spent Fuel Storage Installation

As a result for the need for additional storage capacity for spent fuel being generated by the operations of Calvert Cliffs Nuclear Power Plants (CCNPP) Units 1 and 2, an Independent Spent Fuel Storage Installation (ISFSI) was constructed on the CCNPP site approximately 2,000 ft (610 m) south-southwest of CCNPP Units 1 and 2. The first dry fuel storage canister was loaded into the ISFSI in November of 1993, with additional canisters loaded in subsequent years. The ISFSI is situated approximately 1,600 ft (488 m) west from the CCNPP Unit 3 containment.

3.5.5 PROCESS AND EFFLUENT MONITORING

For routine operations, the process and effluent radiological monitoring and sampling systems monitor, record and (for certain subsystems) control the release of radioactive materials that may be generated during normal operation, including anticipated operational occurrences.

The process and effluent radiological monitoring systems consist of radiation detectors connected to local microprocessors. Each microprocessor processes the detector signal in digital form, computes average radioactivity levels, stores data, performs alarm or control

© 2007 UniStar Nuclear Services, LLC. All rights reserved.
COPYRIGHT PROTECTED

functions, and transmits the digital signal to one of the control room information and control systems. Monitoring systems alarm when setpoint limits are exceeded and if the system becomes inoperable. Alarms are indicated both locally and in the control room.

For gaseous waste, all compartment ventilation exhaust air from controlled areas (i.e., Reactor Building, Fuel Building, Safeguard Buildings, Waste Building and Nuclear Auxiliary Building) and the gaseous waste system exhaust air is discharged to and monitored in the plant vent stack. Effluent sampling systems also monitor the Reactor Building, Fuel Building, the Nuclear Auxiliary Building and the mechanical area of the Safeguard Buildings, as well as the vent stack. Samples are also taken and monitored from the exhaust air of the Access Building and the Waste Building. These two buildings are not part of the controlled area and do not vent to the vent stack. Sampling of these two buildings provides assurance that an inadvertent release of radioactivity to the environment will be monitored. Gaseous effluent monitoring systems utilized in the U.S. EPR are discussed in the following sections.

The liquid radioactive waste effluent monitoring system measures the concentration of radioactive materials in liquids released to the environment to ensure that radionuclide concentration limits specified in 10 CFR 20 are complied with. Process line monitors provide operating personnel indication of system performance and the existence of leaks from contaminated systems to clean systems or subsystems of lower expected radioactivity.

The process and effluent monitors are discussed below by the plant system that is being monitored. Table 3.5-14 has been arranged by the radioisotopes monitored to make it more convenient to compare monitors that perform a similar function. The monitors in Table 3.5-14 are grouped by categories for noble gas effluent, gaseous iodine and aerosol (halogen and particulate) effluent, process monitoring (area radiation levels, personnel and equipment contamination, system leakage from the primary side to nuclear island buildings or secondary systems), liquid effluent, and airborne radiation levels.

3.5.5.1 Vent Stack

Vent stack gaseous effluent monitoring is accomplished by the use of continuously operating measurement devices for noble gas, aerosol, and iodine. Samples are also collected that may be utilized for laboratory determination of tritium. Two independent systems provide system redundancy and permits maintenance on one train while continually monitoring effluents with the other train. Each sampling system consists of a sampling nozzle array designed to provide a representative sample, two 100% capacity rotary sampling pumps, and specially designed interconnecting tubing running between a sampling nozzle array, sampling pumps, and radiation monitoring instrumentation. Gaseous samples exiting the monitoring instrumentation are returned to the vent stack. The vent stack effluent monitoring system has the following general characteristics:

- Noble gas activity is monitored with beta-sensitive detectors. The gross output of the monitor is periodically normalized to the radionuclide composition by performing a gamma-spectroscopic analysis on a representative grab sample.

- Aerosol activity is monitored with the use of a particulate filter through which sample flow is continuously maintained. Aerosol particles are removed by the filter, which is continuously monitored by a gamma-sensitive detector.

- Iodine activity is monitored with the use of a dual filter for organic and inorganic iodine. Each filter is continuously monitored by a gamma-sensitive detector.

© 2007 UniStar Nuclear Services, LLC. All rights reserved.
COPYRIGHT PROTECTED

For both particulate and iodine monitoring, the gross outputs of the monitors are normalized by laboratory analysis of a duplicate set of filters installed in parallel with the primary ones. The vent stack gaseous effluent monitoring system does not perform any automatic actions. The system monitors, records, and alarms in the control room in the event that monitored radiation levels increase beyond specified setpoints. Measurement ranges of noble gas, aerosol, and iodine monitors are shown in Table 3.5-14.

3.5.5.2 Gaseous Waste Carbon Delay Beds

The gaseous waste delay bed process stream is continuously monitored prior to waste flow being directed to the plant vent stack. One gamma-sensitive radiation detector is located up-stream of the delay beds and one beta-sensitive radiation detector downstream of the beds outlet. The upstream detector provides plant personnel with an indication of the amount of radioactivity entering the system. The downstream detector is a beta-sensitive instrument, as Krypton-85 generally forms the main constituent (about 95%) of the normal radioactive noble gas waste stream, and provides personnel a means to compare the reduction in radioactivity afforded by the delay bed system. The gaseous waste monitoring system provides control room and local indication and an alarm in the main control room terminates release to the plant vent stack by closing the discharge valve. Measuring ranges of the gaseous waste disposal radiation monitoring system are shown in Table 3.5-14.

3.5.5.3 Condenser Air Removal Monitor

Non-condensable gases (air and noble gases) in the secondary system are continuously removed during operation by the condenser air removal system. These gases are exhausted to the vent stack. The function of the condenser air removal radiation monitor is to provide local and control room alarm in the event that noble gas radioactivity is detected in the secondary system. This would be an indication of a breach of fuel cladding, primary coolant boundary, or containment leak. Measuring ranges of the condenser air removal radiation monitoring system are shown in Table 3.5-14. No automatic actions are initiated by this system.

3.5.5.4 Main Steam Radiation Monitoring System

Radioactivity releases from the reactor coolant system to the main steam system (nitrogen-16 (N-16), noble gases) can occur as a result of steam generator tube leakage. Radioactivity in the main steam system is monitored over a wide power range by four redundant measuring arrangements per steam line (16 total for the system). The gamma sensitive detectors are mounted adjacent to the monitored main steam lines within the main steam and feedwater valve compartments. At low power levels, radioactivity will be detected in the main steam due to noble gas. At high power levels, the detectors detect the strong gamma from N-16. Shielding of detectors ensures that detectors on other main steam lines do not erroneously respond. The redundant measurement signals are processed, and provide alarm in the control room upon detection of radioactivity. The main steam radiation monitoring system is utilized in conjunction with the condenser air removal and steam generator blowdown radiation monitoring systems to identify a defective steam generator. The main steam radiation monitoring system does not initiate any automatic actions. Isolation of a defective steam generator is performed by manual operator actions. Measuring ranges of the main steam radiation monitoring system are shown in Table 3.5-14.

3.5.5.5 Reactor Coolant Radiation Monitor and Sampling System

The noble gas radioactivity concentration of the primary coolant is monitored by monitoring the noble gas activity concentration in the gaseous volume flow prior to discharge to the Nuclear Sampling System degasifier. Monitoring is accomplished with a beta-sensitive

© 2007 UniStar Nuclear Services, LLC. All rights reserved.
COPYRIGHT PROTECTED

measuring arrangement located immediately adjacent to the sampling line. This measuring point allows early detection of fuel element failures. The measurement range for this radiation monitoring system is shown in Table 3.5-14.

3.5.5.6 Containment Atmosphere Radiation Monitor

The containment atmosphere radiation monitor measures the radioactive gaseous concentrations in the containment atmosphere. The containment atmosphere radiation monitor is a part of a reactor coolant pressure boundary leak detection system. The presence of gaseous radioactivity in the containment atmosphere is an indication of reactor coolant pressure boundary leakage. The measurement range for this radiation monitoring system is shown in Table 3.5-14.

3.5.5.7 Containment Ventilation System Radiation Monitor

The containment ventilation system air filtration exhaust radiation monitor measures the concentration of radioactive materials in the containment purge exhaust air. The monitor provides an alarm in the main control room when the concentration of radioactive gases in the exhaust exceeds a predetermined setpoint.

The containment ventilation system air filtration exhaust radiation monitor is to be an inline monitor that uses a beta-sensitive scintillation detector. The measurement range for this radiation monitoring system is shown in Table 3.5-14.

3.5.5.8 Liquid Waste Tank Monitors

The liquid radioactive waste monitoring system measures the concentration of radioactive materials in liquids released to the environment to ensure that radionuclide concentration limits specified in 10 CFR 20 and dose requirements specified in 10 CFR 50 are complied with. Liquid radioactive waste is discharged in batches. Prior to release of a liquid radioactive waste tank, a representative sample is taken and radiochemically analyzed. Results of this analysis are utilized in conjunction with dilution factor data to determine a release setpoint for the liquid waste monitoring system. Two continuously operating radiation sensors monitor the release line from the tanks. Release is automatically terminated if a set limit is exceeded or if the monitoring system is inoperable. Measurement ranges of the liquid radioactive waste monitoring system are shown in Table 3.5-14.

3.5.5.9 Primary Component Cooling Liquid Monitors

The component cooling water system consists of a closed loop used to transfer heat from nuclear components to service water by the use of coolers (heat exchangers). The closed nature of this system constitutes a barrier against the release of radioactivity to the service water and thus to the environment in the event of leaks in the associated coolers.

The Component Cooling Water Radiation Monitoring System consists of two subsystems. The general component cooling water monitoring system utilizes gamma-sensitive radiation detectors in the four separate safety-related trains of the Component Cooling Water System to monitor the fluid for any escape of radioactivity from the various radioactivity containing systems that make up the nuclear components served by the component cooling circuits. This subsystem provides local and control alarm in the event that component cooling water gamma radiation levels exceed the monitor setpoint. No automatic actions are initiated by this subsystem.

© 2007 UniStar Nuclear Services, LLC. All rights reserved.
COPYRIGHT PROTECTED

The second subsystem consists of two gamma-sensitive radiation detectors upstream and two gamma-sensitive radiation detectors downstream on the component cooling water lines feeding/exiting the two high-pressure (HP) coolers of the Volume Control System. In the event of a leak in a HP cooler with high-activity primary coolant leaking into the component cooling water system, the radiation detector downstream of the defective cooler indicates the entry of radioactivity from this HP cooler into the component cooling loop that is running at the time. If the radioactivity exceeds a pre-determined limit, the defective HP cooler is automatically isolated, with associated control room alarm, on the primary side. This automatic action is suppressed if the limit value of the radiation detector at the inlet of the cooler has already triggered a high activity signal and during in-service inspection of the measuring points.

The component cooling water radiation monitoring system utilizes lead-shielded gamma-sensitive detectors installed adjacent to the piping. Measuring ranges of the Component Cooling Water Radiation Monitoring System are shown in Table 3.5-14.

3.5.5.10 Steam Generator Blowdown Sample Monitors

The evaporation process within the steam generator results in the concentration of contaminants in the liquid phase. These contaminants include any non-gaseous radioactive substances that have entered the secondary system from the reactor coolant system as a result of tube leakage in a steam generator.

Sampling lines extract blowdown water from the individual blowdown lines for chemical analysis. These lines are located ahead of the primary isolation valve within the reactor containment. Flow is continuously extracted from each of these lines and fed to gamma activity measurement equipment. This allows each steam generator to be monitored separately and continuously for radioactivity carryover to the secondary side. These monitors enable the identification or verification of a steam generator tube leak. Measuring ranges of the Steam Generator Radiation Monitoring System are shown in Table 3.5-14.

3.5.5.11 Turbine Building Drains Effluent Monitor

Turbine Building waste liquid is released from the plant via a monitored pathway to the cooling tower retention basin before release to the Chesapeake Bay. The effluent monitor provides alarm and trip function on the discharge flow if unexpected levels of radioactivity are detected in the release. Measuring ranges of the turbine building drains effluent monitor is shown in Table 3.5-14.

3.5.6 REFERENCES

ANS, 1999. American National Standard – Radioactive Source Term for Normal Operations of Light Water Reactors, ANSI/ANS 18.1-1999, American Nuclear Society, 1999.

CFR, 2007a. Title 10, Code of Federal Regulations, Part 50.34a, Design Objectives for Equipment to Control Releases of Radioactive Material in Effluents – Nuclear Power Reactors, and Appendix I, Numerical Guides for Design Objectives and Limiting Conditions for Operation to Meet the Criterion "As Low as is Reasonably Achievable" for Radioactive Material in Light-Water-Cooled Nuclear Power Reactor Effluents, 2007.

CFR, 2007b. Title 40, Code of Federal Regulations, Part 190, Radiation Protection Programs, 2007.

CFR, 2007c. Title 10, Code of Federal Regulations, Part 20.1301, Dose Limits for Individual Members of the Public, Code of Federal Regulations, 2007.

© 2007 UniStar Nuclear Services, LLC. All rights reserved.
COPYRIGHT PROTECTED

CFR, 2007d. Title 10, Code of Federal Regulations, Part 20, Appendix B, Table 2, Radionuclides, Annual Limits on Intake (ALIs) and Derived Air Concentrations (DACs) of Radionuclides for Occupational Exposure; Effluent Concentrations; Concentrations for Release to Sewage, 2007.

NRC, 1985. Calculation of Releases of Radioactive Materials in Gaseous and Liquid Effluents from Pressurized Water Reactors, PWR-GALE Code, NUREG-0017, Revision 1, Nuclear Regulatory Commission, April 1985.

NRC, 1995. Reassessment of NRC's Dollar Per Person-Rem Conversion Factor Policy, NUREG-1530, Nuclear Regulatory Commission, 1995.

NRC, 1976a. Calculation of Releases of Radioactive Materials in Gaseous and Liquid Effluents from Light-water Reactors, Regulatory Guide 1.112, Nuclear Regulatory Commission, 1976.

NRC, 1976b. Cost-Benefit Analysis for Radwaste Systems for Light Water-Cooled Nuclear Power Reactors, Regulatory Guide 1.110 (For Comment), Nuclear Regulatory Commission, March 1976.

© 2007 UniStar Nuclear Services, LLC. All rights reserved.
COPYRIGHT PROTECTED

Table 3.5-1—Parameters Used in the Calculation of Fission Product Activity in Reactor (Design Basis)

	Parameter	Value
1.	Total core thermal power, including measurement uncertainty [MWt]	4,612
2.	Clad defects, as a percent of rated core thermal power being generated by rods with clad defects [%]	1.0
3.	Volume of reactor coolant system [ft^3] (m^3)	15,009 (425)
4.	Reactor coolant full power average temperature [°F](C)	594. (312.2)
5.	Purification flow rate (normal) [lbm/hr] (kg/hr)	79,400 (36,000)
6.	Effective cation demineralizer flow [gpm]	NA
7.	Fission product escape rate coefficients:	
	a. Noble gas isotopes [sec^{-1}]	6.5E-08
	b. Br, Rb, I and Cs isotopes [sec^{-1}]	1.3E-08
	c. Te isotopes [sec^{-1}]	1.0E-09
	d. Mo isotopes [sec^{-1}]	2.0E-09
	e. Sr and Ba isotopes [sec^{-1}]	1.0E-11
	f. Y, Zr, Nb, Ru, Rh, La, Ce, Pr, Nd and Pm isotopes [sec^{-1}]	1.6E-12
8.	Purification mixed bed demineralizer decontamination factors (fractions removed):	
	a. Noble gases and N-16, H-3	0.0
	b. Cs, Rb	0.5
	c. Anion / others	0.99 / 0.98
9.	Cation bed demineralizer decontamination factor	NA
10.	Degasifier noble gas stripping fractions	1.0

© 2007 UniStar Nuclear Services, LLC. All rights reserved.
COPYRIGHT PROTECTED

Table 3.5-2—Reactor Coolant Radionuclide Concentrations

(Page 1 of 3)

	Design Basis		Realistic Source Term (GALE)	
Radionuclide	**µCi/gm**	**Bq/gm**	**µCi/gm**	**Bq/gm**
Noble Gases[a]				
Kr-83m	1.3E-01	4.7E+03		
Kr-85m*	5.7E-01	2.0E+04	1.0E-02	6.8E+02
Kr-85*	5.3E+00	2.0E+05	5.8E-01	2.2E+04
Kr-87*	3.3E-01	1.2E+04	2.0E-023	7.3E+02
Kr-88*	1.0E+00	3.8E+04	2.0E-023	47.7E+02
Kr-89	2.4E-02	9.0E+02		
Xe-131m*	1.1E+00	4.0E+04	8.8E-01	43
Xe-133m*	1.4E+00	5.0E+04	8.2E-02	3.470E+03
Xe-133*	9.5E+01	3.5E+06	3.4E-02	1.3E+03
Xe-135m*	2.0E-01	7.42E+03	1.45E-01	.6E+03
Xe-135*	3.4E+00	1.3E+05	7.7E-02	42
Xe-137	4.6E-02	1.7E+03	3.9E-02	1.5E+03
Xe-138*	1.6E-01	6.1E+03	7.0E-02	2.6E+03
Halogens[b]				
Br-83	3.2E-02	1.2E+03		
Br-84	1.7E-02	6.2E+02	1.8E-02	6.5E+02
Br-85	2.0E-03	7.4E+01		
I-129	4.6E-08	1.7E-03		
I-130	5.0E-02	1.8E+03		
I-131*	7.4E-01	2.7E+04	1.3E-03	4.8E+01
I-132*	3.7E-01	1.4E+04	6.0E-02	2.2E+03
I-133*	1.3E+00	4.8E+04	1.9E-02	7.2E+02
I-134*	2.4E-01	8.9E+03	1.1E-01	4.0E+03
I-135*	7.9E-01	2.9E+04	4.8E-02	1.8E+03
Rubidium, Cesium[c]				
Rb-86m	1.2E-06	4.4E-02		
Rb-86	7.7E-03	2.9E+02		
Rb-88	4.1E+00	1.5E+05	2.2E-01	8.0E+03
Rb-89	1.9E-01	7.0E+03		
Cs-134	6.8E-01	2.5E+04	2.6E-05	9.5E-01
Cs-136	2.1E-01	7.8E+03	6.2E-04	2.3E+01
Cs-137	4.3E-01	1.6E+04	3.7E-05	1.4E+00
Cs-138	8.8E-01	3.3E+04		
Miscellaneous Nuclides[c]				
Sr-89	2.5E-03	9.3E+01	8.9E-05	3.3E+00
Sr-90	1.3E-04	4.8E+00	7.6E-06	2.8E-01
Sr-91	4.1E-03	1.5E+02	8.0E-04	2.1E+01
Sr-92	6.9E-04	2.6E+01		
Y-90	3.1E-05	1.1E+00		
Y-91M	2.1E-03	7.7E+01	5.0E-04	1.9E+01
Y-91	3.2E-04	1.2E+01	3.3E-06	1.2E+01
Y-92	5.6E-04	2.1E+01		
Y-93	2.6E-04	9.6E+00	3.5E-03	1.3E+02
Zr-95	3.7E-04	1.4E+01	2.5E-04	E+00
Zr-97	2.7E-04	9.9E+00		
Nb-95	3.7E-04	1.4E+01	1.8E-04	6.6E+00

© 2007 UniStar Nuclear Services, LLC. All rights reserved.
COPYRIGHT PROTECTED

Table 3.5-2—Reactor Coolant Radionuclide Concentrations

(Page 2 of 3)

	Design Basis		Realistic Source Term (GALE)	
Radionuclide	**µCi/gm**	**Bq/gm**	**µCi/gm**	**Bq/gm**
Mo-99	4.3E-01	1.6E+04	4.3E-03	1.6E+02
Tc-99M	1.9E-01	E+03	4.2E-03	1.5E+02
Ru-103	3.1E-04	1.1E+01	4.8E-03	1.8E+02
Ru-105	3.8E-04	1.4E+01		
Ru-106	1.1E-04	4.0E+00	5.7E-02	2.1E+03
Rh-103M	2.7E-04	1.0E+01	0.00E+00	0.00E+00
Rh-105	1.8E-04	6.5E+00		
Rh-106	1.1E-04	4.0E+00	0.00E+00	0.00E+00
Ag-110M	7.9E-07	2.9E-02	8.2E-04	3.0E+01
Ag-110	4.4E-08	1.6E-03	0.00E+00	0.00E+00
Sb-125	3.2E-06	1.2E-01		
Sb-127	2.0E-05	7.4E-01		
Sb-129	2.7E-05	1.0E+00		
Te-127M	1.8E-03	6.7E+01		
Te-127	8.7E-03	3.2E+02		
Te-129M	5.8E-03	2.1E+02	1.2E-04	4.5E+00
Te-129	9.6E-03	3.6E+02	26E-02	9.445E+02
Te-131M	1.5E-02	5.5E+02	1.1E-036	4.0E+01
Te-131	1.0E-02	3.8E+02	8.6E-03	3.2E+02
Te-132	1.6E-01	6.0E+03	1.1E-03	4.2E+01
Te-134	2.7E-02	9.9E+02		
Ba-137M	4.0E-01	1.5E+04	0.00E+00	0.00E+00
Ba-139	8.6E-02	3.2E+03		
Ba-140	2.5E-03	9.2E+01	8.4E-03	3.1E+02
La-140	6.4E-04	2.4E+01	1.8E-02	6.5E+02
La-141	2.1E-04	7.8E+00		
La-142	1.3E-04	4.6E+00		
Ce-141	3.5E-04	1.3E+01	9.6E-05	3.5E+00
Ce-143	3.0E-04	1.1E+01	2.0E-03	7.4E+01
Ce-144	2.8E-04	1.0E+01	2.5E-03	9.4E+01
Pr-143	3.5E-04	1.3E+01	0.00E+00	0.00E+00
Pr-144	2.8E-04	1.0E+01	0.00E+00	0.00E+00
Nd-147	1.4E-04	5.1E+00		
Np-239	3.5E-03	1.3E+02	1.5E-03	5.6E+01
Pu-238	8.0E-07	2.9E-02		
Pu-239	8.1E-08	3.0E-03		
Pu-240	1.1E-07	4.1E-03		
Pu-241	2.8E-05	1.0E+00		
Am-241	3.1E-08	1.2E-03		
Cm-242	7.5E-06	2.8E-01		
Cm-244	4.1E-07	1.5E-02		
Activation Products[d]				
Na-24	3.7E-02	1.4E+03	3.7E-02	1.4E+03
Cr-51	2.0E-03	7.4E+01	2.0E-03	7.3E+01
Mn-54	1.0E-03	3.7E+01	1.0E-03	3.7E+01
Fe-55	7.6E-04	2.8E+01	7.6E-04	2.8E+01
Fe-59	1.9E-04	7.0E+00	1.9E-04	7.1E+00

© 2007 UniStar Nuclear Services, LLC. All rights reserved.
COPYRIGHT PROTECTED

Table 3.5-2—Reactor Coolant Radionuclide Concentrations

(Page 3 of 3)

	Design Basis		Realistic Source Term (GALE)	
Radionuclide	**µCi/gm**	**Bq/gm**	**µCi/gm**	**Bq/gm**
Co-58	2.9E-03	1.1E+02	2.9E-03	1.1E+02
Co-60	3.4E-04	1.3E+01	3.4E-04	1.2E+01
Zn-65	3.2E-04	1.2E+01	3.2E-04	1.2E+01
W-187	1.8E-03	6.7E+01	1.8E-03	6.8E+01
Tritium				
H-3	4.0	1.5E+05	1.0E+00	3.7E+04
All Others				
All Others			6.25E-01	2.31E+04

Notes:
For Design Basis concentrations, the following conditions apply;
(a)The noble gas concentrations are at the U.S. EPR Standard Technical Specification limit of 210 µCi/gm DE-Xe-133
(b)The halogen concentrations are at the U.S. EPR proposed Standard Technical Specification limit of 1 µCi/gm DE-I-131
(c)The concentrations for this group are based on 1.0% failed fuel fraction.
(d)The concentration of activation products based on ANSI/ANS-18.1-1999.
*Radionuclide concentration controlled by proposed Technical Specifications

© 2007 UniStar Nuclear Services, LLC. All rights reserved.
COPYRIGHT PROTECTED

Table 3.5-3—Secondary Coolant Radionuclide Concentrations

(Page 1 of 3)

	Design Basis Liquid		Design Basis Steam		Realistic Source Term-Liquid[e]		Realistic Source Term-Steam[e]	
Radionuclide	**µCi/gm**	**Bq/gm**	**µCi/gm**	**Bq/gm**	**µCi/gm**	**Bq/gm**	**µCi/gm**	**Bq/gm**
Noble Gases[a]								
Kr-83m	N/A	N/A	2.1E-05	7.9E-01				
Kr-85m	N/A	N/A	5.8E-06	2.1E-01	0.0E+00	0.0E+00	3.1E-08	1.1E-04
Kr-85	N/A	N/A	5.4E-05	2.0E+00	0.0E+00	0.0E+00	9.5E-08	3.5E-03
Kr-87	N/A	N/A	3.3E-06	1.2E-01	0.0E+00	0.0E+00	9.1E-09	3.4E-04
Kr-88	N/A	N/A	1.0E-05	3.8E-01	0.0E+00	0.0E+00	3.5E-09	1.3E-04
Kr-89	N/A	N/A	2.4E-07	9.0E-03				
Xe-131m	N/A	N/A	1.1E-05	4.0E-01	0.0E+00	0.0E+00	1.4E-07	5.3E-03
Xe-133m	N/A	N/A	1.5E-05	5.6E-01	0.0E+00	0.0E+00	1.4E-08	5.1E-04
Xe-133	N/A	N/A	9.7E-04	3.6E+01	0.0E+00	0.0E+00	5.6E-09	2.1E-04
Xe-135m	N/A	N/A	8.2E-04	3.0E+01	0.0E+00	0.0E+00	2.5E-08	9.3E-04
Xe-135	N/A	N/A	1.6E-04	6.0E+00	0.0E+00	0.0E+00	1.3E-08	4.7E-04
Xe-137	N/A	N/A	4.6E-07	1.7E-02	0.0E+00	0.0E+00	6.5E-09	2.4E-04
Xe-138	N/A	N/A	1.6E-06	6.1E-02	0.0E+00	0.0E+00	1.2E-08	4.4E-04
Halogens[b]								
Br-83	1.6E-03	6.0E+01	1.6E-05	6.0E-01				
Br-84	3.1E-04	1.1E+01	3.1E-06	1.1E-01	5.8E-08	2.2E-03	5.8E-10	2.2E-05
Br-85	3.9E-06	1.5E-01	3.9E-08	1.5E-03				
I-129	4.8E-09	1.8E-04	4.8E-11	1.8E-06				
I-130	4.3E-03	1.6E+02	4.3E-05	1.6E+00				
I-131	7.7E-02	2.8E+03	7.7E-04	2.8E+01	4.1E-08	1.5E-03	4.1E-10	1.5E-05
I-132	2.3E-02	8.5E+02	2.3E-04	8.4E+00	6.5E-07	2.4E-02	6.5E-09	2.4E-04
I-133	1.2E-01	4.3E+03	1.2E-03	4.3E+01	5.2E-07	1.9E-02	5.2E-09	1.9E-04
I-134	6.7E-03	2.5E+02	6.7E-05	2.5E+00	5.5E-07	2.0E-02	5.5E-09	2.0E-04
I-135	6.0E-02	2.2E+03	6.0E-04	2.2E+01	9.2E-07	3.4E-02	9.2E-09	3.4E-04
Rubidium, Cesium[c]								
Rb-86M	9.0E-12	3.3E-07	4.5E-14	1.7E-09				
Rb-86	1.5E-05	5.7E-01	7.7E-08	2.8E-03				
Rb-88	5.0E-04	1.9E+01	2.5E-06	9.3E-02	4.2E-07	1.6E-02	2.1E-09	7.7E-05
Rb-89	2.0E-05	7.4E-01	1.0E-07	3.7E-03				
Cs-134	1.4E-03	5.1E+01	6.8E-06	2.5E-01	9.3E-10	3.4E-05	4.9E-12	1.8E-07
Cs-136	4.2E-04	1.6E+01	2.1E-06	7.8E-02	2.2E-08	8.3E-04	1.1E-10	4.1E-06
Cs-137	8.7E-04	3.2E+01	4.3E-06	1.6E-01	1.4E-09	5.1E-05	6.6E-12	2.4E-07
Cs-138	1.9E-04	6.9E+00	9.4E-07	3.5E-02				
Miscellaneous Nuclides[c]								
Sr-89	2.9E-06	1.1E-01	1.4E-08	5.3E-04	2.9E-09	1.1E-04	1.5E-11	5.4E-07
Sr-90	1.4E-07	5.4E-03	7.2E-10	2.7E-05	2.5E-10	9.1E-06	1.2E-12	4.4E-08
Sr-91	3.6E-06	1.3E-01	1.8E-08	6.7E-04	1.8E-08	6.5E-04	8.8E-11	3.3E-06
Sr-92	4.0E-07	1.5E-02	2.0E-09	7.4E-05				
Y-90	3.8E-08	1.4E-03	1.9E-10	7.1E-06				
Y-91M	2.2E-06	8.0E-02	1.1E-08	4.0E-04	2.5E-09	9.1E-05	1.2E-11	4.6E-07
Y-91	3.7E-07	1.4E-02	1.8E-09	6.8E-05	1.1E-10	3.9E-06	5.5E-13	2.0E-08
Y-92	5.3E-07	2.0E-02	2.7E-09	9.9E-05				
Y-93	2.3E-07	8.6E-03	1.2E-09	4.3E-05	7.5E-08	2.8E-03	3.8E-10	1.4E-05
Zr-95	4.2E-07	1.5E-02	2.1E-09	7.7E-05	8.0E-09	3.0E-04	4.0E-11	1.5E-06
Zr-97	2.6E-07	9.6E-03	1.3E-09	4.8E-05				
Nb-95	4.2E-07	1.5E-02	2.1E-09	7.7E-05	5.5E-09	2.0E-04	2.9E-11	1.1E-06

© 2007 UniStar Nuclear Services, LLC. All rights reserved.
COPYRIGHT PROTECTED

Table 3.5-3—Secondary Coolant Radionuclide Concentrations

(Page 2 of 3)

	Design Basis Liquid		Design Basis Steam		Realistic Source Term-Liquid[e]		Realistic Source Term-Steam[e]	
Radionuclide	**µCi/gm**	**Bq/gm**	**µCi/gm**	**Bq/gm**	**µCi/gm**	**Bq/gm**	**µCi/gm**	**Bq/gm**
Mo-99	4.6E-04	1.7E+01	2.3E-06	8.5E-02	1.3E-07	4.9E-03	6.3E-10	2.3E-05
Tc-99M	2.6E-04	9.8E+00	1.3E-06	4.9E-02	7.3E-08	2.7E-03	3.8E-10	1.4E-05
Ru-103	3.4E-07	1.3E-02	1.7E-09	6.4E-05	1.6E-07	5.8E-03	8.0E-10	3.0E-05
Ru-105	2.8E-07	1.0E-02	1.4E-09	5.2E-05				
Ru-106	1.2E-07	4.4E-03	6.0E-10	2.2E-05	1.9E-06	6.8E-02	9.0E-09	3.3E-04
Rh-103M	3.1E-07	1.1E-02	1.5E-09	5.7E-05				
Rh-105	2.0E-07	7.4E-03	1.0E-09	3.7E-05				
Rh-106	1.2E-07	4.4E-03	6.0E-10	2.2E-05				
Ag-110M	8.8E-10	3.3E-05	4.4E-12	1.6E-07	2.7E-08	9.8E-04	1.4E-10	5.0E-06
Ag-110	1.2E-11	4.4E-07	5.9E-14	2.2E-09				
Sb-125	3.5E-09	1.3E-04	1.8E-11	6.6E-07				
Sb-127	2.2E-08	8.1E-04	1.1E-10	4.0E-06				
Sb-129	1.9E-08	7.1E-04	9.6E-11	3.6E-06				
Te-127M	2.0E-06	7.3E-02	9.8E-09	3.6E-04				
Te-127	8.1E-06	3.0E-01	4.0E-08	1.5E-03				
Te-129M	6.4E-06	2.4E-01	3.2E-08	1.2E-03	3.9E-09	1.5E-04	2.0E-11	7.3E-07
Te-129	6.3E-06	2.3E-01	3.1E-08	1.2E-03	1.7E-07	6.2E-03	8.3E-10	3.1E-05
Te-131M	1.5E-05	5.6E-01	7.7E-08	2.8E-03	3.0E-08	1.1E-03	1.5E-10	5.6E-06
Te-131	4.6E-06	1.7E-01	2.3E-08	8.5E-04	2.3E-08	8.5E-04	1.2E-10	4.4E-06
Te-132	1.8E-04	6.5E+00	8.8E-07	3.3E-02	3.5E-08	1.3E-03	1.7E-10	6.4E-06
Te-134	6.4E-06	2.4E-01	3.2E-08	1.2E-03				
Ba-137M	8.1E-04	3.0E+01	4.1E-06	1.5E-01				
Ba-139	3.9E-05	1.4E+00	1.9E-07	7.0E-03				
Ba-140	2.7E-06	1.0E-01	1.4E-08	5.1E-04	2.6E-07	9.7E-03	1.3E-09	4.9E-05
La-140	8.4E-07	3.1E-02	4.2E-09	1.6E-04	5.1E-07	1.9E-02	2.5E-09	9.3E-05
La-141	1.5E-07	5.5E-03	7.4E-10	2.8E-05				
La-142	5.6E-08	2.1E-03	2.8E-10	1.0E-05				
Ce-141	3.9E-07	1.5E-02	2.0E-09	7.3E-05	3.1E-09	1.1E-04	1.6E-11	5.8E-07
Ce-143	3.1E-07	1.2E-02	1.6E-09	5.8E-05	5.5E-08	2.0E-03	2.8E-10	1.0E-05
Ce-144	3.1E-07	1.1E-02	1.5E-09	5.7E-05	8.0E-08	3.0E-03	4.1E-10	1.5E-05
Pr-143	3.9E-07	1.4E-02	2.0E-09	7.2E-05				
Pr-144	3.1E-07	1.1E-02	1.5E-09	5.7E-05				
Nd-147	1.5E-07	5.6E-03	7.6E-10	2.8E-05				
Np-239	3.7E-06	1.4E-01	1.9E-08	6.9E-04	4.5E-08	1.7E-03	2.2E-10	8.3E-06
Pu-238	8.9E-10	3.3E-05	4.4E-12	1.6E-07				
Pu-239	9.0E-11	3.3E-06	4.5E-13	1.7E-08				
Pu-240	1.2E-10	4.6E-06	6.2E-13	2.3E-08				
Pu-241	3.1E-08	1.1E-03	1.5E-10	5.7E-06				
Am-241	3.5E-11	1.3E-06	1.7E-13	6.4E-09				
Cm-242	8.3E-09	3.1E-04	4.2E-11	1.5E-06				
Cm-244	4.6E-10	1.7E-05	2.3E-12	8.4E-08				
Activation Products[d]								
Na-24	3.5E-05	1.3E+00	1.8E-07		6.5E-03	8.9E-07	3.3E-02	4.5E-09
Cr-51	2.2E-06	8.2E-02	1.1E-08		4.1E-04	6.5E-08	2.4E-03	3.2E-10
Mn-54	1.1E-06	4.1E-02	5.6E-09		2.1E-04	3.3E-08	1.2E-03	1.7E-10
Fe-55	8.5E-07	3.1E-02	4.2E-09		1.6E-04	2.5E-08	9.3E-04	1.3E-10
Fe-59	2.1E-07	7.8E-03	1.1E-09		4.1E-05	6.0E-09	2.2E-04	3.1E-11

© 2007 UniStar Nuclear Services, LLC. All rights reserved.
COPYRIGHT PROTECTED

Table 3.5-3—Secondary Coolant Radionuclide Concentrations

(Page 3 of 3)

	Design Basis Liquid		Design Basis Steam		Realistic Source Term-Liquid[e]		Realistic Source Term-Steam[e]	
Radionuclide	**µCi/gm**	**Bq/gm**	**µCi/gm**	**Bq/gm**	**µCi/gm**	**Bq/gm**	**µCi/gm**	**Bq/gm**
Co-58	3.2E-06	1.2E-01	1.6E-08		5.9E-04	9.5E-08	3.5E-03	4.7E-10
Co-60	3.8E-07	1.4E-02	1.9E-09		7.0E-05	1.1E-08	4.1E-04	5.5E-11
Zn-65	3.6E-07	1.3E-02	1.8E-09		6.7E-05	1.1E-08	4.1E-04	5.0E-11
W1-87	1.8E-06	6.7E-02	9.1E-09		3.4E-04	4.9E-08	1.8E-03	2.5E-10
Nitrogen								
N-16					6.9E-07	2.6E-02	6.9E-08	2.6E-03
Tritium[d]								
H-3	4.0E+32	1.5E+27	4.0E+00	1.5E+05	1.0E-03	3.7E+01	1.0E-03	3.7E+01

Notes:

For design basis concentrations, the following conditions apply:

© 2007 UniStar Nuclear Services, LLC. All rights reserved.
COPYRIGHT PROTECTED

Table 3.5-4—Principal Parameters Used in Estimating Realistic Releases of Radioactive Materials in Effluents (GALE Code Input Parameters)

(Page 1 of 4)

Item	GALE Input Parameter	Value
0	Name and Type of Reactor	U.S. EPR PWR
1	Thermal Power Level (MWth) (4,590 MWth + 22 MWth measurement uncertainty)	4,612 MWth (4.612E9 J/sec)
2	Mass of Coolant in Primary System (RCS dry nominal volume - not including the pressurizer) (13,596 ft^3/0.02290 ft^3/lbm)	5.937E5 lbm (2.693E5 kg)
3	Primary System Letdown Rate (7.94E+04 lbm/h x 0.0229 ft^3/lbm x 7.48 gal/ft^3 x 1 min/60 sec = 226.7 gpm)	226.7 gpm (0.858 m^3/min
4	Letdown Cation Demineralizer Flow Rate (No purification system cation demineralizer)	0 gpm (0 l/min)
5	Number of steam generators	4
6	Total steam flow (Nominal 4 x 5.168E+06 = 20.67E+06 lbm/hr Increase by 1.05 to account for higher thermal power = 21.71E+06 lbm/hr)	2.171E7 lbm/hr (9.845E6 kg/hr)
7	Mass of liquid in secondary side of each steam generator (SG)	1.6977E5 lbm (7.7006E5 kg)
8	SG Blowdown rate (Nominal 4 x 0.052E+06 lbm/hr = 208E+03 lbm/hr Adjust by 1.05 to account for higher thermal power 208 x 1.05 = 218.4E+03)	2.184E5 lbm/hr (9.8901E4 kg/hr)
9	Blowdown Treatment Method (Full blowdown flow processed by Blowdown System and recycled to condensate system.)	0
10	Condensate Demineralizer Regeneration Time (days) (Regeneration not used)	0
11	Condensate Demineralizer Flow Fraction	0.33
12	Shim Bleed Flow Rate (gpd) (Shim bleed is letdown flow for boron control and the liquid is recycled. The nominal flow is: 500 lbm/hr x 0.0229 ft^3/lbm x 7.48 gal/ft^3 x 24 hr/day = 2,056 gpd Adjusting by 1.05 to account for higher thermal power yields 2,158 gpd. The analysis will conservatively assume that 5 percent of the processed shim bleed flow 2,158 x 0.05 = 107.9 rounded to 110 gpd is liquid waste)	110 gpd (416 l/day)
13	Shim Bleed DF for Iodine (With Liquid Waste Storage and Processing System Demineralizer)	1.0E4
14	Shim Bleed DF for Cesium and Rubidium (With Liquid Waste Storage and Processing System Demineralizer)	1.0E7
15	Shim Bleed DF for Other Nuclides (With Liquid Waste Storage and Processing System Demineralizer)	1.0E7
16	Shim Bleed Collection Time (days) $\frac{18500\ \text{gal}}{(\frac{110+1728\ \text{gal}}{\text{day}})} * 0.8 = 8.05 = 8.1\ \text{days}$ (The collection time is for one tank. The collection time includes 1,728 gpd (6,541 lpd) from equipment drains.)	8.1 days
17	Shim Bleed Processing and Discharge Times (days) $\frac{18500\ \text{gal}}{(\frac{1.1\ \text{kg}}{\text{sec}}) * (\frac{1\text{E - 3 m}^3}{1\ \text{kg}}) * (\frac{8.64\text{E4 sec}}{\text{d}})} * 0.8 = 0.589\ \text{days}$	0.589 days
18	Shim Bleed Average Fraction of Waste to be Discharged (There is no recycling of liquid radioactive waste.)	1.0

© 2007 UniStar Nuclear Services, LLC. All rights reserved.
COPYRIGHT PROTECTED

Table 3.5-4—Principal Parameters Used in Estimating Realistic Releases of Radioactive Materials in Effluents (GALE Code Input Parameters)

(Page 2 of 4)

Item	GALE Input Parameter	Value
19	Equipment Drains Input (gpd) (Based on U.S. EPR Standard Technical Specification limit on unidentified leakage of 1 gpm (3.79 lpm). Assumes collected by floor drains. Twenty percent added for conservatism.)	1,728 gal/day 6,541 l/day
20	Equipment Drains Primary Coolant Activity (PCA)	1.0
21	Equipment Drains DF for Iodine (With Liquid Waste Storage and Processing System Demineralizer)	1.0E4
22	Equipment Drains DF for Cesium and Rubidium (With Liquid Waste Storage and Processing System Demineralizer)	1.0E7
23	Equipment Drains DF for Other Nuclides (With Liquid Waste Storage and Processing System Demineralizer)	1.0E7
24	Equipment Drains Collection Time (days) (Includes 110 gpd (416.4 lpd) from shim bleed.) $\frac{70\,m^3}{(\frac{110+1728\,gal}{day})*(\frac{m^3}{264.17\,gal})}*0.8=8.1\,days$ (Includes 110 gpd (416.4 lpd) from shim bleed.)	8.1 days
25	Equipment Drains Processing and Discharge Times (days) $\frac{70\,m^3}{(\frac{1.1\,kg}{sec})*(\frac{1E-3\,m^3}{1\,kg})*(\frac{8.64E4\,sec}{d})}*0.8=0.589\,days$	0.589 days
26	Equipment Drains Average Fraction of Waste to be Discharged (There is no recycling of liquid radioactive waste.)	1.0
27	Clean Waste Input (gpd) (Clean Waste included as Group II.) (Conservative – 66,000 gal/week / 7 day/week = 9,428 gallons per day)	9,428 gal/day 35,690 l/day
28	Clean Waste PCA	0.001
29	Clean Waste DF for Iodine (With Liquid Waste Storage and Processing System Demineralizer)	1.0E2
30	Clean Waste DF for Cesium and Rubidium (With Liquid Waste Storage and Processing System Demineralizer)	1.0E2
31	Clean Waste DF for Other Nuclides (With Liquid Waste Storage and Processing System Demineralizer)	1.0E2
32	Clean Waste Collection Time (days) $\frac{70\,m^3}{(\frac{250\,m^3}{week})*(\frac{week}{7\,d})}*0.8=1.6\,days$	1.6 days
33	Clean Waste Processing and Discharge Times (days) $\frac{70\,m^3}{(\frac{1.4\,kg}{sec})*(\frac{1E-3\,m^3}{1\,kg})*(\frac{8.64E4\,sec}{d})}*0.8=0.463\,days$	0.463
34	Clean Waste Average Fraction of Waste to be Discharged (There is no recycling of liquid radioactive waste.)	1.0
35	Dirty Waste Input (gpd) (Group III waste is normally not radioactive and it is neglected to maximize concentrations)	0 gal/day (0 l/day)

© 2007 UniStar Nuclear Services, LLC. All rights reserved.
COPYRIGHT PROTECTED

Table 3.5-4—Principal Parameters Used in Estimating Realistic Releases of Radioactive Materials in Effluents (GALE Code Input Parameters)

(Page 3 of 4)

Item	GALE Input Parameter	Value
36	Dirty Waste PCA (N/A since input is 0 gallons.per day)	0.1
37	Dirty Waste DF for Iodine (N/A since input is 0 gallons.per day)	1.0E2
38	Dirty Waste DF for Cesium and Rubidium (N/A since input is 0 gallons.per day)	1.0E3
39	Dirty Waste DF for Other Nuclides (N/A since input is 0 gallons.per day)	1.0E3
40	Dirty Waste Collection Time (days) (N/A since input is 0 gallons.per day)	0
41	Dirty Waste Processing and Discharge Times (days) (N/A since input is 0 gallons.per day)	0
42	Dirty Waste Average Fraction of Waste to be Discharged (There is no recycling of liquid radioactive waste.)	1.0
43	Blowdown Fraction Processed	1.0
44	Blowdown DF for Iodine (1 in the cation bed x 100 in the mixed bed = 100 overall)	1.0E+02
45	Blowdown DF for Cesium and Rubidium (10 in the cation bed x 10 in the mixed bed = 100 overall)	1.0E+02
46	Blowdown DF for Other Nuclides (10 in the cation bed x 100 in the mixed bed = 100 overall)	1.0E+03
47	Blowdown Collection Time (days)	0 days
48	Blowdown Processing and Discharge Times (days)	0 days
49	Blowdown Average Fraction of Waste to be Discharged	0.0
50	Regenerant Flow Rate (gpd) (Regeneration not used)	0.0
51	Regenerant DF for Iodine	1.0
52	Regenerant DF for Cesium and Rubidium	1.0
53	Regenerant DF for Other Nuclides	1.0
54	Regenerant Collection Time (days)	0.0
55	Regenerant Processing and Discharge Times (days)	0.0
56	Regenerant Average Fraction of Waste to be Discharged	0.0
57	Is There Continuous Stripping of Full Letdown Flow? (The degasification is normally operated prior to refueling, prior to maintenance of the reactor coolant circuit or if required to decrease the concentration of gaseous reactivity. Value of 'Y' for card 30 is ratio of total amount of noble gases routed to gaseous radwaste from the purification system to total routed from the primary coolant system. Options are 0, 0.25, 1. This is a recycled loop during normal operations, and very little of the flow ends up in delay beds, the value of 0 best represents system.)	No
58	Holdup Time for Xenon (days)	27.7 days
59	Holdup Time for Krypton (days)	1.67 days
60	Fill Time of Decay Tanks for the Gas Stripper (Days) (Discharged directly to the stack.)	0 days
61	Waste Gas System Particulate Releases HEPA Efficiency (%)	99 %
62	Fuel Handling Building Releases: Charcoal Efficiency (%) (HEPA and Charcoal efficiencies for non-ESF systems taken to be the same as Gaseous Waste Processing System)	90 %
63	Fuel Handling Building Releases: HEPA Efficiency (%) (HEPA and Charcoal efficiencies for non-ESF systems taken to be the same as Gaseous Waste Processing System)	99 %
64	Auxiliary Building Releases: Charcoal Efficiency (%) (HEPA and Charcoal efficiencies for non-ESF systems taken to be the same as Gaseous Waste Processing System)	90 %

© 2007 UniStar Nuclear Services, LLC. All rights reserved.
COPYRIGHT PROTECTED

Table 3.5-4—Principal Parameters Used in Estimating Realistic Releases of Radioactive Materials in Effluents (GALE Code Input Parameters)

(Page 4 of 4)

Item	GALE Input Parameter	Value
65	Auxiliary Building Releases: HEPA Efficiency (%) (HEPA and Charcoal efficiencies for non-ESF systems taken to be the same as Gaseous Waste Processing System)	99 %
66	Containment Free Volume.	2.8E+06 ft^3 (7.9E+4 m^3)
67	Containment Internal Cleanup System: Charcoal Efficiency (%) (HEPA and Charcoal efficiencies for non-ESF systems taken to be the same as Gaseous Waste Processing System)	90 %
68	Containment Internal Cleanup System: HEPA Efficiency (%) (HEPA and Charcoal efficiencies for non-ESF systems taken to be the same as Gaseous Waste Processing System)	99 %
69	Containment Internal Cleanup System: Flow Rate	4.1 E+03 cfm (1.9 m^3/sec)
70	Containment High Volume Purge: Charcoal Efficiency (%) (HEPA and Charcoal efficiencies for non-ESF systems taken to be the same as Gaseous Waste Processing System)	90 %
71	Containment High Volume Purge: HEPA Efficiency (%) (HEPA and Charcoal efficiencies for non-ESF systems taken to be the same as Gaseous Waste Processing System)	99 %
72	Containment High Volume Purge: Purges per Year	0
73	Containment Low Volume Purge: Charcoal Efficiency (%)	90 %
74	Containment Low Volume Purge: HEPA Efficiency (%)	99 %
75	Containment Low Volume Purge: Flow Rate (cfm)	2,970 cfm (1.40 m^3/sec)
76	Percent of Iodine Released from Blowdown Tank Vent	0.0 %
77	Percent of Iodine Removed from Air Ejector Release (No condenser air ejectors, mechanical vacuum pumps vent to stack without treatment)	0.0 %
78	Detergent Waste PF (No onsite laundry)	0.0
79	SG blowdown flash tank gases vented via main condenser air ejector?	No
80	Condenser air ejector offgas released without treatment? (No condenser air ejectors, mechanical vacuum pumps vent to stack without treatment)	Yes
81	Condenser air ejector offgas processed via charcoal adsorbers prior to release? (No condenser air ejectors, mechanical vacuum pumps vent to stack without treatment)	No
82	Average flow rate of water used to dilute liquid waste discharged to the environment.	100 cfs (2.83 m^3/sec)
83	Number of Main Condenser Water Boxes	3
84	Main Condenser Water Box liquid volume (each) (nominal operating conditions) (ft^3) (m^3)	6,357 ft^3 (180 m^3)
85	Main Condenser Water Box temperature (nominal operating conditions) (°F) (°C)	69.4 °F (20.8 °C)
86	Main Condenser Water Box pressure (nominal operating conditions) (millibars)	24.7

© 2007 UniStar Nuclear Services, LLC. All rights reserved.
COPYRIGHT PROTECTED

Table 3.5-5—Average Radioactivity Concentrations in the Spent Fuel Pool (SFP) Area

(Page 1 of 2)

Nuclide	SFP Water Activity		SFP Airborne Activity	
	(µCi/cm³)	(MBq/cm³)	(µCi/cm³)	(MBq/cm³)
H- 3	5.9E-01	2.18E-02	2.67E-06	9.88E-08
Na-24	1.13E-06	4.18E-08	5.10E-12	1.89E-13
Cr-51	6.01E-06	2.22E-07	2.72E-11	1.01E-12
Mn-54	3.40E-06	1.26E-07	1.54E-11	5.70E-13
Fe-55	2.57E-06	9.51E-08	1.17E-11	4.33E-13
Fe-59	6.06E-07	2.24E-08	2.76E-12	1.02E-13
Co-58	9.50E-06	3.52E-07	4.30E-11	1.59E-12
Co-60	1.14E-06	4.22E-08	5.15E-11	1.91E-13
Zn-65	1.08E-06	4.00E-08	4.91E-12	1.82E-13
Br-83	2.43E-17	8.99E-19	1.07E-22	3.96E-34
Kr-83M	4.87E-16	1.80E-17	2.13E-21	7.88E-23
Kr-85M	1.18E-10	4.37E-12	5.28E-1	1.95E-17
Kr-85	4.33E-03	1.60E+04	1.96E-08	7.25E-10
Kr-87	3.71E-26	1.37E-27	1.60E-31	5.92E-33
Kr-88	6.73E-14	2.49E-15	2.98E-19	1.10E-20
Rb-88	6.79E-14	2.51E-15	3.06E-19	1.13E-20
Sr-89	1.52E-07	5.62E-09	6.89E-12	2.55E-14
Sr-90	1.69E-08	6.25E-10	7.67E-14	2.84E-15
Sr-91	1.42E-10	5.25E-12	6.39E-16	2.36E-17
Sr-92	4.58E-18	1.69E-19	2.02E-23	7.47E-25
Y-90	4.69E-09	1.74E-10	2.13E-14	7.88E-16
Y-91M	7.84E-11	2.90E-12	3.56E-16	1.33E-17
Y-91	3.01E-08	1.11E-09	1.36E-13	5.03E-15
Y-92	8.42E-16	3.12E-11	3.21E-20	1.19E-15
Y-93	3.95E-11	1.46E-06	1.68E-15	6.22E-11
Zr-95	3.50E-08	1.30E-03	1.59E-12	5.88E-08
Nb-95	3.67E-08	1.36E-09	1.66E-13	6.14E-15
Mo-99	1.75E-05	6.48E-07	7.92E-11	2.93E-12
Tc-99M	9.60E-06	3.55E-07	4.38E-10	1.62E-12
Ru-103	3.59E-08	1.33E-09	1.63E-13	6.03E-15
Ru-106	2.27E-08	8.40E-10	1.03E-13	3.81E-15
Rh-103M	3.24E-08	1.20E-09	1.47E-13	5.44E-15
Rh-106	2.27E-08	8.40E-10	1.03E-13	3.81E-15
Ag-110M	3.83E-10	1.42E-11	1.74E-145	6.44E-17
Te-127M	2.41E-07	8.92E-09	1.10E-12	4.03E-14
Te-129M	6.52E-07	2.41E-08	2.95E-11	1.09E-13
Te-129	4.24E-07	1.57E-08	1.92E-12	7.140E-14
Te-131M	1.92E-07	7.10E-09	8.70E-13	3.22E-14
Te-131	4.33E-08	1.60E-09	1.96E-13	7.26E-15
Te-132	7.92E-06	2.93E-07	3.59E-11	1.33E-12
Te-134	2.09E-45	7.73E-47	8.64E-51	3.20E-52
I-129	1.08E-11	4.00E-13	4.87E-17	1.80E-18
I-130	6.09E-08	2.25E-09	2.74E-13	1.01E-14
I-131	1.26E-04	4.66E+06	5.72E-10	2.12E-11
I-132	2.87E-05	1.06E+06	1.27E-10	4.70E-12
I-133	1.29E-05	4.77E-07	5.83E-11	2.16E-12
I-134	1.67E-35	6.18E-37	7.03E-41	2.60E-42
I-135	1.11E-08	4.11E-10	4.96E-14	1.84E-15

© 2007 UniStar Nuclear Services, LLC. All rights reserved.
COPYRIGHT PROTECTED

Table 3.5-5—Average Radioactivity Concentrations in the Spent Fuel Pool (SFP) Area

(Page 2 of 2)

Nuclide	SFP Water Activity		SFP Airborne Activity	
	(µCi/cm^3)	(MBq/cm^3)	(µCi/cm^3)	(MBq/cm^3)
Xe-131M	2.81E-04	1.04E+05	1.27E-09	4.70E-11
Xe-133M	1.39E-04	5.14E+06	6.30E-10	2.33E-11
Xe-133	1.67E-02	6.18E+04	7.54E-08	2.79E-09
Xe-135M	3.39E-09	1.25E-10	1.37E-14	5.07E-16
Xe-135	4.68E-06	1.73E-07	2.11E-10	7.81E-13
Cs-134	1.64E-04	6.07E+06	7.44E-10	2.75E-11
Cs-136	3.16E-05	1.17E+06	1.43E-10	5.29E-12
Cs-137	6.29E-05	2.33E+06	2.85E-10	1.05E-11
Ba-137M	5.92E-05	2.19E+06	2.69E-10	9.95E-12
Ba-140	2.00E-07	7.40E-09	9.04E-13	3.34E-14
La-140	6.93E-08	2.56E-09	3.15E-13	1.17E-14
Ce-141	3.29E-08	1.22E-09	1.49E-13	5.51E-15
Ce-143	4.26E-09	1.58E-10	1.93E-14	7.14E-16
Ce-144	2.70E-08	9.99E-10	1.22E-13	4.514E-15
Pr-143	3.19E-08	1.18E-09	1.44E-13	5.33E-15
Pr-144	2.70E-08	9.99E-10	1.22E-13	4.51E-15
W-187	3.17E-07	1.17E-08	1.43E-12	5.29E-14
Np-239	1.73E-07	6.40E-09	7.81E-13	2.89E-14
Total (Excluding Tritium)	2.20E-02	8.14E+04	9.94E-08	3.68E-09
Iodines	1.68E-04	6.22E+06	7.58E-10	2.80E-11
Particulates	2.58E-05	9.55E-07	1.17E-09	4.33E-12
Noble Gases	2.14E-02	7.92E+04	9.470E-08	3.59E-09

Note:
MBq/cm^3 = 1.0E6 Bq/cm^3
1

© 2007 UniStar Nuclear Services, LLC. All rights reserved.
COPYRIGHT PROTECTED

Table 3.5-6—Liquid Waste Release Source Term Inputs

Liquid Waste Inputs								
				Collection	Decay	Decontamination Factors		
Stream	Flow Rate (gal/day) (L/day)	Fraction of PCA	Fraction Discharged	Time (days)	Time (days)	I	Cs	Others
Shim Bleed Rate	1.10E+02 (4.16 E+02)	1.0	1.0	8.1	0.589	1.0E+04	1.0E+07	1.0E+07
Equipment Drains	1.73E+03 (6.55E+03)	1.0	1.0	8.1	0.589	1.0E+04	1.0E+07	1.0E+07
Clean Waste Input	9.43E+03 (3.57E+04)	0.001	1.0	1.6	0.463	1.0E+02	1.0E+02	1.0E+02
Dirty Wastes	0.00E+00 (0.00E+00)	0.1	1.0	0.0	0.0	1.0E+02	1.0E+03	1.0E+03
Blowdown	6.28E+05 (2.38E+06)		0.0	0.0	0.0	1.0E+02	1.0E+02	1.0E+03
Untreated Blowdown	0.00E+00 (0.00E+00)		1.0	0.0	0.0	1.0E+00	1.0E+00	1.0E+00
Regenerant Sols.	0.00E+00 (0.00E+00)		0.0	0.0	0.0	1.0E+00	1.0E+00	1.0E+00

© 2007 UniStar Nuclear Services, LLC. All rights reserved.
COPYRIGHT PROTECTED

Table 3.5-7—Annual Expected Liquid Waste Releases (English Units)

(Page 1 of 4)

Nuclide	Half-Life (days)	Primary (mCi/ml)	Secondary (mCi/ml)	Boron Recovery System (Ci)	Misc Wastes (Ci)	Secondary (Ci)	Turbine Building (Ci)	Total Liquid Waste Sources (Ci)	Adjusted Total (Ci/yr)	Detergent Wastes (Ci/yr)	Total (Ci/yr)
Corrosion and Activation Products											
Na-24	6.25E-01	2.84E-02	3.40E-07	0.00000	0.00104	0.00000	0.00001	0.00105	0.00613	0.00000	0.00610
Cr-51	2.78E+01	1.39E-03	1.96E-08	0.00000	0.00018	0.00000	0.00000	0.00018	0.00103	0.00000	0.00100
Mn-54	3.03E+02	7.09E-04	9.66E-09	0.00000	0.00009	0.00000	0.00000	0.00009	0.00054	0.00000	0.00054
Fe-55	9.50E+02	5.32E-04	7.28E-09	0.00000	0.00007	0.00000	0.00000	0.00007	0.00041	0.00000	0.00041
Fe-59	4.50E+01	1.34E-04	1.80E-09	0.00000	0.00002	0.00000	0.00000	0.00002	0.00010	0.00000	0.00010
Co-58	7.13E+01	2.04E-03	2.84E-08	0.00000	0.00026	0.00000	0.00000	0.00027	0.00155	0.00000	0.00150
Co-60	1.92E+03	2.35E-04	3.27E-09	0.00000	0.00003	0.00000	0.00000	0.00003	0.00018	0.00000	0.00018
Zn-65	2.45E+02	2.26E-04	3.12E-09	0.00000	0.00003	0.00000	0.00000	0.00003	0.00017	0.00000	0.00017
W-187	9.96E-01	1.38E-03	1.73E-08	0.00000	0.00008	0.00000	0.00000	0.00008	0.00046	0.00000	0.00046
Np-239	2.35E+00	1.08E-03	1.44E-08	0.00000	0.00010	0.00000	0.00000	0.00010	0.00058	0.00000	0.00058
Fission Products											
Sr-89	5.20E+01	6.23E-05	8.52E-10	0.00000	0.00001	0.00000	0.00000	0.00001	0.00005	0.00000	0.00005
Sr-91	4.03E-01	6.41E-04	7.35E-09	0.00000	0.00001	0.00000	0.00000	0.00001	0.00008	0.00000	0.00008
Y-91M	3.47E-02	5.09E-04	2.01E-09	0.00000	0.00001	0.00000	0.00000	0.00001	0.00005	0.00000	0.00005
Y- 93	4.25E-01	2.77E-03	3.09E-08	0.00000	0.00006	0.00000	0.00000	0.00006	0.00036	0.00000	0.00036
Zr-95	6.50E+01	1.73E-04	2.39E-09	0.00000	0.00002	0.00000	0.00000	0.00002	0.00013	0.00000	0.00013
Nb-95	3.50E+01	1.25E-04	1.65E-09	0.00000	0.00002	0.00000	0.00000	0.00002	0.00010	0.00000	0.00010
Mo-99	2.79E+00	3.11E-03	4.19E-08	0.00000	0.00030	0.00000	0.00000	0.00030	0.00175	0.00000	0.00180
Tc-99M	2.50E-01	3.54E-03	3.47E-08	0.00000	0.00029	0.00000	0.00000	0.00029	0.00170	0.00000	0.00170
Ru-103	3.96E+01	3.34E-03	4.65E-08	0.00000	0.00043	0.00000	0.00000	0.00043	0.00251	0.00000	0.00250
Rh-103M	3.96E-02	0.00E+00	0.00E+00	0.00000	0.00043	0.00000	0.00000	0.00043	0.00251	0.00000	0.00250
Ru-106	3.67E+02	3.99E-02	5.50E-07	0.00001	0.00518	0.00000	0.00003	0.00522	0.03050	0.00000	0.03100
Rh-106	3.47E-04	0.00E+00	0.00E+00	0.00001	0.00518	0.00000	0.00003	0.00522	0.03050	0.00000	0.03100
Ag-110M	2.53E+02	5.76E-04	7.88E-09	0.00000	0.00007	0.00000	0.00000	0.00008	0.00044	0.00000	0.00044
Ag-110	2.82E-04	0.00E+00	0.00E+00	0.00000	0.00001	0.00000	0.00000	0.00001	0.00006	0.00000	0.00006
Te-129M	3.40E+01	8.48E-05	1.17E-09	0.00000	0.00001	0.00000	0.00000	0.00001	0.00006	0.00000	0.00006
Te-129	4.79E-02	2.55E-02	1.28E-07	0.00000	0.00001	0.00000	0.00000	0.00001	0.00004	0.00000	0.00004
Te-131M	1.25E+00	7.98E-04	1.02E-08	0.00000	0.00005	0.00000	0.00000	0.00005	0.00031	0.00000	0.00031
Te-131	1.74E-02	9.04E-03	2.07E-08	0.00000	0.00001	0.00000	0.00000	0.00001	0.00006	0.00000	0.00006

© 2007 UniStar Nuclear Services, LLC. All rights reserved.
COPYRIGHT PROTECTED

Table 3.5-7—Annual Expected Liquid Waste Releases (English Units)

(Page 2 of 4)

Nuclide	Half-Life (days)	Primary (mCi/ml)	Secondary (mCi/ml)	Boron Recovery System (Ci)	Misc Wastes (Ci)	Secondary (Ci)	Turbine Building (Ci)	Total Liquid Waste Sources (Ci)	Adjusted Total (Ci/yr)	Detergent Wastes (Ci/yr)	Total (Ci/yr)
I-131	8.05E+00	2.07E-02	2.49E-07	0.00341	0.00243	0.00000	0.00002	0.00586	0.03424	0.00000	0.03400
Te-132	3.25E+00	8.15E-04	1.09E-08	0.00000	0.00008	0.00000	0.00000	0.00008	0.00048	0.00000	0.00048
I-132	9.58E-02	1.98E-01	1.34E-06	0.00001	0.00016	0.00000	0.00002	0.00020	0.00115	0.00000	0.00120
I-133	8.75E-01	7.92E-02	8.87E-07	0.00185	0.00405	0.00000	0.00007	0.00597	0.03488	0.00000	0.03500
Cs-134	7.49E+02	3.46E-03	4.87E-08	0.00000	0.00045	0.00000	0.00000	0.00045	0.00265	0.00000	0.00260
I-135	2.79E-01	1.90E-01	1.81E-06	0.00052	0.00194	0.00000	0.00010	0.00256	0.01496	0.00000	0.01500
Cs-136	1.30E+01	4.38E-04	6.16E-09	0.00000	0.00005	0.00000	0.00000	0.00005	0.00031	0.00000	0.00031
Cs-137	1.10E+04	4.57E-03	6.49E-08	0.00000	0.00060	0.00000	0.00000	0.00060	0.00351	0.00000	0.00350
Ba-137M	1.77E-03	0.00E+00	0.00E+00	0.00000	0.00056	0.00000	0.00000	0.00056	0.00328	0.00000	0.00330
Ba-140	1.28E+01	5.88E-03	7.94E-08	0.00000	0.00072	0.00000	0.00000	0.00072	0.00421	0.00000	0.00420
La-140	1.67E+00	1.28E-02	1.67E-07	0.00000	0.00130	0.00000	0.00001	0.00131	0.00763	0.00000	0.00760
Ce-141	3.24E+01	6.70E-05	9.16E-10	0.00000	0.00001	0.00000	0.00000	0.00001	0.00005	0.00000	0.00005
Ce-143	1.38E+00	1.47E-03	1.86E-08	0.00000	0.00010	0.00000	0.00000	0.00010	0.00061	0.00000	0.00061
Pr-143	1.37E+01	0.00E+00	0.00E+00	0.00000	0.00001	0.00000	0.00000	0.00001	0.00005	0.00000	0.00005
Ce-144	2.84E+02	1.73E-03	2.38E-08	0.00000	0.00022	0.00000	0.00000	0.00023	0.00132	0.00000	0.00130
Pr-144	1.20E-02	0.00E+00	0.00E+00	0.00000	0.00022	0.00000	0.00000	0.00023	0.00132	0.00000	0.00130
All Others		6.25E-01	1.89E-06	0.00000	0.00000	0.00000	0.00000	0.00000	0.00002	0.00000	0.00002
Total (Except Tritium)		1.27E+00	7.93E-06	0.00582	0.02690	0.00000	0.00033	0.03304	0.19304	0.00000	0.19000
Tritium Release		1.66E+03 Curies per year									

Note:
0.00000 indicates that the value is less than 1.0E-05.

Corrosion and Activation Products											
Na-24	6.25E-01	1.05E+03	1.26E-02	0.00E+00	3.85E+07	0.00E+00	3.70E+05	3.89E+07	2.27E+08	0.00E+00	2.26E+08
Cr-51	2.78E+01	5.14E+01	7.25E-04	0.00E+00	6.66E+06	0.00E+00	0.00E+00	6.66E+06	3.81E+07	0.00E+00	3.70E+07
Mn-54	3.03E+02	2.62E+01	3.57E-04	0.00E+00	3.33E+06	0.00E+00	0.00E+00	3.33E+06	2.00E+07	0.00E+00	2.00E+07
Fe-55	9.50E+02	1.97E+01	2.69E-04	0.00E+00	2.59E+06	0.00E+00	0.00E+00	2.59E+06	1.52E+07	0.00E+00	1.52E+07
Fe-59	4.50E+01	4.96E+00	6.66E-05	0.00E+00	7.40E+05	0.00E+00	0.00E+00	7.40E+05	3.70E+06	0.00E+00	3.70E+06
Co-58	7.13E+01	7.55E+01	1.05E-03	0.00E+00	9.62E+06	0.00E+00	0.00E+00	9.99E+06	5.74E+07	0.00E+00	5.55E+07
Co-60	1.92E+03	8.70E+00	1.21E-04	0.00E+00	1.11E+06	0.00E+00	0.00E+00	1.11E+06	6.66E+06	0.00E+00	6.66E+06
Zn-65	2.45E+02	8.36E+00	1.15E-04	0.00E+00	1.11E+06	0.00E+00	0.00E+00	1.11E+06	6.29E+06	0.00E+00	6.29E+06
W-187	9.96E-01	5.11E+01	6.40E-04	0.00E+00	2.96E+06	0.00E+00	0.00E+00	2.96E+06	1.70E+07	0.00E+00	1.70E+07

© 2007 UniStar Nuclear Services, LLC. All rights reserved.
COPYRIGHT PROTECTED

Table 3.5-7—Annual Expected Liquid Waste Releases (English Units)

(Page 3 of 4)

Nuclide	Half-Life (days)	Primary (mCi/ml)	Secondary (mCi/ml)	Boron Recovery System (Ci)	Misc Wastes (Ci)	Secondary (Ci)	Turbine Building (Ci)	Total Liquid Waste Sources (Ci)	Adjusted Total (Ci/yr)	Detergent Wastes (Ci/yr)	Total (Ci/yr)
Np-239	2.35E+00	4.00E+01	5.33E-04	0.00E+00	3.70E+06	0.00E+00	0.00E+00	3.70E+06	2.15E+07	0.00E+00	2.15E+07
Fission Products											
Sr-89	5.20E+01	2.31E+00	3.15E-05	0.00E+00	3.70E+05	0.00E+00	0.00E+00	3.70E+05	1.85E+06	0.00E+00	1.85E+06
Sr-91	4.03E-01	2.37E+01	2.72E-04	0.00E+00	3.70E+05	0.00E+00	0.00E+00	3.70E+05	2.96E+06	0.00E+00	2.96E+06
Y-91M	3.47E-02	1.88E+01	7.44E-05	0.00E+00	3.70E+05	0.00E+00	0.00E+00	3.70E+05	1.85E+06	0.00E+00	1.85E+06
Y-93	4.25E-01	1.02E+02	1.14E-03	0.00E+00	2.22E+06	0.00E+00	0.00E+00	2.22E+06	1.33E+07	0.00E+00	1.33E+07
Zr-95	6.50E+01	6.40E+00	8.84E-05	0.00E+00	7.40E+05	0.00E+00	0.00E+00	7.40E+05	4.81E+06	0.00E+00	4.81E+06
Nb-95	3.50E+01	4.63E+00	6.11E-05	0.00E+00	7.40E+05	0.00E+00	0.00E+00	7.40E+05	3.70E+06	0.00E+00	3.70E+06
Mo-99	2.79E+00	1.15E+02	1.55E-03	0.00E+00	1.11E+07	0.00E+00	0.00E+00	1.11E+07	6.48E+07	0.00E+00	6.66E+07
Tc-99M	2.50E-01	1.31E+02	1.28E-03	0.00E+00	1.07E+07	0.00E+00	0.00E+00	1.07E+07	6.29E+07	0.00E+00	6.29E+07
Ru-103	3.96E+01	1.24E+02	1.72E-03	0.00E+00	1.59E+07	0.00E+00	0.00E+00	1.59E+07	9.29E+07	0.00E+00	9.25E+07
Rh-103M	3.96E-02	0.00E+00	0.00E+00	0.00E+00	1.59E+07	0.00E+00	0.00E+00	1.59E+07	9.29E+07	0.00E+00	9.25E+07
Ru-106	3.67E+02	1.48E+03	2.04E-02	3.70E+05	1.92E+08	0.00E+00	1.11E+06	1.93E+08	1.13E+09	0.00E+00	1.15E+09
Rh-106	3.47E-04	0.00E+00	0.00E+00	3.70E+05	1.92E+08	0.00E+00	1.11E+06	1.93E+08	1.13E+09	0.00E+00	1.15E+09
Ag-110M	2.53E+02	2.13E+01	2.92E-04	0.00E+00	2.59E+06	0.00E+00	0.00E+00	2.96E+06	1.63E+07	0.00E+00	1.63E+07
Ag-110	2.82E-04	0.00E+00	0.00E+00	0.00E+00	3.70E+05	0.00E+00	0.00E+00	3.70E+05	2.22E+06	0.00E+00	2.22E+06
Te-129M	3.40E+01	3.14E+00	4.33E-05	0.00E+00	3.70E+05	0.00E+00	0.00E+00	3.70E+05	2.22E+06	0.00E+00	2.22E+06
Te-129	4.79E-02	9.44E+02	4.74E-03	0.00E+00	3.70E+05	0.00E+00	0.00E+00	3.70E+05	1.48E+06	0.00E+00	1.48E+06
Te-131M	1.25E+00	2.95E+01	3.77E-04	0.00E+00	1.85E+06	0.00E+00	0.00E+00	1.85E+06	1.15E+07	0.00E+00	1.15E+07
Te-131	1.74E-02	3.34E+02	7.66E-04	0.00E+00	3.70E+05	0.00E+00	0.00E+00	3.70E+05	2.22E+06	0.00E+00	2.22E+06
I-131	8.05E+00	7.66E+02	9.21E-03	1.26E+08	8.99E+07	0.00E+00	7.40E+05	2.17E+08	1.27E+09	0.00E+00	1.26E+09
Te-132	3.25E+00	3.02E+01	4.03E-04	0.00E+00	2.96E+06	0.00E+00	0.00E+00	2.96E+06	1.78E+07	0.00E+00	1.78E+07
I-132	9.58E-02	7.33E+03	4.96E-02	3.70E+05	5.92E+06	0.00E+00	7.40E+05	7.40E+06	4.26E+07	0.00E+00	4.44E+07
I-133	8.75E-01	2.93E+03	3.28E-02	6.85E+07	1.50E+08	0.00E+00	2.59E+06	2.21E+08	1.29E+09	0.00E+00	1.30E+09
Cs-134	7.49E+02	1.28E+02	1.80E-03	0.00E+00	1.67E+07	0.00E+00	0.00E+00	1.67E+07	9.81E+07	0.00E+00	9.62E+07
I-135	2.79E-01	7.03E+03	6.70E-02	1.92E+07	7.18E+07	0.00E+00	3.70E+06	9.47E+07	5.54E+08	0.00E+00	5.55E+08
Cs-136	1.30E+01	1.62E+01	2.28E-04	0.00E+00	1.85E+06	0.00E+00	0.00E+00	1.85E+06	1.15E+07	0.00E+00	1.15E+07
Cs-137	1.10E+04	1.69E+02	2.40E-03	0.00E+00	2.22E+07	0.00E+00	0.00E+00	2.22E+07	1.30E+08	0.00E+00	1.30E+08
Ba-137M	1.77E-03	0.00E+00	0.00E+00	0.00E+00	2.07E+07	0.00E+00	0.00E+00	2.07E+07	1.21E+08	0.00E+00	1.22E+08
Ba-140	1.28E+01	2.18E+02	2.94E-03	0.00E+00	2.66E+07	0.00E+00	0.00E+00	2.66E+07	1.56E+08	0.00E+00	1.55E+08

© 2007 UniStar Nuclear Services, LLC. All rights reserved.
COPYRIGHT PROTECTED

Table 3.5-7—Annual Expected Liquid Waste Releases (English Units)

(Page 4 of 4)

Nuclide	Half-Life (days)	Primary (mCi/ml)	Secondary (mCi/ml)	Boron Recovery System (Ci)	Misc Wastes (Ci)	Secondary (Ci)	Turbine Building (Ci)	Total Liquid Waste Sources (Ci)	Adjusted Total (Ci/yr)	Detergent Wastes (Ci/yr)	Total (Ci/yr)
La-140	1.67E+00	4.74E+02	6.18E-03	0.00E+00	4.81E+07	0.00E+00	3.70E+05	4.85E+07	2.82E+08	0.00E+00	2.81E+08
Ce-141	3.24E+01	2.48E+00	3.39E-05	0.00E+00	3.70E+05	0.00E+00	0.00E+00	3.70E+05	1.85E+06	0.00E+00	1.85E+06
Ce-143	1.38E+00	5.44E+01	6.88E-04	0.00E+00	3.70E+06	0.00E+00	0.00E+00	3.70E+06	2.26E+07	0.00E+00	2.26E+07
Pr-143	1.37E+01	0.00E+00	0.00E+00	0.00E+00	3.70E+05	0.00E+00	0.00E+00	3.70E+05	1.85E+06	0.00E+00	1.85E+06
Ce-144	2.84E+02	6.40E+01	8.81E-04	0.00E+00	8.14E+06	0.00E+00	0.00E+00	8.51E+06	4.88E+07	0.00E+00	4.81E+07
Pr-144	1.20E-02	0.00E+00	0.00E+00	0.00E+00	8.14E+06	0.00E+00	0.00E+00	8.51E+06	4.88E+07	0.00E+00	4.81E+07
All Others		2.31E+04	6.99E-02	0.00E+00	0.00E+00	0.00E+00	0.00E+00	0.00E+00	7.40E+05	0.00E+00	7.40E+05
Total (Except Tritium)		4.70E+04	2.93E-01	2.15E+08	9.95E+08	0.00E+00	1.22E+07	1.22E+09	7.14E+09	0.00E+00	7.03E+09
Tritium Release		6.14E+13 Becquerel per year									

Note:
0.00000 indicates that the value is less than 1.0E-05.

© 2007 UniStar Nuclear Services, LLC. All rights reserved.
COPYRIGHT PROTECTED

Table 3.5-8—Annual Gaseous Effluent Releases (English Units)

(Page 1 of 4)

Nuclide	Primary Coolant (μCi/gm)	Secondary Coolant (μCi/gm)	Building Ventilation				Blowdown Vent Offgas (Ci/yr)	Main Condenser Removal (Ci/yr)	Total (Ci/yr)
			Fuel Handling (Ci/yr)	Reactor (Ci/yr)	Auxiliary (Ci/yr)	Turbine (Ci/yr)			
I-131	2.070E-02	2.510E-07	2.7E-04	1.9E-03	6.6E-03	0.0E+00	0.0E+00	0.0E+00	8.8E-03
I-133	7.917E-02	8.930E-07	1.0E-03	5.8E-03	2.5E-02	0.0E+00	0.0E+00	0.0E+00	3.2E-02
Total H-3 Released via Gaseous Pathway = 180 Ci/yr									
C-14 Released via Gaseous Pathway = 7.3 Ci/yr									
Ar-41 Released via Gaseous Pathway = 34 Ci/yr									

Nuclide	Primary Coolant (μCi/gm)	Secondary Coolant (μCi/gm)	Gas Stripping		Building Ventilation			Blowdown Vent Offgas (Ci/yr)	Main Condenser Removal (Ci/yr)	Total (Ci/yr)
			Shutdown (Ci/yr)	Continuous (Ci/yr)	Reactor (Ci/yr)	Auxiliary (Ci/yr)	Turbine (Ci/yr)			
Kr-85m	2.021E-01	2.968E-08	0.0E+00	0.0E+00	1.4E+02	4.0E+00	0.0E+00	0.0E+00	2.0E+00	1.5E+02
Kr-85	6.836E+00	9.777E-07	3.7E+03	1.4E+04	1.6E+04	1.4E+02	0.0E+00	0.0E+00	6.8E+01	3.4E+04
Kr-87	1.888E-01	2.609E-08	0.0E+00	0.0E+00	4.7E+01	4.0E+00	0.0E+00	0.0E+00	2.0E+00	5.3E+01
Kr-88	3.530E-01	5.140E-08	0.0E+00	0.0E+00	1.7E+02	7.0E+00	0.0E+00	0.0E+00	4.0E+00	1.8E+02
Xe-131m	1.222E+00	1.735E-07	1.3E+02	4.9E+02	2.8E+03	2.6E+01	0.0E+00	0.0E+00	1.2E+01	3.5E+03
Xe-133m	9.368E-02	1.387E-08	0.0E+00	0.0E+00	1.8E+02	2.0E+00	0.0E+00	0.0E+00	0.0E+00	1.8E+02
Xe-133	3.760E+00	5.396E-07	5.3E+01	2.0E+02	8.2E+03	8.0E+01	0.0E+00	0.0E+00	3.7E+01	8.6E+03
Xe-135m	1.634E-01	2.345E-08	0.0E+00	0.0E+00	9.0E+00	3.0E+00	0.0E+00	0.0E+00	2.0E+00	1.4E+01
Xe-135	1.080E+00	1.580E-07	0.0E+00	0.0E+00	1.2E+03	2.3E+01	0.0E+00	0.0E+00	1.1E+01	1.2E+03
Xe-137	4.273E-02	6.165E-09	0.0E+00	0.0E+00	0.0E+00	0.0E+00	0.0E+00	0.0E+00	0.0E+00	0.0E+00
Xe-138	1.508E-01	2.171E-08	0.0E+00	0.0E+00	8.0E+00	3.0E+00	0.0E+00	0.0E+00	1.0E+00	1.2E+01
Total Noble Gases										4.8E+04

Note:

0.0E+00 appearing in the table indicates release is less than 1.0 Ci/yr for Noble Gases, 0.0001 Ci/yr for I.

© 2007 UniStar Nuclear Services, LLC. All rights reserved.
COPYRIGHT PROTECTED

Table 3.5-8—Annual Gaseous Effluent Releases (English Units)

(Page 2 of 4)

	Airborne Particulate Release Rate – Ci/yr				
		Building Ventilation			
Nuclide	Waste Gas System (Ci/yr)	Reactor (Ci/yr)	Auxiliary (Ci/yr)	Fuel Handling (Ci/yr)	Total (Ci/yr)
Cr-51	1.4E-07	9.2E-05	3.2E-06	1.8E-06	9.7E-05
Mn-54	2.1E-08	5.3E-05	7.8E-07	3.0E-06	5.7E-05
Co-57	0.0E+00	8.2E-06	0.0E+00	0.0E+00	8.2E-06
Co-58	8.7E-08	2.5E-04	1.9E-05	2.1E-04	4.8E-04
Co-60	1.4E-07	2.6E-05	5.1E-06	8.2E-05	1.1E-04
Fe-59	1.8E-08	2.7E-05	5.0E-07	0.0E+00	2.8E-05
Sr-89	4.4E-07	1.3E-04	7.5E-06	2.1E-05	1.6E-04
Sr-90	1.7E-07	5.2E-05	2.9E-06	8.0E-06	6.3E-05
Zr-95	4.8E-08	0.0E+00	1.0E-05	3.6E-08	1.0E-05
Nb-95	3.7E-08	1.8E-05	3.0E-07	2.4E-05	4.2E-05
Ru-103	3.2E-08	1.6E-05	2.3E-07	3.8E-07	1.7E-05
Ru-106	2.7E-08	0.0E+00	6.0E-08	6.9E-07	7.8E-07
Sb-125	0.0E+00	0.0E+00	3.9E-08	5.7E-07	6.1E-07
Cs-134	3.3E-07	2.5E-05	5.4E-06	1.7E-05	4.8E-05
Cs-136	5.3E-08	3.2E-05	4.8E-07	0.0E+00	3.3E-05
Cs-137	7.7E-07	5.5E-05	7.2E-06	2.7E-05	9.0E-05
Ba-140	2.3E-07	0.0E+00	4.0E-06	0.0E+00	4.2E-06
Ce-141	2.2E-08	1.3E-05	2.6E-07	4.4E-09	1.3E-05

© 2007 UniStar Nuclear Services, LLC. All rights reserved.
COPYRIGHT PROTECTED

Table 3.5-8—Annual Gaseous Effluent Releases (English Units)

(Page 3 of 4)

Nuclide	Primary Coolant (Bq/gm)	Secondary Coolant (Bq/gm)	Building Ventilation				Blowdown Vent Offgas (Bq/yr)	Main Condenser Removal (Ci/yr)	Total (Bq/yr)
			Fuel Handling (Bq/yr)	Reactor (Bq/yr)	Auxiliary (Bq/yr)	Turbine (Bq/yr)			
I-131	7.659E+02	9.287E-03	1.0E+07	7.0E+07	2.4E+08	0.0E+00	0.0E+00	0.0E+00	3.3E+08
I-133	2.929E+03	3.304E-02	3.7E+07	2.1E+08	9.3E+08	0.0E+00	0.0E+00	0.0E+00	1.2E+09

Total H-3 Released via Gaseous Pathway = 6.7E+12 Bq/yr
C-14 Released via Gaseous Pathway = 2.7E+11 Bq/yr
Ar-41 Released via Gaseous Pathway = 1.3E+12 Bq /yr

Nuclide	Primary Coolant (Bq/gm)	Secondary Coolant (Bq/gm)	Gas Stripping		Building Ventilation			Blowdown Vent Offgas (Bq/yr)	Main Condenser Removal (Ci/yr)	Total (Bq/yr)
			Shutdown (Bq/yr)	Continuous (Bq/yr)	Reactor (Bq/yr)	Auxiliary (Bq/yr)	Turbine (Bq/yr)			
Kr-85m	7.478E+03	1.098E-03	0.0E+00	0.0E+00	5.2E+12	1.5E+11	0.0E+00	0.0E+00	7.4E+10	5.6E+12
Kr-85	2.529E+05	3.617E-02	1.4E+14	5.2E+14	5.9E+14	5.2E+12	0.0E+00	0.0E+00	2.5E+12	1.3E+15
Kr-87	6.986E+03	9.653E-04	0.0E+00	0.0E+00	1.7E+12	1.5E+11	0.0E+00	0.0E+00	7.4E+10	2.0E+12
Kr-88	1.306E+04	1.902E-03	0.0E+00	0.0E+00	6.3E+12	2.6E+11	0.0E+00	0.0E+00	1.5E+11	6.7E+12
Xe-131m	4.521E+04	6.420E-03	4.8E+12	1.8E+13	1.0E+14	9.6E+11	0.0E+00	0.0E+00	4.4E+11	1.3E+14
Xe-133m	3.466E+03	5.132E-04	0.0E+00	0.0E+00	6.7E+12	7.4E+10	0.0E+00	0.0E+00	0.0E+00	6.7E+12
Xe-133	1.391E+05	1.997E-02	2.0E+12	7.4E+12	3.0E+14	3.0E+12	0.0E+00	0.0E+00	1.4E+12	3.2E+14
Xe-135m	6.046E+03	8.677E-04	0.0E+00	0.0E+00	3.3E+11	1.1E+11	0.0E+00	0.0E+00	7.4E+10	5.2E+11
Xe-135	3.996E+04	5.846E-03	0.0E+00	0.0E+00	4.4E+13	8.5E+11	0.0E+00	0.0E+00	4.1E+11	4.4E+13
Xe-137	1.581E+03	2.281E-04	0.0E+00	0.0E+00	0.0E+00	0.0E+00	0.0E+00	0.0E+00	0.0E+00	0.0E+00
Xe-138	5.580E+03	8.033E-04	0.0E+00	0.0E+00	3.0E+11	1.1E+11	0.0E+00	0.0E+00	3.7E+10	4.4E+11

Total Noble Gases
1.8E+15
Note:
0.0E+00 appearing in the table indicates release is less than 3.7E+10 Bq/yr for Noble Gases, 2.7E+06 Bq/yr for I.

© 2007 UniStar Nuclear Services, LLC. All rights reserved.
COPYRIGHT PROTECTED

Table 3.5-8—Annual Gaseous Effluent Releases (English Units)

(Page 4 of 4)

	Airborne Particulate Release Rate – Bq/yr				
		Building Ventilation			
Nuclide	Waste Gas System (Bq/yr)	Reactor (Bq/yr)	Auxiliary (Bq/yr)	Handling (Bq/yr)	Total (Bq/yr)
Cr-51	5.2E+03	3.4E+06	1.2E+05	6.7E+04	3.6E+06
Mn-54	7.8E+02	2.0E+06	2.9E+04	1.1E+05	2.1E+06
Co-57	0.0E+00	3.0E+05	0.0E+00	0.0E+00	3.0E+05
Co-58	3.2E+03	9.3E+06	7.0E+05	7.8E+06	1.8E+07
Co-60	5.2E+03	9.6E+05	1.9E+05	3.0E+06	4.1E+06
Fe-59	6.7E+02	1.0E+06	1.9E+04	0.0E+00	1.0E+06
Sr-89	1.6E+04	4.8E+06	2.8E+05	7.8E+05	5.9E+06
Sr-90	6.3E+03	1.9E+06	1.1E+05	3.0E+05	2.3E+06
Zr-95	1.8E+03	0.0E+00	3.7E+05	1.3E+03	3.7E+05
Nb-95	1.4E+03	6.7E+05	1.1E+04	8.9E+05	1.6E+06
Ru-103	1.2E+03	5.9E+05	8.5E+03	1.4E+04	6.3E+05
Ru-106	1.0E+03	0.0E+00	2.2E+03	2.6E+04	2.9E+04
Sb-125	0.0E+00	0.0E+00	1.4E+03	2.1E+04	2.3E+04
Cs-134	1.2E+04	9.3E+05	2.0E+05	6.3E+05	1.8E+06
Cs-136	2.0E+03	1.2E+06	1.8E+04	0.0E+00	1.2E+06
Cs-137	2.8E+04	2.0E+06	2.7E+05	1.0E+06	3.3E+06
Ba-140	8.5E+03	0.0E+00	1.5E+05	0.0E+00	1.6E+05
Ce-141	8.1E+02	4.8E+05	9.6E+03	1.6E+02	4.8E+05

© 2007 UniStar Nuclear Services, LLC. All rights reserved.
COPYRIGHT PROTECTED

Table 3.5-9—Gaseous Waste Release Source Term Inputs

Gaseous Waste Inputs	Value
There is No Continuous Stripping of Full Letdown Flow	--
Flow Rate Through Gas Stripper	1.2763 gpm (4.832 lpm)
Holdup Time for Xenon	27.7 days
Holdup Time for Krypton	1.67 days
Fill Time of Decay Tanks for the Gas Stripper	0.0 days
Primary Coolant Leak to Auxiliary Building	160. lb_m/day (73. kg/day)
Gas Waste SystemParticulate Release Fraction	0.01
Fuel Handling BuildingIodine Release Fraction	0.1
Particulate Release Fraction	0.01
Auxiliary BuildingIodine Release Fraction	0.1
Particulate Release Fraction	0.01
Containment Volume	2.8M ft^3 (7.9M liters)
Frequency of Primary Coolant Degassing	2 times/yr
Primary to Secondary Leak Rate	75. lb_m/day (34. kg/day)
There is a Kidney Filter	--
Containment Atmosphere Cleanup Rate	4.1K cfm (11.6K lpm)
Purge Time of Containment	16. hours
Fraction of Iodine Bypassing Condensate Demineralizer	.67
Iodine Partition Factor (Gas/Liquid) in Steam Generator	0.01
Frequency of Containment High Volume Purges	2 times/yr
Containment -High Volume PurgeIodine Release Fraction	0.1
Particulate Release Fraction	0.01
Containment - Low Volume Purge Rate	2,970. cfm (8,410. lpm)
Containment - Low Volume PurgeIodine Release Fraction	0.1
Particulate Release Fraction	0.01
Steam Leak to Turbine Building	1,700. lbs/Hr (771. kg/hr)
Fraction Iodine Released from Blowdown Tank Vent	0.0
Percent of Iodine Removed from Air Ejector Release	0.0
There is No Onsite Laundry	--

© 2007 UniStar Nuclear Services, LLC. All rights reserved.
COPYRIGHT PROTECTED

Table 3.5-10—Annual Solid Waste Generation Volumes

Waste Type	Quantity (ft^3)	Curie Content		Shipping Volume (ft^3)		Average Curies per Package		Maximum Number of Containers
		Expected	Maximum	Expected	Maximum	Expected	Maximum	
Evaporator Concentrates	710	1.50E+02	9.12E+03	-	140	7.81E+00	4.75E+02	19.2 (a)
Spent Resins (other)	90	1.07E+03	5.23E+04	90	90	1.07E+03	5.23E+04	1.0 (b)
Spent Resins (Rad Waste Demineralizer System)	140	2.96E+01	1.80E+02	140	140	1.85E+01	1.13E+03	1.6 (b)
Wet Waste from Demineralizers	8	1.69E+00	1.03E+02	8	8	1.69E+01	1.03E+03	0.1 (b)
Waste Drum for Solids Collection from Centrifuge System of Liquid Waste Processing System	8	1.69E+00	1.03E+02	-	8	1.54E+00	9.36E+01	1.1 (a)
Filters	120	6.86E+02	6.86E+02	120	120	5.28E+02	5.28E+02	1.3 (b)
Sludge	70	1.48E+01	9.00E+02	-	35	3.70E+01	2.25E+03	0.4 (b)
Total Solid Waste Stored in Drums	1,146	1.95E+03	6.50E+04	358	541			
Mixed Waste	2	0.04	2.43	2	2	1.33E-01	8.10E+00	0.3 (a)
Non-Compressible Dry Active Waste (DAW)	70	2.97E-01	1.81E+01	70	70	2.97E+00		0.1 (c)
Compressible DAW	1,415	6.01E+00	3.66E+02	1,415	1,415	4.29E+00		1.4 (c)
Combustible DAW	5,300	3.19E+01	1.94E+03	5,300	5,300	6.02E+00		5.3 (c)
Total DAW	6,785	3.82E+01	2.32E+03	varies	varies	varies	varies	varies
Overall Totals	7,933	1.99E+03	6.73E+04	Varies	varies	varies	varies	varies

Notes:

(a) 55 gal drum

(b) 8-120 HIC

(c) SEALAND

© 2007 UniStar Nuclear Services, LLC. All rights reserved.
COPYRIGHT PROTECTED

Table 3.5-11—Liquid Waste Management System Tank Capacity

Description	Number of Tanks	Capacity per Tank gallons (liters)	Total Capacity Gallons (liters)
Liquid Waste Storage	2 (Group I waste) 2 (Group II waste) 1 (Group III waste)	18,500 (70,028) 18,500 (70,028) 18,500 (70,028)	37,000 (140,056) 37,000 (140,056) 18,500 (70,028)
Concentrate Tanks	3	9,000 (34,068)	27,000 (102,203)
Monitor Tanks	2	18,500 (70,028)	37,000 (140,056)

© 2007 UniStar Nuclear Services, LLC. All rights reserved.
COPYRIGHT PROTECTED

Table 3.5-12—Liquid Waste Management System Process Parameters

Parameter	Process Value
Design Process Capacity (Nominal) – Evaporator Section	~1,050 gal/hr (3,975 liters/hr)
Design Process Capacity (Nominal) – Centrifuge Section	~ 1,300 gal/hr (4,920 liters/hr)
Design Process Capacity (Nominal) – Demineralizer & Filtration Section	~2,400 gal/hr (9,085 liters/hr)
Maximum Group I Waste Influent Waste Stream	~26,500 gal/wk (100,310 liters/wk)
Maximum Group II Waste Influent Waste Stream	~66,100 gal/wk (250,208 liters/wk)
Maximum Group III Waste Influent Waste Stream	~17,200 gal/wk (65,107 liters/wk)

© 2007 UniStar Nuclear Services, LLC. All rights reserved.
COPYRIGHT PROTECTED

Table 3.5-13—Radioactivity Input to the Liquid Waste System

Source	Flow Rate	Activity
Shim Bleed	110 gpd (416 liters/day)	Primary Coolant Activity (PCA)
Equipment Drains	1,728 gpd (6,541 liters/day)	PCA
Clean Wastes	9,428 gpd (35,690 liters/day)	0.001 PCA
Dirty Wastes	0.0*	Not Applicable*
Steam Generator Blowdown	218,400 lbm/hr 852,300 gpd (3,226,306liters/day)	Steam Activity in the Secondary System (Table 3.5-3)
Primary to Secondary Leak Rate	75 lb_m/day (34 kg/day)	Activity in the Secondary System (Table 3.5-3)
Condensate Demineralizer Flow Fraction	0.33	Activity in the Secondary System (Table 3.5-3)

Note:
* Group III waste is not normally radioactive and is being neglected to maximize concentrations.

© 2007 UniStar Nuclear Services, LLC. All rights reserved.
COPYRIGHT PROTECTED

Table 3.5-14—Radioactivity Input to the Liquid Waste System

(Page 1 of 2)

1.	**Containment Purge:**	
	Purge Time of Containment	16 hours
	Frequency of Containment Building High Volume Purge	2 times/year
	Containment Volume	2.8 million ft^3 (79,287 m^3)
	Containment High Volume Purge:	
	Iodide Release Fraction	0.1
	Particulate Release Fraction	0.01
	Filters:	
	Charcoal	90%
	HEPA	99%
	Containment Low Volume Purge Rate	2,970 cfm (8,410 liters/min)
	Containment Low Volume Purge:	
	Iodide Release Fraction	0.1
	Particulate Release Fraction	0.01
	Filters:	
	Charcoal	90%
	HEPA	99%
	Containment Atmospheric Cleanup:	
	Flow Rate	4,100 cfm (11,609 liters/min)
	Filters:	
	Charcoal	90%
	HEPA	99%
2.	**Auxiliary Building:**	
	Primary Coolant Leakage to Auxiliary Building	160 lb_m/day (73 kg/day)
	Iodide Release Fraction	0.1
	Particulate Release Fraction	0.01
	Filters:	
	Charcoal	90%
	HEPA	99%
3.	**Fuel Handling Building**	
	Iodide Release Fraction	0.1
	Particulate Release Fraction	0.01
	Filters:	
	Charcoal	90%
	HEPA	99%
4.	**Turbine Building:**	
	Steam Leakage to Turbine Building	1,700 lb_m/hr (771 kg/hr)
	Primary to Secondary Leak Rate	75 lb_m/hr (34 kg/hr)
	Iodine Partition Factor (Gas/Liquid) in Steam Generator	0.01
	Fraction of Iodine Released from Blowdown Tank Vent	0.0
	Percent of Iodine Removed from Air Ejector Release	0.0
	Fraction of Iodine Bypassing condensate Demineralizer	0.67

© 2007 UniStar Nuclear Services, LLC. All rights reserved.
COPYRIGHT PROTECTED

Table 3.5-14—Radioactivity Input to the Liquid Waste System
(Page 2 of 2)

5.	**Waste Gas System:**	
	Flow Rate through Gas Stripper	1.276 gpm (4.832 l/min)
	Holdup Time for Xenon	27.7 days
	Holdup Time for Krypton	1.67 days
	Gas Waste System: Particulate Release Fraction	0.01
	Frequency of Primary Coolant Degassing	2 times/year
6.	**Laundry:**	
	There is no onsite laundry.	

© 2007 UniStar Nuclear Services, LLC. All rights reserved.
COPYRIGHT PROTECTED

Table 3.5-15—Radioactive Liquid Releases Due to Anticipated Operational Occurrences

(Page 1 of 2)

Nuclide	Adjusted Total (Ci/yr)	(Bq/yr)
Corrosion and Activation Products		
Na-24	0.00613	2.27E+08
Cr-51	0.00103	3.81E+07
Mn-54	0.00054	2.00E+07
Fe-55	0.00041	1.52E+07
Fe-59	0.00010	3.70E+06
Co-58	0.00155	5.74E+07
Co-60	0.00018	6.66E+06
Zn-65	0.00017	6.29E+06
W-187	0.00046	1.70E+07
Np-239	0.00058	2.15E+07
Fission Products		
Sr-89	0.00005	1.85E+06
Sr-91	0.00008	2.96E+06
Y-91M	0.00005	1.85E+06
Y-93	0.00036	1.33E+07
Zr-95	0.00013	4.81E+06
Nb-95	0.00010	3.70E+06
Mo-99	0.00175	6.48E+07
Tc-99M	0.00170	6.29E+07
Ru-103	0.00251	9.29E+07
Rh-103M	0.00251	9.29E+07
Ru-106	0.03050	1.13E+09
Rh-106	0.03050	1.13E+09
Ag-110M	0.00044	1.63E+07
Ag-110	0.00006	2.22E+06
Te-129M	0.00006	2.22E+06
Te-129	0.00004	1.48E+06
Te-131M	0.00031	1.15E+07
Te-131	0.00006	2.22E+06
I131	0.03424	1.27E+09
TE132	0.00048	1.78E+07
I132	0.00115	4.26E+07
I133	0.03488	1.29E+09
CS134	0.00265	9.81E+07
I135	0.01496	5.54E+08
CS136	0.00031	1.15E+07
CS137	0.00351	1.30E+08
BA137M	0.00328	1.21E+08
BA140	0.00421	1.56E+08
LA140	0.00763	2.82E+08
CE141	0.00005	1.85E+06
CE143	0.00061	2.26E+07
PR143	0.00005	1.85E+06
CE144	0.00132	4.88E+07

© 2007 UniStar Nuclear Services, LLC. All rights reserved.
COPYRIGHT PROTECTED

Table 3.5-15—Radioactive Liquid Releases Due to Anticipated Operational Occurrences
(Page 2 of 2)

Nuclide	Adjusted Total (Ci/yr)	(Bq/yr)
PR144	0.00132	4.88E+07
All Others	0.00002	7.40E+05
Total	0.19304	7.14E+09

© 2007 UniStar Nuclear Services, LLC. All rights reserved.
COPYRIGHT PROTECTED

Table 3.5-16—Summary of Radioactive Liquid Releases Including Anticipated Operational Occurrences

Nuclide	Total		Discharge Concentration		10CFR20 Appendix B Limits		Discharge Fraction of Limit
	(Ci/yr)	(Bq/yr)	(μCi/ml)	(Bq/ml)	(μCi/ml)	(Bq/ml)	
Corrosion and Activation Products							
Na-24	6.1E-03	2.3E+08	1.7E-10	6.4E-06	5.0E-05	1.9E+00	3.5E-06
Cr-51	1.0E-03	3.7E+07	2.8E-11	1.1E-06	5.0E-04	1.9E+01	5.7E-08
Mn-54	5.4E-04	2.0E+07	1.5E-11	5.7E-07	3.0E-05	1.1E+00	5.1E-07
Fe-55	4.1E-04	1.5E+07	1.2E-11	4.3E-07	1.0E-04	3.7E+00	1.2E-07
Fe-59	1.0E-04	3.7E+06	2.8E-12	1.1E-07	1.0E-05	3.7E-01	2.8E-07
Co-58	1.5E-03	5.6E+07	4.3E-11	1.6E-06	2.0E-05	7.4E-01	2.1E-06
Co-60	1.8E-04	6.7E+06	5.1E-12	1.9E-07	3.0E-06	1.1E-01	1.7E-06
Zn-65	1.7E-04	6.3E+06	4.8E-12	1.8E-07	5.0E-06	1.9E-01	9.7E-07
W-187	4.6E-04	1.7E+07	1.3E-11	4.8E-07	3.0E-05	1.1E+00	4.4E-07
Np-239	5.8E-04	2.1E+07	1.7E-11	6.1E-07	2.0E-05	7.4E-01	8.3E-06
Fission Products							
Sr-89	5.0E-05	1.9E+06	1.4E-12	5.3E-08	8.0E-06	3.0E-01	1.8E-07
Sr-91	8.0E-05	3.0E+06	2.3E-12	8.4E-08	2.0E-05	7.4E-01	1.41E-07
Y-93	3.6E-04	1.3E+07	1.30E-11	3.8E-07	2.0E-05	7.4E-01	5.1E-07
Zr-95	1.3E-04	4.8E+06	3.7E-12	1.4E-07	2.0E-05	7.4E-01	1.9E-07
Nb-95	1.0E-04	3.7E+06	2.8E-12	11E-07	3.0E-05	1.1E+00	9.5E-07
Mo-99	1.8E-03	6.7E+07	5.1E-11	1.9E-06	2.0E-05	7.4E-01	2.6E-06
Tc-99M	1.7E-03	6.3E+07	4.8E-11	1.8E-06	1.0E-03	3.7E+01	4.8E-08
Ru-103	2.5E-03	9.3E+07	7.1E-11	2.6E-06	3.0E-05	1.1E+00	2.4E-06
Rh-103M	2.5E-03	9.3E+07	7.1E-11	2.6E-06	6.0E-03	2.2E+02	1.2E-08
Ru-106	3.1E-02	1.1E+09	8.8E-10	3.3E-05	3.0E-06	1.1E-01	2.9E-04
Ag-110M	4.4E-04	1.6E+07	13E-11	4.6E-07	6.0E-06	2.2E-01	2.1E-06
Te-129M	6.0E-05	2.2E+06	1.7E-12	6.3E-08	7.0E-06	2.6E-01	2.4E-07
Te-129	4.0E-05	1.5E+06	1.41E-12	4.2E-08	4.0E-04	1.5E+01	2.8E-09
Te-131M	3.1E-04	1.1E+07	8.8E-12	3.3E-07	8.0E-06	3.0E-01	1.41E-06
Te-131	6.0E-05	2.2E+06	1.7E-12	6.3E-08	8.0E-05	3.0E+00	2.1E-08
I-131	3.4E-02	1.3E+09	9.7E-09	3.6E-05	1.0E-06	3.7E-02	9.7E-03
Te-132	4.8E-04	1.8E+07	1.7E-11	5.1E-07	9.0E-06	3.3E-01	1.5E-06
I-132	1.2E-03	4.4E+07	3.4E-11	1.3E-06	1.0E-04	3.7E+00	3.4E-07
I-133	3.5E-02	1.3E+09	1.0E-09	3.7E-05	7.0E-06	2.6E-01	1.4E-04
Cs-134	2.6E-03	9.6E+07	7.4E-11	2.7E-06	9.0E-07	3.3E-02	8.2E-05
I-135	1.5E-02	5.6E+08	4.3E-10	1.6E-05	3.0E-05	1.1E+00	1.4E-05
Cs-136	3.1E-04	1.1E+07	8.8E-12	3.3E-07	6.0E-06	2.2E-01	1.5E-06
Cs-137	3.5E-03	1.3E+08	1.0E-10	3.7E-06	1.0E-06	3.7E-02	1.0E-04
Ba-140	4.2E-03	1.6E+08	1.2E-10	4.4E-06	8.0E-06	3.0E-01	1.5E-05
La-140	7.6E-03	2.8E+08	2.2E-10	8.0E-06	9.0E-06	3.3E-01	2.4E-05
Ce-141	5.0E-05	1.9E+06	1.4E-12	5.3E-08	3.0E-05	1.1E+00	4.7E-08
Ce-143	6.1E-04	2.3E+07	1.7E-11	6.4E-07	2.0E-05	7.4E-01	8.7E-07
Pr-143	5.0E-05	1.9E+06	1.4E-12	5.3E-08	2.0E-05	7.4E-01	7.1E-08
Ce-144	1.3E-03	4.8E+07	3.7E-11	1.4E-06	3.0E-06	1.1E-01	1.2E-05
Pr-144	1.3E-03	4.8E+07	3.7E-11	1.4E-06	6.0E-04	2.2E+01	6.2E-08
H-3	1.7E+03	6.1E+13	4.7E-05	1.7E-00	1.0E-03	3.7E+01	4.7E-02

© 2007 UniStar Nuclear Services, LLC. All rights reserved.
COPYRIGHT PROTECTED

Table 3.5-17—Obtainable Dose Benefits for Liquid Waste System Augment

Cases	Population Total Body Dose – Person-Rem (Person-Sievert)[1]	Population Thyroid Dose Person-Rem (Person-Sievert)[1]
Base Case Evaporator/Centrifuge only, no Waste Demineralizer	0.177 (0.00177)	0.682 (0.00682)
Additional Waste Demineralizer	0.121 (0.00121)	0.222 (0.00222)
Obtainable dose benefit	0.06 (0.0006)	0.46 (0.0046)

Note:
[1]Population dose estimates described in Section 5.4.

© 2007 UniStar Nuclear Services, LLC. All rights reserved.
COPYRIGHT PROTECTED

Table 3.5-18—Liquid Waste System Augment Total-Body Dose Cost-Benefit Analysis

Parameter	Value
Annual Total-body collective dose benefit to the population within 50 miles of the CCNPP site.	0.06 person-rem (0.0006 person-sievert)
Nominal total collective dose over 60 years of operation (0.06 person-rem x 60 yr = 3.6 person-rem)	3.6 person-rem (0.036 person-sievert)
Value for estimating impact based on NUREG-1530	$2,000 per person-rem ($200,000 per person-sievert)
Obtainable benefit from addition of radwaste processing and control option (3.6 person-rem x $2,000/person-rem = $7,200)	$7,200
Cost Options for radwaste processing and control technology upgrade from Regulatory Guide 1.110	400 gpm demineralizer for clean waste processing [(1)]
Direct cost for option using methodology in Regulatory Guide 1.110, Table A-1 based on 1975 Dollars	$146,000
Total O&M Annual Cost (From Regulatory Guide 1.110, Table A-2 based on 1975 Dollars)	$5,000
Total cost over 60 years of operation (direct cost + O&M×60 years)	$446,000
Benefit/Cost Ratio (Values greater than 1 should be included in plant system design) $7,200 / $446,000 = 0.016)	0.016

Note:
[(1)]The clean waste reflects the nomenclature in GALE and the sizing is based on the EPR GALE input Table 3.5-4.

© 2007 UniStar Nuclear Services, LLC. All rights reserved.
COPYRIGHT PROTECTED

Table 3.5-19—Liquid Waste System Augment Thyroid Dose Cost-Benefit Analysis

Parameter	Value
Annual thyroid collective dose benefit to the population within 50 miles of the CCNPP site.	0.46 person-rem (0.0046 person-sievert)
Nominal total collective dose over 60 years of operation (0.46 person-rem x 60 yr = 27.6 person-rem)	27.6 person-rem (0.276 person-sievert)
Value for estimating impact based on NUREG-1530 (Note: 10 CFR Part 50, Appendix I has $1,000 per person-rem)	$2,000 per person-rem ($200,000 per person-sievert)
Obtainable benefit from addition of radwaste processing and control options	$55,200
Cost Options for radwaste processing and control technology upgrade from Regulatory Guide 1.110	400 gpm demineralizer for clean waste processing [(1)]
Direct cost for option using methodology in Regulatory Guide 1.110 based on 1975 Dollars	$146,000
Total O&M Annual Cost (From Regulatory Guide 1.110, Table A-2 based on 1975 Dollars)	$5,000
Total cost over 60 years of operation (Direct cost + O&M×60 years)	$446,000
Benefit/Cost Ratio (Values greater than 1 should be included in plant system design) $55,200 / $446,000 = 0.12)	0.12

Note:
[(1)] The clean waste reflects the nomenclature in GALE and the sizing is based on the EPR GALE input Table 3.5-4.

© 2007 UniStar Nuclear Services, LLC. All rights reserved.
COPYRIGHT PROTECTED

Table 3.5-20—Annual Radioactive Gaseous Releases Due to Anticipated Operational Occurrences

(Page 1 of 2)

	Condition 1		Condition 2		Condition 3		Condition 4	
	Total Off Normal for 0.5% Failed Fuel		Total Off Normal 500 gpd Primary-Secondary Tube Leak for 90 Days		Total Off Normal 1 gpm Reactor Coolant Leakage for 10 Days		Total Off Normal 200 gpd Reactor Coolant leakage to Aux. Building for 90 days	
Radionuclide	**(Ci/yr)**	**(Bq/yr)**	**(Ci/yr)**	**(Bq/yr)**	**(Ci/yr)**	**(Bq/yr)**	**(Ci/yr)**	**(Bq/yr)**
I-131	3.7E-02	1.4E+09	8.8E-03	3.2E+08	1.8E-02	6.5E+08	1.9E-02	7.0E+08
I-133	1.3E-01	4.9E+09	3.2E-02	1.2E+09	5.9E-02	2.2E+09	7.1E-02	2.6E+09
Kr-85M	6.1E+02	2.3E+13	1.6E+02	5.9E+12	8.0E+02	3.0E+13	1.5E+02	5.6E+12
Kr-85	1.4E+05	5.2E+15	3.4E+04	1.3E+15	1.1E+05	4.0E+15	3.4E+04	1.3E+15
Kr-87	2.2E+02	8.2E+12	6.7E+01	2.5E+12	2.7E+02	1.0E+13	5.9E+01	2.2E+12
Kr-88	7.5E+02	2.8E+13	2.1E+02	7.8E+12	9.8E+02	3.6E+13	1.9E+02	7.1E+12
Xe-131M	1.4E+04	5.3E+14	3.5E+03	1.3E+14	1.7E+04	6.2E+14	3.5E+03	1.3E+14
Xe-133M	7.6E+02	2.8E+13	1.8E+02	6.7E+12	1.0E+03	3.8E+13	1.9E+02	6.8E+12
Xe-133	3.6E+04	1.3E+15	8.8E+03	3.3E+14	4.7E+04	1.7E+15	8.7E+03	3.2E+14
Xe-135M	5.8E+01	2.2E+12	2.8E+01	1.0E+12	5.6E+01	2.1E+12	1.9E+01	6.9E+11
Xe-135	5.1E+03	1.9E+14	1.3E+03	4.9E+13	6.9E+03	2.5E+14	1.3E+03	4.7E+13
Xe-137	a	a	a	a	a	a	a	a
Xe-138	5.0E+01	1.9E+12	1.9E+01	7.1E+11	5.0E+01	1.8E+12	1.7E+01	6.2E+11
Cr-51	4.0E-04	1.5E+07	9.7E-05	3.6E+06	5.3E-04	2.0E+07	1.0E-04	3.8E+06
Mn-54	2.4E-04	8.8E+06	5.7E-05	2.1E+06	3.1E-04	1.1E+07	5.8E-05	2.1E+06
Co-57	3.4E-05	1.3E+06	8.2E-06	3.0E+05	4.7E-05	1.7E+06	8.2E-06	3.0E+05
Co-58	2.0E-03	7.4E+07	4.8E-04	1.8E+07	1.7E-03	6.1E+07	5.1E-04	1.9E+07
Co-60	4.7E-04	1.7E+07	1.1E-04	4.2E+06	2.4E-04	8.7E+06	1.2E-04	4.5E+06
Fe-59	1.1E-04	4.2E+06	2.8E-05	1.0E+06	1.5E-04	5.7E+06	2.8E-05	1.0E+06
Sr-89	6.6E-04	2.5E+07	1.6E-04	5.9E+06	7.7E-04	2.8E+07	1.7E-04	6.3E+06
Sr-90	2.6E-04	9.7E+06	6.3E-05	2.3E+06	3.1E-04	1.1E+07	6.8E-05	2.5E+06
Zr-95	4.2E-05	1.6E+06	1.0E-05	3.7E+05	1.0E-05	3.7E+05	2.6E-05	9.5E+05
Nb-95	1.8E-04	6.5E+06	4.2E-05	1.6E+06	1.3E-04	4.7E+06	4.3E-05	1.6E+06
Ru-103	6.9E-05	2.6E+06	1.7E-05	6.2E+05	9.2E-05	3.4E+06	1.7E-05	6.3E+05
Ru-106	3.2E-06	1.2E+05	7.8E-07	2.9E+04	7.8E-07	2.9E+04	8.7E-07	3.2E+04
Sb-125	2.5E-06	9.4E+04	6.1E-07	2.3E+04	6.1E-07	2.3E+04	6.7E-07	2.5E+04
Cs-134	2.0E-04	7.4E+06	4.8E-05	1.8E+06	1.7E-04	6.1E+06	5.6E-05	2.1E+06
Cs-136	1.4E-04	5.0E+06	3.3E-05	1.2E+06	1.8E-04	6.8E+06	3.3E-05	1.2E+06
Cs-137	3.7E-04	1.4E+07	9.0E-05	3.3E+06	3.5E-04	1.3E+07	1.0E-04	3.7E+06

© 2007 UniStar Nuclear Services, LLC. All rights reserved.
COPYRIGHT PROTECTED

Table 3.5-20—Annual Radioactive Gaseous Releases Due to Anticipated Operational Occurrences

(Page 2 of 2)

	Condition 1		Condition 2		Condition 3		Condition 4	
	Total Off Normal for 0.5% Failed Fuel		Total Off Normal 500 gpd Primary-Secondary Tube Leak for 90 Days		Total Off Normal 1 gpm Reactor Coolant Leakage for 10 Days		Total Off Normal 200 gpd Reactor Coolant leakage to Aux. Building for 90 days	
Radionuclide	**(Ci/yr)**	**(Bq/yr)**	**(Ci/yr)**	**(Bq/yr)**	**(Ci/yr)**	**(Bq/yr)**	**(Ci/yr)**	**(Bq/yr)**
Ba-140	1.8E-05	6.5E+05	4.2E-06	1.6E+05	4.2E-06	1.6E+05	1.0E-05	3.9E+05
Ce-141	5.5E-05	2.0E+06	1.3E-05	4.9E+05	7.4E-05	2.8E+06	1.4E-05	5.1E+05

Note: (a) Less than 1.0 Ci/yr for noble gases

© 2007 UniStar Nuclear Services, LLC. All rights reserved.
COPYRIGHT PROTECTED

Table 3.5-21—Obtainable Dose Benefits for Gaseous Waste System Augment

Cases	Population Total Body Dose[1]- Person-Rem (Person-Sievert)	Population Thyroid Dose[(1)] Person-Rem (Person-Sievert)
Baseline Configuration	5.52 (0.0552)	5.80 (0.058)
Extra Carbon Delay Bed	5.49 (0.0549)	5.77 (0.0577)
Obtainable dose benefit by augment	0.03 (0.0003)	0.03 (0.0003)

Note:
[(1)] Population dose estimates described in Section 5.4.

© 2007 UniStar Nuclear Services, LLC. All rights reserved.
COPYRIGHT PROTECTED

Table 3.5-22—Gaseous Waste System Augment Total-Body / Thyroid Dose Cost Benefit Analysis[1]

Parameter	Value
Annual whole-body / Thyroid collective dose benefit to the population within 50 miles of the CCNPP site.	0.03 person-rem (0.0003 person-sievert)
Nominal total collective dose over 60 years of operation (0.03 person-rem x 60 yr = 1.8 person-rem)	1.8 person-rem (0.018 person-sievert)
Value for estimating impact based on NUREG-1530	$2,000 per person-rem ($200,000 per person-sievert)
Obtainable benefit from addition of radwaste processing and control option (1.8 person-rem x $2000/person-rem =$3,600)	$3,600
Cost Options for radwaste processing and control technology upgrade from Regulatory Guide 1.110	3-ton charcoal absorber
Direct cost for option (using methodology in Regulatory Guide 1.110, Table A-1 based on 1975 Dollars)	$67,000
Total O&M Annual Cost (From Regulatory Guide 1.110, Table A-2 based on 1975 Dollars)	Negligible
Total cost over 60 years of operation (direct cost + O&M×60 years)	$67,000
Benefit/Cost Ratio (Values greater than 1 should be included in plant system design) $3,600 / $67,000 = 0.053)	0.053

Note:
Since the dose reduction benefit for both the total body and the thyroid give the same collective dose savings, the cost benefit results are directly applicable to both the total body and thyroid evaluations.

© 2007 UniStar Nuclear Services, LLC. All rights reserved.
COPYRIGHT PROTECTED

Table 3.5-23—Radiation Monitors

(Page 1 of 9)

Method	Monitoring Task	Radioisotopes	Range
	Noble Gas Effluent Monitors		
Beta-sensitive detector (β)	Primary coolant noble gas activity concentration downstream of the nuclear sampling system degasifier in the Nuclear Auxiliary Building.	Kr-85, Xe-133	3E-4 – 3E+2 μCi/cc 1E+1 – 1E+7 Bq/cc
Gamma-sensitive detector ()	Noble gas radioactivity in the exhaust air of cell 1 ventilation systems of the Nuclear Auxiliary Building	Kr-85, Xe-133	3E-7 – 1E-2 μCi/cc 1E-2 – 4E+2 Bq/cc
Gamma-sensitive detector (γ)	Noble gas radioactivity in the exhaust air of cell 2 ventilation systems of the Nuclear Auxiliary Building.	Kr-85, Xe-133	3E-7 – 1E-2 μCi/cc 1E-2 – 4E+2 Bq/cc
Gamma-sensitive detector (γ)	Noble gas radioactivity in the exhaust air of cell 3 ventilation systems of the Nuclear Auxiliary Building.	Kr-85, Xe-133	3E-7 – 1E-2 μCi/cc 1E-2 – 4E+2 Bq/cc
Gamma-sensitive detector (γ)	Noble gas radioactivity in the exhaust air of cell 4 ventilation systems of the Fuel Building.	Kr-85, Xe-133	3E-7 – 1E-2 μCi/cc 1E-2 – 4E+2 Bq/cc
Gamma-sensitive detector (γ)	Noble gas radioactivity in the exhaust air of cell 5 ventilation systems of the Fuel Building.	Kr-85, Xe-133	3E-7 – 1E-2 μCi/cc 1E-2 – 4E+2 Bq/cc
Gamma-sensitive detector (γ)	Noble gas radioactivity in the exhaust air of cell 6 ventilation systems of the Safeguard Building.	Kr-85, Xe-133	3E-7 – 1E-2 μCi/cc 1E-2 – 4E+2 Bq/cc
Beta-sensitive detector (β)	Noble gas radioactivity in the exhaust air of the containment ventilation system that exhausts to the stack.	Kr-85, Xe-133	3E-7 – 1E-2 μCi/cc 1E-2 – 4E+2 Bq/cc
Beta-sensitive detector (β)	Noble gas activity in the region of the refueling machine within the containment while moving fuel assemblies.	Kr-85, Xe-133	1E-6 – 1E-2 μCi/cc 1E-2 – 4E+2 Bq/cc
Beta-sensitive detector (β)	Noble gas activity in the region of the spent fuel mast bridge within the fuel building while moving fuel assemblies.	Kr-85, Xe-133	1E-6 – 1E-2 μCi/cc 1E-2 – 4E+2 Bq/cc
Beta-sensitive detector (β)	Two (2) noble gas activity monitors (redundant) in the vent stack associated with air flow monitors.	Kr-85, Xe-133	1E-6 – 1E+2 μCi/cc 3E+4 – 1E+9 μCi /hr
Calculated	Two (2) noble gas activity release rate calculation modules (redundant) using the measured values from a noble gas monitor and the air flow through the vent stack.	Kr-85, Xe-133	3E-6 – 1E-2 μCi/cc 3E+4 – 1E+9 μCi /hr
Gamma-sensitive multi-channel analyzer (γ)	Noble gas activity in the vent stack.	Xe-133	1 – 50000 cps
Calculated	Noble gas activity release rate is calculated using the measured values from noble gas activity rad. monitor and the air flow through the vent stack.	Kr-85, Xe-133	3E-6 – 1E-2 μCi/cc 1E-1 – 4E+2 Bq/cc, 3E+4 – 1E+9 μCi /hr 1E+9 – 4E+13 Bq/hr
Laboratory evaluation of samples.	Vent stack exhaust air sampler drawn on demand using a mobile high pressure compressor unit. The filtered air sample is filled into a gas bottle. The samples are analyzed in the radiochemical laboratory by gamma spectroscopic evaluation of the nuclide specific composition of the noble gases.	Kr-85, Xe-133	–

© 2007 UniStar Nuclear Services, LLC. All rights reserved.
COPYRIGHT PROTECTED

Table 3.5-23—Radiation Monitors

(Page 2 of 9)

Method	Monitoring Task	Radioisotopes	Range
Laboratory evaluation of samples.	Two (2) vent stack exhaust air samplers (redundant) for use during and after accidents using a small sample cylinder drawn on demand. The samples are analyzed in the radiochemical laboratory by gamma spectroscopic evaluation of the nuclide specific composition of the noble gases.	Kr-85, Xe-133	–
Gamma-sensitive detectors adjacent to the monitored air duct (γ)	Two (2) air duct monitors (redundant) of the annulus air extraction system downstream of the filters. The instrument is to function also during a sever accident.	Kr-85, Xe-133	3E-7— 1E-2μCi/cc 1E-2 – 4E+2 Bq/cc
Gamma-sensitive detectors adjacent to the monitored air duct (γ)	Two (2) air duct monitors (redundant) of the Safeguard Building controlled-area ventilation system downstream of the filters. The instrument is intended to function also during a severe accident.	Kr-85, Xe-133	3E-7 — 1E-2μCi/cc 1E-2 – 4E+2 Bq/cc
Gamma-sensitive detectors inside the stack (γ)	Two (2) gas activity monitors in the stack (redundant) that detect discharges during accidents. The instrument is intended to finction also during a severe accident.	Kr-85, Xe-133	3E-7 – 1E-2 μCi/cc 1E-2 – 4E+2 Bq/cc
Beta-sensitive detector (β)	Noble gas radioactivity in the exhaust air of the containment recirculation ventilation system.	Kr-85, Xe-133	3E-7 – 1E-2μCi/cc 1E-2 – 4E+2 Bq/cc
Iodine and Aerosol (Halogen and Particulate) Monitoring			
Laboratory evaluation of samples.	Filter cartiridge sampler for aerosol radioactivity in the air of the annulus air extraction system downstream of the filters. The filter cartridge is evaluated in the laboratory.	-	–
Laboratory evaluation of samples.	Filter cartridge sampler for gaseous iodine radioactivity in the air of the annulus air extraction system downstream of the filters. The filter cartridge is evaluated in the laboratory.	-	–
Laboratory evaluation of samples.	Filter cartridge sampler for aerosol radioactivity in the air of the Safeguard Building controlled-area ventilation system down-stream of filters. The filter cartridge is evaluated in the laboratory	–	–
Laboratory evaluation of samples.	Filter cartridge sampler for gaseous iodine radioactivity in the air of the Safeguard Building controlled-area ventilation system down-stream of filters. The filter cartridge is evaluated in the laboratory	-	–
Laboratory evaluation of samples.	Filter cartridge sampler for aerosol radioactivity in the exhaust air of the Access Building. The filter cartridge is evaluated in the laboratory.	I-131	–
Laboratory evaluation of samples.	Filter cartridge sampler for gaseous iodine radioactivity in the exhaust air of the Access Building. The filter cartridge is evaluated in the laboratory.	I-131	–
Laboratory evaluation of samples.	Filter cartridge sampler for aerosol radioactivity down-stream of filters of the laboratory exhaust air in the Nuclear Auxiliary Building. The filter cartridge is evaluated in the laboratory.	I-131	–

© 2007 UniStar Nuclear Services, LLC. All rights reserved.
COPYRIGHT PROTECTED

Table 3.5-23—Radiation Monitors

(Page 3 of 9)

Method	Monitoring Task	Radioisotopes	Range
Laboratory evaluation of samples.	Filter cartridge sampler for gaseous iodine radioactivity down-stream of filters of the laboratory exhaust air in the Nuclear Auxiliary Building. The filter cartridge is evaluated in the laboratory.	I-131	–
Laboratory evaluation of samples.	Filter cartridge sampler for aerosol radioactivity in the filtered system exhaust air of the Radioactive Waste Processing Building. The filter cartridge is evaluated in the laboratory.	–	–
Laboratory evaluation of samples.	Filter cartridge sampler for gaseous iodine radioactivity in the filtered system exhaust air of the Radioactive Waste Processing Building. The filter cartridge is evaluated in the laboratory.	-	–
Gamma-sensitive detector (γ)	Filter cartridge sampler for aerosol radioisotopes by continuous collection from a sample of the exhaust air on a particulate air filter and on a filter for gaseous iodine during and after accidents. Monitor the entire activity accumulated on the filters, the change of the entire activity accumulated on the filters with time and the change of the entire iodine 131 activity accumulated on the filters with time.	I-131	5E-10 – 3E-2 μCi 2E-5 – 1E+3 Bq (entire activity) 5E-10 – 5E-4 μCi /cc 2E-5 – 2E+1 Bq/cc (I-131) 3E-9 – 5E-3 μCi /cc 1E-4 – 2E+1 Bq/cc (Iodine, less I-131)
Gamma-sensitive detector (γ)	Filter cartridge sampler for radioactive gaseous iodine by continuous collection from a sample of the exhaust air on a particulate air filter and on a filter for gaseous iodine during and after accidents. Monitor the entire activity accumulated on the filters, the change of the entire activity accumulated on the filters with time and the change of the entire iodine 131 activity accumulated on the filters with time.	I-131	5E-10 – 3E-2 μCi 2E-5 – 1E+3 Bq, (entire activity) 5E-10 – 5E-4 μCi/cc 2E-5 – 2E-+1 Bq/cc (I-131) 3E-9 - 5E-3 μCi/cc 1E-4 - 2E+1 Bq/cc (Iodine less I-131)
Laboratory evaluation of samples	Two (2) filter cartridge samplers (redundant) for aerosol radioactivity in the vent stack exhaust air. Each cartridge is to contain a particle filter and a dual element for organic and elemental iodine	I-131	–
Laboratory evaluation of samples	Two (2) filter cartridge samplers (redundant) for gaseous iodine radioactivity in the vent stack exhaust air. Each cartridge is to contain a particle filter and a dual element for organic and elemental iodine.	I-131	–
Laboratory evaluation of samples	Two (2) filter cartridge samplers (redundant) for the vent stack exhaust air including vapor, carbon dioxide and the other carbon compounds continuously. Redundant samples are evaluated in the laboratory for H^3 and C^{14}	I-131	–
Laboratory evaluation of samples	Filter cartridge sampler for aerosol radioactivity in the exhaust air of the containment recirculation ventilation system. The filter cartridge is evaluated in the laboratory.	I-131	–
Laboratory evaluation of samples	Filter cartridge sampler for aerosol radioactivity in the exhaust air of the containment exhaust ventilation system. The filter cartridge which is evaluated in the laboratory.	I-131	–

© 2007 UniStar Nuclear Services, LLC. All rights reserved.
COPYRIGHT PROTECTED

Table 3.5-23—Radiation Monitors

(Page 4 of 9)

Method	Monitoring Task	Radioisotopes	Range
Laboratory evaluation of samples	Three (3) filter cartridge samplers (one for each cell) for aerosol radioactivity in the exhaust air of the ventilation systems of the Nuclear Auxiliary Building. The filter cartridge is evaluated in the laboratory.	I-131	–
Laboratory evaluation of samples	Filter cartridge sampler for aerosol radioactivity in the exhaust air of the hot workshop in the Nuclear Auxiliary Building. The filter cartridge is evaluated in the laboratory.	I-131	–
Laboratory evaluation of samples	Two (2) filter cartridge samplers (one for each cell) for aerosol radioactivity in the exhaust air of the ventilation systems of the Fuel Building. The filter cartridge is evaluated in the laboratory.	I-131	–
Laboratory evaluation of samples	Filter cartridge sampler for aerosol radioactivity in the exhaust air of the ventilation systems of the Safeguard Building. The filter cartridge is evaluated in the laboratory.	I-131	–
Laboratory evaluation of samples	Filter cartridge sampler for aerosol radioactivity in the exhaust air of the laboratory in the Nuclear Auxiliary Building. The filter cartridge is evaluated in the laboratory.	I-131	–
Laboratory evaluation of samples	Four (4) filter cartridge samplers for aerosol radioactivity in the exhaust air of the ventilation systems of the Radioactive Waste Processing Building. The filter cartridge is evaluated in the laboratory.	I-131	
	Process Monitors		
Gamma-sensitive detector (γ)	General area radiation level of the fuel pool floor. Assessing accessibility after abnormal events in the Fuel Building.	–	1E-4 – 1E+4 rem/hr 1E-6 – 1E+2 Sv/hr
Gamma-sensitive detector (γ)	All small items, tools etc. brought out of the controlled area are measured and released by an automatic release box (4 redundant monitors) in the Access Building.	Co-60, Cs-137	
Alpha- and beta-sensitive detectors and gamma-sensitive detectors (α,β,γ)	Five (5) exit portal monitors in the Access Building.	Co-60, Cs-137	
Alpha- and beta-sensitive detectors and gamma-sensitive detectors (α,β,γ)	Three (3) pre-exit portal monitors in the Access Building.	Co-60, Cs-137	

© 2007 UniStar Nuclear Services, LLC. All rights reserved.
COPYRIGHT PROTECTED

Table 3.5-23—Radiation Monitors
(Page 5 of 9)

Method	Monitoring Task	Radioisotopes	Range
Gamma-sensitive electronic personnel dosimeter (γ)	At the entrance and exit of the controlled area the personnel dosimeters are read by dosimeter readers (total of 4). The measured dose values together with personal identification codes are evaluated by the dosimetry system of the plant in the Access Buiiding.	–	60 keV – 6 MeV Energy range 1E-4 – 1E+3 rem 1E-6 – 1E+1 Sv Dose range
Gamma-sensitive detector (γ)	Radioactive Waste Processing Building decontamination room radiation monitor.		1E-4 – 1E+1 rem/hr 1E-6 – 1E-1 Sv/hr
Integral gamma-measurement with a gamma-sensitive detector (threshold 100 keV) (γ)	Component cooling loop radiation monitor (4 - one on each component cooling loop) in the Reactor Building.		1E-6 – 1E-3 μCi/ml 4E-2 – 4E+1 Bq/ml
Measurement with gamma-sensitive detectors (γ)	High-pressure coolers of the volume control system radiation monitor (4 - one on each component cooling loop). The detectors are installed at the component cooling water inlet and outlet of each HP cooler in the Reactor Building. The purpose is to detect a leak from the primary side to the component cooling water side.	–	3E-5 – 3E+0 μCi/ml 1E+0 – 1E+5 Bq/ml
Measuring arrangement of gamma detectors (γ)	Dose rate level at the top of the drum (in 10 cm distance) while the drum is rotated slowly in the Radioactive Waste Processing Building.		1E-4 – 1 rem/hr 1E-6 – 1E-2 Sv/hr
Measuring arrangement of gamma detectors (γ)	Dose rate level at the bottom of the drum (in 10 cm distance) while the drum is rotated slowly in the Radioactive Waste Processing Building.		1E-4 – 1 rem/hr 1E-6 – 1E-2 Sv/hr
Measuring arrangement of gamma detectors (γ)	Dose rate level at the shell of the drum (upper area, in 10 cm distance) while the drum is rotated slowly in the Radioactive Waste Processing Building.		1E-4 – 1 rem/hr 1E-6 – 1E-2 Sv/hr
Measuring arrangement of gamma detectors (γ)	Dose rate level at the shell of the drum (middle area, in 10 cm distance) while the drum is rotated slowly in the Radioactive Waste Processing Building.		1E-4 – 1 rem/hr 1E-6 – 1E-2 Sv/hr
Measuring arrangement of gamma detectors (γ)	Dose rate level at the shell of the drum (lower area, in 10 cm distance) while the drum is rotated slowly in the Radioactive Waste Processing Building.		1E-4 – 1 rem/hr 1E-6 – 1E-2 Sv/hr
Measuring arrangement of gamma detectors (γ)	Dose rate level in 1 m distance of the drum while the drum is rotated slowly in the Radioactive Waste Processing Building.		1E-4 – 1 rem/hr 1E-6 – 1E-2 Sv/hr

© 2007 UniStar Nuclear Services, LLC. All rights reserved.
COPYRIGHT PROTECTED

Table 3.5-23—Radiation Monitors

(Page 6 of 9)

Method	Monitoring Task	Radioisotopes	Range
Measuring arrangement of gamma detectors (γ)	Dose rate in the vicinity of the drum measuring equipment as back ground measurement (in absence of a waste drum) in the Radioactive Waste Processing Building.		1E-4 – 1 rem/hr 1E-6 – 1E-2 Sv/hr
Gamma spectrometer with multi channel analyzer (γ)	Gamma spectroscopy system for 200 liter drums in the Radioactive Waste Processing Building.		
Gamma-sensitive detector (γ)	Upstream activity entering the delay beds of the gaseous waste processing system in the Nuclear Auxiliary Building.	–	1E+0 – 1E+4 cps
Beta-sensitive detector (β)	Activity concentration in the pipe leading from the gas delay line to the vent stack.		1E-6 – 1E+2 μCi/cc 4E-2 – 4E+6 Bq/cc
Gamma sensitive detectors (γ)	N-16 radiation monitor on main steam to detect leakage in the steam generator. This is monitored by four redundant instruments on each main steam line (16 total). The detectors are mounted adjacent to the monitored main steam lines within the main steam and feedwater valve compartments.	N-16	1E-1 – 1E+4 cps
		N-16	1E-1 – 1E+4 cps
Gamma spectrometer with multi channel analyzer. (γ)	Gamma spectroscopy system for 200 liters drums in the Radioactive Waste Processing Building		
Integral measurement with gamma-sensitive detector (threshold 100 keV) and ring vessel (γ)	Blowdown water line of each individual steam generator (4 - one on each steam generator) in the Nuclear Auxiliary Building.		3E-6 – 1E-2 μCi/ml 1E-1 – 4E+2 Bq/ml
Gamma-sensitive detector (γ)	Containment high-range dose rate monitor (4 independent instruments) in the Reactor Building		1E-1 – 1E+7 rad/hr 1E-3 – 1E+5 Gy/hr
Beta-sensitive detector (β)	Turbine Building Main Condenser monitor		3E-6 – 1E-2 μCi/cc 1E-1 – 4E+2 Bq/cc

© 2007 UniStar Nuclear Services, LLC. All rights reserved.
COPYRIGHT PROTECTED

Table 3.5-23—Radiation Monitors

(Page 7 of 9)

Method	Monitoring Task	Radioisotopes	Range
Liquid Effluent Monitoring			
Gamma-sensitive detector (threshold 100 keV) (γ)	Liquid radwaste release line from the monitor tanks. Two(2) redundant instruments provide input to a control function in the Radioactive Waste Processing Building.		5E-6 – 1E-3 μCi/ml 2E-1 – 4E+1 Bq/ml
Integral measurement with gamma-sensitive detector (γ)	Liquid effluent from the Plant Drainage System before discharge.	–	3E-6 – 1E-2 μCi/ml 1E-1 – 4E+2 Bq/ml
Integral measurement with gamma-sensitive detector (γ)	Liquid effluent from the Plant Drainage System before discharge.	–	3E-6 – 1E-2 μCi/ml 1E-1 – 4E+2 Bq/ml
Airborne Monitoring			
Gamma-sensitive detector (threshold 350 kev). Alternatively uses a beta-sesitive detector (β,γ)	Aerosol in the exhaust air of containment ventilation.		5E-4 – 3E+0 μCi 2E+1 – 1E+5 Bq, 3E-10 – 1E-6 μCi/cc 1E-5 – 4E-2 Bq
Gamma-sensitive detector (γ)	Gaseous iodine in the exhaust air of containment ventilation.		5E-4 – 3E+0 μCi 2E+1 – 1E+5 Bq, 3E-10 – 5E-8 μCi/cc 1E-5 – 2E-2 Bq/cc
Beta-sensitive detector (β)	Tritium in the exhaust air of containment ventilation.	–	3E-9 – 3E-4 μCi/cc 1E-4 – 1E+1 Bq/cc
Gamma-sensitive detector (γ)	Air leaving the containment adjacent to monitored air duct by 2 redundant instruments. These redundant instruments provide input to a control function.	–	1E-5 – 1E+0 rad/hr 1E-7 – 1E-2 Gy/hr
Measurement with gamma-sensitive detectors adjacent to monitored air duct KLA2 (γ)	Air leaving the containment adjacent to a monitored air duct. This redundant instrument provides input to a control function.		1E-5 – 1E+0 rad/hr 1E-7 – 1E-2 Gy/hr
Gamma-sensitive detector (threshold 350 keV). Alternatively uses a beta-sensitive detector (β,γ)	Aerosol in the exhaust air of the cell 1 ventilation system in the Nuclear Auxiliary Building.		5E-4 – 3E+0 μCi 2E+1 – 1E+5 Bq, 3E-10 – 1E-6 μCi/cc 1E-5 – 4E-2 Bq/cc
Gamma-sensitive detector (γ)	Gaseous iodine in the exhaust air of thecell 1 ventilation system in the Nuclear Auxiliary Building	I-131	5E-4 – 3E+0 μCi 2E+1 – 1E+5 Bq, 3E-10 – 5E-8 μCi/cc 1E-5 – 2E-3 Bq/cc
Gamma-sensitive detector (threshold 350 keV). Alternatively uses abeta-sensitive detector (β,γ)	Aerosol in the exhaust air of the cell 2 ventilation system in the Nuclear Auxiliary Building.		5E-4 – 3E+0 μCi 2E+1 – 1E+5 Bq, 3E-10 – 1E-6 μCi/cc 1E-5 – 4E-2 Bq/cc

© 2007 UniStar Nuclear Services, LLC. All rights reserved.
COPYRIGHT PROTECTED

Table 3.5-23—Radiation Monitors
(Page 8 of 9)

Method	Monitoring Task	Radioisotopes	Range
Gamma-sensitive detector (γ)	Gaseous iodine in the exhaust air of thecell 2 ventilation system in the Nuclear Auxiliary Building.	I-131	5E-4 – 3E+0 μCi 2E+1 – 1E+5 Bq, 3E-10 – 5E-8 μCi/cc 1E-5 – 2E-3 Bq/cc
Gamma-sensitive detector (threshold 350 keV). Alternatively uses a beta-sensitive detector (β,γ)	Aerosol in the exhaust air of thecell 3 ventilation system in the Nuclear Auxiliary Building.		5E-4 – 3E+0 μCi 2E+1 – 1E+5 Bq, 3E-10 – 1E-6 μCi/cc 1E-5 – 4E-2 Bq/cc
Gamma-sensitive detector (γ)	Gaseous iodine in the exhaust air of the cell 3 ventilation system in the Nuclear Auxiliary Building.	I-131	5E-4 – 3E+0 μCi 2E+1 – 1E+5 Bq, 3E-10 – 5E-8 μCi/cc 1E-5 – 2E-3 Bq/cc
Gamma-sensitive detector (threshold 350 keV). Alternativelyuses a beta-sensitive detector (β,γ)	Aerosol in the exhaust air of thecell 4 ventilation system in the Fuel Building.		5E-4 – 3E+0 μCi 2E+1 – 1E+5 Bq, 3E-10 – 1E-6 μCi/cc 1E-5 – 4E-2 Bq/cc
Gamma-sensitive detector (γ)	Gaseous iodine in the exhaust air of the cell 4 ventilation system in the Fuel Building.	I-131	5E-4 – 3E+0 μCi 2E+1 – 1E+5 Bq, 3E-10 – 5E-8 μCi/cc 1E-5 – 2E-3 Bq/cc
Gamma-sensitive detector (threshold 350 keV). Alternatively uses a beta-sensitive detector (β,γ)	Aerosol in the exhaust air of the cell 5 ventilation system in the Fuel Building.	–	5E-4 – 3E+0 μCi 2E+1 – 1E+5 Bq, 3E-10 – 1E-6 μCi/cc 1E-5 – 4E-2 Bq/cc
Gamma-sensitive detector (γ)	Gaseous iodine in the exhaust air of the cell 5 ventilation system in the Fuel Building.	I-131	5E-4 – 3E+0 μCi 2E+1 – 1E+5 Bq, 3E-10 – 5E-8 μCi/cc 1E-5 – 2E-3 Bq/cc
Gamma-sensitive detector (threshold 350 keV). Alternatively uses a beta-sensitive detector (β,γ)	Aerosol in the exhaust air of the cell 6 ventilation system in the Safeguard Building.		5E-4 – 3E+0 μCi 2E+1 – 1E+5 Bq, 3E-10 – 1E-6 μCi/cc 1E-5 – 4E-2 Bq/cc
Gamma-sensitive detector (γ)	Gaseous iodine in the exhaust air of the cell 6 ventilation in the Safeguard Building.	I-131	5E-4 – 3E+0 μCi 2E+1 – 1E+5 Bq, 3E-10 – 5E-8 μCi/cc 1E-5 – 2E-3 Bq/cc
Gamma-sensitive detector (γ)	Air leaving the fuel handling area adjacent to the monitored air duct by 2 redundant instruments. These redundant instrument provides input to a control function.		1E-5 – 1E+0 rad/hr 1E-7 – 1E-2 Gy/hr Must be capable of detecting 10 DAC-hours
Gamma-sensitive detector (threshold 350 keV). Alternatively uses a beta-sensitive detector (β,γ)	Aerosol in the laboratory room exhaust air before the filters the Nuclear Auxiliary Building.		1E-5 – 1E+0 rad/hr 1E-7 – 1E-2 Gy/hr Must be capable of detecting 10 DAC-hours

© 2007 UniStar Nuclear Services, LLC. All rights reserved.
COPYRIGHT PROTECTED

Table 3.5-23—Radiation Monitors

(Page 9 of 9)

Method	Monitoring Task	Radioisotopes	Range
Gamma-sensitive detector (threshold 350 keV). Alternatively uses a beta-sensitive detector (β,γ)	Aerosol in the exhaust air of the hot workshop before the filters Nuclear Auxiliary Building.		5E-4 – 3E+0 μCi 2E+1 – 1E+5 Bq, 3E-10 – 1E-6 μCi/cc 1E-5 – 4E-2 Bq/cc Must be capable of detecting 10 DAC-hours
Gamma-sensitive detector (threshold 350 keV). Alternativelyuses a beta-sensitive detector (β,γ)	Aerosol in 2 separate locations of the exhaust air of theRadioactive Waste Processing Building.		5E-4 – 3E+0 μCi 2E+1 – 1E+5 Bq, 3E-10 – 1E-6 μCi/cc 1E-5 – 4E-2 Bq/cc
Gamma-sensitive detector (γ)	Gaseous iodine in 2 separate locations of the exhaust air of the Radioactive Waste Processing Building.		5E-4 – 3E+0 μCi 2E+1 – 1E+5 Bq, 3E-10 – 5E-8 μCi/cc 1E-5 – 2E-3 Bq/cc
Gamma-sensitive detector (threshold 350 keV). Alternatively uses a beta-sensitive detector (β,γ)	Aerosol in the exhaust air of the decontamilnation room in the Radioactive Waste Processing Building.		5E-4 – 3E+0 μCi 2E+1 – 1E+5 Bq, 3E-10 – 1E-6 μCi/cc 1E-5 – 4E-2 Bq/cc Must be capable of detecting 10 DAC-hours
Gamma-sensitive detector (γ)	Gaseous iodine in the exhaust air of Nuclear Auxiliary Building (cell 1, cell 2 and cell 3), Fuel Building (cell 4 and cell 5), from the Safeguard Building - (cell 6) and from the Radioactive Waste Building – (two cells).	I-131	5E-4 – 3E+0 μCi 2E+1 – 1E+5 Bq, 3E-10 – 5E-8 μCi/cc 1E-5 – 2E-3 Bq/cc
Gamma-sensitive detector (threshold 350 keV). Alternatively uses a beta-sensitive detector. (β,γ)	Aerosol in the exhaust air of the mechanical workshop in the Radioactive Waste Processing Building.		5E-4 – 3E+0 μCi 2E+1 – 1E+5 Bq, 3E-10 – 1E-6 μCi/cc 1E-5 – 4E-2 Bq/cc Must be capable of detecting 10 DAC-hours
Gamma-sensitive detector (γ)	Intake air of the main control room MCR inside each of the two MCR intake air ventilation ducts.	–	1E-5 – 1E+1 rad/hr 1E-7 – 1E+1 Gy/hr Must be capable of detecting 10 DAC-hours
Gamma-sensitive detector (threshold 350 keV). Alternatively usesa beta-sensitive detector. (β,γ)	Aerosol in the exhaust air of thecontainment ventilation.		5E-4 – 3E+0 μCi 2E+1 – 1E+5 Bq, 3E-10 – 1E-6 μCi/cc 1E-5 – 4E-2 Bq/cc Must be capable of detecting 10 DAC-hours
Gamma-sensitive detector (γ)	Gaseous iodine in the exhaust air of containment venthilation.		5E-4 – 3E+0 μCi 2E+1 – 1E+5 Bq, 3E-10 – 5E-8 μCi/cc 1E-5 – 2E-3Bq/cc

© 2007 UniStar Nuclear Services, LLC. All rights reserved.
COPYRIGHT PROTECTED

Figure 3.5-1—Radwaste Effluent Flow Paths

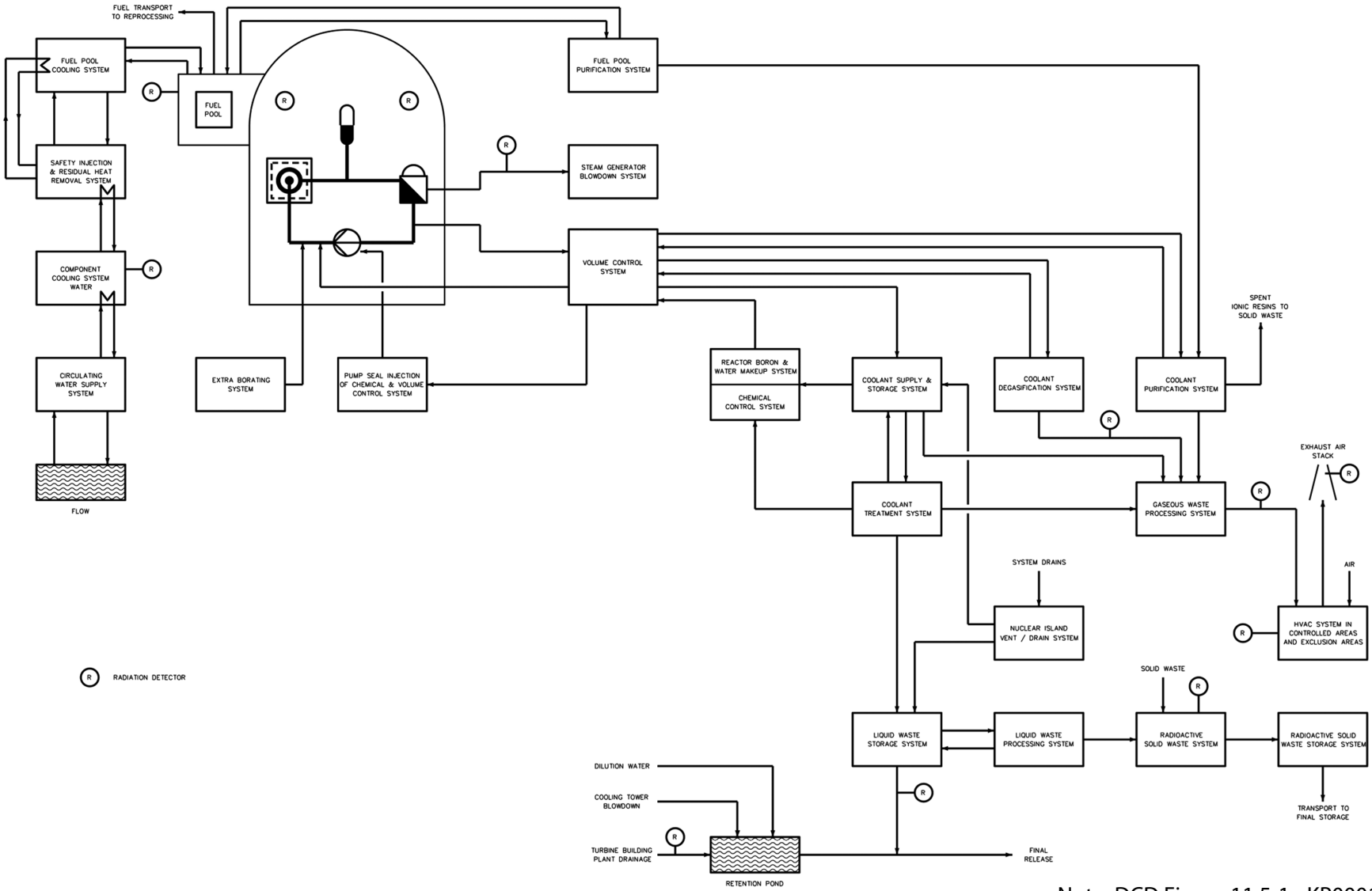

Note: DCD Figure 11.5-1 - KP0001T2

© 2007 UniStar Nuclear Services, LLC. All rights reserved.
COPYRIGHT PROTECTED

Figure 3.5-2—Liquid Radwaste Storage and Processing

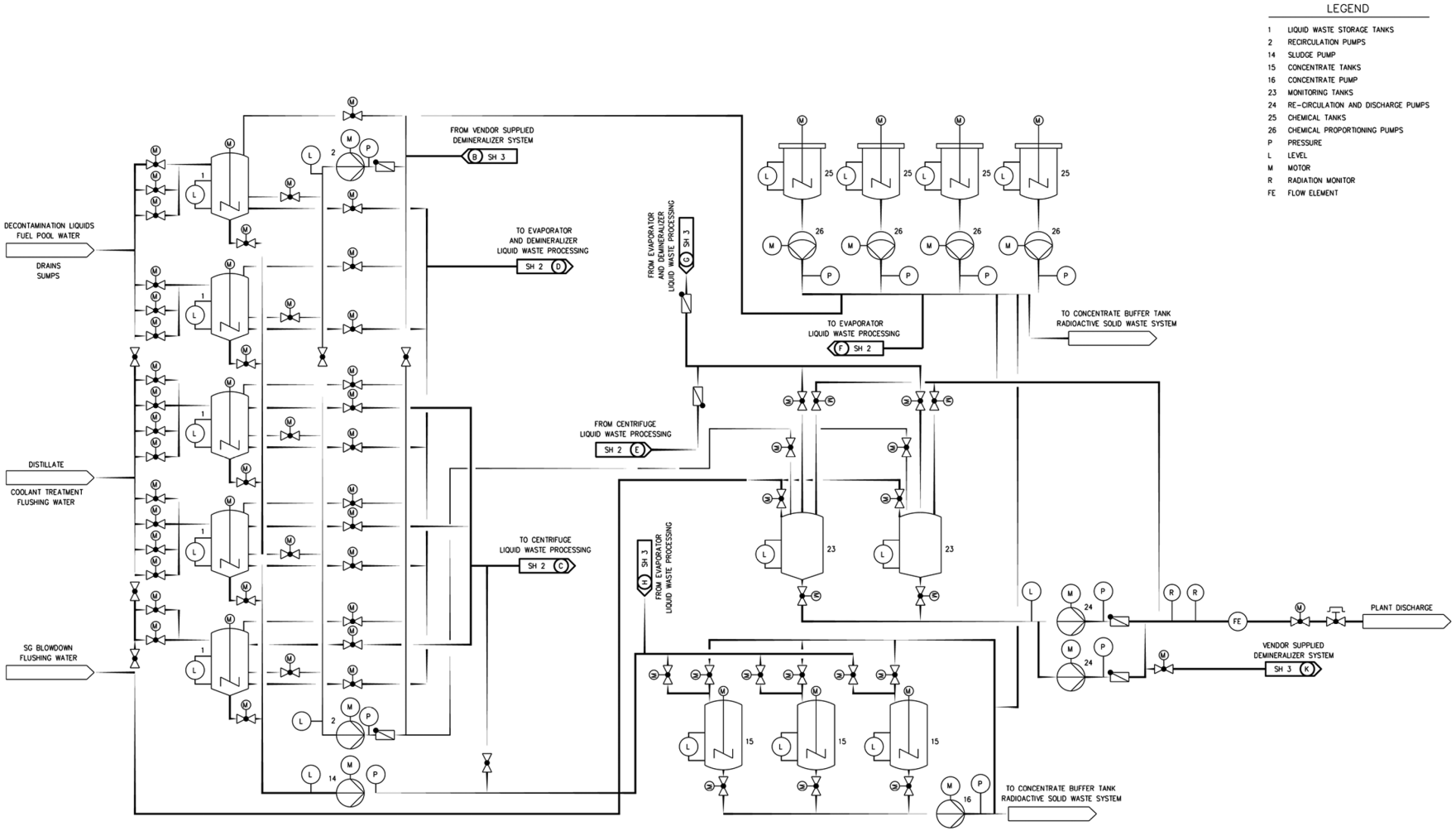

Note: DCD Figure 11.2-1 - KPF01T2

© 2007 UniStar Nuclear Services, LLC. All rights reserved.
COPYRIGHT PROTECTED

Figure 3.5-3—Liquid Waste Treatment Evaporator and Centrifuge

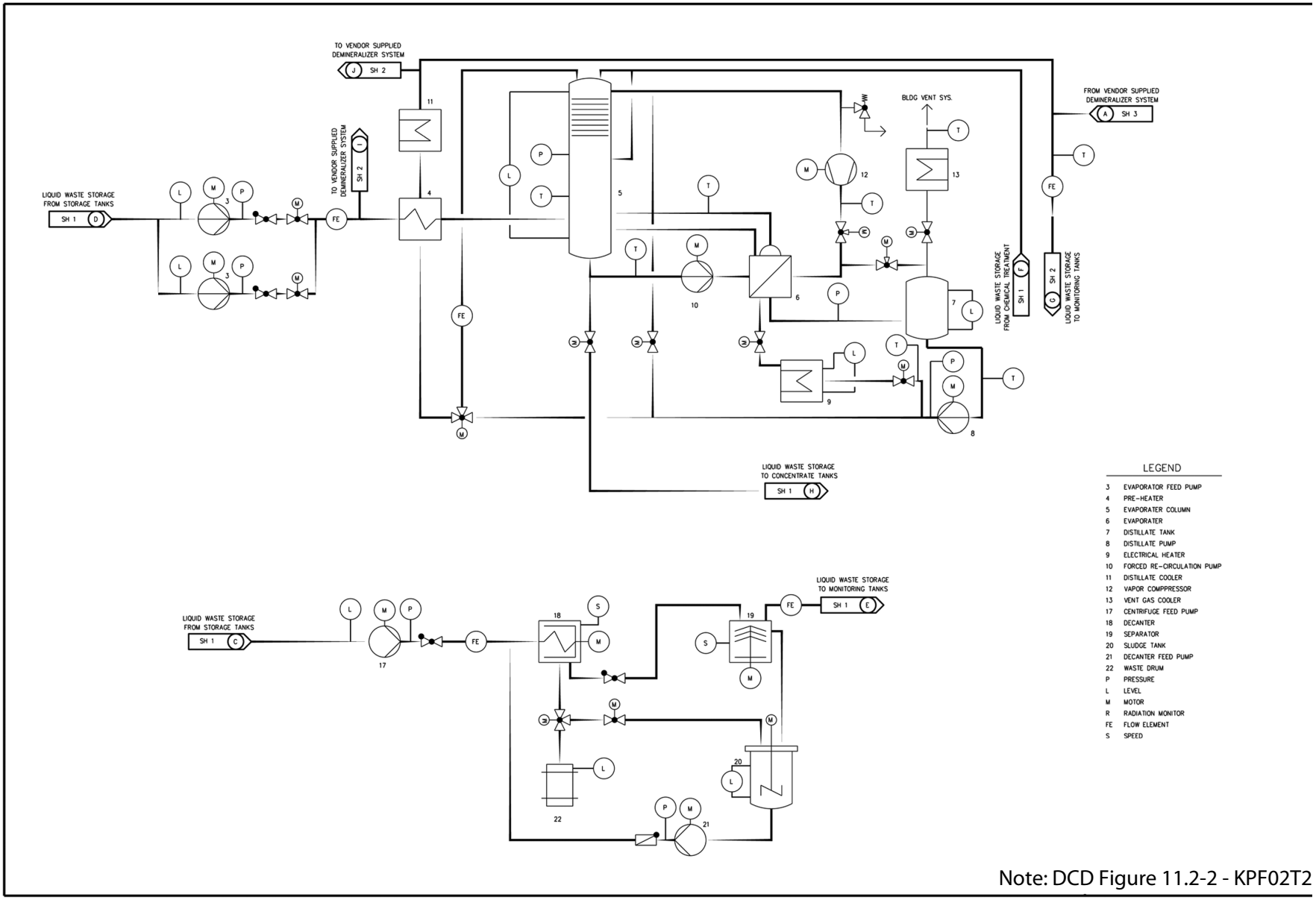

Note: DCD Figure 11.2-2 - KPF02T2

© 2007 UniStar Nuclear Services, LLC. All rights reserved.
COPYRIGHT PROTECTED

Figure 3.5-4—Liquid Waste Treatment Vendor Supplied Demineralizer System

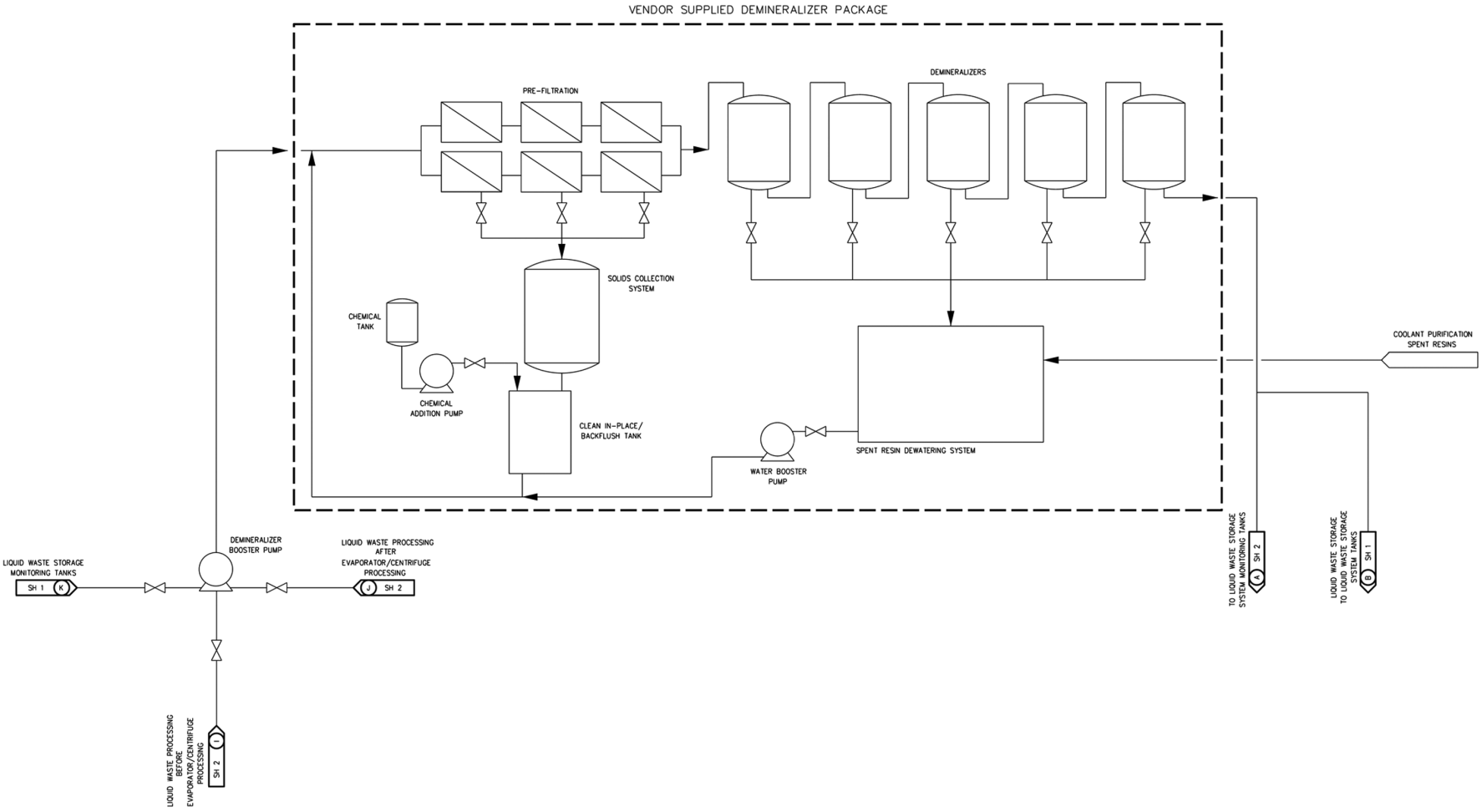

Note: DCD Figure 11.2-3 - KPF03T2

© 2007 UniStar Nuclear Services, LLC. All rights reserved.
COPYRIGHT PROTECTED

Figure 3.5-5—Gaseous Waste Processing and Sources

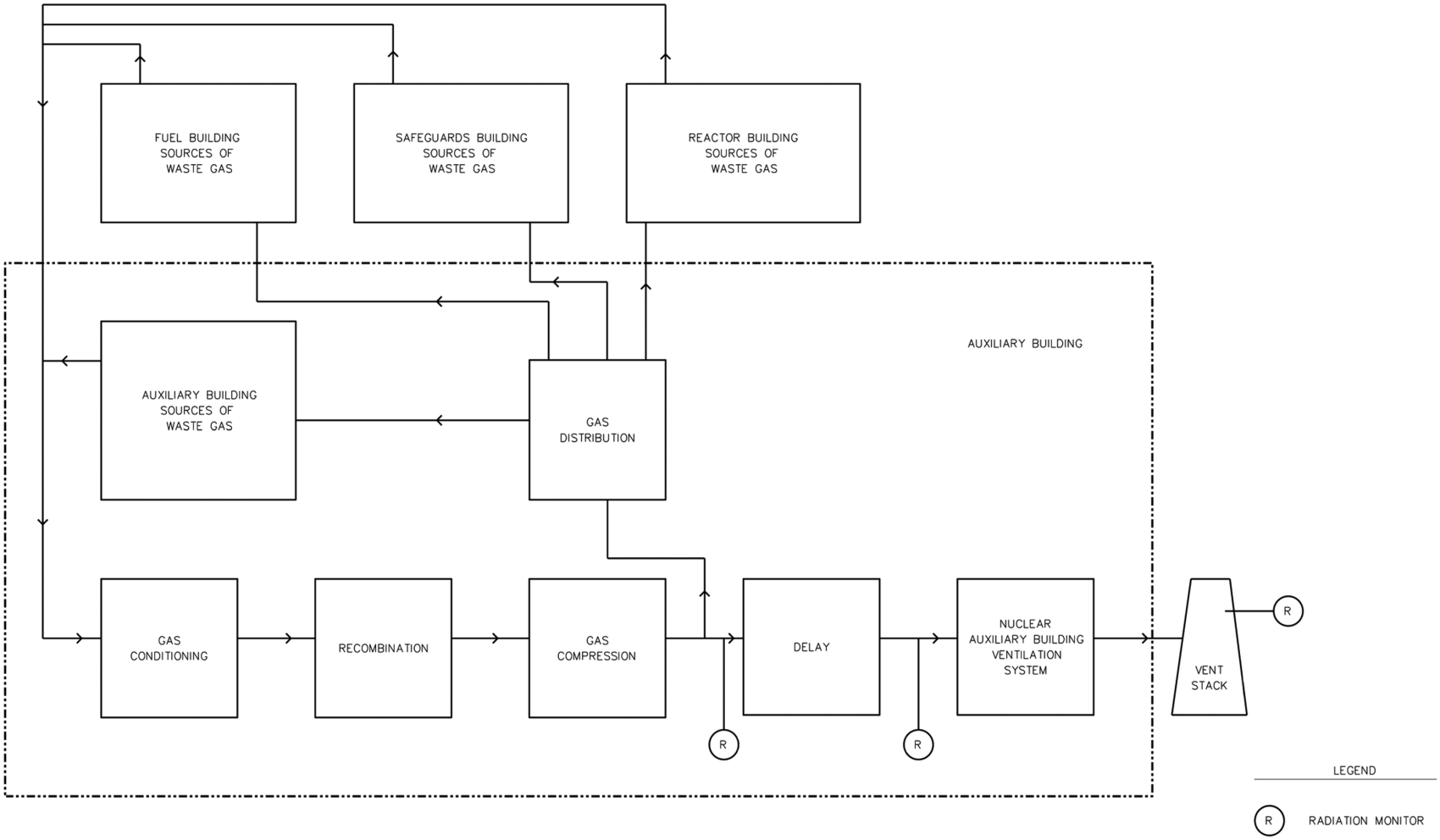

Note: DCD Figure 11.3-2 - KPL07T2

© 2007 UniStar Nuclear Services, LLC. All rights reserved.
COPYRIGHT PROTECTED

Figure 3.5-6—Gas Waste Treatment

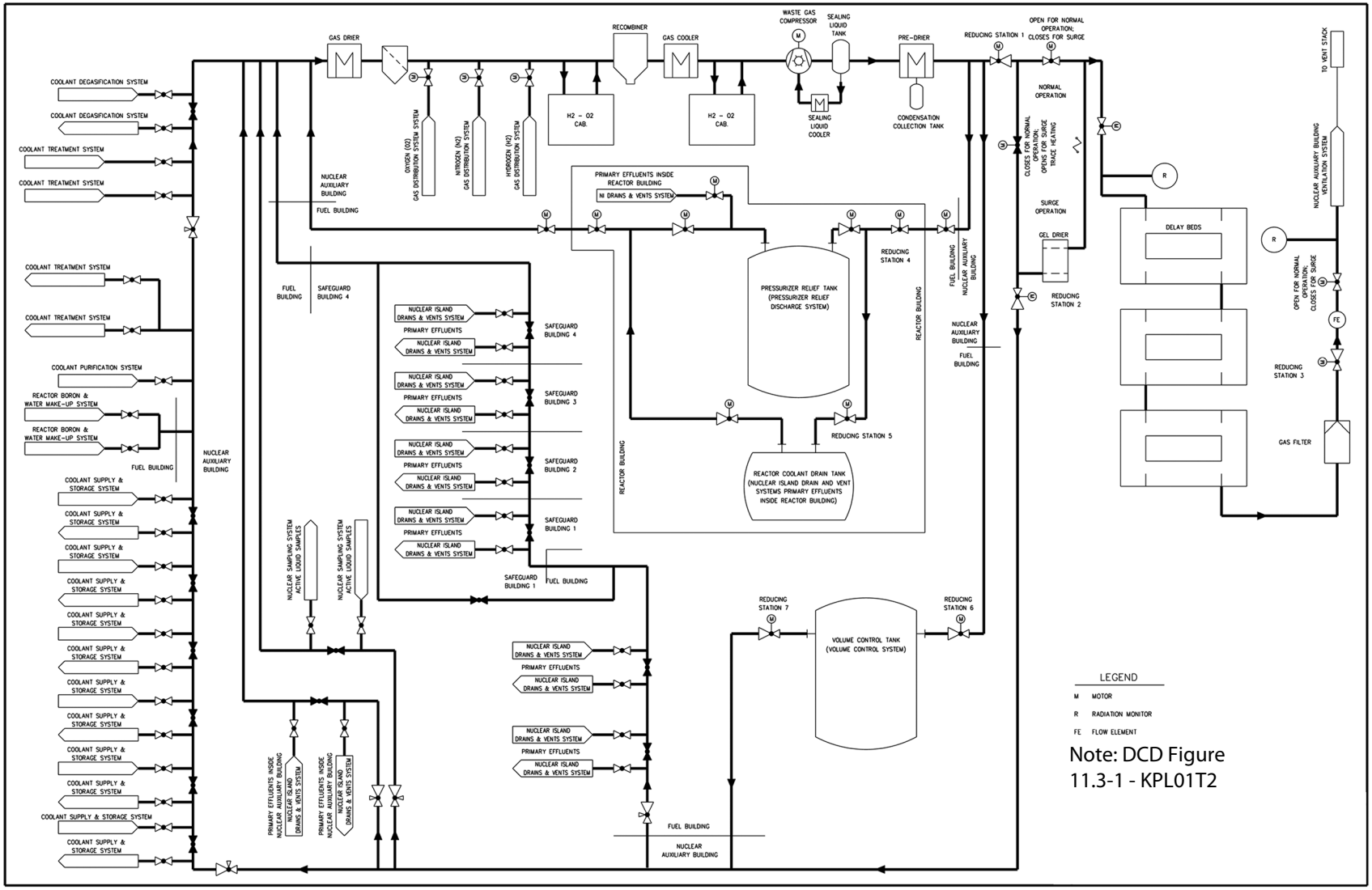

© 2007 UniStar Nuclear Services, LLC. All rights reserved.
COPYRIGHT PROTECTED

Figure 3.5-7—Controlled Area Ventilation Flow Diagram
(Page 1 of 6)

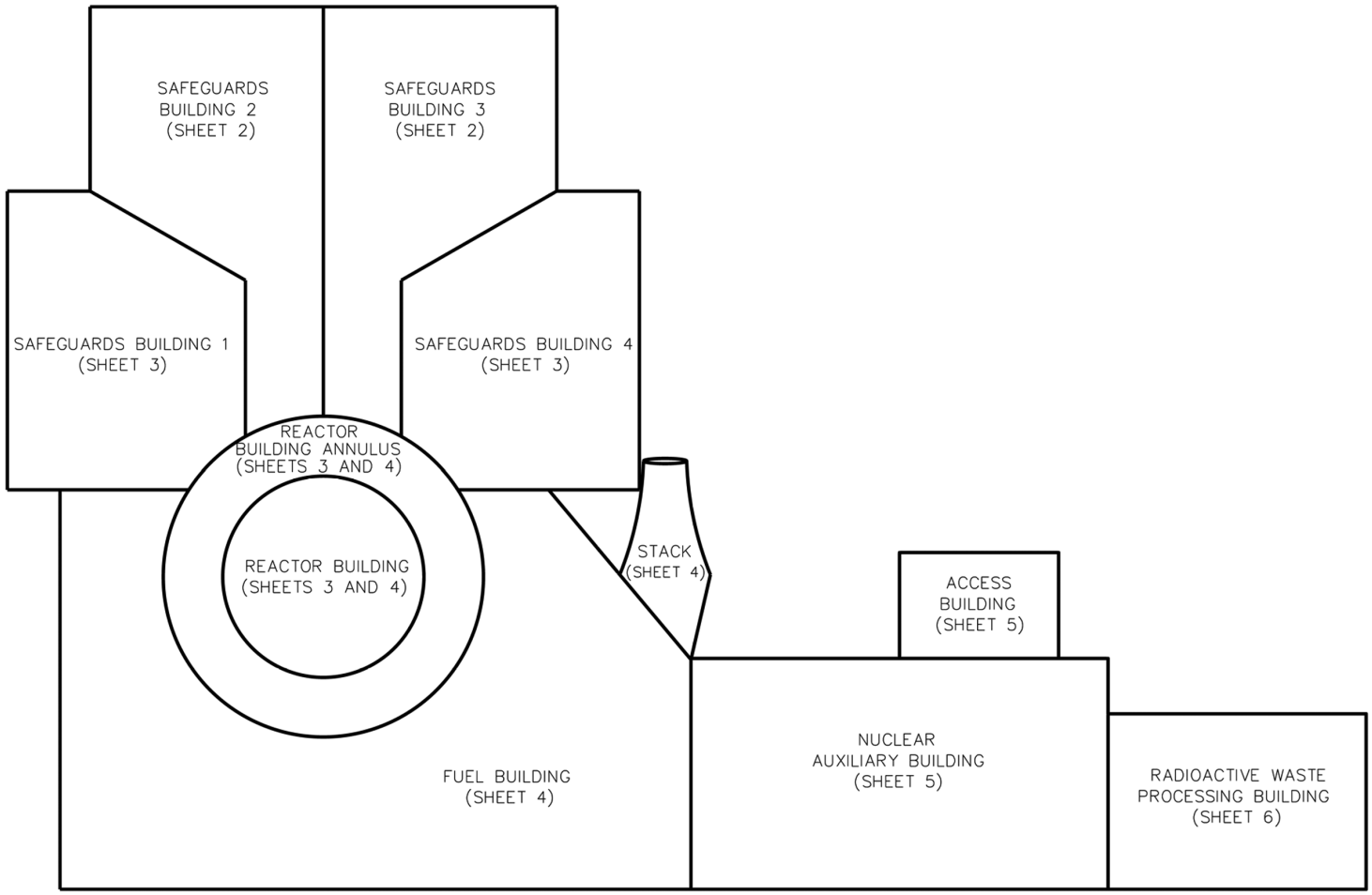

Note: IR 5.1-34, Fig. B-1

© 2007 UniStar Nuclear Services, LLC. All rights reserved.
COPYRIGHT PROTECTED

Figure 3.5-7—Controlled Area Ventilation Flow Diagram
(Page 2 of 6)

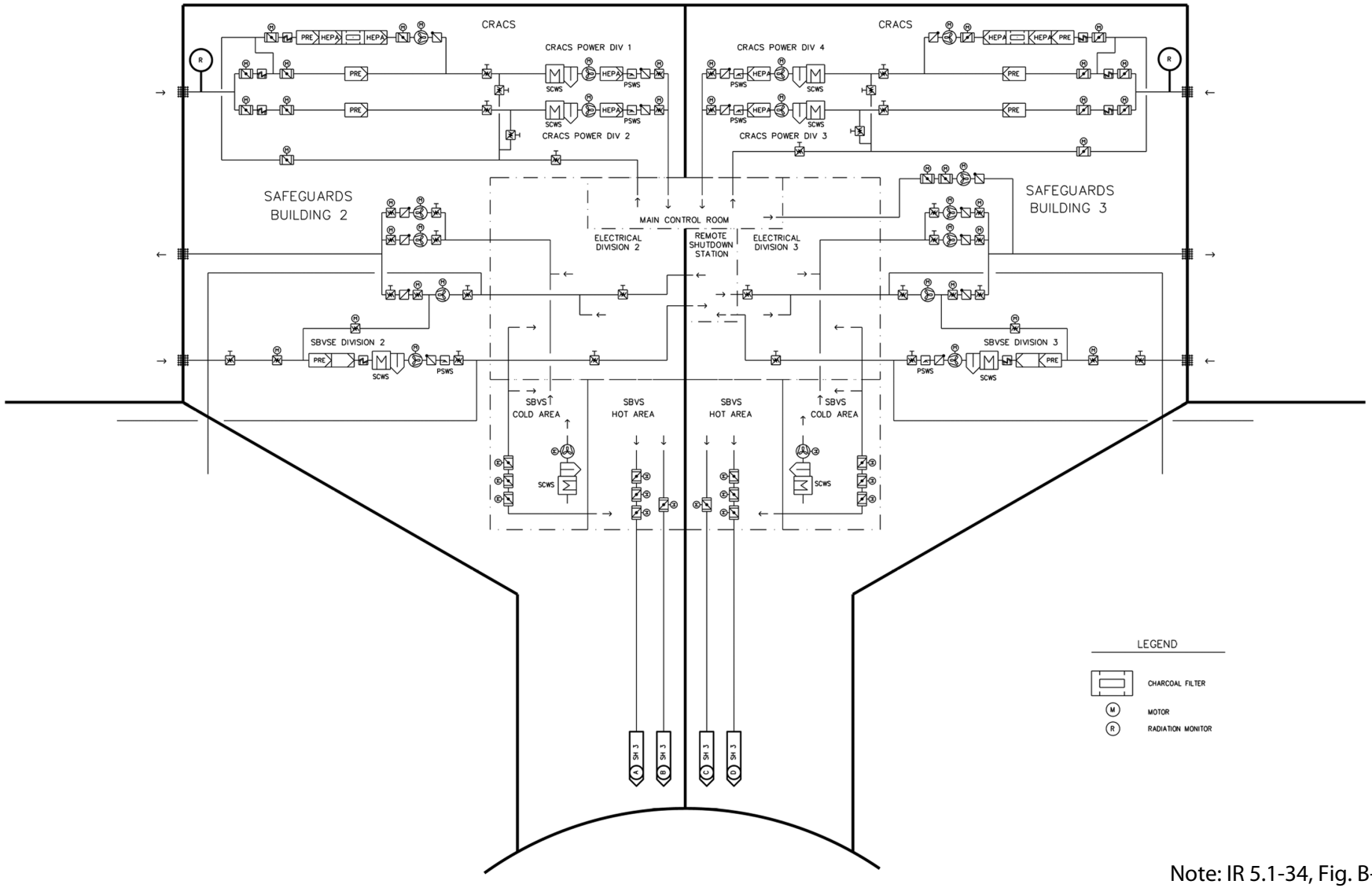

Note: IR 5.1-34, Fig. B-1

© 2007 UniStar Nuclear Services, LLC. All rights reserved.
COPYRIGHT PROTECTED

Figure 3.5-7—Controlled Area Ventilation Flow Diagram
(Page 3 of 6)

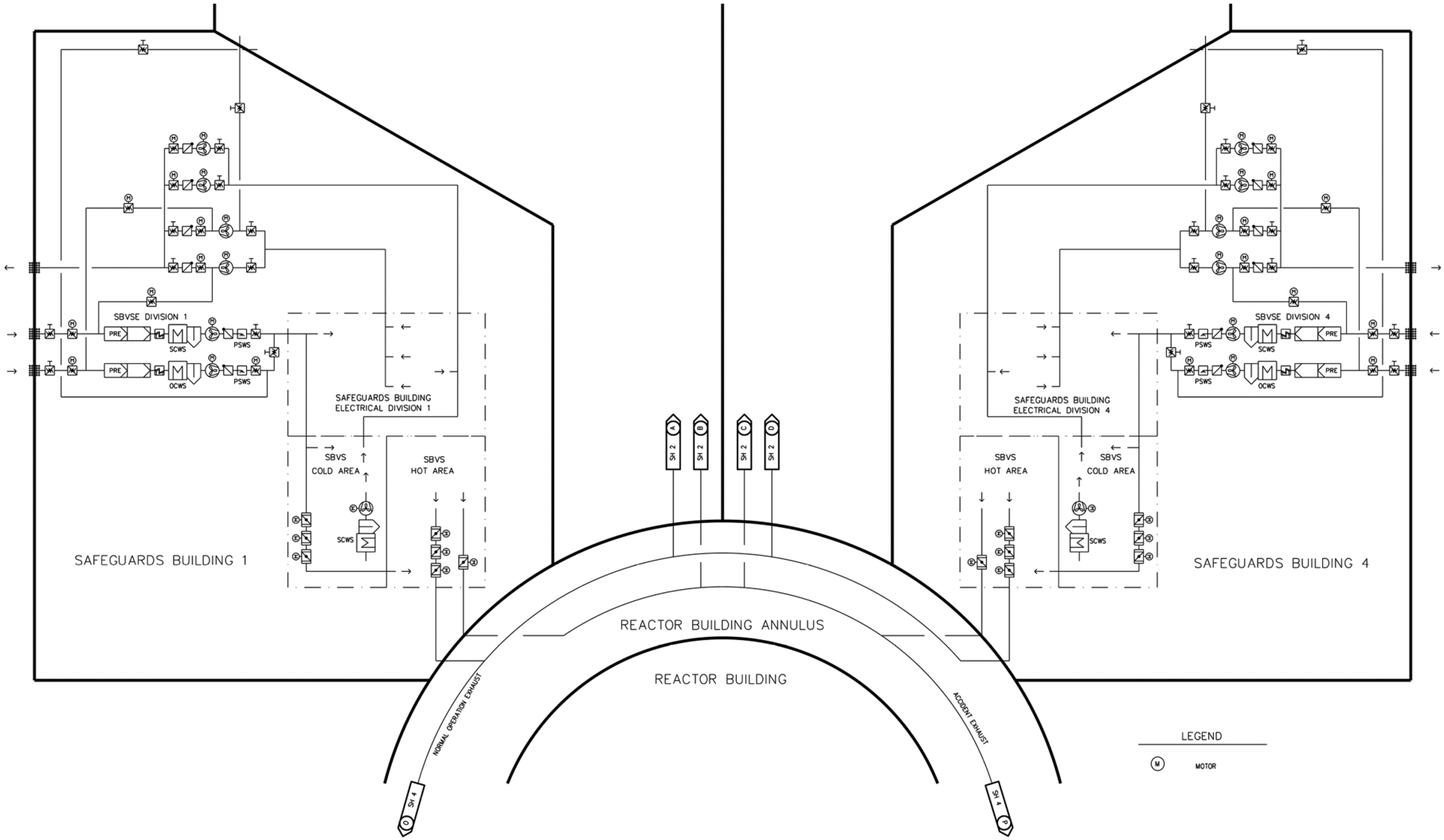

Note: IR 5.1-34, Fig. B-1

© 2007 UniStar Nuclear Services, LLC. All rights reserved.
COPYRIGHT PROTECTED

Figure 3.5-7—Controlled Area Ventilation Flow Diagram
(Page 4 of 6)

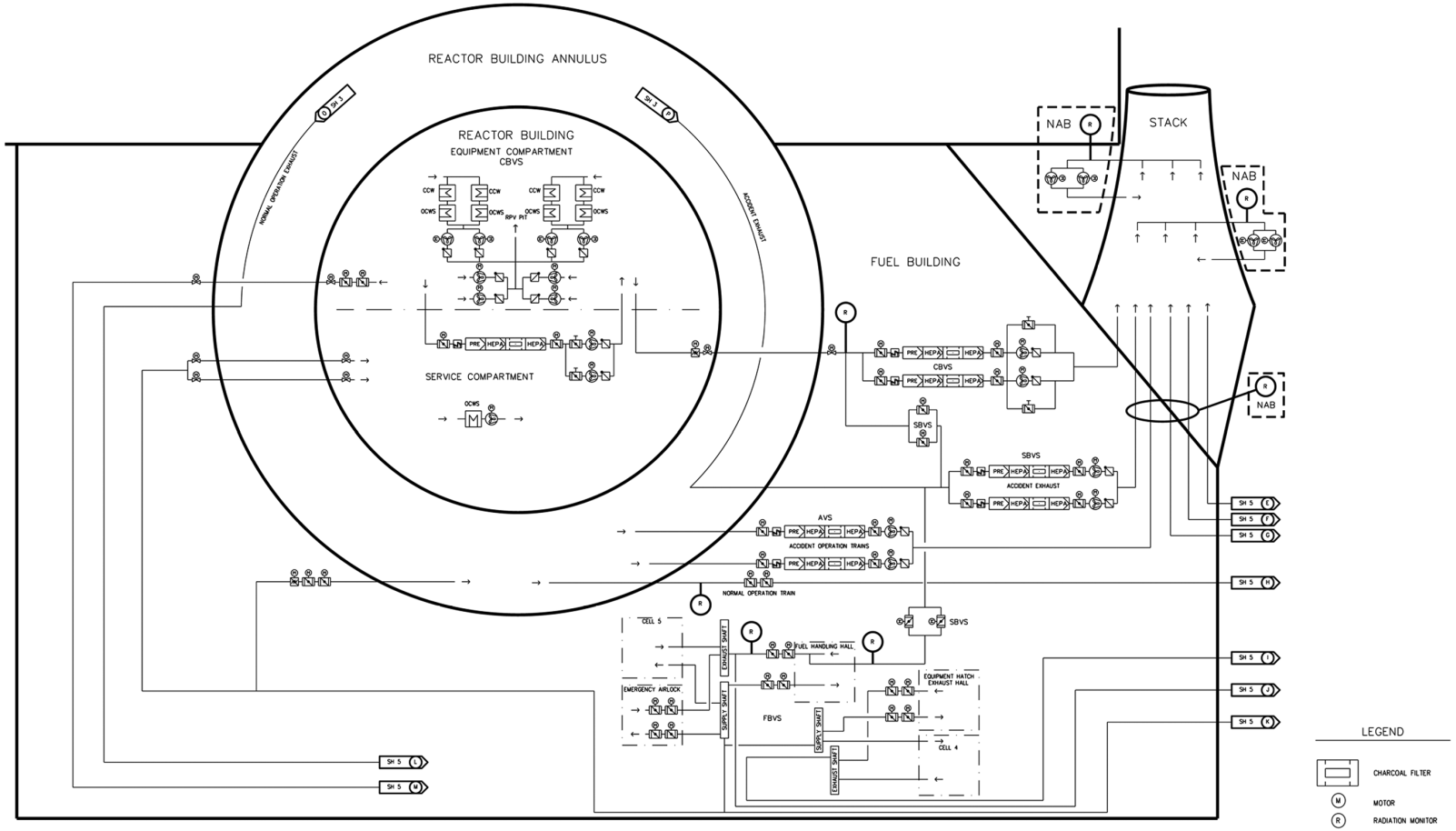

Note: IR 5.1-34, Fig. B-1

© 2007 UniStar Nuclear Services, LLC. All rights reserved.
COPYRIGHT PROTECTED

Figure 3.5-7—Controlled Area Ventilation Flow Diagram
(Page 5 of 6)

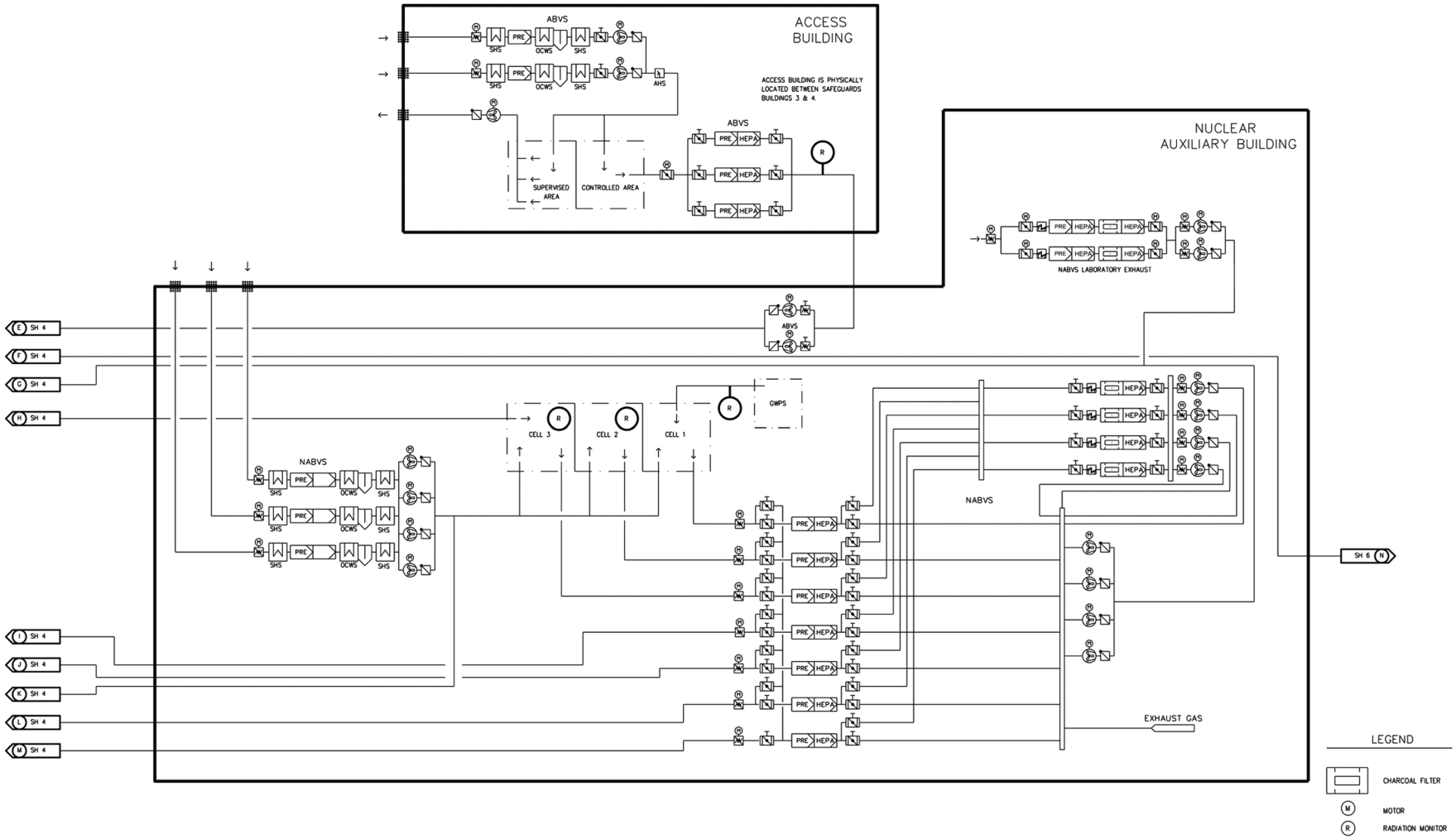

Note: IR 5.1-34, Fig. B-1

© 2007 UniStar Nuclear Services, LLC. All rights reserved.
COPYRIGHT PROTECTED

Figure 3.5-7—Controlled Area Ventilation Flow Diagram
(Page 6 of 6)

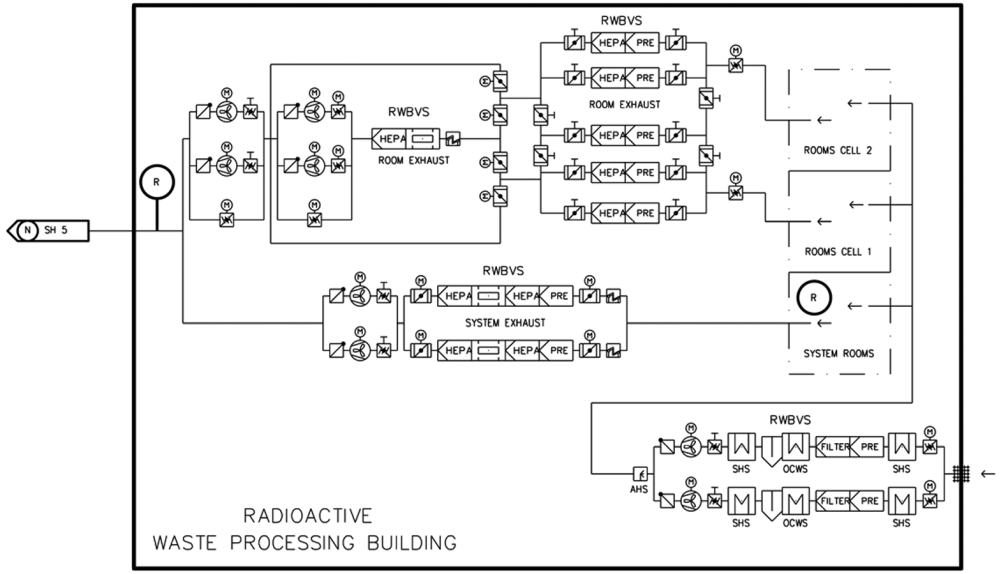

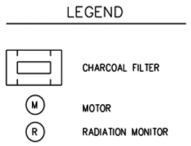

Note: IR 5.1-34, Fig. B-1

© 2007 UniStar Nuclear Services, LLC. All rights reserved.
COPYRIGHT PROTECTED

Figure 3.5-8—Solid Waste System Flow Diagram

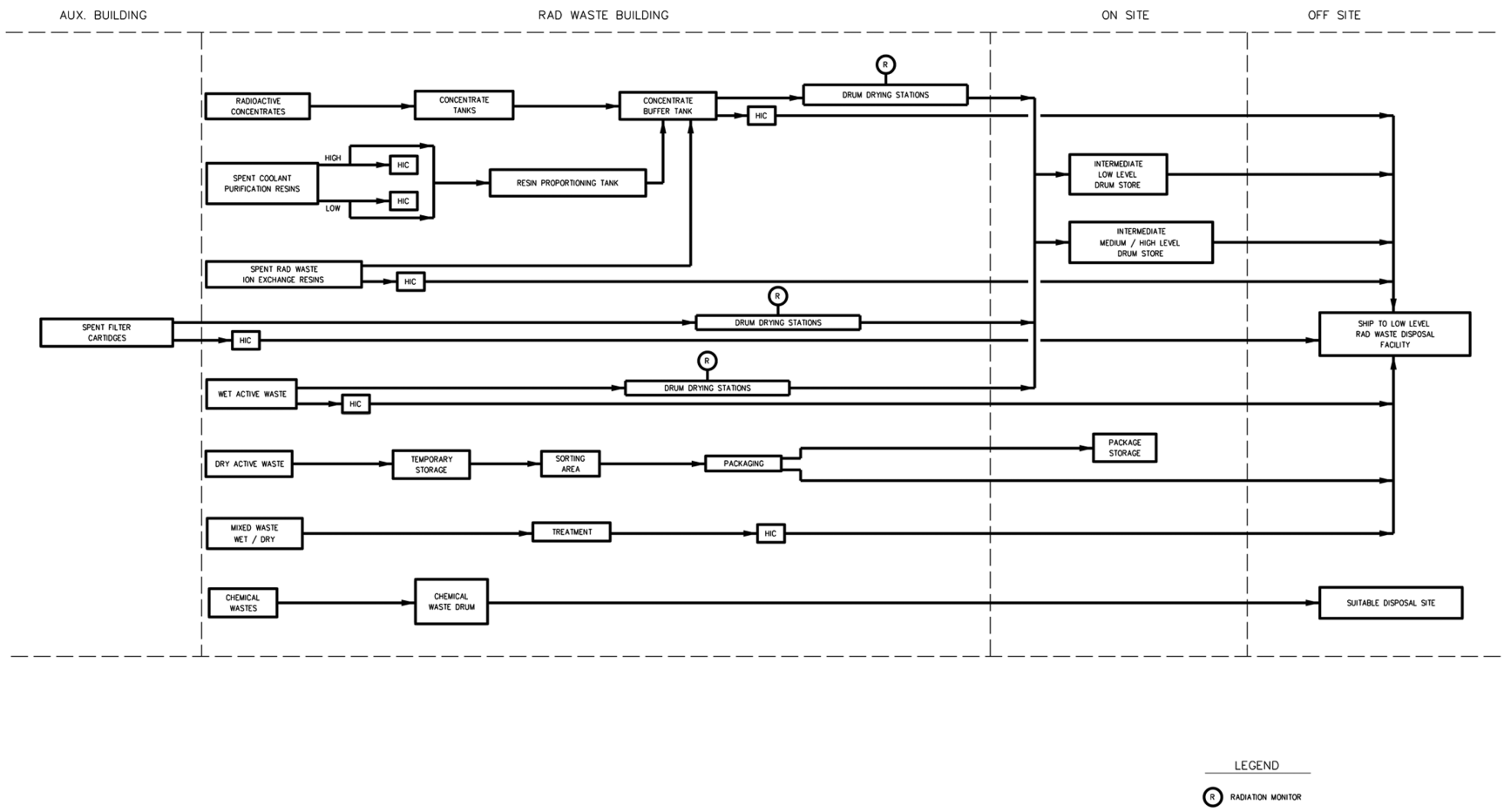

Note: DCD Figure 11.4-1 - KPC01T2

© 2007 UniStar Nuclear Services, LLC. All rights reserved.
COPYRIGHT PROTECTED

3.6 NON-RADIOACTIVE WASTE SYSTEMS

This section provides a description of non-radioactive waste systems for CCNPP Unit 3 and the chemical and biocidal characteristics of each non-radioactive waste stream discharged from the unit. The non-radioactive waste streams include: (1) effluents containing chemicals or biocides; (2) sanitary system effluents; and (3) other effluents.

3.6.1 EFFLUENTS CONTAINING CHEMICALS OR BIOCIDES

Chemicals are typically used to control water quality, scale, corrosion and biological fouling. Sources of non-radioactive effluents include plant blowdown, sanitary wastes, floor and equipment drains, and storm water runoff.

As described in Section 3.3.2, the treatment of non-radioactive effluents will be performed by the Circulating Water Treatment System, the Essential Service Water (Ultimate Heat Sink)Treatment System, the Liquid Waste Processing System and the Waste Water Treatment Plant. Table 3.6-1 lists the various chemicals processed through these systems. Chemical concentrations within effluent streams from the plant will be controlled through engineering and operational/administrative controls in order to meet NPDES requirements at the time of construction and operation.

Naturally occurring substances (e.g., marine growth) will not be changed in form or concentration by plant operations. These naturally occurring substances that are not sloughed off will removed to a landfill.

The Chesapeake Bay and a desalinization plant will supply cooling water for CCNPP Unit 3. Table 3.6-2 identifies the principal constituents found in the Chesapeake Bay water and desalinization plant output (permeate and reject). Chesapeake Bay water quality is discussed in Section 2.3.3.1.2. Effluent discharge flows into the bay are provided in ER Table 3.3-1 and ER Figure 3.3-1.

Evaporative cooling systems include the Circulating Water Supply System and the Essential Service Water System (ESWS) (Ultimate Heat Sink). Some of the cooling water associated with these systems is lost through evaporation via their cooling towers as discussed in Section 3.3. During warm weather, when the difference between the air temperature and the water temperature is relatively small, cooling of the water is almost entirely the result of the extraction of heat through evaporation of water to the air. Under extreme winter conditions (e.g., below zero), when the air is much colder than the water, as much as half of the cooling may be the result of sensible heat transfer from the water to the air with the remainder of the cooling being through evaporation. The Circulating Water System and ESWS cooling towers will be based on two cycles of concentration. No seasonal variations in cycles of concentration are expected.

Section 3.6.3.2 describes the effluent water chemical concentrations from other sources and the water treatment for general plant use and effluents from the resultant waste stream.

3.6.2 SANITARY SYSTEM EFFLUENTS

The purpose of this section is to identify the anticipated volume and type of sanitary waste effluents generated during construction and operation of CCNPP Unit 3. Sanitary waste systems installed during pre-construction and construction activities will likely include portable toilets supplied and serviced by a licensed sanitary waste treatment contractor. Based on an anticipated construction work force of 1000 people in the first year of construction activities and 4000 people in the second through fifth year of constructions activities, the

© 2007 UniStar Nuclear Services, LLC. All rights reserved.
COPYRIGHT PROTECTED

quantity of sanitary waste expected to be generated is 6500 gpd (24,605 lpd) for the first year, and 26,000 gpd (98,420 lpd) for years 2 through 5, or 4.5 gpm (17.0 lpm) and 13.5 gpm (51.1 lpm), respectively. Sanitary waste will be removed offsite during pre-construction and construction activities and will not add to the existing on-site discharge effluents.

During the Operations phase for CCNPP Unit 3, a Waste Water Treatment Plant will collect sanitary wastes. It will be designed for domestic waste only and exclude industrial materials, such as chemical laboratory wastes, and will be sized to accommodate the needs of personnel associated with the unit. The Waste Water Treatment Plant System will be monitored and controlled by trained operators. The CCNPP Unit 3 Waste Water Treatment Plant System will be dedicated to CCNPP Unit 3 and will not process waste from CCNPP Units 1 and 2.

The CCNPP Unit 3 Waste Water Treatment Plant's system capacity and unit loading factors are provided in Table 3.6-7. The CCNPP Unit 3 Waste Water Treatment Plant is expected to treat sanitary waste the same as other Waste Water Treatment Plants in Maryland and meet similar limitations. Therefore, effluent characteristics for the CCNPP Unit 3 Waste Water Treatment Plant are expected to be similar to those for the CCNPP Units 1 and 2 Waste Water Treatment Plant. In addition, similar to the CCNPP Units 1 and 2 Waste Water Treatment Plant, the CCNPP Waste Water Treatment Plant discharge will be processed along with other waste streams, and will not affect storm water runoff.

CCNPP Unit 3 sanitary waste handling will be contracted to a private company whose personnel are licensed by the State of Maryland as Waste Treatment Plant Operators. The Radiation Protection and Chemistry Manager will have oversight of this company to ensure the new plant meets required effluent parameters. The waste sludge will be removed by a private company and transported to a waste processing plant. Sludge will be checked for radiological contaminants prior to release. If any plant related radionuclides are identified, the sludge will be disposed of as low level radioactive waste.

Effluent discharges are regulated under the provisions of the Federal Water Pollution Control Act (USC, 2007) and the conditions of discharge for the units would be specified in the National Pollution Discharge Elimination System (NPDES) permit. It is expected that effluent limits for the CCNPP Unit 3 sanitary system will be similar to those already in effect for the CCNPP Unit 1 and 2 sanitary system. Table 3.6-3 lists anticipated CCNPP Unit 3 liquid and solid effluents associated with the Waste Water Treatment Plant (MD, 2002). It includes flow rates, pollutant concentrations, and the biochemical oxygen demand at the point of release. Sanitary effluents generated during construction of CCNPP Unit 3 are expected to be less than those generated during operation.

The Maryland Department of the Environment (MDE) has authority from the U.S. Environmental Protection Agency (EPA) to issue NPDES permits. Table 1.3-1 lists the environmental-related permits and authorizations for CCNPP Unit 3.

3.6.3 OTHER EFFLUENTS

This section describes miscellaneous non-radioactive gaseous, liquid, or solid effluents not addressed in Sections 3.6.1 or 3.6.2.

3.6.3.1 Gaseous Effluents

Non-radioactive gaseous effluents result from testing and operating the diesel generators and from their related fuel storage tanks, the CWS cooling tower, and the four smaller ESWS cooling towers. These effluents commonly include particulates, sulfur oxides, carbon monoxide,

© 2007 UniStar Nuclear Services, LLC. All rights reserved.
COPYRIGHT PROTECTED

hydrocarbons and nitrogen oxides. Gaseous effluent releases will comply with Federal, State, and local emissions standards and requirements. Table 1.3-1 lists the environmental-related permits and authorizations for CCNPP Unit 3.

CCNPP Unit 3 will have six standby diesel generators (four Emergency Diesel Generators (EDGs), and two Station Blackout (SBO) diesel generators). The auxiliary boilers will use electric heating, and do not contribute directly to air emissions.

It is estimated that each EDG will be tested approximately 4 hours every month, plus an additional 24 to 48 hours once every 2 years. It is estimated that each SBO diesel generator will be tested approximately 4 hours every quarter, plus an additional 12 hours every year for maintenance activities. The SBO diesels will also be tested for an extended period of about 12 hours every 18 months.

The ~~prodects~~ products of diesel fuel combustion exhausted from the EDGs represent emissions to the atmosphere. The exhaust stream emitted from the EDGs contains various pollutants. The emissions commonly include particulates, sulfur oxides, carbon monoxide, hydrocarbons, and nitrogen oxides. Diesel generator emissions will be released from an exhaust stack located on top of the diesel generator buildings at an elevation of 78 ft (23.8 m). Pre-treatment of diesel generator exhaust will depend on future diesel technology that has yet to be determined. Diesel generator exhaust will meet Environmental Protection Agency (EPA) Tier 4 requirements when CCNPP Unit 3 is operational. ~~Yearly emissions anticipated from the standby diesel generators~~ Maximum expected emissions during plant operation are provided in Table 3.6-4 (MDPSC, 2008). ~~and assume a conservative run time for each diesel of 100 hours per year.~~

3.6.3.2 Liquid Effluents

Chesapeake Bay water will serve as the source of cooling water for the Circulating Water Supply System.

Fresh water for CCNPP Unit 3 will be supplied by a desalinization plant that utilizes a sea water reverse osmosis (SWRO) process. The desalinization plant will receive seawater from Chesapeake Bay and will be designed to provide a desalinizated water output of 1.75E+06 gpd (6.62E+06 lpd). The desalinization plant will provide water for the Essential Service Water(Ultimate Heat Sink) System, the Demineralized Water Distribution System, the Potable and Sanitary Water Distribution System and the Fire Protection System as described in Section 3.3.

The SWRO reject stream is brine with a salt concentration of approximately 2 to 1 above normal Chesapeake Bay water levels. The brine is classified as Industrial Waste by the U.S. Environmental Protection Agency. The reject stream water quality for a typical one pass SWRO system is shown in Table 3.6-2. The SWRO effluent (discharge) is directed into the CCNPP Unit 3 Circulating Water System blowdown.

The Circulating Water Supply System takes Chesapeake Bay water into a closed cooling system, which utilizes a cooling tower to cool the water after it has cooled the plant's condensate. A portion of the Circulating Water Supply System water is constantly returned as blowdown to the Chesapeake Bay via a discharge pipe. Accordingly, mixing the discharge of the desalinization plant with the Circulating Water Supply System blowdown will result in a slight dilution of the Circulating Water Supply System discharge. As such, the environmental impact of the desalinization plant discharge will be enveloped by that of the Circulating Water Supply System discharge. During plant shutdown, administrative controls will be used to control the salt concentration discharged to the Chesapeake Bay.

© 2007 UniStar Nuclear Services, LLC. All rights reserved.
COPYRIGHT PROTECTED

Non-radioactive liquid effluents that could potentially drain to the Chesapeake Bay are limited under the NPDES permit. There are three anticipated outfalls for release of non-radioactive liquid effluents from CCNPP Unit 3:

- one for plant effluents (e.g., effluent from the sewage treatment, desalinization plant, cooling tower blowdown, etc.) via the offshore, submerged diffuser
- one for stormwater via various surface outlets throughout the CCNPP Unit 3 site area
- one for intake screen backwash

These outfalls will be controlled under the CCNPP Unit 3 NPDES permit. Anticipated effluent water chemical concentrations from CCNPP Unit 3 are included in Table 3.6-5.

Other non-radioactive liquid waste effluents generated in the controlled area (i.e., Steam Generator Blowdown Demineralizing System), are managed and processed by the Liquid Waste Storage System and the Liquid Waste Processing System. Non-radioactive liquid waste first collects in a tank where it is pre-treated chemically or biologically. Chemical pre-treatment gives the waste an optimum pH value; biological pre-treatment allows organics to be consumed. If deemed cleaned, it can be routed directly to one of the monitoring tanks; otherwise, once pre-treated, the wastes are forwarded to the Liquid Waste Processing System for treatment. Treatment may consist of evaporation, centrifugation, demineralization/filtration, chemical precipitation (in connection with centrifugation), or organic decomposition (in connection with centrifugation). After the waste water has been treated, it is received in one of two monitoring tanks, which also receive treated liquid radwaste. Waste water is then sampled and analyzed, and if within the limits for discharge, it can be released. Similar to CCNPP Units 1 and 2, CCNPP Unit 3 non-radioactive liquid waste effluents will not be directly discharged.

3.6.3.3 Hazardous Wastes

Hazardous wastes are materials with properties that make them dangerous or potentially harmful to human health or the environment, or that exhibit at least one of the following characteristics: ignitability, corrosivity, reactivity or toxicity. Federal Resource Conservation and Recovery Act regulations govern the generation, treatment, storage and disposal of hazardous wastes. Hazardous waste is defined as any solid, liquid or gaseous waste that is not mixed waste, is listed as hazardous by any federal or state regulatory agency or meets the criteria of Subpart D of 40 CFR 261 (CFR, 2007) or Code of Maryland Regulation 26.13.02 (COMAR, 2007).

A Hazardous Waste Minimization Plan will be developed and maintained that documents the current and planned efforts to reduce the amount or toxicity of the hazardous waste to be generated at CCNPP Unit 3. Hazardous wastes will be collected and stored in a controlled access temporary storage area (TSA). A Hazardous Material and Oil Spill Response guideline will be maintained that defines HAZMAT team positions and duties. Procedures will be put in place to minimize the impact of any hazardous waste spills in the unlikely event of a spill. Containers of known hazardous waste received at a TSA will be transported offsite within 90 days of the containers accumulation date according to the applicable section/unit procedures. The Radiation Protection and Chemistry Manager will be responsible for coordinating the activities of waste transport disposal vendors or contractors while they are on site, ensuring that the transporter has an EPA identification number.

Table 3.6-6 lists the types and quantities of hazardous waste generated at CCNPP Units 1 and 2. The table is based on the CCNPP biennial hazardous waste reports submitted to the MDE for

© 2007 UniStar Nuclear Services, LLC. All rights reserved.
COPYRIGHT PROTECTED

2001, 2003, and 2005. The quantity of hazardous wastes generated at CCNPP Unit 3 is expected to be similar to or less than that at CCNPP Units 1 and 2.

3.6.3.4 Mixed Wastes

Mixed waste includes hazardous waste that is intermixed with a low level radioactive source, special nuclear material, or byproduct material. Federal regulations governing generation, management, handling, storage, treatment, disposal, and protection requirements associated with these wastes are contained in 10 CFR (NRC regulations) and 40 CFR (Environmental Protection Agency regulations). Mixed waste is generated during routine maintenance activities, refueling outages, radiation and health protection activities and radiochemical laboratory practices. Section 5.5.2 discusses mixed waste impacts, including quantities of mixed waste generated. The quantity of mixed waste generated at CCNPP Unit 3 is expected to be small, as it is at other nuclear power plants.

The management of mixed waste for CCNPP Unit 3 will comply with the requirements of EPA's Mixed Waste Enforcement Policy and the Memorandum of Understanding with the State of Maryland until an approved, EPA permitted disposal facility becomes available (MDE, 2002). CCNPP Units 1 and 2 currently ship some mixed waste offsite to permitted facilities. This occurs infrequently, and is dependent on the waste matrix. It is expected that CCNPP Unit 3 will also infrequently ship some mixed waste to permitted facilities.

Mixed wastes stored in a TSA will be inventoried and a list will be maintained according to CCNPP Unit 3 procedures, and periodic inspections of mixed waste will be conducted according to these same procedures.

3.6.3.5 Solid Effluents

Operation of an industrial waste facility for private use at the CCNPP site does not require a permit but must comply with the regulations imposed by the State of Maryland for construction, installation and operation of solid waste facilities. Acceptable wastes for a landfill containing land clearing debris generated during construction of the units include earthen material such as clays, sands, gravels and silts; topsoil; tree stumps; root mats; brush and limbs; logs; vegetation; and rock.

Other waste materials such as office paper and aluminum cans will be recycled locally. Putrescible wastes will be disposed in a permitted offsite disposal facility.

The types of solid effluents that would be expected generated by CCNPP Unit 3 include hazardous waste; mixed wastes; and cooling water intake debris, trash, and solid effluents. Hazardous waste generation is discussed in Section 3.6.3.3, and mixed waste generation is discussed in Section 3.6.3.4.

Based on the operating experience at CCNPP Units 1 and 2 , it is expected that CCNPP Unit 3 will have essentially zero solid waste effluent. This is because CCNPP Units 1 and 2 recycles, recovers, or sends offsite for disposal virtually all of its solid waste, and does not release solid waste as an effluent. Disposal, recycling, and recover of solid wastes (e.g., scrap metal, petroleum product waste, etc) is described in Section 5.5.1. In summary:

- Non-radioactive solid wastes (e.g., office wastes, recyclables) are collected temporarily on the CCNPP site and disposed of at offsite, licensed disposal and recycling facilities.

© 2007 UniStar Nuclear Services, LLC. All rights reserved.
COPYRIGHT PROTECTED

- Debris (e.g., vegetation) collected on trash racks and screens at the water intake structure are disposed of as solid waste.

- Scrap metal, used oil, antifreeze (ethylene or propylene glycol), and universal waste will be collected and stored temporarily on the CCNPP site and recycled or recovered at an offsite permitted recycling or recovery facility, as appropriate. Used oil and antifreeze are not controlled hazardous substances in Maryland unless they have been combined or mixed with characteristic or listed hazardous wastes. Typically, used oil and antifreeze are recycled. If they are not, they will disposed of as solid waste in accordance with the applicable regulations.

3.6.4 REFERENCES

CFR, 2007. Title 40, Code of Federal Regulations, Part 261, Identification and Listing of Hazardous Waste, 2007.

COMAR, 2007. Code of Maryland Regulation, 28.13.02, Identification and Listing of Hazardous Waste, 2007.

MD, 2002. Summary Report and Fact Sheet for Calvert Cliffs Nuclear Power Plant, Inc, Maryland Department of the Environment, Industrial Discharge Permits Division – Water Management Administration, March 29, 2002.

MDE, 2002. Letter from H.L. Dye (MDE) to L. Linden (Constellation Nuclear Services), RE: Amended MOU – Mixed Wastes at Calvert Cliffs Nuclear Plant, November 12, 2002.

MDPSC, 2008. Calvert Cliffs 3 Nuclear Project, LLC – UniStar Nuclear Operating Services, LLC – Supplemental Information Regarding Air Modeling, October 13, 2008.
Case No. 9127, Maryland Public Service Commission, August 13, 2008, Website: http://webapp.psc.state.md.us/Intranet/CaseNum/CaseAction.cfm?CaseNumber=9127. Date accessed: September 16, 2008.

USC, 2007. Title 33, United States Code, Part 1251, Federal Water Pollution Control Act, 2007.

© 2007 UniStar Nuclear Services, LLC. All rights reserved.
COPYRIGHT PROTECTED

Table 3.6-1—Treatment System Processing Chemicals

(Page 1 of 2)

System	Operating Cycle(s)	Chemical Processed	Estimated Total Amount Used per Year	Frequency of Use	Avg./Max. Concentration in Waste Stream (mg/l)
Circulating Water Treatment System (CWS Blowdown)[a]	Normal Operating Conditions and Normal Shutdown/ Cooldown	Sodium Bisulfite	191,500 lbs (86,863 kg)	Continuous	TRC: <0.1 / <0.1
		Sodium Hypochlorite	182,500 gal (690,838 l)	Continuous	TRC: <0.1 / <0.1
		Antifoam	18,250 gal (69,084 l)	Continuous	TOC: 1.4 (MAX)
		Dispersant	191,500 lbs (86,863 kg)	Continuous	TSS: 5.2 (MAX)
ESWS Water Treatment System (UHS System Blowdown)[b]	Normal Operating Conditions and Normal Shutdown/ Cooldown	Sodium Hypochlorite Surfactant	(Combined Volume for Both Chemicals)	3 times/week	TRC: <0.1 / <0.1
			1,000 gal (3,786 l)		
Liquid Waste Storage and Processing Systems[c]	Normal Operating Conditions and Normal Shutdown/ Cooldown	Sulfuric Acid	22,900 gal (86,686 l)	2 times/week	pH: 6.0 – 9.0
		Sodium Hydroxide	2,400 gal (9,085 l)	1/month	
Waste Water Treatment Plant System[d]	Normal Operating Conditions and Normal Shutdown/ Cooldown	Sodium Hypochlorite	800 gal (3,028 l)	1/month	TRC: <0.1 / <0.1
		Sodium Thiosulfate	1,000 lbs (454 kg)	1/month	TRC: <0.1 / <0.1
		Soda Ash	12,000 lbs (5,443 kg)	1/month	pH: 6.3 – 8.6
		Alum/ Polymer	200 gal (757 l)	1/month	TSS: 3.4 / 45

Key:

gal – gallons
L - liters
kg – kilograms
lbs – pounds
CWS – Circulating Water System
TOC – Total Organic Carbon
TRC – Total Residual Chlorine
TSS – Total Suspended Solids
UHS – Ultimate Heat Sink

Notes:

© 2007 UniStar Nuclear Services, LLC. All rights reserved.
COPYRIGHT PROTECTED

Table 3.6-2—Desalination of Plant Water Quality (SWRO Process)

Constituents	Feed Water Values	Permeate Values		Reject Values	
		50% Recovery	40% Recovery	50% Recovery	40% Recovery
Barium, mg/l	0.05	0.0	0.0	0.1	0.08
Calcium, mg/l	350	1.8	1.57	698.31	582.31
Magnesium, mg/l	700	3.64	3.18	1,395.58	1,164.59
Potassium, mg/l	250	6.7	5.92	493.4	412.73
Sodium, mg/l	6,041 *	131.76	116.16	11,951.2	9,990.56
Strontium, mg/l	4	0.02	0.02	7.98	6.65
M Alkalinity, mg/l (as $CaCO_3$)	150	4.02	3.55	287.92	242.46
Ammonia, mg/l	1	0.37	0.34	1.63	1.44
Chlorides, mg/l	11,000	217.98	192.13	18,972.2	18,205.99
Fluorides, mg/l	0.6	0.02	0.01	1.18	0.99
Nitrates, mg/l (as NO_3)	<l 0	2.16	1.98	16.07	15.35
pH, standard units	7.7 - 7.8	6.32	6.31	7.54	7.56
Silica, mg/l (total)	3	0.1	0.09	5.9	4.94
Sulfates, mg/l	1,500	3.01	2.63	2,997.45	2,498.35
Total Dissolved Solids (TDS)	19,973.6	371.56	327.6	39,658.9	33,137.34

Notes:

Recovery values are based on 20,000 mg/l TDS

Values in the table do not include wastes from the membrane filtration equipment, which is essentially Chesapeake Bay water having a total suspended solids (TSS) content ten times that of the feed water. Membrane filtration waste is assumed to be 10% of the influent.

At 50% recovery, the waste will be twice as concentrated as the feed water, which is essentially the same as the blowdown from the Circulating Water Cooling Tower.

© 2007 UniStar Nuclear Services, LLC. All rights reserved.
COPYRIGHT PROTECTED

Table 3.6-3—Waste Water Treatment Plant System Effluents

Parameter[b]	Concentrations	
	Daily Maximum	Monthly Average
Biochemical Oxygen Demand		10.6 mg/l
Chemical Oxygen Demand	26 mg/l	
Total Organic Carbon	5.6 mg/l	
Total Suspended Solids		3.4 mg/l
pH	6.3-8.6	
Ammonia	<1.0 mg/l	
Flow		See Table 3.3-1
Arsenic	0.014 mg/l	
Chromium	0.041 mg/l	
Copper	0.022 mg/l	
Nickel	0.028 mg/l	
Zinc	0.060 mg/l	
Cyanide[c]	0.039 mg/l	
Total Residual Chlorine	<0.1 mg/l	
Fecal Coliform	12 mg/l	

Notes:

(a) The indicated parameters and concentrations are based on effluent for the CCNPP Units 1 and 2 Waste Water Treatment Plant. Effluent characteristics for the CCNPP Unit 3 Waste Water Treatment Plant are anticipated to be similar. For the anticipated, treated sanitary waste water flow for the CCNPP Unit 3 Waste Water Treatment Plant, refer to ER Table 3.3-1

(b) All other parameters were below the detection limit level which was below water quality standards.

(c) As a condition of CCNPP Units 1 and 2 NPDES permit, CCNPP was requested to determine the source of cyanide.

© 2007 UniStar Nuclear Services, LLC. All rights reserved.
COPYRIGHT PROTECTED

Table 3.6-4—~~Non-Radioactive Gaseous Effluents~~

~~Source~~	~~Annual Releases in lbs/yr (kg/yr)~~			
	~~SOx~~	~~Particulate~~	~~NOx~~	~~Hydrocarbon~~
~~Emergency Diesel Generator~~	~~7.89 (3.58)~~	~~62.06 (28.14)~~	~~1,550.93 (703.50)~~	~~434.26 (196.98)~~
~~Station Blackout Diesel Generator~~	~~0.89 (0.40)~~	~~21.88 (9.92)~~	~~546.96 (248.10)~~	~~153.15 (69.47)~~
~~Annual Total (4xEDG + 2xSBO)~~	~~33.3 (15.1)~~	~~292 (132)~~	~~7,298 (3,310)~~	~~2,043 (927)~~

Table 3.6-4—Non-Radioactive Gaseous Effluents

Source	Maximum Expected Emissions During Plant Operation (tpy)					
	PM	PM_{10}	NO_X	CO	VOC	SO_2
CWS Cooling Tower (1 tower)	325.2	260.2	0.0	0.0	0.0	0.0
ESWS Cooling Towers (2 towers)	16.3	16.3	0.0	0.0	0.0	0.0
Diesel Generators (6 units)	1.6	1.6	22.8	29.0	3.8	1.3
Total	343.1	278.1	22.8	29.0	3.8	1.3

© 2007 UniStar Nuclear Services, LLC. All rights reserved.
COPYRIGHT PROTECTED

Table 3.6-5—Anticipated Effluent Water Chemical Concentrations

Outfall	Parameter(s)[a]	Concentration[a], mg/l	
		Daily Maximum	Monthly Average
Plant Effluent via Submerged Diffuser[b]	Total Residual Chlorine	0.013	0.0075
Storm Water Runoff	Total Suspended Solids	100	30
	Oil & Grease	20	15
	pH	6.0 to 9.0	NA
Intake Screen Backwash[c]	NA	---	---

Key:
mg/l – milligrams per liters
NA – Not Applicable

Notes:

© 2007 UniStar Nuclear Services, LLC. All rights reserved.
COPYRIGHT PROTECTED

Table 3.6-6—Biennial Hazardous Waste Management CCNPP Units 1 and 2

	Year/Quantity (lbs/kg)					
	2001		2003		2005	
Hazardous Waste	(lbs)	(kg)	(lbs)	(kg)	(lbs)	(kg)
Sulfuric Acid	840	381	N/A	N/A	N/A	N/A
Ammonium Hydroxide (lead solution)	80	36	N/A	N/A	N/A	N/A
Epoxy Adhesive/Coatings	10	5	N/A	N/A	522	237
Hydrazine	1	0.5	N/A	N/A	N/A	N/A
Corrosive Liquids	161	73	N/A	N/A	N/A	N/A
Mercury-filled Equipment	5	2	N/A	N/A	15	7
Used Oil (with solvents)	1,200	544	N/A	N/A	N/A	N/A
Paint	4,320	1,960	2,320	1,052	5,115	2,320
PCB Capacitors	4	2	N/A	N/A	N/A	N/A
PCB Light Ballasts	20	9	11	5	N/A	N/A
Flammable Liquid	N/A	N/A	800	363	N/A	N/A
Compressed Gases	N/A	N/A	30	14	N/A	N/A
Lab Pack Chemicals (flammable)	N/A	N/A	200	91	253	115
Lab Pack Chemicals (toxic)	N/A	N/A	80	36	N/A	N/A
Aqueous Ammonia Solution	N/A	N/A	N/A	N/A	6,000	2,722
Activated Carbon	N/A	N/A	N/A	N/A	1	0.5
Lead (debris)	N/A	N/A	N/A	N/A	150	68
Butane	N/A	N/A	N/A	N/A	2	1
Propane	N/A	N/A	N/A	N/A	4	0.9
Total	6,641	3,012.5	3,441	1,561	12,062	5,471.4

Key:
N/A – Not Applicable
(lbs) – pounds
(kg) - kilogram

© 2007 UniStar Nuclear Services, LLC. All rights reserved.
COPYRIGHT PROTECTED

Table 3.6-7—CCNPP Unit 3 Waste Water Treatment Plant Capacity and Unit Loading

Average Daily Flows	2
Number of people during normal operation	363/day
Flow assumption	~~30~~15 gpd (~~132.5~~56.8 lpd)/person/shift
Shift per day	3
Peak flow during outages (times daily average flow)	3
Mass BOD and TSS per person	0.055 lb (0.25 kg)/day/person
Minimum number of people using shower facilities during normal operation	250/day/shift
Construction phase staffing	2,000/day/shift
Design flow-normal operation	52,500 gpd (1.98 E+5 lpd)
Design flow-outages (peak)	183,000 gpd (6.93 E+5 lpd)
Design flow-construction CCNPP Unit 3	250,000 gpd (9.46 E+5 lpd)
BOD/TSS (estimated)	
Normal plant operations	125 lb (56.7 kg)/day
Outages	375 lb (170 kg)/day
CCNPP Unit 3 construction	400 lb (181.4 kg)/day

© 2007 UniStar Nuclear Services, LLC. All rights reserved.
COPYRIGHT PROTECTED

3.7 POWER TRANSMISSION SYSTEM

The NRC criteria for review of power transmission systems are presented in Section 3.7 of NUREG-1555 (NRC, 1999). To address these criteria, this section of the Environmental Report describes the transmission system from the CCNPP Unit 3 substation to its connections with the existing CCNPP Units 1 and 2 transmission systems, including lines, corridors, towers, substations, and communication stations. CCNPP Unit 3**,** with an additional 1,562 MWe net rating, would require the following new facilities and upgrades to connect to the existing transmission system:

- One new 500 kV, 16 breaker, breaker-and-a-half substation to transmit power from CCNPP Unit 3 (PJM, 2006)
- Two new 500 kV, 3,500 MVA (normal rating) circuits connecting the new CCNPP Unit 3 substation to the existing CCNPP Units 1 and 2 substation (PJM, 2006)
- Breaker upgrades and associated modifications at Waugh Chapel, Chalk Point and other affected substations (PJM, 2006).

The existing transmission system, constructed and operated for CCNPP Units 1 and 2, was addressed in the Environmental Report submitted with the original plant license application (BGE, 1970) and re-evaluated in the Environmental Report submitted with the license renewal application (BGE, 1998). The existing transmission system consists of two circuits, the North Circuit which connects the CCNPP site to the Waugh Chapel Substation in Anne Arundel County and the South Circuit that connects the CCNPP site to the Mirant Corporation Chalk Point Generating Station in Prince George's County. The North Circuit is composed of two separate three-phase 500 kV transmission lines run on a single right-of-way from the CCNPP site, while the South Circuit is a single three-phase 500 kV line. The existing transmission system will not be addressed in this section, except where it impacts or is impacted by the transmission facilities of CCNPP Unit 3. The routes for the existing two 500 kV circuits from the CCNPP site to the Waugh Chapel Substation and single 500 kV circuit from the CCNPP site to the Chalk Point Generating Station are presented in Figure 3.7-1.

The new transmission facilities would be developed as required by the Annotated Code of Public General Laws of Maryland, Public Utility Companies Article, Title 7, Subtitle 2, Electric Generation Facility Planning (COMAR, 2007a). The Code outlines the legal and regulatory processes necessary to construct a transmission line in Maryland.

3.7.1 SUBSTATION AND CONNECTING CIRCUITS

3.7.1.1 CCNPP Unit 3 Substation

The CCNPP Unit 3 substation would occupy a 700 ft (213 m) by 1,200 ft (366 m) tract of land approximately 1,000 ft (305 m) southeast of CCNPP Unit 3 and 2,000 ft (610 m) east-southeast of the existing switchyard as detailed in Figure 3.7-2. The CCNPP Unit 3 substation would be electrically integrated with the existing CCNPP Units 1 and 2, 500 kV, substation by constructing two approximately 1 mi (1.6 km), 500 kV, 3,500 MVA lines on individual towers. At the existing CCNPP Units 1 and 2 substation, the two line positions previously used for 500 kV circuits 5052 (Calvert Cliffs-Waugh Chapel) and 5072 (Calvert Cliffs-Chalk Point) would be upgraded for use with the two lines to the CCNPP Unit 3 substation. The 5052 and 5072 circuits would be connected to the CCNPP Unit 3 substation, while the 5051 circuit to Waugh Chapel would remain connected to the CCNPP Units 1 and 2 substation (PJM, 2006).

© 2007 UniStar Nuclear Services, LLC. All rights reserved.
COPYRIGHT PROTECTED

The CCNPP Unit 3 substation and transmission lines would be constructed in areas that, at present, are vegetated, contain delineated wetlands and have steep topography. The CCNPP Unit 3 substation area, as detailed in Figure 3.7-2, would be graded level with removal of any vegetation which might be present. Areas under the transmission lines would be cleared of any vegetation that could pose a safety risk to the transmission system, either through arcing or reducing the structural integrity of towers.

3.7.1.2 Connecting Circuits

The CCNPP Unit 3 substation would be electrically integrated with the existing CCNPP Units 1 and 2, 500 kV, substation by constructing two approximately 1 mi (1.6 km), 500 kV, 3,500 MVA lines on individual towers. A topographic map showing the location of the connecting circuits between the two substations is presented in Figure 3.7-2. Line routing would be conducted to avoid or minimize impact on the existing Independent Spent Fuel Storage Installation, wetlands, or threatened and endangered species identified in the local area. The final design of the new and relocated transmission lines has not been completed, but the layout of the new lines will not have any impact on the existing transmission corridor, and all new line construction will be contained within the CCNPP site property lines. No changes to the offsite corridors are required.

3.7.2 ELECTRICAL DESIGN PARAMETERS

3.7.2.1 Circuit Design

The detailed design of the transmission lines has not begun but would include selection of the conductor and conductor configuration and the other design parameters specified by NUREG-1555 (NRC, 1999). Design and construction of transmission lines would be based on the guidance provided by the National Electric Safety Code (NESC) (ANSI/IEEE, applicable version), State and Local regulations , and any requirements of the approved Certificate of Public Convenience and Necessity (CPCN).

While the detailed design of the transmission circuits has not begun, the conductors would be selected to meet the power delivery requirements of CCNPP Unit 3. The two 500 kV lines connecting the existing CCNPP Units 1 and 2 substation and the proposed CCNPP Unit 3 substation would be rated at 3,500 MVA (normal rating) (PJM, 2006). Each phase would use the same three sub-conductor bundles comprised of three 1,590 circular mills, 45/7 aluminum conductor, steel reinforced conductors with 18 in (0.5 m) separation. There would typically be two overhead ground wires of 19#9 Alumoweld® or 7#8 Alumoweld®, but the final design could specify optical ground wire fiber optic cable in place of the Alumoweld® ground wire. The new lines would be designed to preclude crossing of lines wherever possible.

3.7.2.2 Induced Current Analysis

The design of the new transmission circuits would consider the potential for induced current as a design criterion. The NESC has a provision that describes how to establish minimum vertical clearances to the ground for electric lines having voltages exceeding 98 kV alternating current to ground. The clearance must limit the induced current due to electrostatic effects to 5 mA if the largest anticipated truck, vehicle, or equipment were short-circuited to ground. For this determination, the NESC specifies that the lines be evaluated assuming a final unloaded sag at 120°F (49°C). The calculation is a two step process in which the analyst first calculates the average field strength at 1.0 m (3.3 ft) above the ground beneath the minimum line clearance, and second calculates the steady-state current value. The design and construction of the CCNPP Unit 3 substation and transmission circuits would comply with this NESC provision. At a minimum, conductor clearances over the ground would equal or exceed 29 ft (8.8 m)

© 2007 UniStar Nuclear Services, LLC. All rights reserved.
COPYRIGHT PROTECTED

phase-to-ground over surfaces that could support a large truck or farm machinery, while clearance over railroad lines would equal or exceed 37 ft (11.3 m) phase-to-ground.

3.7.3 NOISE LEVELS

The noise impacts associated with the transmission system would be from three major sources: (1) corona from the transmission lines (a crackling or hissing noise); (2) operation of the substation transformers; and (3) maintenance work and vehicles.

3.7.3.1 Corona

Corona discharge is the electrical breakdown of air into charged particles caused by the electrical field at the surface of the conductors, and is increased by ambient weather conditions such as humidity, air density, wind, and precipitation and by irregularities on the energized surfaces. During wet conditions audible noise from the corona effect can exceed 50 dBA for a 500 kV line may range between 59 and 64 dBA. Corona noise for a 500 kV line has been estimated to be 59.3 dBA during a worst-case rain with heavy electrical loads (SCE, 2006). For reference, normal speech has a sound level of approximately 60 dB and a bulldozer idles at approximately 85 dB. The State of Maryland Environmental Noise Standard for industrial zoning districts is 75 dBA (MD, 2007).

As shown in Figure 3.7-2, the proposed CCNPP Unit 3 substation and transmission lines connecting the CCNPP Unit 3 substation and the existing CCNPP Units 1 and 2 substation would be constructed entirely on the CCNPP site. The new transmission lines would be approximately 1 mi (1.6 km) in length and located more than 3,500 ft (1,060 m) from the site boundary. The corona noise would be significantly reduced at the site boundary from approximately 60 dBA near the conductors.

3.7.3.2 Substation Noise

Substations include transformer banks and circuit breakers that create “hum,” normally around 60 dBA, and occasional instantaneous sounds in the range of 70 to 90 dBA during activation of circuit breakers (SCE, 2006). The proposed CCNPP Unit 3 substation would introduce these new noise sources (transformers and circuit breakers) to its location. The noise levels surrounding the substation would likely be close to 60 dBA near the substation fence, but would be significantly reduced near the site boundary, approximately 2,800 ft (850 m) to the south.

3.7.3.3 Maintenance Noise

Regular inspections and maintenance of the transmission system and right-of-ways are performed. A patrol is performed twice annually of all transmission corridors, while more comprehensive inspections are performed on a rotating 5 year schedule Maintenance is performed on an as-needed basis as dictated by the results of the line inspections and are generally performed on a 5 year rotating schedule for tree trimming. The noise levels for maintenance activities would typically be those associated with tree trimming, spraying, mowing and vehicle driving. Noise levels for maintenance in the new onsite corridor are expected to be similar to those currently generated by maintenance activities.

3.7.4 STRUCTURE DESIGN

The existing 500 kV transmission towers are designed and constructed to National Electric Safety Code and current CCNPP site standards. New towers added to support CCNPP Unit 3 will also conform to these criteria. The new towers will be steel tubular or lattice designs, and will provide minimum clearances in accordance with the aforementioned standards. The two circuits connecting the existing CCNPP Units 1 and 2 substation and the CCNPP Unit 3

© 2007 UniStar Nuclear Services, LLC. All rights reserved.
COPYRIGHT PROTECTED

substation would be carried on separate towers. All structures would be grounded with a combination of ground rods and a ring counterpoise system. None of the transmission structures would exceed a height of 200 ft (61 m) above ground surface; thus, Federal Aviation Administration permits would not be required.

3.7.5 INSPECTION AND MAINTENANCE

Regular inspections and maintenance of the transmission system and right-of-ways will be performed. These inspections and maintenance include patrols and maintenance of transmission line hardware on a periodic and as-needed basis. Vegetation maintenance may include tree trimming and application of herbicide. Maintenance of the proposed onsite corridors including vegetation management will be implemented under the Baltimore Gas and Electric Forestry Program in accordance with ANSI A300 (ANSI, 2001a) (ANSI, 2006b) standards to promote safety, reliability, and environmental benefit.

3.7.6 REFERENCES

ANSI/IEEE, applicable version. National Electric Safety Code, ANSI/IEEE C2, version in effect at time of design, American National Standards Institute/Institute of Electrical and Electronics Engineers.

ANSI, 2001a. Tree, Shrub, and Other Woody Plant Maintenance – Standard Practices (Pruning), ANSI-A300 (Part 1), American National Standards Institute, 2001.

ANSI, 2001b. Integrated Vegetation Management, ANSI-A300 (Part 7), American National Standards Institute, 2001.

BGE, 1970. Environmental Report, Calvert Cliffs Nuclear Power Plant, Baltimore Gas and Electric Company, November 1970.

BGE, 1998. Applicant's Environmental Report – Operating License Renewal Stage, Calvert Cliffs Nuclear Power Plant Units 1 and 2, Baltimore Gas and Electric Company, April 1998.

COMAR, 2007a. Annotated Code of Public General Laws of Maryland, Public Utility Company Article, Title 7, Subtitle 2, Electric Generation Planning, 2007.

COMAR, 2007b. Code of Maryland Regulation, Title 26, Subtitle 2, Chapter 3, Control of Noise Pollution, 2007.

MD, 2007. Code of Maryland Regulations, COMAR 26.02.03, Control of Noise Pollution, 2007.

NRC, 1999. Environmental Standard Review Plan, NUREG-1555, Nuclear Regulatory Commission, October 1999.

PJM, 2006. PJM Generator Interconnection Q48 Calvert Cliffs 1640 MW Feasibility Study, DMS #390187, PJM Interconnection LLC, October 2006.

SCE, 2006. Devers-Palo Verde 500 kV No. Project (Application No. A.05-04-015), Final Environmental Impact Report/ Environmental Impact Statement, State of California Public Utilities Commission, Southern California Edison, October 2006.

© 2007 UniStar Nuclear Services, LLC. All rights reserved.
COPYRIGHT PROTECTED

Figure 3.7-1—CCNPP Site 500 kV Circuit Corridors

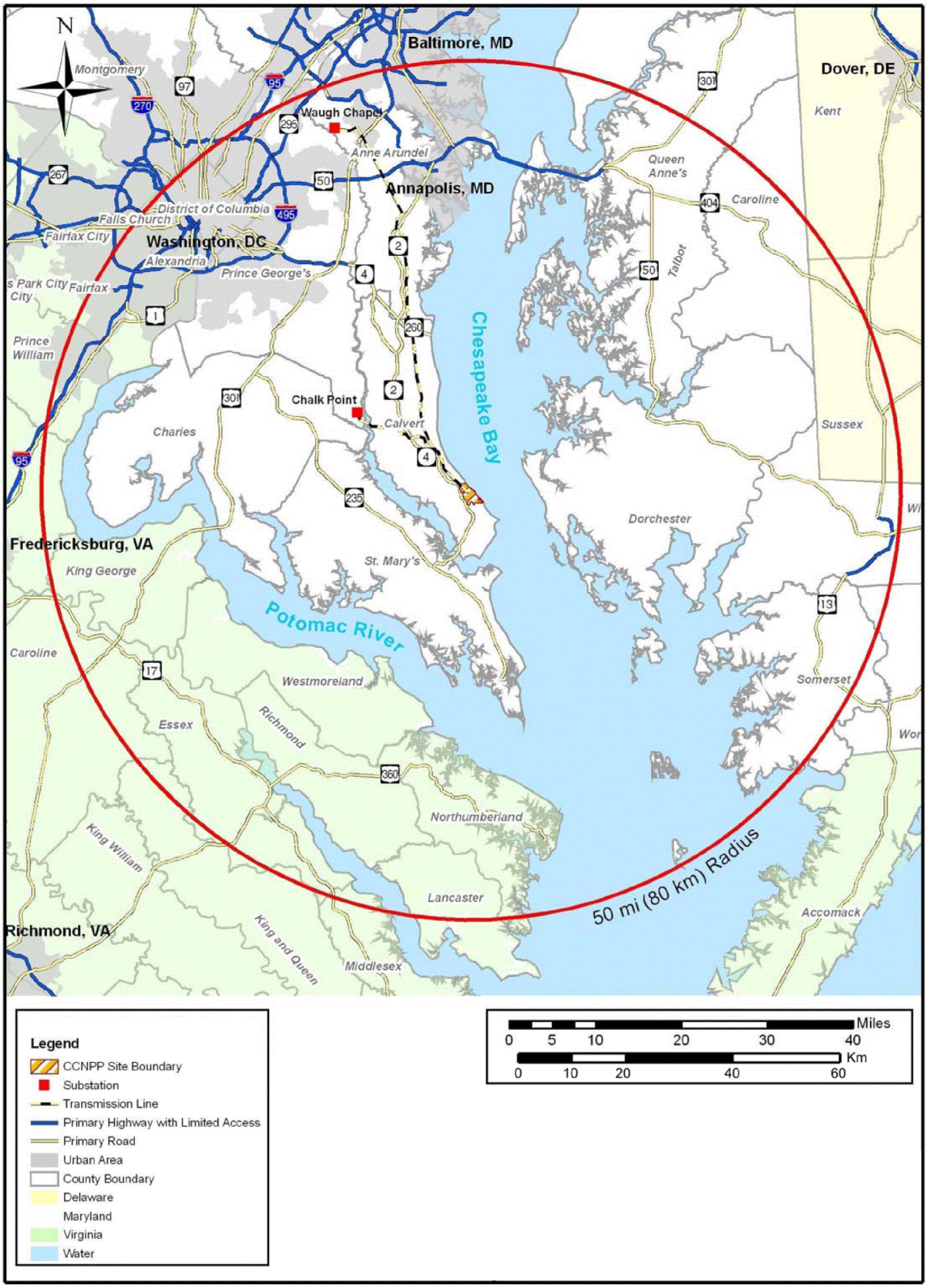

© 2007 UniStar Nuclear Services, LLC. All rights reserved.
COPYRIGHT PROTECTED

Figure 3.7-2—CCNPP Site Topography and Generalized Transmission Line Corridor

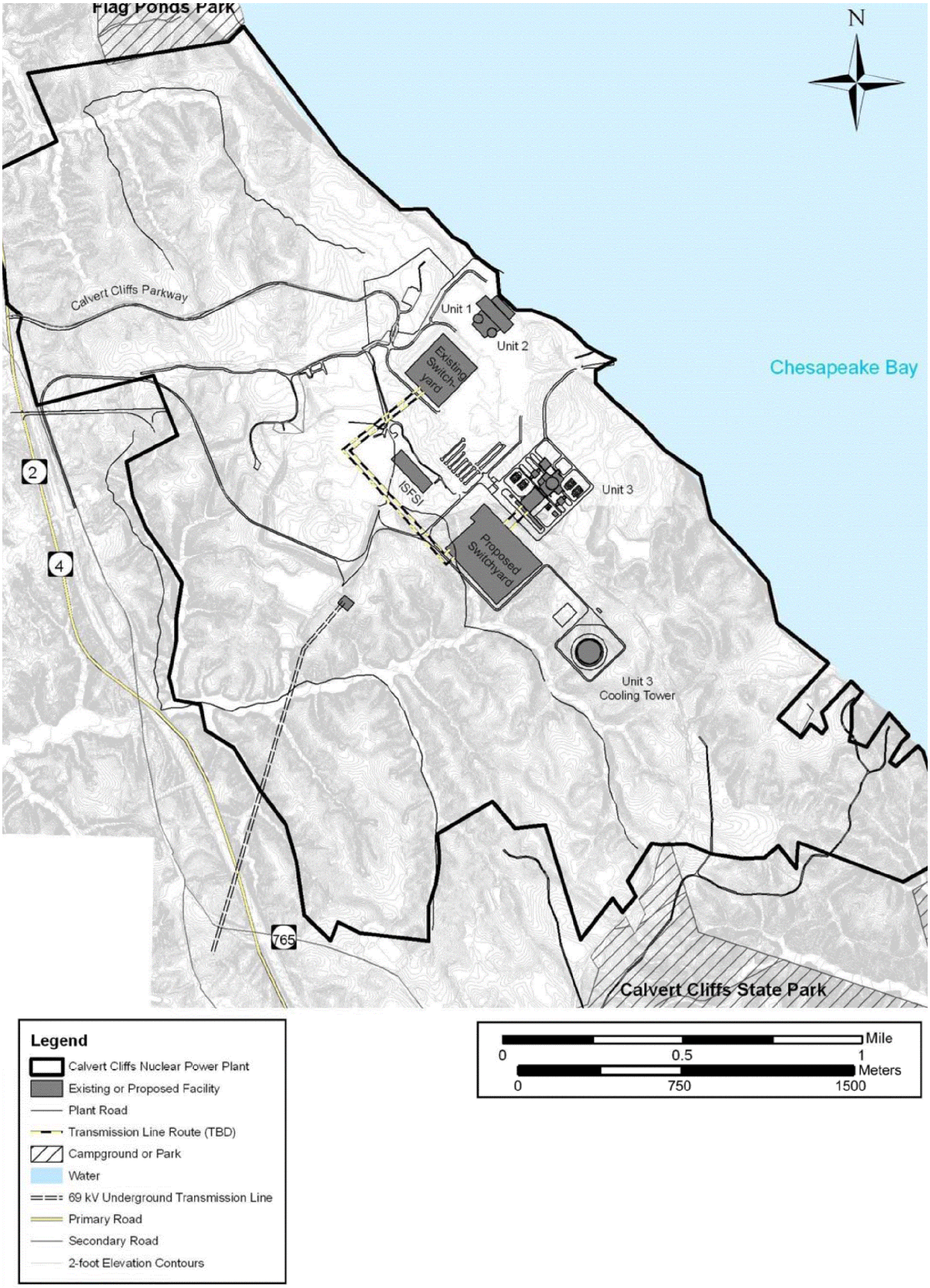

© 2007 UniStar Nuclear Services, LLC. All rights reserved.
COPYRIGHT PROTECTED

3.8 TRANSPORTATION OF RADIOACTIVE MATERIALS

3.8.1 REACTOR DATA

The reactor for CCNPP Unit 3 has a rated core thermal power of 4,590 (MWt). Although the U.S. EPR is to be licensed for 40 years, the proposed operating life of the U.S. EPR is 60 years.

The reactor core consists of 241 fuel assemblies. The fuel assembly structure supports the fuel rod bundles. Inside the assembly, the fuel rods are vertically arranged according to a square lattice with a 17x17 array. There are 265 fuel rods per assembly.

The fuel rods are composed of enriched uranium dioxide sintered pellets contained in a cladding tube made of M5® advanced zirconium alloy. The percentage of uranium enrichment and total quantities of uranium for the reactor core is as follows:

- Cycle 1 (initial) – average batch enrichment is between 2.23 to 3.14 weight percent U-235 and 2.66 weight percent U-235 for core reload with an enriched uranium weight of 285,483 lbs (129,493 kg).

- Cycle 2 (transition) – average batch enrichment is between 4.04 to 4.11 weight percent U-235 and 4.07 weight percent U-235 for core reload with an enriched uranium weight of 141,909 lbs (64,369 kg).

- Cycle 3 (transition) – average batch enrichment is between 4.22 to 4.62 weight percent U-235 and 4.34 weight percent U-235 for core reload with an enriched uranium weight of 113,395 lbs (51,435 kg).

- Cycle 4 (equilibrium) – average batch enrichment is between 4.05 to 4.58 weight percent U-235 and 4.30 weight percent U-235 for core reload with an enriched uranium weight of 113,417 lbs (51,445 kg).

Average batch enrichment is the average enrichment for each fuel assembly comprising a batch of fuel. The enrichment for core reload is the average enrichment for all fuel assemblies loaded in the core which is derived from the mass weighted average for the batches of fuel. The above values are 'beginning of life' enrichment values. Discharged enrichment values will be less at the 'end of life' of the assembly. Assembly enrichment reduction is directly proportional to the assembly burnup.

Discharge burnups for equilibrium cores are approximately between 45,000 and 59,000 MWd/MTU. The batch average discharge burnup for equilibrium cores is about 52,000 MWd/MTU.

3.8.2 ONSITE STORAGE FACILITIES FOR IRRADIATED FUEL

As discussed in Section 3.5.3, the spent fuel pool will be sized to accommodate at least 10 calendar years of wet storage, plus a full core offload. CCNPP Unit 3 will utilize a 5 year minimum decay period between removal from the reactor and transportation offsite, as required by the Department of Energy (DOE) and as prescribed under 10 CFR 961, Appendix E, (CFR, 2007c).

© 2007 UniStar Nuclear Services, LLC. All rights reserved.
COPYRIGHT PROTECTED

3.8.3 TREATMENT AND PACKAGING OF RADIOACTIVE MATERIALS OTHER THAN IRRADIATED FUEL

Solid low level waste (LLW) shipped offsite for processing and disposal include dry activated wastes (DAW), aqueous cartridge type filters, solidified evaporator concentrates, resin beads, irradiated hardware, and small amounts of mixed wastes. The waste streams, annual generated volumes, and shipments are summarized in Table 3.8-1.

The CCNPP Unit 3 waste-streams identified in Table 3.8-1 will be packaged in solid form in accordance with the requirements of 10 CFR 51.52(a)(4), 10 CFR 71, 49 CFR 173, and 49 CFR 178, (CFR 2007a, 2007b, 2007d, and 2007e), and as required for acceptance by the processor and disposal site's waste acceptance criteria.

3.8.4 TRANSPORTATION SYSTEM FOR FUEL AND OTHER RADIOACTIVE WASTES

Unirradiated fuel will be shipped to CCNPP Unit 3 by truck.

The DOE is responsible for irradiated fuel shipments from CCNPP Unit 3 to the repository. The DOE will make the decision regarding the mode of transport. It is anticipated that irradiated fuel will be shipped by truck, rail, or barge.

Radioactive waste from CCNPP Unit 3 will be shipped by truck or rail.

CCNPP Unit 3 will operate in accordance with carrier procedures and policies that comply with the requirements of 10 CFR 51.52(a)(4), 10 CFR 71, 49 CFR 173, and 49 CFR 178, (CFR 2007a, 2007b, 2007d, and 2007e). The procedures will be similar to those established for CCNPP Units 1 and 2.

3.8.5 TRANSPORTATION DISTANCE FROM THE PLANT TO THE STORAGE FACILITY

The detailed analysis of the transportation of fuel and wastes to and from the facility is provided in Sections 5.11 and 7.4. The discussion of the analysis includes the assumptions regarding the transportation distances to the appropriate storage facilities.

3.8.6 CONCLUSIONS

Table 3.8-2 compares the conditions in 10 CFR 51.52(a) (CFR, 2007a) with the design parameters for CCNPP Unit 3. As noted in Table 3.8-2, the design for CCNPP Unit 3 will not meet all of the conditions of 10 CFR 51.52(a) (CFR, 2007a). Therefore, the environmental impact from the transportation of fuel and wastes to and from the facility require detailed analyses as required in 10 CFR 51.52(b) (CFR, 2007a). Detailed analyses are presented in Sections 5.11 and 7.4.

3.8.7 REFERENCES

CFR, 2007a. Code of Federal Regulations, Title 10, 51.52, Environmental Effects of Transportation of Fuel and Waste – Table S-4, 2007.

CFR, 2007b. Code of Federal Regulations, Title 10, Part 71, Packaging and Transportation of Radioactive Material, 2007.

CFR, 2007c. Code of Federal Regulations, Title 10, Part 961, Standard Contract for Disposal of Spent Nuclear Fuel and/or High-Level Radioactive Waste, Appendix E, 2007.

© 2007 UniStar Nuclear Services, LLC. All rights reserved.
COPYRIGHT PROTECTED

CFR, 2007d. Code of Federal Regulations, Title 49, Part 173, Shippers – General Requirements for Shipments and Packagings, 2007.

CFR, 2007e. Code of Federal Regulations, Title 49, Part 178, Specifications for Packagings, 2007.

© 2007 UniStar Nuclear Services, LLC. All rights reserved.
COPYRIGHT PROTECTED

Table 3.8-1—Annual Solid Radioactive Wastes

Waste Type	Quantity ft³ (m³)	Activity Content (Ci)		Shipping Volume ft³ (m³)	
		Expected	Maximum	Expected	Maximum
Solid Waste Stored in Drums					
Evaporator Concentrates	710 (20.1)	1.50E+02 5.5E+12	9.12E+03 3.37E+14	Varies	140 (3.96)
Spent Resins (Other)	90 (2.55)	1.07E+03 3.96E+13	5.23E+04 1.93E+15	90 (2.55)	
Spent Resins (Radwaste Demineralizer System)	140 (3.96)	1.50E+02 5.5E+12	9.12E+03 3.37E+14	140 (3.96)	
Wet Waste from Demineralizer	8 (0.23)	1.50E+02 5.5E+12	9.12E+03 3.37E+14	8 (0.23)	
Waste Drum for Solids Collection from Centrifuge System of Liquid Waste Storage & Processing	8 (0.23)	1.50E+02 5.5E+12	9.12E+03 3.37E+14	Varies	8 (0.23)
Filters (quantity)	120	6.86E+02 2.54E+13		120 (3.40)	
Sludge	70 (1.98)	1.50E+02 5.5E+12	9.12E+03 3.37E+14	Varies	35 (0.99)
Total Solid Waste Stored in Drums	1,146 (32.5)	2.51E+03 9.29E+13	9.86E+04 3.65E+15	358 (10.1)	541 (15.3)
Mixed Waste					
Mixed Waste	2 (0.057)	0.04 1.48E+09	2.43 8.99E+10	2 (0.057)	
Dry Active Waste (DAW)					
Non-Compressible DAW	70 (1.98)	2.97E-01 1.09E+10	1.81E+01 6.97E+11	70 (1.98)	
Compressible DAW	1,415 (40.1)	6.01E+00 2.22E+13	3.66E+02 1.35E+13	707 (20.0)	
Combustible DAW	5,300 (150.1)	3.19E+01 1.18E+12	1.94E+03 7.18E+13	5,300 (150.1)	
Total Dry Active Waste	6,785 (192.1)	3.82E+01 1.43E+12	2.32E+03 8.58E+13	Varies	
Overall Totals	7,933 (224.6)	2.55E+03 9.43E+13	1.01E+05 3.74E+15	Varies	

Notes:

1. Activity contents represent waste activity after a defined period (i.e., 6 months) that covers onsite storage before shipping.
2. The volume of evaporator concentrates and sludge, and the number of waste drums will be determined by the method of treatment.

© 2007 UniStar Nuclear Services, LLC. All rights reserved.
COPYRIGHT PROTECTED

Table 3.8-2—Transportation Environmental Impact Comparison

10 CFR 51.52(a) Parameter	10 CFR 51.52(a) Condition	CCNPP Unit 3
(1)Reactor Power Level, MWt	3,800	4,590
(2)Fuel Form and U235 Enrichment, weight percent	Zircaloy encapsulated sintered uranium dioxide pellets at 4.0	M5® advanced zirconium alloy encapsulated sintered uranium dioxide pellets at 4.58
(3)Average Irradiation Level and Minimum Decay, MWd/MTU	33,000 at 90 days decay	52,000 at 5 years decay
(4)Radioactive Waste Physical Form	Packaged as Solid	Packaged as Solid
(5)Transport Mode	New Fuel: Truck Irradiated Fuel: Truck, Rail, Barge LLW: Truck, Rail	New Fuel: Truck Irradiated Fuel: Truck, Rail, Barge LLW: Truck, Rail
(6)Environmental Impacts	Table S-4 of 10 CFR 51.52	Refer to Sections 5.11 and 7.4

Note:
LLW – Low Level Waste

© 2007 UniStar Nuclear Services, LLC. All rights reserved.
COPYRIGHT PROTECTED