8.0 ELECTRIC POWER

This chapter of the U.S. EPR Final Safety Analysis Report (FSAR) is incorporated by reference with supplements as identified in the following sections.

© 2007 UniStar Nuclear Services, LLC. All rights reserved.
COPYRIGHT PROTECTED

8.1 INTRODUCTION

This section of the U.S. EPR FSAR is incorporated by reference with the following supplements.

8.1.1 OFFSITE POWER DESCRIPTION

The U.S. EPR FSAR includes the following COL Item in Section 8.1.1:

> A COL applicant that references the U.S. EPR design certification will provide site-specific information describing the interface between the offsite transmission system, and the nuclear unit, including switchyard interconnections.

This COL Item is addressed as follows:

{The existing transmission system consists of two circuits, one circuit connects the CCNPP site to the Waugh Chapel Substation in Anne Arundel County and one circuit connects the CCNPP site to the Mirant Corporation Chalk Point Generating Station in Prince George's County. The circuit from CCNPP to Waugh Chapel is composed of two separate three-phase 500 kV transmission lines (circuits 5051 and 5052) run on a single right-of-way from the CCNPP site, while the circuit from CCNPP to Chalk Point is a single three-phase 500 kV transmission line (circuit 5072). The routes for the existing two 500 kV transmission lines from the CCNPP site to the Waugh Chapel Substation and single 500 kV transmission line from the CCNPP site to the Chalk Point Generating Station are presented in Figure 8.1-1.

The CCNPP Unit 3 switchyard is integrally connected to the existing CCNPP Units 1 and 2 500 kV switchyard by two 500 kV, 3500 MVA lines on individual towers (circuits 5056 and 5057). At the existing CCNPP Unit 1 and 2 switchyard, the two line positions previously used for 500 kV transmission circuits 5052 (Calvert Cliffs-Waugh Chapel) and 5072 (Calvert Cliffs-Chalk Point) are upgraded and extended to provide two transmission lines from the transmission system to the CCNPP Unit 3 switchyard, with circuit 5051 to Waugh Chapel providing the connection from the transmission system to the CCNPP Units 1 and 2 switchyard.

The CCNPP Unit 3 is connected to CCNPP Unit 3 switchyard by means of six overhead lines.}

The interface between the transmission system and the nuclear unit is further described in Section 8.2.

8.1.2 ONSITE POWER SYSTEM DESCRIPTION

No departures or supplements.

8.1.3 SAFETY-RELATED LOADS

The U.S. EPR FSAR includes the following COL Item in Section 8.1.3:

> A COL applicant that references the U.S. EPR design certification will identify site-specific loading differences that raise the EDG or Class 1E battery loading and demonstrate the electrical distribution system is adequately sized for the additional load.

This COL Item is addressed as follows:

{The loads powered from the safety-related sources for the U.S. EPR are specified in U.S. EPR FSAR Tables 8.3-4, 8.3-5, 8.3-6, and 8.3-7. Additional site-specific loads powered from the station EDGs are specified in Tables 8.1-1, 8.1-2, 8.1-3, and 8.1-4. This information supplements

© 2007 UniStar Nuclear Services, LLC. All rights reserved.
COPYRIGHT PROTECTED

U.S. EPR FSAR Tables 8.3-4, 8.3-5, 8.3-6, and 8.3-7. The site-specific loads are within the design margin of the EDGs.

Onsite DC power system nominal load values are specified in U.S. EPR FSAR Tables 8.3-12 through 8.3-15. Additional site-specific loads powered from the Class 1E battery source include breakers on the 31/2/3/4BDD bus that provide electrical power to the 6.9 kV to 480 V transformers for the UHS Makeup Water System. The feeder breakers require steady state control power of 0.04 kW as listed in the Class 1E Uninterruptible Power Supply (EUPS) Battery Sizing Calculation. The site-specific Class 1E control power demand is within the design margin of the EUPS Battery Sizing Calculation and does not change the DC load requirements specified in U.S. EPR FSAR Tables 8.3-12 through 8.3-15.}

8.1.4 DESIGN BASES

8.1.4.1 Offsite Power System

No departures or supplements.

8.1.4.2 Onsite Power System

No departures or supplements.

8.1.4.3 Criteria, Regulatory Guides, Standards, and Technical Positions

No departures or supplements.

8.1.4.4 NRC Generic Letters

The information requested by the NRC in Generic Letter 2006-02 (NRC, 2006), as indicated in U.S. EPR FSAR Section 8.2.1.1, is presented in Section 8.2.1.1.

8.1.5 REFERENCES

{**NRC, 2006.** Grid Reliability and the Impact on Plant Risk and Operability of Offsite Power, NRC Generic Letter 2006-02, U.S. Nuclear Regulatory Commission, February 2006.}

© 2007 UniStar Nuclear Services, LLC. All rights reserved.
COPYRIGHT PROTECTED

Table 8.1-1— {Division 1 Emergency Diesel Generator Nominal Loads}

Time Sequence (sec)	Load Description	Volts	Rating (hp/kW)	Operating Load LOOP (kW)	Operating Load DBA/LOOP (kW)
Load Step Group 1 (Note 1)					
15 (Note 2)	Cooling Fans for UHS Makeup Water Intake Structure and UHS Electrical Building (1 for mechanical division and 1 for electrical division, 5 hp each)	480	10 hp	8.3	8.3
15 (Note 2)	Heating Fans for UHS Makeup Water Intake Structure and UHS Electrical Building (1 for mechanical division and 1 for electrical division, 5 hp each)	480	10 hp	0	0
15 (Note 3)	Sump Pumps for UHS Makeup Water Intake Structure and UHS Electrical Building (1 for mechanical division and 1 for electrical division, 10 hp each)	480	20 hp	0	0
15 (Note 2)	Unit Heaters for UHS Makeup Water Intake Structure and UHS Electrical Building (1 for mechanical division and 1 for electrical division, 5 kW each)	480	10 kW	0	0
15 (Note 3)	UHS Makeup Water Isolation MOV	480	2 hp	0	0
15 (Note 3)	UHS Makeup Water Mini Flow Bypass MOV	480	2 hp	0	0
15 (Note 3)	UHS Makeup Water Strainer MOVs (2 MOVs, 2 hp each)	480	4 hp	0	0
15 (Note 4)	Estimated Cable Losses		2 kW	2	2
15 (Note 4)	UHS Makeup Water System Transformer Losses and MCC equipment losses		7 kW	7	7
15	Allowance for future small loads		5 kW	5	5
Subtotal of Additional Loads for Load Step Group 1				**22.3**	**22.3**
Additional Manually Connected Loads					
N/A (Note 5)	UHS Makeup Water Pumps 30PED10AP001	480	50 hp	0	0
Total of Additional Manually Connected Loads				**0**	**0**

Notes:

1. Power to the UHS Makeup Water Intake Structure and UHS Electrical Building is available from the 31BDD buses during the EDG Loading Sequence Step 1.

2. Cooling systems are assumed to be operating and heating systems are off.

3. Loads seldom function and are not credited towards EDG loading.

4. Estimated Losses.

5. UHS Makeup Water Pumps are not required to run during the first 72 hours of a DBE.

© 2007 UniStar Nuclear Services, LLC. All rights reserved.
COPYRIGHT PROTECTED

Table 8.1-2— {Division 2 Emergency Diesel Generator Nominal Loads}

Time Sequence (sec)	Load Description	Volts	Rating (hp/kW)	Operating Load LOOP (kW))	Operating Load DBA/LOOP (kW)
Load Step Group 1 (Note 1)					
15 (Note 2)	Cooling Fans for UHS Makeup Water Intake Structure and UHS Electrical Building (1 for mechanical division and 1 for electrical division, 5 hp each)	480	10 hp	8.3	8.3
15 (Note 2)	Heating Fans for UHS Makeup Water Intake Structure and UHS Electrical Building (1 for mechanical division and 1 for electrical division, 5 hp each)	480	10 hp	0	0
15 (Note 3)	Sump Pumps for UHS Makeup Water Intake Structure and UHS Electrical Building (1 for mechanical division and 1 for electrical division, 10 hp each)	480	20 hp	0	0
15 (Note 2)	Unit Heaters for UHS Makeup Water Intake Structure and UHS Electrical Building (1 for mechanical division and 1 for electrical division, 5 kW each)	480	10 kW	0	0
15 (Note 3)	UHS Makeup Water Isolation MOV	480	2 hp	0	0
15 (Note 3)	UHS Makeup Water Mini Flow Bypass MOV	480	2 hp	0	0
15 (Note 3)	UHS Makeup Water Strainer MOVs (2 MOVs, 2 hp each)	480	4 hp	0	0
15 (Note 4)	Estimated Cable Losses		2 kW	2	2
15 (Note 4)	UHS Makeup Water System Transformer Losses and MCC equipment losses		7 kW	7	7
15	Allowance for future small loads		5 kW	5	5
Subtotal of Additional Loads for Load Step Group 1				**22.3**	**22.3**
Additional Manually Connected Loads					
N/A (Note 5)	UHS Makeup Water Pumps 30PED20AP001	480	50 hp	0	0
Total of Additional Manually Connected Loads				**0**	**0**

Notes:

1. Power to the UHS Makeup Water Intake Structure and UHS Electrical Building is available from the 32BDD buses during the EDG Loading Sequence Step 1.

2. Cooling systems are assumed to be operating and heating systems are off.

3. Loads seldom function and are not credited towards EDG loading.

4. Estimated Losses.

5. UHS Makeup Water Pumps are not required to run during the first 72 hours of a DBE.

© 2007 UniStar Nuclear Services, LLC. All rights reserved.
COPYRIGHT PROTECTED

Table 8.1-3— {Division 3 Emergency Diesel Generator Nominal Loads}

Time Sequence (sec)	Load Description	Volts	Rating (hp/kW)	Operating Load LOOP (kW)	Operating Load DBA/LOOP (kW)
Load Step Group 1 (Note 1)					
15 (Note 2)	Cooling Fans for UHS Makeup Water Intake Structure and UHS Electrical Building (1 for mechanical division and 1 for electrical division, 5 hp each)	480	10 hp	8.3	8.3
15 (Note 2)	Heating Fans for UHS Makeup Water Intake Structure and UHS Electrical Building (1 for mechanical division and 1 for electrical division, 5 hp each)	480	10 hp	0	0
15 (Note 3)	Sump Pumps for UHS Makeup Water Intake Structure and UHS Electrical Building (1 for mechanical division and 1 for electrical division, 10 hp each)	480	20 hp	0	0
15 (Note 2)	Unit Heaters for UHS Makeup Water Intake Structure and UHS Electrical Building (1 for mechanical division and 1 for electrical division, 5 kW each)	480	10 kW	0	0
15 (Note 3)	UHS Makeup Water Isolation MOV	480	2 hp	0	0
15 (Note 3)	UHS Makeup Water Mini Flow Bypass MOV	480	2 hp	0	0
15 (Note 3)	UHS Makeup Water Strainer MOVs (2 MOVs, 2 hp each)	480	4 hp	0	0
15 (Note 4)	Estimated Cable Losses		2 kW	2	2
15 (Note 4)	UHS Makeup Water System Transformer Losses and MCC equipment losses		7 kW	7	7
15	Allowance for future small loads		5 kW	5	5
Subtotal of Additional Loads for Load Step Group 1				**22.3**	**22.3**
Additional Manually Connected Loads					
N/A (Note 5)	UHS Makeup Water Pumps 30PED30AP001	480	50 hp	0	0
Total of Additional Manually Connected Loads				**0**	**0**

Notes:

1. Power to the UHS Makeup Water Intake Structure and UHS Electrical Building is available from the 33BDD buses during the EDG Loading Sequence Step 1.

2. Cooling systems are assumed to be operating and heating systems are off.

3. Loads seldom function and are not credited towards EDG loading.

4. Estimated Losses.

5. UHS Makeup Water Pumps are not required to run during the first 72 hours of a DBE.

© 2007 UniStar Nuclear Services, LLC. All rights reserved.
COPYRIGHT PROTECTED

Table 8.1-4— {Division 4 Emergency Diesel Generator Nominal Loads}

Time Sequence (sec)	Load Description	Volts	Rating (hp/kW)	Operating Load LOOP (kW)	Operating Load DBA/LOOP (kW)
Load Step Group 1 (Note 1)					
15 (Note 2)	Cooling Fans for UHS Makeup Water Intake Structure and UHS Electrical Building (1 for mechanical division and 1 for electrical division, 5 hp each)	480	10 hp	8.3	8.3
15 (Note 2)	Heating Fans for UHS Makeup Water Intake Structure and UHS Electrical Building (1 for mechanical division and 1 for electrical division, 5 hp each)	480	10 hp	0	0
15 (Note 3)	Sump Pumps for UHS Makeup Water Intake Structure and UHS Electrical Building (1 for mechanical division and 1 for electrical division, 10 hp each)	480	20 hp	0	0
15 (Note 2)	Unit Heaters for UHS Makeup Water Intake Structure and UHS Electrical Building (1 for mechanical division and 1 for electrical division, 5 kW each)	480	10 kW	0	0
15 (Note 3)	UHS Makeup Water Isolation MOV	480	2 hp	0	0
15 (Note 3)	UHS Makeup Water Mini Flow Bypass MOV	480	2 hp	0	0
15 (Note 3)	UHS Makeup Water Strainer MOVs (2 MOVs, 2 hp each)	480	4 hp	0	0
15 (Note 4)	Estimated Cable Losses		2 kW	2	2
15 (Note 4)	UHS Makeup Water System Transformer Losses and MCC equipment losses		7 kW	7	7
15	Allowance for future small loads		5 kW	5	5
Subtotal of Additional Loads for Load Step Group 1				**22.3**	**22.3**
Additional Manually Connected Loads					
N/A (Note 5)	UHS Makeup Water Pumps 30PED40AP001	480	50 hp	0	0
Total of Additional Manually Connected Loads				**0**	**0**

Notes:

1. Power to the UHS Makeup Water Intake Structure and UHS Electrical Building is available from the 34BDD buses during the EDG Loading Sequence Step 1.

2. Cooling systems are assumed to be operating and heating systems are off.

3. Loads seldom function and are not credited towards EDG loading.

4. Estimated Losses.

5. UHS Makeup Water Pumps are not required to run during the first 72 hours of a DBE.

© 2007 UniStar Nuclear Services, LLC. All rights reserved.
COPYRIGHT PROTECTED

Figure 8.1-1—{CCNPP Site 500 kV Circuit Corridors}

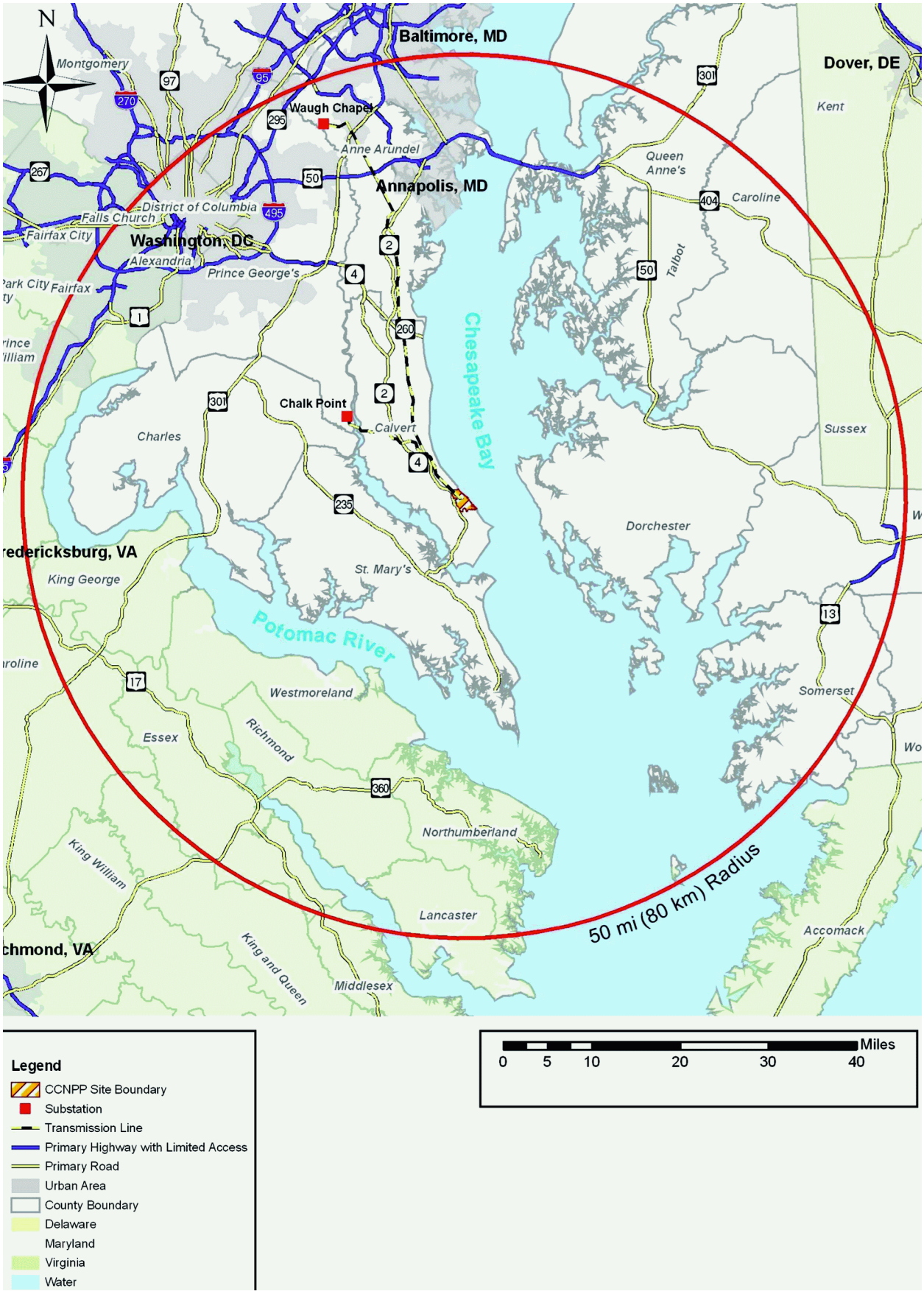

© 2007 UniStar Nuclear Services, LLC. All rights reserved.
COPYRIGHT PROTECTED

8.2 OFFSITE POWER SYSTEM

This section of the U.S. EPR FSAR is incorporated by reference with the following supplements.

8.2.1 DESCRIPTION

8.2.1.1 Offsite Power

The U.S. EPR FSAR includes the following COL Item in Section 8.2.1.1:

> A COL applicant that references the U.S. EPR design certification will provide site-specific information regarding the offsite transmission system and connections to the station switchyard.

This COL Item is addressed as follows:

{The new CCNPP Unit 3 switchyard is connected to CCNPP Unit 3 by means of six overhead lines.

- One line connects to the plant main transformer and is used for power export to the transmission system.
- Five lines connect to the auxiliary transformers. (Two emergency auxiliary transformers (EATs) and three normal auxiliary transformers (NATs).)

In addition, four normally energized, physically independent transmission lines, designed and located to minimize the likelihood of their simultaneous failure under operating, postulated accident, and postulated adverse environmental conditions, including transmission line tower failure or transmission line breaking; connect the CCNPP Unit 3 switchyard to the transmission system:

- Two new 1 mi (1.6 km) long overhead 500 kV transmission lines (circuits 5056 and 5057) connect the new CCNPP Unit 3 switchyard to the existing CCNPP Units 1 and 2 switchyard. One existing overhead 500 kV transmission line (circuit 5051) connects the CCNPP Units 1 and 2 switchyard directly to the transmission system.
- Two new overhead 500 kV transmission line extensions (to transmission circuits 5052 and 5072) have been provided to connect the CCNPP Unit 3 switchyard to existing transmission system lines.

Design details of the existing three transmission lines (circuits 5051, 5052, and 5072) that connect the CCNPP site to the Baltimore Gas and Electric (BGE) transmission system are shown in Table 8.2-1. Figure 8.2-1 depicts the 500 kV transmission configuration.

At least two of the overhead 500 kV transmission lines provide the two preferred sources of power for the reactor protection system and engineered safety features (ESFs) during normal, abnormal, and accident conditions.

CCNPP Unit 3 transmission lines utilize the existing (from CCNPP Units 1 and 2) corridor and rights-of-way for interconnects to the existing offsite power transmission grid. The three circuits are supported on separate structures. The separation between circuit 5051 and circuit 5052 is 200 ft (60 m). The separation between circuit 5052 and circuit 5072 is 150 ft (46 m). Circuit 5072 continues on to Chalk Point and circuits 5051 and 5052 continue to Waugh Chapel.

© 2007 UniStar Nuclear Services, LLC. All rights reserved.
COPYRIGHT PROTECTED

Approximately 3 mi (5 km) of circuit 5072 utilize the existing 500 kV line that was previously modified to avoid any crossings of the 500 kV lines.

The transmission system consists of two circuits. One circuit consists of two separate three-phase 500 kV transmission lines (single right-of-way) from the CCNPP site to the Waugh Chapel Substation in Anne Arundel County. The other circuit is a single line circuit from the CCNPP site routed northwestward to the Potomac Electric Power Company (PEPCO) Chalk Point Generating Station. Approximately 22 mi (35 km) of the lines in the CCNPP to Waugh Chapel circuit are in Calvert County and approximately 25 mi (40 km) are in Anne Arundel County in a 350 ft to 400 ft (100 m to 120 m) wide right-of-way. These lines were constructed to deliver power generated at CCNPP to the Waugh Chapel Substation, located at a point near BGE's load center. The other circuit, the single 500 kV line from CCNPP to Chalk Point, is 18 mi (29 km) in length. This circuit parallels the Waugh Chapel lines from CCNPP north approximately 9 mi (14 km) before diverging in a northwesterly direction to connect with a line at the PEPCO Chalk Point generating station Figure 8.1-1 shows these circuits.}

The U.S. EPR FSAR includes the following COL Item in Section 8.2.1.1:

> A COL applicant that references the U.S. EPR design certification will provide site-specific information regarding the communication agreements and protocols between the station and the transmission system operator, independent system operator, or reliability coordinator and authority. Additionally, the applicant will provide a description of the analysis tool used by the transmission operator to determine, in real time, the impact that the loss or unavailability of various transmission system elements will have on the condition of the transmission system to provide post-trip voltages at the switchyard. The information provided will be consistent with information requested in NRC generic letter 2006-02.

This COL Item is addressed as follows:

{The CCNPP site lies within the service area of Southern Maryland Electric Cooperative (SMECO). However, the plant will utilize transmission facilities that are owned and operated by Baltimore Gas and Electric (BGE) under the direction and control of the PJM Interconnection. BGE and the CCNPP Unit 3 operator have formal agreements and protocols in place to provide safe and reliable operation of the transmission system and equipment at CCNPP Unit 3.

Initial planning for the addition of a large generating unit such as CCNPP Unit 3 requires completion of the PJM Generator and Transmission Interconnection Planning Process. Studies performed as part of this process identify transmission system modifications to accommodate the generating unit (combined turbine-generator-exciter) and the main step-up transformer(s) including modifications to substations and switchyards.

The reliability of the PJM system is continuously (real time) analyzed through PJM's Energy Management System) EMS program, PJM is in the process of testing a program to model (in real time) the stability of the grid. The program is expected to be utilized prior to the unit coming on line.

BGE continuously monitors and evaluates grid reliability and switchyard voltages, and informs CCNPP Unit 3 of any grid instability or voltage inadequacies. They also work to maintain local voltage requirements as required by the nuclear plant. CCNPP Unit 3 reviews the transmission system parameters and informs BGE immediately prior to initiating any plant activities that may

© 2007 UniStar Nuclear Services, LLC. All rights reserved.
COPYRIGHT PROTECTED

affect grid reliability. In addition, plant operators inform BGE of changes in generation ramp rates and notify them of any developing problems that may impact generation.

The formal agreement between CCNPP Unit 3 and BGE will establish the requirements for transmission system studies and analyses. BGE performs short-term grid analyses to support CCNPP Unit 3 plant startup and normal shutdown. Long-term grid studies are performed and coordinated with CCNPP Unit 3. Studies of future load growth and new generation additions are performed in accordance with North American Electric Reliability Corporation (NERC) and PJM standards. Future transmission system improvements resulting from these studies are planned in support of CCNPP Unit 3.

The agreement between BGE and CCNPP Unit 3 demonstrates protocols in place for the plant to remain cognizant of grid vulnerabilities to make informed decisions regarding maintenance activities critical to the electrical system. During plant operation, BGE continuously monitors real-time power flows and assesses contingency impacts through use of a state-estimator tool. Operational planning studies are also performed using offline power flow study tools to assess near term operating conditions under varying load, generation, and transmission topology patterns.}

8.2.1.2 Station Switchyard

The U.S. EPR FSAR includes the following COL Item in Section 8.2.1.2:

> A COL applicant that references the U.S. EPR design certification will provide site-specific information for the switchyard layout design.

This COL Item is addressed as follows:

{The new 500 kV air insulated switchyard for CCNPP Unit 3 has been designed and is sized and configured to accommodate the output of CCNPP Unit 3. The location of this switchyard is on the CCNPP site approximately 300 ft (91 m) west of CCNPP Unit 3 and 600 ft (183 m) to the west and 2,500 ft (762 m) south of the existing CCNPP Units 1 and 2 500 kV switchyard. The two 500 kV switchyards are interconnected by overhead lines and transmit electrical power output from CCNPP Unit 3 to the BGE transmission system. The CCNPP Unit 3 switchyard layout and location are shown on Figure 8.2-1.

A single line of the CCNPP Unit 3 switchyard layout design, which incorporates a breaker-and-a-half scheme, is presented in Figure 8.2-2. Circuit breakers and disconnect switches are sized and designed in accordance with IEEE Standard C37.06 (IEEE, 2000). All circuit breakers are equipped with dual trip coils. The 500 kV circuit breakers in the switchyard are rated according to the following criteria:

- Circuit breaker continuous current ratings are chosen such that no single contingency in the switchyard (e.g., a breaker being out for maintenance) will result in a load exceeding 100% of the nameplate continuous current rating of the breaker.
- Interrupting duties are specified such that no fault occurring on the system, operating in steady-state conditions will exceed the breaker's nameplate interrupting capability.
- Momentary ratings are specified such that no fault occurring on the system, operating in steady-state conditions will exceed the breaker's nameplate momentary rating.

© 2007 UniStar Nuclear Services, LLC. All rights reserved.
COPYRIGHT PROTECTED

- Voltage ratings are specified to be greater than the maximum expected operating voltage.

The design of the CCNPP Unit 3 switchyard includes seven bays in the configuration. The breaker-and-a-half switchyard arrangement offers the operating flexibility to maintain the anticipated operational containment integrity and other vital functions in the event of a postulated accident as described in the Failure Modes and Effects Analysis (FMEA) as described in Section 8.2.2.4 and U.S. EPR FSAR Section 8.2.2.4. Advantages of the breaker-and-a-half switchyard arrangement include:

- Any transmission line into the switchyard can be cleared either under normal or fault conditions without affecting any other transmission line or bus.
- Either bus can be cleared under normal or fault conditions without interruption of any transmission line or the other bus.
- Any circuit breaker can be isolated for maintenance or inspection without interruption of any transmission line or bus.
- A fault in a tie breaker or failure of the breaker to trip for a line or generator fault results only in the loss of its two adjacent circuits until it can be isolated by disconnect switches.
- A fault in a bus side breaker or failure of the breaker to trip for a line or generator fault results only in the loss of the adjacent circuits and the adjacent bus until it can be isolated by disconnect switches.}

The U.S. EPR FSAR includes the following COL Item in Section 8.2.1.2:

> A COL applicant that references the U.S. EPR design certification will provide site-specific information regarding indication and control of switchyard components.

This COL Item is addressed as follows:

{A control house is located within the switchyard to support control and protection requirements. Control power for switchyard breakers required to connect or disconnect any components of CCNPP Unit 3 from the transmission system is provided by the switchyard batteries. There is a dual set of batteries located inside the switchyard control house. Switchyard breakers operate to clear a fault on any auxiliary transformer and for system faults such as bus differential or breaker failure. A switchyard DC system undervoltage condition is alarmed in the main control room.

Administrative control of the switchyard breakers is shared between CCNPP Unit 3 and BGE. The circuit breakers are controlled remotely from the plant control room or by the system load dispatcher. Local tripping control is also provided at the circuit breakers. Disconnect switches are provided to individually isolate each circuit breaker from the switchyard bus and associated lines. This permits individual breaker maintenance and testing to proceed while the switchyard and lines remain energized.}

© 2007 UniStar Nuclear Services, LLC. All rights reserved.
COPYRIGHT PROTECTED

The U.S. EPR FSAR includes the following COL Item in Section 8.2.1.2:

> A COL applicant that references the U.S. EPR design certification will provide site-specific information for the protective devices that control the switchyard breakers and other switchyard relay devices.

This COL Item is addressed as follows:

{Electrical protection of circuits from the CCNPP Unit 3 switchyard is provided by a primary and secondary relaying scheme. The current input for the protective relaying schemes comes from separate sets of circuit breaker bushing current transformers. Also, the control power for all primary and secondary relaying schemes is supplied from separate switchyard 125 VDC battery systems. These schemes are used for the following:

- The scheme is used on each of the four 500 kV transmission circuits from the CCNPP Unit 3 500 kV switchyard to the BGE grid. The potential input for the primary and secondary transmission circuit relaying systems is supplied from fused branch circuits originating from a set of coupling capacitor potential devices connected to the associated transmission circuit.

- The switchyard buses use a primary and backup scheme. The zone of protection of each 500 kV bus includes all the 500 kV circuit breakers adjacent to the protected bus.

- Line protection for the Main Step-Up (MSU) transformer and auxiliary transformers use primary and backup schemes.

In addition to the above described relaying systems, each of the 500 kV circuit breakers has an associated circuit breaker failure relaying system. A circuit breaker failure scheme is provided in the unlikely event a circuit breaker fails to trip. If a breaker fails to open coincident with a line fault, tripping of all breakers adjacent to the failed breaker will occur. If the failed breaker is the center breaker, then only the remaining bus breaker will trip resulting in the undesired loss of the other line in the bay. If the failed breaker is a bus breaker then all breakers connected to the same bus will be tripped which may or may not result in loss of other lines. Assuming all bus and center breakers are normally closed, the remaining bus will continue to supply all line elements

For the two 125 VDC batteries located in the CCNPP Unit 3 500 kV switchyard control house, each battery has its own battery charger. Each battery charger is connected to separate 480 VAC distribution panel boards also located in the control house. The switchyard 125 VDC battery systems are independent of the CCNPP Unit 3 non-Class 1E and Class 1E battery systems.}

8.2.1.3 Transformer Area

No departures or supplements.

8.2.2 ANALYSIS

No departures or supplements.

8.2.2.1 Compliance with GDC 2

No departures or supplements.

© 2007 UniStar Nuclear Services, LLC. All rights reserved.
COPYRIGHT PROTECTED

8.2.2.2 Compliance with GDC 4

No departures or supplements.

8.2.2.3 Compliance with GDC 5

No departures or supplements.

8.2.2.4 Compliance with GDC 17

The U.S. EPR FSAR includes the following COL Item in Section 8.2.2.4:

> A COL applicant that references the U.S. EPR design certification will provide a site-specific grid stability analysis. The results of the analysis will demonstrate that:
>
> - The PPS is not degraded below a level that will activate EPSS degraded grid protection actions after any of the following single contingencies:
> - U.S. EPR turbine generator trip.
> - Loss of the largest unit supplying the grid.
> - Loss of the largest transmission circuit or inter-tie.
> - Loss of the largest load on the grid.
> - The transmission system will not subject the reactor coolant pumps to a sustained frequency decay of greater than 3.5 Hz/sec as bounded by the decrease in reactor coolant system flow rate transient and accident analysis described in Section 15.3.2.

This COL Item is addressed as follows:

{A system impact study (PJM, 2007) was performed that analyzed load flow, transient stability and fault analysis for the addition of CCNPP Unit 3 as part of the PJM Interconnection Generator and Transmission Interconnection Planning Process. The study was prepared using PJM's reliability planning process against the 2011 summer loading and identified the system upgrades necessary to maintain the reliability of the transmission system. The criteria are based upon PJM planning procedures, NERC Planning Standards, and Reliability First Regional Reliability Council planning criteria. All previous active queues are modeled in the study. For the short circuit analysis, all units are modeled as operating. For the load flow analysis, peak loading is utilized with the largest generating unit tripped. For the stability analysis, light loading (50% of peak loading) is utilized with maximum generation. These cases are re-run every time a new queue is placed in the system.

The computer analysis was performed using the Siemens Power Technology International Software PSS/E. The analysis examined conditions involving loss of the largest generating unit, loss of the most critical transmission line, and multiple facility contingencies. The study also examined the import / export power flows between utilities. The model used in the analysis was based on the Eastern Interconnect power grid, with PJM system contingencies.

The results of the study conclude that with the additional generating capacity of CCNPP Unit 3, the transmission system remains stable under the analyzed conditions, preserving the grid connection, and supporting the normal and shutdown requirements of CCNPP Unit 3. During certain maintenance outages the output of the unit will need to be limited due to instability.

© 2007 UniStar Nuclear Services, LLC. All rights reserved.
COPYRIGHT PROTECTED

The most restrictive output limitation is during an outage on the 500 kV Waugh Chapel to Brighton line which limits the plant to approximately 85% output.

The study determined that modifications to the existing substations will be required. Thirteen breakers at the Oak Grove substation and twenty three breakers at the Chalk Point substation will need to be replaced with 63 kA and 80 kA breakers, respectively. Six breakers at the existing Calvert Cliff substation will need to be upgraded. At the Waugh Chapel substation, a transmission line will have to be relocated to a bay with two new breakers. These modifications shall be completed prior to initial fuel loading.

A system voltage study (PJM, 2008) was performed to determine the maximum and minimum voltage that the switchyard can maintain without any reactive support from CCNPP Unit 3. This study was prepared using the same reliability planning criteria as was used on the impact study.

The computer analysis was performed using the Siemens PSS/E Software. The load flow analysis included the station service loads and multiple facility contingencies.

The results of the study conclude that the new Calvert Cliffs substation 500 kV bus will operate within an acceptable voltage range to satisfy PJM Planning Reliability Criteria for pre-contingency conditions (500 – 550 kV) and post contingency conditions (5% max. voltage drop) with CCNPP Unit 3 at zero reactive power output. During periods of instability, or analyzed switchyard voltages lower than the allowed limit, the transmission operator will notify CCNPP Unit 3. The PJM dispatcher can request synchronous condensers and switchable capacitors to be placed in service, have operating generators supply maximum MVAR or if needed manual load dump can be initiated.

The U.S. EPR FSAR states that the plant will operate with a transmission system operating voltage range of $\pm$10%. However, based on the above site specific voltage study CCNPP Unit 3 may be designed to operate with a -5%, +10% transmission system operating voltage range.

Based on the results of the impact study the grid will not be lost due to the loss of the largest generating unit (i.e., CCNPP Unit 3) or the loss of the most critical transmission line or the loss of the largest load on the grid. The design (i.e., tap range & bus regulation voltage setting) of the on-load tap changers for each EAT will ensure that the downstream EPSS 6.9kV buses will have sufficient voltage to preclude the degraded voltage protection scheme from separating the buses from the preferred power source as described in Section 8.3.1.1.3. A site specific system calculation will be performed to confirm the design. See Chapter 16, Technical Specifications, Section 3.3.1, for specific degraded grid voltage protection settings.

The reliability of the overall system design is indicated by the fact that there have been no widespread system interruptions. Failure rates of individual facilities are low. As viewed from the CCNPP switchyard, the BGE transmission grid has been available for the entire time period except for one event which occurred over 20 years ago involving a tree in a right of way. The affected right of way was patrolled extensively and several trees removed. The total duration of this event was forty eight hours, twenty two minutes.

Grid availability in the region over the past 20 years was also examined and it was confirmed that the system has been highly reliable with minimal outages due to equipment failures. During these component outage occurrences, the transmission grid as a whole has remained available, even during the August 2003 Northeast Blackout.

© 2007 UniStar Nuclear Services, LLC. All rights reserved.
COPYRIGHT PROTECTED

The PJM grid is maintained at 60 Hz. During a system underfrequency condition, the Mid-Atlantic region of PJM utilizes an automatic load shedding scheme which will drop load by 30% in 10% increments at 59.3 Hz, 58.9 Hz & 58.5 Hz.

A review of the grid frequency data for the last five years (including the Northeast Blackout of 2003) indicates that the frequency decay rate during disturbances on the Eastern Interconnection (which includes the PJM Territory) was much less than 3.5 Hz/sec. The worst decay rate during this time period occurred on August 4, 2007 and was due to a 4400 MW generation loss event (largest disturbance on the grid since August 2003 blackout) which resulted in a sustained decay rate of 0.015 Hz/sec. As such, the reactor coolant pumps are not expected to be subject to a sustained frequency decay greater than 3.5 Hz/sec.

Failure Mode and Effects Analysis

A failure mode and effects analysis (FMEA) of the switchyard components has been performed to assess the possibility of simultaneous failure of both circuits for CCNPP Unit 3 as a result of single events, such as a breaker not operating during fault conditions, a spurious relay trip, a loss of a control circuit power supply, or a fault in a switchyard bus or transformer. This FMEA supplements the FMEA described in U.S. EPR FSAR Section 8.2.2.4.

The 500 kV components addressed in this FMEA are as follows and a summary of the results of this FMEA is presented below.

- Transmission System
- Transmission Line Towers
- Transmission Line Conductors
- Switchyard
- Circuit Breakers
- Disconnect Switches

Transmission System Failure Mode Evaluation

The offsite power system is comprised and built with sufficient capacity and capability to assure that design limits and design conditions, relative to the offsite power system, maintain their function in the event of a postulated accident.

The transmission system associated with the CCNPP Unit 3 is designed and constructed so that no loss of offsite power to the 500 kV switchyard is experienced with the occurrence of any of the following events:

- Loss of one transmission circuit.
- Loss of any one transmission circuit and generator.
- Loss of a generator.
- A three phase fault occurring on any transmission circuit which is cleared by primary or backup relaying.

© 2007 UniStar Nuclear Services, LLC. All rights reserved.
COPYRIGHT PROTECTED

The offsite electric power system supplies at least two preferred power circuits, which will be physically independent and separate. These lines are located to minimize the likelihood of simultaneous failure under operating, postulated accident, and postulated adverse environmental conditions. The preferred circuits are maintained and connected to the CCNPP Unit 3 MSU transformer via the CCNPP Unit 3 switchyard. The preferred circuits maintain a 200 ft (60 m) separation between associated parallel transmission lines.

Interface of the transmission system includes two inter-ties to the existing CCNPP Units 1 and 2 switchyard which are approximately 1 mi (1.6 km) in length. In addition, transmission lines that originally connected to the CCNPP Units 1 and 2 switchyard and extended to two neighboring substations (Waugh Chapel circuit 5052 and Chalk Point circuit 5072) are re-routed, near the CCNPP Units 1 and 2 switchyard, to the CCNPP Unit 3 switchyard. A new 1 mi (1.6 km) long transmission line corridor, that provides the inter-tie between the two switchyards as well as a corridor for the two re-routed lines from the neighboring substations, has been designed. The lines through this corridor are located to minimize the likelihood of simultaneous failure under operating, postulated accident, and postulated adverse environmental conditions.

Transmission Line Tower Failure Mode Evaluation

The new 500 kV towers and the reworked transmission line towers outside of the new 500 kV switchyard fence will be designed and constructed using the same type of transmission tower design providing clearances consistent with the National Electrical Safety Code and BGE engineering standards. All existing towers are grounded with either ground rods or a counterpoise ground system. All new transmission line towers will be constructed and grounded using the same methods.

Failure of any one tower or failure of any components within the tower structure, due to structural failure can at most disrupt and cause a loss of power distribution to only those circuits on the tower. The spacing of the towers between adjacent power circuits is designed to account for the collapse of any one tower.

Therefore, one of the preferred sources of power remains available for this failure mode in order to maintain the containment integrity and other vital functions in the event of a postulated accident.

Transmission Line Conductors Failure Mode Evaluation

The new transmission lines will have conductors installed to the proper load carrying conductor size in order to accommodate the load as a result of CCNPP Unit 3.

All existing 500 kV CCNPP transmission lines are currently constructed to provide clearances consistent with the National Electrical Safety Code and BGE engineering standards. At a minimum, all clearances for high voltage conductors above grade would be equal to or exceed present clearance minimums. High voltage conductor span lengths are engineered to establish the required installation guidelines and tensions for each line. All transmission lines crossing roads and railroads comply with the National Electrical Safety Code and BGE engineering standards. The new transmission lines are configured to preclude the crossing of other transmission lines.

Failure of a line conductor would cause the loss of one preferred source of power but not more than one. Therefore, a minimum of one preferred sources of power remains available for this failure mode in order to maintain the containment integrity and other vital functions in the event of a postulated accidents.

© 2007 UniStar Nuclear Services, LLC. All rights reserved.
COPYRIGHT PROTECTED

Switchyard Failure Mode Evaluation

As indicated in Figure 8.2-2, a breaker-and-a-half scheme is incorporated in the design of the 500 kV switchyard at CCNPP Unit 3. The 500 kV equipment in the CCNPP Unit 3 switchyard is all rated and positioned within the bus configuration according to the following criteria in order to maintain load flow incoming and outgoing from the unit.

- Equipment continuous current ratings are chosen such that no single contingency in the switchyard (e.g., a breaker being out of service for maintenance) can result in current exceeding 100% of the continuous current rating of the equipment.
- Interrupting duties are specified such that no faults occurring on the system exceed the equipment rating.
- Momentary ratings are specified such that no fault occurring on the system exceeds the equipment momentary rating.
- Voltage ratings are specified to be greater than the maximum expected operating voltage.

The breaker-and-a-half switchyard arrangement offers the following flexibility to control a failed condition within the switchyard.

- Any faulted transmission line into the switchyard can be isolated without affecting any other transmission line.
- Either bus can be isolated without interruption of any transmission line or other bus.
- Each battery charger is connected to a 480 VAC distribution panel board located in the 500 kV switchyard control house.
- A primary and secondary relaying system is included on each of the four 500 kV transmission circuits from the 500 kV switchyard to the BGE grid. All relay schemes used for protection of the offsite power circuits and the switching station equipment include primary and backup protection features. All breakers are equipped with dual trip coils. Each protection circuit which supplies a trip signal is connected to a separate trip coil.
- Instrumentation and control circuits of the main power offsite circuit (i.e., normal preferred power circuit) are separated from the instrumentation and control circuits for the reserve power circuit (i.e., alternate preferred power circuit)
- The current input for the primary and secondary transmission circuit relaying systems is supplied from separate sets of circuit breaker bushing current transformers. The potential input for the primary and secondary transmission circuit relaying systems is supplied from fused branch circuits originating from a set of coupling capacitor potential devices connected to the associated transmission circuit. The control power for the primary and secondary transmission circuit relaying systems is supplied from separate 125 VDC systems.
- A primary and secondary relay system is included for protection of each of the 500 kV switchyard buses. The zone of protection of each 500 kV bus protection system includes all the 500 kV circuit breakers adjacent to the protected bus. The primary relay is the instantaneous high impedance type used for bus protection to detect both phase

© 2007 UniStar Nuclear Services, LLC. All rights reserved.
COPYRIGHT PROTECTED

and ground faults. This relay is connected in conjunction with auxiliary relays and pilot wire relaying to form a differential protection, instantaneous auxiliary tripping, and transferred tripping relay system. The secondary relay system is a duplicate of the primary relay system.

- The current input for the primary and secondary 500 kV bus relaying systems is supplied from separate sets of 500 kV circuit breaker bushing current transformers. The control power for the relay terminals of the primary and secondary 500 kV bus relaying systems located in the 500 kV switchyard control house is supplied from separate 125 VDC systems.

- A primary and secondary relay system is included on each of the circuits connecting the MSU transformer, EATs and the NATs to their respective 500 kV switchyard position. The zone of protection of each of the Main Power Transformers (MPTs) circuit connection protection system includes two associated circuit breakers at the 500 kV switchyard and the high side bushings of the MSU transformer. The secondary relay system is a duplicate of the primary relay system.

- The current input for the primary and secondary MSU transformer, EATs and the NATs circuit connection relaying systems are supplied from separate sets of 500 kV circuit breaker bushing current transformers, MSU, EATs and the NATs transformer bushing current transformers. The control power for the relay terminals of the primary and secondary MSU circuit connection relaying systems located in the 500 kV switchyard control house are supplied from separate 125 VDC systems. The control power for the relay terminals of the primary and secondary MSU, EATs and NATs circuit connection relaying systems located at the unit relay room are supplied from the respective unit non-Class 1E 125 VDC battery systems.

- Spurious relay operation within the switchyard that trips associated protection system will not impact any primary or backup system.

Therefore, a minimum of one preferred source of power remains available for this failure mode in order to maintain the containment integrity and other vital safety functions in the event of a postulated accident.

Circuit Breakers Failure Mode Evaluation

As indicated in Figure 8.2-2, a breaker-and-a-half scheme is incorporated in the design of the 500 kV switchyard for CCNPP Unit 3. The 500 kV equipment in the CCNPP Unit 3 switchyard is rated and positioned within the bus configuration according to the following criteria in order to maintain load flow incoming and outgoing from the units:

- Circuit breaker continuous current ratings are chosen such that no single contingency in the switchyard (e.g., a breaker being out for maintenance) will result in a load exceeding 100% of the nameplate continuous current rating of the breaker.

- Interrupting duties are specified such that no fault occurring on the system, operating in steady-state conditions will exceed the breaker's nameplate interrupting capability.

- Any circuit breaker can be isolated for maintenance or inspection without interruption of any transmission line or bus.

© 2007 UniStar Nuclear Services, LLC. All rights reserved.
COPYRIGHT PROTECTED

- A fault in a tie breaker or failure of the breaker to trip for a line or generator fault results only in the loss of its two adjacent circuits until it can be isolated by disconnect switches.

- A fault in a bus side breaker or failure of the breaker to trip for a line or generator fault results only in the loss of the adjacent circuits and the adjacent bus until it can be isolated by disconnect switches.

In addition to the above described 500 kV switchyard for CCNPP Unit 3 relaying systems, each of the 500 kV circuit breakers has a primary protection relay and a backup protection relay. The primary relay is a different type or manufacture from the backup relay. This will preclude common mode failure issues with the protection relays.

The primary and secondary relaying systems of the 500 kV switchyard for CCNPP Unit 3 are connected to separate trip circuits in each 500 kV circuit breaker. The control power provided for the 500 kV switchyard primary and secondary relaying protection and breaker control circuits consists of two independent 125 VDC systems.

Disconnect Switches Failure Mode Evaluation

All 500 kV disconnect switches have a momentary rating higher than the available short circuit level. The disconnect switches are implemented into the switchyard configuration to isolate main power circuits that have failed or are out for maintenance. A failure of the disconnect switch results only in the loss of its two adjacent circuits.

Therefore, a minimum of one preferred source of power remains available for this failure mode in order to maintain the containment integrity and other vital functions in the event of a postulated accident.

FMEA Conclusion

The finding of this FMEA analysis is that there are no single failures which would cause the simultaneous failure of both preferred sources of offsite power.}

8.2.2.5 Compliance with GDC 18

The U.S. EPR FSAR includes the following COL Item in Section 8.2.2.5:

> A COL applicant that references the U.S. EPR design certification will provide site-specific information for the station switchyard equipment inspection and testing plan.

This COL Item is addressed as follows:

{CCNPP Unit 3 shall establish an interface agreement that defines the interfaces and working relationships between various CCNPP site organizations and BGE to ensure the offsite power design requirements for the transmission facilities are maintained. The agreement defines the necessary requirements for maintenance, calibration, testing and modification of transmission lines, switchyards, and related equipment. The CCNPP Units 1 and 2, CCNPP Unit 3, and BGE are responsible for maintaining these facilities.

For performance of maintenance, testing, calibration and inspection, BGE follows its own field test manuals, vendor manuals and drawings, industry's maintenance practices and observes Federal Energy Regulatory Commission (FERC) requirements.

© 2007 UniStar Nuclear Services, LLC. All rights reserved.
COPYRIGHT PROTECTED

Transmission line inspections and any resultant maintenance are performed on a periodic basis. The lines are patrolled by helicopter twice a year, usually during the spring and fall, and a full climbing and/or detailed helicopter comprehensive inspection is done every 5 years. As a result of these inspections, any required maintenance is then performed for any of the structural/conductor components. In addition, the need for painting of the structures is reviewed in conjunction with the 5 year inspections and is then further evaluated with subsequent scheduled painting done. Painting is done approximately every 15 to 20 years. Vegetation is generally managed on a five year trimming/cutting schedule but is inspected once a year. Mowing is generally done once a year on the cleared row.

Multiple levels of inspection and maintenance are performed on the CCNPP switchyards, as well as other substation facilities. This inspection and maintenance is as follows:

- Walk-throughs and visual inspections of each substation facility including, but not limited to, reading and recording of equipment counters and meters, site temperature and conditions, and equipment condition.
- Protective relay system testing including: visual inspection, calibration, verification of current and potential inputs, functional trip testing, and correct operation of relay communication equipment.
- Oil sampling of large power transformers. Oil samples are evaluated through the use of gas chromatography and dielectric breakdown analysis.
- Several levels of inspection and maintenance for power circuit breakers. The frequency of each is a function of the number of operations and the length of time in service. External visual inspection of all functional systems, an external test, and internal inspections are used. Frequency of the various maintenance/inspection efforts is based on a combination of operating history of the type of breaker, industry practice and manufacturer's recommended maintenance requirements.
- Thermography is used annually to identify potential thermal heating issues on buses, conductors, connectors and switches.
- Annual maintenance of battery systems is performed, including quarterly visual inspections, verification of battery voltage, and verification of electrolyte level.}

8.2.2.6 Compliance with GDC 33, GDC 34, GDC 35, GDC 38, GDC 41, and GDC 44

No departures or supplements.

8.2.2.7 Compliance with 10 CFR 50.63

The U.S. EPR FSAR includes the following COL Item in Section 8.2.2.7:

> A COL applicant that references the U.S. EPR design certification will provide site-specific information that identifies actions necessary to restore offsite power and use available nearby power sources when offsite power is unavailable.

This COL Item is addressed as follows:

{CCNPP Unit 3} includes two redundant SBO diesel generators designed in accordance with 10 CFR 50.63 (CFR, 2008) and Regulatory Guide 1.155 (NRC, 1988). As such, reliance on additional

© 2007 UniStar Nuclear Services, LLC. All rights reserved.
COPYRIGHT PROTECTED

offsite power sources as an alternate AC source is not required. {There are no special local power sources that can be made available to re-supply the plant following a loss of the offsite power grid or an SBO. However, actions necessary to restore offsite power are identified as part of the procedures and training provided to plant operators for an SBO event described in response to the COL Item in Section 8.4.2.6.4.}

8.2.2.8 Compliance with 10 CFR 50.65(a)(4)

No departures or supplements.

8.2.2.9 Compliance with Branch Technical Position 8-3

No departures or supplements.

8.2.2.10 Compliance with Branch Technical Position 8-6

No departures or supplements.

8.2.3 REFERENCES

{**CFR, 2008.** Loss of All Alternating Current Power, Title 10, Code of Federal Regulations, Part 50.63, U.S. Nuclear Regulatory Commission, 2008.

IEEE, 2000. IEEE Standard for AC High-Voltage Circuit Breakers on a Symmetrical Current Basis – Preferred Ratings and Related Required Capabilities, IEEE Std. C37.06-2000, Institute of Electrical and Electronics Engineers, 2000.

NRC, 1988. Station Blackout, Regulatory Guide 1.155, U.S. Nuclear Regulatory Commission, August 1988.

PJM, 2007. PJM Generator Interconnection Q48 Calvert Cliffs 1640 MW Impact Study, DMS#433706, PJM Interconnection, September 2007.

PJM, 2008. PJM Generator Interconnection Q48 Calvert Cliffs 1640 MW Voltage Study, Docs#465100v2, PJM Interconnection, March 2008.}

© 2007 UniStar Nuclear Services, LLC. All rights reserved.
COPYRIGHT PROTECTED

Table 8.2-1— {BGE Transmission System Circuits Connected to the CCNPP Site}

TERMINATION	NOMINAL VOLTAGE	THERMAL CAPACITY	APPROXIMATE LENGTH
Waugh Chapel Circuit 5051	500 kV	2650 MVA	48 Miles (77 km)
Waugh Chapel Circuit 5052	500 kV	2650 MVA	48 Miles (77 km)
Chalk Point Circuit 5072	500 kV	2250 MVA	18 Miles (29 km)

© 2007 UniStar Nuclear Services, LLC. All rights reserved.
COPYRIGHT PROTECTED

Figure 8.2-1—{CCNPP Unit 3 500kV Switchyard and Transmission Line Layout}

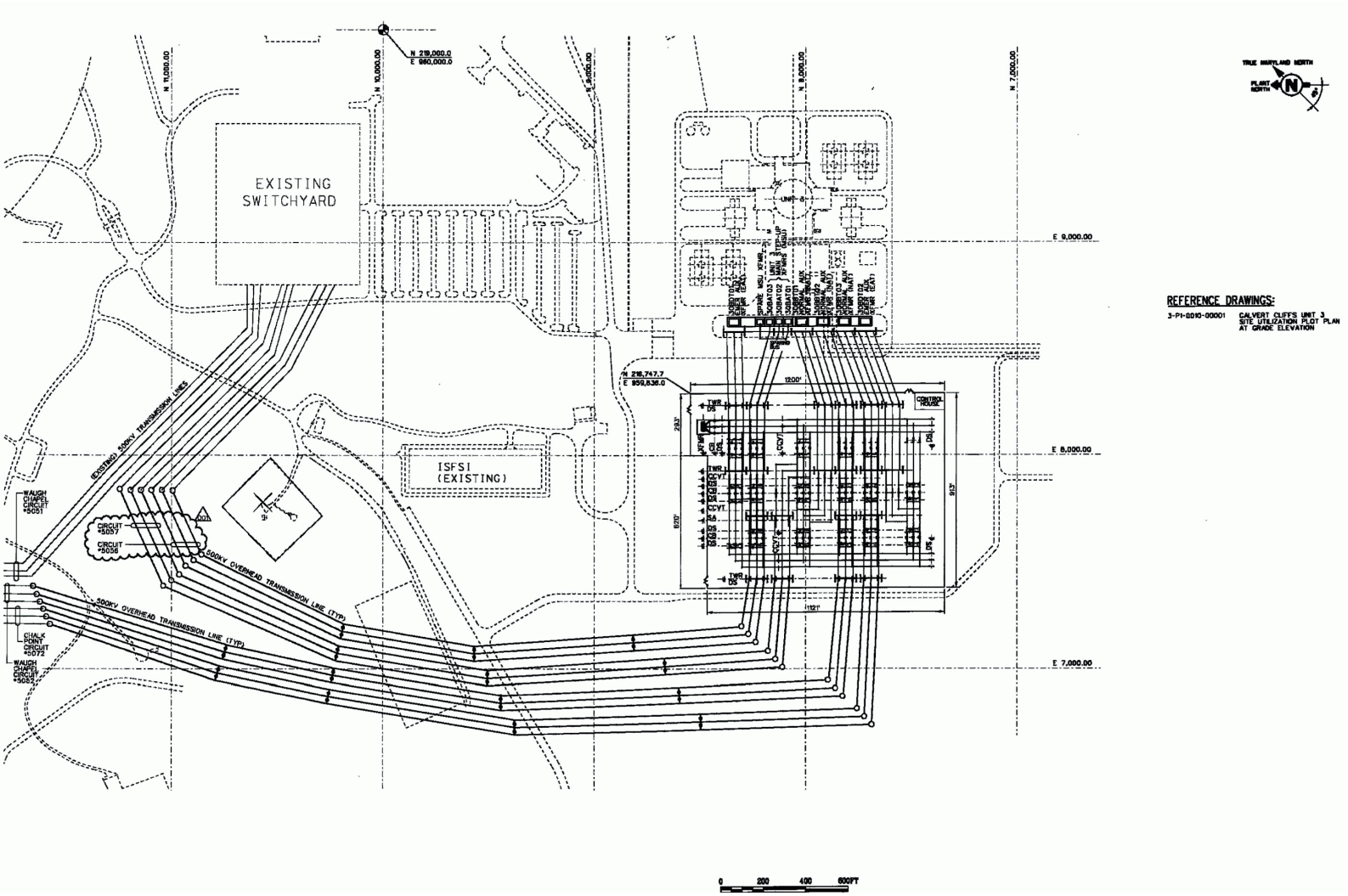

© 2007 UniStar Nuclear Services, LLC. All rights reserved.
COPYRIGHT PROTECTED

Figure 8.2-2—{CCNPP Unit 3 500kV Switchyard Single Line Diagram}

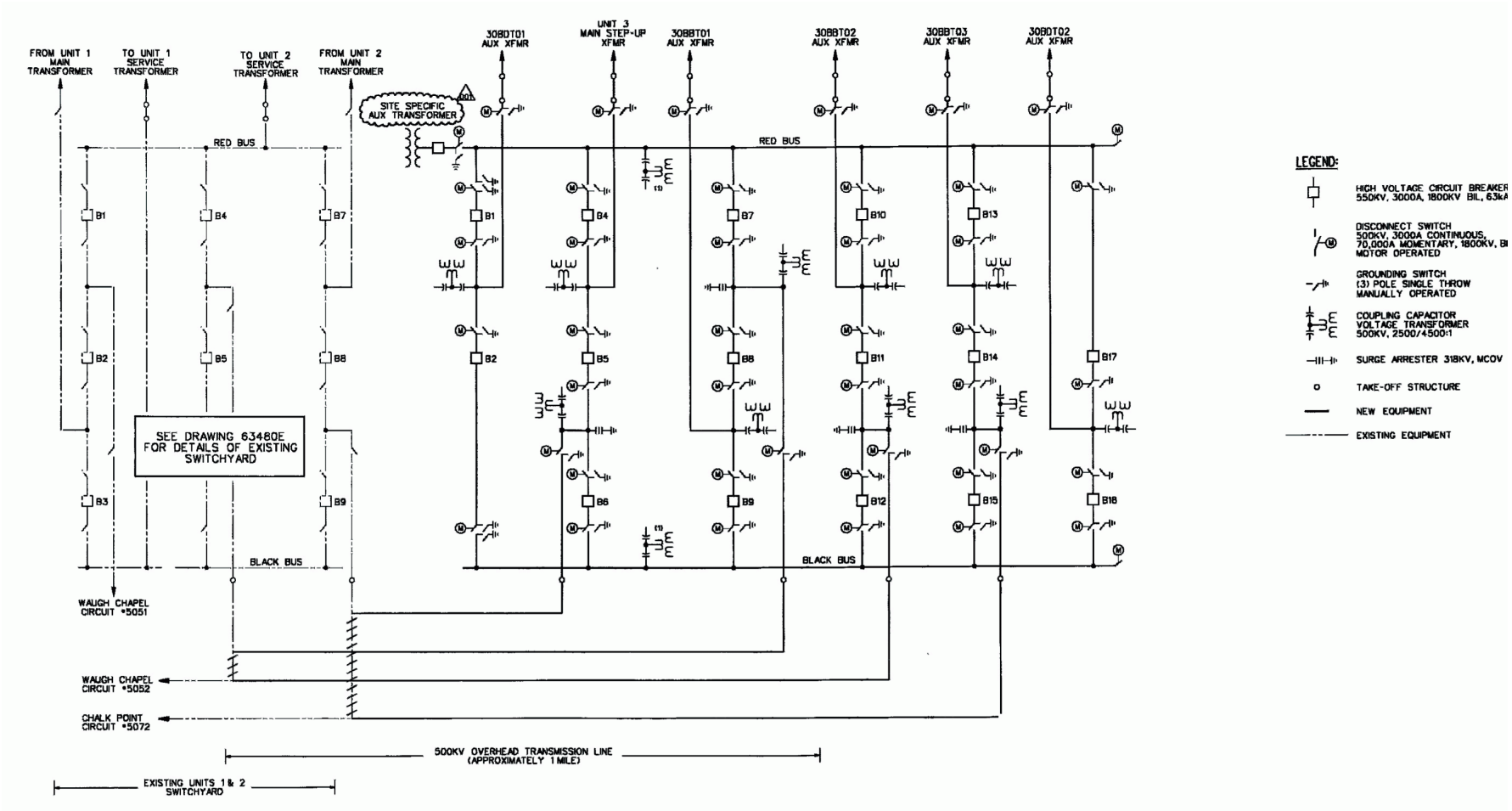

© 2007 UniStar Nuclear Services, LLC. All rights reserved.
COPYRIGHT PROTECTED

8.3 ONSITE POWER SYSTEM

This section of the U.S. EPR FSAR is incorporated by reference with the following supplements.

8.3.1 ALTERNATING CURRENT POWER SYSTEMS

8.3.1.1 Description

Additional site-specific loads powered from the station EDGs are specified in Table 8.1-1, Table 8.1-2, Table 8.1-3, and Table 8.1-4. These tables supplement the information provided in U.S. EPR FSAR Tables 8.3-4, 8.3-5, 8.3-6, and 8.3-7.

{Figure 8.3-1 (Sheets 1 through 3) and Figure 8.3-2 (Sheets 1 through 4)} provide the site-specific modifications to the Emergency and Normal Power Supply Systems Single Line Diagrams. This information supplements U.S. EPR FSAR Figures 8.3-2 and 8.3-3. The site-specific load analysis is provided in Section 8.1.3.

Table 8.3-1 identifies the nominal ratings for the site-specific AC power system main components. This information supplements U.S. EPR FSAR Table 8.3-1.

8.3.1.1.1 Emergency Power Supply System

{There are four divisions of Emergency Power Supply System (EPSS) distribution equipment for the UHS Makeup Water System. The EPSS distribution equipment for the UHS Makeup Water System is located in the Seismic Category I UHS Electrical Building. Each division is functionally independent and physically separated from the other divisions.}

The site-specific EPSS distribution switchgear and nominal bus voltages are shown in Table 8.3-2. This information supplements U.S. EPR FSAR Table 8.3-2.

8.3.1.1.2 Normal Power Supply System

{The site-specific Normal Power Supply System major distribution switchgear and nominal bus voltages are shown in Table 8.3-3. U.S. EPR FSAR Table 8.3-3 lists 480 V AC Load Centers 35BFB, 35BFC, and 35BFD for Train 5, and 480 V AC Load Centers 36BFB, 36BFC, and 36BFD for Train 6. These 480 V AC Load Centers are replaced in the site-specific design with 6.9 kV Switchgear 35BBE and 35BBF for Train 5 and 6.9 kV Switchgear 36BBE and 36BBF for Train 6. The standard cooling tower electrical distribution system is a conceptual design, and the changes are not considered a departure. The changes resulted from increasing the size of the cooling tower wet fans from 250 hp (each) to 350 hp (each).}

8.3.1.1.3 Electric Circuit Protection and Coordination

No departures or supplements.

8.3.1.1.4 Onsite AC Power System Controls and Instrumentation

No departures or supplements.

8.3.1.1.5 Standby AC Emergency Diesel Generators

The U.S. EPR FSAR includes the following COL Holder Item in Section 8.3.1.1.5:

> A COL applicant that references the U.S. EPR design certification will monitor and maintain EDG reliability during plant operations to verify the selected reliability level target is being achieved as intended by RG 1.155.

© 2007 UniStar Nuclear Services, LLC. All rights reserved.
COPYRIGHT PROTECTED

This COL Holder Item is addressed as follows:

{~~Constellation Generation Group~~ Calvert Cliffs 3 Nuclear Project, LLC and UniStar Nuclear Operating Services, LLC} shall monitor and maintain EDG reliability to verify the selected reliability level goal of 0.95 is being achieved as intended by Regulatory Guide 1.155 (NRC, 1988).

8.3.1.1.6 Station Blackout Diesel Generators

No departures or supplements.

8.3.1.1.7 Electrical Equipment Layout

{The electrical distribution system components distribute power to safety-related and non-safety-related site-specific loads located throughout the site.

The EPSS 6.9kV switchgear, 480 V AC load centers, MCCs and distributions transformers for the UHS Makeup Water System are located in the applicable division of the UHS Electrical Building.

An additional transformer is depicted on Figure 8.3-3 that feeds a desalinization plant, waste water treatment facility, and Circulating Water System Cooling Tower dryer fans. This distribution equipment is not fed from the plant distribution system, and is not part of the EPSS or Normal Power Supply System.}

8.3.1.1.8 Raceway and Cable Routing

{The EPSS distribution equipment for the UHS Makeup Water System is located in the applicable division of the Seismic Category I UHS Electrical Building.}

8.3.1.1.9 Independence of Redundant Systems

{The EPSS distribution equipment for the UHS Makeup Water System is located in the applicable division of the Seismic Category I UHS Electrical Building.}

8.3.1.1.10 Containment Electrical Penetrations

No departures or supplements.

8.3.1.1.11 Criteria for Class 1E Motors

No departures or supplements.

8.3.1.1.12 Overload Protection for Motor-Operated Safety-Related Valves

No departures or supplements.

8.3.1.1.13 Physical Identification of Safety-Related Equipment

No departures or supplements.

8.3.1.2 Analysis

No departures or supplements.No departures or supplements.

8.3.1.2.1 Compliance with GDC 2

No departures or supplements.

© 2007 UniStar Nuclear Services, LLC. All rights reserved.
COPYRIGHT PROTECTED

8.3.1.2.2 Compliance with GDC 4

No departures or supplements.

8.3.1.2.3 Compliance with GDC 5

No departures or supplements.

8.3.1.2.4 Compliance with GDC 17

{The EPSS distribution equipment for the UHS Makeup Water System is located in the applicable division of the Seismic Category I UHS Electrical Building. Each division is functionally independent and physically separated from the other divisions.}

8.3.1.2.5 Compliance with GDC 18

No departures or supplements.

8.3.1.2.6 Compliance with GDC 33, GDC 34, GDC 35, GDC 38, GDC 41, and GDC 44

No departures or supplements.

8.3.1.2.7 Compliance with GDC 50

No departures or supplements.

8.3.1.2.8 Compliance with 10 CFR 50.63

No departures or supplements.

8.3.1.2.9 Compliance with 10 CFR 50.65(a)(4)

No departures or supplements.

8.3.1.2.10 Compliance with 10 CFR 50.34 Pertaining to Three Mile Island Action Plan Requirements

No departures or supplements.

8.3.1.2.11 Branch Technical Positions

No departures or supplements.

8.3.1.3 Electrical Power System Calculations and Distribution System Studies for AC Systems

The U.S. EPR FSAR includes the following conceptual design information in Section 8.3.1.3: Figure 8.3-4 [[Typical Station Grounding Grid]]

The conceptual design information is addressed as follows:

{The above U.S. EPR FSAR conceptual design information, including U.S. EPR FSAR Figure 8.3-4, is applicable to CCNPP Unit 3}.

8.3.2 DC POWER SYSTEMS

No departures or supplements.

© 2007 UniStar Nuclear Services, LLC. All rights reserved.
COPYRIGHT PROTECTED

8.3.3 REFERENCES

{**NRC, 1988.** Station Blackout, Regulatory Guide 1.155, U.S. Nuclear Regulatory Commission, August 1988.}

© 2007 UniStar Nuclear Services, LLC. All rights reserved.
COPYRIGHT PROTECTED

Table 8.3-1—{CCNPP Unit 3 AC Power System Component Data Nominal Values}

Component	Nominal Ratings
EPSS Distribution Transformers	Dry Type
31BMT05, 32BMT05	60 Hz, three phase, air cooled
33BMT05, 34BMT05	6.9 kV to 480 V
	500 kVA

© 2007 UniStar Nuclear Services, LLC. All rights reserved.
COPYRIGHT PROTECTED

Table 8.3-2—{CCNPP Unit 3 EPSS Switchgear, Load Center, and Motor Control Center Numbering and Nominal Voltage}

Nominal Voltage Level	Division	Switchgear / Load Center / Motor Control Center
480 V MCC	1	31BNG01[(1)]
480 V MCC	2	32BNG01[(1)]
480 V MCC	3	33BNG01[(1)]
480 V MCC	4	34BNG01[(1)]

(1) Equipment located in the respective division in the UHS Electrical Building.

© 2007 UniStar Nuclear Services, LLC. All rights reserved.
COPYRIGHT PROTECTED

Table 8.3-3—{CCNPP Unit 3 Normal Power Supply System Switchgear, Load Center, and Motor Control Center Numbering and Nominal Voltage}

Nominal Voltage Level	Train	Bus / Load Center
6.9 kV Switchgear	5	35BBE[(1)], 35BBF[(1)]
6.9 kV Switchgear	6	36BBE[(a)], 36BBF[(1)]

(1) Equipment Located in the Circulating Water System Cooling Tower Area. U.S. EPR FSAR Table 8.3-3 lists 480 V AC Load Centers 35BFB, 35BFC, and 35BFD for Train 5, and 480 V AC Load Centers 36BFB, 36BFC, and 36BFD for Train 6. These 480 V AC Load Centers are replaced in the site-specific design with 6.9 kV Switchgear 35BBE and 35BBF for Train 5 and 6.9 kV Switchgear 36BBE and 36BBF for Train 6.

© 2007 UniStar Nuclear Services, LLC. All rights reserved.
COPYRIGHT PROTECTED

Figure 8.3-1—{CCNPP Unit 3 Emergency Power Supply System Single Line Drawing}

(Page 1 of 3)

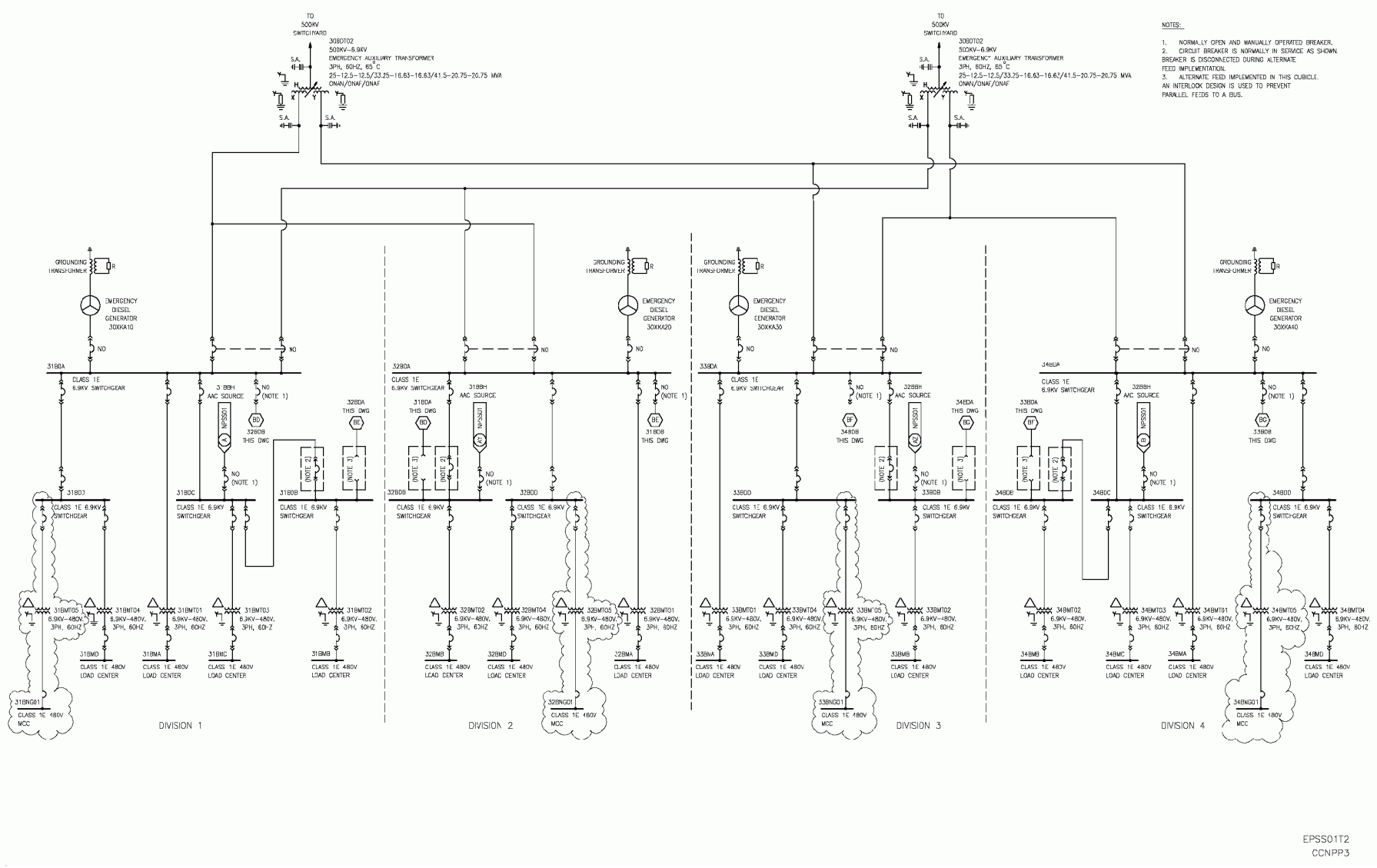

© 2007 UniStar Nuclear Services, LLC. All rights reserved.
COPYRIGHT PROTECTED

Figure 8.3-1—{CCNPP Unit 3 Emergency Power Supply System Single Line Drawing}
(Page 2 of 3)

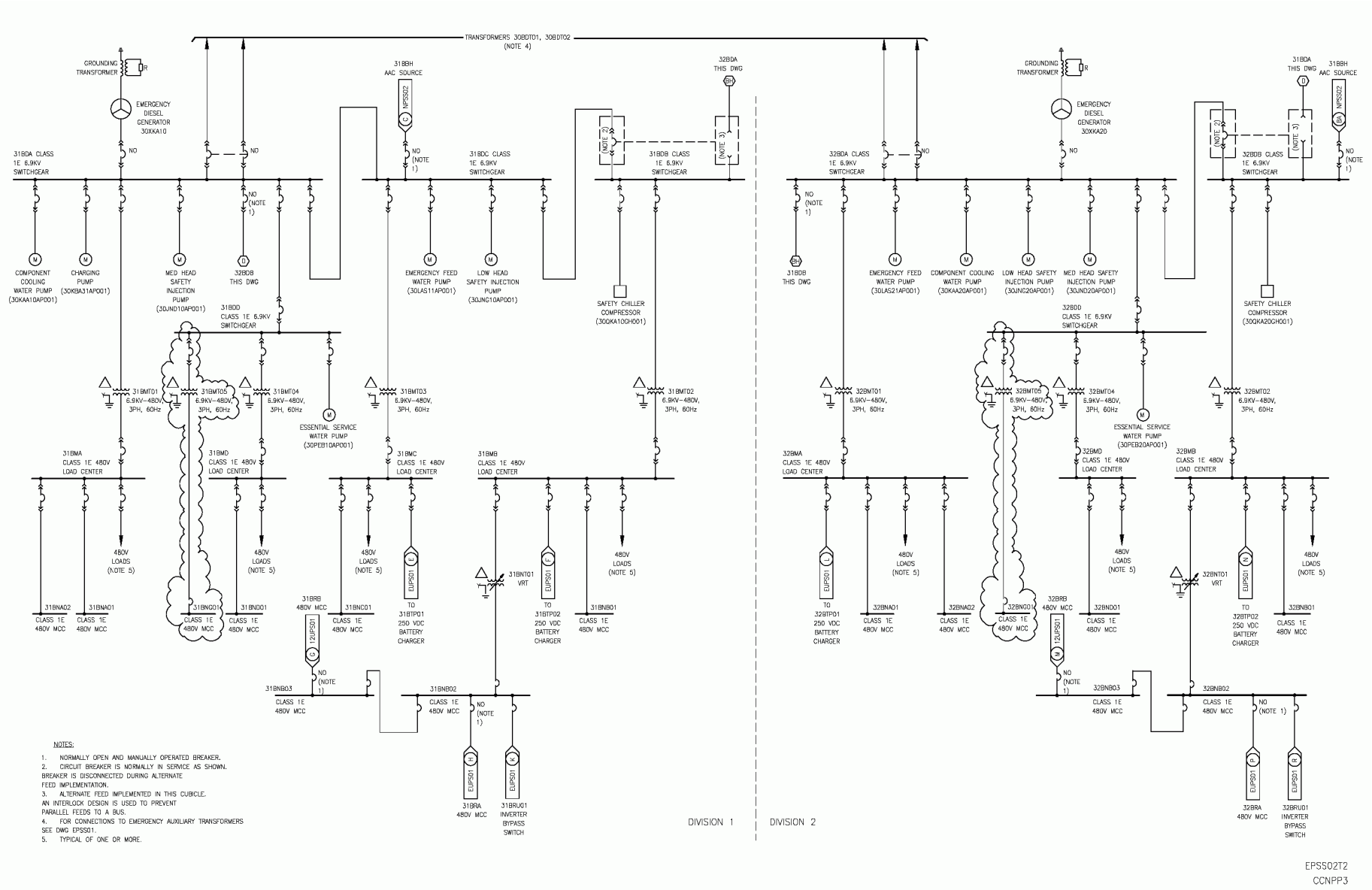

© 2007 UniStar Nuclear Services, LLC. All rights reserved.
COPYRIGHT PROTECTED

Figure 8.3-1—{CCNPP Unit 3 Emergency Power Supply System Single Line Drawing}

(Page 3 of 3)

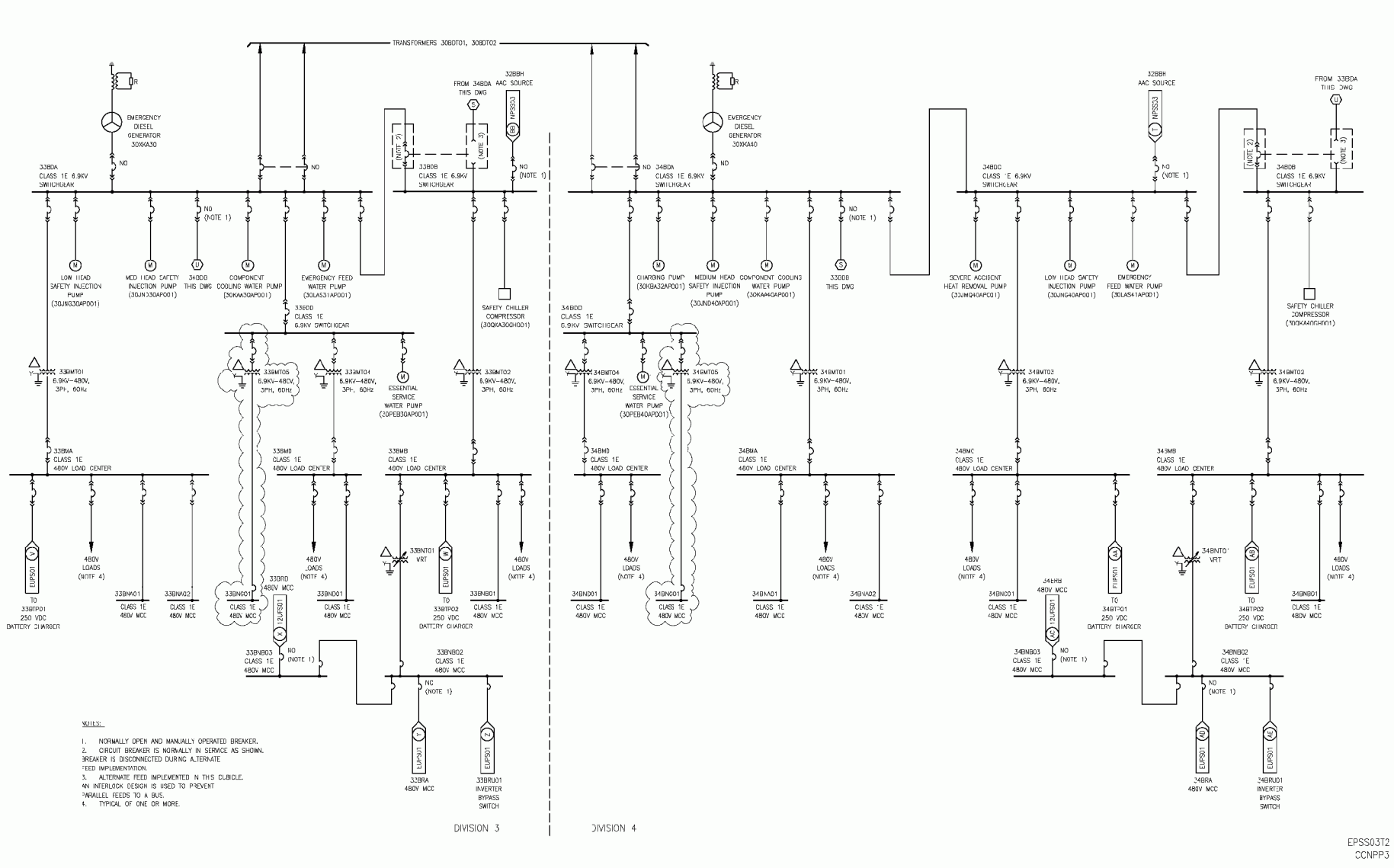

© 2007 UniStar Nuclear Services, LLC. All rights reserved.
COPYRIGHT PROTECTED

Figure 8.3-2—{CCNPP Unit 3 Normal Power Supply System Single Line Drawing}

(Page 1 of 4)

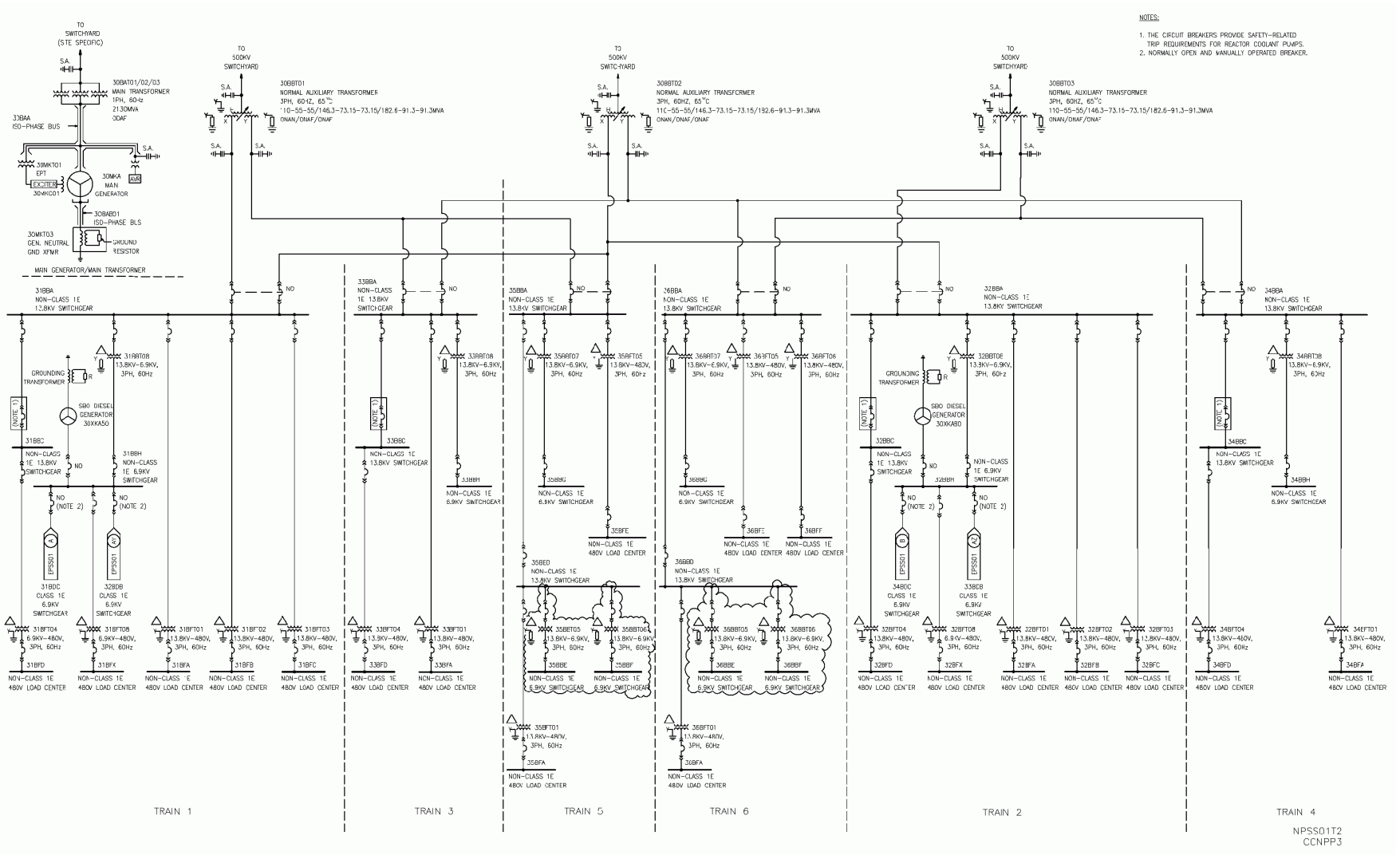

© 2007 UniStar Nuclear Services, LLC. All rights reserved.
COPYRIGHT PROTECTED

Figure 8.3-2—{CCNPP Unit 3 Normal Power Supply System Single Line Drawing}

(Page 2 of 4)

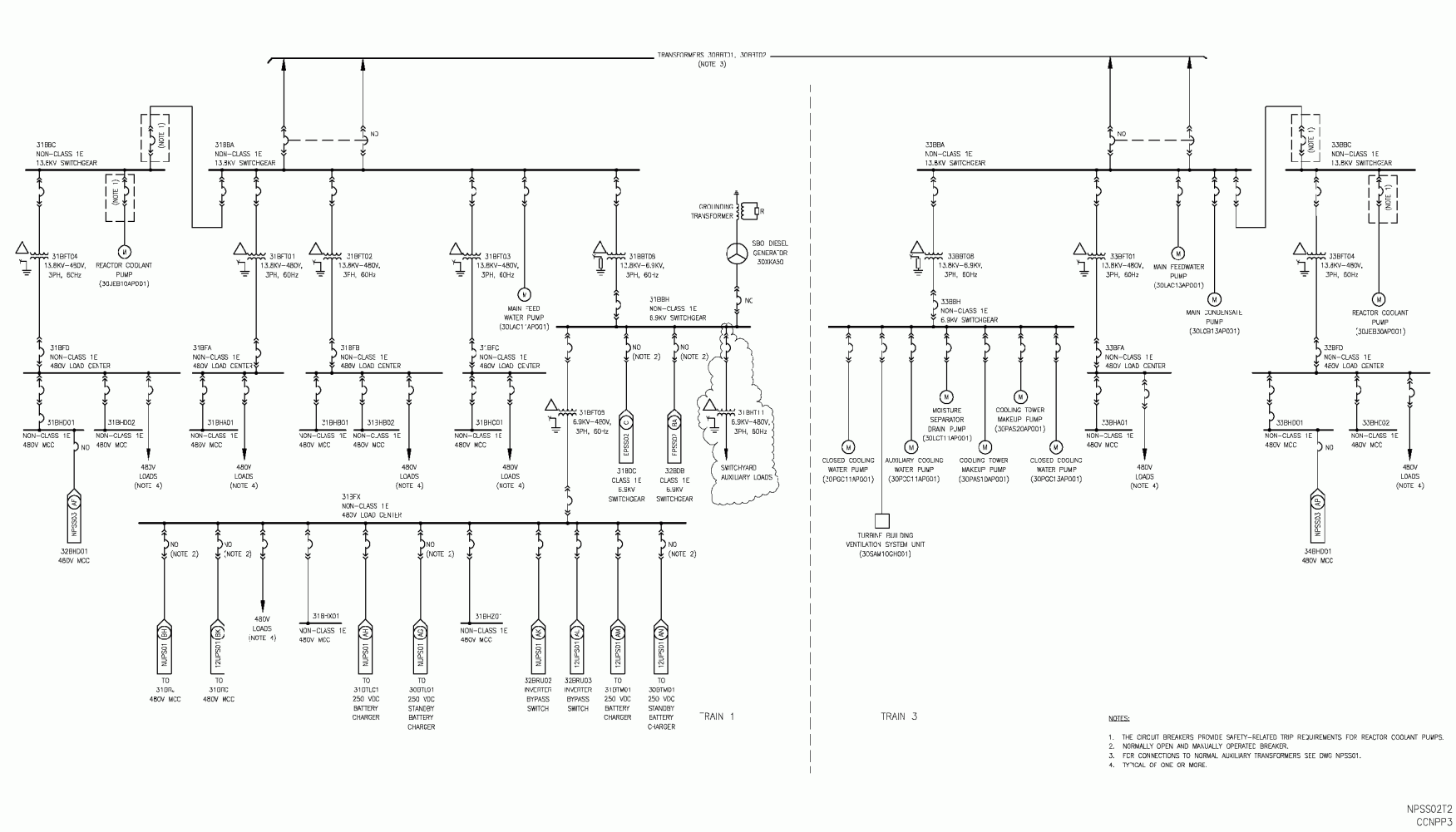

© 2007 UniStar Nuclear Services, LLC. All rights reserved.
COPYRIGHT PROTECTED

Figure 8.3-2—{CCNPP Unit 3 Normal Power Supply System Single Line Drawing}

(Page 3 of 4)

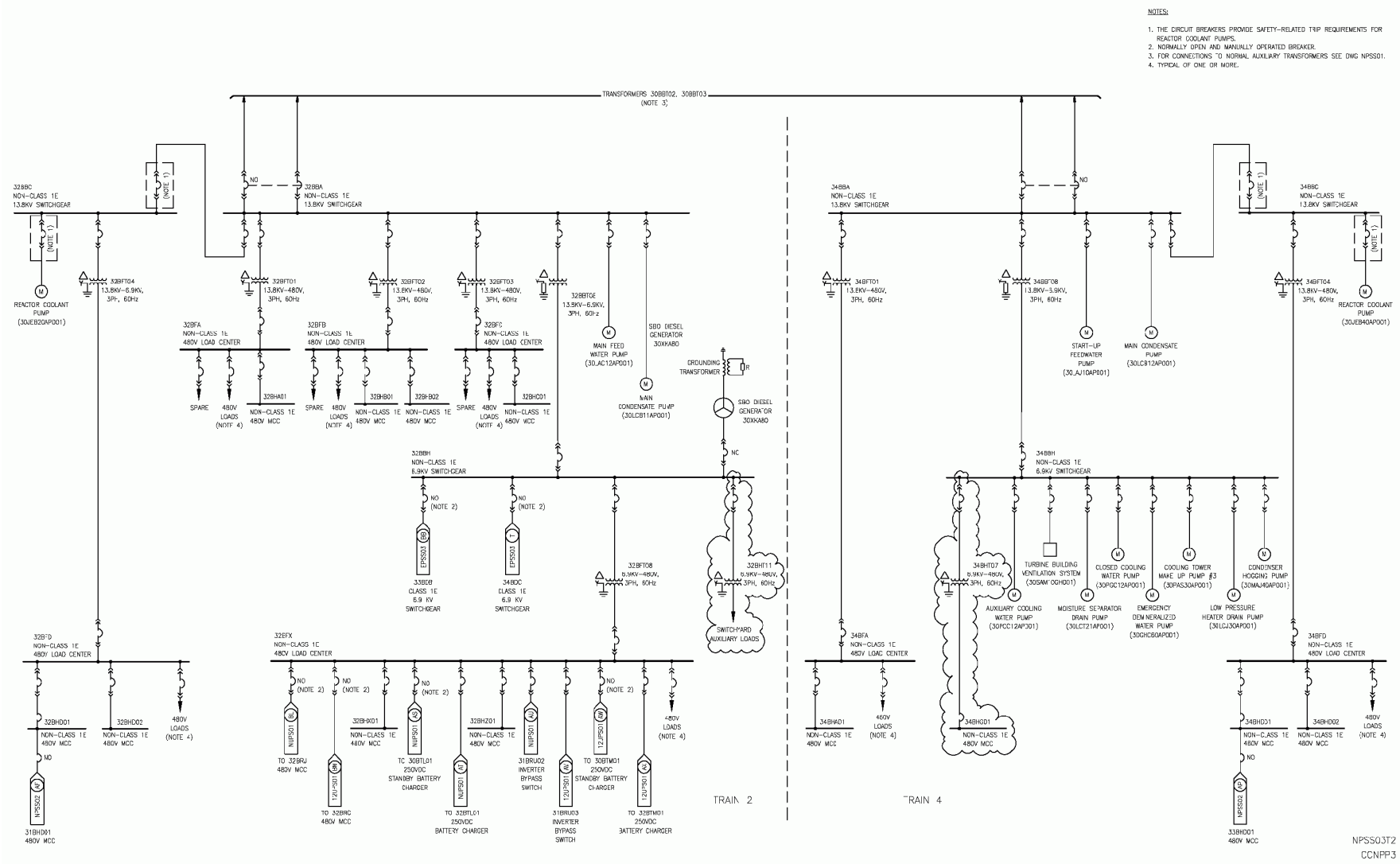

© 2007 UniStar Nuclear Services, LLC. All rights reserved.
COPYRIGHT PROTECTED

Figure 8.3-2—{CCNPP Unit 3 Normal Power Supply System Single Line Drawing}

(Page 4 of 4)

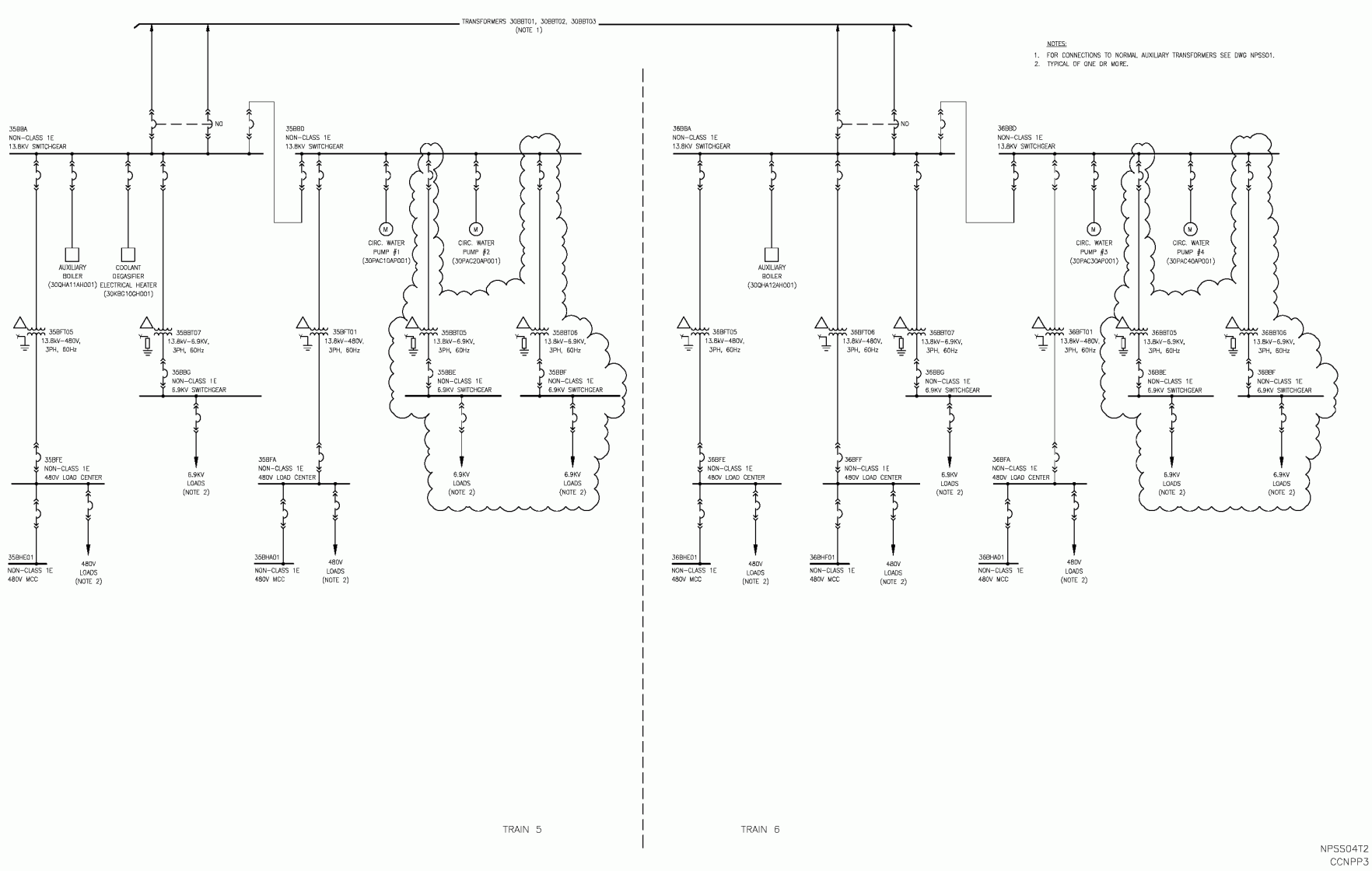

© 2007 UniStar Nuclear Services, LLC. All rights reserved.
COPYRIGHT PROTECTED

Figure 8.3-3—{CCNPP Unit 3 Transformer 30BBT04 Distribution System Single Line Drawing}

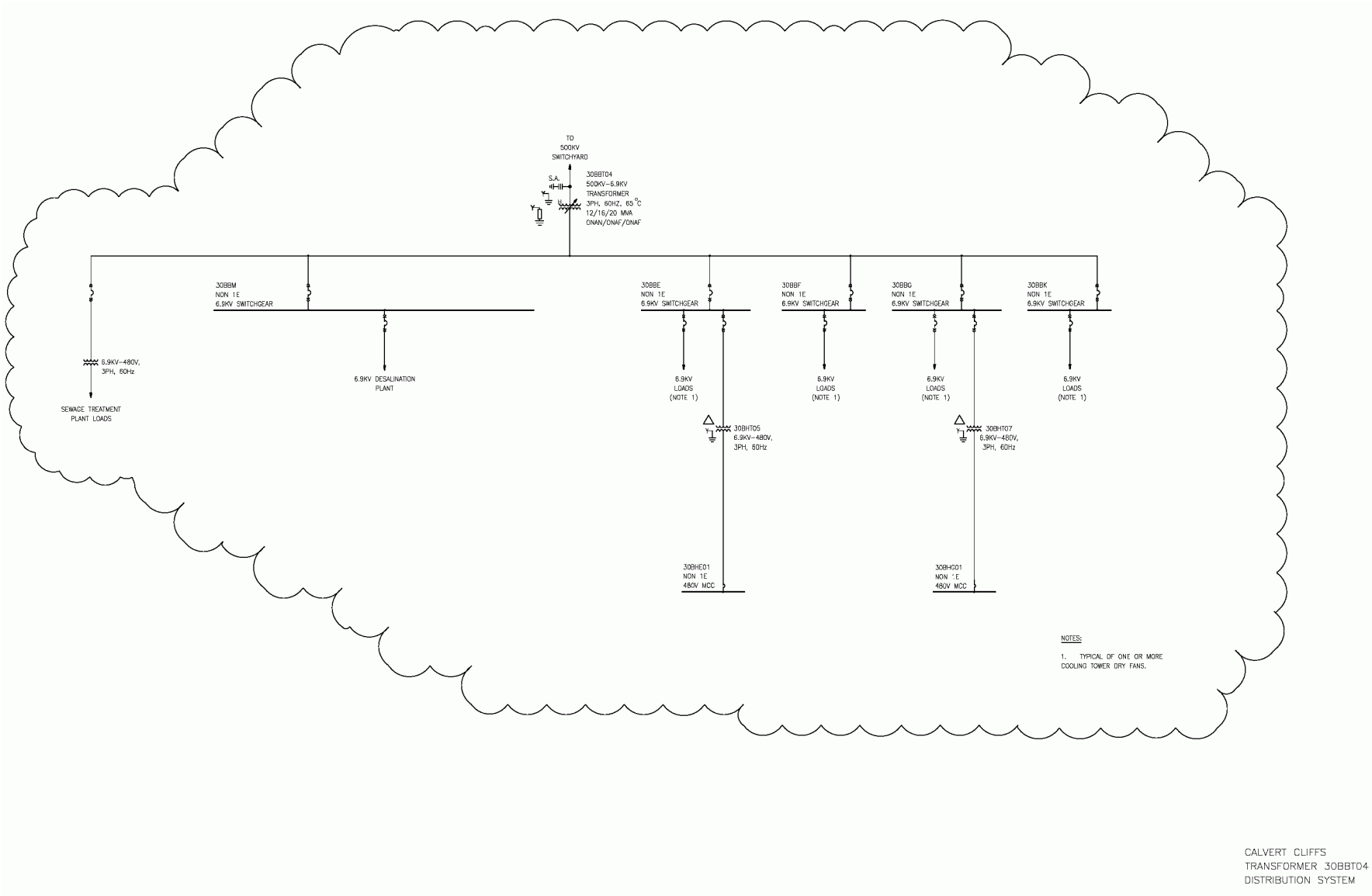

© 2007 UniStar Nuclear Services, LLC. All rights reserved.
COPYRIGHT PROTECTED

8.4 STATION BLACKOUT

This section of the U.S. EPR FSAR is incorporated by reference with the following supplements.

8.4.1 DESCRIPTION

No departures or supplements.

8.4.1.1 Station Blackout Diesel Generators

No departures or supplements.

8.4.1.2 Generator

No departures or supplements.

8.4.1.3 Alternate AC Power System Performance

The U.S. EPR FSAR includes the following COL Item in Section 8.4.1.3:

> A COL applicant that references the U.S. EPR design certification will provide site-specific information that identifies any additional local power sources and transmission paths that could be made available to resupply the power plant following a LOOP.

This COL Item is addressed as follows:

{The CCNPP Unit 3 switchyard will be located less than 1 mi (1.6 km) from the existing CCNPP Units 1 and 2 switchyard. There are no special local sources that can be made available to re-supply power to the plant following loss of a grid or an SBO. However, the following normal connections are as follows:

- CCNPP Unit 1 via two connections to the CCNPP Units 1 and 2 switchyard.
- CCNPP Unit 2 via two connections to the CCNPP Units 1 and 2 switchyard.
- Waugh Chapel 500 kV circuit 5051 via two connections to the CCNPP Units 1 and 2 switchyard.
- Waugh Chapel 500 kV circuit 5052, relocated from the CCNPP Units 1 and 2 switchyard to the CCNPP Unit 3 switchyard.
- Chalk Point 500 kV circuit 5072, relocated from the CCNPP Unit Units 1 and 2 switchyard to the CCNPP Unit 3 switchyard.}

8.4.1.4 Periodic Testing

No departures or supplements.

8.4.2 ANALYSIS

No departures or supplements.

8.4.2.1 10 CFR 50.2-Definitions and Introduction

No departures or supplements.

© 2007 UniStar Nuclear Services, LLC. All rights reserved.
COPYRIGHT PROTECTED

8.4.2.2 10 CFR 50.63-Loss of All Alternating Current Power

No departures or supplements.

8.4.2.3 10 CFR 50.65-Requirements for Monitoring the Effectiveness of Maintenance of Nuclear Power Plants

No departures or supplements.

8.4.2.4 Appendix A to 10 CFR 50, GDC for Nuclear Power Plants

No departures or supplements.

8.4.2.5 RG 1.9-Application Testing of Safety-Related Diesel Generators in Nuclear Power Plants-Revision 4

No departures or supplements.

8.4.2.6 RG 1.155-Station Blackout

No departures or supplements.

8.4.2.6.1 RG 1.155 C.3.1-Minimum Acceptable Station Blackout Duration Capability (Station Blackout Coping Duration)

{~~Constellation Generation Group~~ Calvert Cliffs 3 Nuclear Project, LLC and UniStar Nuclear Operating Services, LLC} utilize the coping analysis described in Section 8.4.2.6 of the U.S. EPR FSAR.

8.4.2.6.2 RG 1.155 C.3.2-Evaluation of Plant-Specific Station Blackout Capability (Station Blackout Coping Capability)

No departures or supplements.

8.4.2.6.3 RG 1.155 C.3.3-Modification to Cope with Station Blackout — AAC Power Sources

No departures or supplements.

8.4.2.6.4 RG 1.155 C.3.4-Procedures and Training to Cope with Station Blackout (Procedures and Training)

The U.S. EPR FSAR includes the following COL Item in Section 8.4.2.6.4:

> A COL applicant that references the U.S. EPR design certification will address the RG 1.155 position C.3.4 related to procedures and training to cope with SBO.

This COL Item is addressed as follows:

Procedures and training shall include the operator actions necessary to cope with a station blackout for at least the duration determined according to Regulatory Guide 1.155 (NRC, 1988), Regulatory Position C.3.1, and shall include the operator actions necessary to restore normal decay heat removal once AC power is restored.

Procedures shall be integrated with the plant-specific technical guidelines and emergency operating procedure program, consistent with Supplement 1 to NUREG-0737 (NRC, 1982). The

© 2007 UniStar Nuclear Services, LLC. All rights reserved.
COPYRIGHT PROTECTED

task analysis portion of the emergency operating procedure program shall include an analysis of instrumentation adequacy during a station blackout.

8.4.2.7 Quality Assurance

No departures or supplements.

8.4.3 REFERENCES

{**NRC, 1982.** Supplement 1 to NUREG-0737 – Requirements for Emergency Response Capability, Generic Letter 82-33, U.S. Nuclear Regulatory Commission, December 1982.

NRC, 1988. Station Blackout, Regulatory Guide 1.155, U.S. Nuclear Regulatory Commission, August 1988.}

© 2007 UniStar Nuclear Services, LLC. All rights reserved.
COPYRIGHT PROTECTED