Official Transcript of Proceedings

NUCLEAR REGULATORY COMMISSION

Title: Advisory Committee on Reactor Safeguards
Plant Operations and Fire Protection
Subcommittee: Watts Bar Nuclear Plant

Docket Number: 50-391

Location: Spring City, Tennessee

Date: Tuesday, July 28, 2009

Work Order No.: NRC-2983 Pages 1-134

NEAL R. GROSS AND CO., INC.
Court Reporters and Transcribers
1323 Rhode Island Avenue, N.W.
Washington, D.C. 20005
(202) 234-4433

UNITED STATES OF AMERICA

NUCLEAR REGULATORY COMMISSION

+ + + + +

ADVISORY COMMITTEE ON REACTOR SAFEGUARDS

MEETING OF THE SUBCOMMITTEE ON

PLANT OPERATIONS AND FIRE PROTECTION

+ + + + +

Watts Bar Nuclear Plant Unit 2

Information Briefing

Construction & Operating

License Application

Docket No. 50-391

+ + + + +

Tuesday, July 28, 2009

+ + + + +

Watts Bar Nuclear Plant Training Center

1260 Nuclear Plant Road

Spring City, Tennessee 37381

APPEARANCES:

Presenters:

MASOUD BAJESTANI, Vice President Watts Bar Unit 2

WILLIAM CROUCH, Engineering Manager Watts Bar Unit 2

EDWIN FREEMAN, Cost & Scheduling Manager
Watts Bar Unit 2

ACRS Members:

HAROLD RAY, Chairman

SAID ABDEL-KHALIK, Vice Chairman

SANJOY BANERJEE

CHARLES H. BROWN, Jr.

OTTO L. MAYNARD

HAROLD RAY

JOHN D. SIEBER

JOHN W. STETKAR

Designated Federal Official:

MAITRI BANERJEE

P-R-O-C-E-E-D-I-N-G-S

(1:00 p.m.)

CHAIRMAN RAY: I'm Harold Ray, Chairman of the ACRS Plant Operations and Fire Protection Subcommitte for Operating License Review of Watts Bar Nuclear Plant Unit 2. And I want to underscore the words Operating License Review. That's the scope of what we'll be doing here in this process to lead this meeting today.

Other ACRS members in attendance are Jack Sieber, Charles Brown, Otto Maynard, John Stetkar, and Said Abdel-Khalik. Ms. Maitri Banerjee is the Designated Federal Official for this meeting.

Subcommittee had a meeting with TVA and the NRC staff on March 31st in Washington, D.C. area. We were briefed about the TVA activities related to restart of Watts Bar Unit 2 construction and NRC review of the Operating License Application.

After that meeting the Subcommittee decided to visit Watts Bar to see firsthand the status of construction, material condition, and controls TVA has implemented for quality construction and for avoiding any impact on the safe operation of Unit 1.

We toured the Plant this morning for a few hours, saw a good deal of things that are relevant to those considerations and will continue our meeting here, of course, this afternoon.

The purpose of today's meeting is to get an update from TVA regarding issues related to the design, licensing, and construction activities, particularly since our March meeting.

We have another Subcommittee meeting on July 30th at the NRC Region II Office. It will chaired by my colleague, Jack Sieber. To talk about the NRC inspections at Watts Bar Unit 2, among other things not related to Watts Bar.

The objective of both meetings is to gather information, analyze relevant issues and facts, and formulate proposed positions and future actions as appropriate for deliberation by the full Committee. Action is only taken by the full Committee.

ON behalf of myself and the ACRS, I want to want to thank TVA for organizing our Plant tour and providing a facility to support this meeting today.

This briefing is open to the public. Rules for participation in today's meeting were announced as part of the notice of this meeting published in the Federal Register on July 2nd, 2009.

We have a telephone bridge line provided by TVA for the public to hear the deliberations. I understand there's no one on the line as yet. We have members of the public who are with us here in the meeting room.

If the phone line is used, to minimize disturbance, the line will kept in what is called a listening only mode until the last 15 minutes of this meeting at which time there will be an opportunity for members of the public, either here in the meeting room or on the phone line, to make statements or provide comments to us.

As a transcript of the meeting is being kept, I request that participants in the meeting use the microphones located in the meeting room when addressing the Subcommittee. Participants should first identify themselves and speak with sufficient clarity and volume so that they can be readily heard.

We will now proceed with the meeting. And I call upon Mr. Masoud Bajestani of TVA to begin the presentation.

Masoud.

MR. BAJESTANI: Thank you very much, Harold. I hope you guys had a good tour of the Plant. What we want to do today, we want to cover some of the questions that came up during the tour this

morning and also some of the questions that you guys had during our March meeting. We want to cover all those questions. With that I'm going to go through the introduction of the TVA team first and then we get into the agenda.

Bill.

MR. CROUCH: I'm Bill Crouch. I'm the Engineering Manager for Watts Bar Unit 2.

MR. FREEMAN: Ed Freeman, the Cost and Scheduling Manager for Watts Bar Unit 2.

MR. ARENT: I'm Gordon Arent, the Licensing Manager for Watts Bar Unit 2.

MR. OSBORNE: Dave Osborne, the Lead Civil Engineer.

MR. RENQUEWIST: I'm Gordon Renquist (phonetic), Manager for Watts Bar Unit 2.

MR. OSBORNE: I'm Dave Osborne, the Civil Engineering Manager.

MR. COOMBS: Frank Coombs, Engineering Specialist.

UNIDENTIFIED MALE: Mechanical Design Manager of Watts Bar Unit 2.

MR. HILMES: Steve Hilmes, Electrical and INC Manager for Watts Bar Unit 2.

MR. SCHIESSEL: Jerry Schiessel, TVA

Construction Manager Watts Bar Unit 2.

MR. BRIODY: Brian Briody, Maintenance and Modifications Manager.

MR. BARON: Raul Baron, Nuclear Assurance Project Manager for Watts Bar Unit 2.

CHAIRMAN RAY: Say that again. Are you Nuclear Assurance?

MR. BARON: Yes.

CHAIRMAN RAY: All right, I'll keep my eye on you.

MR. OLSON: Pete Olson, Startup Manager of Watts Bar Unit 2.

MR. BAJESTANI: Thank you. Go to Page 2 of the presentation. We got the agenda here. Obviously we went through the introduction.

The first thing I'm going to cover is actually organization. When we finished Browns Ferry Unit 1, we learned a lot of lessons from Browns Ferry. One of the things that we did, TVA decided to do is separate the nuclear generation versus nuclear operation. So we have created a new organization which we call it NGDC. This organization, the Senior VP of NGDC reports directly to Chief Operating Officer just like Chief Nuclear Officer that reports directly to Chief Operating Officer. We did this organization

change based on the fact that we focus on new generation construction and let the Operating folks focus on operating the units safe and reliable.

If you go look at Page 3, the organization, like I said, Senior VP of Nuclear Generation reports directly to Bill McCollum, which is our Chief Operating Officer. I report to Senior VP of NGDC. And then if you look at the organization below me, you see the Safety Manager, Construction Manager, Modifications, Engineering Manager, Pre-Op Startup, Cost and Scheduling, Employee Concerns, which actually dotted line to me and reports actually to outside to Ashok, which is our Senior VP of Nuclear Generation.

Also other organization that support this project is Procurement Manager. Again Procurement Manager reports to Senior VP of Procurement, which reports to Chief Administrative Officer. Same thing with our QA. QA is actually again dotted line with a solid line to outside organization through the General Manager of NGDC to Senior VP of Nuclear Generation.

CHAIRMAN RAY: Where now exactly are you speaking, Masoud? Is it Nuclear Assurance Project Manager, is that who you're referring to?

MR. BAJESTANI: The Nuclear Assurance Project Manager is Raul Baron, which he's sitting back

there.

CHAIRMAN RAY: I forgot. I said I'd keep my eye on him.

MR. BAJESTANI: That's right.

CHAIRMAN RAY: All right. But go ahead because I was curious about the dashed and the solid line. He has two dash lines and one solid line. Talk about that just a little bit, please.

MR. BAJESTANI: Right now we are going through the transition actually of Quality Assurance. Quality Assurance when we started this project it was reporting to through Nuclear Power group. Now we have actually -- going again through the transition with removing the Quality Assurance, We have hired General Manager of Nuclear Generation oversight which Raul now reports to him and he reports directly to Senior VP of Nuclear Generation.

CHAIRMAN RAY: Is it Mr. Hellstern?

MR. BAJESTANI: That's correct.

CHAIRMAN RAY: He would be responsible for all the nuclear programs?

MR. BAJESTANI: For all NGDC, that's correct.

Any other questions on this page?

Okay, next page --

CHAIRMAN RAY: So I don't interrupt you again as I've been doing.

MR. BAJESTANI: Sure.

CHAIRMAN RAY: We're particularly interested, I think, or at least I am, in what's showing on this page as -- we're interested in the relationship between all these folks here that you introduced and the blue that's on -- it's blue on my copy anyway, which is EPC contractors.

MR. BAJESTANI: Okay.

CHAIRMAN RAY: So if you could talk about that a little bit. I mean we can see it here on the page, but to make sure we really understand how it works.

MR. BAJESTANI: Sure, let me go ahead and explain that. This project actually we got one EPC, which is Bechtel Engineering, Procurement, and Construction. We do have three major contractors actually that are doing work at this site for Watts Bar Unit 2 completion: Westinghouse and Siemens. Siemens has got all the turbine generator work and Westinghouse obviously all the intricate list. What the all the work that's being done it's done under one QA plan, under one procedure which is Bechtel procedures for engineering, construction, and

procurement.

What we did essentially we have the TVA organization and we -- or Bechtel actually -- Bechtel or us, we basically have a parallel organization. If I have a Construction Manager at Bechtel, we have Construction Manager in TVA, which they actually directly report actually to Construction Manager. Like if you go to the EPC Construction Manager, okay, the EPC Construction Manager reports to Construction Manager at TVA, which is right above it.

CHAIRMAN RAY: Which is not shown here, but you're telling me that's the way it works.

MR. BAJESTANI: That's the way it works, right. The EPC Engineering Manager, which is Bill Robertson at Bechtel, he actually reports to Bill Crouch, which is the TVA Engineering Manager right above him. EPC Procurement Manager at Bechtel, Bill Goodman actually, again he reports directly to our Procurement Manager, TVA Procurement Manager, which is Larry Davenport. The EPC Service Managers, which really has got the Cost, Scheduling, Project Control essentially, he reports and works directly with Ed Freeman, which is our TVA Cost, Schedule, essentially Project Control.

So the Bechtel organization or the TVA

organization essentially we have a parallel organizations, where each position that Bechtel has, we have one position for oversight.

Did that answer your question?

CHAIRMAN RAY: Yes, it isn't the right spot now. But of course, that leads to a lot of detail questions maybe later on, particularly in the area of Engineering, where responsibility needs to be clear.

MR. BAJESTANI: Sure.

CHAIRMAN RAY: And the product that Engineering produces needs to be the responsibility of someone. But I don't want to pursue that any further here now. It's too --

MR. BAJESTANI: We're going to cover that when we get to Engineering. Bill can cover actually how Engineering is set up and what kind of review process we go through for final product and the ownership.

CHAIRMAN RAY: Thank you.

MR. BAJESTANI: Okay, next page is the Project Staffing. Bechtel at this time they have about 730 Engineering. And the TVA side of it for the oversight, we have 55.

Construction, we have about 401 manual and

236 non-manual. TVA, we have nine.

Project Controls, which is again it's Cost and Scheduling, Bechtel has got 82; TVA, we have 15.

Nuclear Assurance, Bechtel has 42 QA/QC type people. And TVA, we have six that they work with Raul.

Supply Chain, Procurement, Bechtel has got 33 and TVA has seven.

Startup organization, which is all TVA, that's one thing that we decided based on lessons learned from Browns Ferry that the Pre-op Startup is going to be all TVA. And it's going to be run under TVA and TVA process and procedures. So that's all TVA. And again the lessons learned was that at the end of the project at Browns Ferry we start losing some key people, key contractors. So we decided that we're going to go ahead and have that done under TVA.

Operations, we have again TVA just 16 people.

And we're looking at -- when we fully staffed the craft side of it, we're looking at about 1200 Construction and a little bit over 600 Engineering.

The way we set up --

CHAIRMAN RAY: What's restraining increase

of staffing right now? Is it the Engineering side just as --

MR. BAJESTANI: The Engineering staff is pretty much we are where we need to be on the Engineering staff. What we're going to be staffing up is really the craft.

CHAIRMAN RAY: I understand. But I meant what's restraining it right now?

UNIDENTIFIED MALE: There was no money up front.

MR. BAJESTANI: What's restraining actually to staff up is we want to make sure in order for us to do construction efficiently we need to make sure that we have a sustainable backlog as far as work. And we don't have enough sustainable backlog. So we are actually working to build that backlog before we staff up.

CHAIRMAN RAY: Sure.

MR. BAJESTANI: Again the way the organization is set up really this organization structure is set up for us to be inclusive and significant oversight over what EPC is doing.

Next page. This is essentially from the time we got this project approved, which we started with the DSEP, Detail, Scoping, Estimating, and

Planning. We did that first which essentially we came up with the cost and schedule for this project. Then after that we went to the Board of Director and we got the Board of Director approve this project. Then we went through the Construction Reactivation Letter, which we have to notify NRC in 120 days before we actually start the construction.

The next activity that we did, we essentially worked for about six months on Regulatory Framework. These are all the open items that we reviewed everything that we thought as open with respect to regulator. We put that together and essentially that was sent to NRC sometimes back.

Then we developed a Detailed Project Schedule, which we call our Dread Zero Schedule. And then we started essentially the construction in July of 2008. We expect to complete major engineering work by end of this year, calendar year.

Next thing is we're going to be submitting our FSAR Amendment and Operating License Update, which we looking at again by March of 2010. One of the major milestones that we have that we're working, and we are on schedule on that, is on the Turbine and Turning Gear. We're looking at October of 2010. And then next thing is we're going to be doing the Primary

Hydro and then Hot Functional in August of 2011. And ready for fuel on April of 2012. And then full power operation, commercial operation essentially, October of 2012. This is a 60 month schedule that we put together from the October of 2007.

MEMBER STETKAR: Masoud?

MR. BAJESTANI: Yes.

MEMBER STETKAR: Since your milestones of completing the major engineering work is now five months from now, how are you doing?

MR. BAJESTANI: On the Engineering side actually we're doing very good actually. We are on schedule on all the engineering delivery. And again Bill is going to cover that aspect of completion where we are now. But so far we haven't really had issues as far as getting the right people to do the engineering work and the product has been --

MEMBER STETKAR: So it's where you expected to be?

MR. BAJESTANI: Yes. And again when I say major engineering, completion is really when we get to November, December time frame. We have about, like I said, 700 some engineers right now working on it. And after that we're actually going to start -- so it's going to take some time to get to completion of

engineering.

MEMBER STETKAR: Whatever that milestone is?

MR. BAJESTANI: Right.

MEMBER STETKAR: Good.

MR. BAJESTANI: Any other questions on this page?

With that I'm going to turn it over to Bill.

MR. CROUCH: Thank you. When we met with you guys back in March, we talked to you about the story of Watts Bar and the condition of Watt Bar. And you expressed some questions and concerns. And so part of what we wanted to do today was to delve a little bit deeper into some of the things that we talked about.

Since some of you and some of the other people here weren't necessarily here when we did back in March, I'm going to digress just a few moments and kind of give a very, very brief history of Watts Bar. Watts Bar was started back in the mid'70s. Construction was under way with Unit 1 being the lead, and then Unit 2 was running about six months behind.

In 1985, we got to the point that there were concerns expressed about the quality of

construction, the quality of engineering. And so we stopped all construction on both Unit 1 and Unit 2 at that time.

From 1985 until 1996 then, we proceeded to resolve those concerns and place Unit 1 in operation. During that time Unit 2 was basically just sitting there with no major construction going on. During the course of that time, in addition to finishing the work on Unit 1, in some cases it required -- it didn't require, but we performed removal of some of the equipment out of Unit 2 in order to supplement the equipment over in Unit 1 when we found things that needed to be replaced. So during the period from `85 to `96, and then from `96 on until now, or up until 2007, Unit 2 was basically a parts supply house for Watts Bar Unit 1 and for Sequoyah.

So part of our task during this time is to assess the condition of the Plant in terms of what's present and what's not present, make all the systems complete, and get the Plant back running.

During that time we also placed the Plant, the Unit 2, in a lay-up status which we maintained until about 2001. The lay-up condition was accomplished by removing sections of pipe, blowing dehumidified air in, making sure all the piping

segments were drained. In some cases we went in and even closed valves. And in order to make sure there was no leakage from unit to unit, we actually went in and installed either like rubber gaskets or polymer seals to completely isolate the two units from each other. So with that type of a situation, then in 2007, we began to work on Unit 2 again.

During the course of the time while Unit 2 was shut down, the Plant did maintain a Removed Equipment List, but we weren't willing to rely upon that as the sole source of information for what was physically out in the Plant. We also needed to ensure ourselves what the physical condition of the equipment out there was. So we initiated a series of walk downs to both go and determine the physical condition of the various pieces of equipment and also determine what was out there.

We spent approximately nine months walking down the Plant. And we did it actually several different times because of different emphasis for the different walk downs. For example, one time we went out and we did a walk down of all the mechanical piping systems, checking what's called the flow diagrams that show the connectivity of the various systems. So we checked to make sure that the drawings

actually represented the systems.

And when we were doing that, if the people detected there was equipment missing, it was recorded on the walk down drawings. Or if they detected that there was damage or degradation out there, it was recorded on the walk down drawings.

We've also done other walk downs for such things as to make sure that all of the piping, the ASME, American Society of Mechanical Engineer, piping systems -- ASME Section III guides this construction. We needed to make sure that all the piping out there reflected the ASME records that we had. So we have done a weld by weld walk down of the entire Plant to verify that the welds are visibly present, that there aren't any additional welds out there, and that the welds that are there are in their as-designed, as-manufactured type status.

We've done other walks, walk downs, looking --

CHAIRMAN RAY: What were the results? Give us some anecdotal characterizations of what you found.

MR. CROUCH: As expected most of the piping is out there. The welds are in very good shape. They found a few cases where there was some

equipment that had been removed that was not on the Removed Equipment List. But that's all -- we've now got it recorded and we were able to find the records. Actually you can trace back and find where in the old work orders where the equipment was removed so that the work is pretty -- it's well documented as it went along.

CHAIRMAN RAY: You were speaking to ASME Section III and the weld locations and so on. In particular did you find any weld joints that weren't on the drawings or anything that would be inconsistent with the requirements of ASME Section III?

MR. CROUCH: I would imagine in terms of weld joints and joints that weren't on the drawing, it was probably less than 10 total. Out of 26,000 -- 27,382 welds, it was probably less than 10 previously undocumented welds. But then we went back and actually found the paperwork for all those. As it turns out we were able to find all the paperwork for everything except 150 out of the 27,382 welds. We found all the ASME paperwork for everything except four out of the 2587 components.

So the quality of the record keeping, even though that the Plant was basically stopped and everybody sent home, the quality of the record keeping

was very good. We were able to find it in the vaults.

CHAIRMAN RAY: And may I assume you dispositioned those very few?

MR. CROUCH: Those few that were not found, they will either be -- in some cases the records that were not found was a case of like a test that was not performed. We can go out and perform those kind of tests now. But other cases if you couldn't find the weld bottom ration sheets or the various ASME paperwork, we'll have to go and physically remove those components and replace them with the proper ASME component.

So as I said, we've been out there and we've done walk downs of the flow diagram and just walking down for the ASME weld and walk downs of the piping and pipe supports for the stress analysis. We've got out and walked down cables. So we have a very, very good idea of the condition of the Plant.

Any time during these walk downs if we found degraded conditions, it was recorded in the walk down and translated into a PER, Problem Evaluation Report, or a 10 CFR 50 -- I think it's B -- type program. And you do a work order and go and either rectify the situation. Or in some cases if the component is such that it cannot be rectified

directly, you would go replace the component.

So overall the process is to go inspect, walk down/inspect, to evaluate and then either rework or replace, depending on what you find.

As we've gone through the process in doing this, in addition to just simply completing the plan, we've also been going through and looking at the Plant in terms of is the Plant properly designed for two unit operation. We've found a few instances of situations where the Plant in its original design would not have been very conducive to a two unit operation.

For example, down in the intake pumping station it was made such that there are two large open bays down there where the pumps take suction from. You have to go in there periodically and inspect the suction areas for these pumps, looking for silt, debris, corrosion on the steel structure, things like that. And the way the Plant was made with the systems dividing, you have to always have two pumps running in each of the two bays if any unit is in operation. So up until now since it's really been a single unit Plant, they were able to do these inspections by simply doing them during refueling outages.

But once you start a two unit operation,

you'll always have one unit in service. So we're having to go in and actually subdivide those two bays so that you can send divers in to do the inspections and clean. So that's the type of thing we've been looking at for a two unit operation to make sure mechanically, electrically, physically everything about it will support a two unit operation.

We've also gone in and looked at what we call our five-year plan. The Plant is always looking down the road as to what needs to be done to upgrade the Plant. So these are modifications that were currently planned to be implemented on Unit 1. So for Unit 2 we've gone in and taken the same list and we're installing the same modifications in the Unit 2 so that the two units will be equal as we go along. Keep them to the point that they are very similar operationally, maintenance wise, etcetera.

We're also replacing all the missing equipment and we're going in and refurbishing the equipment that has not been in service for the last 20 years.

So during your tour you saw that most of the Plant was installed back when we stopped construction. Most of the piping is there. Most of the cabling is there. The instruments are there.

Everything is there. But we're in the process of going through now and inspecting these items and going and doing refurbishments on them.

So if you will turn then to Page 8 of your handout, I've got some pictures here of things that depending on where your tour group went, you may or may not have seen some of these things. But at least I know like the group that we were with, we saw things that were very similar to these, if you didn't see these actual instances.

This is a case -- this picture on Page 8 is the containment spray piping. And this is a place where we've gone in back years ago and removed the section of piping. And you can see the element front hose there on the left-hand side which is having dehumidified air blown into the piping. If you look up into the piping there, it's basically a clean stainless steel type pipe, no corrosion. It's basically an intact, pristine pipe. This is representative of a lot of the piping throughout the Plant. So we found it to be in very good condition even though it's been sitting there for 30 years.

Turn to Page 9. This is an example of where we are going in and removing lots of large pieces of equipment. In this case it happens to be a

centrifugal charging pump in 2 Bravo-Bravo. We physically have removed the pump. We'll send it back to a vendor to be refurbished. They'll go and inspect the insides, replace any material that has been degraded over the years, and then ship it back to us.

You can see there on the right side some pictures of the piping that were attached to that pump. Once again the pipe is in extremely good condition.

As we go and remove components like this, whether it be a pump or a valve or what other piping component you've got, in addition to just pulling out the component itself and doing refurbishment, the other thing we do is look at the pipe in both directions. We go look at it visually. We run bore scopes up and down the pipe, looking to see what the condition of the piping is.

Turn on to Page 10. Here's another instance of where we're showing the craftsmen out removing the centrifugal charging pump 2 Alpha-Alpha. And it's being removed for refusbishment. And you can see pictures there.

Actually if you look on the picture on the left, you can actually see a little bit of debris laying in the pump itself. Stuff like that will be

cleaned out as we go through and the piping will be returned back in good condition. Picture on the right there is of the piping to be attached. So once again the equipment is in very good condition.

Page 11 is typical of what we're doing with dampers. This is an emergency gas treatment system damper. And for this piece of equipment what we do is we pull it out of the system and send it back to the vendor and along the edge of each of the blades has a rubber sealing surface. So the vendor will go and replace that rubber seal. They'll clean it. They'll inspect it and make sure it's operating properly, and ship it back to us ready to reinstall.

So if you turn over to Page 12 then, let me tell you a little bit more about our Refurb Program. Our Refurb Program is proceduralized. We have a procedure. It's Procedure No. -- I believe that's No. TI216, entitled Watts Bar Unit 2 Completion Project Refurbishment Program. The program is basically geared towards looking for any kind of pre-service degradation.

We didn't want to use the term aging because that's a term that is geared with license renewal. But it is basically the same kind of concept. We're looking at the condition of the

equipment that's been out there now for 30 years to make sure that the equipment will be capable of performing its design, its licensing, and its vendor type specified requirements. We're looking at the entire scope of the Plant, both safety related and non-safety related.

We looked at active and passive components. Active components are things like valves, pumps, switches, relays, things that change state. And in this case we've taken this a step further in that you can have some components if you do classical safety analysis where in some cases, like a check valve if it's always closed, it never has to open to respond to an accident, from a safety analysis standpoint, it's classified as passive. But since in some mode of operation a check valve could open and close, we have classified anything like this that has a moving part as an active device. The passive components are things like pipes, coatings, concrete, cables, things that just sit there, things that don't have any moving parts to them.

So as we go through and look at these, we'll be inspecting them, evaluating them, refurbing them, and then finally testing them to make sure that they can meet their licensing requirements, their

design requirements, and meet the vendor specifications.

So in our Refurbishment Program there are basically five steps to it. The first step we had to go through and identify all the equipment. The way we did this was we used our Unit 2 Master Equipment List. The Master Equipment List is a listing of all the Unit 2 equipment. And we formed that by basically starting with the Unit 1 MEL, Master Equipment List, copying it over into Unit 2, and starting to change the unit designators so that we ensured that we had the full scope of everything in the Plant.

Anything that's in Unit 2 -- there are some things that are currently in operation supporting Unit 1. Those types of equipment are the responsibility of Unit 1 right now and they're covering them with Unit 1 maintenance rules. However, we will also be looking at those to make sure that they're capable of supporting two unit operation.

So we went through and identified using the MEL for all the components with UNIDs. And there's approximately 66,000 components in the Unit 2 MEL list.

We also identified types of commodities, I'll call them, or things that do not have UNIDs, do

not have unique identifiers. These are the things like the pipe, the concrete, the coatings, things that are basically the passive type devices. So we're also including those in the procedure.

We then went through and classified these 66,000 components based upon their function code. Look in the UNID number for each device. It will have a number like 2 for Unit 2, dash, and a function code. It's a three or four letter function code. Like FCV is a flow control valve. So based upon those function codes, we divided them up into categories so that we will then address them programmatically on a case by case basis to make sure that we've addressed all the different components.

Once we've gone through and divided them up and classified them, then they start into the process of being inspected, evaluated, and eventually refurbished. For the inspection and evaluation we went to the license renewal, generic aging lessons learned Dahl report and all the various reports associated with license renewal to find out what are the various aging mechanisms that could occur. We looked at situations such as loss of material, cracking, fouling, physical damage, galvanic action, -- if the component was wetted.

There were certain things that if you'll look in these reports that are not applicable to Watts Bar Unit 2. For example, radiation damage would not have occurred because the Plant has never been in operation. Similarly since the Plant has not been in operation, the equipment would not have experienced high temperature environments. So we were going through and looking at all the various aging/pre-service degradation type mechanisms that could be occurring to this equipment and then applying an evaluation process to determine what needs to be done to make sure the equipment will meet its various specifications.

One of the questions that came up during our previous meeting was did you have any pipe sagging. In other words, did you have pipes that were out there installed in the Plant that didn't have adequate supports installed so that the piping might be sagging over the 30 years it's been installed. One of the early things we did was we went in and did a walk down of the Plant looking at the basic configuration and support system. And in no cases did we find pipes cantilevered out, pipes that were tied to the loads that didn't have supports under the loads. So the piping is in good condition both from a

corrosion standpoint and from a dead weight type standpoint.

The electrical equipment -- yes.

MEMBER SIEBER: Have you decided yet what you will do with about the outpacking?

MR. CROUCH: Yes, I'm getting to that here in just a moment.

MEMBER SIEBER: Thank you.

MR. CROUCH: The electrical equipment was not energized so you haven't just seen any breakdown of the equipment. However, we are accounting for the time that -- these cables were installed back from, like I said, in the mid-`70s up until the mid-`80s. They have since been sitting out there. So what we will do is when we do our aging calculations, we will apply a period of time to account for that roughly 30 year period at the temperature conditions representative of what was out in the Plant. That will go into the aging calculations so that that period of time, plus the 40 years of operation, plus the accident conditions will be accounted for.

VICE CHAIR ABDEL-KHALIK: Did the procedure governing this Refurbishment Program, is this TVA specific?

MR. CROUCH: This is a Watts Bar Unit 2

specific. We've written it just for this project.

VICE CHAIR ABDEL-KHALIK: What sort of approval process did that procedure go through?

MR. CROUCH: It was approved by the Bechtel organization and by the TVA organizations.

MR. BAJESTANI: That procedure actually went through Construction, Engineering, Procurement, and Quality Assurance review. So Both TVA and Bechtel side.

CHAIRMAN RAY: Bill.

MEMBER STETKAR: You mentioned cables. Have you -- are -- see if I can phrase this correctly. Do you have plans or is part of the program to do any selective testing of cables that might have been in not fully controlled environments during the last 20 years or so? Selective insulation testing just to confirm that -- I don't mean they were involved in the cables and things like that.

MR. BAJESTANI: Let me address that. And then I'm going to turn it over to Steve.

We did a lot of testing actually part of Unit 1 startup of different cables and what's provided in here. So we have all that test reports. We've actually had a lot of discussion with NRR on the cable, the cable aging, the cable issues. So based on

what we did on Unit 1 essentially we were following the same program on Unit 2.

But, Steve, do you want to address any specific?

MR. HILMES: Yes, Steve Hilmes, Engineering with Watts Bar 2. We will be doing pipe potential test on all medium voltage cables and they will be Unit 2 specific. I'm sorry, safety related cables. We will be using DOM testing. The coaxial cables that we reviewed will all be replaced - they will also -- those are the two cable types --

MR. BAJESTANI: Okay, good.

MEMBER STETKAR: Thank you.

MEMBER SIEBER: At either unit at Watts Bar do you have an issue of submerged area cable, medium voltage cables?

MR. BAJESTANI: Go ahead, Steve.

MR. HILMES: Yes, at Watts Bar all the cable that is buried underground as safety related is already turned over. However, we have testing on those cables and the testing results pretty much shows that they're like new cable. Essentially Watts Bar has always been able to pretty much maintain the cables dry so issues --

MEMBER SIEBER: Now for Unit 2 cases

probably have not involved controls for those once they're buried and --

MR. HILMES: The only medium voltage cable that we have buried that are Unit 2 specific are the surf water pumps and we will actually also be doing DOM testing on those.

MEMBER SIEBER: Those are non-safety?

MR. HILMES: They're non-safety, right.

MEMBER SIEBER: Okay, thank you.

MR. CROUCH: One of the other questions that was brought up when we met with you back in March was this. And I think it was Dr. Sieber brought this up and made a statement that -- I'm not sure. It may have been somebody else. That we talked about our lay-up program, the fact that we had one, but it wasn't a -- wasn't maintained over the years completely. And the question was brought up -- or the statement was made that a bad lay-up program could have been worse than no lay-up program at all.

What we're doing to address that is that we're actually going to go out and perform chemical swipes to determine if there's any type of substance that has been introduced into the inside of the piping system. We will perform swipes on cables. We'll be looking to see if there's any type of deleterious

chemicals on the surfaces, to see if there's anything that could be activated once we start operation.

So when we start into the process of refurbing or replacing, as I said, the list is based upon the Master Equipment List. And we have a very voluminous, detailed procedure that goes through function code by function code for what you do with each different type of equipment.

Do you have a question?

MEMBER SIEBER: Yeah. I don't want to interrupt what you were saying. But when we toured the Plant, I noticed a lot of foreign material exclusion covers installed in different places. But they looked new to me. I take it the insulation of those covers is recent. They really haven't been on for the time the construction was suspended. Is that correct?

MR. BAJESTANI: Brian, do you want to address that?

MR. BRIODY: A lot of the covers --

MR. BAJESTANI: Use the microphone, please.

MR. BRIODY: Brian Briody, Maintenance and Mods Manager. I've been at the plant since 1983. When we laid up Unit 2, or when we discontinued the

lay-up program, a lot of the -- covers that were put down were plexiglass or wooden covers. And we since find out that there were the -- covers. As you see, we've gone over and replaced a lot of the wooden ones with -- some of them were put down with tape. Some were put down with strings or put down with padding. Replacement ones that are recovered --

MEMBER SIEBER: Would it be fair for me to believe that there were no extended periods of time when some kind of -- exclusion barrier was used? Or did the old ones fall off or rot away? And you came back in 10 years and said we ought to do something about that?

MR. BRIODY: I think it would be fair to say that the vast majority -- there would be exceptions -- the vast majority had covers on them. Maybe you noticed some of the instrument panels out there had sheet metal covers. But it was a very extensive effort to protect the equipment on Unit 2, both during the lay-up. And when we stopped laying it up, just stopped, we didn't go out there and do anything to prevent the covers we had --

MEMBER SIEBER: Thank you.

MR. BAJESTANI: Besides obviously the FME cover that we have is preventive. But the process

that we have, the process and procedures that we have, we're going to have to flush every one of the system part to the pre-up startup. So there is another layer here that we want to make sure that there's a cleanliness requirement. After we flush we have to get to certain level to declare the pipe is clean, you know.

MEMBER SIEBER: Thank you.

MR. CROUCH: So as we start through the refurb replacement process, as I said, the list is based upon MEL as a very large procedure that goes through the bifunction code and looks at each particular piece of equipment. It goes in and cleans it, inspects it. It replaces any type of soft components: gaskets, seals, diaphragms, etcetera. It'll lubricate it. It'll verify that it's working properly. As we pull one of these pieces of equipment out to do this, as I said, we will boroscope in either direction to make sure that the piping is in good condition. So that once a piece of equipment has gone through the refurbishment type process, it'll be restored to a like-new condition. It will be fully functional, fully operational.

VICE CHAIR ABDEL-KHALIK: The starting point is the MIL for Unit 1.

MR. CROUCH: MEL.

VICE CHAIR ABDEL-KHALIK: Okay. Is your expectation that at the end of this process Unit 2 will be identical to Unit 1?

MR. CROUCH: It will be very, very close. In a few cases you cannot buy the same pieces of equipment as what was bought back in the 1970s. But for the most part you may not be able to buy a brand X valve, you have to buy a brand Y valve that functions the same way. So I would not say it is identical. But from a maintenance standpoint, from an operational standpoint, it would be as close as we can make it. That's one of our charters going into this. MR. BAJESTANI: I think is your question is as far as valve number 599 in Unit 1 is going to be same number 599 in Unit 2? Is that what you're asking or you were asking actual physical condition?

MEMBER SIEBER: Physical.

VICE CHAIR ABDEL-KHALIK: Well, I mean if there is going to be a difference, I'm not sure if functionally a different piece of hardware will be identical to what you wanted to have based on the Unit 1 list. And I just wanted to know how you catch these differences?

MR. CROUCH: We have a process. If we run

into a situation where we cannot do an exact like-for-like replacement, it then has to go through a design change. The Unit 2 design change process is what called an EDCR, an Engineering Design Construction Release. And one of the forms that you have to fill out is what's called a Unit Difference Form. And it looks at both maintenance differences and operational differences.

So if you had to install a different type of component, different brand that had different maintenance characteristics or operational characteristics, you have to fill out the form. Maintenance has to acknowledge it. Operations has to acknowledge it. That form is then provided to the those organizations and to the training organizations through the -- training process.

VICE CHAIR ABDEL-KHALIK: Thank you.

MR. CROUCH: In addition to doing all the refurbishment, we are replacing the safety rate instruments in the plant. We're replacing all the generic letter 8, 9, 10 operators in the plant. And we're replacing many of the major control systems in the plant -- the reactor protection system, the rod position system. A lot of the major control systems are being replaced brand new which is presenting a

challenge because they're brand new, but we're replicating the old designs. So that's been quite a challenge to get some of the old equipment like that.

MEMBER BROWN: So you're not shifting to digital. You're sticking to analog?

MR. CROUCH: Right. Once we get done with all the inspections, evaluations, refurbishments, and replacements, then, as Masoud said, we go into a phase of testing and flushing. Our test program will be a full REGI 1.68 test program.

In addition to that, we'll be pre-op testing all the non-circulating side of the plant. We'll be flushing the equipment to make sure that the cleanliness meets our various standards. We're actually going to sample the water through the first flushes and continue sampling until it meets our required cleanliness factors. And when we get done, our required objective is that the Plant as a whole has to be able to meet the design, licensing, and vendor specifications.

So if you'll turn on Page 13, I'll give you an idea how many components we're talking about in the refurbishing process. There's some numbers there -- pumps and motors and breakers and valves, etcetera. This is just some of the various types of items we

pulled out. Nowhere near all the equipment in the Plant.

MEMBER SIEBER: Actually for a Plant like that, the number of manual valves is 16,000 or 17,000. Motors and pumps is 600, 700 range, I guess. Is that your -- these estimates take into account your current estimate of what's deteriorated to point that would require replacement?

MR. CROUCH: Right.

MR. BAJESTANI: We actually went through this, like Bill said, Master Equipment List. We have 68,000 items that we have to do something.

MR. CROUCH: Right.

MR. BAJESTANI: Out of the 68,000, we went through and we figured out what we need to do on refurbishment. Which one needs to be replaced. Which one needs the packing, change out. Just to give you some idea, this doesn't really list everything. Probably be a good idea just give you one system. One page of one system tell you really what we are doing back on container spread.

Jerry, maybe you want to just give everybody a copy of the container spread. Show them what are we doing on one system alone. Just one page.

MR. SCHIESSEL: Sure.

MR. BAJESTANI: What are we changing out?

MR. SCHIESSEL: Jerry Schiessel, TVA Construction Manager. This page spread is about 441 components on the current Master Equipment List. The printout that's being distributed is one of the 21 page printouts showing an example of components and what we're doing to them. You see at the top, you see some -- Operators. That's an EDCR process -- as and engineering process.

Going on with the page, you'll see that we did find errors in the system. Those are -- I'm sorry. You'll see some pipe orifices. Those will be checked in our testing process. Next group of items are indicators in the instrumentation process. Those indicators will be tested, verified to be functioning propertly, and put in service.

And towards the bottom of the page, you'll see the last couple of items are the pumps. You saw the pictures of the pumps. Those are being reworked onsite, including rebuilt. Components, all the age related components, are being replaced. And we went through every UNID on the system making replacements. Complete the -- replacements, 99 part replacements. Another 105 change-outs by our engineering change process. Inspections of 123. Functional checks on

17. Startup check point control items. Only check the startup page. Everything else was checked on the ratings -- on equipment how it functions. Then start talking about areas. Go through and do identify areas that our equipment - get those things corrected.

MEMBER SIEBER: So what you're really saying is that every -- testing, startup test program. As you identify some that don't meet the requirements, then in addition to that you have approximately 10 percent where you already laid out some of the additional inspection program to determine whether these refurbished or not. Am I interpreting what you're doing correctly?

MR. SCHIESSEL: The only thing I want to give you a feedback on is right now this particular system has everything that's an active component pre-tested before we start the program.

MEMBER SIEBER: Yeah.

MR. SCHIESSEL: Only about 10 percent --

MEMBER SIEBER: Yeah, that's -- whether it's delayed or not. Okay.

MR. BAJESTANI: Did he answer your questions? Or do we get to go a little bit further?

MEMBER SIEBER: Yeah, I think so. I have enough understanding now.

MR. BAJESTANI: Okay.

MR. CROUCH: So if you'll turn on to Page 14. We just gave you some examples here of what we're doing. This is a picture of a we call it a diaphragm valve. We'll be going in and for the items that are marked there on the right side in orange and blue, we're replacing the diaphragm. We're replacing the O-rings. And the rest of the parts in it are metal. They wouldn't be replaced. But we'll be disassembling the valve, checking it out to make sure it properly functions.

Turn on Page 15. There's an example of the bonnet off of an ASME 12-inch swing check valve. On this particular one, you'll see it's a place where we found that there are some -- on the right hand side, there are some gouge marks. We'll be going and looking at those, evaluating them in terms of significant gouges. If required, we'll either repair it or we'll replace the bonnet, whatever it takes to make a ASME compatible component.

MEMBER SIEBER: Yeah, but that's not an aging effect?

MR. CROUCH: No, it's not an aging effect. That's just physical damage that occurs.

MEMBER SIEBER: Could have been an

installation, manufacturing --

MR. CROUCH: That's right.

MEMBER SIEBER: This could have been shipping and storage?

MR. CROUCH: That's right, exactly. So we haven't tried to restrict this to just aging type phenomena. In some cases, like, for example, when we're out doing the ASME walk down looking for the weld, we recorded arc strikes, gouges, corrosion, anything that was off normal we recorded on our sheets and we'll be addressing that.

MEMBER SIEBER: Now that's important to do that. That's required by the federal --

MR. CROUCH: Yeah, that's correct.

MEMBER SIEBER: Thank you.

MR. CROUCH: Page 16 there is an example in this -- in Jerry's procedure for doing his refurbishment. This is just one of his many check valve -- or one of his many data sheets. This one is for a check valve. You notice down there about a third of the way down the page it does an operability check. Looking to make sure the valve operates freely.

You'll also see down there where it's all the various things to determine wear checks on the

right-hand side. So they go check for all the loose parts: things like the cotter pins, the retaining clips, etcetera. So they go through and make sure that the valve works properly and that all the small piece parts associated with are present and working properly.

Turn over to Page 17 then. Picture of an air operated valve. And the components that are subject to refurbishment are the diaphragm and the valve packing.

Turn over to Page 18 there. There is a schematic of the air operated valve. It's not the very same one reported on the previous page. But it is a representative type schematic. And you can see there the items that are marked on the right- hand side in the colors. We're replacing the diaphragm, the gaskets, the o-rings and the packing rings. They'll also be once again cleaning and inspecting the valves and making sure it operates properly.

MEMBER SIEBER: To do all this -- this is a lot of work.

MR. CROUCH: Yes.

MEMBER SIEBER: A lot of man hours.

MR. CROUCH: Yes.

MEMBER SIEBER: Okay, thank you.

MR. CROUCH: Page 19, once again, this is an example of the procedure for the air operated valve refurbishment. There on the left-hand side talks about things that are replaced. The right-hand side talks about the various adjustments. And you'll see that each one of these sheets has a sign-off by a Field Engineer to ensure that in its as-left condition it meets these requirements.

MEMBER BROWN: You got an item listed on here that says, "Regulator replaced setting verified." And there's a box that's checked. If that's a quantitative value, the setting has to be verified. Why isn't the required value specified and a number that they actually got written down?

MR. BAJESTANI: Every one of these components that is actually specific procedures step by step, especially on the safety related with QC verification for all the settings.

Jerry, you want to confirm? Okay, yeah, go ahead.

MR. SCHIESSEL: Jerry Schiessel, TVA Construction. If you note the -- he used actually a 59-page figure; he just took one page to give you an idea. But just as Masoud pointed out, all those readings that we inspect are included in this 59-

pages.

MEMBER BROWN: Okay, so the actual values that you expect, the actual quantitative value is written down so somebody can audit that and see that --

MR. SCHIESSEL: That's correct.

Mr. SIEBER: I don't know how you folks -- a lot of plants use what they call a scaling manual which has all the set points for everything. And they don't appear in the calibration procedure, refurbishment procedures. You have to go to the scaling manual to get them. That's where that information was taken.

MR. CROUCH: Let Steve answer that.

MR. HILMES: Steve Hilmes. What we do here is on non-safety instruments, we -- the set points and so forth are actually in our Master Equipment List.

MEMBER SIEBER: Okay.

MR. HILMES: Where safety related or tech spec instruments, we have rather detailed scale in some of the documents.

MR. CROUCH: Those scaling and set point documents are design output documents that relative to design change process.

MEMBER SIEBER: Yeah, what you did is similar to what I've seen through most of the industry.

MEMBER STETKAR: Bill, just out of curiosity, this is pretty much out in left field, but the photograph of the valve back on Page 17, do you happen to know where that valve -- what system that valve came out, where it was?

MR. CROUCH: Jerry.

MR. SCHIESSEL: Page 17?

MEMBER STETKAR: Yeah, I mean it's an air operated valve. I'm just curious.

MR. SCHIESSEL: Jerry Schiessel. That particular valve we're looking at is on our heater drain system.

MEMBER STETKAR: Heater drain. Okay, thanks.

MR. SCHIESSEL: It's a non-safety valve.

MEMBER STETKAR: Thank you.

MR. CROUCH: Let's move on to Page 20. Here's a picture of a manual valve. Once again we will be replacing the valve packing shown on the right-hand side of the components shown in pink there.

Flip the page to Page 21. There's once again an example of a page out of a procedure for

checking valve packing. So our overall process for doing this refurbishment is a proceduralized process driven by the upper tier procedure for refurbishment. And then there's lower tier procedures like the page we're looking at here that actually perform the refurbishment activities themselves to do the work orders.

Any other questions on this aspect?

MEMBER SIEBER: Yeah, you probably have 15,000 or 16,000 valves that have packing in them of one sort or another. Are you going to do a pressure test?

For example, a valve is just sitting there at ambient temperature. The packing is sealed by all the surfaces. So you're aren't going to have oxidation. You aren't going to have heat as a problem. Are going to do something to say I've got to repack that valve and I don't have to repack this one over here?

MR. CROUCH: Yes, we have a criteria.

MEMBER SIEBER: What criteria?

MR. CROUCH: Yeah, we're going through a criteria. There's four criteria that we start through. One of them is see if the valve sees condenser vacuum. Because you can't tell that valve

is leaking as such.

MEMBER SIEBER: Right.

MR. CROUCH: If it's contained -- contains contaminated fluid, you don't want it to leak--

MEMBER SIEBER: Okay.

MR. CROUCH: -- contaminated stuff.

If it's a high energy system greater than 275 psi or greater than 200 degrees, or if it's inside the polar crown wall, because you can't get to that during operation.

MEMBER SIEBER: Okay, those are the four criteria?

MR. CROUCH: Those are the four criteria. And then you go through and test the systems. And if you find something else that's leaking.

MEMBER SIEBER: You fix it.

MR. CROUCH: You observe it; you go fix it.

MEMBER SIEBER: I think that's good criteria. And I knew that you had to have something to cut down on the volume.

MR. CROUCH: That's right.

MEMBER SIEBER: Or you'd be here forever.

MR. CROUCH: That's right.

MEMBER SIEBER: Okay, thank you very much.

MR. CROUCH: You're welcome. Okay, let's turn on Page 23 (sic) then. In addition to the process of refurbishing the equipment that was installed out there back during the `70s and `80s, we have also taken upon ourselves several improvement initiatives. And I've just outlined a few of them here. And I want to kind of walk you through what's in this list here.

These are things that either are improvements over the what's in Unit 1 in terms of our processes, or they're improvements over the timing of when things were done compared to Unit 1. Or they're things that we're doing early for such things a dose reductions.

The first one on the list is Reduction of Appendix R Operator Manual Actions. We're going to do that. And rather than taking the 160 manual operator actions that Unit 1 has, we're going to reroute cable to eliminate some of these actions. In some cases you cannot eliminate all of them because of the physical proximity of the end devices. But we're looking at the devices to see where we can eliminate operator actions.

We will have replace all eight ERCW pumps. This our essential raw cooling water pumps that

provides the safety related raw cooling water to plant. The pumps as originally installed did not meet the original vendor specifications. So we're going in and replacing them back so that we have adequate margin for two unit operation.

We're taken an approach to go and replace piping that's susceptible to FAC, flow accelerated corrosion. Any piping that was replaced in Unit 1 during the first two refueling outages, we're going ahead and replacing it preemptively so that we don't have to wait until the Plant is in operation and do it during an outage.

MEMBER STETKAR: Are these check works on --

MR. CROUCH: We use check works and back manager. Once you get past about the first two refueling outages, you find that FAC is kind of geometry dependent. So you can have a situation where in Unit 1 you had some FAC damage to a certain line.

CHAIRMAN RAY: FAC is flow accelerated corrosion.

MR. CROUCH: Flow accelerated corrosion.

MEMBER STETKAR: And I recognized the acronym.

MR. CROUCH: So you can have a situation

where you had FAC damage in Unit 1. But just due to very, very slight geometric differences between the two units, you may not see that FAC same damage over in Unit 2. And so if it experienced damage during the first two refueling outages, it's probably not geometry dependent. It's probably just system flow dependent. But we're preemptively going -- we'll replace that type of piping. We're replacing it with two and a quarter percent chromoly which should last the full life of the Plant.

The glycol chillers, we're replacing all 10 glycol chillers for two reasons. One, because the federal regulations on freon. Second one is that the glycol chillers just do not perform well enough to support two unit operations. So rather than trying to upgrade our existing chillers to match to meet the two unit operations but then still have the freon problem or vice versa, we're replacing them with the proper type of coolant and with proper capacity.

Now the switchyard, we're installing a double 500 kV breaker arrangement to increase our reliability.

We're adding the zinc injection system to pacify the fuel rods and steam generator tubes. This helps eliminate some of the crud problems in the

various locations.

The Plant as it was originally installed has got two train ERCW system. Each train has got a strainer in it. Well, the way the piping is configured, you cannot go work on a strainer with that train in service. So we are installing bypasses so that we can jump from train to train to get around it so we can do on-line maintenance on the strainer and still be able to get adequate flow to the operating units.

We retubed the main condenser using the C-Cure stainless steel. That will eliminate copper from the system to help on the steam generator light.

As I talked earlier, we are installing a barrier inside the intake pumping station.

MEMBER SIEBER: Are you going to use C-Cure in your condensers?

MR. CROUCH: Yes.

MEMBER SIEBER: And what was originally in there?

MR. CROUCH: Copper.

MEMBER SIEBER: C-Cure is pretty flexible material. Do you expect that your distance between your tube support plates between the two-sheet tube support plates going to be such that you're going to

get vibration damage because of the change of tube material?

MR. BAJESTANI: I'm going to explain a little bit. And then I'm going to turn it over to Brian.

We actually decided the tube supports we ending up staking every one tubes to make sure we don't end up getting the vibration.

MEMBER SIEBER: You've done this in Unit 1?

MR. BAJESTANI: We did that on Unit 1. And we just completed that on Unit 2. But Brian --

MEMBER SIEBER: I was just going to say you're going to have to stake them.

MR. BAJESTANI: We staked them.

MEMBER SIEBER: Because the vibration --

MR. BAJESTANI: Exactly. We did that --

MEMBER SIEBER: Particularly around the top.

MR. BAJESTANI: That's right. That's exactly what we did.

Brian, you want to expand on that?

MR. BRIODY: Yes, Brian Briody, Maintenance and Modification. They are 15-foot long. We have installed these tubes in Unit 1 --

generators. It went very well. We do have tube supports -- about two and a half to three feet apart throughout its length. And then they are staked --

MEMBER SIEBER: When did you retube Unit 1's?

MR. BRIODY: Spring of 2002 or 2003. And they're coming out in September on Cycle 9 when they --

MEMBER SIEBER: Okay. Thank you. So you were already aware of these conditions. Thank you.

MR. CROUCH: On the pressurizer, there are six dissembler metal welds for the various nozzles coming in and out of the pressurizer. We're going to apply the Mechanical Stress Improvement, MSIP, process to these welds to place the interior surface of the welds impressive stress. That eliminates the problem with the IGSCC. We're adding an additional offsite power source for reliability.

We've gone and replaced what's called the split pins inside the reactor. We're doing this prior to actual operations so we can do this in a low dose type environment.

As we -- at least with the group that Masoud and I were with, we talked about reduction of pipe support snubbers out in the Plant. We eliminated a large

number of snubbers through our analysis that would improve the maintenance aspects of the Plant.

We also are --

MEMBER SIEBER: The split pin replacement, you're able to do that hands on as opposed to all kind of remote tools.

MR. CROUCH: That's correct.

MEMBER SIEBER: Is that job done?

MR. BAJESTANI: We just completed. We completed that actually about June. We finished it in June.

MEMBER SIEBER: When you were retracting the original pins, did any of them break?

MR. BAJESTANI: Pete, you want to get that mic?

MR. OLSON: Yeah, I don't recall any reports of breakages. We had a few minor -- but -- but I don't recall any broken splits.

MEMBER SIEBER: The split then --

MR. OLSON: That is correct.

MEMBER SIEBER: Okay, thank you.

MR. CROUCH: In order to address the generic Safety Issue 191 of containment sumps, we're installing the new containment sump screens just the same way as Unit 1 is installed already. Down there

in the lower sump area, the existing sump screen cover, we removed. And this very large screen will be installed. We had pictures that we showed you while we were down there.

Initially the things on the page and some of the other things that we're doing, we're going ahead and performing the same modifications that Unit 1 has either already performed or is performing this upcoming outage for the ECCS gas accumulation for the preventing. As we talked about on the tour, we're installing the new low pressure model block rotors on the turbine that will improve the performance of the turbine. But it will also improve the reliability for the turvissile (phonetic) analysis.

MEMBER SIEBER: What manufacturer in terms of --

MR. CROUCH: Siemens.

MEMBER SIEBER: Siemens?

MR. CROUCH: Siemens.

MEMBER SIEBER: And you say you're changing the low pressure blades along with the rotors?

MR. CROUCH: The rotor, the blades, everything is being replaced.

MEMBER SIEBER: So you end up with a more efficient --

MR. CROUCH: Yes. The result of changing out the high pressure turbine, the low pressure turbines, and the morcha (phonetic) separator reheaters we'll pick up about 50 megawatts of electric for the very same reactor from the power.

MEMBER SIEBER: You're adding just a little more efficiency?

MR. CROUCH: Right.

MR. BAJESTANI: Right.

MR. CROUCH: In addition, we're revising our PSA so that it'll be REGI 1.200 rev one compliant. We'll also meet the ASME standard. During this process we're also converting the PSA over from Brisman to CAPTA, which is the same computer process that the NRC uses. So it will be easier for us to converse on it.

This is just a few of the things that we're doing to improve the plant. In order to do things up front early so that we reduce those improved performances planned.

We'll turn over to Page 24 (sic). Overall engineering is approximately 46 percent complete. The design modifications are --

MR. BAJESTANI: This is Page 23 by the way, Bill.

MR. CROUCH: Twenty-three?

MR. BAJESTANI: On our copy.

MR. CROUCH: Okay, 23. Overall the engineering is probably 46 percent complete. The design modifications are 55 percent complete. And calculations are 76 percent complete.

We're also going through what's called the Corrective Action Program and Special Programs. As I talked about earlier, that the -- back in the mid `80s when the plant was shut down over concerns about construction engineering, this resulted in a document that was what's called the Nuclear Performance Plan. And it was a document that applied -- has four volumes in it. Volume I applies to the Management issues within TVA. Then Volumes II, III, and IV apply to Sequoyah, Browns Ferry, and Watts Bar.

Within the Volume IV, which applies to Watts Bar, you will find various types of programs described. Some of them are the very large programs. They're what's referred to as the Corrective Action Programs. And others that are just slightly smaller are what's referred to as Special Programs. These are things like cable issues, seismic issues, modern energy line break issues, design based line verification program. Programs that relate to either

construction or engineering type activities.

Overall we are about 40 percent complete on addressing the actions required to identify the pieces of equipment that had to be replaced or the calculations documentation has to be revised.

MEMBER STETKAR: Bill, you explained this in March and I forgot. Is there any other substitutes between the Corrective Action Programs and the Special Programs?

MR. CROUCH: No.

MEMBER STETKAR: Other than --

MR. CROUCH: It's just the size.

MEMBER STETKAR: Just the size, okay.

MR. CROUCH: Right. So we're going through each one of those programs. We're in conversations between Watts Bar and with both the Region and NRR. We're going through and creating what's called the Implementation Plan that describes how we're going to go about and solve the issues.

As the document progresses, as the work progresses, the Region is coming in. The NRR is coming in and looking at what we are doing from both a paperwork standpoint and a field standpoint to make sure that they agree with what we're doing. So it's a process that's going along as we go that basically

everybody agrees. We don't get to the end and then have a disagreement over it.

One of the other things that we've done is in order to ensure that we have picked up all the concerns that was created when Watts Bar Unit 1 was stopped and then eventually construction completed, we have gone back and what we refer to as our Historical Document Review. We went into the records and pulled up any type of document that had to do with -- I'm on the wrong thing here. Historical Basis Quality records. This is looking to make sure that our quality records were in place.

Like I referred to on the ASME records how we've gone back and ensured that we could find all the paperwork from the various vendors that came with the components. We've gone back in to prove that we've got our calculations in place. We've gone back and proved our drawings are in place. Make sure they're legible and they're usable.

There's been a few things that we have found that that are not there. So we're having to go recreate those. But for the most part, we have found nearly every record either in the vault or on microfilm. So overall we're on track to complete the major engineering by December of this year.

You asked earlier about how TVA is ensuring or interfacing with the contractor. As Masoud talked about, this is an EPC contract, such as they are responsible that their products are correct. But on the other hand, we as TVA as the owners, we're going in and doing an oversight of all the products that they do. We don't review everything a 100 percent. But we go and review first time type documents, first time type processes. And then do a sampling, looking at the products as they go along to make sure that they're following our design standards or following the various regulations.

As we go through and do a review like that, if we find a problem, we write monitoring reports that goes up through the Nuclear Assurance organization. We also write PERs, Problem Evaluation Reports, documenting anything we find.

So is that --

CHAIRMAN RAY: Bill, in most circumstances where there's not a change in responsibility between the parties involved and the project, whatever roles and responsibilities each party has at the beginning, they execute and deliver on through the course of the project. The owner has his role. The EPC contractor has theirs and so on.

So while there's nothing about what you just said that one could take exception to, the real underlying question -- and I'm not sure how to grapple with it -- is the change that has occurred. Because it's not enough, I don't think, to simply say, "Wow, we're conducting this oversight." But you're actually conducting oversight for somebody who's doing work that you yourself began and now they're carrying on.

And it's that change that is, I won't say unique, but different. Maybe it's happened before. But how that is carried out, I don't really know how to pose the question other than trying to put myself in the place of your EPC contractor and imagine how I would -- what I would think I was responsible for coming into the project as is the case here.

So anyway, I'm just responding to to your question. Does that answer -- well, it tells me what you're doing. And that's reassuring to a degree. But there's still a need to somehow come to grips with the fact that there is this transition that has occurred. So that's the answer to your question.

Now I'll ask you a question which is, I take it that the -- it seems to me like what you've described would eliminate the possibility as best it can ever be done that there would be any deficiency

remaining in Unit 2 which was a legacy of the problems that led to the shutdown of both units and then was presumably corrected in Unit 1, now would be addressed in Unit 2. There's just nothing I can see here that would slip through the cracks as you described or at least as I've understood it stated.

MR. CROUCH: And I was actually jumping the gun. That's discussed a little bit more on the bottom of the next page.

CHAIRMAN RAY: Oh, is it? All right. Well, it would seem like it fit here. But, okay, that's all right. But anyway, to answer your question, at least I hear what you're saying. And I don't have any problem with what you're saying personally. I just can't yet figure out how this rather profound change is taking place. It's as if you guys still have the same responsibility you always did have for the design. It's just that somebody else is executing it now rather than TVA. And yet you're involved enough to still be responsible, I guess.

MR. CROUCH: Ultimately, we are --

CHAIRMAN RAY: I don't want to put words in your mouth. But that's basically what I'm grappling with.

MR. BAJESTANI: Yet, I understand what

he's talking about on the change. You know the EPC contractor, they're doing the work independently. They are doing, but I guess we, the TVA side, has the oversight. We still the owner. We still responsible for licensing this plant. So we got to make sure what comes out of the EPC or any other contractor is accurate and correct. So that's --

CHAIRMAN RAY: I know. I've been in that role too, Masoud. I understand the responsibility that you feel. And it's very, very important. But again, what's not really being understood at least from my part is how something that I myself was doing before is now going to be carried on and completed by somebody else under my oversight.

It's not that there's any -- inherently any reason why that can't work. I'm just trying to figure out where that may lead to any problems. I don't have any to share with you or I would. But it is a change. And that's what -- that's worth thinking about.

MR. BAJESTANI: Right, it is a change. But you know we go back to look at some of the lessons learned from early `80s when we were building some the units and we stopped the construction because a lot of issues. What we have learned is basically we can't

just turn over the key and say we'll go make it happen.

CHAIRMAN RAY: That's right. No, you seem to be well involved. I'm speaking just for myself. But I have nothing to suggest in the way of anything, omissions or any lack of oversight. But you asked a question, are we satisfied? Well, at least from my part I'm still pondering what is a very unusual change in responsibility. And I try to put myself in the shoes, as I say, of the EPC contractor and ask myself what am I really responsible for here. And I'm not sure I have a complete satisfactory answer.

VICE CHAIR ABDEL-KHALIK: Let me just try to understand this. The design engineering function of TVA is exclusively or primarily oversight; is that correct?

MR. CROUCH: That's correct.

VICE CHAIR ABDEL-KHALIK: Now judging by the number of people involved, roughly seven percent of the effort is focused on oversight. Is that a typical percentage time for complex engineering systems?

MR. BAJESTANI: The seven percent that -- you just looking at the number of Bechtel versus TVA --

VICE CHAIR ABDEL-KHALIK: Right, right.

MR. BAJESTANI: We actually have some data from other utilities that are looking at building new units. And they're looking at the organization that they want to set up. The one that actually actively involved, we have looked at their number, our number. It's pretty much -- I actually have a table shows that our number is pretty much what the other utilities are using.

MR. ADBEL-KHALIK: This number seems a little low to me considering the fact that you're doing a bit more than just simply oversight.

MR. BAJESTANI: Correct.

MR. ADBEL-KHALIK: So the question is, how does that compare with data that pertain to complex engineering systems in terms of design engineering and oversight.

MR. BAJESTANI: The one thing you got to remember here for Watts Bar. Really the design of this Plant, it was done. FSAR was done. So what we are doing, we are going back and actually verifying what was done before it's correct. So it's not that we are starting from scratch to do a new design. So there's a big difference between when you're looking at building a new unit versus what we are doing. The

FSAR design of both units were complete. The design basis are good. What we are doing is confirmation of going back and verifying what we had is okay.

CHAIRMAN RAY: Well, I think that's right. It is, as you yourself said and as I said, it's different. And we're trying to just understand what that difference might any things that would be unanticipated consequences of that difference, okay.

MR. BAJESTANI: I understand. Okay, if there are no other questions, I guess we're going to take a 10-minute break. Or however you want to handle it?

(Laughter)

CHAIRMAN RAY: I'll take care of that for you. Let's make sure.

MR. BAJESTANI: Let's move on?

CHAIRMAN RAY: Let's make sure first of all. We'll take a break. But let me decide when it's done.

Let's see if there's other members that have any other questions on this phase of the discussion. We can be late, but we can't be early. It's the rule.

Anybody else have any?

It's a 15-minute break by schedule. But

so one of the members thinks that's a good idea. And so we'll stick to that. We'll reconvene at 2:45.

(Off the record at 2:30 p.m. and reconvened at 2:45 p.m.)

CHAIRMAN RAY: We solved I think -- I think we've solved our feedback problem. And we can resume. The agenda will proceed as outlined. Albeit, it's now running some 17 minutes late. That's not unusual for us. So Joe or Bill or Masoud, whoever is going to take a lead here, please.

MR. CROUCH: It'll be myself. If you'll turn the page then to the page that's entitled Licensing. When we started this project, our licensing group met very closely and regularly with both NRR and Region and created what's called the Regulatory Framework letter.

This is a letter that goes through all the issues related to the startup of Watts Bar Unit 2. And it addresses the basis for what it's going to take in order for both TVA and NRC to agree on the issues. It looks at such things as the FSAR sections; generic communications such as bulletins, generic letters, etcetera. And it looks at all the Corrective Action Programs/Special Programs to come up with a plan for what's going to have to be done for each one of them

in order to close it.

This was a follow-up, a fallout, of the way we did this at Browns Ferry Unit 1. And the difference is we got the NRR people much more involved this time than what we did the first time, so that it should be a better document and a smoother process that what we even had for Browns Ferry Unit 1.

Basically we're following the precedent set by Watts Bar Unit 1 in terms of its licensing basis, design basis, etcetera. That we're not requesting any new exemptions. We're following the same processes.

For the FSAR, as Masoud mentioned, the FSAR was basically completed for Unit 1 and 2 back in 1995. But we're in the process of updating that FSAR for Unit 2 to account for all the modifications that we're doing in Unit 2. We are modifying Unit 2 such that it won't be the very same Plant that Unit 1 was at original licensing. Instead we'll be licensing it as Plant with the original design plus all the various modifications that Unit 1 has done over the last 11, 12, 13 years. So that at the time of Unit 2 licensing, the two units will be identical as we described it.

So what that means is you have to go in

and take the 1995 Unit 2 FSAR. First of all go validate that the plant meets that document still. And then incorporate into it any of these other modifications that we're performing in order to keep the two units consistent.

There's a process we've gone through of showing the deltas between the 1995 FSAR and the current Unit 1 FSAR. And then we're addressing those in the series of submittals that are planned over the next -- we've already had one in April. There'll be another one coming in August, one in November, and then one in January. So once we get that submitted, then the -- that will be the basis for the licensing of the Unit 2.

We've also submitted what we call templates for the tech specs. What these are, we've taken the Unit 1 tech specs and we've submitted them and says that our Unit 2 tech specs will look like this. And we've basically taken the Unit 1 tech spec and used it. But we blanked out all the unit specific set points. And so over the course of the next few months as we complete those calculations, we'll be supplying those Unit 2 specific set points to you.

For the Corrective Action Program, the Special Programs, we have submitted and gotten

agreement with NRC on 27 out of 29 of the methodologies for closure. There's two of them that are with the NRC right now called Quality Records and Replacement Parts. We've submitted the documents to you and they're under review for approval.

As I started to talk about a few minutes ago, now we'll talk about what we've done for looking at what we call Historical Document Review. This is where we've gone back. And in order to ensure that we have accounted for all the issues that were brought up during Unit 1 completion, we've gone back and pulled records for all of the various concerns that were expressed, both employee concerns, public concerns. We've looked for the non-conformances in terms of PERs, SCARs, FURs, CAQRs, whatever the various Appendix B reporting terminology was at the time of the Plant. We've looked for all of our NRC commitments.

All told, there was approximately 37,000 documents that were pulled into this population that we've gone through. We've done a detailed review of each one of them to determine is this a subject that applies to Unit 2 just like it applied to Unit 1. So we've taken them and addressed them that way. If it does not apply, we document why it does not apply. If

it does apply, we go through then and assign it to an organization to ensure that that aspect of the Plant, that concern is addressed in the applicable aspect of the Plant. Each item is tracked to closure. And in the end we'll have a database that demonstrates what we've done for each one of them.

So overall through the engineering process of calculating, of designing, ensuring the records are there, ensuring the drawings are there, we're going through a very detailed process to ensure that the right actions are taken to ensure safe and reliable operation.

One of the things that Gordon suggested that I also talk about is a little bit of our ASME process. That this is a slightly unusual situation kind of like the issue of how do you review something that you did before. On the ASME aspects of the Plant, most of this plant was constructed back during the `70s and `80s. And all of the ASME piping, all the ASME components, welds, etcetera were completed by TVA because TVA held the applicable ASME stamps, either the NA, NPT, or N stamps that were needed to construct the plant.

After we stopped construction, we released our NA, NPT, N stamps back to to ASME because at that

point in time we did not have plans at that time to complete the construction.

In order to finish Watts Bar Unit 2, we have gone back to ASMS and to the NRC and got a code case issued and approved that basically says that TVA can go apply for NA and NPT stamps in order for us to complete the documentation of the work that was performed back previously. It doesn't allow us to perform any physical work at all. We can't do any repairs. We can't do any construction. But it simply allow us to complete the documentation for what existed back then.

Anything that's not complete, for example, I talked about doing the walk downs of all the ASME welds and components. If I through my walk downs found that a component was missing or I'm missing documentation of a weld, whatever was incomplete, either hardware or documentation wise, I turn that over to a new certificate holder having overall responsibility. That the entity with that stamp will be Bechtel. Bechtel is going in and applying for their stamp so that they can go and complete the physical work at Watts Bar and complete the paperwork, the various code data reports that are required.

So I will go through and create a ASME N-5

Data Report that will document what was done back previously. I will give that to Bechtel along with all the open items. Bechtel will then go and complete those open items as well as install anything new that's in that time frame from the `85 to current type work that's been done. They will then go create a N-5 for the work that they did. And they will combine those two N-5s together, two partial N-5s together, into what's called a Final N-5.

Then they will provide that back to TVA. TVA is retaining responsibility as the owner. And so as that responsibility, we will be writing what's called the N3 Code Data Report that will list all the big components that are not on a piping N5. And it will also list all the N-5 Data Reports themselves.

In addition to that, Westinghouse is doing some of the work as the original and SSS vendor. They have to provide us the code data reports for the reactor pumps, for the steam generators, for the pressurizer.

And then I'll talk a little bit separately about the reactor vessel in a moment.

So they will be providing us the N-1 and N-2 forms for those components that we will also list on our N-Data Reports.

Westinghouse has conducted some preliminary walk downs. They will be conducting additional walk downs to verify the condition of the components. They'll go in, and if there is any type of degradation or damage such as arc strikes of gouges, they will be dispositioning those, doing any repairs that are required. They will also be doing any construction work on the reactor vessel, like we talked about this morning about the removal of the upper head injection and the removal of the RTD bypass. Those are being done by Westinghouse under their N stamps.

So once Westinghouse does their work, they will provide us the N-1 forms that we'll include on the N-3. Now the reactor vessel itself -- do you have a question?

MEMBER SIEBER: Yes, but finish what you're saying. Then I'll ask it.

MR. CROUCH: Okay. The reactor vessel itself is a bit of an unusual situation, the same situation though as what we encountered with Watts Bar Unit 1. Back at the time the Plant was being constructed, the ASME code did not allow an ASME component to be manufactured or worked on outside the United States. And so these two reactor vessels were

completed in the Rotterdam Works.

And so by the ASME code, they could not be stamped until we received special dispensation in order to essentially -- if you go and look at the paperwork, it looks like an N-1 Code Data Report. Except rather than being signed off by an authorized nuclear inspector such as Hartford, it was reviewed and approved and given inspection report by Lloyds of London. So it received a similar type review.

And then we got an N-1 Report that has all the signatures on it, all the blanks are signed except the words are struck through where it refers to an authorized nuclear insurer. And so that code data that pseudo N-1 Code Data Report is then listed on the N-3 Data Report.

So question?

MEMBER SIEBER: The drawings that are generated either for construction or operation of plants, somebody has to sign those. Will that be a TVA person, a Bechtel person, or another person? Who will that be?

MR. CROUCH: Bechtel.

MEMBER SIEBER: Bechtel?

MR. CROUCH: All of our certified design specifications are certified by Bechtel registered

professional engineers. All of our stress reports have to be certified by Bechtel registered professional engineers. It will eventually roll up to TVA. The TVA will supply the N-3. But the owner's responsibilities do not require an RPB stamp.

MEMBER SIEBER: If you do a design change in the Plant that does not involve an architect engineer, do you have licensed engineers that can sign the drawings, that can sign drawings out?

MR. CROUCH: It's not a requirement here. We're a federal agency. And so we're exempted from the requirement to have that.

MEMBER SIEBER: Okay. What does a federal agency use to serve as the qualification to be able to do that?

MR. CROUCH: We have a training program where we go through and people have to have certain qualifications in order to do these designs or calculations.

MEMBER SIEBER: But there is no certain -- no recognized certification other than your training program?

MR. CROUCH: That's correct. So when we get the N-3 Data Report and all the N files, they will be reviewed by the authorized nuclear inspectors.

They're going through right now reviewing all the paperwork for the TVA N-5s. The N-5 itself for each partial system is probably only about 15 to 20 pages long. But the review file that backs that up is quite voluminous. Once we get done and we stack up those N-5 reports and the associated review file, it'll be a stack of paper about a 115 feet thick. And so they've got lots and lots of -- about 82,000 documents they have to go through in order to review all the components.

Anything else?

Then I'd like to turn it over to Ed.

MR. FREEMAN: Thanks, Bill. I'll be starting from Slide No. 25. Are the microphones on?

CHAIRMAN RAY: If I learned nothing today, I learned this. Try it now.

MR. FREEMAN: Test. Can you hear me? Good.

Again beginning on Slide No. 25. I wanted to give a quick overview of where we are in the schedule. We currently stand at just over 15 percent complete on the project. I think the official number is 16 point something. And we are on track to complete the project within the ascribed 60 months.

Our current focus there is that we have --

construction area is preparing for the work that we have to complete in the upcoming Unit 1, Cycle 9, refueling outage.

I know you toured around the Plant. And Bill has mentioned some of the upgrades that we have to do. You may recall the vital inverter work where we're adding a new Unit 2 inverter. Part of the work in the refueling outage, of course, is to do the final connections of that inverter to its vital power board, reconfiguring the spare as a spare, and making sure that it all works. We can't gain access to the those boards and panels to do those final connections until the refueling outage. And so that's one of the jobs we'll do.

Bill mentioned some upgrades on the essential raw cooling water system, installing the crosstie for the strainer bypass, and the diver barrier. We have windows in the outage to do that. And we're currently doing our pre-outage fabrication so that those components will be ready to slide in and weld in and be usable at the conclusion of the outage.

We also have some interface valves that we have to replace. That's the valves that are basically the dividing point between Unit 1 and Unit 2 on a common system. They were leak sealed in the past.

And so we basically have to take those valves out, put in a new valve that we'll be able to open later on when we're ready to do our testing.

Let's see. Other construction focus areas are -- we are working through that -- the extensive -- I call it extensive. You can appreciate the amount of work that we've got to do to do the equipment refurbishment program. So a lot of the activities going on the field, that is one of our largest number of man hours that for a single program that we'll have invested. And we're keeping a focus on that.

And as Masoud said, continuing to increase the construction back load so that we can actually get the amount of construction activity in the field to be increased as well. We currently have about a half a million man hours of backlog in -- available to work. The amount of planning that's going on right now doesn't sustain. Week to week, we'd like to get maybe 50,000 man hours of work done per week. The last planning number that we saw was more in line of 12,000 to 15,000 man hours. So we've got some productivity improvements to make there to where we can actually -- I'll call it -- unleash the construction work force and start getting some of the bulk construction work done.

So current critical path is through the essential raw cooling water system. We have, as Bill mentioned, we are replacing all eight of those pumps to increase the margin in that system. That's a system that is currently in operation. So that replacement and then later on, of course, the flow balancing that we'll have to do to start put some flow through the Unit 2 branches. We'll have to be very deliberate and careful since it is in operation.

It'll ultimately be controlled by the Unit 1 operations work force. And we'll have to work through them to get as much of it done outside of refueling outages as possible. And then work through the rest of it at the next refueling outage if we're not able to complete it all on-line.

Other near critical path, I think we mentioned -

MEMBER STETKAR: Excuse me.

MR. FREEMAN: What did I skip?

MEMBER STETKAR: PRA.

MR. FREEMAN: Oh, I'm not done yet.

(Laughter)

MEMBER STETKAR: Well, you said you were going to the near critical path.

MR. FREEMAN: Well, actually the RCW is

the critical path. PRA is kind of on its heels in the last schedule. We are doing a schedule review right now as we speak. We expect some other systems to kind of light up that we'll have to go resolve and make the construction activities try to get into more detail there.

PRA in particular, Bill mentioned that we're upgrading it to current requirements. It was a larger endeavor than we had expected. We've got a recovery plan. That has to -- Westinghouse is actually officially doing it for us. The folks in the operating side of the house have to play them. And they're receiving it. And it is the upgrade to Unit 1's as well. And of course we have to play in that review.

But we have laid out a time line that basically all the activity is on a schedule. The group responsible for them are listed on there. And we're monitoring every day in a phone call the progress against that schedule. And we believe that we can keep it.

When we say it's critical path, we want to be sure that there's a comfortable amount of review time once that's complete for everybody. I know that there's public reviews by regulatory bodies after

we're finished with it. That we want to be sure that is comfortable.

So right now it is monitored daily. And it is on a plan that we believe that we can deliver it in plenty of time for the reviews in the licensing schedule.

MEMBER STETKAR: I don't want to take up too much time because I know we're running behind here. But is the scope of the PRA being extended to include events that effect both units?

MR. FREEMAN: Yes, it is.

MEMBER STETKAR: It's going to be an employee integrated --

MR. FREEEMAN: Yes, it is. In fact, it's --

MR. BAJESTANI: Be careful of the time.

MR. CROUCH: No, no, no. We're good on time. In fact, we expect to answer some of the questions that were asked on the tour and have plenty time to do that as well. Other near critical paths, the reactor coolant system. And that's largely because the ERCW system provides a lot of the cooling water to the oil cooler, the motor coolers, and it's a supports system and will have to be done.

We were concerned for awhile that the pump

delivery -- many of you saw that we're putting in new pumps. The motors are being refurbished. The original dates that we got for the delivery put those near critical path. It wasn't exactly on a critical path. But now the -- our vendor is improving those delivery dates. And we don't believe that's going to be a challenge. We'll have plenty of time to put those in and get those ready to go. But we'll still have to wait on the cooling water before we run it.

And similarly the reactor protection, the Eagle 21 system delivery, that's one of the systems that was mentioned previously that we had to retool and make again. That delivery was -- because it touches so many systems, interfaces with so many of the safety related systems, it was critical to get that equipment here, delivered, and hooked up and tested and everything to where it could support the pre-operational testing of all of those other systems.

But again that's another system that the delivery is looking pretty good to support those activities. And we are even into the installation plan details to where we can slide it in and do the insitu testing and then start hooking up the loops of the other systems and get those tested.

And I'll reemphasize that we are on track

to meet our original project schedule.

MEMBER MAYNARD: Your Eagle 21 system, is that from the original equipment manufacturer or --

MR. CROUCH: Yes. We are getting it from Westinghouse, yes.

MEMBER BROWN: Your Eagle 21 is in Unit 1?

MR. CROUCH: Yes.

MEMBER BROWN: And so it's these parts that you're having to deal with to replicate that? That's an old system.

MR. CROUCH: That's correct.

MEMBER BROWN: The architect -- let me ask again. The architecture stays the same? I mean you're tripping the same things? You got the same independence and channels, the instrumentation, the instruments, they all -- their little boxes are the same, etcetera?

MR. CROUCH: Yes.

MEMBER BROWN: The capacity, integrated circuit, whatever it is that's necessary to get the job done?

MR. CROUCH: Yes. With that, I'm going to Slide No. 26, please. Wanted to talk a little bit about the Unit Separation Security. There was, I

think, a question that was sent to us after the March meeting. Go into a little bit into more detail.

Now that you've been on a tour of the Plant, you can see some of the things that we're doing to try to make sure we stay on our side of those fences and don't venture over into the operating spaces. At least when we do have to venture over into there to work on something, that we're fully aware of that we are in operating space and are taking appropriate care.

As you toured, you probably noticed you walked through the turbine building area there on the ground floor that divider fence, that orange fence that was down in between the units. You also probably noticed some of those yellow chains that stood in front of some of the electrical boards. Yellow chains are for everybody, not just us. I mean to make sure people are aware that there's critical loads on those electrical boards. The orange fence of course is the divider that we're obligated to stay on our side or at least get permission to go over onto the other side to do our work.

When there is Unit 1 equipment that's the Auxiliary Building. I don't know if everybody got to tour it. But that's kind of a common building to

begin with. Those -- you'll see those yellow chains around all of the critical equipment with typically stop signs that say -- especially if they're trip sensitive equipment, it says, "Stop, you must have permission of Shift Manager to enter in."

Up in the Control Room you saw that curtain that was installed between the two horseshoe areas. That curtain was installed to -- provides both segregation and they really can't hear us on the other side of that curtain. I mean it does a very good job. They were quite pleased with the way that -- it's really a sound insulating curtain the way that it works or how well that it works. We actually --

CHAIRMAN RAY: When those barriers come down, do you speculate yet on how you're going to be able to designate visually -- that's about the only way you can do it -- the difference between the units in electrical switch gear?

MR. CROUCH: Well, as far as -- you're talking about the unit designations?

CHAIRMAN RAY: Color coding or, yeah. Typically on a dual plant like this you use color coding. But you seemed to have used all the colors already. So, I'm not sure.

MR. CROUCH: I don't think that we've used

all the colors.

CHAIRMAN RAY: I'm being a little facetious maybe.

MR. BAJESTANI: Actually we're going to cover all the questions that came up during the tour.

CHAIRMAN RAY: I thought it was a time I could ask that question because --

MR. BAJESTANI: We are going to address that. Let him finish this and then we're doing to.

MR. CROUCH: Okay. But anyway back to the curtain. When we first installed that, we did take a grinder on our side of it and the folks in the Control Room were listening for it and really couldn't hear it. So it's there for their purposes more than ours to make sure that they're not distracted by the grinding and the welding and all that that's going on on our side of it.

Other things that we did that we did open the North Security Portal to allow all the construction people to pass through there and not put a burden on the one for the Operations side.

The Unit 2 Project workers are all in yellow hard hats. The TVA folks are not -- I mean we are allowed to travel over into Unit 1 when we need to. But if you saw all the yellow hard hats, those do

designate Unit 2 construction personnel so that they're visible. And if we see one of them wandering in areas that we don't think they belong, we can challenge that.

All those contractor personnel are also given badges with the orange background. Our badges are blue. And the Unit 1 folks' colors are blue. And of course you all had the benefit of a visitor's badge. You could see the distinction of that.

And one of the other key things that we did is we did cut construction openings. You walked over into containment, you saw the big chunk of concrete that we cut through so that you could walk without having to walk through the Unit 1's RCA and challenge the RADCON folks. And of course, it saves us from having to walk all the way around the building to get into Containment and do -- a large volume of our work will be in that Containment building.

So that's physical. Any questions on that?

The next slide, please.

As far as organizational separation, as Masoud mentioned, we are a separate group from the Operating group completely. And within our organization we have an Operations Group and a Work

Control process that will recognize a potential interfaces with the Operating unit and the Operating Unit's personnel and will steer those items, those ones that need to will go through the Unit Work Control Group for ultimate approval and be included in their schedule.

The Reviewers that we have in our Operations Group, we've got a pretty big number, I think 12 or so former AUOs, Assistant Unit Operators, either from Watts Bar or from Sequoyah that walk out into the Plant with the folks doing work and basically shepherd them and make sure that, especially when they're in critical areas, that they don't go too close to that critical equipment.

The folks that are reviewing the work documents and the work process are former SROs from Watts Bar or Sequoyah. And they review every work order and design package. They're trying to recognize those interfaces. When they do recognize one, they work with the construction work force to be sure all the requirements of working in the Operating Unit are met. And in certain cases, they'll go with them. Those work items will be included and sent to Unit 1 for review and ultimate approval. Be included in their schedule and risk reviewed in their schedule.

And when necessary, those SORs will accompany any of the construction folks to help them explain what's going on and make it an easier review for the Unit 1 folks so that they don't have to expend as much time.

Additionally, the activities that we have in operating spaces, we review it every day in our POD. But also those SROs that I mentioned, those former SROs that I mentioned, attend the Operations Turn Over Meeting and go over the activities that we have in operating spaces so that Operations staff is made aware every shift, every shift that we're working, of those activities that'll be going on in the Plant.

Any questions about that?

Oh, I'm sorry. I missed one bullet. The Problem Evaluation Reports that we write, the PERs, that's Corrective Action Documents. The Unit 1 folks read all of those. Our folks will do the screening. Our SROs will do the screening for potential operability issues. If we identify something on Unit 1 or call something on Unit 1, they'll do that review and then divert that PER to the SROs for ultimate operability evaluations. But they are reading our PERs on a daily basis.

Questions about that? Okay.

Next slide, please.

A few quick notes about the Unit Separation and Security aspects. The existing security plan for Watts Bar, it currently addresses the physical security controls for both the units. We didn't require any changes to recommence the construction activities for the activities going on. Had no changes required for the future operational activities. There may be some implementing procedures that require revision prior to fuel load. But those procedures will be revised on time.

The Watts Bar Security Plan, it will be revised to implement the changes resulting from the new security rule on or before March 13th of next year. So whatever requirements -- that's not required as a function of our project, but of course, the project will maintain an interest in that.

For the Cyber Security Rule, the protection of the visual computer communication systems and networks, these requirements are to provide high assurance that the digital computer and communication systems are adequately protected against the cyber attacks. That's being handled for TVA corporate. Mr. Arent over here, our Licensing Manager, is our member of the team on that. And TVA

expects to submit its security plan on or before November the 23rd of this year.

And finally, the Aircraft Rule, Watts Bar Unit 2 is a required to develop and implement procedures that employ mitigative strategies similar for those for licensed plants to basically maintain or restore core cooling, containment, or spent fuel for cooling under the circumstances associated with loss of large areas of the Plant due to explosions or fire. Current license requirements and that's what we're committed to and that's what we plan to do.

That's all I have, if there are any questions.

Masoud.

MR. BAJESTANI: Okay, during the tour we had some questions. I'd like to go over some of these questions just provide the answer.

CHAIRMAN RAY: Before you do, Masoud, could I direct a question to your QA Manager.

MR. BAJESTANI: Sure. Go ahead.

CHAIRMAN RAY: He'll need a microphone.

MR. BAJESTANI: Raul, come on up here. Come here. And don't speak Spanish.

(Laughter)

MR. BARON: This is intimidating presence.

(Laughter)

CHAIRMAN RAY: Have you had occasion thus far in this work to stop work?

MR. BARON: We haven't had -- I haven't had to issue stop work. There have been several administrative holds. My managers, after issues have been identified, have taken the appropriate action which then at that point I didn't have to issue a stop work as a result of that.

We had some issues at the beginning where the program, inspectors program, we're implementing. They issue -- we issue a Corrective Action Document. They held the program. And they fixed all those issues before they continue.

CHAIRMAN RAY: You are prepared to issue a stop work?

MR. BARON: Oh, yes, sir. If I don't see that the corrective actions that are taken as sufficient and they don't take appropriate actions, I will stop work. I understand how to do that.

CHAIRMAN RAY: That's all I have.

MEMBER BROWN: Would you give an example of what you've had to do?

MR. BARON: Well, when we initiate --

MEMBER BROWN: What was the category other

than the stop work? Was it administration?

MR. BARON: Yeah, usually you know the Management themselves when we identify an issue that is sufficiently significant, they will take appropriate action. They will hold the work and take the actions appropriate. We will review those actions to make sure we are satisfied.

MR. BAJESTANI: He's looking for a specific example. Give us a specific example.

MR. BARON: For example, we had a condition where during the initial baseline of the walk down for the supports on the 7914 we found some issues above and beyond what Bechtel --

MEMBER BROWN: What kind of an issue?

MR. BARON: Well, they were missing some of the dimensions. The drawings, you know, some of the required dimensions they were supposed to take during the baseline walk down weren't done.

MEMBER BROWN: The dimensions were associated, you said a walk down, during one of the walk downs of 7914?

MR. BARON: Right. There was a full walk down to verify the as-per conditions of the supports in place.

MEMBER BROWN: Was it largely a

configuration control type?

MR. BARON: A configuration control type. When I brought those issues up, Management took appropriate corrective action in cooling and stopping all the activities, going to all the trainings, creating a -- going back and redoing everything that they have done to that point. That by itself allowed me to evaluate the actions and monitor how they implemented corrective actions.

MR. BAJESTANI: Were there any material discrepancies that were --

MR. BARON: Well, this is the baseline to try to determine.

MEMBER BROWN: Oh, those were dimensional you talked about. So was any part of configuration control materials that are used being reviewed? So I'm just curious if there was any examples of those that came up? Whether something is two inches or one inch or one foot, two foot, whatever, that's one thing. But you got stainless steel where you should have titanium, for instance.

MR. BARON: No, none of those. None of those type of material issues. There were really dimensional issues. For example they missed the size of the weld which are critical when the size reviewing

the configuration of the support.

We had a lot of those issues previously in all the plants when we started. So those what we were trying to ensure that the Bechtel, as far as control, that we do not QC by the field engineering walk down and the qualified individuals were picking up those dimensions and those configurations measurements so the design can evaluate correctly so we don't have to deal with it at the final point for the as-field configuration.

MEMBER BROWN: You said a weld dimension?

MR. BARON: Right.

MEMBER BROWN: The final weld dimension that's wrong?

MR. BARON: For example, they --

MEMBER BROWN: How do you correct that? I mean if it's supposed to be -- the weld band was supposed to be so wide or whatever, wider than it's supposed to be or narrower that it's supposed to me. All you can do is grind it out and do it again. Or you have to do an engineering evaluation to decide it's okay?

MR. BAJESTANI: This was in baseline verification of supports. So you measure. The walk down was to go measure the weld. They measure the

weld. And after that, QA they do some sampling of those data that was taken to ensure the accuracy. When they did the evaluation, they found that there was some welds that the dimension -- if it was supposed to be a three-quarter of inch, it was not exactly three-quarter of inch. So this data all is going to be taken Central Engineering for their evaluation. So --

MEMBER BROWN: Has it been evaluated yet, or you're just in the process?

MR. BAJESTANI: No, he was in process of taking the data and sending to engineering for evaluation.

MEMBER BROWN: So you haven't finished that yet?

MR. BAJESTANI: No. It was part of the process.

MR. BARON: You got to remember what I was saying is, we initiated our baseline program. We wanted to make sure the program is going to work properly. We found discrepancies and we took the appropriate action so that the program will give us the resource that we need that engineering will have to evaluate to determine the as-field configurations of the Plant, which is also going to be determining

what kind of a modifications we have to do or repairs on those type of supports that we have in the field. So this is just the baseline to determine that.

MR. BAJESTANI: The questions that came through during the tour. One was on the refueling water in the storage tank. The tornado question that came up whether or not it's qualified. How do we design that?

Bill, you want to answer that?

MR. CROUCH: We went and did a little more research based even beyond what I told you out in the field. The tank is made such that it actually extends below grade and has a concrete wall around it. It goes below grade. So this concrete wall protects the sides of the tank from the grade down to ensure that there's roughly 20,000 gallons of water still available in this tank structure.

Also down in the tank there are vortex suppressors. So that if you had any kind of debris that comes in, first of all the tank itself would hold the water. And the vortex suppressors would keep something from just being able to push up flat against a suction point on a pipe. So you'd still be able to get suction from the tank.

CHAIRMAN RAY: So the water volume that's

required sounds to me like it is protected from tornado missiles?

MR. CROUCH: That's correct.

CHAIRMAN RAY: What's sticking up that you see is excess volume.

MR. CROUCH: That's correct.

MR. BAJESTANI: Okay, any other questions on that?

The next question that -- again I wrote down some of these questions as we were going through the tour. It was on the electrical board room. As we were going through from one room to another room, there was a question whether or not these were all one fire zone, or is it separate fire zone?

Steve, you want to answer that?

MR. HILMES: The way it's designed and it's our analysis is that each of the channels is in its own fire zone. Channel 1, you will have a Unit 1 and a Unit 2. Unit 1 and Unit 2 for the -- are for Channel 1 are in the same fire zone. The Channel 2 there's a "isolation zone" for Unit 2.

MEMBER BROWN: So it's an open isolation zone.

MEMBER SIEBER: It's allowed under -- provided there's some pressure detection.

MR. HILMES: Some pressure detection and no intervening combustibles.

MR. BAJESTANI: Any other questions on that?

The next one that we had was on the flox probe and thermocouples, the locations and what's different. This is an improvement that we're making on Unit 2. How is this designed -- and how many locations and so on and so forth?

Steve.

MR. HILMES: Steve Hilmes. What the system does is it uses the existing thermotubes -- essentially there will be 58 probes. Each of those probes will have five -- detectors as part of the core power parameters. There will be one -- normal couple at the very top that from core exit thermocouple temperature -- detectors they are designed with --

MEMBER BROWN: How long years for the material -- six four zero?

MR. HILMES: Four zero, yes. The expected design life is around 20 years for the overall probe. That may change as we go. It's just right now that's what -- what occurs after it comes out of the probe the core exit thermocouples actually go to our post X monitoring system, which is called the Continuity -- a

system called Common Q. And too they are divided into two trains out of -- they exit the seal tank --

MEMBER BROWN: So that's a digital system.

MR. HILMES: That is a digital system.

MEMBER BROWN: Microsoft software based?

MR. HILMES: Yes.

MEMBER BROWN: Is that different from Unit 1?

MR. HILMES: Unit 1 uses also a digital system. It's called ICCm 86. That pipe form wasn't available. So we're using THE Common Q system, which has the -- as far as the wind size itself which is the core power parameters, it's not a safe related system. Those probes go into two panels that are mobile mounted and they'll be sent out, digitally out, to our -- that's pretty much the design of the system. The advantages of it are essentially you've got -- it's continuously taking readings so -- better information. Additionally, you're eliminating many of the penetrations you have on the upper -- you're getting --

MEMBER BROWN: And so there's one thermocouple per probe?

MR. HILMES: Per --

MEMBER BROWN: Per -- and it's at the top?

MR. HILMES: Yes.

MEMBER SIEBER: The disadvantage is you lose the resolution of the actual profile, watch profile, of the form that you were getting -- so I presume -- I'll have to check this, but I presume that somebody has justified the lower resolution and the application to --

MR. HILMES: Actually Westinghouse predicts actually because of the fact that -- is monitoring and the different elevations -- that actually connects you with more accuracy --

MEMBER SIEBER: Are they all at the same elevation?

MR. HILMES: I'm not sure of that.

MEMBER SIEBER: The VF5 preferred or are they equally spaced or different probes at different elevations?

MR. HILMES: I can't answer that. I'll have to go back --

MEMBER SIEBER: Well, we can check that. But I need to ask more questions about it.

MR. BAJESTANI: We may be able to --

UNIDENTIFIED MALE: All at the same level, one probe --

MEMBER SIEBER: Well, there are things you

can't detect unless you -- on the other hand, you can't detect -- if you use your up support detectors to do that anyway.

MR. HILMES: That's correct.

MEMBER SIEBER: Well, I'll just have to read up on it.

MR. BAJESTANI: We got the information. Let him go through and they can tell you actually exactly what the locations are. We have that information.

MEMBER SIEBER: Great.

MR. BAJESTANI: So any other questions on the wind size?

Okay, the next question that I wrote down was under the hydrogen ignitor, whether or not it's the diesel back power? It is?

Any questions on that?

Next question that we had was under color coding of the units, Unit 1 and Unit 2. Okay, we have had some discussion with Unit 1 as far as what do they want us to do really code, color, paint, different systems, different colors.

Unit 1 is actually coming up. They're going to give us their guideline what they want us to color. But it is going to be color coded which means

Unit 1 is going to be different than Unit 2.

CHAIRMAN RAY: Okay, maybe we want a barber pole, usually stripe or something.

MEMBER SIEBER: Usually when they do that, they paint the walls different than the piping. It's all color coded depending on what's the pipe. For example, fire protection is red.

MR. BAJESTANI: Right. We're talking about -- the color. You know, there are certain systems that you have to have certain color, like --

MEMBER SIEBER: Right.

MR. BAJESTANI: -- oil system is yellow. Fire protection is red.

MEMBER SIEBER: Perhaps the wall could be -- the building could be any color you pick.

MR. BAJESTANI: That's really what we looking at.

MEMBER SIEBER: You got a choice of two.

MR. BAJESTANI: That's right, that's right. So we all going to get that guideline Unit 1 what they want us to color or paint and that's what we're going to do.

MEMBER MAYNARD: You keep saying that get that guide from Unit 1. I'm assuming you're treating this as though when this is all over basically Unit 1

ends up owning the entire both units.

MR. BAJESTANI: Yes.

MEMBER MAYNARD: Okay. That's why --

MR. BAJESTANI: That's the reason we have to keep --

MEMBER MAYNARD: What you're really saying that this site -- whoever is going to end up owning the site, just the site.

MR. CROUCH: Well, ultimately they have to license all the Operators and everything, whatever human performance things that they want to do, we're going to --

MEMBER MAYNARD: Got it. I understand that and I can understand what you're saying basically you don't want to become the owner of the site there, right? The way you kept presenting is kind of like, well, we're told there's going to be a Unit 1, Unit 2. Neither could decide on kind of what they want. And that's --

MR. BAJESTANI: I don't know if you note this as we were going through Unit 1 and Unit 2. There are tags actually right now that are different color. Unit 1 actually is yellow; Unit 2 is blue. And then Unit Common is actually -- common equipment is white. So if you look at the unit ID, you can

actually say, yes, this is Unit 1, this is Unit 2, and this is common equipment. But as far as component --, we're going to color it the way that it's different than Unit 1 and what we waited till essentially to really get that from Unit 1 what did they want, what color.

MEMBER STETKAR: Masoud, I didn't want to -- you have more answers to the questions from this morning. Let me just follow up on this.

MR. BAJESTANI: Sure, sure. Go ahead.

MEMBER STETKAR: Cause we're okay on time. We talked an awful lot in March and in this meeting about what's being done right now and in the next year or two in terms of physical equipment at the Plant and reviewing design calculations and licensing bases and so forth. You haven't talked very much about what's being done on the operational side of the house in terms of what are the plans for training -- not so much training, but retraining Operations personnel and looking at maintenance practices and so forth.

Because as Otto mentioned, we've heard there's a Watts Bar Unit 1 and there's a Watts Bar Unit 2. But in some time in the period of 2011 to early 2012, there will be a single site with two units that is operated by a set of trained Operators. In

many cases those Operators have operated Unit 1 now for 13, 14 years and they know how Unit 1 operates. And in particular with a lot of shared systems, they know how those shared systems work. But their shared systems that are only Unit 1 systems now with a lot of extra equipment in some cases.

So what I'm curious about is it is necessary to -- I don't want to say the words untrain the Operators. But change Operators' state of knowledge about some of these systems and how they shall be operated, like alarm responses, abnormal procedures, not necessarily emergency procedures.

What kind of track are you on in terms of that type of training and preparation? Also things like preventive maintenance programs, scheduled maintenance, you know, do you have a lot more flexibility right now than perhaps you might have after Unit 2 starts operating?

MR. BAJESTANI: Let me start by saying that right now Unit 1 staffing, they have about a little bit over 500 people. When we start this project, when we actually start Unit 2, we going to have a little bit over 800 people. So we are hiring 300 permanent -- over 300 permanent employees for two unit operations.

We have already actually we started hiring back in October of 2007. The first class that we actually had was AUO classes for two unit operations so we can get ahead of the game. Because that was one of the lessons learned also from Browns Ferry, we started with the late. So we have actually had a number of Operator class that they're going to right now.

With respect to maintenance procedures, operating procedures, alarm response procedures, actually we, Unit 2 Project, we are actually writing those procedures right now. We're going through Operation is writing operating instructions. We're going to be writing all the preventive maintenance.

But the people that we are hiring on Unit 1, the 300, over 300 people, that we're hiring, these are the same people that they're going to come in on Unit 2 side and drum component testing, system testing, integrated testing to get familiar as we go through all this testing, alarm response, so on and so forth that we're going to do. So we're going to get that type of experience from Unit 1 or from the total number, these 800 people, that they will be working some of them on Unit 2 to get familiar.

So when we get to a point that we're going

to load fuel, we actually transition from construction procedure. Before we load fuel, everything is going to be going into the operating side. We're going to be using operating procedures.

So this process is already started. The only thing that we planning to do right now we looking at, okay, we are changing valves, motors, pumps. We're going to be actually putting a PN in place for the next two or three years that essentially a lay-up. We're going to have to go take pumps, motors, so on and so forth. We are looking at actually writing the procedures. We are looking at bringing Unit 1 staff -- really it's going to be Unit 1, 2. The guys that we have hired bring them to actually do some of this work so they can start learning. And if there is anything different, they can actually start looking at the stuff now.

MEMBER STETKAR: That's good. I mean that sounds really good that you've learned to start that process now rather than waiting for another or something like that.

MR. BAJESTANI: Exactly.

MEMBER STETKAR: I think a little bit of my focus was the context in which that new training is going. In other words, if I have a shared system with

five pumps that is supplying flow on two units what I do when a pump trips might be a little bit different than if I have two pumps normally running with three extra pumps supplying only one unit so that then my responses and the way I think about operating that system or perhaps precautions about the outline of it might be a little bit different than when I have that fully unit load.

So I'm just curious whether you're training your people now within the context of your understanding of the way the combined dual unit site will work, especially for these shared systems. I'm not so concerned about the stand alone systems on either unit.

MR. BAJESTANI: That very good question. Again part of really this startup process is especially on some of this shared safety related common systems, like ERCW pumps. We're replacing all the eight pumps. We're going to actually have to go and do a flow balancing. That's going to be a very tough job really operating and really another unit to get the flow and so on and so forth. Actually that's part of the procedure and process that Pete is putting together, our Pre-op Startup Manager.

Some of this work we may actually have to

do during core off-flow type period. I don't know exactly how we're going to do this. But we are planning all this. We're going to bring the -- obviously we're going to write the process and procedures. We're going to go through different things. If this happen, what is going to happen? What is going to do to their flow for certain equipment? These are generators. You have to maintain certain cooling water. Okay, as I'm going through this flow balance, tripping the pump, what is it going to do to the tech spec equipment that's required for operating?

So all that is being -- again we're looking at the stuff and we're trying to figure out, okay, how we're going to do certain things and when we need to do it. And the Operator involvement up front. Based on again the fact that we are doing this hiring up front and we have done the hiring up front, we're going to get some of these Operators. They are going to be actually integrated into our Pre-op Startup Program as we go through the program.

MR. FREEMAN: And I would add to what Masoud said that neither one group does have a what I call an Operational Readiness Group that includes Operator -- the operations training. They are

beginning to look at the changes. This week specifically I attended the meeting that they were looking at the unit difference.

You know, we want to be an exact match, but inevitably some of the control systems we know are going to be slightly different. So they're starting to look at those, both individually for Operator training needs and they'll look at them in the aggregate as well just to be sure that we don't build something that's too cumbersome for that to a difference there.

But anyway they have a group that's focused on that. They're training the new Operators that Masoud is speaking of. And since I'm on the Committee, I'll be glad to say, look, you do need to change some things. If you're training new Operators, we don't want to lose focus on the fact that, yeah, those Operators that are out there today have been running one unit for 13, 15 years by the time we get this unit on.

And they need to consider changes to the common system. They need to consider deprogramming, if you will. I think that's what you're getting at, deprogramming some of the Operators from single unit mentality. I'll address that with them. But Unit 1

ultimately has that --

MR. BAJESTANI: And part of our Startup Program really is each organization is going to go through and do a detailed self-assessment as far as readiness for operating two units. Those are some of the questions that is going to be part of. Okay, what are we going to do? And those self-assessment we have actually started that now. What do we need to do?

VICE CHAIR ABDEL-KHALIK: Would you expect any changes in the -- any differences in the set points, for example, for the reactor protection system?

MR. BAJESTANI: We need to get Steve back here. What we do expect some changes. The reason for that we are licensing this Plant to the original megawatt thermal. Unit 1 right now they do have the delineate flow meter which they got 1.4 percent extra power, megawatt thermal, which is going to have some impact on some of the set points.

VICE CHAIR ABDEL-KHALIK: Would the differences in the set points with the reactor protection system cause any confusion if you have a dually licensed Operator?

MR. BAJESTANI: Again part of this unit difference is we are evaluating every one of this

changes, if there are some set point changes, and see what the impact is on the Operator and dual unit operations. But personally I don't know of any -- and again I'll have to ask Steve when he gets back.

Or maybe, Frank, you can address that? Any set point change?

MR. COOMBS: This is Frank Coombs. We don't expect either set point changes that would meet the two units. And as Masoud mentioned, we will start up with the original licensed power. Soon after we license the unit, we will be requesting from the NRC to use the -- flow meter, which will upgrade our power to the same power level as Unit 1. At that point in time again we will have to revise set points for to get the two to match. There will be a short period of time there where we would have a difference. But then it will be later when maybe some factor in the first or second cycles.

VICE CHAIR ABDEL-KHALIK: So you wouldn't expect that any of the physical differences that you're, you know, forced to use a different kind of piece of hardware because of obsolescence to cause any differences in the set points for either the reactor protection or set points for various systems?

MR. BAJESTANI: No, we don't expect that.

But again I want to have Steve just confirm.

Do you understand the question, Steve?

MR. HILMES: Differences in set points based?

MR. BAJESTANI: Differences in set points based on the megawatt thermal. Is that going to create any problem as to reactor protection?

MR. HILMES: Not for the change in reactor powerage, it should not.

MR. CROUCH: Any of the instrument changes cause a change in response time or anything like that that might affect set points or --

MR. HILMES: No. The only thing that I'm expecting right now as far as deltas and set points is steam generator level and that has nothing to do with any instrument change, implementation changes. All it has to do with the difference in steam generating --

VICE CHAIR ABDEL-KHALIK: My concern is if there are significant differences, then it may cause confusion amongst the Operators.

MR. BAJESTANI: Sure, exactly.

MR. HILMES: We went through this before we went in and started selecting different transcripts and stuff. We went through that with Westinghouse and --

MR. BAJESTANI: Okay, I think those are all the questions that I had during the tour. So if there is no other questions, I was just going to basically summarize the presentation and turn it back to you.

CHAIRMAN RAY: I think we have time for one more. Ten minutes. Or is your summary going to take longer than five minutes?

MR. BAJESTANI: My summary is going to take five minutes or less.

MEMBER BROWN: Just a quick -- can I?

CHAIRMAN RAY: Yes.

MEMBER BROWN: You're talking about refurbishing -- inspecting and refurbishing a large number of components: flox valves, etcetera, whatever. And I guess my question is if there's a large number of items identified as a set or there may some more. And I got the implication that those are all going to be done here by site personnel. Or are you shipping some of the more complex components back to the original vendor or as close to the original vendor as you can get that have the people used to taking those things apart and putting them back together as opposed to somebody who has never taken one apart? Even replacing packing in a valve if you haven't taken that

valve apart before, you can mess it up when you put it back together again. So that was my --

MR. BAJESTANI: On the major equipment, major safety related pumps, we are removing those pumps. Actually we send them to the vendor for refurbishment. Same thing with the big motors. Same thing with -- again, major components. On valve packing, we have trained people actually here. We have brought people over here to do valve packing changing.

MEMBER BROWN: You have brought people here?

MR. BAJESTANI: We have brought people here.

MEMBER BROWN: From?

MR. BAJESTANI: It's actually is part of the subcontractor to Bechtel. There's another company that's actually doing that for us right now. Specialty vendor on valve packing. We just brought -- I don't remember exactly the name of the company.

MEMBER BROWN: To answer that, let me paraphrase so I don't get eaten alive here. Safety related components, pumps, major valves, anything that's safety related, those you're trying to get back? You were sending back or using the people that

know how to deal with them as opposed to trying to do them here on site?

MR. BAJESTANI: That's correct.

MEMBER BROWN: Or bringing people on site, I guess, if you brought the vendor here. Okay. That answers my question. Thank you.

MR. BAJESTANI: Okay, in summary, again, we have spent a lot of time actually establishing what we have as far as the material and condition, look at the equipment, what we have have, what's missing, the condition of the equipment. We have evaluated all the lessons learned from Watts Bar Unit 1, Brown's Ferry Unit 1, and the industry. All the lessons learned from early `80s. Some of the plants that have had problems. We have looked at all those. We have incorporated those lessons learned into our process and procedures to make sure we don't have the same problem over and over.

We have developed and implemented programs to install the new equipment where we need it. You heard some of the new equipment that we are going to be putting in. The refurbishment program is extensive refurbishment program. We are also looking at any place that we can actually improve the material or equipment performance. We are looking at that too.

Again, Bill went over some of the examples of improvement.

We are taking the opportunity. We know that because there is essentially no dose, certain things we can do now before we start up, we're going after those. We are actually going to make some of those changes before we start up. Again these are some of the improvements. Opportunity to take to when we come back with this unit have it better, more reliable with better operating capacity factor.

So again in summary we have looked at all this. We have pretty good planning place. And we really believe that when we finish with this project, we're going to have a unit that's going to be running well with some of the changes, some of the lessons learned that we have learned from industry or TVA.

The other thing that we've been doing actually again everything that we -- Bill mentioned on the regulative framework and all this different program that as we're going through we've been communicating all our programs how we're going to do it with the Region. Region has significance presence here and also with NRR. So all this has been coordinated and we've had a very good communication between Region, us Region and us and NRR.

That's really all I had unless you had any other questions. If not, I'm going to turn it back to you.

CHAIRMAN RAY: Okay, thank you. What we're going to do from here is I'll check with the other members here about any further questions for TVA. Then we'll have a period of public comment. I want to be clear that this is an ACRS meeting. Public comments will be made to the ACRS. And if there's any response, we'll make it.

With that said, I want to congratulate you on a very excellent response to our request to visit. Your team has done in my judgment a really outstanding job of responding to our questions. And we sincerely appreciate it.

MR. BAJESTANI: Appreciate it.

CHAIRMAN RAY: As always, there's the caveat that we can only speak for ourselves as individuals at this point. So with that, let me ask is there anything else anybody would like to say to TVA? Question, comment? Oh, okay. But again, thank you very much.

MR. BAJESTANI: Thank you. Appreciate that.

CHAIRMAN RAY: Now, Maitri, do we have a

list of any persons who want to make any public comment?

MS. BANERJEE: Well, right now we have three members of the public attending the meeting. I don't know maybe we should check to see if anybody is on-line or not. Will somebody do that? Is there anybody on-line who wants to make any questions or comments to the ACRS members present here. Please identify yourself and speak.

Is there anybody back there?

CHAIRMAN RAY: Any member of the public present?

All right, we're going to use this microphone here. We have a microphone. May I ask you to please stand and identify yourself?

MR. CALLEN: I can identify myself in a couple of ways. I'm Said's friend. Anyway, I live -- I have a cabin about five miles north of here on Watts Bar Lake.

CHAIRMAN RAY: Name?

MR. CALLEN: My name is James, Jim Callen, C-a-l-l-e-n. I'm also Professor Emeritus Engineering Physics of the University of Wisconsin. Anyway I actually have three questions from most of the presentations.

The first is if I understood correctly, the indication was that on Watts Bar 2, you would use analog controls on the basic controls of the reactor. I would just note that it seems to me those must be getting difficult to acquire. And if you think of a 40-year license, let alone a possible extension to 60 years. I kind of wonder if that's the right thing. And I would be curious, if I got that right.

And secondly if there's a plan to move from a basically analog control system to a digital control system that might be more vendor available over some extended period of time?

CHAIRMAN RAY: Well, we'll take your comments, sir. You framed your first comment in the form of a question. But thank you for that. Go ahead.

MR. CALLEN: Well, the second one is the Chairman here has asked some questions about ways of delineation of responsibilities between Bechtel and TVA. And I got confused in the discussion having to do with what I understand are nuclear certifications, etcetera, where it sounded like Bechtel was the only sign off there. And the question, and the TVA almost just pass through. And so it's just a question, an observation that didn't -- it sounded ambiguous to me

as if TVA did not have sufficient nuclear capability and professional engineers who could sign off. But anyway...

And the third comment, which I'm a little surprised after living five miles from here, was the comments on the preceding to the next -- if you could go back one -- but anyway it says Aircraft Rule. Watts Bar 2 is exempted from the Aircraft Rule. I'm not aware of what that rule is. I presume it's a 911 thing. And secondly I'm curious what exactly that means.

CHAIRMAN RAY: Okay, thank you. If you could -- you've given us your name. If you could give us your address, a way we could get back to you.

MR. CALLEN: Sure.

CHAIRMAN RAY: We'll make sure that the Designated Federal Official right here has taken it. And we'll deliberate and decide if we should respond or someone else should. Thank you.

Anybody else?

Okay, seeing none, then we pass into the last phase on the -- well, next to the last phase, adjournment, last phase actually. Next to the last phase is Subcommittee deliberations. And we can deliberate on the comments just heard as well as the

input that we've received all day from TVA. And the purpose of this is to identify things that we want to take away from here for our own further action perhaps or dialog among the members for a few minutes based on what we've seen today.

And so as we usually do, I'll start with Otto and see if he has anything he would like to say.

MEMBER MAYNARD: Well, first of all I do appreciate the time and the tour. I know how much trouble it is to put those on. I think we heard a lot of good things today of what's been said.

I think the proof is in as they implement them how are those being inspected and verified and how are issues going to be handled. We'll be talking with the Region later this week a little bit about their plan for that.

But I think it's a little early in the process to be drawing any final conclusions on the applicacy (sic) of all this. But what I've heard so far has been encouraging that there is a process in place to deal with this.

So I don't have anything else that I take away from this point.

CHAIRMAN RAY: John?

MEMBER STETKAR: I'd also love to add to

Otto's thanks for being very responsive. And I think we -- I certainly have a much better appreciation of what's happening here. I think also as Otto mentioned, it's -- we're well into this process. He mentioned a couple of years, but things seem to be moving quite rapidly. It's not -- it sounds like TVA has a very thorough, systematic process laid out to be sure that everything is accomplished in a very carefully thought out process.

Quite honestly, I'm not sure whether you're going to make your target dates for loading fuel. But that remains to be seen. I would encourage TVA to keep on a very systematic process, not to worry too awfully much about that schedule. I know that's easy for me to say.

MR. BAJESTANI: Easy for you to say.

MEMBER STETKAR: It's easy for me to say because I'm not a repair.

CHAIRMAN RAY: Okay. Jack.

MEMBER SIEBER: I also appreciate the efforts of TVA and the Resident Inspector and the Region 2 Inspectors for their effort in giving us a good presentation. I was interested in coming here because I was responsible for the restart of construction of the second unit also, and I know what

an effort that was.

And I have seen other units where construction was stopped and the conditions after a period of time were not good. I was pleased to see in the case of Watts Bar 2 that there has been preservation going on, that the plan of attack to resume construction seems to me pretty reasonable. And I would not want to see you go on-line without my further attention. However, I expect that you're starting in the right direction.

All of my questions have been answered to one extent or the other. Except I need to follow up on the -- monitoring and how to -- myself.

The commentor's question, I think, are interesting. I would -- I intended to ask his third question but did not. In the time that I would like to hear the answer to and that is the exemption from the Aircraft Rule. What is the basis for the exemption? Does the exemption last forever? Or does it last until you start up? And so I'm sure either the staff or the licensing can give us those.

CHAIRMAN RAY: We will meet on this further. I'm a little reluctant to pursue licensing issues in this one. Just because it's not something that we made -- prepared to respond to without some

further research.

Said?

VICE CHAIR ABDEL-KHALIK: I agree with the comments made by Otto and John. I found the tour to be very valuable. I had questions about the material conditions of Plant, given that long time period that the Plant has been sitting there. I found it to be very reassuring to see the current material condition. Thank you.

CHAIRMAN RAY: Charlie?

MEMBER BROWN: Yeah, I wanted to echo Said's comment relative to the valuableness of seeing the material conditions. That was obviously a big question for a lot of us. I don't have any other additional items other than to anecdotally express not a negative response. I wouldn't want our public commentor to think analog is really not gone. I mean it's -- (Laughter) In spite of everybody's infatuation with digital instrumentation, analog is alive and well and you can build a lot of stuff. A few piece parts might be a little difference.

And as a matter of fact, just to show you how archaic it really is, they're still waging arguments about whether sound produced by vacuum tubes is better than or less than that which is digitally

mastered by those who are just think they have sample rates and high speed processors. And believe me, if you've ever listened to one --

CHAIRMAN RAY: Don't do a lot better.

MEMBER BROWN: -- have sensitive ears, vacuum tubes are better.

CHAIRMAN RAY: Well, but so you're using that by way of analogy

MEMBER BROWN: Exactly.

CHAIRMAN RAY: You're not saying --

(Laughter)

You're not suggesting vacuum tubes.

MEMBER BROWN: No, no. Anecdotally. I agree with you. I'm not -- I'm done. I exited vacuum tube in 19 -- well, actually in 1985 in the nuclear naval program. And I was thankful we eliminated those. That's another story. No, I'm just kidding.

But anyway that's -- so again I do appreciate the candor and I appreciate the responses to the questions that I asked. I appreciate the rapid responses. I've had some drag outs. So thank you very much.

CHAIRMAN RAY: Maitri, is there anything else we need to do?

MS. BANERJEE: I guess we finish

Subcommittee deliberations. So you can now adjourn the meeting.

CHAIRMAN RAY: Done.

(Laughter)

(Whereupon, this meeting was concluded at 4:05 p.m.)

TENNESSEE VALLEY AUTHORITY
WATTS BAR NUCLEAR PLANT UNIT 2

Advisory Committee on Reactor Safeguards	**July 28, 2009**	**WBN Tour and Meeting**

Agenda

- Introductions
- Organization
- WBN Unit 2 Material Condition
- WBN Unit 2 Design, Licensing and Construction Activities
- Security and Separation of Activities Between Units
- Conclusion

WBN Unit 2 TVA Organization

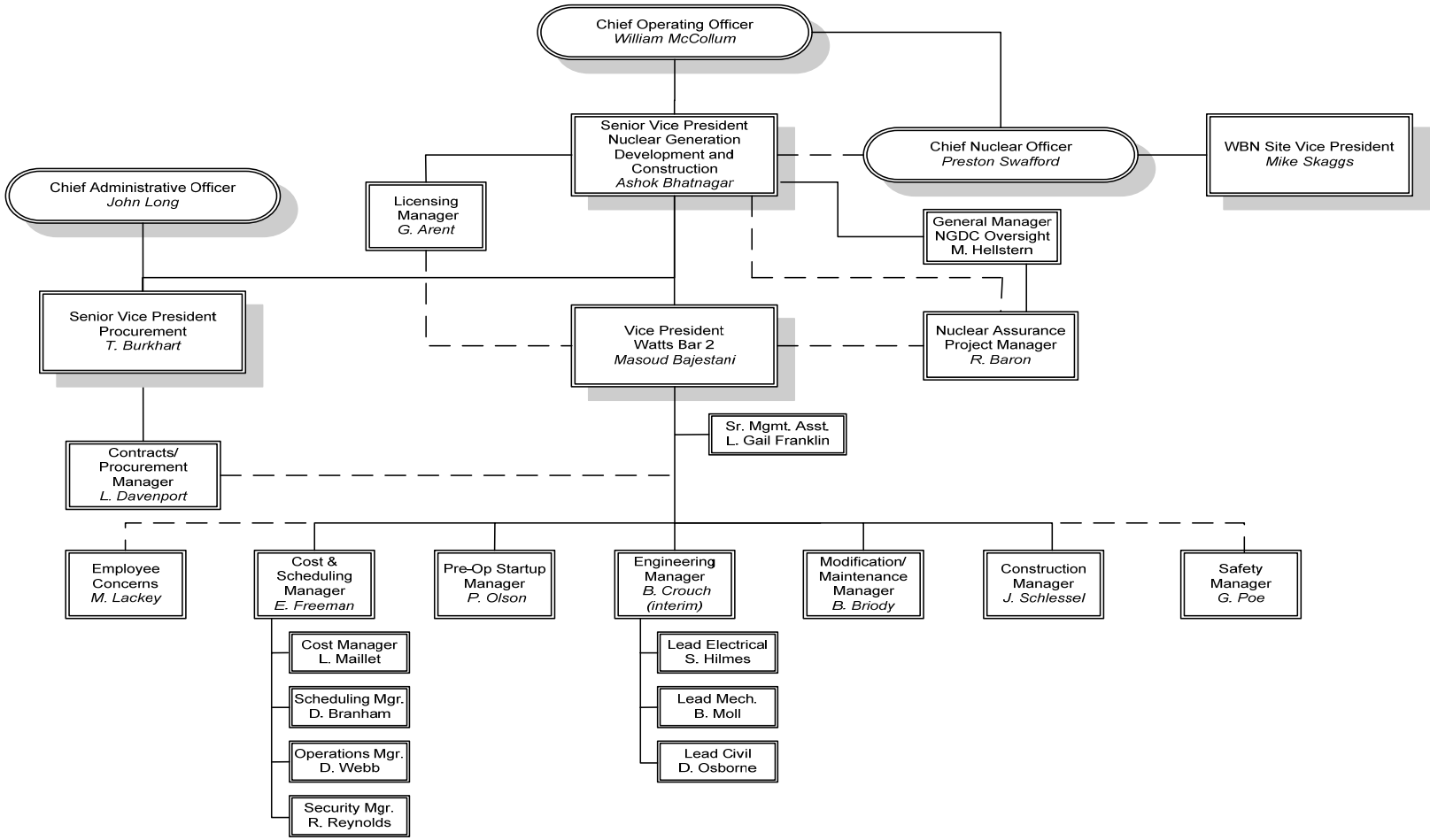

M. Bajestani

WBN Unit 2 Construction Organization

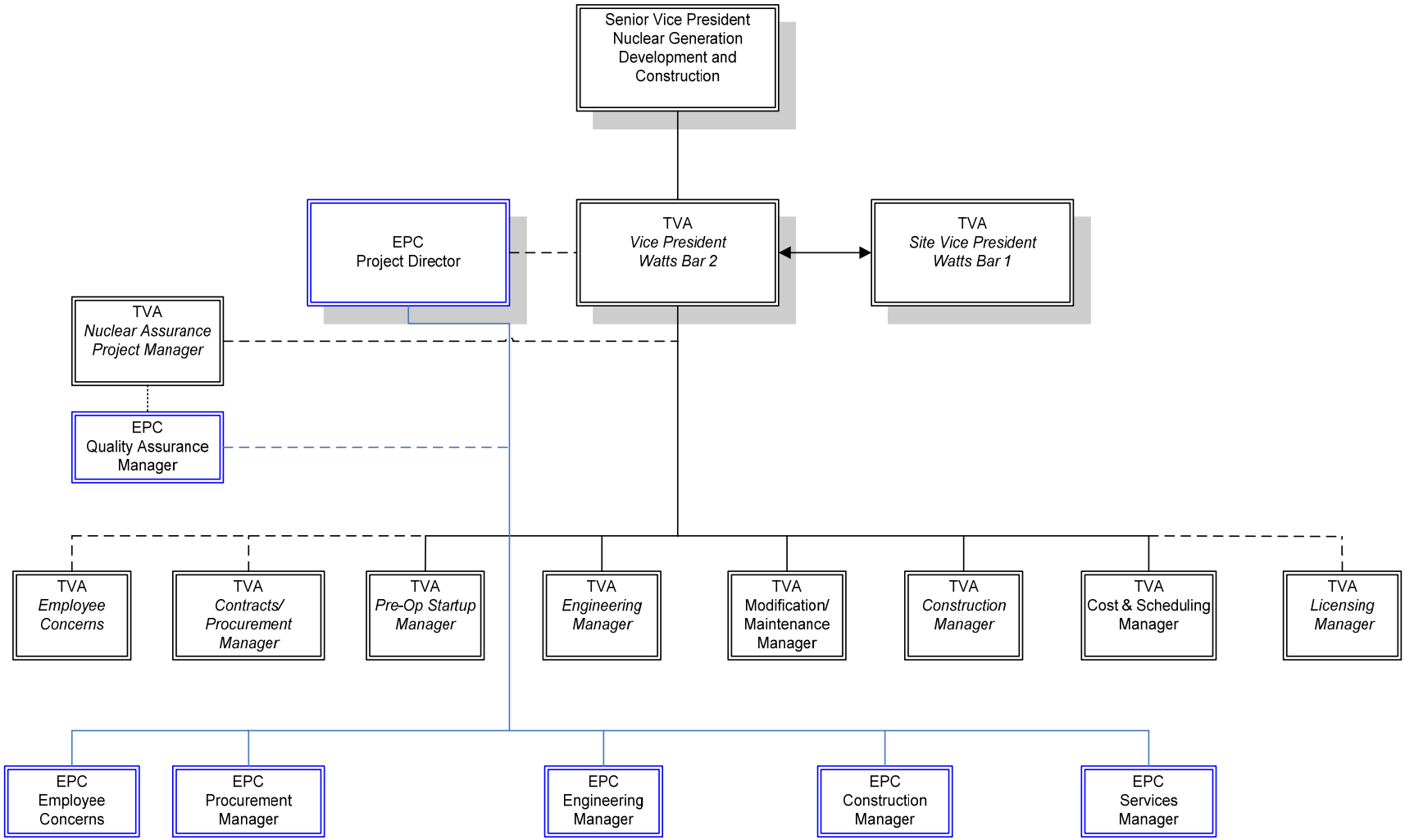

M. Bajestani

WBN Unit 2 – Project Staffing

Current Staffing – Key Areas

- Engineering – Bechtel - 732 / TVA - 55
- Construction – Bechtel Manual - 401 / TVA – 9
  - Non-Manual - 236
- Project Controls – Bechtel - 82 / TVA - 15
- Nuclear Assurance – Bechtel - 42 / TVA - 6
- Supply Chain – Bechtel - 33 / TVA – 7
- Startup Testing – TVA – 44
- Operations – TVA - 16

Future Staffing Forecast – January 2010

- Engineering – ~600
- Construction – ~1200

WBN Unit 2 Integrated Schedule

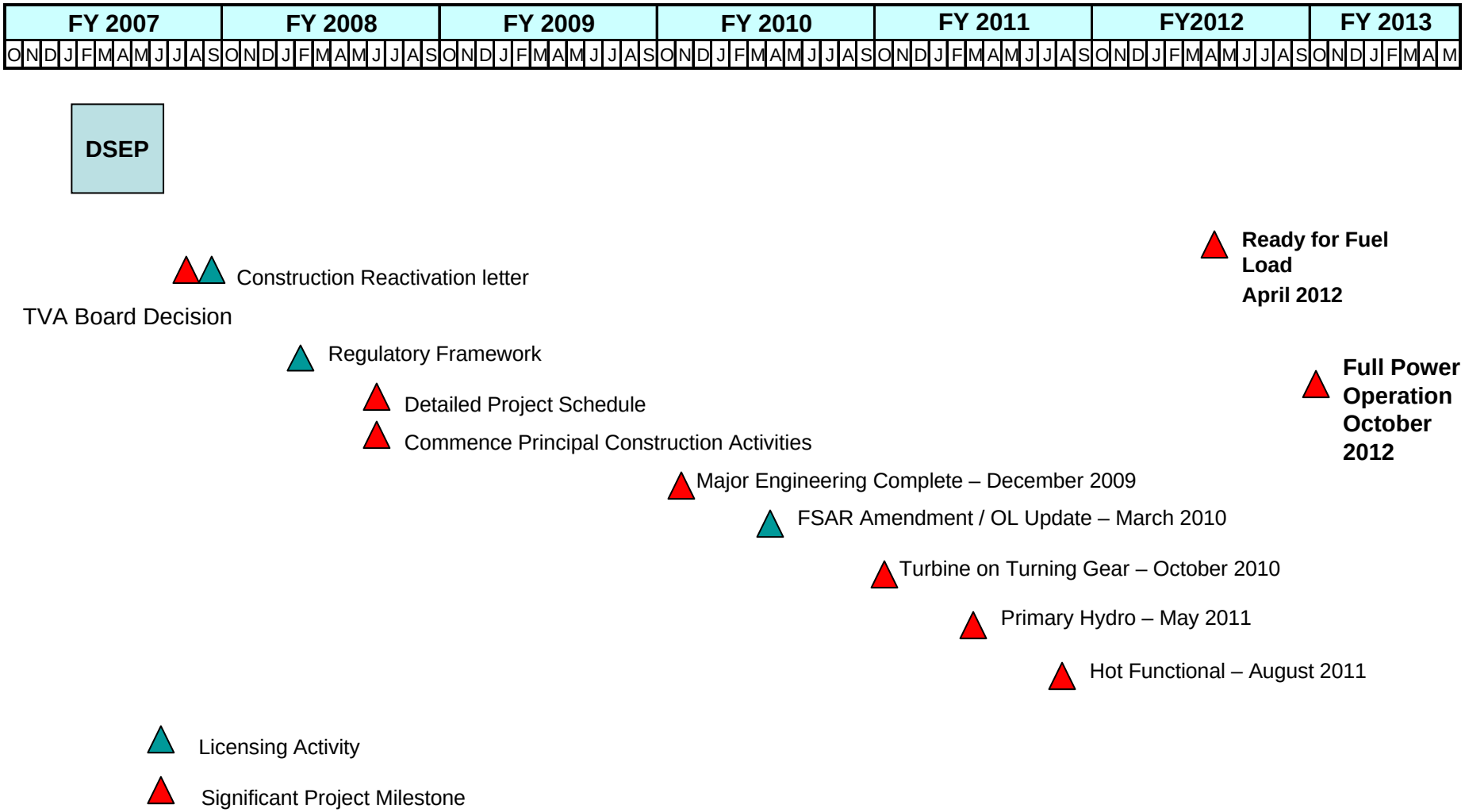

M. Bajestani

WBN Unit 2 Material Condition

Evaluation of Material Condition

- Performed Plant Walkdowns
  - Identify Missing/Removed Components
  - Baseline to Determine Current Configuration of Installed Equipment
    - Electrical
    - Mechanical
    - Civil
- Reviewed Quality Assurance Records to Support ASME Section III Program
- Results Addressed by Engineering Modifications and Refurbishment Program

B. Crouch

WBN Unit 2 Material Condition

As-found condition of internal piping shown below.

Containment Spray Piping – 676’ Pipe Chase

B. Crouch

WBN Unit 2 Material Condition

Centrifugal Charging Pump
2B-B

Pump recently removed for refurbishment. Internal suction piping shown above and discharge at left.

WBN Unit 2 Material Condition

Centrifugal Charging
Pump 2A-A

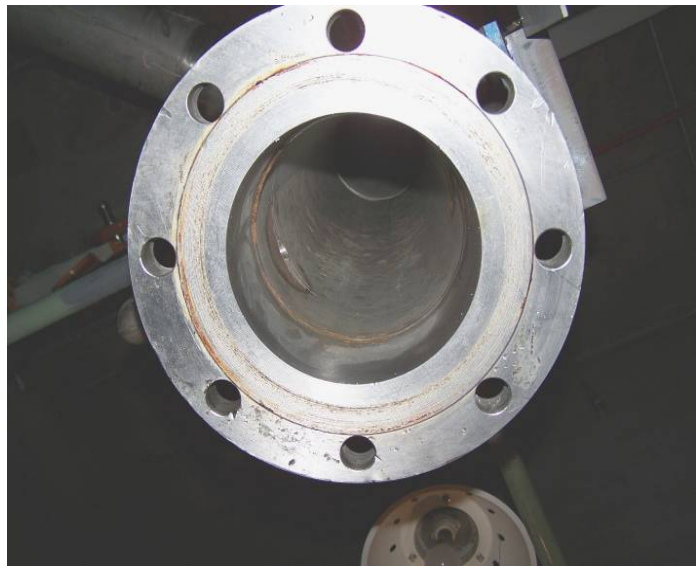

Pump is currently being removed for refurbishment. Internal pump casing shown at left and suction piping at right.

WBN Unit 2 Material Condition

Ventilation Damper

Damper sent off-site to vendor facility for inspection, evaluation and recommended refurbishment and testing requirements.

WBN Unit 2 Material Condition

Refurbishment Program

Equipment Scope

- Safety Related / Non-Quality Related
- Active / Passive

Refurbishment Program Process Steps

- Identification
- Classification
- Inspection/Evaluation
- Refurbishment/Replacement
- Component/System Testing

Required Outcome

- Plant meets original licensing, design and equipment vendor specifications

B. Crouch

WBN Unit 2 Material Condition

Refurbishment/Replacement Commodity Estimates

COMMODITY	TOTAL PROJECT (estimate)
Pumps	80
Motors	90
Breakers	600
Manual Valves	4000
Air Operated Valves	500
Motor Operated Valves	200
Safety/Relief Valves	300

B. Crouch

WBN Unit 2 Material Condition

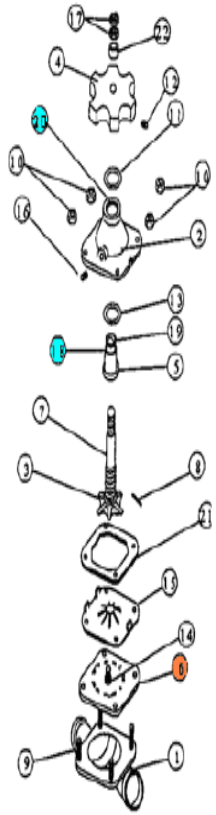

ITEM	DESCRIPTION
1	VALVE BODY
2	BONNET
3	COMPRESSOR
• 4	HANDWHEEL
5	BUSHING
6	DIAPHGRAM
7	SPINDLE
8	SPIROL PIN
9	BONNET STUD
10	BONNET NUT
• 11	SHIM WASHER
12	SET SCREW
13	THRUST BEARING
14	DIAPHRAGM STUD
• 15	FINGER PLATE
16	"V" TYPE VENT PLUG
• 17	JAM NUTS (OR LOCKNUT)
• 18	"O" RING-SEAL COLLAR
19	SEAL COLLAR
• 20	"O" RING BONNET
• 21	GASKET
22	SPACER

• MAY NOT BE PRESENT DEPENDING ON VALVE SIZE OR TYPE.

B. Crouch

WBN Unit 2 Material Condition

12” Swing Check Valve

The refurbishment activity has identified surface indications (right) which could affect the pressure boundary in the bonnet gasket area which will likely require a Code repair.

WBN Unit 2 Material Condition

Data Sheet 1
(Page 1 of 1)

Check Valve Data Sheet

As-Found Inspection: ❑ As-Left Inspection: ❑

CHECK VALVE GENERAL INFORMATION:
(Enter N/A if information was obtained previously or is not available).

UNID _____ Type (Swing, Lift, piston, etc.) _____
W/O No _____ Size _____
Manufacturer _____
Model/Serial No _____

Location: (ENTER in the Remarks Section below the valve proximity to upstream flow disturbance, physical orientation, physical location in plant, and any other pertinent information.)

OPERABILITY CHECK:

Valve operates freely	❑ YES	❑ NO	❑ N/A
Valve internals are clear of sludge buildup corrosion, or debris which could restrict full opening/closing	❑ YES	❑ NO	❑ N/A

WEAR CHECK:				LOOSE PARTS CHECK:			
Disc/Piston OK	❑ YES	❑ NO	❑ N/A	Tack Welds OK	❑ YES	❑ NO	❑ N/A
Anti-rotation device OK	❑ YES	❑ NO	❑ N/A	Set Screws OK	❑ YES	❑ NO	❑ N/A
Hinge Pin OK	❑ YES	❑ NO	❑ N/A	Cotter Pin OK	❑ YES	❑ NO	❑ N/A
Bushings OK	❑ YES	❑ NO	❑ N/A	Retaining Clip OK	❑ YES	❑ NO	❑ N/A
Disc Arm OK	❑ YES	❑ NO	❑ N/A	Retaining Screws/Bolts OK	❑ YES	❑ NO	❑ N/A
Disc Post OK	❑ YES	❑ NO	❑ N/A	Other_____	❑ YES	❑ NO	❑ N/A
Disc Nut OK	❑ YES	❑ NO	❑ N/A	REMARKS/RECOMMEDED ACTIONS:			
Backstop/Body OK	❑ YES	❑ NO	❑ N/A				
Seat Ring OK	❑ YES	❑ NO	❑ N/A				
Spring OK	❑ YES	❑ NO	❑ N/A				
Other_____	❑ YES	❑ NO	❑ N/A				

INSPECTION PERFORMED BY: _____ _____
Field Engineer/Supervisor or Vendor Rep. Date

A copy of this datasheet forwarded to TVA check valve coordinator.

_____ _____
Field Engineer/Supervisor Date

Example Check Valve Data Sheet

B. Crouch

WBN Unit 2 Material Condition

This valve is a 1 1/2”, Hammel-Dahl, Globe valve with an A-40 Pneumatic Diaphragm type actuator. The items subject to refurbishment are the actuator diaphragm and valve packing

B. Crouch

WBN Unit 2 Material Condition

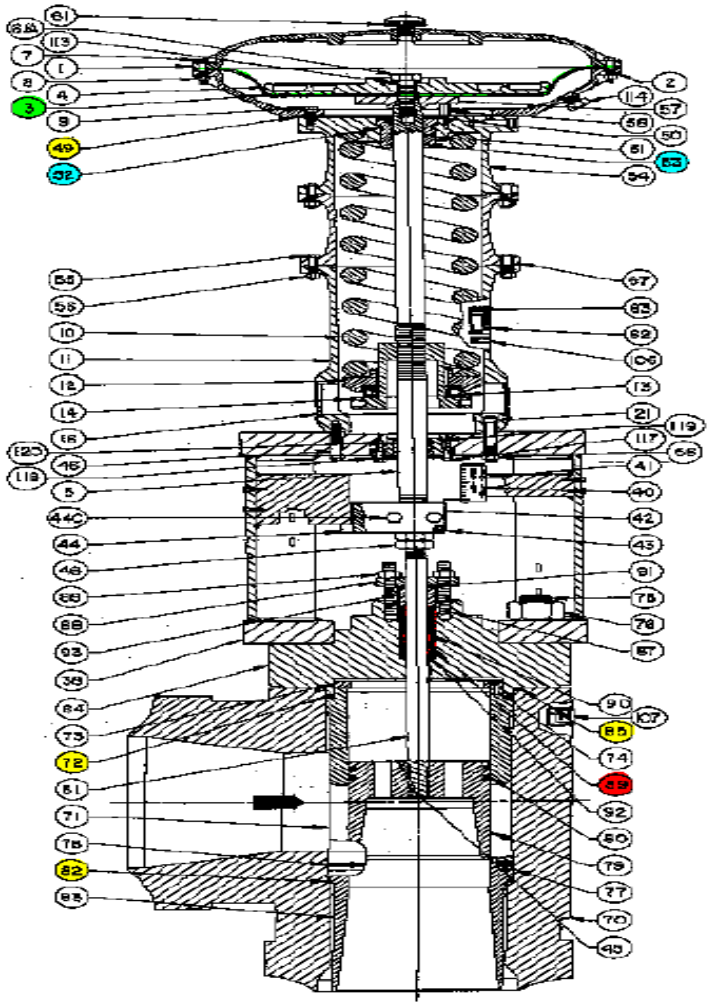

FIND NO.	NO. REQD	PART NUMBER	DESCRIPTION
1	1	3L4481220012	UPPER DIAPHRAGM CASING
2	1	3L4884400012	LOWER DIAPHRAGM CASING
3*	1	2R6370022202	DIAPHRAGM
4	1	1L5241220012	DIAPHRAGM PLATE
6	1	2D4764000012	ACTUATOR STEM
6.1A	1	1A1246000012	CAP SCREW, 1-8 x 3
7	30	1A1160240052	CAP SCREW, 7/16-20 x 2
8	35	1A1403240122	HEX NUT, 7/16-20
9	12	1A2409240052	CAP SCREW, 1/2-13 x 1-1/4
10	1	1U6314000012	ACTUATOR SPRING
11	1	2SA0702000012	SPRING CASE
12	1	1L4408220012	SPRING SEAT
13	1	1H7331390992	THRUST BEARING
14	1	1L6249220012	SPRING ADJUSTING SCREW
15	1	1H7338000CA2	POWER BAND ASSEMBLY
21	8	1H7348220992	CAP SCREW, 1/2-13 x 4
39	1	5SA0789000012	YOKE
40	1	1H7481390992	TRAVEL INDICATOR SCALE
41	2	1A3431290992	MACHINE SCREW, 10-24 x 1/4
42	1	1H7314590992	TRAVEL INDICATOR
43	2	1K7315290992	MACHINE SCREW, 6-40 x 1/4
44	1	2LA5387000012	STEM CONNECTOR
44C	2	1A3147240052	CAP SCREW, 1/2-13 x 2-1/4
46	1	1V3340360072	GROOVE PIN
48	4	1A3132240052	CAP SCREW, 1/2-13 x 2-3/4
49	2	0W0738241221	HEX NUT, JAM, 1-1/4-12
49*	1	1N3991400022	GASKET, 8-3/4 x 12-13/16 x 1/32
50	1	1H7405700022	SNAP RING
51	1	1H7411400012	SEAL BUSHING
52*	1	1O4392000992	O-RING, 2-7/8 x 3-1/4 x 3/16
53*	2	1O5439000992	O-RING, 1-5/8 x 2 x 3/16
54	1	3L5242220012	SPRING CASE ADAPTER
56	24	1A3615240052	CAP SCREW, 1/2-13 x 2
58	30	1A3412240122	HEX NUT, 1/2-13
57	1	1K4089240392	LOWER DIAPHRAGM PLATE
60	3	1H7440240082	TRAVEL STOP
61	1	1D3215000042	VENT
62	1	1K3261390992	NAMEPLATE
63	6	1A3912290992	DRIVE SCREW, NO. 2 x 3/16
67	1	2U5316000CA2	SPRING CASE EXTENSION
70	1	4SA0614000012	VALVE BODY
71	1	3SA4170000012	CAGE
72*	1	1U9614000012	CAGE GASKET, 9-5/8 x 10-5/8 x .175
73*	1	1U7430000CA2	ASSEMBLY RING
74	18	1F1448320992	CAP SCREW, 5/16-18 x 3/4
75	12	1SA9191000012	STUD, 1-3/4-8 x 10-1/2
76	12	1N9892000022	HEX NUT, 1-3/4-8
77	12	1U7813000012	CAGE PIN
78	1	1U8610000012	RETAINING SPRING
79*	1	3V4113000092	VALVE PLUG
80*	2	1U2617000012	PISTON RING
81*	1	1V4112000022	STEM
82*	1	1V3813000012	SPIRAL WOUND GASKET, 10-1/16 x 19-9/16 x .175
83*	1	3U7345000012	SEAT & LINER
84	1	3SA4950000012	BONNET
85*	1	1V6014000012	SPIRAL WOUND GASKET, 19-13/16 x 11-13/16 x .175
86	1	3W0286250052	PACKING FLANGE
87	2	3W0889310092	STUD, 3/4-10 x 4-1/4
88	2	1A3861240112	HEX NUT, 3/4-10
89*	8	1D7630000122	PACKING RING, 1-1/4 x 2 x 3/8
90	2	1V7024300072	LANTERN RING
91	1	1J6730000332	UPPER WIPER
92	8	1J6730300012	PACKING BOX RING
93	1	1H8894400072	PACKING FOLLOWER
94	1	4SA0940-19	BAILEY POSITIONER
97	4	5SA0794000012	MOUNTING BRACKET
98	1	TYPE 67FR	FILTER REGULATOR
99	2	1P4484001992	NATIONAL ACME LIMIT SWITCH 8A170 B4100
110	1	3SA0889000012	MOUNTING PLATE
111	1	TYPE 64R	PRESSURE REGULATOR
112	1	1H8882240092	MOUNTING BRACKET
113	1	TYPE 361A	VOLUME BOOSTER
114	4	1P4320A184V	ASCO SOLENOID VALVE
116	4	3SA3001000012	MOUNTING PLATE
119	1	1SA0941000012	NAMEPLATE
117	1	1SA0942000012	NAMEPLATE, NUCLEAR
118	1	TYPE 341	TRANSDUCER WARNER
120	4	TYPE 111	NEEDLE VALVE
121	1	1SA0941000012	ANGLE NEEDLE VALVE
115	1	1U1183240022	SPACER
114	1	0Z0201340082	PIPE PLUG, 3/8-18 NPT
117	4	1A3823240082	CAP SCREW
115	1	1SA1948000012	YOKE BUSHING RETAINER
116	1	1U8733000012	YOKE BUSHING HOLDER
120	1	1SA1949000012	BUSHING

* RECOMMENDED SPARE PARTS: 3, 49, 52, 53, 72, 73, 79, 80, 81, 83, 85, 89, 94
PRESSURE RETAINING PARTS: 72, 73, 79, 84

B. Crouch

WBN Unit 2 Material Condition

CRF Unit 2	Air Operated Valve Refurbishment and Setup (NQR)	25402-000-GPP-0000-MI0013.N Rev. 0001 Page 44 of 59

Appendix C
(Page 3 of 3)

AOV Task Data Sheet

WO# _____ UNID _____

1.0 AOV TASK SUMMARY

[1] Work Performed During This Activity (check all that apply):

- ❑ Actuator Diaphragm Replaced
- ❑ Actuator O-rings/Seals/Packing Replaced
- ❑ Valve Disassembled and Refurbished
- ❑ Valve Repacked
- ❑ Valve Packing Load Verified
- ❑ Adjusted/Set Travel
- ❑ Regulator Replaced/Setting Verified
- ❑ Solenoid Valve Replaced

Approval of As-Left Data

_____ Field Engineer _____ Date

Example Air Operated Valve Refurbishment Sheet

B. Crouch

WBN Unit 2 Material Condition

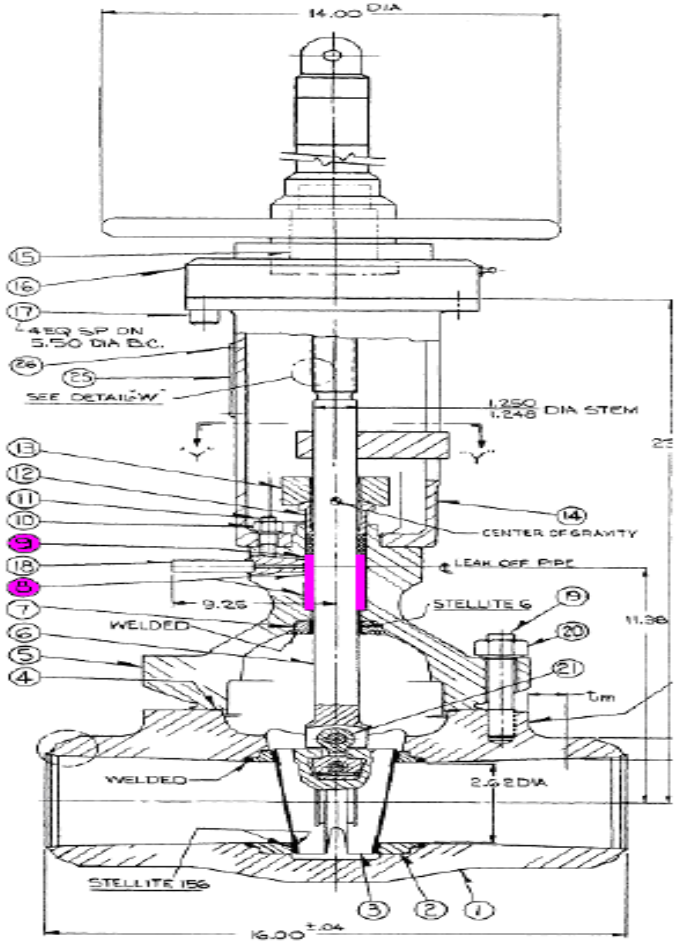

B. Crouch

WBN Unit 2 Material Condition

TVA Valve Packing Data Sheet

Facility:	WATTS BAR UNIT 2 STARTUP	**Type:**	Valve	**Status:**	Future
Unit:	2	**Manufacturer:**	MASONEILAN	**Prepared By:**	
System:	006	**Model:**	35-35200		**Unverified**
Tag:	2-LCV-006-0015B	**Valve Size:**	6	**Work Order:**	08-951643-000
Location:	TURB			**Rev:**	0

VALVE DATA

Actuator Type:	AOV
Stem Orientation:	

SPECIFICATIONS

Gland Stud Torque Pref:	46 FT-LBS
Gland Stud Torque Min:	23 FT-LBS
Calculated Friction Pref:	2651
Calculated Friction Min:	
Packing Stress Pref:	4000
Packing Stress Min:	2000

CONFIGURATION SFW5GGG5WBW

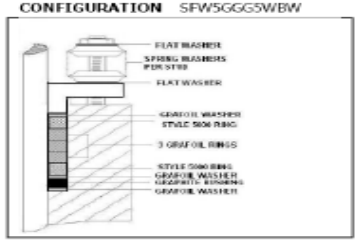

COMMENTS

CLASS/TYPE	SUPPLIER PART NUM	STOCK CODE	QTY
BOLTING/Stud	1000042473	WBGB004	1
PACKING/Bushing	B5701500021	CJJ735Q	1
PACKING/Set	5470720	CFP299B	1
PACKING/WASHER	6200720	CPH281C	4
WASHER/Flat	1000101100	CPH346A	4
WASHER/Spring	62H177	BPV576C	1

PACKING DATA — VERIFIED

Packing Type:	5000/6300J (BRAIDED GRAPHITE/GRAFOIL)	☐
Number of Rings:	5	
Packing Set Height:	1.875	

STEM and BOX DATA

Stem Dia (+.005/-.010):	1.5 in	☐
Box Dia (±0.010):	2.250 in	☐
Box Depth (± 0.031):	2.5 in	☐
Gland Box Angled:		
Gland Insert:	in	☐
Gland Follower Lgth:		

STUD DATA

Gland Stud Diameter:	0.625 in	☐
Number of Studs:	2	☐
Gland Stud Type:	STUD	
Wrench Size:	in	☐
Total Stud Length:		

BUSHING DATA

Upper Bush HT:	in	☐
Lower Bushing HT:	in	☐

PORT DATA

Port Type:		☐
Port Active:		☐
Port Depth:	in	☐
Port Dia:	in	☐

LIVE LOADING

Live Loaded:	Yes	☐
Springs/Stud:	8	☐
Spring Cfg:	SERIES	☐
Flat Washers Per Stud:	2	☐

INSTALLATION DATA

REPACK ☐ RETORQUE ☐

Gland Follow Take Remain:	0
No of Strokes:	
As Left Gland Stud Torque:	

Date Printed: 5/26/2009 **Return Completed Data Sheet to the Valve Packing Specialist**

Example Valve Packing Data Sheet

B. Crouch

WBN Unit 2 Material Condition

Improvement Initiatives:

- Reduction of Appendix R Operator Manual Actions
- Replace All 8 ERCW Pumps to Improve Flow Margin
- Replacement of Piping Susceptible to Flow Accelerated Corrosion (FAC)
- Glycol Chiller Replacement
- Double 500 kV Breaker Arrangement in Switchyard
- Add Zinc Injection System for Passivation
- Add ERCW Strainer Bypass for On-Line Maintenance
- Retube Main Condenser
- Intake Pumping Station Diver Barrier
- Pressurizer Weld Mechanical Stress Improvement Process (MSIP)
- Additional Offsite Power Source
- Split Pin Replacement Prior to Operation
- Reduction of Pipe Support Snubbers
- Improvements to Containment Sump Performance

B. Crouch

WBN Unit 2 Project Activity Status

Engineering

- Overall Progress – 46% complete
  - Design Modifications – ~ 55% complete
  - Calculations – ~ 76% complete
  - Corrective Action Programs and Special Programs – ~ 40% complete
- Historical Design Basis Quality Records
  - Retrievable, Legible, Usable
- On Track to Complete Majority of Engineering by December 2009

B. Crouch

WBN Unit 2 Project Activity Status

Licensing

- Regulatory Framework
- Final Safety Analysis Report
  - Four Milestone Submittals – April, August, November, January
  - Includes Submittal of Applicable Technical Specifications and Generic Communications
- Corrective Action Programs and Special Programs
  - 27 of 29 – Closure Methodology Reviewed and Approved by NRC
  - Quality Records and Replacement Parts Programs Under Review
- Historical Documents
  - ~37,000 Historical Documents Evaluated for Applicability
  - Population Included: Concerns, Non-Conformances, Commitments
  - Applicable Items being Tracked to Closure

B. Crouch

WBN Unit 2 Project Activity Status

Construction

- Overall Progress – >15% complete
- Construction Focus Areas
  - Refueling Outage – Pre-Outage work
  - Refurbishment Activities
  - Increase Construction Backlog of Ready to Work Activities
- Critical Path
  - Essential Raw Cooling Water
  - Probabilistic Risk Assessment
- Near Critical Path
  - Reactor Coolant System
  - Reactor Protection – Eagle 21
- On Track to Complete Construction Activities to Support Current Fuel Load Schedule

WBN Unit 2 – Unit Separation & Security

Unit Separation Program

- Physical and Operational separation of operating unit systems and components from construction accomplished by use of lifted wires, removal of valve handwheels, installation of blind flanges
- Fencing and chain
- Tagging and marking
- Unit 2 craft personnel wear YELLOW hardhats
- Designated walkways
- Construction Access

E. Freeman

WBN Unit 2 – Unit Separation & Security

Unit Separation Program

- Separate Organization
- Work in operating spaces reviewed daily
- Work Orders reviewed by experienced Operations personnel
- Problem Evaluation Reports (CAP) reviewed for operability by Operations personnel
- Work on Common systems uses WBN Unit 1 processes

E. Freeman

WBN Unit 2 – Unit Separation & Security

Security

- Site Security Plan Addresses Both Units
  - No Change to Security Plan As a Result of WBN Unit 2
  - Some Implementing Procedure Revisions Will Be Required
  - New 10 CFR 50.73 Rule Changes Will Be Incorporated
- Cyber Security Rule
  - New Rule Will Be Implemented
- Aircraft Rule
  - WBN Unit 2 Exempted from Rule

E. Freeman

Conclusion

In Summary TVA Has:

- Established the Existing Condition of WBN Unit 2
- Evaluated the Lessons Learned From WBN Unit 1 Operation
- Developed and Implemented Programs to
  - Install New Equipment Where Necessary
  - Refurbish Existing Equipment
  - Improve Material Condition and Equipment Performance Where Appropriate
- Improvement Initiatives
- To Ensure Safe, Reliable and High Capacity Operation of Watts Bar Unit 2