MOL.20040708.0386

DOE/SNF/REP-090
Rev. 0
QA: QA

United States Department of Energy

National Spent Nuclear Fuel Program

Packaging Strategies for Criticality Safety for "Other" DOE Fuels in a Repository

CONTROLLED COPY
NSNF DOCUMENT CONTROL
COPY NO. 490

June 2004

U.S. Department of Energy
Assistant Secretary for Environmental Management
Office of Nuclear Material and Spent Fuel

This document was developed and is controlled in accordance with NSNFP procedures. Unless noted otherwise, information must be evaluated for adequacy relative to its specific use if relied on to support design or decisions important to safety or waste isolation.

DOE/SNF/REP-090
Rev. 0

Packaging Strategies for Criticality Safety for "Other" DOE Fuels in a Repository

June 2004

WBS No. A.1.01.00.03.0B

Idaho National Engineering and Environmental Laboratory
Idaho Falls, Idaho 83415

Prepared for the
U.S. Department of Energy
Assistant Secretary for Environmental Management
Under DOE Idaho Operations Office
Contract DE-AC07-99ID13727

REVISION LOG

Revision	DAR No.	Issue Date
0	NSNF-486	June 24, 2004

Packaging Strategies for Criticality Safety for "Other" DOE Fuels in a Repository

June 2004

L. L. Taylor (Signature) **Date:** 6/23/04

National Spent Nuclear Fuel Program
Document Preparer

H. H. Loo (Signature) **Date:** 6/23/04

National Spent Nuclear Fuel Program
Technical Lead

N. S. MacKay (Signature) **Date:** 6/23/04

National Spent Nuclear Fuel Program
Program Support Organization Quality Engineer

P. D. Wheatley (Signature) **Date:** 6.24.04

National Spent Nuclear Fuel Program
Program Support Organization Manager

ABSTRACT

Since 1998, there has been an ongoing effort to gain acceptance of U.S. Department of Energy (DOE)-owned spent nuclear fuel (SNF) in the national repository. To accomplish this goal, the fuel matrix was used as a discriminating feature to segregate fuels into nine distinct groups. From each of those groups, a characteristic fuel was selected and analyzed for criticality safety based on a proposed packaging strategy. This report identifies and quantifies the important criticality parameters for the canisterized fuels within each criticality group to: (1) demonstrate how the "other" fuels in the group are bounded by the baseline calculations or (2) allow identification of individual type fuels that might require special analysis and packaging.

SUMMARY

The U.S. Department of Energy (DOE) spent nuclear fuel encompasses a wide range of configurations. Dimensions can range from fractional inches to feet. Various cladding materials include stainless steel, aluminum, zirconium, and graphite. Fissile loads can vary from gram to kilogram quantities in a single fuel handling unit (FHU). Fissile isotope species include ^{233}U, ^{235}U, and ^{239}Pu. Enrichment values span a range for depleted uranium up to 100%. Fuel matrix material includes metals, oxides, hydrides, carbides, and others. This wide variety of fuel properties complicates the strategy needed to provide suitable packaging.

This report provides options for strategies that might be considered with regard to packaging DOE spent nuclear fuel for acceptance by the repository. Perhaps just as important, what this report does not do is attempt to qualify any specific design or prescribe a given packaging for all the "other" DOE spent nuclear fuel. The spent fuel database contains much of the information (dimensions, fissile per FHU) that can be used to develop proposed packaging strategies. Ultimately, much of the underlying information in support of the spent fuel database will be needed to support detailed criticality calculations as each particular fuel is moved out of storage and into canisters.

This report includes many of the details associated with the set of baseline fuels about which criticality analyses have been performed. These analyses have been done in an attempt to establish packaging conditions that must be met to ensure criticality safety for all conceivable repository conditions. This report also establishes the conditions generally associated with the criticality analyses done for the baseline fuels, then attempts to demonstrate how all the other fuels within a given criticality category are bounded by the baseline fuel calculations. Comparisons are available for parameters (on a per canister basis) such as linear loading (g/cm), total fissile (kg), fissile isotope, enrichment (%), atom-densities (atoms/b-cm), moderator/fissile ratio (H/X), and poison/fissile ratio (Gd/X where appropriate). Such a comparison does not automatically qualify the other fuels for packaging. They are all expected to undergo an independent criticality analysis at the time of packaging for both intact/dry and intact/flooded configurations.

Spent nuclear fuel disposal in a standard canister may involve packaging fuel using a basket (with or without poisoning) to facilitate loading and enforce fissile load limits, or may even allow packaging without a basket. For those few cases identified in this report where fissile loads in a canister exceed the baseline fuels analyzed, derating the canister by blinding off basket positions represents the most viable option.

The issue of assembling/loading fuels within a basket has several implications. In cases where baskets are continuous for the full length of the canister, the basket may be preinstalled in the canister prior to movement of the canister into the hot cell. Other baskets that can be stacked inside the canister would be loaded with fuels in the hot cell and then be loaded in the canisters. When poisons are required in a canister, current preferences would incorporate the poisons in the basket structure itself or preloading beads such as for the Fermi

basket. Other poisoning requirements may require addition of some type of poisoned bead material; this form of poisoning and its feasibility of installation remains to be developed.

There is an expectation of vertical loading of all baskets and fuels within a canister. However, none of the features that enable vertical movement of fuels or baskets, e.g., grapples, lifting bails, positioning aids, have been developed at this time. The stacked baskets necessarily have a bottom plate (Type 1a, Type 4, Type 5) and may have a surrounding sleeve (Type 1a) to help constrain the vertically oriented fuels.

Because of the processes involved in drying the fuels to some established standard, loading and then sealing the canister dictates only a selected number of sites will be qualified to accomplish this work. Remote capabilities are needed beyond just picking up fuel pieces and placing them in a basket or canister. Some of these capabilities must include:

- Vertical heights to deal with 15-ft fuels going into 15-ft canisters
- Cranes
- Manipulators
- Welding—remote shield plugs
- Drying fuel prior to loading in a canister; special cases may allow drying after packaging in a canister.

Many fuels by themselves will result in only a partial canister-fill. So, other fuels within the same category and those that fall within the space constraints of a basket position might be used to fill those basket positions. This generates what might be termed a "hybrid" fuel load that might be qualified with a detailed criticality analysis for the intact fuel/basket combinations at the time of loading. There is one example of hybrid packaging presented in Appendix A, but it should not be taken as a prescriptive approach that only these fuels may be packaged together in this particular configuration.

Basket designs perform several functions, but surprisingly the primary one is not to ensure criticality safety by geometry. Basket designs enforce an initial geometry on which to perform baseline calculations for intact criticality configurations. They also enforce a fissile load limit for a canister. The information contained in this report might only be considered as a conceptual design, promoting the strategy that offers an approach to packaging for minimizing criticality risk for the postclosure case associated with repository disposal.

Comparisons against baseline (and often times optimal) conditions are provided for each baseline fuel and each other fuel for which there is information to provide a conceptual basket or canister design. In the case of calculated H/X ratios, they reflect an idealized quantity based on an assumed uniformity of distribution for the fissile material and a water fill of the calculated void space

within any basket/canister configuration. Where a Type 1a basket might be used with a Group 8 fuel, the baseline fuel for comparison uses the baseline fissile concentration to compare the Type 1a fuel basket against the proposed Group 8 fissile load.

Use of poisoned baskets for fuel packages with much less than baseline fissile loads for that particular basket have not determined whether poisons are required for those lowered fissile quantities. An example with TRIGA fuel: standard fuels have a much higher ^{238}U component in the fuel matrix, which acts as a neutron absorber. These standard fuels are demonstrably less reactive than the 70%-enriched FLIP fuels, so poisoning requirements should be less. However, no analysis has examined these fuels against a baseline configuration with five times the fissile loading or unit length of the canister. Many possible fuel loads for a given basket are <30% of the baseline configuration that is supported by a qualified analysis. This may be the result of decreased fissile load per FHU and lower enrichment. At some to-be-determined threshold, there may be a resultant fissile load below which no poisoning is required in the canister. This lower threshold has yet to be determined. The alternative approach would be to include poisoning in all baskets using the C-4 + Gd alloy.

This report does not attempt to address hybrid loads between fuel groups in the same canister, although there may only be a fractional canister's worth of fuel to fill the various basket positions.

Comparisons of H/X ratios in this report are calculated in the following manner. Hydrogen mass is based on the weight fraction of water that can fill the calculated void volume inside a filled canister. That calculation is based on the initial void inside the canister minus the displaced volume provided by the basket and minus the displaced volume created with the fuel. Fuel volume was calculated by the cross section of the fuel shape times its length. Void space within the fuel was calculated in some cases. In most cases, pin (Fast Flux Test Facility) or plate assemblies (Shippingport Pressurized Water Reactor) assumed a 50% void space. For bare pins (TRIGA), there was an assumed 2% void space.

Other fuel analyses need to prove (basically) that the linear loading, total fissile per canister, enrichment, atom-densities, and H/X ratios for any package other than baseline fuels are either less than or (in the case of H/X ratio) moving away from a more reactive condition.

FOREWORD

The premise of any U.S. Department of Energy (DOE) spent nuclear fuel (SNF) canister packaging for criticality concerns has evolved from the approach adopted in the *Disposal Criticality Analysis Methodology Topical Report*. Within these guidelines, there was a need to establish criteria for fissile loadings and accident scenarios consistent with the various types of fuels within the DOE fuel inventories.

There is an important distinction to make between criticality safety in the preclosure environment versus criticality risk under the regulatory control in a postclosure environment. Criticality safety rules for operational facilities that must deal with movement of enriched fissile materials rely on imposition of rules that require failure of controls based on occurrence of two independent events before a criticality can occur. The regulatory guidance of 10 CFR 63 provides a risk-based approach to criticality.

The approach taken in any of the proposed fuel loads for the DOE standard canisters was to maximize the fissile load in a canister while being able to minimize criticality risk for any individual canister. With this condition established, the criticality analyses focused on horizontal orientation of individual SNF canisters within a codisposal waste package. All the criticality analyses included calculations that provided a calculated k_{eff} for fuels and baskets (if any) for intact conditions, both dry and wet. These intact analyses would not be specific to any particular package orientation, but would certainly satisfy the guidelines established for criticality safety in the preclosure environment for any intact fuel/basket configurations. Subsequent analyses should address all conceivable conditions that could be expected within the waste package for postclosure. The goal is identification of the most reactive configuration that could be achieved through the addition of water to both the waste package and the SNF canister. Any such analyses should account for various degrees of degradation and radial redistribution of fuel both within the SNF canister and when mixed with the degradation products of the high-level waste glass within the waste package. The one obvious exclusion to any of these analyses was the absence of a mechanism to promote axial redistribution, i.e., vertical canister orientation of fissile material for any of the degradation scenarios that included water.

Characteristic conditions of the DOE fuels were considered for any proposed fuel loading inside a single canister based on (a) total fissile mass, (b) linear loading (mass per unit length), (c) enrichment of the fissile isotopic species in the fuel, and (d) H/X ratio. On these bases, analyses established a critical limit of a calculated $k_{eff} + 2\sigma < 0.93$ for highly enriched fuels with suitable supporting benchmark values, and a $k_{eff} + 2\sigma < 0.92$ for fuels with benchmarks further from the range of applicability. Fuels with commercial enrichments (<6.0%) used a $k_{eff} + 2\sigma < 0.97$.

To these ends, some of the proposed fissile loads were "volume limited" with respect to the fissile mass that could be installed in a canister such that no amount of fuel or conditions within the confines of a standard canister would exceed the critical limit for DOE fuel. Other fuel, such as Shippingport

Pressurized Water Reactor, was so robust in construction that no degradation and no reconfiguration could occur. Postulated degradation conditions for some of the canisters revealed calculated k_{eff}s in excess of the proposed critical limit. These conditions were generally addressed through the addition of gadolinium as a neutron poison. Consequential calculations then addressed the solubility, retention, and distribution of this gadolinium as a poison.

Numerical values found predominantly in Appendix A of this document used information contained within the SNF Database, Version 5.0.1. The information for the baseline fuel analyses used values from separate documents that may have also been used to populate the database fields. The important distinction is that this report simply provides a basis for comparing other fuels in the DOE inventory against baseline calculations. No fuel packages will be qualified for the repository on the basis of these or any other calculations until there is an approved set of canister/basket designs with supporting calculations using accepted dimensions, confirmation of contents, and calculations for criticality, thermal, and radiation shielding.

ACKNOWLEDGMENTS

Allan Bringhurst for his help with accessing and formatting the information from the spent fuel database into this report and the check of that information contained in Appendix A of this report.

Denzel Fillmore for his perspective on the spent nuclear fuel in general and for specific insights within the local spent fuel program.

Leland Montierth for his continued involvement with criticality analyses and useful perspectives on the parameters important to safely packaging the spent fuel. Lee also provided the independent check of the calculated values, e.g., linear loading, atom-densities, H/X ratios calculated in Appendix A.

CONTENTS

ABSTRACT 5

SUMMARY 7

FOREWORD 11

ACKNOWLEDGMENTS 13

ACRONYMS 21

NOMENCLATURE 23

1. PURPOSE 25

1.1 Quality Assurance 25

1.2 Strategy 25

1.2.1 Horizontal Versus Vertical Orientation of an SNF Canister 33
1.2.2 Radial Versus Axial Reconfiguration of Fissile Materials 33

1.3 Heavy Metals 33

1.4 Moderator/Uranium Ratio 34

1.4.1 Hydrogen/Uranium Ratios 34
1.4.2 Comparative H/X Ratios 35

1.5 Enrichment 39

1.6 Linear Loading in SNF Canisters 39

1.7 Fuel Construction 41

1.7.1 Solid Body Fuel 41
1.7.2 Pins or Plates 41

1.8 Packaging Limitations 41

1.8.1 Initial Packaging—Dry (Carbide) Versus Wet Loading (N-reactor) 41
1.8.2 Interim Storage at Shipper—Dry Canister Array 42
1.8.3 Transportation Cask 42
1.8.4 Interim Storage at Repository 42
1.8.5 Postclosure at Repository 43

2. CANISTER FEATURES 44

2.1 Canister Designs 44

2.1.1 18 Inch—Short 44

2.1.2 18 Inch—Long 44
2.1.3 24 Inch—Short 44
2.1.4 24 Inch—Long 45
2.1.5 Multi-canister Overpack 45
2.1.6 Application 45
2.1.7 Canister Materials of Construction 47
2.1.8 Internal Sleeve 47
2.1.9 Basket 47
2.1.10 Positioning Fuel Elements at Loading 48
2.1.11 Poisoned Canisters 48
2.1.12 Nonpoisoned Canisters 49

3. SHAPES 51

3.1 Basket Designs 51

3.1.1 Fuel Cross-section Designs 52
3.1.2 Basket Heights 52
3.1.3 Basket Bottom Plate 53
3.1.4 Basket Materials of Construction 53
3.1.5 Other Materials 54

3.2 Various Basket Designs 54

3.2.1 Aluminum Fuels 55
3.2.2 MCO (N-reactor and Single Pass) 56
3.2.3 Type 3—Wheel/Spoke 57
3.2.4 UZr/UMo (Fermi) 59
3.2.5 37 Tubes (TRIGA-FLIP) 59
3.2.6 Box or Cylinder 60
3.2.7 Rectangle (Shippingport LWBR Seed) 63
3.2.8 Quadrant Type 7 63

4. BASELINE FUEL CHARACTERISTICS (SINGLE CANISTER) 65

4.1 UAl_x 65

4.1.1 ATR 65
4.1.2 MIT and ORR 65

4.2 U-Metal 67

4.2.1 N-reactor/Mark 1A 67
4.2.2 N-reactor/Mark IV 67

4.3 MOX (FFTF) 67

4.4 UZr/UMo (Fermi) 70

4.5 $UZrH_x$ (TRIGA-FLIP) 70

4.6 HEU Oxide (Shippingport PWR) 74

4.6.1 HFIR (outer) 76
4.6.2 HFIR (inner) 76

4.7 U/Th Oxide (Shippingport LWBR) 76

4.8 U/Th Carbide (Ft. St. Vrain) 76

4.9 LEU Oxide (TMI-2) 81

4.10 HIC 84

4.11 Hybrid Fuel Loadings 84

5. FISSILE MATERIAL CALCULATIONS 85

5.1 Fissile per FHU 85

5.2 Fissile per Canister 85

5.3 Beginning-of-Life Versus End-of-Life 85

5.4 Poisons 86

6. CONCLUSIONS AND RECOMMENDATIONS 87

6.1 Future Activities 88

7. BIBLIOGRAPHY 90

8. REFERENCES 93

Appendix A—Proposed Fissile Loading for SDCs (Nine Fuel Groups) 95

FIGURES

1a. Methodology for selecting standard disposal canisters 28

1b. Methodology for selecting standard disposal canisters 29

2. Masses of spheres of homogeneous water-moderated U(93.2) as functions of ^{235}U density 37

3. Standard 18-in. spent nuclear fuel canister 46

4. Ten-compartment basket (Type 1a) layout for ATR fuel 53

5. Relative scale comparison of fuels that will fit into a Type 1a basket 55

6. Fuel position layout for Mark 1A fuel in an MCO basket 57

7. Fuel position layout for Mark IV fuel in an MCO basket 58

8. Wheel-and-spoke basket (Type 3) for FFTF assemblies and IDENT-69s 59

9. Cross-section layout of a Type 4 basket for Fermi fuel. 60
10. Cross-section layout for Type 5 basket for TRIGA fuel 61
11. Cross-section for a Type 6 basket 62
12. Type 6a basket for HFIR (inner) and TMI-2 62
13. Cross-section of a Type 6b basket—HFIR (outer) 63
14. Type 6c basket for Shippingport LWBR (seed) 64
15. Generic (unqualified) Type 7 basket for proposed HICs 64
16. ATR fuel element 66
17. N-reactor fuel elements 68
18. FFTF driver fuel assembly 69
19. FFTF fuel pin 69
20. Fermi fuel pin details 71
21. Fermi pins inside existing cans 72
22. TRIGA fuel element configurations 73
23. Conceptual canister for TRIGA fuels. 74
24. Seed fuel cluster with cruciform control rod channel 75
25. HFIR inner and outer assemblies (combined) 77
26. LWBR seed assembly and individual rods 78
27. Typical Ft. St. Vrain fuel block 79
28. Typical Peach Bottom Core 2 element 80
29. Typical commercial PWR assembly 82
30. TMI-2 canister sketches 83

TABLES

1. DOE spent nuclear fuel quantities 30
2. DOE spent nuclear fuel Appendix A summary 32
3. Calculated H/X ratios 36
4. Empty spent nuclear fuel canister weights 40
5. Spent nuclear fuel baskets and applicable fuels 47

A-1. Worksheet listing 96

A-2. Canister count summary 98

A-3. UAl_x fuel category 99

A-4. U metal fuel category 105

A-5. MOX fuel category 107

A-6. UMo fuel category 109

A-7. $UZrH_x$ fuel category 111

A-8. HEU oxide fuel category 115

A-9. U-Th oxide fuel category 117

A-10. U-Th carbide fuel category 119

A-11. LEU oxide fuel category 121

ACRONYMS

ASTM	American Society for Testing and Materials
ATR	Advanced Test Reactor
BOL	beginning-of-life
DOE	U.S. Department of Energy
FFTF	Fast Flux Test Facility
FHU	fuel handling unit
FLIP	Fuel Life Improvement Program
Gd/X	gadolinium to fissile ratio
H/X	hydrogen/fissile ratio
HEU	highly enriched uranium (>20% enrichment)
HFIR	High Flux Isotope Reactor
HIC	high-integrity canister
HLW	high-level waste
LEU	low-enriched uranium (<5% enrichment)
LWBR	light water breeder reactor
MCNP	Monte Carlo N-Particle (computer software code)
MCO	multi-canister overpack (specific to N-reactor fuels)
MEU	medium-enriched uranium (>5% and <20% enrichment)
MIT	Massachusetts Institute of Technology
MOX	mixed oxide (fuel)
NSNFP	National Spent Nuclear Fuel Program
ORR	Oak Ridge Research
PWR	pressurized water reactor
SDC	standard disposal canister
SNF	spent nuclear fuel

TBD	to be determined
TMI	Three Mile Island Unit 2
TRIGA	Training Research Isotopes General Atomics
U	total uranium
X	fissile species (^{233}U, ^{235}U, ^{239}Pu)

NOMENCLATURE

Atom-density	A measure of the fissile atom concentration used in Monte Carlo N-Particle modeling, usually expressed in atoms/barn-cm.
Axial reconfiguration	A condition that would assume preferential migration of fissile material to a zone that results in an abnormal increase in concentration. Such a condition could occur if the canister were turned on end and if degraded materials were collected in one end of the canister.
Basket	Device to facilitate spent nuclear fuel loading in a canister, enforce predictable geometry inside the spent nuclear fuel canister, and provide a means of incorporating neutron absorber material if necessary. The basket may be segmented to allow stacking.
Benchmarks	A measured set of specific conditions used to establish fissile concentrations (or atom-densities) needed to actually achieve criticality.
Boron	^{10}B cross-section of 3,840 barns but has a natural isotopic occurrence of only 19.9%.
Burnup	A measure of the percentage of atoms consumed from a known mass of heavy metal.
Canister	A sealed container used for spent nuclear fuel disposal packaging. *(a.k.a. SNF canister or SDC)*
Codisposal	The concept of combining both DOE spent nuclear fuel and high-level waste in a single waste disposal package.
Critical limit	Defines the maximum allowable k_{eff} for a single canister configuration ([k_{eff} <0.93 for highly enriched uranium] or [k_{eff} <0.97 for low-enriched uranium]).
Criticality	The chain reaction where the number of neutrons produced in a given generation equals the number lost by fission, absorption, or leakage.
Depleted uranium	Uranium that has had as much as 50% of its original fissile concentration of ^{235}U extracted during enrichment operations.
Effective enrichment	$\sum \frac{\text{U233} + \text{U235} + \text{Pu239} - 241}{\text{Total U} + \text{Total Pu}} \times 100.$
Epithermal neutrons	Neutrons with energies greater than thermal up to 10 keV.
EQ3/6	Computer software code used to calculate chemical equilibrium for degradation scenarios.
Fuel handling unit	Refers to an individual piece of spent nuclear fuel, whether a rod, plate, can, pin, or assembly.

Gadolinium	Two predominant isotope species for neutron capture (Gd-155/61,000 barns thermal; 1540 barns resonance [14.8% abundance] and Gd-157/255,000 barns thermal; 800 barns resonance [15.7% abundance]).
Insert	May be used inside a spent nuclear fuel canister in lieu of a basket. Inserts will be continuous for the inside length of the canister.
k_{eff}	Effective multiplication factor that expresses the ratio of the number of neutrons resulting from fission in each generation to the total number lost by both absorption and leakage in the preceding generation.
Linear loading	Concept of fissile material distribution in horizontally oriented packages.
Metric tonnes heavy metal	Defined as the sum of the masses for all thorium, uranium, and plutonium and reported in metric tonnes.
Multi-canister overpack	A standardized canister for packaging DOE spent nuclear fuel (used exclusively at the Hanford site).
Natural uranium	Contains 0.7205 atom% ^{235}U; the usable fissile material.
Neutron absorber	Material with a high capture cross section for neutrons.
Poison	Neutron absorbers that are installed inside the spent nuclear fuel canister in various forms.
Radial reconfiguration	A degraded fuel condition that addresses both expansion and contraction of the fissile materials about the centerline of a horizontally oriented spent nuclear fuel canister; made with the assumption of a uniform linear loading.
Spent nuclear fuel canister (or standard disposal canister)	An engineered container that houses and seals spent nuclear fuel against radionuclide leakage out/water moderation in.
System reactivity	As measured by the calculated k_{eff}.
Thermal neutrons	Average or monoenergetic neutrons of 0.0253 electron volts.
Void volume	The calculated empty volume inside a spent nuclear fuel canister after accounting for displacement caused by the basket and fuel material.

Packaging Strategies for Criticality Safety for "Other" DOE Fuels in a Repository

1. PURPOSE

Packaging these "other" fuels is based on the analyses done to date on nine specific fuel types that were intended to envelop anticipated worst-case conditions in a postclosure repository. The outgrowth of such an analysis is a set of criticality calculations suitable for preliminary screening for criticality risk in single canister preclosure scenarios. None of the analyses done to date attempt to answer the criticality safety questions related to close-packed array packaging in transport casks or prove safety in any interim storage array.

This report identifies how the other fuels might use basket designs developed out of the analyses performed for the nine fuel groups. This report also identifies (in Appendix A) how these other fuels could be bounded by the baseline fuels.

1.1 Quality Assurance

This document was developed and is controlled in accordance with National Spent Nuclear Fuel Program (NSNFP) procedures. Unless noted otherwise, information must be evaluated for adequacy relative to its specific use if relied on to support design or decisions important to safety or waste isolation.

The NSNFP procedures applied to this activity implement DOE/RW-0333P, *Quality Assurance Requirements and Description*, and are part of the NSNFP Quality Assurance Program. The NSNFP Quality Assurance Program has been assessed and accepted by representatives of the Office of Quality Assurance with the Office of Civilian Radioactive Waste Management for the work scope of the NSNFP. The NSNFP work scope extends to the work represented in this report.

The principal NSNFP procedures applied to this activity included the following:

- NSNFP Program Management Procedure (PMP) 6.01, "Review and Approval of NSNFP Internal Documents"
- NSNFP PMP 6.03, "Managing Document Control and Distribution"
- NSNFP Program Support Organization (PSO) 3.04, "Engineering Documentation."

1.2 Strategy

The goal of packaging U.S. Department of Energy (DOE) spent nuclear fuel (SNF) has been to minimize the ultimate number of SNF canisters generated for repository disposal. Conversely, this goal is achieved only through maximizing the fissile quantities that can be loaded in any canister that is consistent with an ability to ensure an acceptable criticality risk for the licensing basis of the repository (10,000 years) and preferably beyond.

The criticality analyses done to date for DOE fuels have followed a set of criteria established in a Disposal Criticality Analysis Methodology Topical Report[1] and for the same regulatory bases. While this methodology report focuses specifically on commercial fuel, the criteria are specifically applicable to DOE SNF: "The methodology approach outlined... will be used for the following waste forms:

commercial SNF, DOE SNF, and... with the exception of the determination of isotopic inventories and burnup credit which is inappropriate for DOE SNF..." DOE fuel in general has never sought burnup credits. Indeed, where DOE fuel had a known potential for ingrowth of fissile isotopes, added conservatisms for fissile loadings in certain fuels were incorporated into those criticality analyses.

The strategy for DOE SNF has been to analyze a select number of fuels with their associated parameters (fissile mass, enrichment, fissile isotope, linear loading per canister, and hydrogen/fissile [H/X] ratio) as a baseline set of conditions for single canisters. These packages were then analyzed under all conceivable conditions, e.g., dry/intact, fully flooded/intact, flooded/fuel degraded, flooded/basket degraded, and flooded/all degraded. The results of each analysis were used to identify any poisoning requirements that are based on the most reactive configuration identified.

Ultimately, those parameters associated with criticality risk for the other fuel packaging need to demonstrate that the values are some percentage of the baseline fuel such that decreased reactivity can be demonstrated for intact fuels/intact basket relative to baseline fuel. These are necessary calculations for all DOE fuel at the time of packaging, because any movement of fuel into a new configuration must be analyzed for criticality risk. The assumption has always been analyzing single canisters of fuel, because neutronic isolation from other canisters is considered the province of the packaging/storage facility and the designer of the transport cask.

A major premise of the nine, detailed analyses has focused on the postclosure conditions expected for any packaged DOE-owned SNF. To achieve this goal, a representative fuel was selected from each of nine distinct fuel groups as representative of an expected packaging scheme that would encompass all the parameters important to criticality risk. This effort would then identify through analysis a most reactive package configuration. All criticality analyses started with a conceptual, intact fuel-configuration within a canister (whether with or without a basket and/or poisons), and a horizontal canister orientation. Sequential and progressive degradation of canister contents because of the entry of water into a breached canister examined each proposed canister load for intact, fully flooded conditions. Subsequent degradation scenarios examined degraded fuel/intact baskets, degraded baskets/intact fuels, and degradation of all components within both the waste package and the SNF canister. Of the failure modes analyzed, it was generally the degradation and redistribution of the fissile mass within the SNF canister that promoted the need to add neutron poisoning in certain packages. There is an inherent assumption (analyzed with chemical equilibrium via EQ3/6) that addresses the form and retention of any poisons installed in any canister.

The fact that the baseline analysis looks at intact configurations, both dry and through all degrees of moderation, suggests there is a bounding case analysis at least for a single canister for any preclosure event (packaging, storage, transportation). None of the postclosure analyses have addressed a vertical orientation and degraded fuel conditions. The nine analyses purposefully steered away from vertical orientation with axial fuel reconfiguration, because with the addition of water moderation, maintaining the calculated k_{eff} below the critical limit could not be ensured. In postclosure, while moderator exclusion might not be absolutely ensured, once the waste package is placed in a repository drift, there are no identified mechanisms to promote axial reconfiguration of fissile material within an SNF canister.

Still, many of the calculated values for any SNF packaging scheme will need to be determined for individual packages at the time of loading. The approach of this document will be the identification of baseline values of parameters, the control of which is instrumental in satisfying criticality limits. If it can be shown that the calculated k_{eff} is lower than the comparable baseline fuel configuration (intact, both dry and flooded), that fissile atom-densities for a homogeneous package loading are less than those already established by the baseline fuel, and that H/X ratios do not favor increased reactivities, then no additional degradation analyses would be needed to promote acceptance of the canister and its contents into the

repository. This approach is depicted in Figures 1a and 1b. The figures depict a process used for an initial determination of which canister/basket configuration might be suitable for the various fuels.

Individual criticality models analyzed at the time of SNF canister loading for both dry and wet configurations could provide the starting point for criticality analysis of a close-packed array within the transport cask. The strategy to date has been toward maximizing fissile loading with any given SNF canister in an attempt to minimize the total SNF canister count. Analysis of baseline fuels has always been predicated on an ability to demonstrate acceptable criticality risk for any single canister loading under any conceivable condition. Packaging any SNF canister for interim storage or transport relied generally on an ability to ensure intact fuel/basket configurations already proven to be critically safe during the single package analyses. However, both storage and transport of these canisters could be expected to have to deal with arrays of canisters under a yet-to-be prescribed set of conditions, e.g., how close the packages are to one another or what degree of moderator exclusion can be ensured in both the transport cask and individual canisters. For these cases engineered barriers and administrative controls, for which verification and remediation are possible, were expected to provide the contingencies necessary to ensure criticality safety during transport.

The strategy of using neutron poisons within any loaded canister is driven by the postclosure conditions, given an inability to ensure moderator exclusion and degradation of the SNF canister contents over time. The quantity of poisons used is determined by calculations relative to predicted solubility of the poison for a wide range of chemical conditions postulated for a breached waste package.

^{238}U as a neutron capture agent plays an important role in criticality analyses for low-enriched uranium (LEU) fuel systems and explains why so much more total fissile is needed to achieve criticality.

Criticality analyses have been performed for the nine types of fuels in the criticality grouping, along with a limited number of incidental analyses for other fuels within a standard canister configuration. The bibliography near the end of this report lists all the associated criticality analyses done for DOE SNF. Table 1 provides a summary breakdown of what portion of the DOE fuel inventory can be tied directly to an existing analysis in support of evaluating the criticality risk of a single canister in a codisposal waste package (source for MTHM and volumes: SNF Database Version 5.0.1). Ideally, future analyses for the other unanalyzed fuels can be limited to analyses of only intact fuel configurations inside a standard canister by demonstrating how the baseline values important to criticality bound the other fuels.

Table 2 provides a summary of those variables calculated in Appendix A that are fixed by the physical nature of the loaded, baseline canisters. The H/X ratio is more variable depending on the assumption of percentage of void space within the canister as it might be filled with water.

TRIGA-FLIP fuel (70% enrichment) analysis used 12 poisoned tubes (out of 37) in each basket. Practical design consideration should poison all basket tubes to avoid any question of whether the poisoned tubes were even installed or if they were installed in the correct position. TRIGA standard fuel loaded in the same canister/basket configuration represent some 28.5% of fissile material associated with a TRIGA-FLIP fuel loading. The same basket-poisoning scheme should be implemented for these standard fuels in case an inadvertent fuel loading installs a TRIGA-FLIP fuel by mistake. Ideally, it would make sense to mix FLIP and standard fuels in the same package, thereby providing a derated fissile loading for all TRIGA fuel canisters. The current split between TRIGA fuels would yield 7 TRIGA-FLIP canisters versus 62 TRIGA-standard or FFCR (fueled follower control rod) canisters.

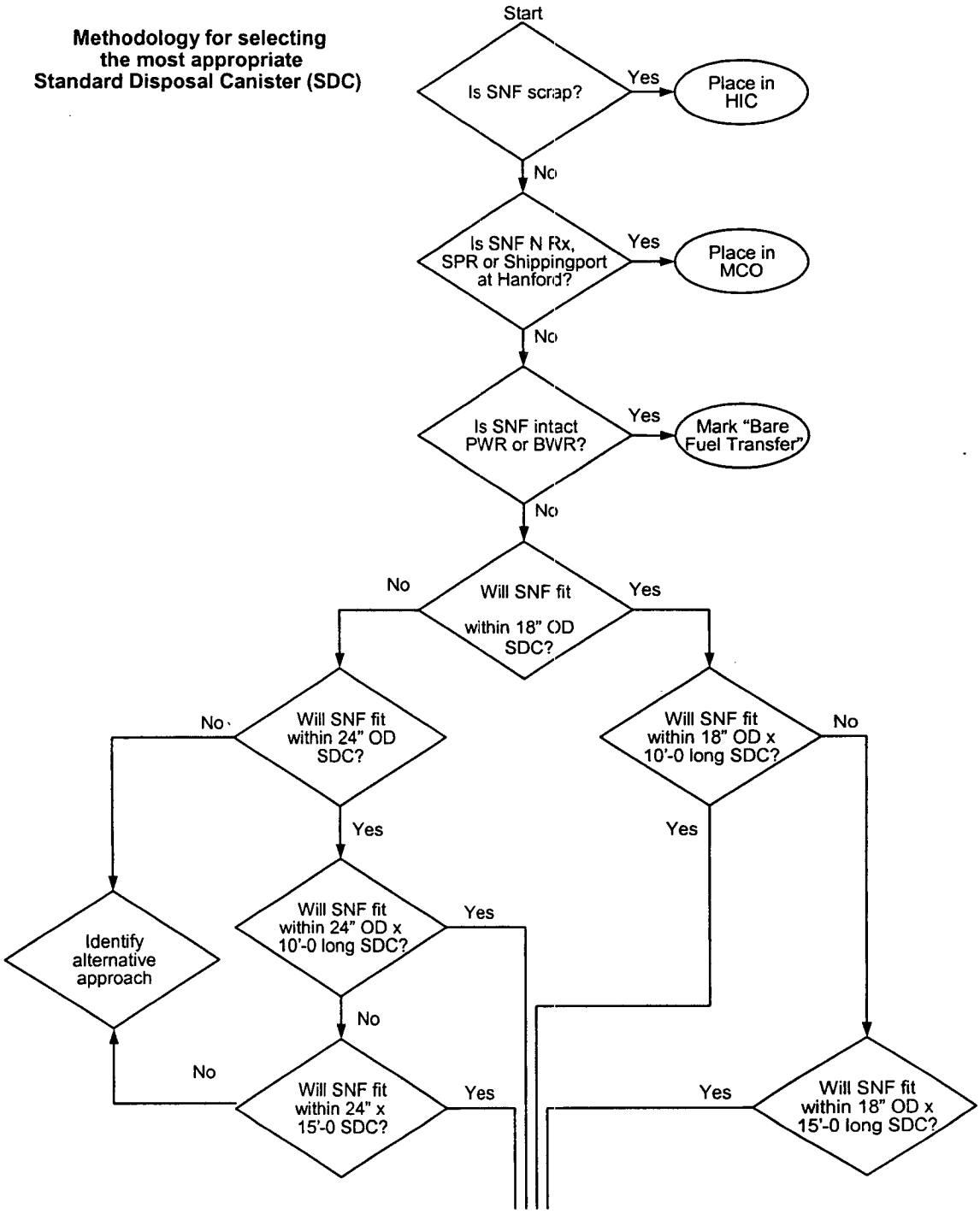

(continued on Figure 1b)

Figure 1a. Methodology for selecting standard disposal canisters.

(continued from Figure 1a)

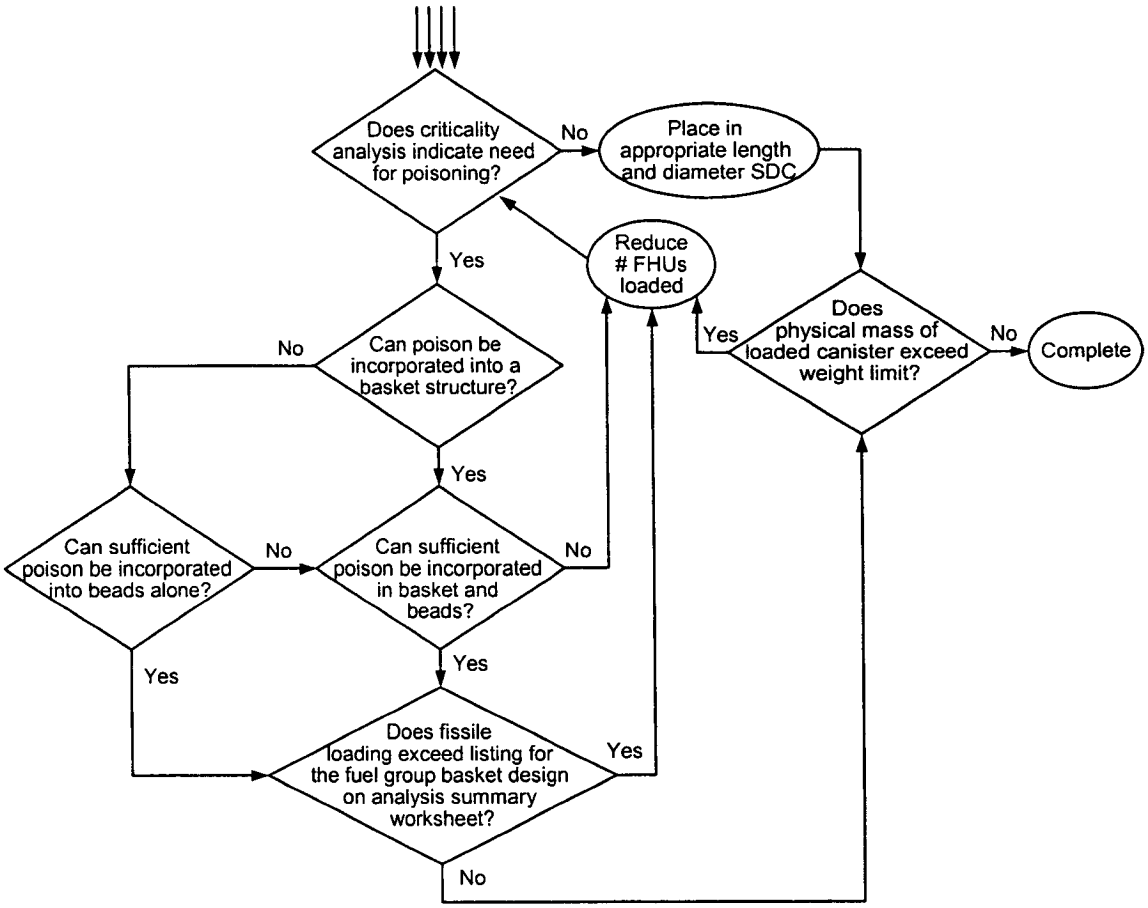

Figure 1b. Methodology for selecting standard disposal canisters.

Table 1. DOE spent nuclear fuel quantities.

Fuel Group	Analyzed[a]		Nonanalyzed[b]	
	MTHM	Vol (m^3)	MTHM	Vol (m^3)
1—Aluminum				
ATR	5.067	62.976	—	—
MIT	0.231	1.421	—	—
ORR	0.147	0.454	—	—
Other	—	—	11.937	84.368
Subtotal	5.445	64.851	11.937	84.368
% of subtotals	31.3%	43.5%	68.7%	56.5%
2—Uranium metal				
N-reactor	2096.202	204.25	—	—
Other	—	—	14.124	3.073
Subtotal	2096.202	204.25	14.124	3.073
% of subtotals	99.3%	98.5%	0.7%	1.5%
3—Mixed oxides				
FFTF	10.791	16.782	—	—
Other	—	—	1.56155	2.022
Subtotal	10.791	16.782	1.56155	2.022
% of subtotals	87.4%	89.2%	12.6%	10.8%
4—UZr-UMo				
Fermi	3.912	0.313	—	—
Other	—	—	0.666	1.482
Subtotal	3.912	0.313	0.666	1.482
% of subtotals	85.5%	17.4%	14.5%	82.6%
5—UZrHx				
TRIGA	1.9199	7.234	—	—
Other	—	—	0.033	0.078
Subtotal	1.9199	1.9199	0.033	0.078
% of subtotals	98.3%	96.1%	1.7%	3.9%
6—Highly enriched uranium oxide				
Shippingport PWR	0.5216	3.657	—	—
HFIR (outer)	2.9621	58.576	—	—
HFIR (inner)	—	—	1.0546	26.582
Other	—	—	4.9984	35.845
Subtotal	3.4837	62.233	6.0530	62.427
% of subtotals	36.53%	49.9%	63.47%	50.1%

Table 1. (continued).

Fuel Group	Analyzed[a]		Nonanalyzed[b]	
	MTHM	Vol (m^3)	MTHM	Vol (m^3)
7—U-Th oxide				
Shippingport LWBR	21.898	8.516	—	—
Other	—	—	28.293	16.605
Subtotal	21.898	8.516	28.293	16.605
% of subtotals	43.6%	33.9%	56.4%	66.1%
8—U-Th carbide				
Ft. St. Vrain	23.3521	196.468	—	—
Peach Bottom	2.9441	34.823	—	—
Other	—	—	0.09487	0.005
Subtotal	26.2962	231.291	0.09487	0.005
% of subtotals	99.6%	100.0%	0.4%	0.0%
9—Low-enriched uranium oxide				
TMI	81.768	129.571	—	—
Other	—	—	91.269	68.268
Subtotal	81.768	129.571	91.269	68.268
% of subtotals	47.3%	65.5%	52.7%	34.5%

ATR—Advanced Test Reactor
FFTF—Fast Flux Test Facility
HFIR—High Flux Isotope Reactor
LWBR—Light Water Breeder Reactor
MIT—Massachusetts Institute of Technology
ORR—Oak Ridge Research
PWR—Pressurized Water Reactor
TMI—Three Mile Island
TRIGA—Training Research Isotopes General Atomics

a. Quantities supported by a criticality analysis in a standard fuel canister.

b. Quantities not specifically supported with a criticality analysis in standard fuel canister.

Table 2. DOE spent nuclear fuel Appendix A summary.

Type Basket	Baseline Fuel	Fissile Mass (kg); Length (ft) (per canister)	Fissile Linear Loading (g/cm)	Canister Fissile Atom-Density (atom/b-cm)	Neutron Absorber (kg Gd)
1a	ATR	21.7 ; 10-ft	84.6	1.438E-04	7.21
2	N-reactor (Mark 1A)	36.763 ; ~12-ft (MCO)	103.11	9.87E-05	None
3	FFTF	48.61 (^{239}Pu) ; 15-ft	117.41	1.995E-04	9.29[a]
4	Fermi	113.2 ; 10-ft	441.326	7.499E-04	9.04
5	TRIGA-FLIP	15.20 ; 10-ft	59.250	2.806E-04	8.9
6	Shippingport PWR	18.174 ; 15-ft	43.896	7.459E-05	None
6a	TMI-2	13.72 ; 15-ft	33.138	5.631E-05	None
6b	HFIR (outer)	15.532 ; 10-ft	62.236	5.949E-05	TBD
6c	Shippingport LWBR (seed)	16.85 ; 15-ft	40.6985	6.916E-05	5.03
7	Misc.	TBD ; 10-ft (anticipated)	TBD	TBD	TBD

a. Initial criticality analyses determined this amount[2]; subsequent analyses examined a more reactive IDENT configuration within a standard canister.[3]

1.2.1 Horizontal Versus Vertical Orientation of an SNF Canister

The nature of the fuel in terms of composition and structure in many ways influences both the strategy of loading the fuel in a canister and the basket concept. The initial analysis of any loaded canister has always portrayed the intact fuel in a horizontal orientation within the intact basket/canister combination. In reality, very little movement of fuel within the canister would result from vertical orientation such as occurs during interim canister movements between storage positions or placement in a waste package. Whether dry or wet, the loaded (individual) canister presents no criticality risk in any orientation as long as both fuel and basket geometries are maintained within the canister.

1.2.2 Radial Versus Axial Reconfiguration of Fissile Materials

Subsequent analysis of any loaded canister in degraded cases has always been postulated on a horizontal orientation of the canister within the waste package. Such an orientation allowed the analyst to preclude any axial concentration mechanism of fissile mass within the canister once emplaced in the repository. However, such analyses for degraded cases could not preclude radial redistribution of fissile material within the degraded canister. Fuels within the canister are already distributed radially. Experience would suggest gravity would prevail toward settlement of degraded materials toward the bottom of a breached canister with degraded internals. However, unknowns with respect to behavior of pins or solutions within a breached SNF canister could not preclude a radial expansion of fissile material outward, which in most analyzed cases proved to promote a more reactive system.

1.3 Heavy Metals

Heavy metals are defined as the total mass of thorium (Th) + uranium (U) + plutonium (Pu). Within the DOE SNF inventories, there are ranges, compositions, and mixtures of all the above. Certainly the N-reactor fuel inventory of nearly 2,100 MTHM of the ~2,500 MTHM for all DOE SNF dominates the heavy metal contribution intended for the repository. Yet the relatively low enrichment (<1.25%) of the N-reactor fuel poses no criticality risk with the adopted approach of codisposal using two multi-canister overpacks (MCOs) and two high-level waste (HLW) canisters in a waste package.

The balance of DOE fuel by its very nature as test or experimental fuel tends to be generally highly enriched. These fuels, in terms of physical size, enrichment, and total fissile mass, suggested the approach for proposing basket configurations, canister size selection, and fissile loads per canister.

By definition, highly enriched uranium (HEU) contains uranium with >20% enrichment in the fissile species. In the case of mixed oxide (MOX) fuel, this translates to the percent of fissile ^{239}Pu mixed in with either depleted or natural uranium. Such a blending of heavy metals leads to the development of effective enrichment reported in the SNF database.

Medium-enriched uranium (MEU) is listed as a fuel matrix material containing fissile uranium (^{233}U or ^{235}U) >5% and <20%. Very few fuels exist in the 5–15% range of enrichment within the DOE SNF inventory. The MEU fuels at the 20% enriched boundary can conveniently be lumped with the HEU fuels for modeling purposes.

Both MEU and HEU experience the most reactive system configuration when modeled as a fully moderated, homogeneous distribution within any SNF canister. Conversely, the LEU fuels yield their most reactive condition when modeled as heterogeneous pellets.[4,5]

LEU encompasses all fuels with fissile enrichments of <5%. This group constitutes both N-reactor and commercial fuels. Intact commercial fuels that remain intact fall into a group of fuels that

will be shipped "bare" to the repository for the conventional disposal path followed by other commercial fuels.

One other fissile species found in the DOE SNF inventory involves ^{233}U. This isotope of uranium is generally associated with thorium-based fuels (Ft. St. Vrain and Shippingport Light-Water Breeder Reactor [LWBR]), which is the fertile material used to produce ^{233}U.

Whether ^{239}Pu is associated with depleted uranium or ^{233}U is associated with ^{232}Th, the nature of both isotopes as fertile materials also allows the models to take credit as a parasitic neutron capture agent when geochemical calculations (EQ3/6) associated with the degraded conditions show retention within the system.

1.4 Moderator/Uranium Ratio

There exists for each proposed SNF canister a calculable void fraction based on displacement caused by metal baskets and metals and other inert materials associated with the fuels themselves. This displaced volume is based on intact fuel/basket configurations. Degradation scenarios and products generally tend to displace moderator that might otherwise be available within any breached SNF canister.

Within a loaded canister, the void space represents the theoretical amount of water that can be present in a canister. This calculation is done for the intact case, because most degradation products of the fuels and baskets expand and thereby exclude moderator. Therefore, the intact case contributes to the highest calculated mass of moderator. This relationship can be expressed by the following equation:

$$Vol_{H2O} = Vol_{can} - Vol_{bskt} - (Vol_{fuel} - Void_{fuel})$$

where

Vol_{H2O}	=	Void volume capable of water fill
Vol_{can}	=	Volume inside canister
Vol_{bskt}	=	Displacement volume of basket material
Vol_{fuel}	=	Displacement volume of fuel assembly envelope
$Void_{fuel}$	=	Void volume within fuel assembly.

1.4.1 Hydrogen/Uranium Ratios

While typical calculations might refer to a hydrogen/uranium ratio, this would be a more meaningful relationship for the LEU materials. In the case of many of the DOE fuels, the more highly enriched fuels have little ^{238}U to impact the criticality calculations. Under those circumstances, it becomes more meaningful to express the hydrogen/fissile ratio or H/X.

Void space left over inside the canister after insertion of any basket, fuel, or moderator exclusion material provides space for the potential accumulation of water in a flooded package. Within the constraints of the standard canister, there will always be a calculable void volume and therefore a physical mass of water (grams of hydrogen) that can influence system reactivity by how close the system is to optimum moderation. This is an intertwined variable such that for a given "closed" system, decreasing fissile mass (X) increases hydrogen (H); and this results in an altered H/X. The questions then become:

(1) in which direction is the canister moving from an undermoderated or an overmoderated condition? and (2) if the removal of fissile mass (lower atom-density) leads to a more optimally moderated condition, does the fissile mass loss offset to actually promote a lower system reactivity?

In this report, a global H/X ratio for each canister is based on calculated void volume within any loaded standard disposal canister (SDC). This calculation uses the calculated void volume of the usable space within the canister minus the displaced space occupied by any basket minus the displaced volume of the fuel after adjustment for some assumed void fraction of the fuel handling unit (FHU). This global ratio reflects a somewhat theoretical and uniform homogenization of the uranium throughout the canister. This assumption may not necessarily reflect either a lesser degree of degradation or a most reactive configuration, but it will provide an indication of how close such a system might be to an optimally moderated condition. Alternative H/X ratios might warrant further examination relative to the sensitivity of a canister basket by calculating a different H/X ratio for a canister compartment. Fissile redistribution inside a basket compartment that contains a hybrid fuel loading might actually increase the H/X ratio on a very localized basis. This could occur with a fuel shape that may contain less fissile material than the baseline fuel, but exhibit a higher fissile load per unit volume for that individual piece of fuel.

It is instructive to point out that many of the calculated H/X ratios associated with the various packaging strategies range between 200 and 2,000. The H/X atom ratio for an optimally moderated HEU sphere appears to be around 520 (see Reference 4 and Table 3) as portrayed by the characteristic S-curve shown in Figure 2. The use of this figure should be considered to be illustrative of the concept of minimal fissile mass associated with optimal moderation. The figure is in no way predictive of fissile mass limits to be imposed on SNF canisters given the physical geometries, expected properties of the canister internals, and the degradation materials.

Comparison of this calculated ratio for the other fuel is not intended to generate a licensing basis for any fuel package. Rather, it merely provides a reasonable comparison of any proposed canister/basket/fuel load combination against the baseline fuel for that canister/basket combination.

1.4.2 Comparative H/X Ratios

Calculated H/X ratios are determined for each canister based on the calculated void volume between the impact plates minus the displaced volume of the intact fuels and the intact baskets. This constitutes a somewhat theoretical evaluation as it maximizes the moderator content; degradation species generally tend to displace water through formation of oxides such as goethite (FeOOH). It also makes a simplifying assumption of 2% void space in solid fuels and a 50% void space for plate or pin-type fuels. The calculated ratio is intended to provide a relative measure of how close or far away from optimum moderation a loaded canister might be based on an assumed homogenization of fissile and moderator completely filling the breached canister.

Calculated H/X ratios for homogeneous distribution of uranium within an SNF canister result in equivalent uranium concentrations far in excess of the limit of uranium solubility in groundwater. Earlier studies[6] of uranium solubility in J-13 groundwater used EQ3/6 calculations to provide a calculated solubility of –4.5 (log) (M), which equates to a value of 3.16 E-05 M, or ~7.5E-03 g/L. Even the aggressive acid conditions associated with reprocessing fuel elements for uranium recovery yielded concentrations only in the range of 1.0-2.0 g/L. Calculated plutonium solubilities (see Reference 6) reveal a two order-of-magnitude decrease [-7.0 (log) (M)] over uranium values.

Obtaining a homogenous distribution of HEU within most canisters is a physical impossibility. However, calculation of the homogeneous H/X ratio offers a relative comparison whether the system is or can be optimally moderated at some point in filling a breached canister with water. For a fuel that has a

Table 3. Calculated H/X ratios.[a]

Hydrogen at. wt. =	1.00794
Oxygen at. wt. =	15.9994
U-235 at. wt. =	235.049323
Avogadro's. #:	6.02214E+23
Basis: 1 liter = 1000 cm3	
Water density = 1.0 g/cc	

Density of U-235 (g/cm^3) or (kg/L)	U-235 (kg)	U-235 (g)	U-235 (g-moles)	U-235 (atoms)	U Volume (L)	H_20 Volume (L)	H_20 (g)	Hydrogen (g)	Hydrogen (g-moles)	Hydrogen (atoms)	H/X Atom Ratio	Notes
17.484	17.484	17484	74.38439	4.47953E+25	1.00000	0.00000	0	0	0	0	0	<-- metal (93.2); Reference 4
10	10	10000	42.54426	2.56207E+25	0.57195	0.42805	428.049	47.898	47.521	2.86176E+25	1.1	Reference 4
7	7	7000	29.78098	1.79345E+25	0.40037	0.59963	599.634	67.098	66.569	4.00891E+25	2.2	Reference 4
5	5	5000	21.27213	1.28104E+25	0.28598	0.71402	714.024	79.898	79.269	4.77367E+25	3.7	Reference 4
3	3	3000	12.76328	7.68622E+24	0.17159	0.82841	828.415	92.698	91.96799	5.53844E+25	7.2	Reference 4
2	2	2000	8.50885	5.12415E+24	0.11439	0.88561	885.610	99.098	98.318	5.92082E+25	11.6	Reference 4
1	1	1000	4.25443	2.56207E+24	0.05720	0.94280	942.805	105.498	104.6672	6.30320E+25	24.6	Reference 4
0.7	0.7	700	2.97810	1.79345E+24	0.04004	0.95996	959.963	107.418	106.5721	6.41792E+25	35.8	Reference 4
0.5	0.5	500	2.12721	1.28104E+24	0.02860	0.97140	971.402	108.698	107.8421	6.49440E+25	50.7	Reference 4
0.3	0.3	300	1.27633	7.68622E+23	0.01716	0.98284	982.841	109.978	109.112	6.57087E+25	85.5	Reference 4
0.2	0.2	200	0.85089	5.12415E+23	0.01144	0.98856	988.561	110.618	109.7469	6.60911E+25	129.0	Reference 4
0.1295	*0.1295*	*129.50*	*0.55097*	*3.31800E+23*	*0.00741*	*0.99259*	*992.593*	*111.070*	*110.1946*	*6.63607E+25*	*200*	*interpolated*
0.1	0.1	100	0.42544	2.56207E+23	0.00572	0.99428	994.280	111.258	110.3819	6.64735E+25	259.5	Reference 4
0.0865	*0.0865*	*86.45*	*0.36781*	*2.21500E+23*	*0.00494*	*0.99506*	*995.055*	*111.345*	*110.4679*	*6.65253E+25*	*300.3*	*interpolated*
0.0742	*0.0742*	*74.16*	*0.31550*	*1.90000E+23*	*0.00424*	*0.99576*	*995.758*	*111.424*	*110.546*	*6.65723E+25*	*350.4*	*interpolated*
0.07	0.07	70	0.29781	1.79345E+23	0.00400	0.99600	995.996	111.450	110.5724	6.65882E+25	371.3	Reference 4
0.0650	*0.0650*	*64.986*	*0.27648*	*1.66500E+23*	*0.00372*	*0.99628*	*996.283*	*111.482*	*110.6042*	*6.66074E+25*	*400.0*	*interpolated*
0.0578	*0.0578*	*57.766*	*0.24576*	*1.48000E+23*	*0.00330*	*0.99670*	*996.696*	*111.529*	*110.650*	*6.66350E+25*	*450.2*	*interpolated*
0.0548	*0.0548*	*54.760*	*0.23297*	*1.40300E+23*	*0.00313*	*0.99687*	*996.868*	*111.548*	*110.6692*	*6.66465E+25*	*475.0*	*interpolated*
0.0520	*0.0520*	*52.028*	*0.22135*	*1.33300E+23*	*0.00298*	*0.99702*	*997.024*	*111.565*	*110.6865*	*6.66569E+25*	*500.1*	*interpolated*
0.05	0.05	50	0.21272	1.28104E+23	0.00286	0.99714	997.140	111.578	110.6994	6.66647E+25	520.4	<-- optimum ?; Reference 4
0.0495	*0.0495*	*49.530*	*0.21072*	*1.26900E+23*	*0.00283*	*0.99717*	*997.167*	*111.581*	*110.7024*	*6.66665E+25*	*525.3*	*interpolated*
0.0473	*0.0473*	*47.305*	*0.20126*	*1.21200E+23*	*0.00271*	*0.99729*	*997.294*	*111.596*	*110.7165*	*6.66750E+25*	*550.1*	*interpolated*
0.0434	*0.0434*	*43.363*	*0.18449*	*1.11100E+23*	*0.00248*	*0.99752*	*997.520*	*111.621*	*110.7415*	*6.66901E+25*	*600.3*	*interpolated*
0.0400	*0.0400*	*40.042*	*0.17035*	*1.02590E+23*	*0.00229*	*0.99771*	*997.710*	*111.642*	*110.7626*	*6.67028E+25*	*650.2*	*interpolated*
0.0372	*0.0372*	*37.185*	*0.15820*	*9.52700E+22*	*0.00213*	*0.99787*	*997.873*	*111.660*	*110.7808*	*6.67137E+25*	*700.3*	*interpolated*
0.0325	*0.0325*	*32.54395*	*0.13846*	*8.33800E+22*	*0.00186*	*0.99814*	*998.139*	*111.690*	*110.810*	*6.67314E+25*	*800.3*	*interpolated*
0.03	0.03	30	0.12763	7.68622E+22	0.00172	0.99828	998.284	111.706	110.8264	6.67412E+25	868.3	Reference 4
0.0260	*0.0260*	*26.04531*	*0.11081*	*6.67300E+22*	*0.00149*	*0.99851*	*998.510*	*111.732*	*110.8515*	*6.67563E+25*	*1000.4*	*interpolated*
0.02	0.02	20	0.08509	5.12415E+22	0.00114	0.99886	998.856	111.770	110.890	6.67794E+25	1303.2	Reference 4
0.0121	0.0121	12.14	0.05165	3.11036E+22	0.00069	0.99931	999.306	111.821	110.940	6.68095E+25	2148.0	<-- limiting critical density; Reference 4
0.01	0.01	10	0.04254	2.56207E+22	0.00057	0.99943	999.428	111.834	110.9534	6.68176E+25	2608.0	Reference 4
0.0070	0.0070	7	0.02978	1.79345E+22	0.00040	0.99960	999.600	111.854	110.9724	6.68291E+25	3726.3	Reference 4
0.0050	0.0050	5	0.02127	1.28104E+22	0.00029	0.99971	999.714	111.866	110.9851	6.68368E+25	5217.4	Reference 4

a. Italics denotes interpolated values.

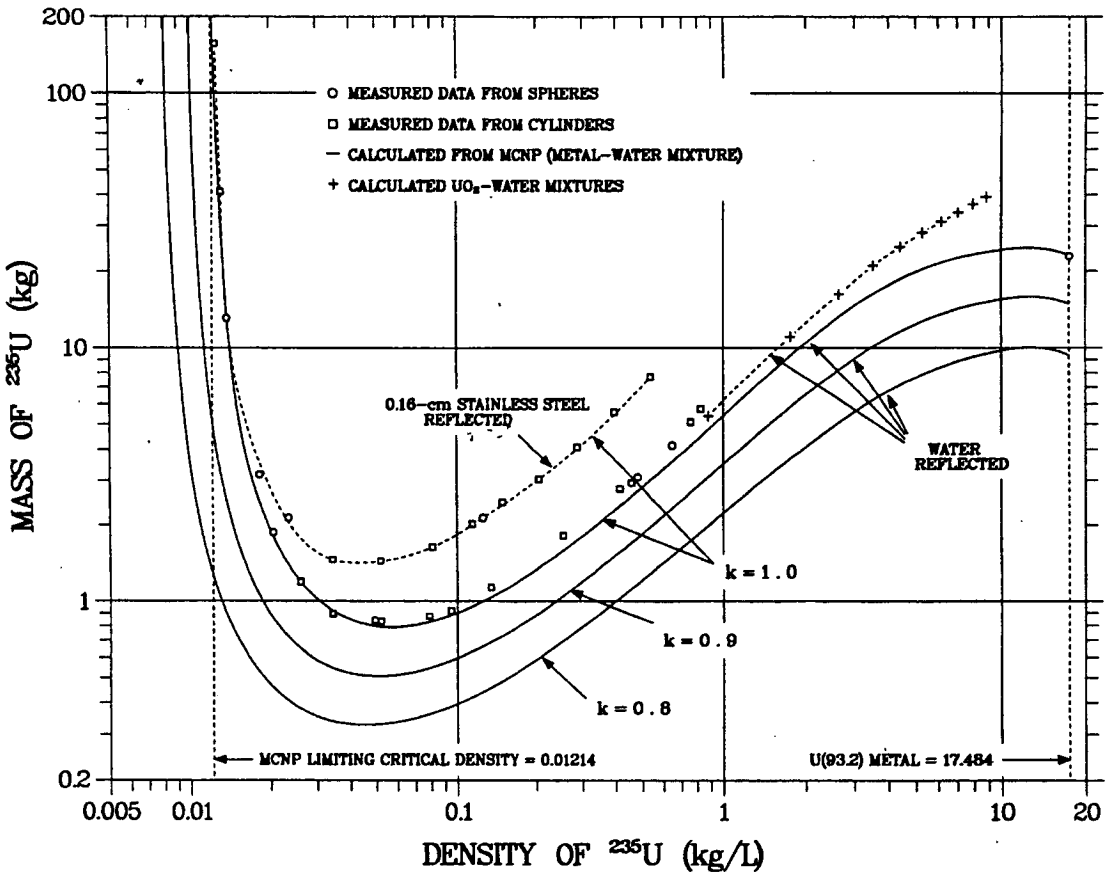

Figure 2. Masses of spheres of homogeneous water-moderated U(93.2) as functions of ^{235}U density.

calculated H/X ratio that is undermoderated in a completely filled canister, it will always be undermoderated through all degrees of filling. Conversely, a canister that is significantly overmoderated when filled would have to go through the optimally moderated (minimum fissile) inflection point (see Figure 2) (see Reference 4). However, not all the fissile material would experience full moderation. So, calculated minimum fissile masses would be higher. The combination of fissile/moderator mix of greatest concern resides with the cases that reflect near optimal moderation when fully flooded.

Table 3 presents the calculated values for uranium, moderator, and the equivalents for the H/X ratios. This conversion allows the reader to equate the density values shown on the abscissa to their equivalent H/X values. The italicized values represent interpolated values that lie between those taken from specific ordinate values on the graph. The values presented in Figure 2 are for a sphere with optimal moderation and reflection.

Figure 2 is illustrative of the importance attached to any criticality analysis that must deal with the presence of moderator. First and foremost is the portrayal of minimum critical mass. Coupled with the presence of moderator, any analysis provides what this report might reference as the optimally moderated condition. Figure 2 represents an almost idealized configuration with a spherical shape and no other contaminants that might otherwise displace moderator or provide some beneficial parasitic neutron capture. The numeric values presented in Table 3 relate to the density of uranium shown on the X-axis of Figure 2 into the more familiar H/X ratio used in the typical criticality analyses. This conversion was done without any direct comparison to the kilogram values on the Y-axis. The minimum inflection point

chosen for calculating the optimum H/X ratio used the density value of 0.5 associated with the k=1.0 curve.

Unfortunately, analyses of the baseline fuel/basket configurations cannot be reduced to the simplicity shown in Figure 2. Horizontal cylinders represent a different configuration, and there will be a concurrent increase in the minimum fissile mass needed to achieve criticality. In addition, there are inert materials and a variety of enrichments and isotopic species that must be evaluated. It is the criticality analyses for the individual fuel packages that determine what fissile masses can be packaged safely. Certainly one of the goals of any criticality analysis of a DOE SNF canister in a postclosure environment has been to determine the most reactive configuration, and those analyses have always included water. Anything less than an SNF canister completely filled with water (water fraction <1.0) has resulted in a less reactive condition as indicated by calculated k_{eff}s.

Of particular concern is the issue of an approach toward optimal moderation from either an over- or undermoderated condition. In particular, the packaged Fermi fuel with a proposed fissile load of ~114.292 kg ^{235}U is significantly greater than any other loaded SNF canister. The distinction of the Fermi package is that the initial configuration results in an undermoderated condition. The strategy of this fuel packaging is further enforced with the addition of poisoned iron beads for added moderated displacement. In this case, the long-term performance is not so much increasing the H/X ratio through the addition of more moderator (constrained by the physical void volume inside the filled canister), but by increasing the H/X ratio through the loss of fissile material. The issue of optimal moderation and most reactive configuration also supports analysis of collapsing plates/pins/rods inside a canister that promotes a less reactive configuration. Conversely, the void space and low fissile loads that are associated with a fuel canister loaded with Peach Bottom fuel suggests an ability to transition from undermoderated to significantly overmoderated for a fully flooded package.

There are a number of issues to consider when evaluating a different fuel loading in a given basket. There is an identified optimum H/X ratio that can be calculated for any fissile system. Unfortunately, the analysis done to support fuel packaging for the DOE fuel does not necessarily coincide with achieving this optimum ratio, at least for the intact fuel in a fully flooded canister.

Calculating the H/X ratio for the intact fuel can serve as a benchmark for other fuels in a similar configuration (same basket/different fissile load). There are basically two conditions for the fully flooded canister that minimize criticality risk, i.e., significantly undermoderated or highly overmoderated. Examination of a couple of proposed packaging configurations provides an example of these conditions, both of which were evaluated for specific fuels.

The case for the significantly undermoderated fuel is best represented by the proposed packaging for the Fermi fuel. This particular configuration takes advantage of the derodded condition of these 25.3% enriched fuels that are close packed in an individual canister. When installed in twelve cans per layer and two layers deep, the resultant package containing 114.292 kg ^{235}U can be made safe with 9.04 kg gadolinium distributed within the 10-ft canister. Calculations indicate that the gadolinium poison in the tubes is insufficient and that poisoned bead material needs to be added in the interstitial spaces between the basket tubes. The inability to install the necessary gadolinium in the tube alone required use of poisoned beads. Such an approach provides the added poison needed and additional moderator displacement. Calculations indicate that this configuration results in a significantly undermoderated system. A potential problem arises if this packaging concept is used with other fuels with decreased packing density or smaller displaced volume provided by the fuel. Under those circumstances, a decreased fuel volume with equivalent (or higher) fissile enrichment (loading) can promote a more reactive system with all other variables being held relatively constant.

The converse case exists for the TRIGA fuel, which is already near optimum moderation by virtue of the hydride nature of the fuel. In the proposed packaging scheme for this fuel, addition of water into the SNF canister can be shown to (1) provide an overmoderated condition for the fuel based on available void volume and (2) thermalize any available neutrons down where the gadolinium is more effective as a poison.

1.5 Enrichment

One of the practical aspects of criticality analysis for DOE fuels is the wide range of enrichments encountered. Typically, these fuels have been categorized into nine distinct fuel groups. These groupings were selected based on the chemical matrix of the fuel itself rather than on the basis of enrichment or fissile type. Given the range of enrichments (from LEU [<5%] to MEU [>5% to <20%] to HEU [>20%]) that might be found in any category, the baseline fuel selected as representative for that group was one that might be expected to create the most reactive system.

Certainly one of the greater concerns is minimizing criticality risk for the highly enriched fuels. The models for these fuels used a homogeneous distribution of fissile material within the confines of the SNF canister and waste package. At least for the LEU oxide and the U-metal categories, fuels with enrichments <5% dominated the fuels in those groups. So criticality models to address those fuels used a latticing technique to evaluate configurations for the most reactive condition. This approach has been validated in other systems involving the <5% enrichments. Pruvost and Paxton (see Reference 4) address the latticing approach with the following statement: "The maximum ^{235}U enrichment of the uranium at which latticing can reduce the critical mass is estimated to be about 6 wt% ^{235}U. As noted above, the critical mass of uranium below this enrichment can be lower for a heterogeneous system than for homogenous uranium or the same enrichment. Therefore, subcritical limits for a lattice are smaller than for homogeneous uranium of the same enrichment." Such an approach is further reinforced by Lamarsh (see Reference 5): "If the decrease in f is more than offset by the increase in p and ε, the value of k_∞ will clearly be larger for the heterogeneous system. This is the case for natural and for slightly enriched uranium. Thus up to an enrichment of approximately 5% U^{235}, k_∞ is increased by lumping the fuel, while at higher enrichments it is decreased."

1.6 Linear Loading in SNF Canisters

The concept of using linear loading served as a basis for determining how much fissile material could reasonably be loaded within the cross-sectional confines of the SNF canister. Linear loading is a derived term that relates directly to horizontally oriented canisters. Much of the safety predicted for postclosure packages is dependent on an inability to axially reconfigure the fissile mass by tipping a degraded canister on end. Fissile mass can be (and is) varied within the stipulated diameter of the standard canister, but still allows the analysts to assume a relatively uniform (nonconcentrating) quantity of fissile material distributed over the usable length of the canister. While linear loading is not a parameter used in MCNP (Monte Carlo N-Particle) calculations, it does help define the atom-densities expected within the confines of the SNF canister.

The calculation (see Appendix A) of the linear loading for fissile material in the various canisters is based on the fissile mass in the canister divided by the free length between the impact plates (see Table 4). Such a calculation provides one measure for comparing fissile loads on a per canister basis. This value is one and the same for single elements or assemblies in a canister. Where multiple elements are interposed in a basket, the linear loading comparison would be based on the relationship:

(fissile mass/assembly)*(number of assemblies/canister) / (usable length of the canister) = g/cm

Table 4. Empty spent nuclear fuel canister weights.

Canister diameter (in.)	18		24	
Canister length (ft)	10	15	10	15
Nominal O.D., in. (mm)	18 (457)	18 (457)	24 (610)	24 (610)
Minimum I.D. w/sleeve, in. (mm)	16.93 (430.02)	16.93 (430.02)	22.8 (579.12)	22.8 (579.12)
Minimum I.D. wo/sleeve, in. (mm)	17.25 (438.15)	17.25 (438.15)	23 (584.20)	23 (584.20)
Canister outer length, in. (mm)	118.11 (3000)	179.92 (4570)	118.11 (3000)	179.92 (4570)
Canister inner length, in. (mm)	101 (2565)	163 (4140.2)	98.25 (2495.6)	160 (4064.0)
Impact plates (2), lb (kg)	182 (82.5)	182 (82.5)	394 (178.7)	394 (178.7)
Sleeve, lb (kg)	281 (123.4)	455 (206.3)	371 (168.3)	601 (272.6)
Max. total allowable weight, lb (kg)	5005 (2270)	6000 (2721)	8996 (4080)	10000 (4535)
Internal void volume w/sleeve, ft^3 (m^3)	13.03 (0.369)	21.1 (0.598)	22.98 (0.651)	35.87 (1.016)
Internal void volume wo/sleeve, ft^3 (m^3)	13.52 (0.383)	21.91 (0.620)	23.38 (0.662)	38.23 (1.083)

Such a simplification does result in a decreased linear loading where the combination of intact FHUs might leave an unfilled space at the end of the loaded canister. However, it is just one way to normalize the fissile loads on a per canister basis. This assumption of fissile distribution does allow for axial redistribution of fissile material outward from the assemblies, i.e., fissile movement leading to dilution as opposed to fissile movement inward promoting concentration. It is easier to promote arguments of material moving into voids than preferentially moving into space already physically occupied by solid materials.

Concurrently, this information can also be extrapolated into fissile atom-densities within the void space of the canister (neglecting the displaced volume of any nonfissile components), e.g., fuel end fittings, cladding, and basket materials. The use and distribution of the fissile mass throughout the void volume of the canister provides a fissile comparison between canisters regardless of canister or fuel details. This extrapolation can be significant with respect to highly enriched fissile systems because the homogeneity promotes increased reactivities. Such homogenization would result in a fissile concentration in solution that is far beyond the solubility limits of uranium or plutonium in the available water. While consistent with promoting higher calculated k_{eff}s, such configurations are physical impossibilities that can be created in the MCNP model only by positioning solid materials throughout a defined volume that is filled with water.

Each canister configuration can be influenced by degradation properties of the internal contents of both the SNF canister and the codisposal waste package. While these degradation components and properties are accounted for in the baseline fuels analyses, they may vary slightly for other fuel types within a criticality category because of different masses, compositions, or basket designs. Generally, these other materials are either neutral (by absorption cross section) or helpful (by moderator displacement) with regard to their impact in decreasing system reactivity.

1.7 Fuel Construction

Fuel in the DOE SNF inventory originates from a number of different reactors. The characteristic size, shape, and construction were somewhat dependent on the function intended for the reactor and its operating characteristics.

1.7.1 Solid Body Fuel

Solid body fuel is generally associated with reactor power densities where heat dissipation is not a significant aspect of reactor operations. The cylindrical structure of the TRIGA fuel has small interstitial spaces to account for in terms of added moderator to any analysis. For purposes of estimating space for additional moderator in a flooded condition, the interstitial space is assumed to represent 2% of the total fuel element volume. The fissile concentration (fissile atom-density per FHU) is calculated from the overall volume while neglecting cladding thickness.

1.7.2 Pins or Plates

Fuels with plates (ATR, ORR, MIT, HFIR, Shippingport Pressurized Water Reactor [PWR]) or pins (Fermi cans, Shippingport LWBR, Fast Flux Test Facility [FFTF]) generally experienced higher power densities and the associated heat dissipation. Calculations of void fractions for estimating H/X ratios used a value of 50%. While more rigorous calculations might show a range of 40–60%, comparison of calculated H/X ratios for a fuel like Shippingport PWR shows a net effect on a calculated H/X ratio, ranging from 1,194 (40% void) to 1,214 (50% void) to 1,234 (60% void) within an SDC.

1.8 Packaging Limitations

Limitation on the packaged fuel within any given SDC must demonstrate an ability to maintain a calculated k_{eff} below an assigned interim critical limit.

1.8.1 Initial Packaging—Dry (Carbide) Versus Wet Loading (N-reactor)

Initial packaging for any of the DOE SNF should be accomplished with the goal that subsequent disassembly and repackaging or modification of an SNF canister at a later date would not be required.

N-reactor type fuel creates the bulk (by mass) of the total of DOE fuel. These have been loaded in MCOs while underwater, so the fully flooded, intact condition for single MCOs has already had to satisfy criticality risk criteria. The MCOs are loaded underwater, have a head installed on the MCO while underwater, and are then dried after loading. The loaded MCOs are then transferred to a dry storage facility while awaiting shipment to the repository.

The remainder of the DOE SNF inventory exists in either dry or wet storage. Current expectations are that all remaining DOE fuel will be loaded in a dry environment. Fuel that is currently in wet storage will undergo a certified drying step prior to loading in any canister. Many fuels currently in wet storage

are already undergoing transfer to dry storage prior to packaging, but without undergoing any certified drying operations.

1.8.2 Interim Storage at Shipper—Dry Canister Array

By necessity, there will be some number of interim or lag storage positions in a dry facility that can be monitored for storage conditions. After they are loaded and sealed, all the SNF canisters will continue to be stored in a dry environment in order to minimize corrosion and water reintroduction due to an undetected or infantile failure of the canister.

1.8.3 Transportation Cask

The transportation casks suitable for DOE fuel shipments have yet to be designed. Furthermore, the quantity and arrangement of SNF canisters inside these casks are yet to be determined. There is an expectation of multiple SNF canisters within each transport cask, and there is an expectation of a poisoned transport cask basket to deal with the potential of water flooding for accident conditions.

1.8.3.1 Dry, Poisoned Array. The initial calculations for a single canister of DOE SNF address a loaded fuel canister with both fuel and basket both dry and intact. The criticality analysis models developed for post closure (initial conditions of dry and intact) would be valid for use in canister arrays within the transport cask models.

1.8.3.2 Flooded, Poisoned Array. Follow-up calculations examine the loaded DOE SNF canister with both fuel and basket intact. These flooded calculations are generally conducted with any intact, unpoisoned basket. Incorporating poison into any proposed SNF canister resulted from subsequent calculations that showed the need for some degree of poisoning based on assumptions relative to fuel or basket degradation. The proposed gadolinium poisoning has been shown to be more effective in a fully flooded condition because the neutron capture cross section improves with a more thermalized system.

1.8.3.3 Differentially Flooded, Poisoned Array. There is an expectation that shipment of multiple SNF canisters in the same transport cask will be used to minimize costs associated with transport of the canisters to the repository. The failure scenarios have yet to be formed for such transportation casks, but there is some certainty that water inside the transport cask will be a given. An issue that will need to be resolved is whether the integrity of the loaded SNF canister can be maintained during a transport cask drop accident scenario. That case may need to be addressed specifically for the differentially flooded scenario (SNF canister flooded/transport cask dry). Such a condition promotes neutronic coupling that would require a poisoned basket within the transport cask, because some DOE SNF canisters have no required poisoning.

1.8.4 Interim Storage at Repository

Interim storage for DOE SNF canisters at the repository surface facility is still in preliminary design stages. The canisters as received from the shipper in the transport cask will be unloaded behind shielding walls and within an enforced moderator exclusion zone. Storage will need to accommodate SNF canisters that range from 18-in. to the 25-in. diameter MCOs. Heights will range from 10 to 15 ft. Canisters would be handled only one at a time and would be unloaded from the transport cask or loaded into any waste package in a vertical orientation.

1.8.5 Postclosure at Repository

Postclosure conditions in the repository cover the time period, at least for criticality analysis, from the time of drift emplacement of any waste package containing DOE SNF canisters out to beyond 100,000 years.[7,8,9] This amount of time is needed to evaluate fuel/basket performance for total degradation if water were to breach the waste package/SNF canister combination.

1.8.5.1 Single Canister—Intact/Dry. Single SNF canisters that have been horizontally placed in a codisposal waste package provide a convenient baseline case for criticality analysis with intact internals.

1.8.5.2 Single Canister—Intact/Flooded. The distribution of fissile material enforced by the intact fuels has not required poisons as long as the fuel and basket geometries are maintained, even though they have been flooded with water.

1.8.5.3 Single Canister—Degraded/Flooded. Analyses have shown that it is only the degraded condition of some fuel and baskets with fully moderated conditions that require a quantity of neutron poisoning. The flooded degradation scenarios are singularly tied to postclosure in the repository; there were no identified scenarios in the preclosure timeframe that provided both fuel reconfiguration and moderator introduction. A specialized-case analysis[10] was completed for the self-moderated TRIGA fuel that indicated poisoned basket tubes could provide the necessary poisoning to remain below the critical limit for a reconfigured fissile mass due to a drop accident.

2. CANISTER FEATURES

SNF canister designs are classified by diameter and length (e.g., 18-in. diameter and a 10-ft length) based on a standard design. An exception to this nomenclature is the MCO, which is designed to accommodate the low-enriched fuels associated primarily with the N-reactor at Hanford.

2.1 Canister Designs

SNF canister designs have attempted to standardize both length and diameter. The end result has been the evolution of SNF canister with both 18- or 24-in. diameters and either 10- or 15-ft lengths. The singular exception for DOE SNF packaging is the use of a MCO for N-reactor fuels. This MCO package has a maximum outer diameter of 25.31 in. and a length of 166.42 in.

2.1.1 18 Inch—Short

This canister has a specified overall length of 10 ft and an outer diameter of 18 in. The usable space inside the canister equates to an internal length of 8.4 ft. The maximum inside diameter is determined by the outer diameter (18 in.) minus two times the wall thickness (0.375-in.), which equals 17.25 in. Additional diameter reductions are expected to accommodate the possibility of an internal sleeve (TBD based on fuel type and basket design) and account for manufacturing tolerances of the pipe used in canister fabrication.

Typically, planned use of the smaller diameter canisters is reserved for those medium and highly enriched fuels identified in the DOE inventory. To affect the codisposal strategy, the shorter fuels are shown in the short canisters to fulfill a need to match (approximately) the number of 10-ft HLW canisters generated at both Savannah River and West Valley. Packaging of DOE fuel for minimizing criticality risk is virtually independent of canister length. Most analyses for the fuel loads being contemplated would show the infinite cylinder length to be in the range of 5 to 6 ft. For purposes of definition, the infinite length is that length which produces the same calculated k_{eff} regardless of the canister length.

2.1.2 18 Inch—Long

This canister has a specified overall length of 15 ft and an outer diameter of 18 in. The usable space inside the canister equates to an internal length of 13.6 ft and an internal diameter of 17.25 in. Additional diameter reductions are expected to accommodate the possibility of an internal sleeve (TBD based on fuel type and basket design) and account for manufacturing tolerances of the pipe used in canister fabrication.

The use of the longer 18-in. canisters is generally reserved for those longer HEU fuels. Exceptions may occur as in the case of the Ft. St. Vrain fuels, where three-high stacked blocks in short canisters versus five-high blocks in long canisters would cause an inordinate increase in the total number of SNF canisters generated.

2.1.3 24 Inch—Short

This canister has a specified overall length of 10 ft and an outer diameter of 24 in. The usable space inside the canister equates to an internal length of 8.2 ft. The maximum inside diameter is determined by the outer diameter of 24 in. minus two times the wall thickness 0.500 in., which equals 23.00 in. Additional diameter reductions are expected to accommodate the possibility of an internal sleeve (TBD based on fuel type and basket design) and account for manufacturing tolerances of the pipe used in canister fabrication.

Relative to DOE fuels, this would be a specialized canister loading related most likely to the disposal of LEU fuel or packaging of small quantities of HEU material in high-integrity canisters (HICs).

2.1.4 24 Inch—Long

This canister has a specified overall length of 15 ft and an outer diameter of 24 in. The usable space inside the canister equates to an internal length of 13.33 ft and a nominal internal diameter of 23.00 in. Additional diameter reductions are expected to accommodate the possibility of an internal sleeve (TBD based on fuel type and basket design) and account for manufacturing tolerances of the pipe used in canister fabrication.

There are to date two identified uses of this particular canister design. They are both related to highly enriched fuels, i.e., High Flux Isotope Reactor (HFIR) (outer assembly only) and Shippingport LWBR power flattening blanket assemblies. Both fuels contain significant quantities of fissile material, but because of their physical size cannot use the 18-in. canister. These fuel units appear to require poisoning internal to the fuel assemblies themselves in conjunction with their installation in the 24-in.-diameter canister.

2.1.5 Multi-canister Overpack

Developed initially as an interim dry-storage container for various N-reactor fuels, the MCO is now in the process of being loaded and qualified for other fuels such as the single-pass reactor fuel and Shippingport LWBR blanket material (depleted U).

The MCOs are constructed of 304L stainless steel and are standardized with respect to dimensional information (lengths, diameters, canister thickness, head closure details). The MCO has a maximum outer diameter of 64.29 cm (25.31 in.) and an overall length of 422.707 cm (166.42 in.).[11]

The internals of the MCO (baskets) vary depending on what type of fuel is being loaded. The Mark 1A fuel can place up to 288 elements in a six-high basket stack. The Mark IV fuel baskets are designed to accommodate up to 270 elements. Either MCO is designed to accommodate scrap baskets installed on each end of the stack. Each scrap basket can be loaded up to 50% of the fuel installed in an intact basket.

Current plans are to modify the internal basket design to allow packaging of single-pass reactor fuel in the MCO. Yet other planned modifications to the MCO internals will also allow for packaging of the irradiated, depleted uranium associated with the Shippingport LWBR reflector assemblies.

2.1.6 Application

Use of standardized canisters provides a basis for predictability in terms of fissile loading. Furthermore, it allows for minimization of packaging variants within a waste package. Generally, the 18-in.-diameter canisters were used for packaging the MEU and HEU fuels within the DOE fuel inventory.

There are no specified lower fissile load limits below which criticality risk is not a concern or must not be addressed. The standard canister is far larger in diameter (and fissile mass content) than the single parameter limit of 5.39 in. for a fissile solution (760 g ^{235}U) with an infinite reflection (see Reference 4). It is all the other assumptions concerning fissile mass, its distribution within the canister, presence of inert materials, and limitations on available moderator that enable a packaging strategy with the large diameter canisters. In certain circumstances, some of the proposed fuel packages ended up with an identified need for some degree of poisoning.

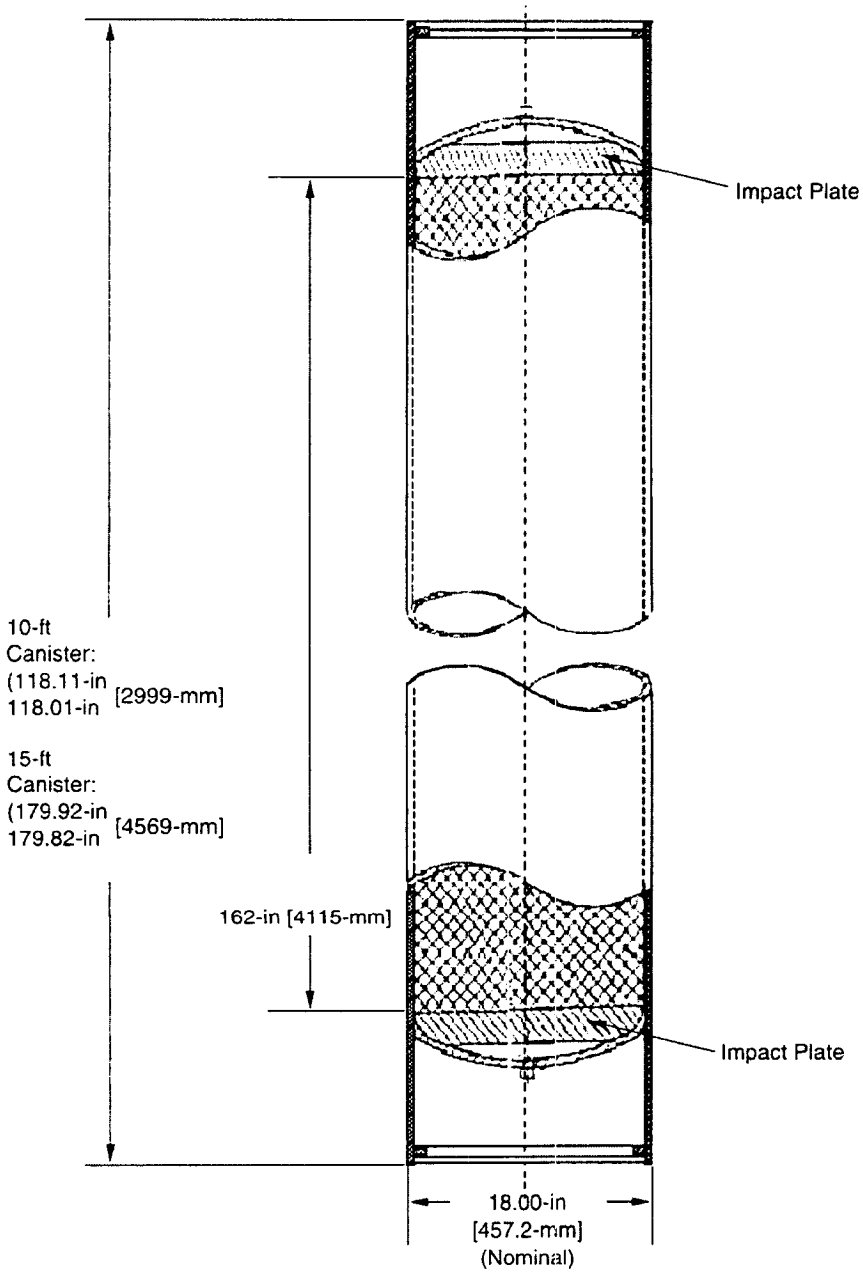

03-GA50387-15

Figure 3. Standard 18-in. spent nuclear fuel canister.

Within any canister, whether 18 in. or 24 in., criticality analysis has always addressed the radial expansion of materials and components within any proposed canister loading. There were exceptions such as the Shippingport PWR assemblies, where the structure and materials used allowed the analyst to take credit for retention of geometry and containment of fissile material. So for any fuel other than Shippingport PWR that uses the proposed basket for this fuel, the analysis must at least consider the possibility of radial expansion of fissile material outside the bounds of the fuel/basket combination.

The 24-in.-diameter canisters were generally reserved for the LEU fuel packaging. Because of the lower fissile enrichments and correspondingly higher ^{238}U concentrations, use of larger diameter canisters for an equivalent PWR fuel assembly[12] is possible without poisoning, even when applying the more stringent critical limit of k_{eff} <0.93 for DOE SNF to commercial fuels.

A summary of the basket identification numbering system appears in Table 5. Variants of those basket types found in Appendix A use nomenclature such as Type 1a-2 to denote two-stacked Type 1a baskets.

2.1.7 Canister Materials of Construction

The preliminary design specification promoted for the standard canister calls for use of 316L stainless steel for canister construction.[13]

2.1.8 Internal Sleeve

There has been some discussion of insertion of a sleeve internal to the SNF canister as an added level of protection against stress risers that might be created by the relatively sharp edges associated with some of the basket designs. Such an installation may impact the allowable fuel loading into a canister. The internal sleeve would impact the criticality analysis by adding to the reflecting surface surrounding the fuel, which could be accounted for by merely adding thickness to the SNF canister. But the internal sleeve also subtracts from the available void volume for water addition to the canister upon some postulated breach.

2.1.9 Basket

Table 5. Spent nuclear fuel baskets and applicable fuels.

Type	Baseline fuel	Other fuels
1a	ATR—poisoned plates	MIT, ORR, Peach Bottom
1b	ORR—nonpoisoned	(Alternative basket)
1c	MIT—poisoned plates	(Not used)
2a	Mark 1A—MCO fuel basket	Single pass reactor
2b	Mark IV—MCO fuel basket	
3	FFTF—spoke and wheel (poisoned)	HICs?
4	Fermi—12-tubes (poisoned basket)	Peach Bottom
5	TRIGA—37-tube (poisoned basket)	Individual fuel pins?
6	Shippingport PWR—single square	
6a	HFIR (inner)—single pipe/large diameter canister/TMI	
6b	HFIR (outer)—single pipe	
6c	Shippingport LWBR—single rectangle	
7	Generic—four-quadrant	HICs?

2.1.10 Positioning Fuel Elements at Loading

Fuel elements are expected to be loaded in any basket structure or SDC while in a vertical orientation. Fuel baskets loaded outside the fuel canister will also be loaded vertically into the respective canister. Other fuel baskets may be integral to the canister at the time the canister is moved into the loading station. Generally, such configurations will require greater lift heights of the individual fuels at the time of loading.

There will be necessary dimensional allowances in each basket position to facilitate canister loading. As such, individual fuels may be positioned slightly closer together than for an array of fuels in a horizontally oriented canister. Horizontal orientation is the preferred position for performing criticality analysis. Such orientation reflects the position expected for all fuels at all times other than the initial loading in the open canister and loading the sealed canisters in the waste package. Any vertical orientation of a loaded SNF canister is expected to occur only under moderator exclusion controls. None of the baseline criticality analyses completed to date show any reactivities even approaching the critical limit without the presence of moderator.

2.1.11 Poisoned Canisters

Some baseline fuel loads in an SDC require the addition of neutron poisons. The use or need of such poisons appears to be required only for the degraded cases, where either the fuel or the basket degrades internal to the SDC.

2.1.11.1 Aluminum Fuels. Baskets intended to facilitate packaging of aluminum-based fuels plan to use a Hastelloy C-4 alloy modified with ~2 wt% gadolinium. This basket design will be designated as a Type 1a basket. Use of this ten-compartment basket design does not necessarily optimize the packing density of fuels of other smaller fuels. Use of other baskets is not precluded if the necessary criticality analyses are performed to demonstrate equivalency with parameters modeled in the Type 1a basket (see Figure 4), e.g., linear loading, total fissile, enrichment, and H/X ratio.

2.1.11.2 MOX (FFTF). MOX fuels are best typified with the FFTF fuels and their approximate loading of 9 kg fissile ^{239}Pu per element. The wheel-and-spoke design was established to accommodate both the FFTF assemblies and the IDENT-69 canisters with their various fuel loads of partially disassembled FFTF assemblies and loose rods. The combination of specified poisoning requirements and the uncertainties associated with fissile distributions inside the IDENTs requires a derating of the canister. This is accomplished by blinding one of the loading positions such that only five FFTF assemblies or four FFTF assemblies and one IDENT can be loaded in the canister.

2.1.11.3 UZr-Mo (Fermi). The packaging strategy for this canister requires poisoning both the basket tubes containing the cans with the derodded fuel pins, and poisoned beads interstitial between the basket tubes. The poisoned beads perform a twofold function. They provide additional poison to the package for the degraded condition and moderator exclusion to further enforce an undermoderated condition within the SDC.

2.1.11.4 UZrHx (TRIGA). The baseline analysis identified a minimum of 12 poisoned tubes out of 37 tubes in a basket. Consideration of controls during basket fabrication suggests it would be easier to ensure poisoning installation, both in terms of quantity and location, if all tubes were poisoned. The incremental cost of the additional poisoned tubes is minimal to the overall cost of the SDC itself.

2.1.11.5 U/Th oxide (Shippingport LWBR). The Shippingport LWBR analysis was based on just the seed assemblies because they would fit inside an 18-in. × 15-ft SDC. Yet the fissile loading coupled

with the ^{233}U fissile isotope makes this fuel a candidate for poisoning for degraded cases. Because the packaging per canister is limited to a single assembly, use of poisons peripheral to the assembly offers no appreciable reduction in reactivity. Poisoning for this particular assembly must address radial expansion of the pins inside the basket partition. To affect the poisoning for this eventuality, the addition of poisoned beads to the fuel assembly compartment after fuel installation is indicated.

The various power flattening blanket designs for Shippingport LWBR provide yet another problem for packaging. The blanket assemblies contain both greater quantities of fissile material and are of a size that dictates disposal of the intact assemblies in the 24-in. × 15-ft SDCs. Neither the increased cross-section dimension nor higher fissile quantities contribute to increased criticality risk. Ongoing analyses indicate both poisoning and maintenance of geometry are needed to minimize criticality risk with these assemblies in the flooded condition.

2.1.12 Nonpoisoned Canisters

2.1.12.1 U-metal (N-reactor). N-reactor fuels and other associated fuels with similar characteristics (single-pass reactor fuels) have such low enrichments (≤1.25% enrichment) that they are incapable of achieving criticality except in highly engineered systems.

The codisposal concept that uses two MCOs with two HLW canisters in a waste package remains below subcritical limits for all conceivable scenarios. Indeed, three MCOs loaded with one HLW canister inside a waste package have been shown (see Reference 9) to remain below the critical limit, but the 3 × 1 array in the waste package would create a load imbalance that should be avoided if possible.

2.1.12.2 HEU Oxide (Shippingport PWR). The durability of the Shippingport PWR assembly precludes any degradation scenario. Without reconfiguration of the fissile material within the PWR assembly, there is minimal criticality risk with these assemblies.

Another assembly within the HEU group that has been analyzed (HFIR outer assembly) has construction features that favor degradation and fissile masses consistent with other fuels that require poisoning. The physical size and design of the element require some combination of moderator exclusion and poisoning in the center of the annular assembly.[14]

2.1.12.3 Graphite (U/Th Carbide). Ft. St. Vrain is composed of highly enriched uranium carbide fuel kernels in a carbon matrix. The quantity of fissile material has a relatively small concentration, which when distributed in the carbon block generates a volume-limited system that requires no poisoning regardless of the degradation scenario. These fuel blocks offer the option on stacking three high in a 10-ft canister or five high in a 15-ft canister, and neither configuration requires poisoning.

The other fuel of interest in this group includes the Peach Bottom (both Core 1 and Core 2) fuels. The length of the fuel assemblies dictates loading in a 15-ft canister. However, the currently proposed fissile loading (2.53 kg ^{235}U per canister) is at most 35% of that proposed for Ft. St. Vrain fuels in a 15-ft canister or only 12% of the baseline fuel (Advanced Test Reactor [ATR]) in a 10-position (Type 1a-1) basket.

2.1.12.4 LEU Oxide (TMI Debris). The Three Mile Island Unit 2 (TMI-2) debris canisters constitute the bulk of the LEU oxide material to be disposed of in a standard canister. Much of the remaining LEU oxide material has been identified for disposal as intact and bare commercial assemblies that follow the disposal path identified for all other commercial nuclear fuel.

The TMI-2 debris canisters consist of one of three types of canisters.[15] They are denoted as: (1) defueling (D designator), (2) knockout (K designator) or, (3) filter (F designator). Each canister in the inventory has a listed content for total uranium, fissile uranium, and plutonium. None of the canisters included more than the equivalent of more than one commercial PWR assembly at a maximum beginning-of-life (BOL) enrichment of 2.96%.

3. SHAPES

SNF used in DOE reactors comes in many shapes and sizes. The varieties of these fuels suggest that there can be no one solution to the packaging strategy that will maximize fuel loadings into the standard canisters.

The primary concept of baskets with a standard canister is to facilitate loading fuel in expected vertical loading operations. Fuel that would otherwise crisscross if not constrained in one position until the others fuels are loaded could hinder such vertical operations. Such a structure also provides a defined geometry for a starting point in criticality calculations.

Second, the canister can perform a number of other intended functions. Stacked basket designs can aid in the loading of short fuels in long canisters, while a basket with smaller fuels can be loaded with individual FHUs, then subsequently loaded into the standard canisters.

In addition, a defined basket structure can enforce a prescribed fuel loading that provides some assurance of controlling (by space allocation) the allowable fissile material loaded into any canister for any fuel identified for a specific basket.

3.1 Basket Designs

Basket designs are predicated on providing a predictable array of fuels within a confined space for baseline calculations of intact fuels and intact baskets. Any packaging scheme assumes that fuels will be loaded in a vertical orientation. Furthermore, the goal is to maximize fuel loads given the physical constraints of a standard canister. These goals will be met by a variety of basket designs (details follow) to accommodate the various cross-sectional shapes and lengths of the SNF. However, the open area of each basket position must be such that it does not provide an operational constraint during fuel loading where fuel alignment or slight errors in dimensional information for any fuel might impact the ability to load the given basket.

While there may be an assumed structural integrity of a given basket, that assumption is incidental to the associated criticality risk within the package. It is only if moderator is introduced to the loaded SNF canister that criticality becomes an issue to be addressed and thereby influence basket designs. During fuel loading, the basket facilitates positioning of the fuels within the canister and enforces the limit of fuel that can be loaded in that basket/canister combination, whether by piece count, fissile mass, or physical size of the SNF. Without moderator, there is little neutron interaction in any dry package. Fuel in dry packages exhibits low neutron interaction regardless of the presence of a basket and the pitch of the fuel pieces. Such an assumption does rely on a uniform, linear loading of the canister.

Baskets are not assumed to be specific to fuel types, nor are fuel types assumed to be specific to any given basket design. As an example, the Type 1a basket design for the ATR aluminum fuel will now be applied not only to ATR fuel, but to MIT (Massachusetts Institute of Technology) and ORR (Oak Ridge Research) within the aluminum fuel group, the Peach Bottom fuels within the graphite group, and certain fuels within the HEU oxide group. What is at issue with this mixing and matching of fuels to baskets is not so much what cladding or fuel matrix material is involved, but what linear fissile loading can be enforced for each loaded canister. To this end, the calculated linear loads per canister will be compared against the baseline linear fissile load for that basket based on an intact fuel for that basket. As an example, the shape of the Peach Bottom graphite fuel allows it to be loaded in the 10-compartment basket designed for the ATR fuel, although the basket will be continuous in length rather than segmented for stacking in a canister. The calculated linear fissile loading for the Core 2 Peach Bottom fuel in the standard canister (0.5339 g/cm) should be compared against the ATR linear fissile load for ATR fuel

(85.4331 g/cm). Even when Peach Bottom fuel is compared against Ft. St. Vrain fissile loading (1.8045 g/cm), such a comparison suggests a nonpoisoned basket could be used for Peach Bottom disposal. The use of an unpoisoned Type 1a basket for Peach Bottom fuel would have to be proven through a criticality analysis that would show a calculated k_{eff} for an intact fuel configuration that is less than that for the same basket loaded with ATR fuel.

3.1.1 Fuel Cross-section Designs

The question of structural integrity of the baskets invariably arises during accident scenario discussions. Ultimately, degradation analyses examine the retention of fuel shapes and degradation of the basket, retention of basket geometry and degradation of fuel, and degradation of both. The calculated neutronics between fuels within a canister with a basket will be somewhat attenuated by the basket, but the presence of a poisoned basket is not needed to enforce criticality safety until moderator (as water) is introduced into the SNF canister and degradation occurs.

3.1.1.1 Poisoned (ATR 10-position) Versus Unpoisoned (ORR 10-position) Baskets.

Thin gauge metal wall on the periphery provides containment of fuel elements in stacked baskets. A criticality analysis could neglect the volume of this sheet metal for moderator displacement and its thickness in terms of reflection or could evaluate the reflective boundary of the canister with the added thickness of the sleeve.

Volume basis of a loaded SNF canister will use a nominal 17.25-in. inner diameter for calculating the maximum amount of moderator. The use of a sleeve internal to the canister for some fuels would decrease the inner diameter of the canister. For the undermoderated conditions found in most configurations studied to date, the increase in moderator is likely a more conservative approach to maximizing reactivity than the incremental reactivity increase provided by an added, relatively thin reflective surface.

There is generally an assumed base plate for each basket that will translate into moderator displacement. It also promotes a decreased reactivity between baskets because of its reflective properties. The aspect ratio that the fuels (when stacked end-to-end) present to one another in the basket compartments provides very little neutronic interaction. Such a base plate can provide a small degree of isolation from one basket to another, but at most it is a neutral feature of the canister with respect to criticality.

Design of the baskets are expected to incorporate some type of grappling or lifting capability that will allow nesting of the baskets on top of one another at the time of placement into the SNF canister. It is not the intent of this report to develop these designs, but rather to point out this need to operational personnel so they might be involved in the design process for the baskets.

3.1.2 Basket Heights

Basket heights can be customized to accommodate the length of the fuel subject to disposal. Some fuel may provide a fill-height of some 60%, such that two baskets will not fit in a 10-ft canister, nor would two of them completely fill a 15-ft canister. Such an arrangement suggests a hybrid canister fill with perhaps a medium and a short canister to optimize space (and thereby minimize canister counts). This may require mixing fuels within and perhaps across criticality fuel groups. All such arrangements would require an individual criticality analysis for that canister with intact fuels both dry and flooded. But as long as the linear loading and total fissile mass and calculated k_{eff}s for the canister falls below the baseline criticality analysis done for postclosure, additional degradation analyses should not be needed.

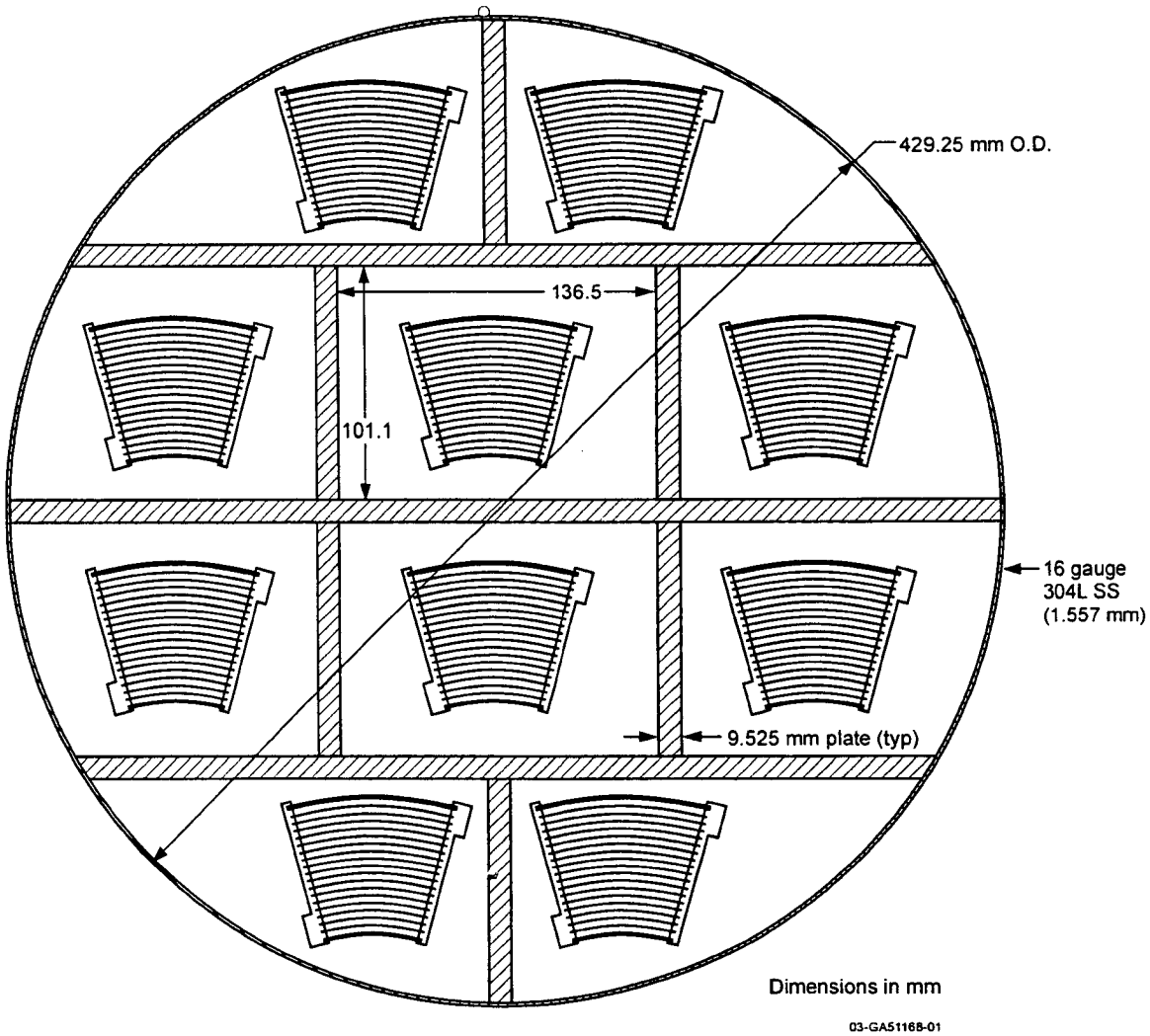

Figure 4. Ten-compartment basket (Type 1a) layout for ATR fuel.

3.1.3 Basket Bottom Plate

The bottom plate will use a standard thickness of 6.35-mm (0.25-in.) without any assumption of poisoning in the plate itself. These bottom plates will only be used when the basket is segmented for stacking inside the standard SNF canisters. The plates are not intended as a physical separation barrier, but rather to facilitate vertical operations with respect to both fuel and canisters.

3.1.4 Basket Materials of Construction

Typically, baskets can be made of any 300 series austenitic stainless steel. Structural performance of the basket material has not been an issue for any canister fuel loading that can take credit for water moderator exclusion. The standard canister itself will be qualified as to leak-tightness and nonbreach for drop scenarios. For those special cases where neutron poisoning is indicated for selected fuel packages under degraded conditions, many times these poisoning requirements can be met exclusively with the use of a C-4 alloy with 2 wt% gadolinium as a basket material (see following details). Incorporating the gadolinium as part of the metal in the C-4 alloy provides a means to distribute the material within the canister in predictable and somewhat homogeneous distribution.

As an outgrowth of the need to both install and maintain a neutron poison in some degraded standard canisters, the NSNFP embarked on a program that led to the development of a corrosion-resistant material containing a highly effective, neutron poisoning material. This development has provided an American Society for Testing and Materials (ASTM)-designated material.[16] This alloy is now also undergoing qualification as an American Society of Mechanical Engineers code-qualified material. Preliminary testing appears to indicate the alloy has acceptable welding properties. In addition, preliminary corrosion tests[17] have also produced results indicating favorable properties to ensure retention of gadolinium within the alloy.

3.1.5 Other Materials

Where criticality analyses have indicated a need to install neutron poisons for some canister loadings, not all poisoning scenarios can be satisfied with the aforementioned C-4 alloy with 2 wt% gadolinium. Both the amount of poison required and the necessary distribution within the loaded canister cannot always be satisfied with a basket made of the C-4 + Gd alloy. An alternative material for gadolinium installation in a package relied on bead materials containing gadolinium, either as a mix in the material itself, or as a spray-coated material. Criticality analysis of the following fuels proposed the use of poisoned beads:

- Fermi—Interstitial to the basket tubes; beads can be preloaded into the basket prior to fuel loading.
- Shippingport LWBR seed—Added to the basket after fuel assembly loading; relies on some movement of the bead material into the interstitial spaces between the fuel pins in the assembly.
- HFIR (outer)—Material in the center annular section and between some of the curved fuel plates (if possible).
- Shippingport LWBR blankets—Inserts in the center and the periphery are needed to restrain the fuel pins from moving.
- FFTF-MOX assemblies—Optional, but desirable to poison against individual pin expansion within each poisoned basket compartment.

Use of poisoned beads provides additional assurance against a criticality through a more uniform or homogeneous distribution of the poisoning throughout the fissile mass. However, their placement inside the canister may require installation inside a hot cell, and verification of its installation is problematic. As with any other material needed to provide poisoning, there are inevitable tradeoffs between ensuring that the amount of poison needed can be distributed in the correct position to provide effective poisoning. In addition, there is the inevitable tradeoff between weight added to a canister with a defined weight limit and additional moderator exclusion.

3.2 Various Basket Designs

Conceptual basket designs were intended to satisfy a need for a specific fuel type within each criticality group. The resultant criticality analyses were used to define a baseline fuel for each of the nine criticality groups. Subsequent to this effort, these basket configurations are now being examined for their usefulness in dealing with the packaging of the other fuels in the DOE inventory.

The use of a conceptual basket design denotes only the fact that dimensional considerations were given to overall diameter and length, and plate or tube thicknesses needed to accommodate reported fuel

dimensions. The design details, e.g., fabrication methods, remote handling features, tolerance stackups, sleeve details, will be deferred to a design agency.

3.2.1 Aluminum Fuels

Aluminum fuels tend to be rather compact and highly enriched. The variety of shapes and sizes of these fuels could, in a desire to maximize the fuel loads in any canister, generate an excessive number of basket designs. In an effort to both standardize and minimize basket designs, a more generic design approach was used. The final cross sections shown in Figure 5 depict on a relative scale how all of them can use a Type 1a basket.

3.2.1.1 Basket Number Designator (ATR)—Type 1a. A scoping analysis identified the suitability of packaging the cropped (48 in.) ATR elements in a ten per basket array and two baskets deep. This proposed package loading resulted in a fissile load of 21.7 kg ^{235}U per canister. The plates used to form the basket compartments are 0.9525 cm (0.375 in.) thick and made from the C-4 + Gd alloy. The bottom plate thickness can vary from 0.635 to 0.9525 cm (0.25 to 0.375 in.) and may use a 304L stainless steel.

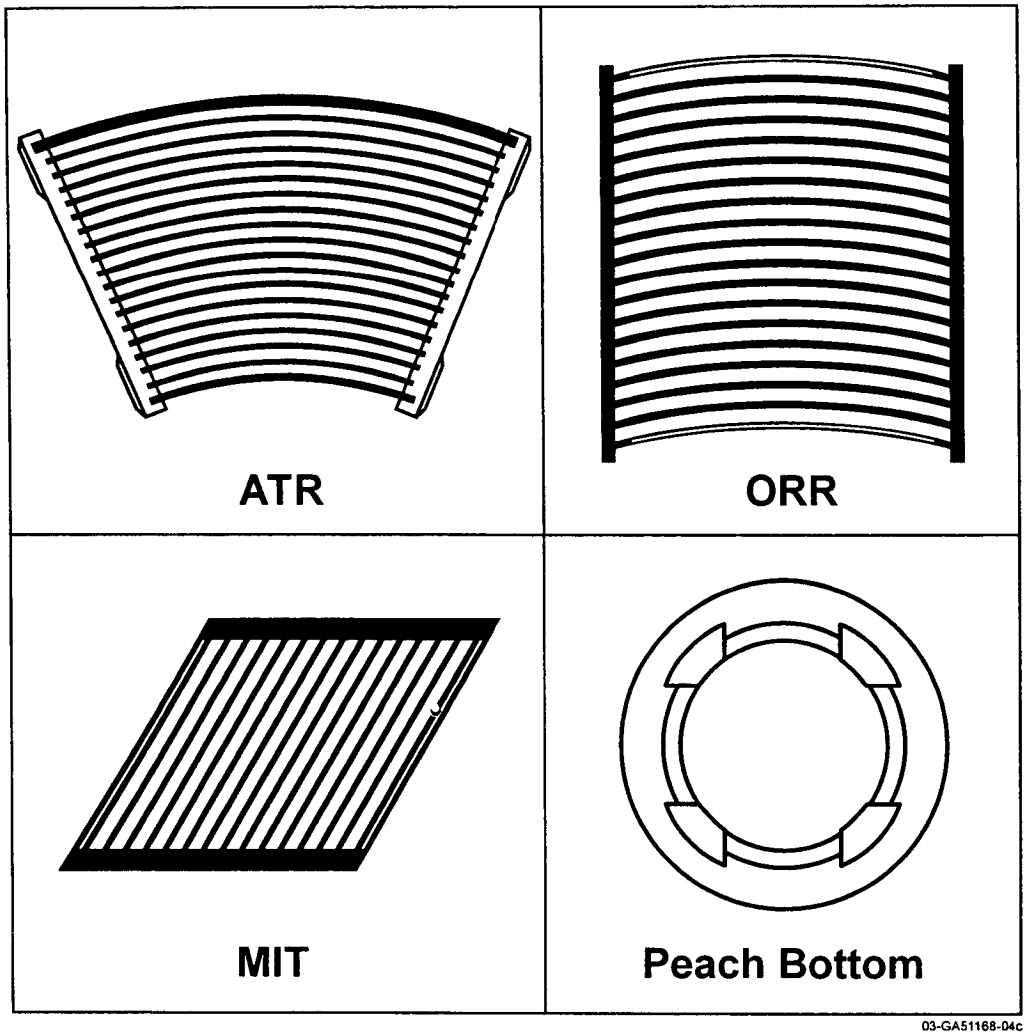

Figure 5. Relative scale comparison of fuels that will fit into a Type 1a basket.

3.2.1.2 Basket Number Designator (ORR)—Type 1b. This basket design is depicted in Reference 18, but has since been supplanted by the conceptual design of the Type 1a basket. The length of this basket design was originally expected to contain fuels of 27.0 in. (stacked four high = 108 in.) in length as envisioned in the original aluminum fuel analysis. The original analysis promoted a 40 FHU count canister loading with 13.9 kg ^{235}U and required no poisoning. This analysis preceded the preliminary design of the standard canister and the 101-in. usable length inside the standard 10-ft canister. The ORR fuel loading now has a proposed derating of only 10 FHUs in three layers for a fissile mass load of 10.410 kg ^{235}U.

3.2.1.3 Basket Number Designator (MIT)—Type 1c. This basket design is also depicted in Reference 18, but has since been supplanted by the conceptual design of the Type 1a basket. The length of this basket design was originally expected to house fuels of 26.25 in. (stacked four high = 105 in.) in length as envisioned in the original aluminum fuels analysis. The original analysis promoted a 64 FHU count canister loading with 32.9 kg ^{235}U and required poisoning. This analysis preceded the preliminary design of the standard canister and the 101-in. usable length inside the standard 10-ft canister. The ORR fuel loading now has a proposed derating of only 30 FHUs in three layers for a fissile mass load of 15.4275 kg ^{235}U; poisoning can likely be satisfied with the quantity of fuel used in the Type 1a basket because it is bounded by the higher fissile loading of the ATR fuels.

3.2.1.4 Basket Number Designator (Peach Bottom)—Type 1a. The basket intended for use with the Peach Bottom graphite fuel (both Cores 1 and 2) will be a variant of the Type 1a fuel basket, but without any installed base plate. Given the relatively low fissile loading in the canister (2.53 kg ^{235}U) in comparison to the Ft. St. Vrain loading of 7.425 kg ^{235}U, which is unpoisoned (based on analysis), no poisoning appears to be needed for Peach Bottom. An early analysis (see Reference 18) indicated that fissile loads in a standard canister without poisoning were possible with this fuel.

3.2.2 MCO (N-reactor and Single Pass)

The MCO is a singular design developed by Hanford to facilitate consolidation of the N-reactor fuel assemblies. The development of the MCO was initially intended only to provide a compact, dry-storage environment for the large quantities of N-reactor fuel in wet-storage. It was only after the fact that efforts are now progressing toward developing acceptance criteria of these packaged fuels in the MCO for repository disposal. There are currently two variants of the MCO. However, these differences are related to the internals of the MCO itself and the number of stacked baskets within each MCO as determined by the physical dimensions of both the Mark 1a and Mark IV fuels. The MCO concept is now being evaluated for modification to accommodate the single-pass reactor elements.

The overall outer diameter (64.287 cm [25.310 in.]) exceeds the allowable canister dimensions inside the proposed 5 × 1 codisposal waste package, so a special waste package has been designed to accommodate the MCOs. The criticality analysis (see Reference 9) indicated that while three fully loaded MCOs in a proposed most reactive environment can be maintained below the critical limit assigned to DOE fuels (k_{eff} <0.93), current packaging strategy for MCOs will use a 2 × 2 array of MCO and HLW canisters in opposing locations to provide a balanced center of mass for the loaded waste package. Adoption of this lower critical limit is significant because it is below the <0.98 limit used by Hanford with respect to the U-metal fuels because of better critical benchmarks.

3.2.2.1 Basket—Mark 1A. The basket design (Figure 6) for the Mark 1A fuel uses a six-high stacked basket design inside the MCO. The MCO basket designs included a basket for scrap material that can be installed in either the top or bottom position in the MCO basket stack. Generally, the basket for scrap material is only in one of those positions and then only with a 50% fill with debris. Most MCOs do not contain a scrap basket.

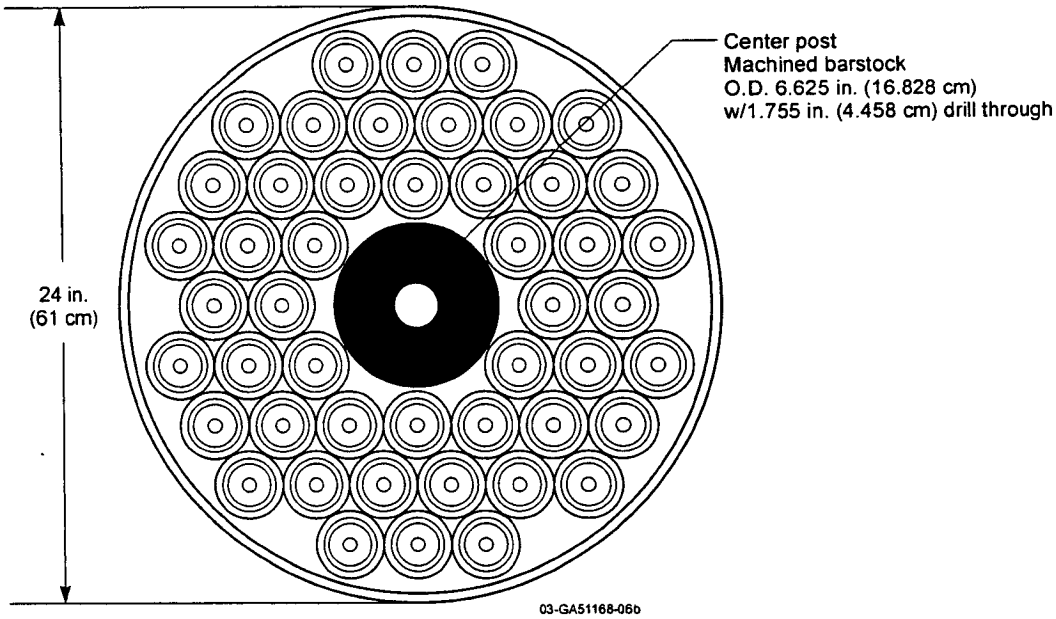

Figure 6. Fuel position layout for Mark 1A fuel in an MCO basket.

Preliminary analysis of the Mark 1A fuel assemblies, when packaged in MCOs, proved to create the more reactive system when modeling for criticality compared to the Mark IV. On a comparative basis, the Mark 1A FHU has a calculated atom density of ~2.11E-04 atoms/b-cm as opposed to 1.97E-04 for Mark IV fuels because of the higher smeared enrichment (1.15%) used in MCNP modeling of the Mark 1A fuels.

Each Mark 1A basket contains 48 N-reactor elements, and a loaded MCO can contain as much as 36.763 kg ^{235}U in 288 elements. The assumed void fraction for these elements coupled with the close packing in an MCO basket yields a calculated H/X ratio that is undermoderated by a factor of two.

3.2.2.1.1 Basket—Mark IV—The Mark IV baskets (Figure 7) use a variant of the Mark 1A basket design in that they are taller so they can only be stacked five high in the MCO. This packing arrangement installs 54 elements per basket, and a loaded MCO can contain as much as 40.915 kg ^{235}U in 270 elements. This results in both a higher fissile load and higher fissile atom-density per MCO that is 11.3% greater than the baseline fuel. This calculated increase is offset by the lower enrichment (higher ^{238}U concentration) that makes criticality impossible with these MCOs for any feature, event, or process associated with the repository. While an MCO loaded with the Mark IV fuel can contain up to two scrap baskets at opposite ends of the MCO, most MCOs do not contain a scrap basket.

3.2.3 Type 3—Wheel/Spoke

The FFTF fuel constitutes the bulk of the fuel in the MOX fuel group. The fuel consists of fissile ^{239}Pu blended with either depleted or natural uranium. Linear fissile loading for the FFTF fuel is biased on the low side if determined by the length of the fuel element. While the fuel assemblies themselves are 3,657.6 mm (144 in.) long, the active length of fissile material is contained within a 91.44-mm (36-in.) segment of the assembly.

Linear (fissile) loads for FFTF fuels are somewhat deceptive because typically it would assume fissile distribution over the length of the canister internals. In reality, the fissile material exists within only an approximate 3-ft length. Criticality analyses have always addressed the more highly concentrated

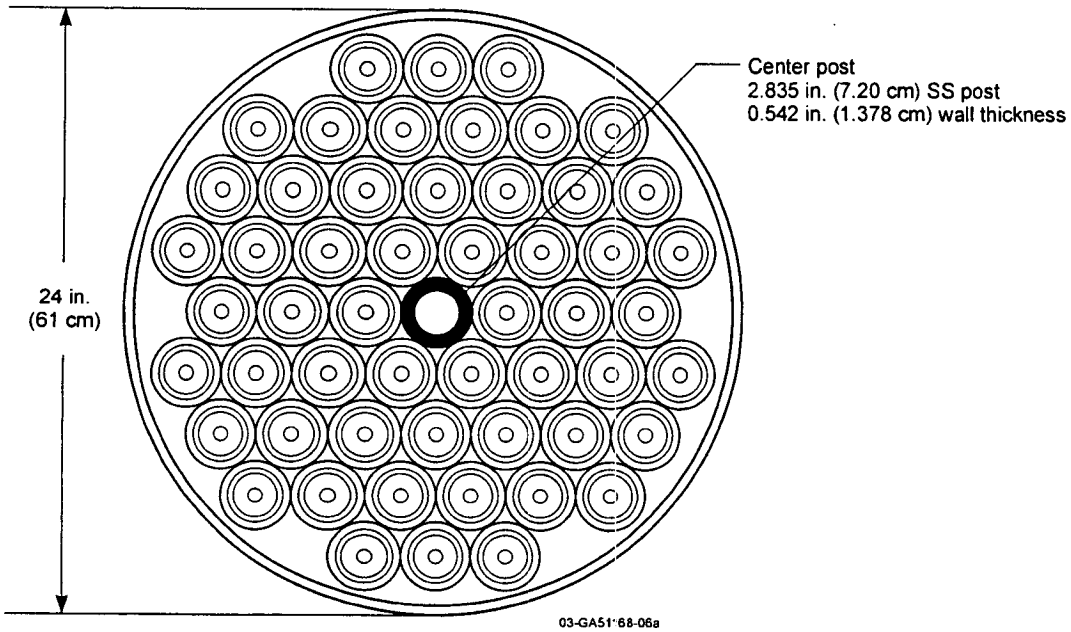

Figure 7. Fuel position layout for Mark IV fuel in an MCO basket.

aspect of fissile concentration for these fuels. The linear loading of fissile material projected over the length of the canister is approximately 118 g/cm. For comparison, this is significantly less than the fissile linear loading in a canister of approximately 532 g/cm across five fuel assemblies.

One issue associated with these FHUs was the creation of IDENT 69s. These devices are separate canisters that contain partially disassembled FFTF assemblies and individual fuel pins from assemblies that had undergone postirradiation examination. The "wheel" in the wheel-and-spoke basket design (see Figure 8) was specifically assigned to accommodate the IDENTs in the center position; driver fuel assemblies would be inserted in the outer positions. Uncertainties associated with the fissile loads and pin arrangements within any given IDENT required use of additional conservatisms in the criticality analysis by optimizing the H/X ratio (see References 2 and 19).

Detailed criticality analysis evaluated the wheel-and-spoke basket for its ability to isolate neutronically the individual elements from one another inside the basket compartments. While a poisoned basket could provide some decrease in reactivity, it proved difficult to obtain a calculated k_{eff} that was less than the established critical limit for this isotope without derating the canister. This was done by limiting the installed FHUs to either four driver fuel assemblies and one IDENT, or five driver fuel assemblies. Such a loading can be enforced by blinding off one of the basket positions prior to canister insertion into the fuel-loading cell. Other applications may be able to use all basket positions based on a specific criticality analysis with that proposed load. Poisoning requirements identified in the criticality analysis (see Reference 2) consisted of 9.29 kg gadolinium. Given more detailed information with respect to IDENT container contents, subsequent criticality analyses (see Reference 3) identified a more substantial poisoning requirement of 30.8 kg gadolinium per canister. Such a level of poisoning will require installation of gadolinium in forms other than that which can be incorporated in the C-4+Gd alloy.

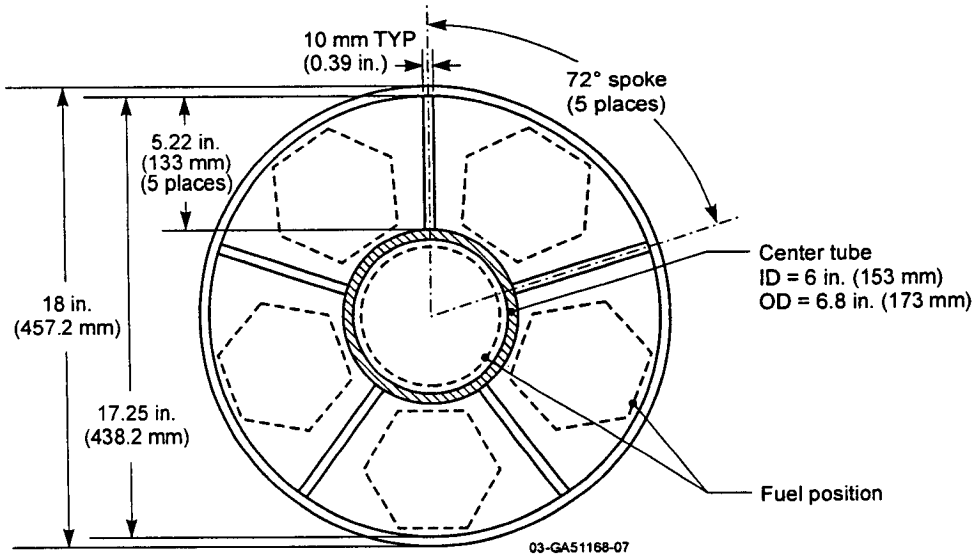

Figure 8. Wheel-and-spoke basket (Type 3) for FFTF assemblies and IDENT-69s.

3.2.4 UZr/UMo (Fermi)

Fermi fuel packaging provides the highest fissile loading of any proposed pack configuration with the DOE fuel inventory. The fuel consists of individual fuel pins that are each accounted for as individual FHUs in the database. The individual pins originated from disassembly of the Fermi fuel. The pins are loose-packed inside each can.

The fuel cans have an overall length that allows stacking fuel baskets (see Figure 9) two high inside the standard 10-ft canister for a total of 24 fuel cans per canister. Criticality analysis demonstrated that poisoning is required for the degraded condition. However, the amount of gadolinium that is needed to ensure the calculated k_{eff} remains below the critical limit is in excess of that which can be incorporated in the basket tubes alone. The approach identified for adding the extra poison was the addition of iron beads with the necessary additional gadolinium in the interstitial space between tubes.

The beads can be preloaded into the basket and verified prior to placement of the fuel cans in the basket tubes. This concept relies on eventual degradation of the iron to goethite, and its retention as moderator exclusion material.

The summary criticality analysis report[20] identified the need for 14.5 kg of gadolinium phosphate ($GdPO_4$); this is equivalent to 9.04 kg of elemental gadolinium. The mass of the proposed basket tubes and a 2 wt% gadolinium content can supply only 7.8 kg of the needed gadolinium mass. The final form and composition of the beads has yet to be finalized. Yet use of the beads provides for a more uniform distribution of gadolinium throughout the canister.

3.2.5 37 Tubes (TRIGA-FLIP)

Development of a basket concept for TRIGA fuels was unique in terms of the range of enrichments encountered in this fuel group. Minimizing criticality risk for any proposed packaging of this fuel category is further complicated by the presence of moderator (as a hydride) in the fuel matrix itself.

There was a variety of fuel types in terms of both fissile loads per FHU and enrichments, and some differences in physical dimensions. The baseline fuel selected to develop the proposed basket

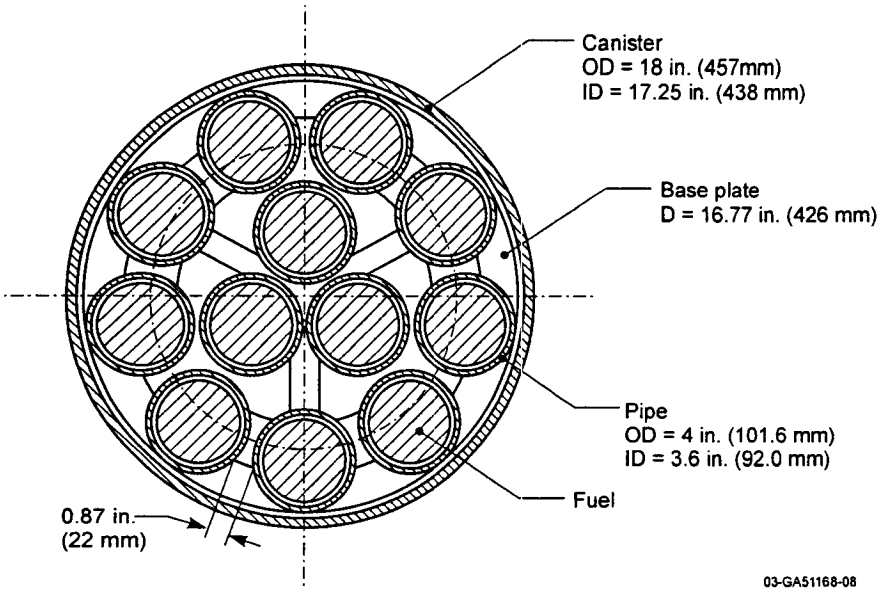

Figure 9. Cross-section layout of a Type 4 basket for Fermi fuel.

concept (Figure 10) used the TRIGA-FLIP fuels with its 70% ^{235}U enrichments. There is a surrogate fuel known as TRIGA-FLIP (LEU) that has a slightly higher fissile mass but an enrichment of only 20%. There is also a select number of TRIGA fuels with 90+% enrichment, but their fissile loading per FHU is less than 20% of that contained in the baseline FHUs.

The criticality analysis (see Reference 8) for TRIGA fuel packaging identified the need to poison a portion of each basket (at least 12 out of each 37 tubes at specific locations). Rather than risk the consequence of the potential for a misload in a canister because of improper location or omission of one or more poisoned tubes, future analyses and proposed configuration should plan on all tubes being poisoned. On the basis of a maximal fissile loading of 15.20 kg ^{235}U based on a full complement of TRIGA-FLIP fuel, substitution of any other TRIGA fuel either intentionally or by accident will not negate the baseline analysis for this fuel type. Further analysis for a dropped canister scenario (see Reference 10) used "all tubes poisoned" to answer preclosure concerns relative to reconfiguration of self-moderated fuels.

Basket dimensions, based on the two basic TRIGA fuel lengths, result in either two or three stacked baskets inside a standard 10-ft canister.

3.2.6 Box or Cylinder

Several of the fuel shapes and sizes within the DOE fuel inventory have physical shapes and sizes that allow only one FHU (Shippingport PWR and LWBR, TMI-2 debris canisters) or a small number of stacked FHUs (HFIR outer). These items either need to be constrained at the time of loading, or they need to be centered in the canister to minimize "rattle room" or prevent weight shifting during subsequent movement of the canisters up to and including loading in a waste package.

None of these simplistic baskets require poisoning, nor would poisoned baskets on the outer periphery of these elements provide any significant reduction in the calculated k_{eff} unless homogenized with degraded fuel.

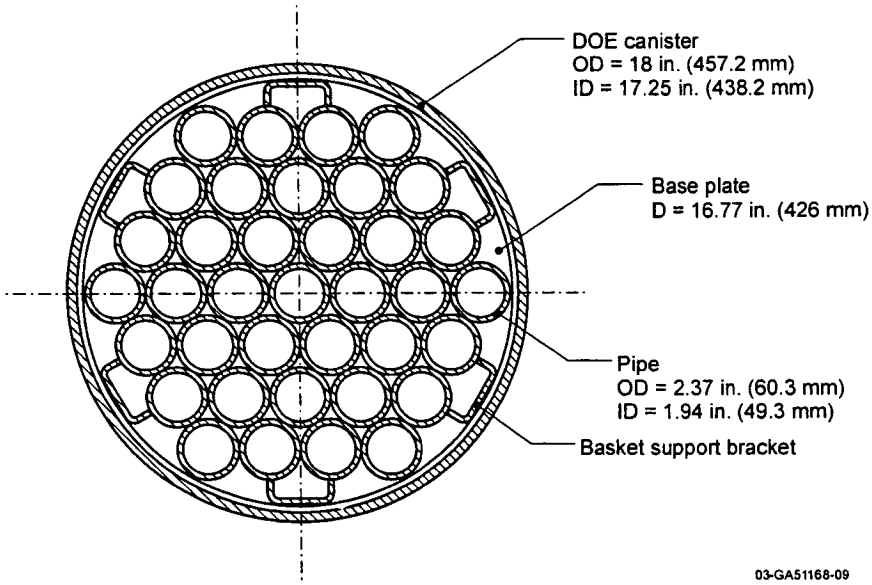

Figure 10. Cross-section layout for Type 5 basket for TRIGA fuel.

3.2.6.1 (Shippingport PWR)—Type 6. The Shippingport PWR baskets merely provide a centering function for the installed assembly (see Figure 11). Specific to this fuel type, credit is taken for the durability of the construction used in this fuel, and no poison was needed based on the criticality analysis done to support this fuel. Other fuel that might employ this basket, where credit cannot be taken for fuel durability, may require a supplemental criticality analysis with degradation for any proposed use of this basket.

The void volume assumed for a Shippingport PWR assembly used a 50% value. Sensitivity to a range of void volumes within the fuel assembly between 40 and 60% represents a change in the global H/X ratio of approximately 1.6% over the entire canister void volume. It is the entire void volume of the canister along with the hypothetical homogenization of the fissile mass for the Shippingport PWR fuel assembly that results in a calculated value that is close to optimal moderation. A 10% change in the void volume strictly within the bounds of the FHU itself yields a greater change in the calculated H/X ratio, but reveals a significantly suboptimal moderation condition.

3.2.6.2 Basket Number Designator (HFIR-inner)—Type 6a. HFIR inner assemblies have yet to be analyzed in any SNF canister configuration. However, based on the ^{235}U loading in each of the inner assemblies (1.84 kg), there is no expected need for poisoning based on similar linear nonpoisoned, fissile loadings. Adaptation of this basket design to the TMI-2 canisters (3% enrichment) also did not require poisoning.

The basket design proposed for this particular fuel assembly resembles that used for the TMI containers, although it may use a slightly smaller pipe diameter. The principal purpose of any basket is to facilitate loading and positioning the fuel inside an SNF canister. Figure 12 provides a preliminary layout and physical dimensions of the proposed basket insert.

3.2.6.3 Basket Number Designator (HFIR Outer)—Type 6b. HFIR outer assemblies dimensionally exceed ever so slightly the inner diameter of the 18-in. standard canister. The alternative approach to disposal for these assemblies is their installation in a centering-sleeve inside the 24-in. standard canister. This center sleeve has been analyzed based on a 0.5-in. thick, 20-in. O.D. carbon steel

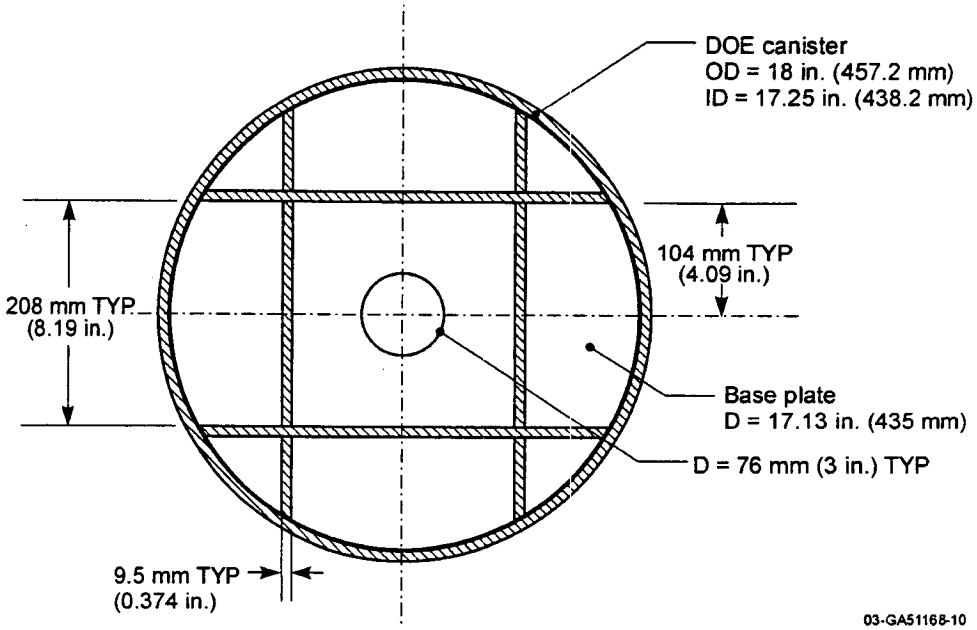

Figure 11. Cross-section for a Type 6 basket.

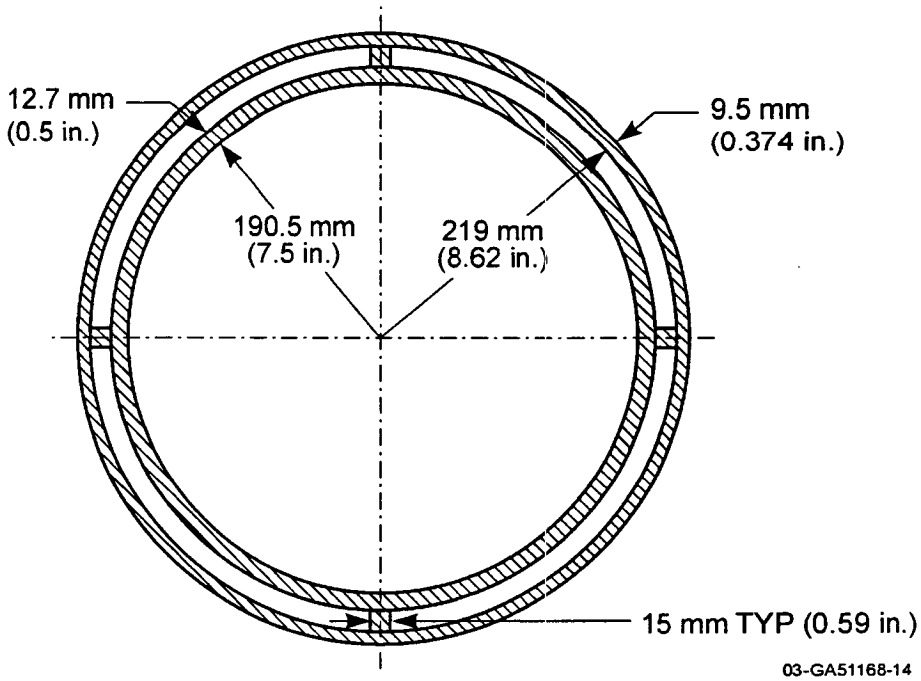

Figure 12. Type 6a basket for HFIR (inner) and TMI-2.

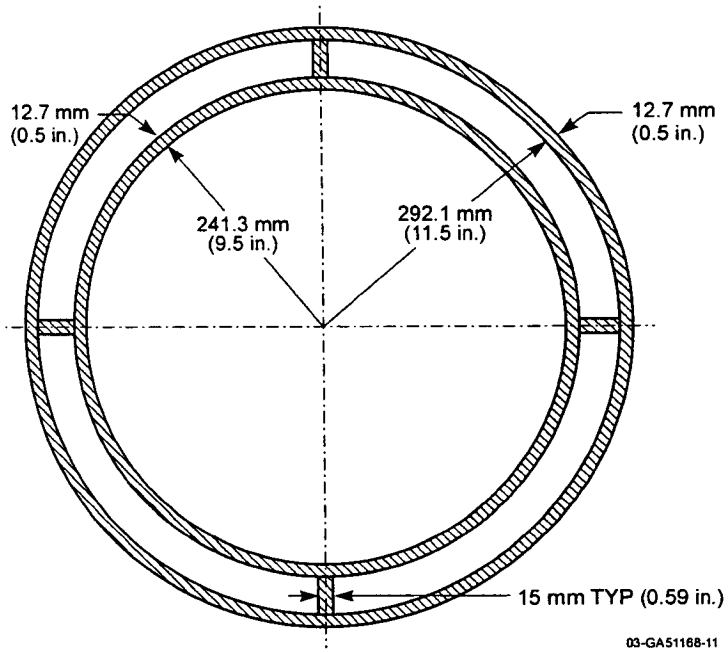

Figure 13. Cross-section of a Type 6b basket—HFIR (outer).

pipe section (see Reference 14). There would be small standoffs (four to six) of 1/2-in. thickness to center this sleeve within the SNF canister.

Gadolinium poisoning with some type of granular material is needed to (a) exclude moderator from the center (void) portion of the assembly and (b) reduce the interaction between the fissile atoms both in place and when repositioned radially because of the potential for collapse into the internal (center) void of the HFIR outer assembly.

3.2.7 Rectangle (Shippingport LWBR Seed)

The Shippingport seed assemblies for the LWBR fuel have a hexagonal cross section.[21] Rather than create a specialized hexagonal basket specific only to the LWBR assemblies, a more generic rectangular basket design was used in the analysis. The cross-section dimensions of this Type 6c basket are shown in Figure 14. The intention of this basket was to provide centering of the assembly inside the canister. The design with respect to the fuel assembly allows for some expansion of the fuel pins in one or more of the degraded conditions. Based on the criticality analysis (see Reference 7), such a degradation scenario requires a small degree of poisoning interstitial to the rods. This analysis used the concept of adding poisoned beads to the basket after the fuel assembly was installed and relied on at least a portion of the beads infiltrating the pins upon degradation of the assembly.

3.2.8 Quadrant Type 7

The Type 7 basket design (Figure 15) is an unproven concept because there has been no specific fuel analyzed for this particular configuration. Neither the basket thickness nor composition (poisoned or not) has been analyzed. Such a concept would be reserved for those fuels with physical sizes too large for any of the baskets with smaller compartments (Type 1a, Type 3, Type 4, Type 5) or larger compartments that would yield suboptimal loading. As always, such a design would have to be analyzed for criticality risk for the intact cases and compared against linear fissile loadings of other canisters. Typically, this canister would be reserved for either low-enriched fuel, or those fuels with very low fissile loadings.

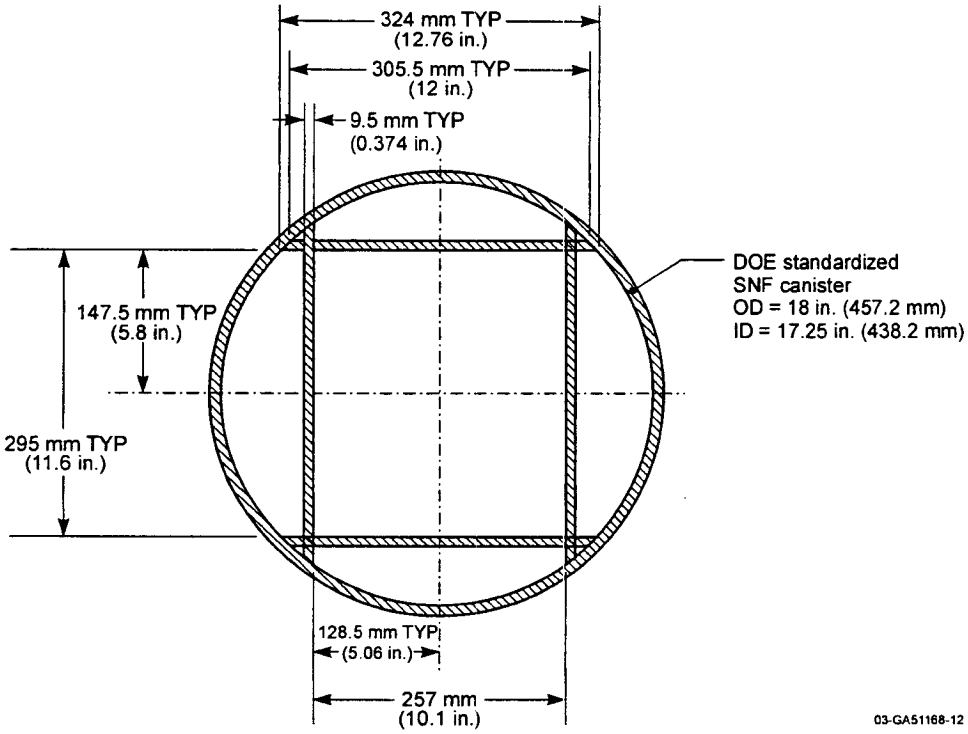

Figure 14. Type 6c basket for Shippingport LWBR (seed).

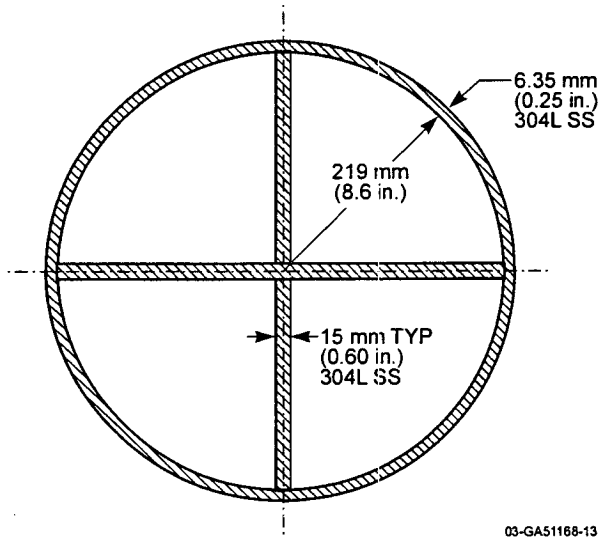

Figure 15. Generic (unqualified) Type 7 basket for proposed HICs.

4. BASELINE FUEL CHARACTERISTICS (SINGLE CANISTER)

The representative or baseline fuel selected for each criticality category led to the use of a canister specific to what was considered to be the practical fissile load limit for that canister. Fuel dimensions played a part in canister selection, knowing that the shorter fuels allowed more flexibility when considering whether a long or short canister was used. Generally, the generation of both 10-ft and 15-ft canisters needs to balance the quantity of 10-ft HLW canisters produced at West Valley and Savannah River and the 15-ft HLW canisters expected out of Hanford.

Certainly the longer canisters will be dedicated for the packaging of the longer fuels. Fuels with a length less than ~100 in. are certainly candidates for packaging in the shorter canisters. As the individual elements get shorter, there is more flexibility in the decision process as to which length canister can be used for packaging.

4.1 UAl_x

The original aluminum fuel analyses considered and evaluated direct disposal as an option that predated many of the concepts that were subsequently applied to the other DOE fuels. Issuance of fuel characteristics reports and application of a standardized criticality methodology (see Reference 1) were an outgrowth of these initial efforts. Development and adoption of a standard canister approach to fuel packaging also evolved as a result of this initial effort.

4.1.1 ATR

ATR fuel elements (see Figure 16) are currently the proposed packaging array of 10 fuel elements per basket and two stacked baskets inside a standard 10-ft canister. This results in a fissile mass load of 21.7 kg ^{235}U per canister. Preliminary analyses indicate gadolinium poisoning is required for this proposed configuration (see Reference 14); subsequent analyses are underway to validate the proposed fissile loads and poisoning schemes. The ATR elements are curved plates with a ^{235}U BOL loading of approximately 1,085 g per element. A calculated void fraction of the fuel of 0.4886 is well within the range of 0.40–0.60 generally assumed for this type of fuel.

Many of the other fuels in this category are smaller in terms of both length and cross section, so will load very well in the 10-compartment basket proposed for ATR, even though the baskets may end up being stacked three or four deep in the standard canister. Almost all the proposed fissile loads result in a fissile loading (on a per canister basis) that is less than 50% of the baseline value. Given a common diameter for all canisters, the linear loading corresponds to the same percentage below baseline values given for fissile loadings.

4.1.2 MIT and ORR

Initially, MIT and ORR fuels were the primary fuel of interest in this fuel matrix category. The resultant analysis was based on SNF canister dimensions that predated design details of the standard canister. Furthermore, while the proposed packaging maximized fuel loads in the canister, both the complexity of the basket design and needed dimensional tolerances preclude the use of these early designs. Consequential plans to treat these fuels in a melt and dilute process led to the development and analysis of a new, proposed fuel form for packaging. Continued funding for this approach for fuel disposal was terminated, and management decisions directed revival of the direct disposal option of the aluminum-based fuels.

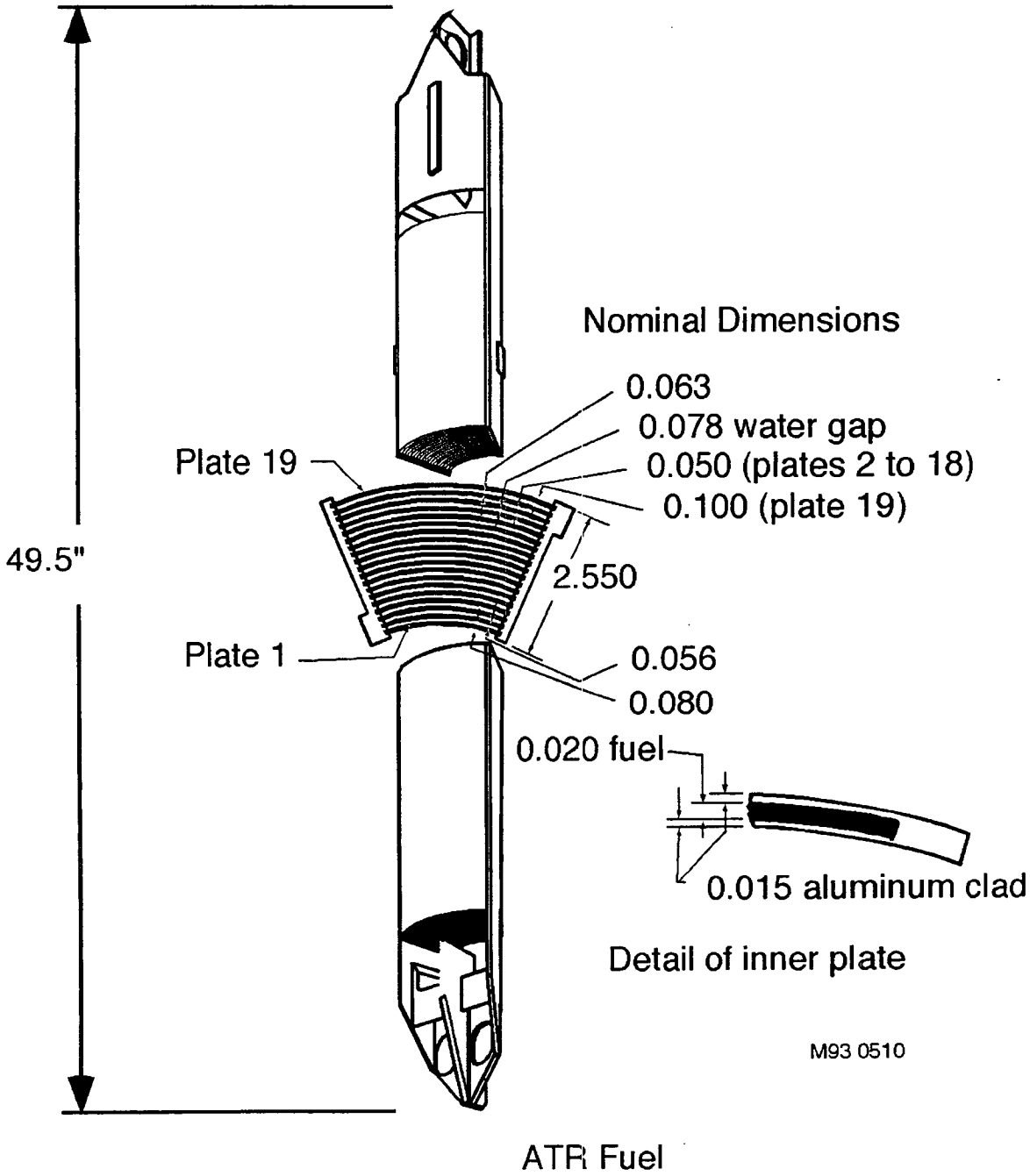

Figure 16. ATR fuel element.

The original criticality analysis completed for this fuel occurred before development of the standardized SNF canister. As a result, the analysis used a fuel configuration that stacked four baskets internal to the SNF canister. However, this analysis made the assumption that the 10-ft canister had 10 ft of usable length internal instead of the ~101 in. in the current design. As a result, the analysis completed for four stacked baskets must be derated to three baskets, but using the same cross-section packing arrangement for the fuels. The original analysis did not indicate a need for a poisoned basket for the ORR fuels. Therefore, maintaining the same fissile linear loading in the canister but shortening the zone that contains the fissile material should yield either the same or a slightly lower k_{eff}. At least for the 18-in. SNF canisters, the "infinite" length of fuel in the canister, e.g., the length at which k_{eff} stops increasing with increasing length, appears to be in the range of 5 to 6 ft based on other, informal calculations.

Reexamination of past analyses (see References 18 and 22) indicated a need to evaluate a more flexible basket design to accommodate a greater number of fuels in this category. At some sacrifice to packing densities (both MIT and ORR fuels and fissile mass), a generic basket design was promoted for ATR fuel that resulted in a higher fissile loading (total and linear) within a standard canister.

4.2 U-Metal

U-metal fuels are dominated by N-reactor fuel (2,096.202 MTHM). One of the next largest contributors to this fuel category consists of the single pass reactor fuels (3.32 MTHM) that are currently slated for disposal in a modified MCO design. The physical size of each N-reactor fuel type is lost when combined as a single entry in the SNF database.

4.2.1 N-reactor/Mark 1A

These fuels should be considered comparable to the Mark IV fuels because they were used in the same reactor. However, on a reactivity basis they proved slightly more reactive in an MCO configuration, so they ended up as the baseline fuel in this criticality category. While the fissile mass of a Mark 1A assembly is slightly less than that of a corresponding Mark IV fuel (see Reference 11), that lesser mass is offset by the increased enrichment (1.15% smeared versus 0.947% respectively).

The Mark 1A assemblies (see Figure 17) are inserted in baskets that are stacked six high with a maximum of 288 assemblies. This load represents a BOL fissile mass of 36.763 kg ^{235}U in an MCO for a calculated fissile atom-density of 9.87E-05 atoms/b-cm. For purposes of comparison, fissile species in Mark 1A fuels 10 years after discharge from the reactor with 12% ^{240}Pu yielded reported masses of the two fissile isotopes of interest as 8.41E+03 ^{235}U and 1.76E+03 ^{239}Pu grams per ton of unirradiated material (see Reference 11).

4.2.2 N-reactor/Mark IV

The Mark IV assemblies (also Figure 17) are inserted in baskets that are stacked five high with a maximum of 270 assemblies. This load represents a BOL fissile mass of 40.915 kg ^{235}U in an MCO for a calculated fissile atom-density of 1.10E-04 atoms/b-cm.

4.3 MOX (FFTF)

The FFTF fuels, which are used as the baseline fuel, constitute 90+% of the heavy metal mass for this category. These fuel assemblies represent a unique problem in terms of minimizing criticality risk. The intact assemblies (Figure 18) require the use of the 18-in., 15-ft canister, yet the active portion of each assembly (Figure 20) is contained within a 3-ft segment. This concentration of ^{239}Pu presents a significant fissile linear loading (531.6 g/cm) versus 117.4 g/cm for intact fuels spread over the internal

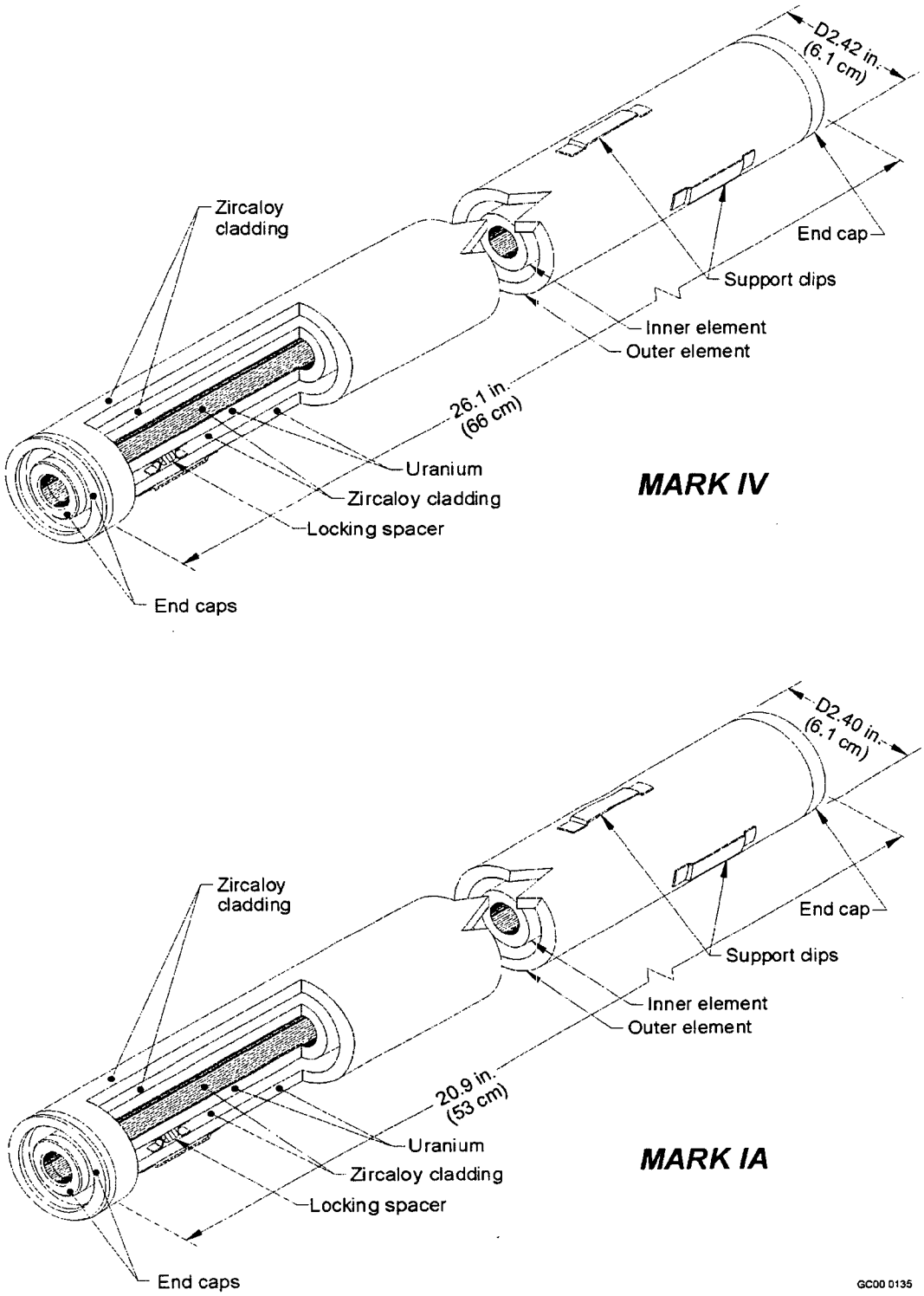

Figure 17. N-reactor fuel elements.

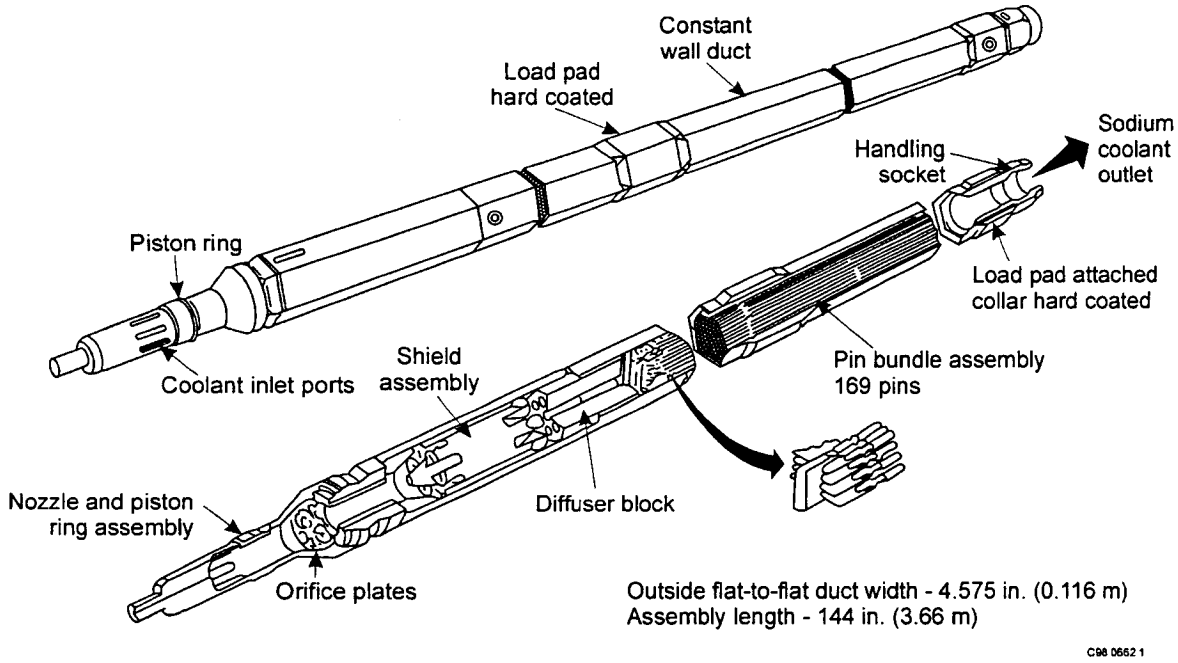

Figure 18. FFTF driver fuel assembly.

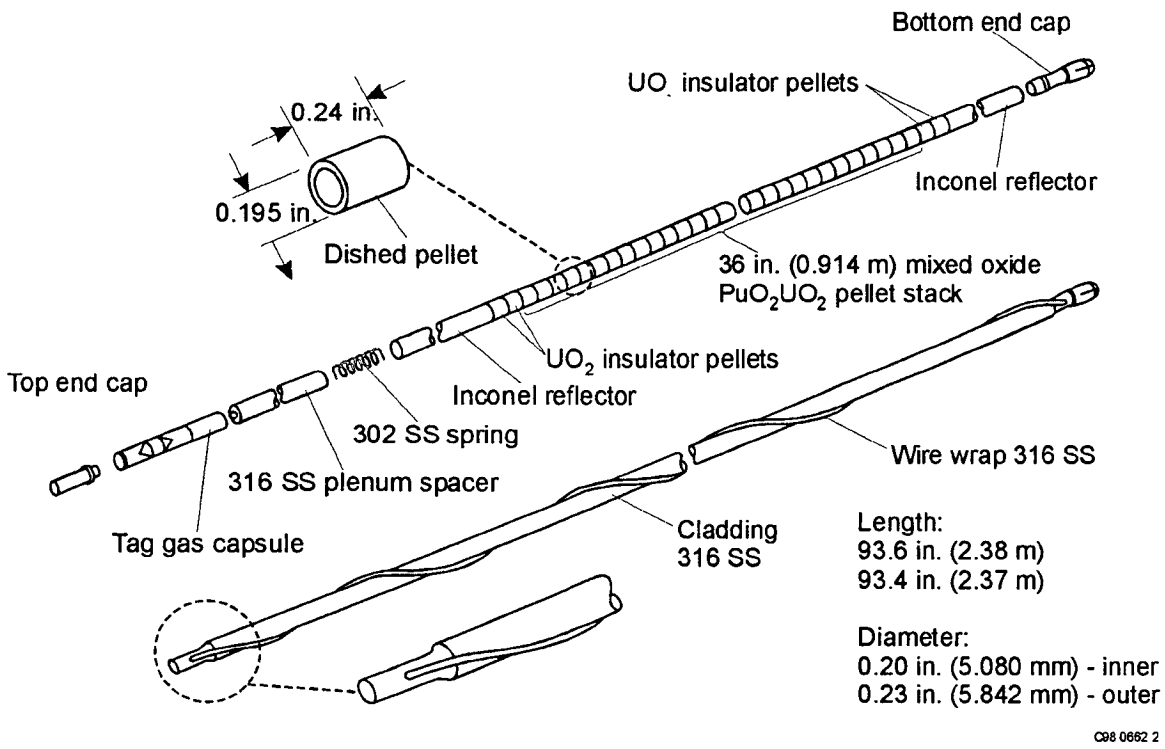

Figure 19. FFTF fuel pin.

length of the loaded canister. The proposed packaging approach adopted a wheel-and-spoke configuration for the basket. Yet even with gadolinium poisoning incorporated in or on the basket, the canister load had to be derated such that only the equivalent of five FFTF assemblies could be loaded in the six positions created by the basket.

Simplifying assumptions were made relative to the FHU displacement and void fraction assigned to any FFTF assembly. Displaced volume used the cross-section of the assembly duct over the entire length of the element, and there was an assumed void volume within the duct region of 50%. When averaged into the total void fraction for a canister, the resultant H/X ratio for the canister calculates to a value of ~260; this represents an undermoderated condition. For an even smaller volume, e.g., the fueled portion of the assembly itself, that portion of the canister would be even further undermoderated.

4.4 UZr/UMo (Fermi)

The proposed packaging strategy for the uranium zirconium/uranium molybdenum (UZr/UMo) fuel resulted in an abnormally high fissile load per canister. The ability to package such a large fissile mass (114.3 kg ^{235}U) inside a single 10-ft canister resides with the derodding and canning of each Fermi assembly inside small diameter cans. Such a configuration results in a substantially undermoderated configuration. This lack of moderation inside the SNF canister is further enforced by the proposed installation of poisoned bead material (yet to be developed) in the void space between the poisoned tubes (see Reference 20).

The SNF database lists each individual Fermi pin (Figure 20) as a separate FHU (33.691 g/pin @ 25.69% enrichment). There were 140 pins in each Fermi assembly, and these were subsequently packaged 140 pins per can upon derodding. Packaging for this fuel type was predicated on the use of existing cans within the standard SNF canister.

Figure 21 depicts the equivalent of 140 pins inside the fuel can. In reality, the pins are randomly arrayed inside the can, but the void volume inside the can and ultimately in the standard canisters remains the same. The FHU displacement and void fraction calculations for the packaged Fermi cans inside an SNF canister result in a calculated H/X ratio of ~65. This presents a significantly undermoderated condition that is nearly a factor of 10 less than optimum moderation. In the repository environment, perhaps a bigger concern would be the transport of fissile away from the waste package that could result in a configuration that achieves both accumulation and optimum moderation away from any poisons. Such a scenario could easily be shown as a very improbable event through a features/events/process screening.

4.5 $UZrH_x$ (TRIGA-FLIP)

These fuels are unique within the DOE fuel inventory because they are self-moderated by virtue of hydrogen incorporation in the fuel matrix as a hydride compound. There a number of variants in this fuel design in terms of cladding, enrichment, and length (see Figure 22). The most reactive fuel within this inventory set consists of the TRIGA-FLIP fuel at 70% enrichment.

The basic basket design (see Figure 23) for the bulk of all TRIGA fuel used a 37-position array stacked three deep inside a 10-ft canister. There is one specialized fuel shape known as a fuel follower control rod. The length of this element dictates a two-high basket stack inside a 10-ft canister.

An ongoing privatization effort involved with receipt and packaging of TRIGA fuel has proposed the use of a two-high basket stack with TRIGA standard (20% enrichment) fuel. Each basket has a proposed 54 positions per basket and minimal poisoning. A detailed criticality analysis of this proposed

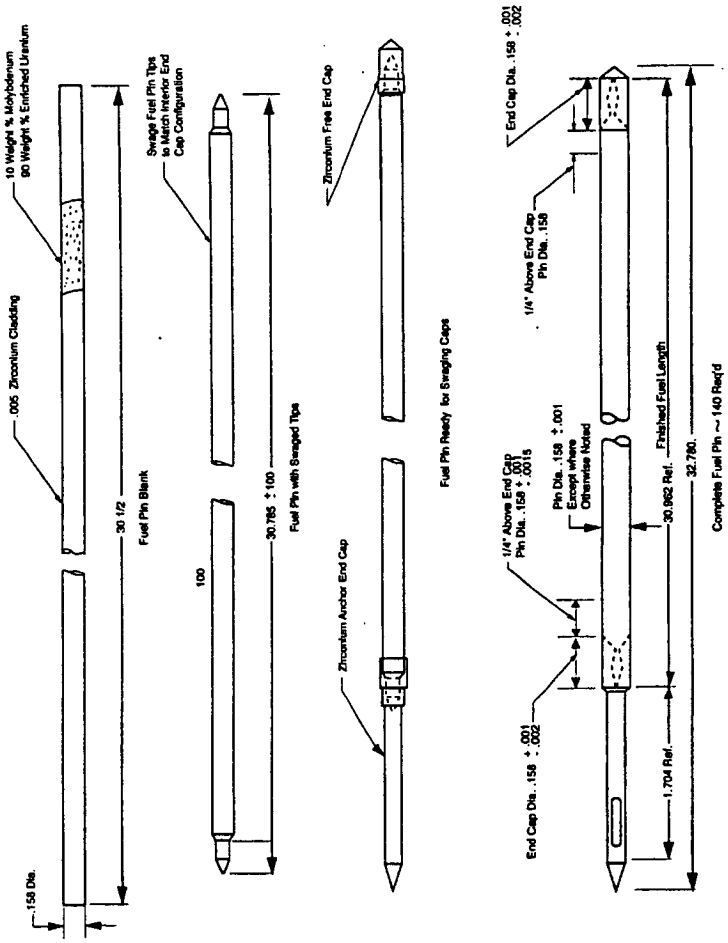

Figure 20. Fermi fuel pin details.

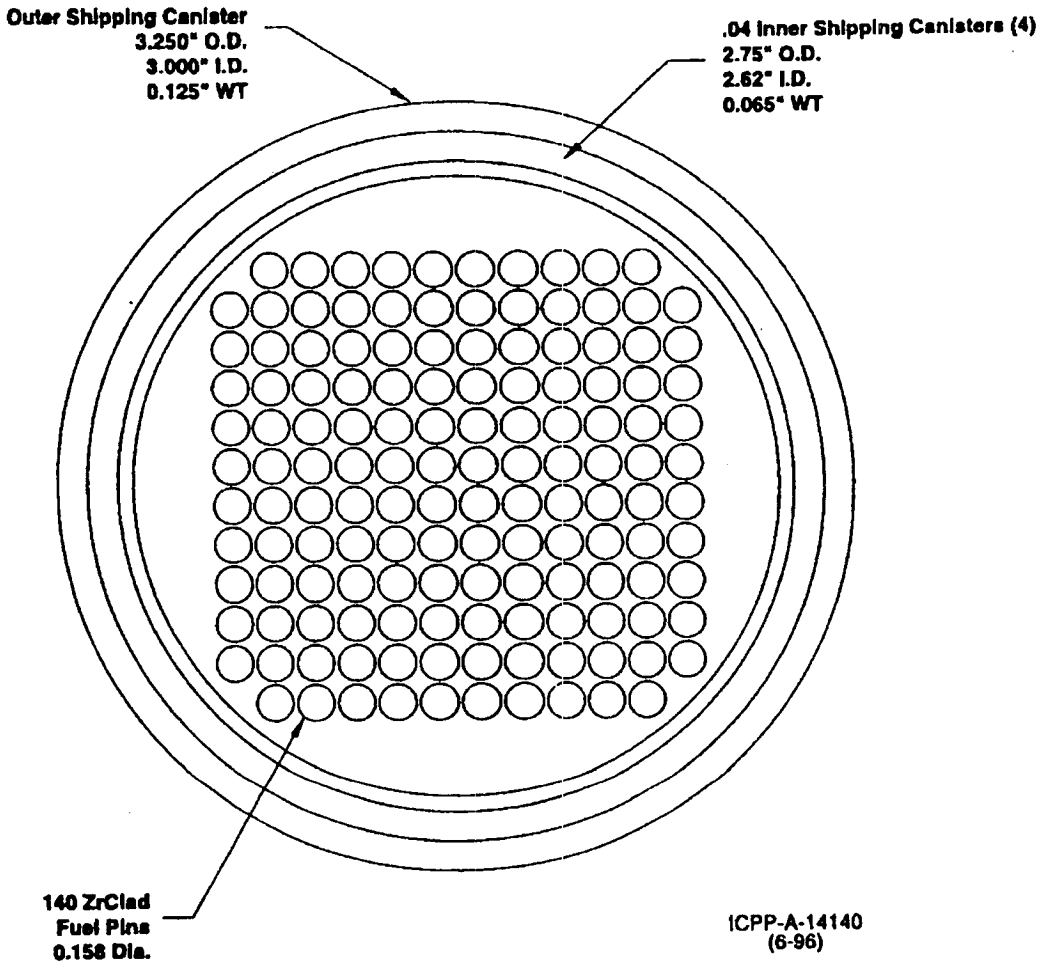

Top View of FERMI Fuel Shipping Canister Loading
for Clad Pins (140 pins)

Figure 21. Fermi pins inside existing cans.

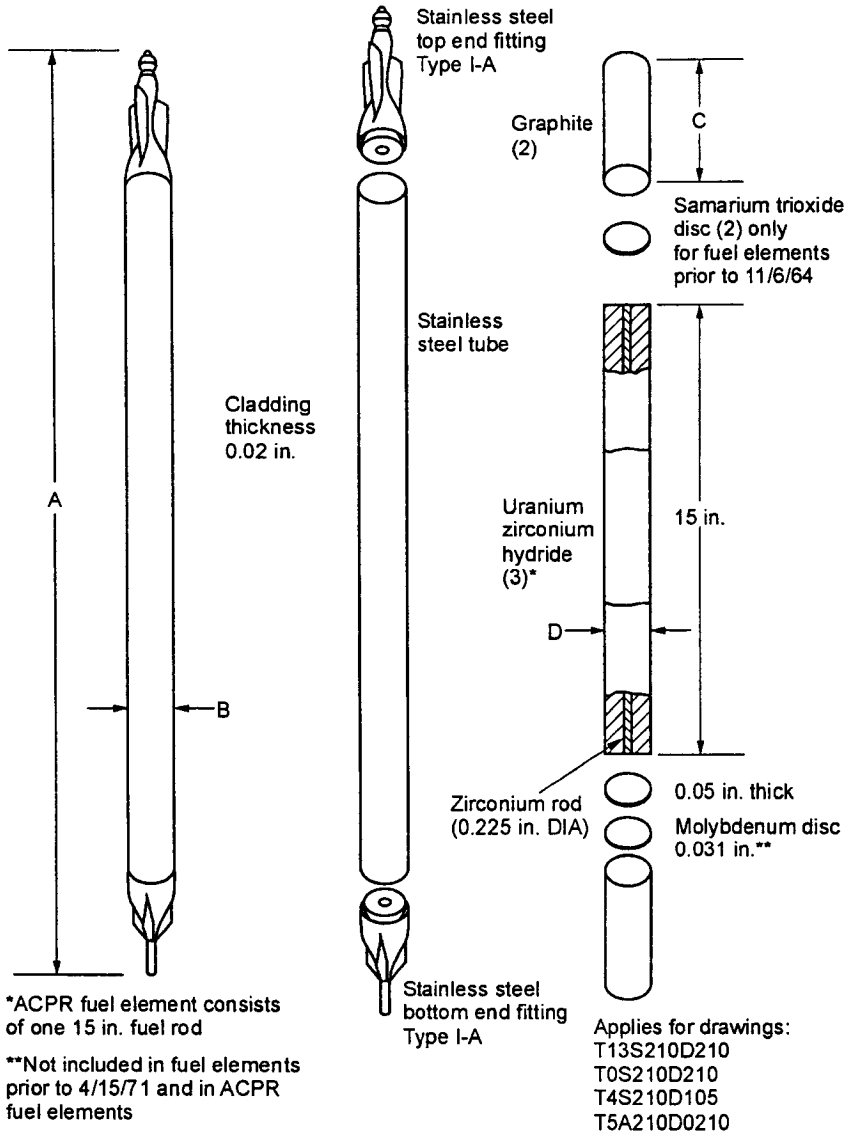

Drawing No.	TRIGA Fuel Type	Fitting Type	A (in.)	B (in.)	C (in.)	D (in.)
T13S210D210	Standard-streamline	I-A	29.68	1.478	2.56[a]	1.435
T0S210D210	Standard-plain	II-A	28.9	1.478	3.42	1.435
T4S210D105	4 rod cluster	III-A	29.88	1.414	3.42	1.37
T5A210D0210	ACPR	IV-A	28.89	1.478	3.45	1.40

(a) Lower graphite is longer than upper graphite. Lower graphite = 3.72 in.

03-GA50165-01

Figure 22. TRIGA fuel element configurations.

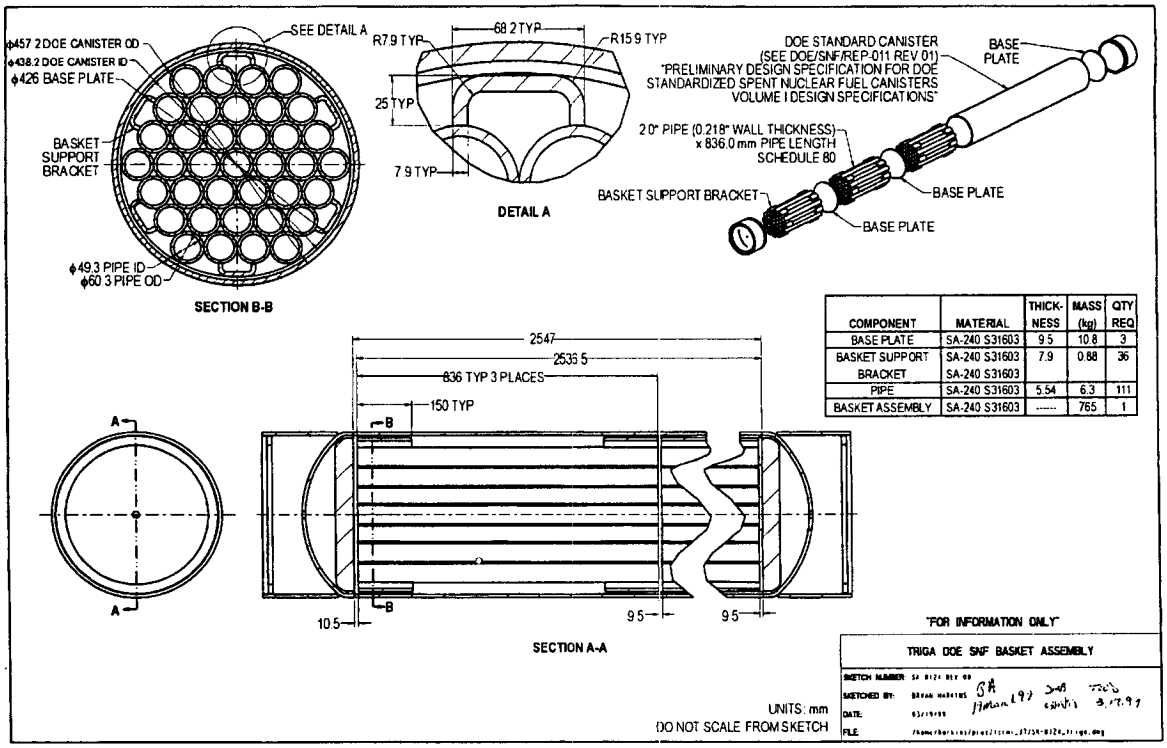

COMPONENT	MATERIAL	THICK-NESS	MASS (kg)	QTY REQ
BASE PLATE	SA-240 S31603	9.5	10.8	3
BASKET SUPPORT BRACKET	SA-240 S31603 SA-240 S31603	7.9	0.88	36
PIPE	SA-240 S31603	5.54	6.3	111
BASKET ASSEMBLY	SA-240 S31603	------	765	1

Figure 23. Conceptual canister for TRIGA fuels.

configuration is underway to evaluate the adequacy of the design because it deviates significantly from the baseline fuel design. At present, there is no identified need to poison the TRIGA standard fuel, so any needed poisoning for this fuel with its 20% enrichment remains to be determined.

A privatization contractor has proposed 54 standard pins per layer in two layers (108 total) as opposed to 37 pins in each of three layers (111 total). Current 3 × 37 analysis with TRIGA-FLIP fuel can deal with any combination of FLIP and standard fuel. The proposed (privatized) standard pin loading uses a minimalist poisoning scheme. An accidental misload of even one TRIGA-FLIP fuel in the privatized design basically invalidates the privatized analysis because it would cause a fissile increase above the approved, fissile load limit for that particular canister configuration. The privatized analysis will have to address the potential for an unintentional misload of a small number of FLIP fuels in each package.

4.6 HEU Oxide (Shippingport PWR)

The Shippingport PWR fuel (Figure 24) serves as the baseline fuel for this criticality category because of its enrichment (93.15% BOL), the fissile mass per FHU (18.174 kg ^{235}U), and its physical size. Criticality analysis calculated a value that indicated the fuel could be disposed of safely without poisoning. However, this unpoisoned approach is contingent on the maintenance of the fuel geometry for this fuel.

Because of their size, many of the other fuels in this category end up in baskets other than the one proposed (Type 6 basket) for this particular fuel. As an example, fuel in this particular category that might use a Type 1a basket with poisoning (Al_x category) would rely on a baseline comparison to the ATR fuels. Such an approach would allow the analyst to justify acceptance based on a degradation and homogenization of perhaps a less durable fuel.

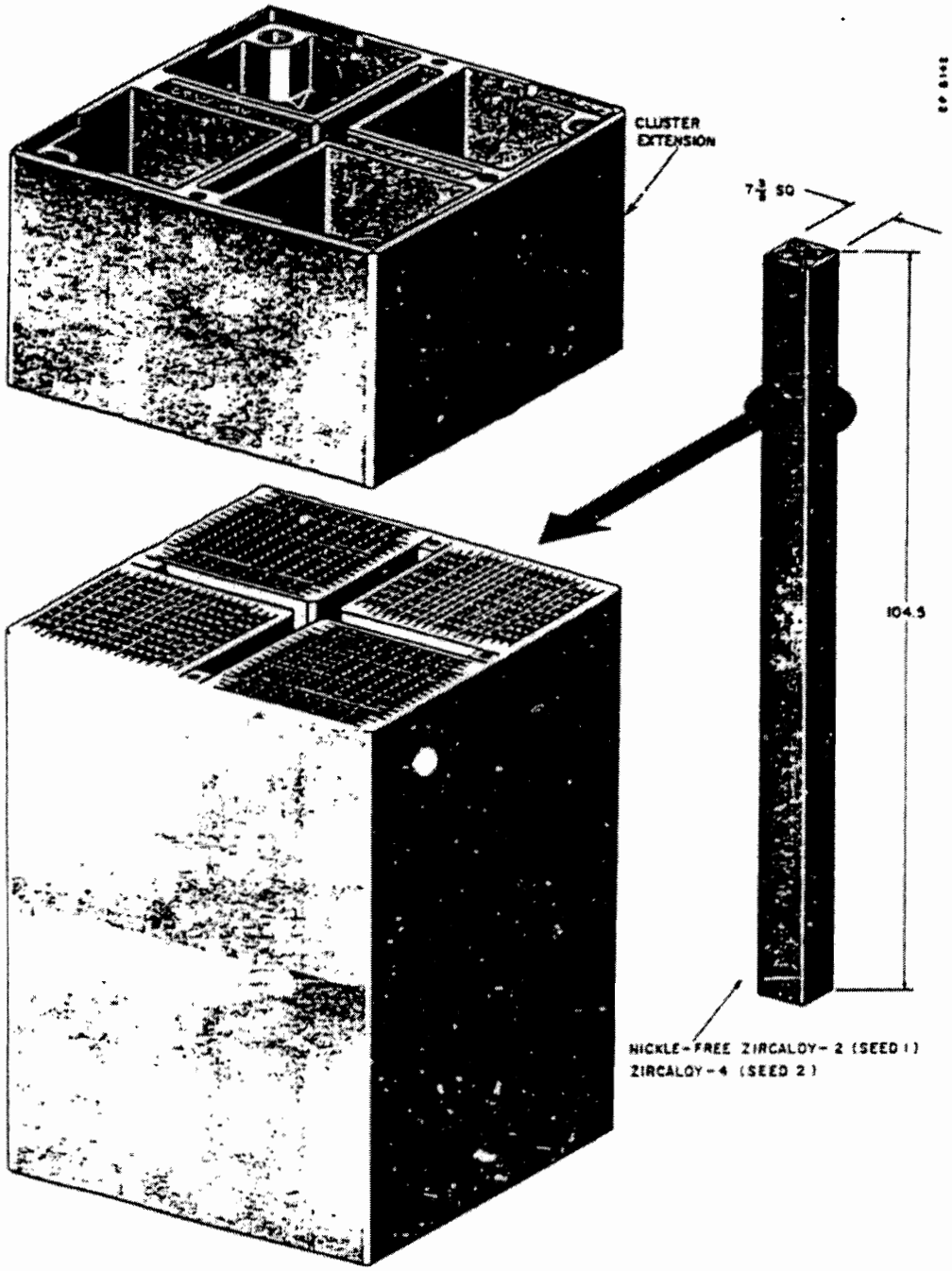

Figure 24. Seed fuel cluster with cruciform control rod channel.

4.6.1 HFIR (outer)

Fuel for the HFIR reactor suggests addressing its configuration specifically in this report because of (1) the physical size and (2) the quantity of these fuels predicted by the year 2035. While not truly an aluminum-based fuel, it is a HEU oxide fuel with aluminum cladding. Whether included in the aluminum fuel or HEU oxide category, a special consideration needs to be given to this fuel because of its physical diameter (see Figure 25). The HFIR outer assembly is unique in its construction through the use of an annular design. The physical size of the outer assembly dictates its disposal inside a 24-in. canister. Criticality analysis (see Reference 14) for the combination of annular construction and the void fraction inside both the fuel assembly and inside a 24-in. canister indicated the need for some degree of poisoning/moderator exclusion for the degraded case analysis.

4.6.2 HFIR (inner)

An inner assembly contains fissile material. When the inner assembly moves up and down inside the outer assembly, it controls the criticality in the reactor. Its physical size can be accommodated in an 18-in. canister, but a criticality analysis is still needed. Projections based on stacking these assemblies three high inside a Type 6a basket would yield a canister fissile load of 5.53 kg ^{235}U. Instituting a poisoning requirement for such a configuration would still have to be demonstrated with a detailed analysis for at least the intact and flooded condition.

4.7 U/Th Oxide (Shippingport LWBR)

The Shippingport LWBR fuel (Figure 26) consists of a number of individual assemblies (see Reference 20). The assemblies of interest include the seed assemblies (12), power flattening blankets (three types; quantity of 12), and reflectors. The seed and power flattening blankets are the items of interest from a disposal standpoint because of the quantity of fissile material in each assembly.

The seed assemblies will fit within a standard 18-in., 15-ft canister but not without some form of poisoning. The concern with the seed assemblies is a degradation scenario that might promote a radial redistribution of the pins from the hexagonal assembly to the void space within the proposed basket compartment.

The power flattening blankets (three types) have a physical size approaching 23-in. and a fissile loading >26 kg ^{233}U. Based on an ongoing analysis, the power flattening blankets require a combination of both constraints to avoid fuel pin expansion into the center of the assembly and the outer periphery inside the canister, and poisoning to remain below the critical limit. The alternative to this particular fuel is derodding the pins for installation in an 18-in. canister with better controls on fissile loading and predictability on fissile material distributions within a degraded environment.

4.8 U/Th Carbide (Ft. St. Vrain)

The U/Th group consists mainly of fuels that used a mixture of ^{235}U for fissions and ^{232}Th for incidental production of ^{233}U. Both Ft. St. Vrain (see Figure 27) and Peach Bottom (see Figure 28) fuels were based on heavy metal carbide granules coated with differing layers of pyrolytic graphite (and silicon carbide in the case of Ft. St. Vrain fuel). Both reactors used various graphite designs to provide structure to hold the granules in a matrix. Combined, both Peach Bottom and Ft. St. Vrain fuels represent 99.64% of the MTHM contained in the carbide fuel category. There is one FFTF fuel assembly and a small number of FFTF pins (103 total) where the fuel matrix is composed of a Pu/U carbide in metal cladding. Because of the dissimilarity between these carbide fuels and the other fuels in Group 8, the commonality

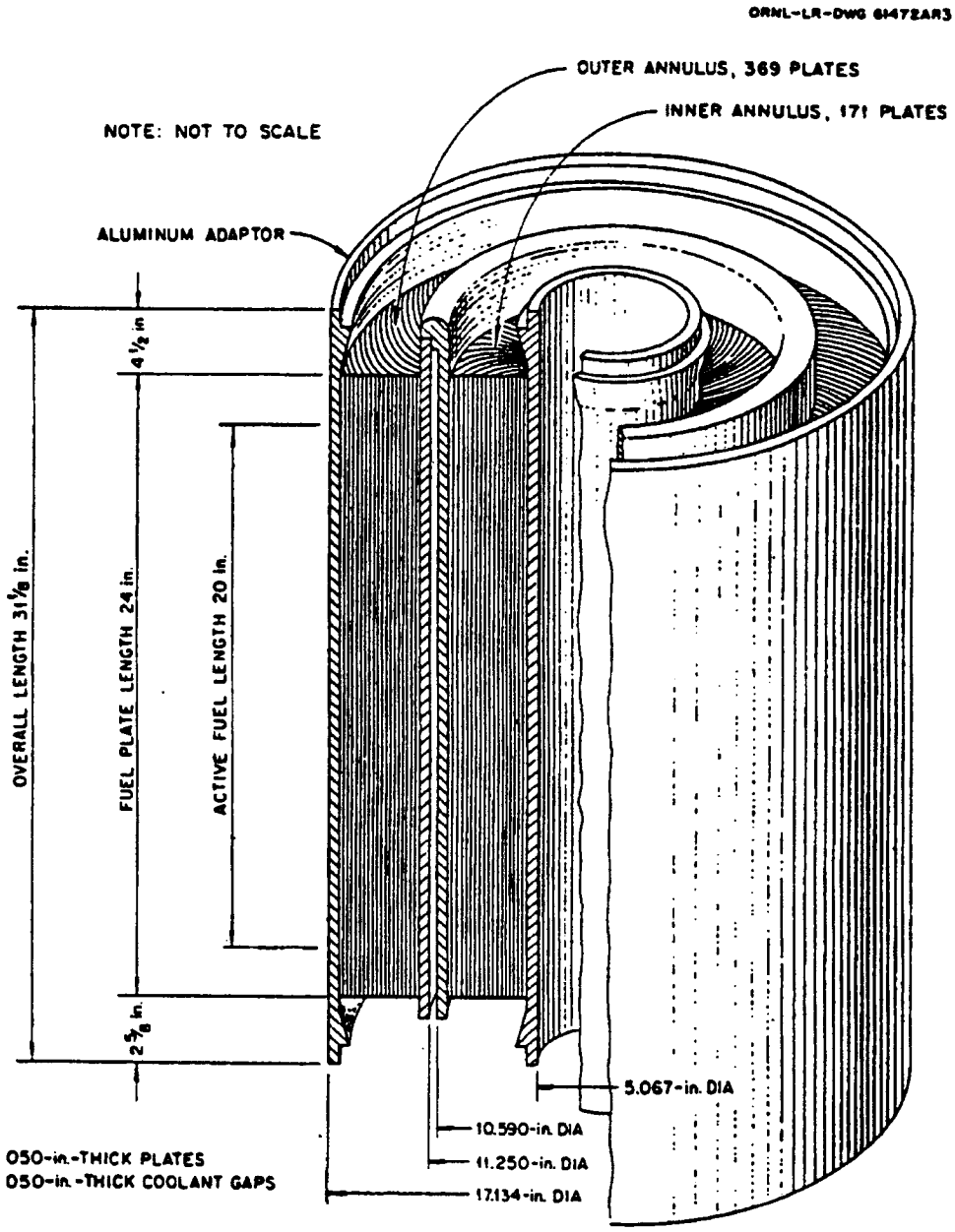

High Flux Isotope Reactor fuel element. Source: HFIR 1982.

Figure 25. HFIR inner and outer assemblies (combined).

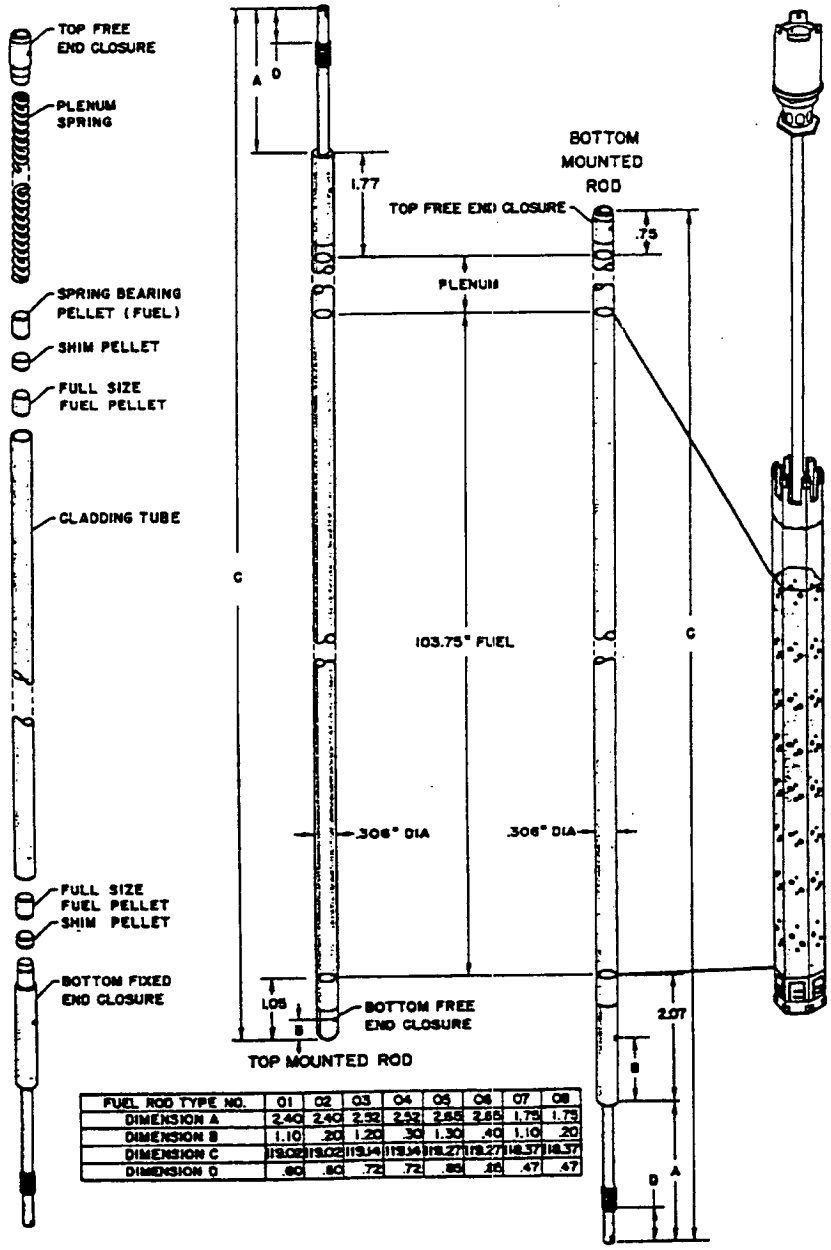

FUEL ROD TYPE NO.	01	02	03	04	05	06	07	08
DIMENSION A	2.40	2.40	2.52	2.52	2.65	2.65	1.75	1.75
DIMENSION B	1.10	.20	1.20	.30	1.30	.40	1.10	.20
DIMENSION C	119.02	119.02	119.14	119.14	118.27	118.27	118.37	118.37
DIMENSION D	.60	.60	.72	.72	.85	.85	.47	.47

Figure 26. LWBR seed assembly and individual rods.

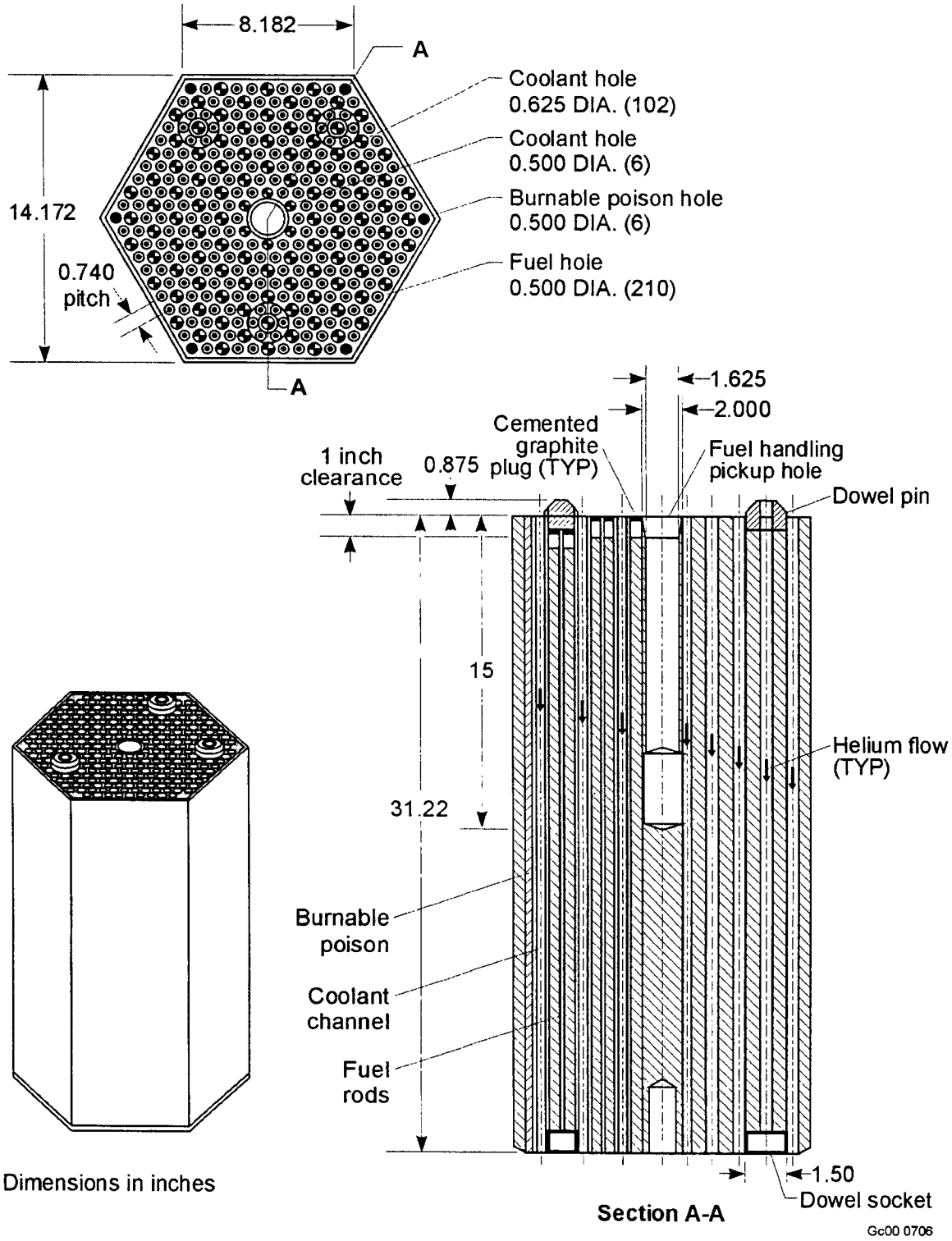

Figure 27. Typical Ft. St. Vrain fuel block.

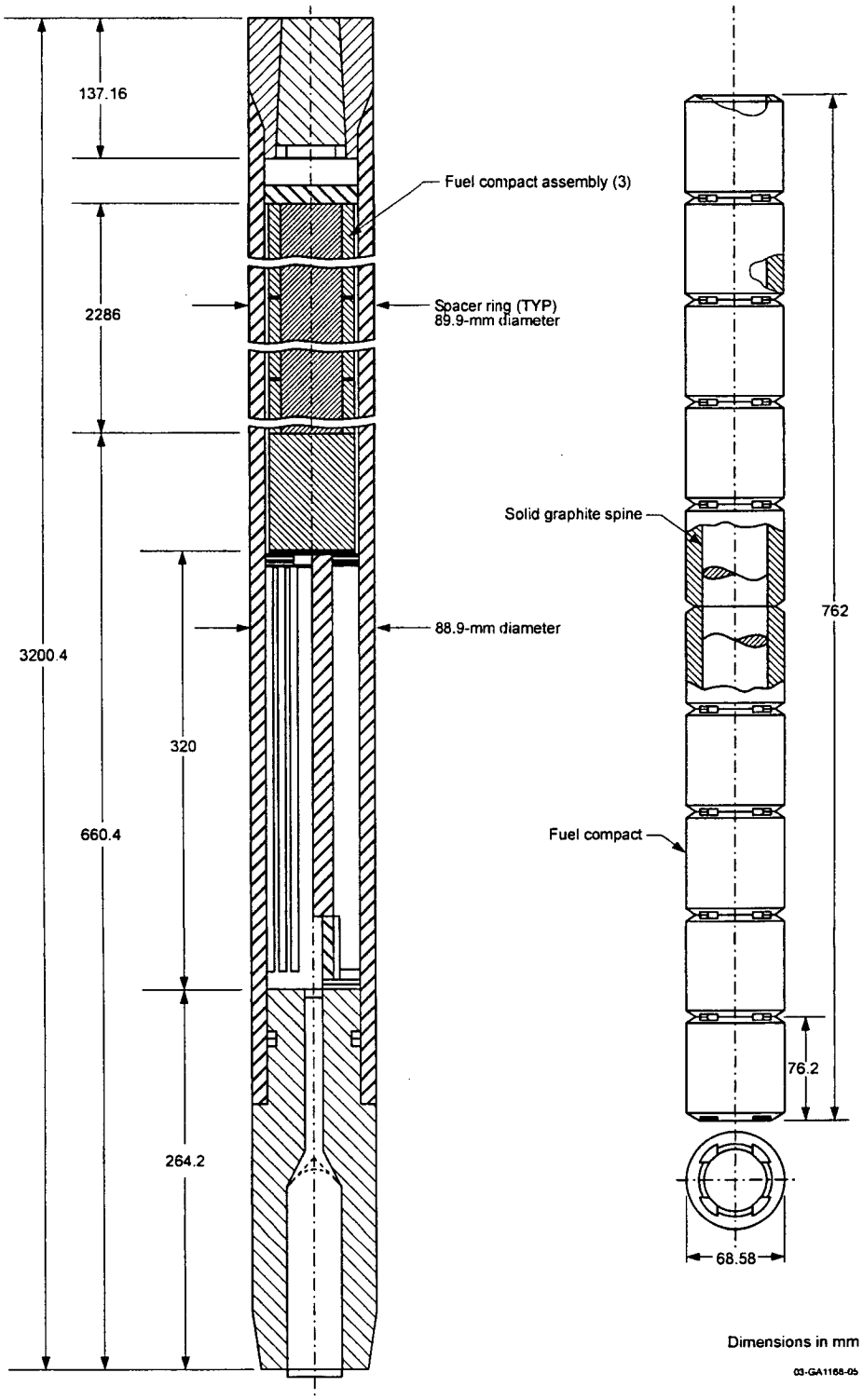

Figure 28. Typical Peach Bottom Core 2 element.

with the FFTF MOX fuels and their planned packaging, and the minimal amount as a fraction of either the Group 8 carbides or Group 3 MOX fuels, these fuels will be packaged as MOX fuels.

Within the graphite/carbide fuel category, there is a calculated displacement of moderator by the inert materials that make up the bulk of the fuel assemblies. The graphite used to make the structure holding the fissile matrix is inert (not subject to degradation other than by combustion) but also porous to moisture. The graphite can also act as a moderator such as was demonstrated by its use in the plutonium production reactors; however, this degree of moderation is dwarfed when the fuels are flooded with water.

Critical limit for these carbide fuels has adopted a slightly more stringent calculated k_{eff} of 0.92 because of fewer benchmarks available for ^{233}U as opposed to 0.93 for ^{235}U. For the Ft. St. Vrain fuel, there was an allowance for a slight ingrowth of ^{233}U that was assumed to offset any depletion (through burnup) of ^{235}U. The quantity of added ^{233}U is more than offset by the assumption of 1,485 g ^{235}U per Ft. St. Vrain block (maximum) when the average BOL fissile composition per Ft. St. Vrain block is 575 g ^{235}U and a maximum reported value of 1,256.6 g.[23] Such a maximum fissile loading for Ft. St. Vrain fuel, when coupled with moderator introduction into a breached SNF canister, provides for a more optimally moderated system for the Ft. St. Vrain blocks. In other words, the calculated linear fissile loading for an average canister is only 30% of the baseline analysis, and the H/X ratio is some 300–400% greater (overmoderated) than analyzed. For the baseline Ft. St. Vrain configuration, no poison was needed to remain below the imposed critical limit.

Fissile material loading in the Peach Bottom fuel in a standard canister is much less than Ft. St. Vrain on both a per element basis (291 g for Core 1 assemblies and 249.6 g for Core 2) and for a loaded canister basis for 10 fuel elements per canister. A privatization contract for DOE SNF fuel packaging has proposed a loading of 10 Peach Bottom elements in a standard 15-ft canister. This would result in a maximum fissile loading on a per canister basis of ~3 kg ^{235}U, which is much less than the 7.425 kg ^{235}U associated with Ft. St. Vrain fuel in a 15-ft canister. Calculated estimates of near-optimal moderation for the Ft. St. Vrain fuel without the need for poisons appear to justify a similar nonpoisoned approach for Peach Bottom fuel. Furthermore, using a 10-position storage basket for Peach Bottom fuel promotes a significant increase in void space within the canister. When completely filled with water, this leads to an overmoderated case some 400% greater than that experienced with the Ft. St. Vrain canister fissile load when flooded. An optimally moderated criticality analysis of the Peach Bottom fuel would be based on both less moderator and fissile material. Such a combination represents a fissile atom-density that is less than the 35% of that for Ft. St. Vrain in a 15-ft canister.

While a Type 1a-1 basket can be used for these particular fuels, there is neither an indicated need nor expectation that poisoning of the basket is required to maintain the calculated k_{eff} below the critical limit.

4.9 LEU Oxide (TMI-2)

This category of fuel is defined as basically commercial fuel (Figure 29) that for one reason or another was placed in storage away from the originating reactor. As part of the totals, there is an expected disposition path of bare fuels as commercial nuclear fuel assemblies (68.299 MTHM), TMI-2 debris canisters in a defined basket design (81.768 MTHM), and other fuels for packaging in either HICs or as bare elements in an other type basket (22.97 MTHM).

As a general simplification, intact fuel assemblies used an assumed 50% void fraction when calculating void space for water inclusion that was used to calculate the H/X ratio. Individual rods or pins were assigned a void fraction of 2%. If at some future time the configuration might get changed to a pin

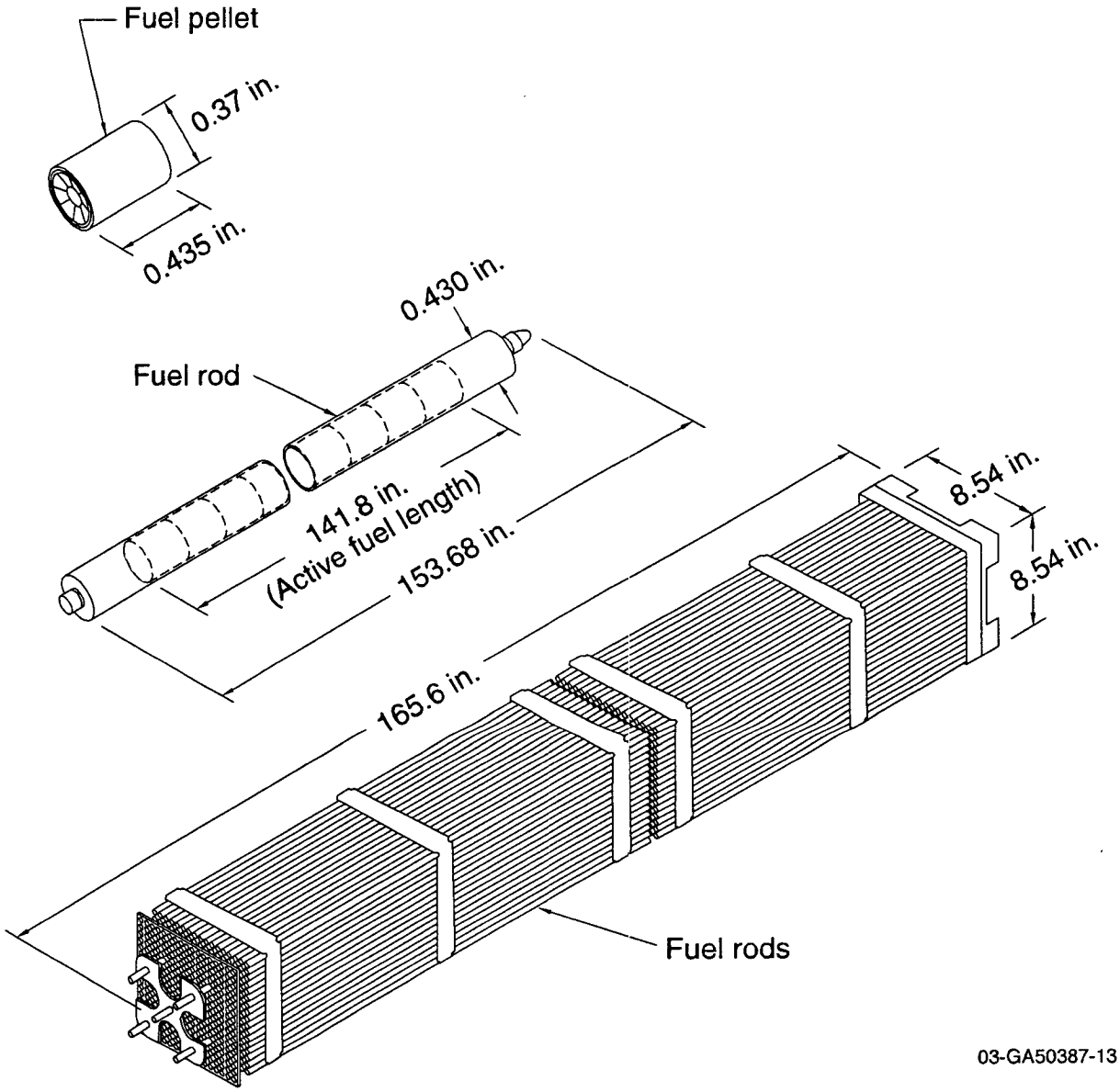

Figure 29. Typical commercial PWR assembly.

load into a HIC, it would be possible to model the HIC as an intact assembly and then calculate a void fraction for the HIC.

Critical limits for the fuel shipped as bare assemblies for packaging at the repository should be governed by the values assigned to commercial nuclear fuel packages at the repository. While low-enriched fuels (<5%) are assumed to have more supportive benchmarks, any use of noncommercial basket designs suggests application of the same critical limit value (k_{eff} <0.93) used for DOE fuels.

Fuel associated with the TMI-2 debris canisters is contained in one of three types of canisters (see Figure 30). At the time of the TMI-2 core cleanup, debris removed from the reactor ended up mainly in either the fuel (D designator) or knockout (K designator) canisters. The most heavily loaded canister from a fissile standpoint (10.06 kg ^{235}U) was one of the fuel canisters. However, the available void volume inside that canister design was more constrained than for the knockout canister. Because the contents of the canisters consisted of debris, the analysis modeled individual fuel pellets rather than zirconium clad pins. Furthermore, the criticality analysis used the equivalent of a 3.00% enriched PWR assembly with 13.72 kg ^{235}U (BOL) to account for any inbred ^{239}Pu. Such a loading represented a fissile loading that was ~36% in excess of the maximum reported fissile load for any canister.

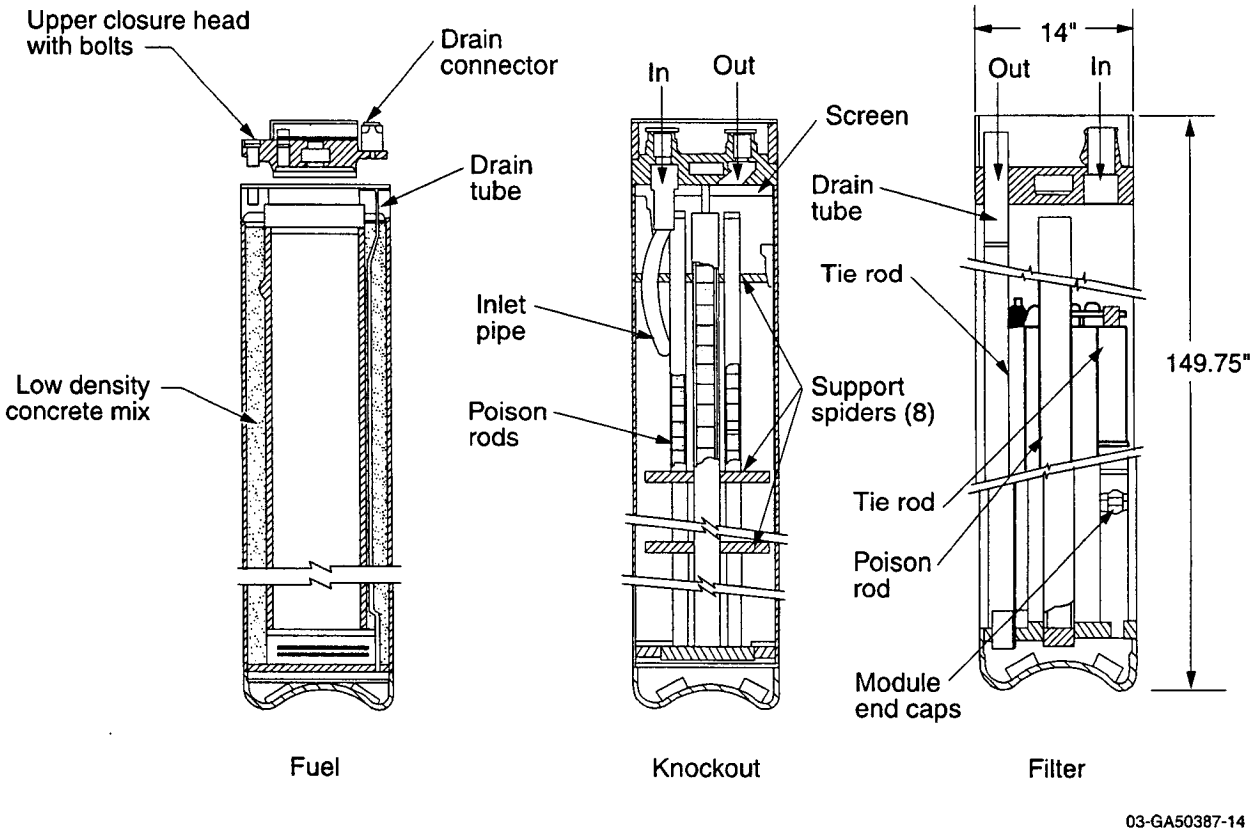

Figure 30. TMI-2 canister sketches.

4.10 HIC

Many of the fuels in the DOE inventory consist of postirradiation examination materials, metallographic mounts, and irradiated targets that do not justify an individual standard canister for single or a very small number of items. The NSNFP developed a concept of a HIC to contain the small parts and pieces maintained in the fuel inventory. Use of HICs to dispose of such items does not have a high priority in terms of further development, but the following information presents a general strategy for employing this approach to small quantities of disrupted fissile material. There is no current, approved HIC design, so individual loadings can only be speculative at this time.

Modeling a HIC would examine the contents of the HIC for a calculated maximum reactivity based on the fissile load and an assumed distribution of fissile material within the HIC. In the case of MEU or HEU materials, the most reactive condition is generally modeled as a homogeneous distribution. Fissile loads composed of LEU material are generally modeled as heterogeneous mixtures. In either case, the goal is to identify a generic HIC fissile loading which when placed into a yet-to-be-qualified canister basket, can be loaded without consideration of adding neutron poisons.

Installation of HICs into a standard canister will require development of both sizes (length and diameter) and allowable (generic) fissile loads based on criticality analyses. The diameter of the HIC will define the basket dimensions in the standard canister. The goal of any criticality analysis will treat the loaded HIC as an intact fuel assembly with an assumed void fraction internal to the HIC. The analysis will then determine what maximum linear fissile load per HIC and for the SDC (multiple HICs in an array) can be allowed without having to poison the SDC internals. Ideally, the HICs will be standardized with respect to diameter but will be allowed length differences to facilitate loading or stacking within the usable length of the SDCs (256.5 cm or 414.02 cm). There are currently no expectations of HIC designs to accommodate loading in anything other than a conventional 18-in. SDC with an appropriate basket.

4.11 Hybrid Fuel Loadings

The intention of this report was never to identify a detailed canister count for all fuels other than the fuels identified and analyzed in the baseline fuels. To do so would be overly prescriptive in terms of trying to optimize SDC loads without considering operational constraints. Those operational constraints may include issues relative to fuel availability, storage versus packaging location, and certification issues as to fuel identification or confirmation of composition.

There are three types of hybrid packaging that might occur. Hybrid fuel packaging within a criticality group is very likely. Assembling hybrid fuel packages with fuels from two or more criticality groups may be possible. And a third form of hybrid packaging would allow the use of a qualified basket from the aluminum group for graphite fuel packaging.

Partial or fractional basket loads can be rounded up to the next whole integer canister. Ideally, the spreadsheet identifies the various parameters needed to minimize criticality risk. These parameters (total fissile, enrichment, linear fissile loading, and H/X ratio) can be quantified to provide comparisons to other fuels in a given group for that basket design. Then these combined or hybrid fuel loads may be used to determine a possible maximum FHU count. Partial canister loads (without any hybrid mixing of fuels) can be used to identify partial fills of a basket. These can be rounded up to the next integer SDC value and added for a maximum total canister count within a category and across categories for the entire DOE SNF inventory identified for repository disposal.

5. FISSILE MATERIAL CALCULATIONS

Fissile loads for the various fuels encompass three significant fissile isotopes, i.e., ^{233}U, ^{235}U, and ^{239}Pu. Enrichments of the various fuels range from depleted to 100% in the case of ^{233}U.

5.1 Fissile per FHU

All fissile material loads for the various FHUs would use a BOL value with a specified enrichment. In some identified cases, the baseline fuels analyses used fissile loads in excess of BOL to account for potential ingrowth of added fissile (^{233}U in Shippingport LWBR and Ft. St. Vrain) or decay of $^{239}Pu \rightarrow {}^{235}U$ and $^{240}Pu \rightarrow {}^{236}U$ in FFTF fuels.

Calculated values for individual FHUs are meaningful only for those fuels with physical dimensions that limit them to a single FHU per canister (Shippingport PWR) or when they are stacked in a single column, e.g., Ft. St. Vrain or HFIR fuels. Calculated values for fissile concentrations, such as linear loading in g/cm or atom-densities (atoms/b-cm), offer a measure for comparing other fuels within a given canister/basket combination.

As a caveat, the reader should understand that the fissile concentrations per canister are based on a published or specified fissile loading per FHU. Such information provides a basis for operating a nuclear reactor safely.

Curie quantities of fissile species that are found in the source term inventory report[24] provide radionuclide inventories found in the source term templates created from ORIGEN runs and stored as templates in the SNF database. The gram quantities of fissile materials associated with criticality analyses are not expected to agree explicitly with the source term values, because in most cases fissile concentrations were maximized or boosted to ensure a conservative approach in the analysis.

5.2 Fissile per Canister

A more realistic calculation for linear loading is based on the internal, usable length inside the canister, which is divided into the total fissile mass. This is particularly important where the fuels are small enough to allow side-by-side installation in what is essentially a fuel array created by the basket positions. Such an analysis also accounts for the more distributed character of the fissile material within the canister. Whether reporting the fissile mass in terms of linear loading (g/cm) or as an atom-density (atom/b-cm), the calculation again provides a basis for comparison to acceptability against the baseline fuel/basket combination.

5.3 Beginning-of-Life Versus End-of-Life

It has always been the position of the NSNFP to claim no credit for burnup for any of the DOE fuels. While other documents might refer to burnup values of DOE fuels (see Reference 24), those discussions relate only to establishment of curie (or source term) inventories for fission products. For the baseline fuels analyzed in each criticality category, specific gram quantities of fissile material are used rather than derived curie values used in the construction of burnup templates.

Much of the DOE fuel inventory consists of 90+% enriched materials, so little in-breeding of other fissile isotopes can occur during reactor operation. As with any test or demonstration program, there were specialized fuels intended to promote breeding of other fissile species. Specifically, the Ft. St. Vrain fuel was intended to demonstrate a $^{232}Th/^{233}U$ fuel cycle. The mechanism used to demonstrate this concept

employed a binary particle system with both ^{233}Th carbide (fertile) and ^{235}U carbide (fissile) particles. The fissile uranium provided the fissionable mass, and the thorium would convert to ^{233}U by neutron absorption while in the reactor. Ft. St. Vrain fuel block specifications indicated a baseline range of fissile loadings, ranging from 131.4 to 1,256.61 g ^{235}U per block (see Reference 23). The criticality analysis ended up using 1,485 g ^{235}U per block; only 7 of 2,208 Ft. St. Vrain blocks have a fissile loading approaching this value.

5.4 Poisons

The need for neutron absorbing poisons has been identified for a select number of fuels within the DOE inventory. The analyses demonstrated a need for some type of poison for some canisters based on the proposed fissile load in a canister/basket combination and a degree of degradation and radial redistribution of the fissile material within the canister.

Early analyses identified the need to not only include a poison, but also provide a mechanism to install and retain the poison. Analysis dismissed boron as a poison because of its solubility and an inability to ensure retention through the expected degradation inside a breached SDC. The chosen poison evolved to a gadolinium phosphate because of its apparent insolubility (ensuring its retention). However, the properties of the $GdPO_4$ compound were essentially unknown; a mechanism to install the poison was problematic.

The NSNFP undertook development of a method to incorporate the poison in a package with some degree of retention. This effort resulted in the development of a now ASTM-qualified alloy (see Reference 15), consisting of a high-nickel C-4 alloy with 2% gadolinium incorporated in the metal matrix for fuel basket construction. Yet even this loading does not ensure the necessary poison concentration for all degraded cases.

A supplemental addition of poisons may be required in some cases through the use of poisoned bead material that has yet to be developed. The development of this poisoned bead material has yet to be formed in terms of an underlying substrate or how it can be reasonably installed within a remote or hot cell environment.

The gadolinium poison turns out to be very effective in a totally thermal (fully flooded) regime. Criticality analyses, which indicated a need for gadolinium poisoning, were all the result of degraded fuels and the associated reconfiguration of fissile material that might occur inside a breached waste package. Gadolinium poisoning is not a property of all packages due to a combination of either lower fissile atom-densities or an inability to reconfigure fissile material upon degradation. The ratio of gadolinium/fissile atoms within a defined geometry can offer a comparison for all other fuels in a poisoned basket against the baseline fuel for that intended basket.

6. CONCLUSIONS AND RECOMMENDATIONS

Use of proposed baskets has identified an approach to packaging DOE SNF in standardized canisters for a number of baseline fuels within the nine identified criticality categories based on the fuel matrix.

With very few exceptions, all other fuels within the inventory that would employ any of the proposed basket designs generate fissile loads per canister that are less than the values reported in the baseline analyses. The outgrowth of these lower fissile loads, sometimes because of lower gram quantities or reduced enrichments, generally translates into decreases in parameters that contribute to minimized criticality risk, i.e., lower atom-densities, lower linear loadings per canister. In other cases, the canister may become significantly overmoderated, or the poison/fissile atom ratios are multiples to orders-of-magnitude increases of those needed to minimize criticality risk.

Several of the baseline fuels require poisoning to minimize criticality risk for the degraded conditions postulated in the event of an SDC breach in postclosure. Any poisoning requirement occurs only for the degraded-case conditions for a select number of fuels. Application of a defined critical limit for DOE fuels has generally applied a value of calculated $k_{eff}<0.93$ at least for the postclosure (10,000 years). There is some expectation that these critical limits would be relaxed for the postclosure. Yet all poisoning requirements are based on preclosure limits in spite of the fact that the degraded conditions were found to occur only beyond the stipulated 10,000-year lifetime of the repository. The fuels and their packaging configurations that required poisoning were:

- Aluminum—poison in the basket plates only
- MOX—poison in the basket plates; poisoned beads desirable
- TRIGA—poison in the basket plates only
- Fermi—poison in the basket tubes and poisoned beads
- HEU oxide—poison beads needed for HFIR outer assemblies
- U/Th oxide—poison beads needed.

Use of poisons is predicated on the breach of any waste package containing DOE fuels and a subsequent breach of the SDC with the introduction of moderation. Credit has been taken for retention of at least a portion of the gadolinium either as an insoluble material, such as gadolinium phosphate ($GdPO_4$), or being tied up in a corrosion resistant C-4 + Gd plate material. However for some fuels, basket plates alone will not provide the necessary distribution of gadolinium within the degraded package. Use of beads provides some degree of distribution in interstitial spaces where fuel plates or pins contain significant quantities of fissile material. Identification of a specific bead form (material composition, density, size, weight percent poison) will require development in the upcoming years prior to actual packaging of those fuels requiring beads.

There are several types of fuels in the criticality groupings that require no poisoning inside a standard canister. Certainly any fuels using the same packaging configuration with a lesser fissile loading and associated decreased fissile atom-densities should be considered as bounded by the baseline fuel. Calculated H/X ratios would have to be evaluated on a case-by-case basis to determine whether this ratio is moving toward or away from optimal moderation compared to the baseline fuel. This approach should allow for the acceptance of these similar packages with nothing more than a criticality analysis conducted

at the time of packaging to verify that calculated k_{eff} for intact dry and flooded conditions for the SDC are less than those found for the baseline fuel under similar conditions. Such an extrapolation avoids the need for a costly degradation analysis for each SDC load configuration.

The other subset of fuels to be considered for SDC packaging requires some degree or form of poisoning. These baseline fuels bound the proposed fissile loadings. All other fuels using a poisoned basket/bead combination certainly need to be analyzed for the intact condition, both dry and wet. Yet for the same degree of poisoning in a given basket, but with a lowered fissile atom-density, a criticality analysis might be limited to the intact conditions at the time of loading and a demonstration of a calculated k_{eff} that is less than the baseline fuel.

In cases across all fuel categories for criticality, use of poisoned baskets for one fuel group should be considered adequate for other fuels outside the original group. This is true if: (1) the criticality calculations for the intact analyses (both dry and flooded) demonstrate a lowered k_{eff} when compared to the baseline fuel used as a basis for that particular poisoned basket design and (2) both the fissile atom-densities are lower and the Gd/X ratios are higher. Ultimately, while it may save money by having both poisoned and unpoisoned baskets of the same design, adoption of such an approach is fraught with many shortcomings. The greatest concern would be the possibility of misloading a canister and nonpoisoned basket with a single fuel handling unit that causes the fissile loading to exceed the basis fuel load.

A primary example of such an event would be the analysis of an unpoisoned basket for TRIGA standard fuel (total fissile: 4.33 kg ^{235}U) and then inserting a TRIGA-FLIP fuel in just one of the 111 basket positions within an SDC. Conversely, the risk of using a completely unpoisoned basket for intentionally loading TRIGA-FLIP fuels completely invalidates any previous analysis (total fissile: 15.20 kg ^{235}U). Ideally, if all TRIGA baskets were poisoned to the same degree, TRIGA fuel of the same length could go in any TRIGA basket design for that length regardless of the fissile loading in the FHU. It could even prove advantageous to blend TRIGA-FLIP with TRIGA standard fuels in the canister as this would result in a derated fuel loading when compared against the TRIGA-FLIP baseline analysis. Such a loading strategy would also guard against any concern regarding the inevitability of a misloading at the time of fuel loading in a basket/canister.

6.1 Future Activities

There are several future activities that need to be accomplished in support of packaging DOE fuel in standard canisters. First and foremost is completion of information needed to calculate either the type of basket need or fissile concentrations of some of the fuel. The need for this information is reflected with the TBD values interspersed throughout the Appendix A spreadsheets.

In addition, given the selection of a basket and a poisoning scheme, it would be possible to start formulating hybrid packaging both within a given criticality category, but also blending fuels across categories. This blending of fuel units could occur where cross-section and length are similar enough to use the same basket. In retrospect, the blending of fuels needs to be proven acceptable. All previous degradation analyses that solubilized the fissile material did so regardless of the fuel matrix that in turn was the basis for the initial segregation of DOE fuels in the nine categories.

Adoption of the goal to promote hybrid fuel packaging would require development of a templated basket design in an MCNP. Subsequent analysis of various fuel combinations, at least intact fuel conditions, could then examine the net effect on basket/canister reactivity by mixing and matching fuels among the various basket compartments. One underlying concern is the effect single, more highly loaded

FHU might have on calculated reactivity. For the intact condition, this reactivity effect would be relatively easy to calculate. A possible shortcoming of any proposed hybrid fuel loading must examine whether a single FHU with a lower fissile mass (but with a higher atom-density per FHU volume, or substantially different degradation properties because of cladding differences) might not contribute to an expected, lower reactivity. Development of the template model needs to address the methodology to evaluate the contribution or relationship in reactivity differences between fuel types in a basket/canister environment.

Quantities of gadolinium alloy material which is needed to provide poisoned baskets and beads can be projected from canister count estimates and the type of basket needed to accommodate fuel packaging. In addition, canister estimates can be identified by site if fuel storage locations are added to the information present in Appendix A. This information can further be used to segregate canister counts for facility sizing and timing required to establish queuing canisters and support deliveries of standard canisters to the repository.

Acceptance of the conceptual basket designs and the proposed approach to packaging fuels can be used to support detailed basket designs and the remote handling operations needed to support loading fuels in the various canisters and baskets. Detailed design of baskets will allow mockup and remote trials for fuel loading in baskets and develop remote operations with stacked-basket installation.

Appendix A of this report itemizes the information by fuel type and then by basket size to examine hybrid fuel packages within a group and across groups for fuels with common basket design requirements. This could provide added impetus to suggest use of a standard approach for those fuels using poisoned basket designs and thereby avoid any misloading of fissile content, i.e., if a baseline fuel were to be mixed into a nonpoisoned basket loading.

7. BIBLIOGRAPHY

The following list provides the reader with a listing of documents generated to develop proposed packaging criteria specific to nine fuel types that constitute the criticality group. The resultant criticality analyses cover what are considered baseline fuels that bound the fuels within the DOE inventory. The resultant analyses in most cases cover not only criticality analyses, but also address thermal issues, finite element analyses of the loaded canister, and radiation shielding concerns.

Aluminum Fuels

Evaluation of Codisposal Viability for Aluminum Clad DOE-Owned Spent Fuel: Phase I Intact Codisposal Canister, BBA000000-01717-5705-00011, Rev 00, June 1997.

Evaluation of Codisposal Viability for Aluminum Clad DOE-Owned Spent Fuel: Phase II Degraded Codisposal Waste Package Internal Criticality, BBA000000-01717-5705-00017, Rev 00, April 1998.

Evaluation of Codisposal Viability for Melt and Dilute DOE-Owned Fuel, TDR-EDC-NU-000006, Rev. 00, July 2001.

U-metal Fuels

Evaluation of Codisposal Viability for U-Metal (N Reactor) DOE-Owned Fuel, TDR-EDC-NU-000004, Rev. 00, January 2001.

Intact and Degraded Component Criticality Calculations of N Reactor (U Metal) Spent Nuclear Fuel, CAL-EDC-NU-000003, Rev. 00, URN-0797.

N Reactor (U-metal) Fuel Characteristics for Disposal Criticality Analysis, DOE/SNF/REP-056, Rev. 0, May 2000.

MOX Fuels

Criticality Calculation for the Most Reactive Degraded Configuration of the FFTF SNF Codisposal WP Containing an Intact Ident-69 Container, CAL-DSD-NU-000002, Rev A, August 2002.

Evaluation of Codisposal Viability for MOX (FFTF) DOE-Owned Fuel, BBA000000-01717-5705-00023, Rev. 00, September 1999.

Fast Flux Test Facility (FFTF) Reactor Fuel Criticality Calculations, BBA-000000-11717-210-00016, Rev. 00, MOL.19990426.0142.

Fast Flux Test Facility (FFTF) Reactor Fuel Criticality Calculation: Degraded SNF Canister, BBA-000000-11717-210-00033, Rev. 00, MOL.19990426.0239.

Fast Flux Test Facility (FFTF) Reactor Fuel Degraded Criticality Calculations: Intact SNF Canister, BBA-000000-11717-210-00051, Rev. 00, MOL.19990607.0075.

FFTF (MOX) Fuel Characteristics for Disposal Criticality Analysis, DOE/SNF/REP-032, Rev. 01, June 2002.

U-Zr/U-Mo Fuels

Enrico Fermi Fast Reactor Spent Nuclear Fuel Criticality Calculations: Degraded Mode, CAL-EDU-NU-000001, Rev. 00, MOL.20000802.0002.

Enrico Fermi Fast Reactor Spent Nuclear Fuel Criticality Calculations: Intact Mode, BBA000000-01717-210-00037, Rev. 00, MOL.19990125.0079.

Evaluation of Codisposal Viability for U-Zr/U-Mo Alloy (Enrico Fermi) DOE-Owned Fuel, TDR-EDC-NU-000002, Rev. 00, August 2000.

Fermi (U-Mo) Fuel Characteristics for Disposal Criticality Analysis, DOE/SNF/REP-035, Rev. 0, February 1999.

$UZrH_x$ Fuels

Criticality Safety Evaluation for a "Dropped" SNF Canister Containing Self-Moderated Fuels, EDF-023, April 2003.

Evaluation of Codisposal Viability for UZrH (TRIGA) DOE-Owned Fuel, TDR-EDC-NU-000001, Rev. 00, January 2000.

TRIGA Fuel Phase I and II Criticality Calculation, CAL-MGR-NU-000001, Rev.00, MOL.19991209.0195.

TRIGA (UZrH) Fuel Characteristics for Disposal Criticality Analysis, DOE/SNF/REP-048, Rev. 0, June 1999.

HEU Oxide Fuels

Evaluation of Codisposal Viability for HEU Oxide (Shippingport PWR) DOE-Owned Fuel, TDR-EDC-NU-000003, Rev. 00, February 2000.

Intact and Degraded Criticality Calculations for the Codisposal of Shippingport PWR Fuel in a Waste Package, CAL-EDC-NU-000002, Rev. 00, MOL.20000209.0233.

Shippingport PWR (HEU Oxide) Fuel Characteristics for Disposal Criticality Analysis, DOE/SNF/REP-040, Rev. 0, April 1999.

U-Th Oxide Fuels

Evaluation of Codisposal Viability for Th/U Oxide (Shippingport LWBR) DOE-Owned Fuel, TDR-EDC-NU-000005, Rev. 00, September 2000.

Intact and Degraded Criticality Calculations for the Codisposal of Shippingport LWBR Fuel in a Waste Package, CAL-EDC-NU-000004, Rev. 00, URN-0582.

Shippingport LWBR (Th/U Oxide) Fuel Characteristics for Disposal Criticality Analysis, DOE/SNF/REP-051, Rev. 0, 1999.

Th/U Carbide Fuels

Evaluation of Codisposal Viability for Th/U Carbide (Fort Saint Vrain HTGR DOE-Owned Fuel, TDR-EDC-NU-000007, Rev. 00, September 2001.

Fort Saint Vrain HTGR (Th/U carbide) Fuel Characteristics for Disposal Criticality Analysis, DOE/SNF/REP-060, Rev. 0, January 2001.

Intact and Degraded Mode Criticality Calculations of Fort Saint Vrain Spent Nuclear Fuel in a Waste Package, CAL-EDC-NU-000007, Rev. 00, URN-0937.

LEU Oxide Fuels

Intact and Degraded Mode Criticality Calculations for the Codisposal of TMI-2 Spent Nuclear Fuel in a Waste Package, CAL-DSD-NU-000004, Rev. 00, September 2003.

TMI Fuel Characteristics for Disposal Criticality Analysis, DOE/SNF/REP-084, Rev. 0, September 2003.

8. REFERENCES

1 *Disposal Criticality Analysis Methodology Topical Report Rev. 02,* YMP/TR-004Q. November 2003.

2. *Fast Flux Test Facility (FFTF) Reactor Fuel Criticality Calculations*, BBA-000000-11717-210-00016, Rev. 00, MOL.19990426.0142.

3. *Criticality Calculation for the Most Reactive Degraded Configuration of the FFTF SNF Codisposal WP Containing an Intact Ident-69 Container,* CAL-DSD-NU-000002, Rev A, August 2002.

4. N. L. Pruvost, and H. C. Paxton, Nuclear Criticality Safety Guide, LA-12808, UC-714, September 1996.

5. J. R. Lamarsh, *Introduction to Nuclear Reactor Theory*, Addison-Wesley Publishing, Reading, Massachusetts, September 1972.

6. *Performance Assessment of the Direct Disposal in Unsaturated Tuff of Spent Nuclear Fuel and High-Level Waste Owned by U.S. Department of Energy, Volume 2: Methodology and Results,* SAND94-2563 * UC-900, Sandia National Laboratories, March 1995

7. *Intact and Degraded Criticality Calculations for the Codisposal of Shippingport LWBR Fuel in a Waste Package*, CAL-EDC-NU-000004, Rev. 00, URN-0582.

8. *Evaluation of Codisposal Viability for UZrH (TRIGA) DOE-Owned Fuel*, TDR-EDC-NU-000001, Rev. 00, January 2000.

9. *Intact and Degraded Component Criticality Calculations of N Reactor (U Metal) Spent Nuclear Fuel*, CAL-EDC-NU-000003, Rev. 00, URN-0797.

10. *Criticality Safety Evaluation for a "Dropped" SNF Canister Containing Self-Moderated Fuels*, INEEL, EDF-023, April 2003.

11. *N Reactor (U-metal) Fuel Characteristics for Disposal Criticality Analysis*, DOE/SNF/REP-056, Rev. 0, May 2000.

12. *Intact and Degraded Mode Criticality Calculations for the Codisposal of TMI-2 Spent Nuclear Fuel in a Waste Package*, CAL-DSD-MU-000004, Rev. 00, September 2003.

13. *Preliminary Design Specification for Department of Energy Standardized Spent Nuclear Fuel Canisters: Volume I – Design Specification*, DOE/SNF/REP-011, Rev. 3, August 1999.

14. *Analysis of Alternative Waste Forms: Phase 2 Report*, TDR-CRW-MD-000004, Rev. 00, August 2003.

15. *TMI Fuel Characteristics for Disposal Criticality Analysis*, DOE/SNF/REP-084, Rev. 0, September 2003.

16. *Standard Specification for Low-Carbon Nickel-Chromium-Molybdenum-Gadolinium Alloy Plate, Sheet, Strip,* Designation: B 932 – 04, ASTM International, West Conshohocken, Pennsylvania, 2004.

17. *Interim Report on the Corrosion Performance of a Neutron Absorbing Ni-Cr-Mo-Gd Alloy,* DOE/SNF/REP-086, March 2004.

18. *Evaluation of Codisposal Viability for Aluminum Clad DOE-Owned Spent Fuel: Phase II Intact Degraded Codisposal Waste Package Internal Criticality,* BBA000000-01717-5705-00017, Rev. 00, April 1998.

19. *Fast Flux Test Facility (FFTF) Reactor Fuel Degraded Criticality Calculations: Intact SNF Canister*, BBA-000000-11717-210-00051, Rev. 00, MOL. 19990607.0075

20. *Enrico Fermi Fast Reactor Spent Nuclear Fuel Criticality Calculations Intact Mode*, BBA000000-01717-210-00037, Rev. 00, MOL.19990125.0079.

21. *Fuel Summary Report: Shippingport Light Water Breeder Reactor,* INEEL/EXT-98-00799, Rev. 1, January 1999.

22. *Evaluation of Codisposal Viability for Aluminum Clad DOE-Owned Spent Fuel: Phase I Intact Codisposal Canister*, BBA000000-01717-5705-00011, Rev 00, June 1997.

23. *Fort Saint Vrain HTGR (Th/U carbide) Fuel Characteristics for Disposal Criticality Analysis*, DOE/SNF/REP-060, Rev. 0, January 2001.

24. *Source Term Estimates for DOE Spent Nuclear Fuels; Volumes I, II, & III*, DOE/SNF/REP-078, Rev. 1, January 2004.

Appendix A

Proposed Fissile Loading for Standard Disposal Canisters (Nine Fuel Groups)

Appendix A

Proposed Fissile Loading for Standard Disposal Canisters (Nine Fuel Groups)

The type of fuel for each criticality fuel group segregates the following tables in this appendix. In each table found in this appendix is a condensation of the tabular information and calculations used to determine linear loadings, canister basket selection, H/X ratios, etc. The full spreadsheet with all the attendant fields, formulas/calculations, notations, and generic reference information is included in the CD, which is attached to this report.

Information from Version 5.0.1 of the National Spent Fuel Database (NSFDB) was used to populate the fields that were needed to support any subsequent calculations. Generally, this information from the database included basic properties of the fuels such as fissile/fuel handling unit (FHU), enrichments, isotope species, total uranium, FHU count, and dimensional FHU information. While only the summary sheets for each fuel in the nine criticality categories are presented in the following index, the full spreadsheet for each fuel category can be found in the attached CD. Table A-1 is a listing of the corresponding spreadsheets found on the attached CD. The summary spreadsheets are a condensed (hidden columns) version of the full spreadsheets.

Several items of this information are worth noting. The full table lists both beginning-of-life (BOL) fissile where known, and end-of-life (EOL) as a fixed, known value that should agree with reported NMMISS (Nuclear Materials Management Information Safeguards & Security) data. Criticality analysis for DOE fuel always uses BOL (as a minimum), or BOL + conservatism for calculations that used in-breed fissile material (adding ^{233}U to Ft. St. Vrain BOL ^{235}U is a primary example). There are no plans to claim credit for any of the burnup in the Ft. St. Vrain fuels.

Table A-1. Worksheet listing.

Full Worksheet	Summary Worksheet	Notes
1-UAlx	Alum sum	
2-U metal	Umetal sum	
3-MOX	MOX sum	
4-UZr-UMo	UMo sum	
5-UZrHx	UZrHx sum	
6-HEU oxide	HEUox sum	
7-U-Th oxide	UTHox sum	
8-U-Th carbide	Carbide sum	
9-LEU oxide	LEUox sum	
Other Worksheets		
Concentrate		H/X ratio conversions
Canister #		Summary of # of canisters generated
MTHM summary		MTHM and volumes by crit category
Baskets		Appendix C tabular information

The geometric shape reported in this spreadsheet may differ from the reported callout in the database. Whether reported as a pin, rod, or cylinder is of no particular significance other than knowing the cross-section dimension when selecting a basket in which to position the FHU. An example is the identification of each Fermi fuel pin as a distinct FHU. The individual pins are stored in cans (140 pins in each) that were associated with each derodded assembly. The assumption made for packaging in the standard SNF canister for the repository used the existing storage cans for insertion into the canister basket. This packaging approach may change depending on the ability to confirm the absence of water in all these cans at the time of packaging.

Those parameters considered important to establishing fuel packaging within a canister, i.e., linear loading, enrichment of fissile species, total fissile mass per canister, and H/X ratio, are calculated in this spreadsheet. None of these parameters are absolutes, but offer packaging guidance in terms of reference values for which other fuels can be compared. Linear loading was calculated by distribution of the fissile mass over the usable length inside the SNF canister, e.g., 101 in. for the standard canister that was 18 in. in diameter and 10 ft long. Such an assumption tends to artificially spread or distribute the fissile material within any loaded canister because no single element or stacked combination of elements takes up exactly 101 inches. Enrichment of the fissile species in the baseline fuels is a fixed value and usually the highest within a criticality group; this approach allows a relative comparison between other fuels in each group when need.

Determination of the void volume of the individual FHUs was an estimate based on whether there were plate or pin arrays in a fuel assembly; in that case, a void fraction of 50% was applied. In the case of solid bodies such as TRIGA fuel pins, an allowance of 2% void space was applied. Basket displacement volumes were calculated based on plate or tube dimensions. These displaced volumes were used to calculate the void space within an SNF canister for each type fuel specific to the basket used for that fuel for the volume between the impact plates inside the canister.

Reference documents listed at the bottom of each worksheet were not used so much for reference as to list bibliographic information that contains materials relating to graphite/carbide fuels. These reference documents contain fuel information in details much greater than that available in the NSFDB. Additional criticality analyses for other fuels in this group may further support the baseline analyses.

There are several abbreviations used to fill in certain cells. In some cases, data are either not reported or not available from the database. In particular, one of the most important pieces of missing data is dimensional information on many of the single items thought to be scraps, postirradiation examination samples, metallurgical mounts, or test items. The absence of this data is not a reflection on the database itself. It is a reflection of the lack of importance placed on documenting such information at the time of transfer to storage because record keeping at this level of detail was considered nonessential given that a disposal path was never considered.

The following abbreviations and symbols are used in the tables.

"- - -"—information not reported or contained in the SNF database, or information that is not necessarily pertinent to the calculations.

NR—not reported (or not available); this is generally a value that is needed to determine a fissile loading or aid in basket selection before qualification of packaging can proceed.

TBD—to be determined; values that are calculated from the NR information (see above).

The tabular information contained in Tables A-2 Through A-10 can be used to generate a summary of the various size canisters (Table A-1) by fuel category based on information currently available. This canister count represents an expected maximum based on the facts (1) there was no canister consolidation attempted, so integer canister counts were rounded up for any partial basket, and (2) the number of yet to be determined canisters is small because the identified FHUs are generally scrap or remnants pieces with low counts.

Table A-2. Canister count summary.

		18-in.		24-in.				
Fuel Category	Fuel Type	10-ft	15-ft	10-ft	15-ft	MCO		
Alum	1	1226	1	---	---			
Metal	2	16	4	---	---	440		
MOX	3	5	61	---	---	---		
Fermi	4	14	19	---	---	---		
TRIGA	5	165[a]	---	---	---	---		
HEU oxide	6	489	42	166[b]	---	---		
U/Th oxide	7	20	12	---[c]	61	---		
U/Th carbide	8	---	605	---	---	---		
LEU oxide	9	8	344	---	---	---		
	Subtotals	1943	1088	166	61	440	3698	←total

a. Does not reflect TRIGA fuel consolidation; could be as few as 72.

b. HFIR outer elements.

c. Dresden and LWBR power flattening blanket.

Table A-3. UAl_x fuel category.

Fuel Category: UAl_x	MTHM	Fissile type	BOL enrich (nd0)	FHU count	Basket design	FHUs per canister (max)	Linear loading	% of baseline fuel	Fissile/atom-density		H/X atom ratio		Gd	Gd/X atom ratio		
Fuel Name [Fuel ID #]	metric tonnes		%	[units]	(type)	(#)	(g/cm)	(%)	(atom/b-cm) [per canister]	% of baseline fuel	moderator/ fissile atoms (per canister)	% of baseline fuel	kg (poison) per canister	poison/fissile atoms (per canister)	% of baseline fuel	Notes
Baseline Fuel																
ATR [2,6] (poisoned)	- - -	U-235	93.15	6074	Type 1a-2	20	84.6004	100	1.438E-04	100	379.3	100.00	7.21	0.4966	100	Ref. 1, 2, 6
'Other' Baseline Fuel																
MIT [3,4] (expected loading / non-poisoned)	- - -	U-235	93.50	636	Type 1b-3	30	60.1462	71.09	1.032E-04	71.79	573.8	151.3	2.88	0.2793	100	Ref. 1, 3, 4
ORR [3,4] (expected loading / non-poisoned)	- - -	U-235	20.56	831	Type 1c-3	30	40.5848	47.97	6.964E-05	48.44	575.0	151.6	- - -	- - -	- - -	Ref. 1, 3, 4
Other' Baseline Fuel																
MIT [3,4] (poisoned)	- - -	U-235	93.50	636	Type 1b-4	64	128.3119	151.67	2.202E-04	153.16	240.2	63.3	3.84	0.1746	100	Ref. 1, 3, 4
ORR [3,4] (non-poisoned)	- - -	U-235	20.56	831	Type 1c-4	40	54.1131	63.96	9.286E-05	64.59	402.1	106.0	- - -	- - -	- - -	Ref. 1, 3, 4
ANL) [5]	0.0028	U-235	93.20	13	Type 1a-1	10	5.3009	6.27	9.008E-06	6.27	3429.5	904.09	7.21	7.9260	1595.96	Ref.1
ARMF (PLATES) [8]	0.0002	U-235		15	Type 1a-3	30	1.4187	1.68	2.411E-06	1.68	13822.9	3643.98	7.21	29.6150	5963.18	Ref.1
ARMF/CFRMF MARK I [9]	0.0113	U-235		55	Type 1a-2	20	14.5057	17.15	2.465E-05	17.15	2237.5	589.85	7.21	2.8965	583.22	Ref.1
ARMF/CFRMF MARK I LL [10]	0.0002	U-235	93.22	2	Type 1a-2	20	8.5770	10.14	1.457E-05	10.14	3783.3	997.35	7.21	4.8986	986.36	Ref.1
ARMF/CFRMF MARK II [11]	0.0012	U-235		3	Type 1a-2	20	10.5853	12.49	1.795E-05	12.49	3071.3	809.65	7.21	3.9767	800.74	Ref.1
ARMF/CFRMF MARK III [12]	0.0001	U-235		4	Type 1a-2	20	1.7154	2.03	2.915E-06	2.03	18916.5	4986.74	7.21	24.4929	4931.82	Ref.1
ATR [15]	1.4777	U-235	93.15	1760	Type 1a-2	20	53.2927	62.99	9.056E-05	62.99	569.2	150.05	7.21	0.7884	158.75	Ref.1
ATR [16]	3.4896	U-235	93.15	3948	Type 1a-1	10	29.2604	34.59	4.972E-05	34.59	567.3	149.55	7.21	1.4359	289.13	Ref.1
ATSR [17]	0.0032	U-235		20	Type 1a-3	30	17.4920	20.68	2.972E-05	20.68	949.1	250.19	7.21	2.4020	483.65	Ref.1
BNL MEDICAL RX (BMRR) [21]	0.0051	U-235	92.65	40	Type 1a-3	30	13.0890	15.47	2.224E-05	15.47	2581.7	680.59	7.21	3.2100	646.35	Ref.1
GTRR [87]	0.0045	U-235		25	Type 1a-3	30	18.8781	22.31	3.208E-05	22.31	1785.2	470.61	7.21	2.2256	448.14	Ref.1
GENTR [97]	0.0040	U-235		15	Type 1a-4	40	35.9118	42.45	6.102E-05	42.45	465.7	122.78	7.21	1.1700	235.58	Ref.1
JMTR (JAPAN) [123]	0.0372	U-235		152	Type 1a-2	20	16.9257	20.01	2.876E-05	20.01	2039.1	537.55	7.21	2.4823	499.83	Ref.1
MIT [135]	0.1875	U-235	93.13	451	Type 1a-3	30	40.5244	47.90	6.886E-05	47.90	902.5	237.91	7.21	1.0368	208.76	Ref.1
MIT [136]	0.0430	U-235		120	Type 1a-3	30	36.0681	42.63	6.129E-05	42.63	1014.0	267.31	7.21	1.1649	234.56	Ref.1
MURR (COLUMBIA) [142]	0.0217	U-235		32	Type 1a-2	20	46.3076	54.74	7.869E-05	54.74	721.1	190.10	7.21	0.9073	182.69	Ref.1
MURR (COLUMBIA) [143]	0.2131	U-235	93.14	312	Type 1a-2	20	46.3950	54.84	7.884E-05	54.84	723.5	190.72	7.21	0.9056	182.35	Ref.1
MURR (COLUMBIA) [144]	0.6897	U-235	93.26	953	Type 7	8	20.2946	23.99	3.449E-05	23.99	1417.8	373.77	TBD	TBD	TBD	Ref.1
UMRR (ROLLA) [146]	0.0265	U-235	19.75	28	Type 1a-2	20	14.5029	17.14	2.464E-05	17.14	2309.0	608.71	7.21	2.8970	583.33	Ref.1
OHIO STATE [157]	0.0034	U-235		24	Type 1a-3	30	15.4951	18.32	2.633E-05	18.32	2172.3	572.67	7.21	2.7115	545.98	Ref.1
OHIO STATE [158]	0.0262	U-235		30	Type 1a-2	20	13.4339	15.88	2.283E-05	15.88	2537.8	669.01	7.21	3.1276	629.75	Ref.1
ORR [165]	0.0833	U-235		52	Type 1a-3	30	30.5016	36.05	5.183E-05	36.05	1148.8	302.86	7.21	1.3775	277.36	Ref.1
PURDUE UNIVERSITY [177]	0.0022	U-235		124	Type 1a-2	20	1.2865	1.52	2.186E-06	1.52	30527.1	8047.52	7.21	32.6573	6575.76	Ref.1
PURDUE UNIVERSITY [178]	0.0182	U-235		15	Type 1a-2	20	16.8351	19.90	2.861E-05	19.90	2057.1	542.28	7.21	2.4957	502.52	Ref.1
RHF (FRANCE) [179]	0.0255	U-235	92.97	4	Type 6b	2	40.6590	48.06	6.909E-05	48.06	313.9	82.74	TBD	TBD	TBD	Ref.1
RINSC [180]	0.0085	U-235		70	Type 1a-3	30	12.8603	15.20	2.185E-05	15.20	2628.7	692.98	7.21	3.2671	657.84	Ref.1
RINSC [181]	0.0605	U-235		44	Type 1a-2	20	20.2426	23.93	3.440E-05	23.93	1647.1	434.21	7.21	2.0756	417.93	Ref.1
UNIV OF FLORIDA (ARGONAUT) [272]	0.0041	U-235		259	Type 1a-3	30	1.7201	2.03	2.923E-06	2.03	20468.7	5395.94	7.21	24.4259	4918.33	Ref.1
UNIV OF FLORIDA (ARGONAUT) [273]	0.0010	U-235		14	Type 1a-3	30	1.6502	1.95	2.804E-06	1.95	21335.7	5624.49	7.21	25.4605	5126.64	Ref.1
UNIV OF MASS-LOWELL [274]	0.0045	U-235		34	Type 1a-3	30	14.3481	16.96	2.438E-05	16.96	2349.9	619.49	7.21	2.9263	589.63	Ref.1
UNIV OF MASS-LOWELL [275]	0.0143	U-235		41	Type 1a-3	30	8.0550	9.52	1.369E-05	9.52	4185.9	1103.47	7.21	5.2160	1050.28	Ref.1
UNIV OF MICHIGAN [276]	0.0899	U-235		130	Type 1a-2	20	7.3236	8.66	1.244E-05	8.66	4623.2	1218.77	7.21	5.7369	1155.17	Ref.1
UNIV OF MICHIGAN [277]	0.1741	U-235		225	Type 1a-2	20	9.5250	11.26	1.619E-05	11.26	3496.6	921.76	7.21	4.4110	888.19	Ref.1
UNIV OF VIRGINIA [279]	0.0069	U-235		44	Type 1a-2	20	10.7520	12.71	1.827E-05	12.71	3140.2	827.82	7.21	3.9077	786.83	Ref.1
WORCESTER POLY INSTITUTE [287]	0.0228	U-235		26	Type 1a-3	30	20.2339	23.92	3.438E-05	23.92	1703.9	449.18	7.21	2.0765	418.11	Ref.1
FRR MTR-C (JAPAN) [289]	0.0086	U-235		17	Type 1a-2	20	6.6323	7.84	1.127E-05	7.84	5149.9	1357.60	7.21	6.3350	1275.59	Ref.1
FRR PIN CLUSTER (SO. KOREA)	0.0521	U-235		48	TBD	TBD	TBD	TBD	TBD	TBD	TBD	TBD	TBD	TBD	TBD	Ref.1
FRR MTR (CANADA)	0.0022	U-235		14	TBD	TBD	TBD	TBD	TBD	TBD	TBD	TBD	TBD	TBD	TBD	Ref.1

Table A-3. (continued).

Fuel Category: UAlx	MTHM	Fissile type	BOL enrich (rpb)	FHU count	Basket design	FHUs per canister (max)	Linear loading	% of baseline fuel	Fissile/atom-density		H/X atom ratio		Gd	Gd/X atom ratio		
Fuel Name [Fuel ID #]	metric tonnes		%	[units]	(type)	(#)	(g/cm)	(%)	(atom/b-cm) [per canister]	% of baseline fuel	moderator/ fissile atoms (per canister)	% of baseline fuel	kg (poison) per canister	poison/fissile atoms (per canister)	% of baseline fuel	Notes
SLOWPOKE (CANADA)	0.0009	U-235		1	Type 6b	8	25.2361	29.83	4.288E-05	29.83	1207.3	TBD	TBD	TBD	TBD	Ref.1
FRR TUBES (DENMARK) [298]	0.1426	U-235	20.00	184	Type 1a-3	30	9.0526	10.70	1.538E-05	10.70	2765.9	729.14	7.21	4.6412	934.54	Ref.1
FRR TUBES (AUSTRALIA) [299]	0.2601	U-235		289	Type 1a-3	30	11.6959	13.82	1.987E-05	13.82	2140.8	564.36	7.21	3.5923	723.33	Ref.1
FRR TUBES (AUSTRALIA) [300]	0.0220	U-235		266	Type 1a-3	30	6.3215	7.47	1.074E-05	7.47	3960.9	1044.16	7.21	6.6464	1338.29	Ref.1
GRR (GREECE) [440]	0.0147	U-235		108	Type 1a-3	30	13.4296	15.87	2.262E-05	15.87	2591.0	683.04	7.21	3.1286	629.96	Ref.1
SAPHIR (SWITZERLAND) [443]	0.0712	U-235		39	Type 1a-2	20	17.0560	20.16	2.898E-05	20.16	1986.4	523.66	7.21	2.4634	496.02	Ref.1
SAPHIR (SWITZERLAND) [444]	0.0120	U-235		76	Type 1a-2	20	8.0705	9.54	1.371E-05	9.54	4157.8	1096.06	7.21	5.2060	1048.27	Ref.1
JRR-4 (JAPAN) [505]	0.0063	U-235		43	Type 1a-3	30	15.3624	18.16	2.610E-05	18.16	2054.4	541.59	7.21	2.7349	550.70	Ref.1
FRR MTR-S (JAPAN) [506]	0.0704	U-235		70	Type 1a-2	20	12.9357	15.29	2.198E-05	15.29	2640.4	696.06	7.21	3.2480	654.01	Ref.1
JMTR (JAPAN) [507]	1.1061	U-235		574	Type 1a-2	20	22.3782	26.45	3.803E-05	26.45	1526.3	402.36	7.21	1.8775	378.05	Ref.1
FRR MTR-S (JAPAN) [508]	0.1933	U-235		149	Type 1a-2	20	15.0643	17.81	2.560E-05	17.81	2267.3	597.70	7.21	2.7891	561.59	Ref.1
FRR MTR-C (NETHERLANDS) [509]	0.0049	U-235		7	Type 1a-2	20	4.9279	5.82	8.374E-06	5.82	6931.0	1827.15	7.21	8.5260	1716.77	Ref.1
FRR MTR-S (NETHERLANDS) [510]	0.0568	U-235		43	Type 1a-2	20	9.3567	11.06	1.590E-05	11.06	3650.3	962.30	7.21	4.4904	904.17	Ref.1
FRR MTR-C (CANADA) [512]	0.0059	U-235		8	Type 1a-2	20	6.3548	7.51	1.080E-05	7.51	5374.7	1416.88	7.21	6.6116	1331.29	Ref.1
FRR MTR-S (CANADA) [513]	0.0457	U-235		35	Type 1a-2	20	11.3060	13.36	1.921E-05	13.36	3021.0	796.39	7.21	3.7162	748.28	Ref.1
FRR ASTRA (AUSTRIA) [515]	0.0746	U-235		49	Type 1a-2	20	9.5517	11.29	1.623E-05	11.29	3549.4	935.70	7.21	4.3987	885.71	Ref.1
FRR MTR-C (GERMANY) [517]	0.0261	U-235		26	Type 1a-2	20	4.0827	4.83	6.937E-06	4.83	8366.0	2205.43	7.21	10.2912	2072.19	Ref.1
FRR MTR-S (GERMANY) [519]	0.1318	U-235		97	Type 1a-2	20	5.5236	6.53	9.386E-06	6.53	6183.5	1630.10	7.21	7.6065	1531.52	Ref.1
FRR MTR-C (SWEDEN) [523]	0.7899	U-235	20.00	480	Type 1a-2	20	11.6652	13.79	1.982E-05	13.79	2928.0	771.87	7.21	3.6018	725.24	Ref.1
FRR MTR-C2 (TURKEY) [527]	0.0123	U-235		9	Type 1a-2	20	9.6686	11.43	1.643E-05	11.43	3532.6	931.26	7.21	4.3455	875.00	Ref.1
FRR MTR-S (TURKEY) [528]	0.0591	U-235		32	Type 1a-2	20	13.0994	15.48	2.226E-05	15.48	2607.4	687.36	7.21	3.2074	645.33	Ref.1
FRR MTR-C (GREECE) [531]	0.0103	U-235		18	Type 1a-2	20	6.2339	7.37	1.059E-05	7.37	5478.9	1444.35	7.21	6.7398	1357.10	Ref.1
FRR MTR-S (GREECE) [532]	0.0677	U-235	20.00	67	Type 1a-2	20	11.2515	13.30	1.912E-05	13.30	3035.6	800.25	7.21	3.7342	751.31	Ref.1
FRR MTR-C (PORTUGAL) [540]	0.0039	U-235		9	Type 1a-2	20	5.8246	6.88	9.897E-06	6.88	6444.3	1698.83	7.21	7.2135	1452.48	Ref.1
FRR MTR-O (PORTUGAL) [541]	0.0013	U-235		3	Type 1a-2	20	6.2378	7.37	1.060E-05	7.37	6035.4	1591.06	7.21	6.7356	1356.25	Ref.1
FRR MTR-S (PORTUGAL) [542]	0.0052	U-235		6	Type 1a-2	20	10.8070	12.77	1.836E-05	12.77	3326.8	877.00	7.21	3.8878	782.33	Ref.1
IEA-R1 (BRAZIL) [545]	0.0617	U-235		84	Type 1a-2	20	10.2205	12.08	1.737E-05	12.08	3301.3	870.30	7.21	4.1109	827.75	Ref.1
FRR MTR (ARGENTINA) [547]	0.0187	U-235		30	Type 1a-2	20	9.6491	11.41	1.640E-05	11.41	3495.9	921.58	7.21	4.3543	876.77	Ref.1
FRR MTR (JAPAN) [551]	0.0175	U-235		27	Type 1a-2	20	10.0571	11.89	1.709E-05	11.89	3661.0	965.11	7.21	4.1777	841.20	Ref.1
FRR MTR-C (JAPAN) [552]	0.0846	U-235		99	Type 1a-2	20	7.4074	8.76	1.259E-05	8.76	4830.0	1273.28	7.21	5.6720	1142.11	Ref.1
FRR MTR-S (JAPAN) [553]	0.6325	U-235	20.00	476	Type 1a-2	20	11.5116	13.61	1.956E-05	13.61	2928.2	771.93	7.21	3.6498	734.31	Ref.1
ZPRL (TAIWAN) [554]	0.0233	U-235		35	Type 1a-2	20	9.4590	11.18	1.607E-05	11.18	3624.8	955.55	7.21	4.4418	894.39	Ref.1
FRR MTR (TAIWAN) [555]	0.0348	U-235		23	Type 1a-2	20	23.3918	27.65	3.975E-05	27.65	1441.8	380.09	7.21	1.7961	361.57	Ref.1
RU-1 (URAGUAY) [557]	0.0021	U-235		4	Type 1a-2	20	8.1466	9.63	1.384E-05	9.63	4255.9	1121.94	7.21	5.1574	1038.48	Ref.1
PRR-1 (PHILLIPPINES) [558]	0.0197	U-235		30	Type 1a-2	20	8.9592	10.59	1.522E-05	10.59	3710.2	978.08	7.21	4.6896	944.29	Ref.1
FRR MTR (VENEZUELA) [559]	0.0390	U-235	20.00	64	Type 1a-2	20	7.9288	9.37	1.347E-05	9.37	4642.4	1223.82	7.21	5.2990	1066.99	Ref.1
FRR MTR (JAPAN) [565]	0.0215	U-235		30	Type 1a-2	20	25.1600	29.74	4.275E-05	29.74	1322.5	348.63	7.21	1.6699	336.25	Ref.1
ASTRA (AUSTRIA) [566]	0.0028	U-235	44.44	5	Type 1a-3	30	14.2211	16.81	2.417E-05	16.81	2314.7	610.20	7.21	2.9544	594.89	Ref.1
ENEA SALUGGIA (ITALY) [574]	0.0172	U-235		116	Type 1a-3	30	14.9386	17.66	2.538E-05	17.66	2224.3	586.36	7.21	2.8125	566.32	Ref.1
FMRB (GERMANY) [577]	0.0117	U-235		92	Type 1a-2	20	8.6814	10.26	1.475E-05	10.26	4378.1	1154.16	7.21	4.8397	974.50	Ref.1
FRR MTR-C (GERMANY) [579]	0.0021	U-235		33	Type 1a-2	20	4.3244	5.11	7.348E-06	5.11	7800.5	2056.35	7.21	9.7159	1956.36	Ref.1
FRR MTR-S (GERMANY) [582]	0.0001	U-235		1	Type 1a-2	20	8.8234	10.43	1.499E-05	10.43	3823.0	1007.82	7.21	4.7618	958.82	Ref.1
FRR MTR-S (GERMANY) [584]	0.0059	U-235		44	Type 1a-2	20	9.5220	11.26	1.618E-05	11.26	3542.5	933.88	7.21	4.4124	888.47	Ref.1
FRR MTR-S (GERMANY) [585]	0.0046	U-235		50	Type 1a-2	20	6.1754	7.30	1.049E-05	7.30	5462.3	1439.97	7.21	6.8036	1369.95	Ref.1

Table A-3. (continued).

Fuel Category: UAlx	MTHM	Fissile type	BOL enrich (rpd)	FHU count	Basket design	FHUs per canister (max)	Linear loading	% of baseline fuel	Fissile/atom-density		H/X atom ratio		Gd	Gd/X atom ratio		
Fuel Name (Fuel ID #)	metric tonnes		%	[units]	(type)	(#)	(g/cm)	(%)	(atom/b-cm) (per canister)	% of baseline fuel	moderator/ fissile atoms (per canister)	% of baseline fuel	kg (poison) per canister	poison/fissile atoms (per canister)	% of baseline fuel	Notes
FRR MTR-S (GERMANY) [588]	0.0003	U-235		2	Type 1a-2	20	9.0823	10.74	1.543E-05	10.74	3714.1	979.10	7.21	4.6261	931.49	Ref.1
IAN-R1 (COLUMBIA) [596]	0.0024	U-235		16	Type 1a-2	20	10.6648	12.61	1.812E-05	12.61	3530.1	930.61	7.21	3.9396	793.27	Ref.1
FRR MTR-C (JAPAN) [600]	0.0042	U-235		54	Type 1a-2	20	5.4759	6.47	9.305E-06	6.47	6875.3	1812.45	7.21	7.6728	1544.97	Ref.1
KURR (JAPAN) [601]	0.0335	U-235	93.18	240	Type 1a-3	30	14.2925	16.89	2.429E-05	16.89	2251.5	593.53	7.21	2.9397	591.92	Ref.1
FRR MTR-S (JAPAN) [602]	0.0060	U-235		40	Type 1a-2	20	10.6667	12.61	1.813E-05	12.61	3371.3	888.73	7.21	3.9389	793.13	Ref.1
FRR MTR (JAPAN) [603]	0.0036	U-235		12	Type 7	12	12.4444	14.71	2.115E-05	14.71	2006.6	528.99	TBD	TBD	TBD	Ref.1
FRR MTR (JAPAN) [605]	0.0248	U-235		81	Type 1a-2	20	22.2000	26.24	3.772E-05	26.24	1530.9	403.57	7.21	1.8926	381.08	Ref.1
JRR-2 (JAPAN) [606]	0.0052	U-235		34	Type 1a-3	30	15.2490	18.02	2.591E-05	18.02	2194.3	578.45	7.21	2.7553	554.79	Ref.1
FRR MTR-S (NETHERLANDS) [607]	0.0011	U-235		19	Type 1a-2	20	3.8986	4.61	6.625E-06	4.61	9610.9	2533.63	7.21	10.7769	2170.00	Ref.1
FRR MTR-S (NETHERLANDS) [608]	0.0067	U-235		61	Type 1a-2	20	7.4074	8.76	1.259E-05	8.76	4829.2	1273.08	7.21	5.6720	1142.11	Ref.1
FRR MTR (NETHERLANDS) [609]	0.0092	U-235		14	Type 1a-2	20	16.5137	19.52	2.806E-05	19.52	2140.5	564.27	7.21	2.5443	512.30	Ref.1
FRR MTR-C (CANADA) [612]	0.0018	U-235		23	Type 1a-2	20	5.3177	6.29	9.036E-06	6.29	6343.3	1672.22	7.21	7.9009	1590.91	Ref.1
MACMASTER (CANADA) [614]	0.0104	U-235		83	Type 1a-3	30	11.7206	13.85	1.992E-05	13.85	2804.8	739.39	7.21	3.5847	721.81	Ref.1
FRR MTR (TAIWAN) [628]	0.0048	U-235		35	Type 1a-2	20	9.8807	11.68	1.679E-05	11.68	3740.6	986.10	7.21	4.2522	856.22	Ref.1
THOR (TAIWAN) [629]	0.0041	U-235		35	Type 1a-2	20	7.9904	9.44	1.358E-05	9.44	4162.6	1097.33	7.21	5.2582	1058.78	Ref.1
FRR MTR-C (PORTUGAL) [631]	0.0009	U-235		9	Type 1a-2	20	6.8772	8.13	1.169E-05	8.13	5310.0	1399.81	7.21	6.1094	1230.16	Ref.1
FRR MTR-S (PORTUGAL) [632]	0.0039	U-235		22	Type 1a-2	20	12.3509	14.60	2.099E-05	14.60	2784.9	734.15	7.21	3.4018	684.97	Ref.1
TRR-1 (THAILAND) [633]	0.0048	U-235		31	Type 1a-2	20	10.4292	12.33	1.772E-05	12.33	3255.9	858.32	7.21	4.0286	811.19	Ref.1
RA-3 (ARGENTINA) [634]	0.0046	U-235		32	Type 1a-2	20	9.2319	10.91	1.569E-05	10.91	3641.0	959.84	7.21	4.5511	916.40	Ref.1
FRR MTR-C (ARGENTINA) [635]	0.0017	U-235		14	Type 1a-2	20	8.4055	9.94	1.428E-05	9.94	4013.1	1057.93	7.21	4.9986	1006.49	Ref.1
RA-3 (ARGENTINA) [636]	0.0301	U-235		207	Type 1a-2	20	9.2868	10.98	1.578E-05	10.98	3619.5	954.17	7.21	4.5242	910.98	Ref.1
PRR-1 (PHILIPPINES) [638]	0.0033	U-235		21	Type 1a-2	20	11.2645	13.31	1.914E-05	13.31	2950.9	777.91	7.21	3.7299	751.04	Ref.1
FRR MTR-O (TURKEY) [642]	0.0002	U-235		2	Type 1a-2	20	6.6277	7.83	1.126E-05	7.83	5399.0	1423.28	7.21	6.3393	1276.47	Ref.1
FRR MTR-C (TURKEY) [643]	0.0010	U-235		8	Type 1a-2	20	8.0702	9.54	1.371E-05	9.54	4370.9	1152.27	7.21	5.2062	1048.31	Ref.1
FRR MTR-S (TURKEY) [644]	0.0029	U-235		18	Type 1a-2	20	10.9162	12.90	1.855E-05	12.90	3122.7	823.19	7.21	3.8489	775.00	Ref.1
ASTRA (AUSTRIA) [646]	0.0044	U-235	93.07	33	Type 1a-3	30	10.3840	12.27	1.764E-05	12.27	3170.9	835.90	7.21	4.0462	814.72	Ref.1
FRR MTR (AUSTRALIA) [649]	0.0033	U-235		12	Type 1a-2	20	19.3958	22.93	3.296E-05	22.93	1761.0	464.22	7.21	2.1662	436.18	Ref.1
FRR ASTRA (AUSTRIA) [654]	0.0001	U-235		2	Type 1a-2	20	3.8986	4.61	6.625E-06	4.61	8652.3	2280.91	7.21	10.7769	2170.00	Ref.1
FRR MTR-C1 (SWITZERLAND) [656]	0.0005	U-235		7	Type 1a-2	20	4.7782	5.65	8.119E-06	5.65	7534.5	1986.23	7.21	8.7932	1770.56	Ref.1
FRR MTR-C2 (SWITZERLAND) [657]	0.0010	U-235		11	Type 1a-2	20	5.8386	6.90	9.921E-06	6.90	6041.6	1592.67	7.21	7.1961	1448.39	Ref.1
FRR MTR-S (SWITZERLAND) [658]	0.0060	U-235		55	Type 1a-2	20	6.8164	8.06	1.158E-05	8.06	4889.4	1288.95	7.21	6.1639	1241.13	Ref.1
FRR PIN CLUSTER (SO. KOREA) [659]	0.2983	U-235		158	TBD	TBD	TBD	TBD	TBD	TBD	TBD	TBD	TBD	TBD	TBD	Ref.1
FRR PIN CLUSTER (CANADA) [660]	3.2264	U-235		1527	TBD	TBD	TBD	TBD	TBD	TBD	TBD	TBD	TBD	TBD	TBD	Ref.1
FRR PIN CLUSTER (CANADA) [661]	0.0346	U-235		225	TBD	TBD	TBD	TBD	TBD	TBD	TBD	TBD	TBD	TBD	TBD	Ref.1
FRR PIN CLUSTER (CANADA) [662]	0.0976	U-235		741	TBD	TBD	TBD	TBD	TBD	TBD	TBD	TBD	TBD	TBD	TBD	Ref.1
FRR PIN CLUSTER (CANADA) [663]	0.0324	U-235		131	Type 1a-1	10	5.0022	5.91	8.500E-06	5.91	7539.0	1987.43	7.21	5.2037	1047.80	Ref.1
FRR SLOWPOKE (CANADA) [665]	0.0017	U-235		2	Type 6b	5	15.7895	18.66	2.683E-05	18.66	2058.2	542.57	TBD	TBD	TBD	Ref.1
FRR SLOWPOKE (CANADA) [666]	0.0017	U-235		2	Type 6b	5	15.7895	18.66	2.683E-05	18.66	2058.2	542.57	TBD	TBD	TBD	Ref.1
FRR SLOWPOKE (MONTREAL) [667]	0.0017	U-235		2	Type 6b	5	15.7895	18.66	2.683E-05	18.66	2058.2	542.57	TBD	TBD	TBD	Ref.1
FRR SLOWPOKE (CANADA) [668]	0.0017	U-235		2	Type 6b	5	15.7895	18.66	2.683E-05	18.66	2058.2	542.57	TBD	TBD	TBD	Ref.1
FRR SLOWPOKE (CANADA) [669]	0.0017	U-235		2	Type 6b	5	15.7912	18.67	2.683E-05	18.67	2057.9	542.51	TBD	TBD	TBD	Ref.1
FRR TUBES (GERMANY) [673]	0.1094	U-235		135	Type 1a-3	30	10.5263	12.44	1.789E-05	12.44	2380.8	627.61	7.21	3.9914	803.70	Ref.1
FRR TUBES (GERMANY) [674]	0.0162	U-235		18	Type 1a-3	30	11.6959	13.82	1.987E-05	13.82	2142.7	564.85	7.21	3.5923	723.33	Ref.1
FRR TUBES (GERMANY) [675]	0.1367	U-235		135	Type 1a-3	30	13.1579	15.55	2.236E-05	15.55	1904.6	502.09	7.21	3.1932	642.96	Ref.1

Table A-3. (continued).

Fuel Category: UAlx	MTHM	Fissile type	BOL enrich (peak)	FHU count	Basket design	FHUs per canister (max)	Linear loading	% of baseline fuel	Fissile atom-density		H/X atom ratio		Gd	Gd/X atom ratio		
Fuel Name [Fuel ID #]	metric tonnes		%	[units]	(type)	(#)	(g/cm)	(%)	(atom/b-cm) [per canister]	% of baseline fuel	moderator/ fissile atoms (per canister)	% of baseline fuel	kg (poison) per canister	poison/fissile atoms (per canister)	% of baseline fuel	Notes
FRR TUBES (DENMARK) [676]	0.0003	U-235		5	Type 1a-3	30	6.8199	8.06	1.159E-05	8.06	3671.4	967.85	7.21	6.1607	1240.50	Ref.1
FRR TUBES (DENMARK) [678]	0.0004	U-235		5	Type 1a-3	30	8.5965	10.16	1.461E-05	10.16	2912.7	767.83	7.21	4.8875	984.13	Ref.1
HIFAR (AUSTRALIA) [680]	0.0336	U-235		240	Type 1a-3	30	11.0888	13.11	1.884E-05	13.11	2266.5	597.48	7.21	3.7890	762.94	Ref.1
FRR TUBES (GERMANY) [683]	0.0134	U-235		105	Type 1a-3	30	10.5263	12.44	1.789E-05	12.44	2380.8	627.61	7.21	3.9914	803.70	Ref.1
FRR TUBES (AUSTRALIA) [684]	0.0327	U-235		169	Type 1a-3	30	9.3450	11.05	1.588E-05	11.05	2679.4	706.33	7.21	4.4960	905.30	Ref.1
FRR TUBES (GERMANY) [685]	0.0188	U-235		130	Type 1a-3	30	11.9298	14.10	2.027E-05	14.10	2100.7	553.78	7.21	3.5219	709.15	Ref.1
RECH-1 (CHILE) [708]	0.0080	U-235		58	Type 1a-2	20	6.5560	7.75	1.114E-05	7.75	5883.9	1551.10	7.21	6.4087	1290.43	Ref.1
ASTRA (AUSTRIA) [712]	0.0662	U-235	19.84	39	Type 1a-3	30	22.8435	27.00	3.882E-05	27.00	1441.4	379.98	7.21	1.8393	370.35	Ref.1
HOR (NETHERLANDS) [713]	0.0040	U-235		33	Type 1a-2	20	7.3446	8.68	1.248E-05	8.68	4650.4	1225.94	7.21	5.7206	1151.88	Ref.1
DR-3 (DENMARK) [714]	0.0088	U-235	88.88	88	Type 1a-3	30	8.1361	9.62	1.363E-05	9.62	4033.4	1063.29	7.21	5.1641	1039.82	Ref.1
FRR MTR-S (CANADA) [720]	0.0029	U-235		21	Type 1a-2	20	9.4752	11.20	1.610E-05	11.20	3560.0	938.49	7.21	4.4342	892.86	Ref.1
FRR ASTRA (AUSTRIA) [738]	0.0049	U-235		14	Type 1a-2	20	24.4055	28.85	4.147E-05	28.85	1382.2	364.36	7.21	1.7215	346.65	Ref.1
FRG-1 (GERMANY) [741]	0.1509	U-235		109	Type 1a-2	20	14.4175	17.04	2.450E-05	17.04	2546.2	671.24	7.21	2.9142	586.79	Ref.1
FRG-1 (GERMANY) [742]	0.0165	U-235		141	Type 1a-2	20	7.5073	8.87	1.276E-05	8.87	4890.0	1289.09	7.21	5.5966	1126.91	Ref.1
JEN-1 (SPAIN) [749]	0.0124	U-235		18	Type 1a-2	20	9.6522	11.41	1.640E-05	11.41	3427.5	903.55	7.21	4.3529	876.49	Ref.1
NEREIDE (FRANCE) [751]	0.0354	U-235		46	Type 1a-2	20	11.8895	14.05	2.020E-05	14.05	2858.2	753.46	7.21	3.5338	711.55	Ref.1
BER-II (HMI) (GERMANY) [758]	0.0121	U-235	93.03	112	Type 1a-2	20	6.4895	7.65	1.099E-05	7.65	5210.2	1373.51	7.21	6.4944	1307.69	Ref.1
DR-3 (DENMARK) [759]	0.3091	U-235	19.76	375	Type 1a-3	30	10.1718	12.02	1.728E-05	12.02	2712.8	715.16	7.21	4.1306	831.72	Ref.1
ENEA SALUGGIA (ITALY) [760]	0.0216	U-235		32	Type 1a-3	30	15.3024	18.09	2.600E-05	18.09	2171.4	572.42	7.21	2.7457	552.86	Ref.1
ESSOR (ITALY) [762]	0.0057	U-235		12	Type 1a-1	10	15.2066	17.97	2.584E-05	17.97	2036.7	536.92	7.21	2.7630	556.34	Ref.1
IOWA ST. UNIV. [792]	0.0035	U-235	93.31	22	Type 1a-3	30	17.1930	20.32	2.922E-05	20.32	1734.6	457.27	7.21	2.4437	492.06	Ref.1
JEN-1 (SPAIN) [795]	0.0038	U-235		23	Type 1a-2	20	9.6715	11.43	1.643E-05	11.43	3420.6	901.74	7.21	4.3442	874.73	Ref.1
R-2 SVTR (SWEDEN) [801]	0.0599	U-235		450	Type 1a-3	30	11.1541	13.18	1.895E-05	13.18	3472.6	915.44	7.21	3.7668	758.47	Ref.1
IAN-R1 (COLUMBIA) [803]	0.0007	U-235		5	Type 1a-2	20	9.9308	11.74	1.687E-05	11.74	3791.1	999.39	7.21	4.2308	851.90	Ref.1
FRM (GERMANY) [805]	0.0235	U-235		50	Type 1a-2	20	10.8697	12.85	1.847E-05	12.85	3119.0	822.24	7.21	3.8653	778.31	Ref.1
FRM (GERMANY) [806]	0.0032	U-235		31	Type 1a-2	20	5.6735	6.71	9.641E-06	6.71	5931.8	1563.72	7.21	7.4055	1491.16	Ref.1
RV-1 (VENEZUELA) [816]	0.0387	U-235		56	Type 1a-2	20	8.9156	10.54	1.515E-05	10.54	3728.8	982.99	7.21	4.7125	948.90	Ref.1
ATR [843]	0.0994	U-235	93.15	128	Type 1a-1	10	24.2227	28.63	4.116E-05	28.63	TBD	TBD	7.21	1.7345	349.26	Ref.1
ORR [850]	0.0099	U-235		11	Type 1a-3	30	16.2818	19.25	2.767E-05	19.25	2152.2	567.36	7.21	2.5805	519.60	Ref.1
UMRR (ROLLA) [881]	0.0048	U-235		28	Type 1a-2	20	11.9773	14.16	2.035E-05	14.16	2795.9	737.06	7.21	3.5079	706.34	Ref.1
JRR-2 (JAPAN) [885]	0.0625	U-235		144	Type 1a-3	30	18.3624	21.70	3.120E-05	21.70	1315.0	346.67	7.21	2.2881	460.73	Ref.1
JMTR (JAPAN) [886]	0.3236	U-235	45.01	570	Type 1a-2	20	16.9156	19.99	2.874E-05	19.99	2040.3	537.87	7.21	2.4838	500.13	Ref.1
BER-II (HMI) (END BOXES) (GERMANY) [892]	0.0000	U-235	100.00	6	Type 1a-5	50	1.949E-05	0.00002	3.312E-11	0.00002	1.92E+09	5.06E+08	TBD	TBD	TBD	Ref.1
FRJ (GERMANY) [933]	0.0269	U-235		195	Type 1a-3	30	4.3935	5.19	7.466E-06	5.19	6268.0	1652.36	7.21	9.5631	1925.60	Ref.1
R-2 SVTR (SWEDEN) [942]	0.3090	U-235		183	Type 1a-3	30	16.3085	19.28	2.771E-05	19.28	2375.3	626.19	7.21	2.5763	518.75	Ref.1
RPI (PORTUGAL) [943]	0.0292	U-235		39	Type 1a-2	20	9.5645	11.31	1.625E-05	11.31	3536.1	932.19	7.21	4.3928	884.53	Ref.1
ORR [944]	0.0537	U-235	19.82	33	Type 1a-2	20	18.5773	21.96	3.157E-05	21.96	1777.3	468.54	7.21	2.2616	455.40	Ref.1
SAPHIR (SWITZERLAND) [945]	0.0268	U-235	45.07	52	Type 1a-2	20	9.4922	11.22	1.613E-05	11.22	3569.3	940.94	7.21	4.4263	891.26	Ref.1
UNIV OF VIRGINIA [952]	0.0240	U-235		20	Type 1a-2	20	17.1826	20.31	2.920E-05	20.31	1976.2	520.97	7.21	2.4452	492.36	Ref.1
IOWA ST. UNIV. [953]	0.0192	U-235		24	Type 1a-3	30	18.4904	21.86	3.142E-05	21.86	1700.1	448.17	7.21	2.2723	457.54	Ref.1
IEA-R1 (BRAZIL) [954]	0.0050	U-235		43	Type 1a-2	20	7.9864	9.44	1.357E-05	9.44	4255.4	1121.81	7.21	5.2609	1059.31	Ref.1
MURR (COLUMBIA) [962]	0.0163	U-235		24	Type 1a-2	20	46.3076	54.74	7.869E-05	54.74	721.1	190.10	7.21	0.9073	182.69	Ref.1
FRJ TUBES (GERMANY) [999]	0.0030	U-235	19.73	3	Type 1a-3	30	13.6031	16.08	2.312E-05	16.08	2024.4	533.68	7.21	3.0886	621.92	Ref.1
FRJ (GERMANY) [1000]	0.0033	U-235		10	Type 1a-3	30	12.4773	14.75	2.120E-05	14.75	2207.1	581.82	7.21	3.3673	678.03	Ref.1

Table A-3. (continued).

Fuel Category: UAlx	MTHM	Fissile type	BOL enrich (pct)	FHU count	Basket design	FHUs per canister (max)	Linear loading	% of baseline fuel	Fissile atom-density		H/X atom ratio		Gd	Gd/X atom ratio		
Fuel Name [Fuel ID #]	metric tonnes		%	[units]	(type)	(#)	(g/cm)	(%)	(atom/b-cm) [per canister]	% of baseline fuel	moderator/ fissile atoms (per canister)	% of baseline fuel	kg (poison) per canister	poison/fissile atoms (per canister)	% of baseline fuel	Notes
UNIV OF MICHIGAN (CONTROL) [1005]	0.0329	U-235		82	Type 1a-2	20	4.8094	5.68	8.172E-06	5.68	6924.9	1825.54	7.21	8.7360	1759.05	Ref.1
JRR-3M (JAPAN) [1056]	0.1570	U-235	19.84	11	Type 1a-2	20	16.5350	19.54	2.810E-05	19.54	2093.6	551.92	7.21	2.5410	511.65	Ref.1
DR-3 (DENMARK) [1059]	0.0025	U-235	19.58	3	Type 1a-3	30	9.6125	11.36	1.633E-05	11.36	2870.7	756.76	7.21	4.3709	880.10	Ref.1
MNR (CANADA) [1064]	0.0014	U-235		11	Type 1a-3	30	11.7206	13.85	1.992E-05	13.85	2804.8	739.39	7.21	3.5847	721.81	Ref.1
SLOWPOKE (CANADA) [1065]	0.0009	U-235		1	Type 6b	5	15.7726	18.64	2.680E-05	18.64	2060.4	543.15	TBD	TBD	TBD	Ref.1
FRR FMRB (GERMANY) [1066]	0.0023	U-235		18	Type 1a-2	20	8.6814	10.26	1.475E-05	10.26	4378.1	1154.16	7.21	4.8397	974.50	Ref.1
FRR MTR-S (GERMANY) [1067]	0.0129	U-235		7	Type 1a-2	20	13.0994	15.48	2.226E-05	15.48	2607.4	687.36	7.21	3.2074	645.83	Ref.1
FRR MTR-S (GERMANY) [1068]	0.0092	U-235	45.07	28	Type 1a-2	20	5.8118	6.87	9.876E-06	6.87	5804.1	1530.08	7.21	7.2294	1455.68	Ref.1
GRR (GREECE) [1069]	0.0063	U-235		46	Type 1a-3	30	13.4296	15.87	2.282E-05	15.87	2591.0	683.04	7.21	3.1286	629.96	Ref.1
JRR-4 (JAPAN) [1070]	0.0016	U-235		11	Type 1a-3	30	15.3624	18.16	2.610E-05	18.16	2054.4	541.59	7.21	2.7349	550.70	Ref.1
JRR-4 (JAPAN) [1071]	0.0447	U-235	20.00	47	Type 1a-3	30	17.5539	20.75	2.983E-05	20.75	1798.0	473.98	7.21	2.3935	481.95	Ref.1
RU-1 (URAGUAY) [1073]	0.0079	U-235		15	Type 1a-2	20	8.1466	9.63	1.384E-05	9.63	4255.9	1121.94	7.21	5.1574	1038.48	Ref.1
IEA-R1 (BRAZIL) [1076]	0.0287	U-235		39	Type 1a-2	20	10.2205	12.08	1.737E-05	12.08	3301.3	870.30	7.21	4.1109	827.75	Ref.1
ORR EXPERMENTS [1086]	0.0010	U-235		1	TBD	TBD	TBD	TBD	TBD	TBD	TBD	TBD	TBD	TBD	TBD	Ref.1

References.

1. SNF database, Version 5.0.1
2. Analysis of Alternative Waste Forms: Phase 2 Report, TDR-CRW-MD-000004 Rev. 00, 2003
3. Evaluation of Codisposal Viability for Aluminum-Clad DOE-Owned Spent Fuel: Phase I Intact Disposal Canister, BBA000000-01717-5705-00011 Rev. 00, 1997
4. Evaluation of Codisposal Viability for Aluminum-Clad DOE-Owned Spent Fuel; Phase II Degraded Codisposal Waste Package Internal Criticality, BBA000000-01717-5705-00017 Rev. 00, 1997
5. Preliminary Design Specification for Department of Energy Standardized Spent Nuclear Fuel Canisters: Volume 1 - Design Specification, DOE/SNF/REP-011, August 1999
6. Description of Test Reactor Fuel Elements and Associated Behavior in Reprocessing, Idaho Nuclear, CI-1152, August 1969
7. Preliminary Design Specification for Department of Energy Standardized Spent Nuclear Fuel Canisters: Volume 1 - Design Specification, DOE/SNF/REP-011, Rev. 3, August 1999

Table A-4. U metal fuel category.

Fuel Category: Umetal	MTHM	Fissile type	BOL enrich (pct)	FHU count	Basket design	FHUs per canister (max)	Linear loading	% of baseline fuel	Fissile/atom-density		H/X atom ratio		Gd	Gd/X atom ratio		
Fuel Name [Fuel ID #]	metric tonnes		%		(type)	(#)	(g/cm)	(%)	(atom/b-cm) [per canister]	% of baseline fuel	moderator/fissile atoms (per canister)	% of baseline fuel	kg (poison) per canister	poison/fissile atoms (per canister)	% of baseline fuel	Notes
Baseline Fuel																
N reactor - Mark IA (surrogate)		U-235	1.15	288	Type 2a	288	103.1096	100	9.87E-05	100	312.3	100	- - -	- - -	- - -	Ref.1, 5
Other Fuel																
EBWR ENRICHED HEAVY [64]	2.983	U-235	- - -	53	Type 1a-1	10	27.8260	32.89	4.73E-05	32.88	1018.1	433.6	7.21	1.51	287.9	Ref. 1
HWCTR IMT [113]	0.093	- - -	- - -	82	Type 2a	288	7.7303	7.50	7.40E-06	7.50	6816.8	2182.4	- - -	- - -	- - -	Ref. 1
SINGLE PASS REACTOR FUEL [197]	0.407	U-235	- - -	139	Type 2a	288	29.5637	28.67	2.83E-05	28.67	1918.5	614.2	- - -	- - -	- - -	Ref. 1
SINGLE PASS REACTOR FUEL [198]	2.913	U-235	- - -	835	Type 2a	288	32.1156	31.15	3.07E-05	31.15	1766.0	565.4	- - -	- - -	- - -	Ref. 1
MISCELLANEOUS RSWF FUEL [366]	4.162	- - -	- - -	1	TBD	TBD	TBD	TBD	TBD	TBD	TBD	TBD	TBD	TBD	TBD	Ref. 1
HWCTR RMT & SMT [790]	0.064	- - -	- - -	10	Type 1a-1	10	0.7875	0.93	1.34E-06	0.93	39491.0	16820.3	11.63	53.32	10165.6	Ref. 1
HWCTR TWNT [791]	0.322	- - -	- - -	15	Type 1a-1	10	3.4762	4.11	5.91E-06	4.11	5689.0	2423.1	11.63	12.08	2302.8	Ref. 1
HWCTR ETWO [867]	0.045	- - -	- - -	6	Type 1a-1	10	3.0141	3.56	5.12E-06	3.56	10332.7	4401.0	11.63	13.93	2655.9	Ref. 1
EBWR ENRICHED THIN [887]	2.194	- - -	- - -	54	Type 1a-1	10	20.7075	24.48	3.52E-05	24.47	1368.1	582.7	7.21	2.03	386.8	Ref. 1
EBWR ET-11 [888]	0.038	U-235	- - -	1	Type 6?	4	7.7400	***	1.31E-05	***	TBD	***	TBD	TBD	TBD	Ref. 1
EBWR NORMAL HEAVY [889]	0.566	U-235	- - -	11	Type 1a-1	10	14.0800	16.64	2.39E-05	16.64	2012.1	857.0	7.21	2.98	568.9	Ref. 1
EBWR NORMAL THIN [890]	0.279	U-235	- - -	7	Type 1a-1	10	11.1621	13.19	1.90E-05	13.19	2538.0	1081.0	7.21	3.76	717.7	Ref. 1
HFEF FISSION CHAMBERS [894]	0.024	- - -	- - -	1	TBD	TBD	TBD	TBD	TBD	TBD	TBD	TBD	TBD	TBD	TBD	Ref. 1
EBR-II, TREAT, MTR EXPER. & IPNS TARGET [1088]	0.033	- - -	- - -	1	TBD	TBD	TBD	TBD	TBD	TBD	TBD	TBD	TBD	TBD	TBD	Ref. 1
N REACTOR [991]	2096.202	U-235	1.25	103680	(see below)	(see below)	(see below)	(see below)	(see below)	(see below)	(see below)	(see below)	- - -	- - -	- - -	Ref. 1
Mark IA - M	- - -	U-235	0.947&1.250	- - -	Type 2a	288	103.1096	100	9.87E-05	100	312.3	100	- - -	- - -	- - -	Ref. 2, 5
Mark IA - T	- - -	U-235	0.947&1.250	- - -	Type 2a	288	96.6072	93.69	9.25E-05	93.69	350.0	112.05	- - -	- - -	- - -	Ref. 5
Mark IA - F	- - -	U-235	0.947&1.250	- - -	Type 2a	288	73.3843	71.17	7.02E-05	71.17	548.3	175.55	- - -	- - -	- - -	Ref. 5
Mark IV - S	- - -	U-235	0.947	- - -	Type 2b	270	114.7533	111.29	1.10E-04	111.29	283.2	90.66	- - -	- - -	- - -	Ref. 2, 5
Mark IV - A	- - -	U-235	0.947	- - -	Type 2b	270	107.5812	104.34	1.03E-04	104.34	319.8	102.40	- - -	- - -	- - -	Ref. 5
Mark IV - C	- - -	U-235	0.947	- - -	Type 2b	270	101.8436	98.77	9.75E-05	98.77	355.4	113.78	- - -	- - -	- - -	Ref. 5
Mark IV - E	- - -	U-235	0.947	- - -	Type 2b	270	75.3069	73.04	7.21E-05	73.04	578.8	185.32	- - -	- - -	- - -	Ref. 5

References.

1. SNF database, Version 5.0.1
2. N Reactor (U-metal) Fuel Characteristics for Disposal Criticality Analysis, DOE/SNF/REP-056 Rev. 0, May 2000
3. Intact and Degraded Component Criticality Calculations of N Reactor (U Metal) Spent Nuclear Fuel, CAL-EDC-NU-000003 Rev. 00, URN-0797
4. Evaluation of Codisposal Viability for U-Metal (N Reactor) DOE-Owned Fuel, TDR-EDC-NU-000004 Rev. 00, January 2001
5. Hanford Spent Fuel Inventory Baseline (Bergsman report), WHC-SD-SNF-TI-001, Rev. 0, June 1994
6. Preliminary Design Specification for Department of Energy Standardized Spent Nuclear Fuel Canisters: Volume 1 - Design Specification, DOE/SNF/REP-011, Rev. 3, August 1999

Table A-5. MOX fuel category.

Fuel Category: MOX	MTHM	Fissile type	BOL enrich	FrfU count	Basket design	FrfUs per canister (max)	Linear loading	% of baseline fuel	Fissile atom density		H/X atom ratio		Gd	Gd/X atom ratio		
Fuel Name [Fuel ID #]	metric tonnes		%		(type)	(#)	(g/cm)	(%)	(atom/b-cm) [per canister]	% of baseline fuel	moderator/ fissile atoms (per canister)	% of baseline fuel	kg (poison) per canister	poison/fissile atoms (per canister)	% of baseline fuel	Notes
Baseline Fuel																
FFTF - Type 4.1		Pu-239	29.28	5	Type 3	5	117.4098	100	1.995E-04	100	321.1	100	9.29	0.2857	100	Ref. 1, 2, 3, 4
Other Fuel																
BABCOCK & WILCOX SCRAP [18]	0.0001	Pu-239	- - -	1	TBD	TBD	TBD	TBD	TBD	TBD	TBD	TBD	TBD	TBD	TBD	Ref. 1
BRP-EP [29]	0.3519	Pu-239	4.37	3	Type 6	TBD	TBD	TBD	TBD	TBD	TBD	TBD	TBD	TBD	TBD	Ref. 1
EBWR [63]	0.9326	Pu-239	1.61	25	Type 3	5	TBD	TBD	TBD	TBD	TBD	TBD	TBD	TBD	TBD	Ref. 1
EPRI [67]	0.00002	Pu-239	- - -	1	TBD	TBD	TBD	TBD	TBD	TBD	TBD	TBD	TBD	TBD	TBD	Ref. 1
FFTF-DFA/TDFA [71]	8.4437	Pu-239	0.52	261	Type 3	5	93.9410	80.01	1.596E-04	80.01	401.4	124.98	9.29	0.3570	124.98	Ref. 1
GE TEST [96]	0.0452	mix	- - -	22	TBD	TBD	TBD	TBD	TBD	TBD	TBD	TBD	TBD	TBD	TBD	Ref. 1
H. B. ROBINSON [99]	0.0005	Pu-239	2.90	1	TBD	TBD	TBD	TBD	TBD	TBD	TBD	TBD	TBD	TBD	TBD	Ref. 1
LWR SAMPLES (MOX) [134]	0.0127	Pu-239	- - -	5	TBD	TBD	TBD	TBD	TBD	TBD	TBD	TBD	TBD	TBD	TBD	Ref. 1
ORR-BW-1 [160]	0.0001	Pu-239	- - -	1	Type 1a-3	10	TBD	TBD	TBD	TBD	TBD	TBD	TBD	TBD	TBD	Ref. 1
FFTF-TFA-AB-1 [317]	0.0347	Pu-239	- - -	1	Type 3	5	93.2563	79.43	1.585E-04	79.43	404.3	125.90	9.29	0.3596	125.90	Ref. 1
FFTF-TFA PINS [320]	0.3897	Pu-239	- - -	1645	TBD	TBD	TBD	TBD	TBD	TBD	TBD	TBD	TBD	TBD	TBD	Ref. 1
FFTF-TFA-ACN-1 PINS [321]	0.0143	Pu-239	- - -	90	TBD	TBD	TBD	TBD	TBD	TBD	TBD	TBD	TBD	TBD	TBD	Ref. 1
FFTF-TFA-CRBR-3 & CRBR-5 [322]	0.0694	Pu-239	- - -	2	Type 3	5	132.8900	113.18	2.258E-04	113.18	283.7	88.35	9.29	0.2524	88.35	Ref. 1
FFTF-DFA/TDFA PINS [323]	0.4440	Pu-239	- - -	2768	TBD	TBD	TBD	TBD	TBD	TBD	TBD	TBD	TBD	TBD	TBD	Ref. 1
FFTF-TFA-DEA-2 [324]	0.0346	Pu-239	- - -	1	Type 3	5	83.1527	70.82	1.413E-04	70.82	453.4	141.20	9.29	0.4033	141.20	Ref. 1
FFTF-TFA-ACO-2, 4 THRU 16 [329]	0.6060	Pu-239	- - -	14	Type 3	5	148.7133	126.66	2.527E-04	126.66	253.5	78.95	9.29	0.2255	78.95	Ref. 1
FFTF-TFA-MFF-1 & 1A (CDE) [330]	0.0881	Pu-239	- - -	2	Type 3	5	141.8114	120.78	2.410E-04	120.78	265.9	82.79	9.29	0.2365	82.79	Ref. 1
FFTF-TFA-PC-2,4 & 5 [333]	0.1312	Pu-239	- - -	3	Type 3	5	115.6313	98.49	1.965E-04	98.49	326.1	101.54	9.29	0.2901	101.54	Ref. 1
FFTF-TFA-SRF-3&4 [334]	0.0858	U-235	- - -	2	Type 3	5	452.5691	385.46	7.690E-04	385.46	83.3	25.94	9.29	0.0741	25.94	Ref. 1
FFTF-TFA-UO-1 [335]	0.0350	Pu-239	- - -	1	Type 3	5	88.3323	75.23	1.501E-04	75.23	426.8	132.92	9.29	0.3797	132.92	Ref. 1
EBR-II OXIDE FUEL EXPER [345]	0.0570	Pu-239	- - -	571	TBD	TBD	TBD	TBD	TBD	TBD	TBD	TBD	TBD	TBD	TBD	Ref. 1
FFTF OXIDE EXPERIMENTS [349]	0.0002	Pu-239	- - -	1	Type 3	5	0.6665	0.57	1.132E-06	0.57	56579.8	17619	5.76	50.3314	17619	Ref. 1
SODIUM LOOP SAFETY FAC. [352]	0.0040	Pu-239	82.38	20	TBD	TBD	TBD	TBD	TBD	TBD	TBD	TBD	TBD	TBD	TBD	Ref. 1
US/UK FUEL PINS [356]	0.0080	Pu-239	- - -	66	TBD	TBD	TBD	TBD	TBD	TBD	TBD	TBD	TBD	TBD	TBD	Ref. 1
EBR-II OXIDE FUEL EXPER [364]	0.0925	Pu-239	- - -	992	TBD	TBD	TBD	TBD	TBD	TBD	TBD	TBD	TBD	TBD	TBD	Ref. 1
SODIUM LOOP SAFETY FAC [367]	0.0073	Pu-239	87.05	12	TBD	TBD	TBD	TBD	TBD	TBD	TBD	TBD	TBD	TBD	TBD	Ref. 1
MOX SCRAP SNF [368]	0.1063	Pu-239	- - -	1	TBD	TBD	TBD	TBD	TBD	TBD	TBD	TBD	TBD	TBD	TBD	Ref. 1
MISCELLANEOUS TREAT FUEL [369]	0.0001	Pu-239	- - -	1	TBD	TBD	TBD	TBD	TBD	TBD	TBD	TBD	TBD	TBD	TBD	Ref. 1
PNL MOX FUEL [414]	0.0002	Pu-239	- - -	5	TBD	TBD	TBD	TBD	TBD	TBD	TBD	TBD	TBD	TBD	TBD	Ref. 1
PNL MOX FUEL (7010) [415]	0.00001	Pu-239	- - -	7	TBD	TBD	TBD	TBD	TBD	TBD	TBD	TBD	TBD	TBD	TBD	Ref. 1
PNL MOX FUEL (7055) [416]	0.0001	Pu-239	- - -	12	TBD	TBD	TBD	TBD	TBD	TBD	TBD	TBD	TBD	TBD	TBD	Ref. 1
PNL MOX FUEL (7057) [417]	0.0024	Pu-239	- - -	4	TBD	TBD	TBD	TBD	TBD	TBD	TBD	TBD	TBD	TBD	TBD	Ref. 1

Table A-5. (continued).

Fuel Category: MOX	MTHM	Fissile type	BOL enrich	FHU count	Basket design	FHUs per canister (max)	Linear loading	% of baseline fuel	Fissile/atom-density		HX atom ratio		Gd	Gd/X atom ratio		
Fuel Name [Fuel ID #]	metric tonnes		%		(type)	(#)	(g/cm)	(%)	(atom/b-cm) [per canister]	% of baseline fuel	moderator/ fissile atoms (per canister)	% of baseline fuel	kg (poison) per canister	poison/fissile atoms (per canister)	% of baseline fuel	Notes
PNL MOX PELLETS (7057) [418]	0.0006	Pu-239	- - -	1	TBD	TBD	TBD	TBD	TBD	TBD	TBD	TBD	TBD	TBD	TBD	Ref. 1
PNL MOX PINS (7057) [419]	0.000005	Pu-239	- - -	1	TBD	TBD	TBD	TBD	TBD	TBD	TBD	TBD	TBD	TBD	TBD	Ref. 1
PNL-3 [420]	0.0001	Pu-239	- - -	6	TBD	TBD	TBD	TBD	TBD	TBD	TBD	TBD	TBD	TBD	TBD	Ref. 1
PNL MOX STAR 7 [422]	0.0003	Pu-239	- - -	1	TBD	TBD	TBD	TBD	TBD	TBD	TBD	TBD	TBD	TBD	TBD	Ref. 1
PNL MOX STAR 3 [433]	0.0001	Pu-239	- - -	1	TBD	TBD	TBD	TBD	TBD	TBD	TBD	TBD	TBD	TBD	TBD	Ref. 1
PNL MOX STAR 4 [434]	0.0001	Pu-239	- - -	1	TBD	TBD	TBD	TBD	TBD	TBD	TBD	TBD	TBD	TBD	TBD	Ref. 1
PNL MOX STAR 5 [435]	0.0001	Pu-239	- - -	1	TBD	TBD	TBD	TBD	TBD	TBD	TBD	TBD	TBD	TBD	TBD	Ref. 1
PNL MOX STAR 6 [436]	0.0001	Pu-239	- - -	1	TBD	TBD	TBD	TBD	TBD	TBD	TBD	TBD	TBD	TBD	TBD	Ref. 1
SAXTON [787]	0.2399	Pu-239	- - -	43	TBD	TBD	TBD	TBD	TBD	TBD	TBD	TBD	TBD	TBD	TBD	Ref. 1
EBR-II & TREAT EXPERIMENTS [858]	0.0178	Pu-239	- - -	1	TBD	TBD	TBD	TBD	TBD	TBD	TBD	TBD	TBD	TBD	TBD	Ref. 1
SAXTON [883]	0.0956	Pu-239	- - -	25	TBD	TBD	TBD	TBD	TBD	TBD	- - -	- - -	- - -	- - -	- - -	Ref. 1
(following fuels from Th-U Carbide group)																
FFTF-TFA-FC-1	0.0426	Pu-239	26.47%	1	Type 3	5	107.8223	91.83	1.832E-04	91.83	294.3	92	5.76	0.1927	67	Ref. 1, 2, 3, 4
FFTF CARBIDE FUEL EXPER	0.0074	Pu-239	19.83%	15	Type 3	5	0.9530	0.81	1.619E-06	0.81	40967.9	12758	5.76	21.8059	7634	Ref. 1
FFTF-TFA-ACN-1 RODS	0.0026	Pu-239	40.46%	16	Type 3	5	0.5571	0.47	9.466E-07	0.47	70218.5	21866	5.76	37.3055	13059	Ref. 1
FFTF-TFA PINS (AC-3)	0.0069	Pu-239	1.01%	72	Type 3	5	0.0149	0.01	2.537E-08	0.01	2620168.4	815927	5.76	1391.9191	487265	Ref. 1
(following fuels from LEU oxide group)																
FFTF-TFA-ABA-1 THRU 6	0.2574	U-235	0.20%	6	Type 3	TBD	TBD	TBD	TBD	TBD	TBD	TBD	TBD	TBD	TBD	Ref. 1
FFTF-TFA-WBO18 & WBO42	0.0950	U-235	0.20%	2	Type 3	TBD	TBD	TBD	TBD	TBD	TBD	TBD	TBD	TBD	TBD	Ref. 1

References:
1. SNF database, Version 5.0.1
2. FFTF (MOX) Fuel Characteristics for Disposal Criticality Analysis, DOE/SNF/REP-032, Rev. 1, June 2002
3. Evaluation of Codisposal Viability for MOX (FFTF) DOE-Owned Fuel, BBA00000-01717-5705-00023 Rev 00, September 1999
4. Criticality Calculations for the Most Reactive Degraded Configuration for the FFTF SNF Codisposal WP Containing and Intact Ident-69 Container, CAL-DSD-NU-000002, Rev A, August 2002
5. Preliminary Design Specification for Department of Energy Standardized Spent Nuclear Fuel Canisters. Volume 1 - Design Specification, DOE/SNF/REP-011, Rev. 3, August 1999

Table A-6. UMo fuel category.

Fuel Category: UZr/UMo	MTIHM	Fissile type	235U enrichment	FHU count	Basket design	FHUs per canister (max)	Linear loading	% of baseline fuel	Fissile atom density		H/X atom ratio		Gd	Gd/X atom ratio		
Fuel Name [Fuel ID #]	metric tonnes		%		(type)	(#)	(g/cm)	(%)	(atom/b-cm) [per canister]	% of baseline fuel	moderator/ fissile atoms (per canister)	% of baseline fuel	kg (poison) per canister	poison/fissile atoms (per canister)	% of baseline fuel	Notes
Baseline Fuel																
FERMI CORE I & 2 (per can w/140 pins)		U-235	25.69	194	Type 4-2	24	441.326	100	7.499E-04	100	55	100	9.04	0.1194	100	Ref. 1,2,3,4,5; significantly under-moderated
FERMI CORE I & 2 (per FHU [indiv pins])		U-235	25.69	27160	- - -	- - -	- - -	- - -			- - -	- - -				
					pins											
Other Fuels					1384.75327											
CP-5 CONVERTER CYLINDERS [36]	0.001	U-235	93.00	2	Type 1a-3	30	65.461	76.62	1.112E-04	76.61	534	331.4	7.61	0.6774	388.00	Ref. 1
FERMI CORE I & 2 (CORE SHIM) [69]	0.037	U-235	- - -	260	Type 4-2	24	217.745	49.34	3.700E-04	49.34	160	292.5	9.04	0.2419	202.68	Ref. 1,2,3,4,5
HWCTR DRIVER [117]	0.036	U-235	- - -	76	Type 1a-1	10	9.748	11.4	1.656E-05	11.41	3304	2049.8	7.61	2.8186	1614.29	Ref. 1
HWCTR 3EMT-2 [118]	0.008	U-235	- - -	7	Type 1a-2	20	1.361	1.62	2.347E-06	1.62	4737	2938.5	7.61	19.8895	11391.44	Ref. 1
SHIPPINGPORT PWR-C1-S4 [194]	0.002	U-235	- - -	1	Type 6d-1	1	4.024	0.9	6.838E-06	0.91	8244	679.1	TBD	TBD	TBD	Ref. 1
SPEC (ORMIE) [208]	0.002	U-235	5.15	1	Type 1a-4	40	19.161	22.45	3.259E-05	22.45	1800	1116.6	7.61	2.3119	1324.14	Ref. 1
FERMI CORE I & 2 (DECLAD) [453]	0.111	U-235	- - -	976	Type 4-2	24	382.646	86.70	6.502E-04	86.70	91	166.4	9.04	0.1377	115.34	Ref. 1,2,3,4,5; significantly under-moderated
FERMI CORE I & 2 (SECTIONED) [454]	0.126	U-235	25.77	980	Type 4-2	24	429.931	97.42	7.306E-04	97.42	81	148.1	9.04	0.1225	102.66	Ref. 1,2,3,4,5; significantly under-moderated
FERMI CORE I & 2 (SODIUM WORTH) [455]	0.055	U-235	25.69	420	Type 4-2	24	444.292	100.67	7.550E-04	100.67	78	143.3	9.04	0.1186	99.33	Ref. 1,2,3,4,5; significantly under-moderated
FERMI CORE I & 2 (STD FUEL SUBASSEMBLY) [456]	3.586	U-235	- - -	27160	Type 4-2	24	441.326	100.00	7.499E-04	100.00	79	144.3	9.04	0.1194	100.00	Ref. 1,2,3,4,5; significantly under-moderated
FERMI CORE I & 2 (CORE FOIL) [457]	0.018	U-235	- - -	136	Type 4-2	24	436.672	98.72	7.403E-04	98.72	80	146.2	9.04	0.1209	101.30	Ref. 1,2,3,4,5; significantly under-moderated
HWCTR SPR [783]	0.438	U-235	- - -	56	Type 1a-1	10	1.189	1.39	2.021E-06	1.39	27472	17042.2	7.61	23.0982	13229.19	Ref. 1
HWCTR TFEN [880]	0.162	U-235	- - -	11	Type 1a-1	10	6.527	7.64	1.109E-05	7.64	4099	2543.1	7.61	4.2093	2410.84	Ref. 1
HWCTR IS [977]	0.016	U-235	- - -	3	Type 1a-1	10	0.673	0.79	1.144E-06	0.15	49181	30509.3	7.61	40.8184	23378.23	Ref. 1
	Example Combination[a]:															
HWCTR DRIVER (max load of 10 FHU/canister)	0.033	U-235		70	Type 1a-1	10	9.748	11.4	1.656E-05	11.41	1662	1024.9	7.61	2.8188	537.38	Ref. 1
HWCTR SPR (max load of 10 FHU/canister)	0.391	U-235		50	Type 1a-1	10	1.189	1.39	2.021E-06	1.39	13736	8521.1	7.61	23.0982	4403.84	Ref. 1
HWCTR TFEN (max. load of 10 FHU/canister)	0.147	U-235		10	Type 1a-1	10	6.527	7.64	1.109E-05	7.64	2050	1271.5	7.61	4.2093	802.54	Ref. 1
HWCTR TFEN	0.015	U-235		1	Type 1a-1	10	0.653	0.76	1.109E-06	0.76	20497	12715.4	7.61	42.0933	- - -	Ref. 1
HWCTR SPR	0.047	U-235		6	Type 1a-1	10	1.189	1.39	2.021E-06	1.39	13736	8521.1	7.61	23.0982	- - -	Ref. 1
(combined composite in single canister)	0.062	U-235		7	*Type 1a-1*	*10*	*1.842*	2.16	*3.130E-06*	2.16	9071	5627.0	7.61	14.9142	2843.51	
HWCTR DRIVER	0.003	U-235		6	Type 1a-1	10	5.849	6.86	9.938E-06	6.84	2754	1708.1	7.61	4.6976	- - -	Ref. 1
HWCTR IS	0.016	U-235		3	Type 1a-1	10	0.202	0.24	3.431E-07	0.24	81968	50848.8	7.61	136.0613	- - -	Ref. 1
(combined composite in single canister)	0.019	U-235		9	*Type 1a-1*	*10*	*6.050*	7.08	*1.028E-05*	7.08	2322	1440.7	7.61	4.6408	865.74	

References
1 SNF database, Version 5.0 1
2 Fermi (U-Mo) Fuel Characteristics for Disposal Criticality Analysis, DOE/SNF/REP-035 Rev 0, February 1999
3 Enrico Fermi Fast Reactor Spent Nuclear Fuel Criticality Calculations: Intact Mode, BBA000000-01717-210-00037 Rev. 00, MOL.19990125.0079
4 Enrico Fermi Fast Reactor Spent Nuclear Fuel Criticality Calculations: Degraded Mode, CAL-EDU-NU-000001 Rev. 00, MOL.20000802.0002
5 Evaluation of Codisposal Viability for U-Zr/U-Mo Alloy (Enrico Fermi) DOE-Owned Fuel, TDR-EDC-NU-000002 Rev 00, August 2000
6 Preliminary Design Specification for Department of Energy Standardized Spent Nuclear Fuel Canisters Volume 1 - Design Specification, DOE/SNF/REP-011, Rev. 3, August 1999

Table A-7. $UZrH_x$ fuel category.

Fuel Category: UZrHx	MTHM	Fissile type	235-enriched	FHU count	Basket design	FHUs per canister (max)	Linear loading	% of baseline fuel	Fissile/atom-density		H/X ratio		Gd	Gd/X atom ratio		
Fuel Name [Fuel ID #]	metric tonnes		%	[units]	(type)	(#)	(g/cm)	(%)	(atom/b-cm) [per canister]	% of baseline fuel	moderator/ fissile atoms	% of baseline fuel	kg (poison) per canister	poison/fissile atoms (per canister)	% of baseline fuel	Notes
Baseline Fuel																
TRIGA-FLIP	- - -	U-235	70	111	Type 5-3	111	59.250	100	2.806E-04	100	868	100	8.9	0.8752	100	Ref. 1,2,3,4
Other fuels																
TRIGA STD (U OF AZ) [59]	0.0158	U-235	- - -	84	Type 5-3	111	14.6487	24.72	6.94E-05	24.72	3510	404.5	14.915	5.9324	677.8	Ref. 1
GA RERTR [90]	0.0031	U-235	19.79	1	Type 1a-2	20	29.7373	35.15	1.41E-04	97.00	903	104.1	7.21	1.4127	161.4	SS scrap can within a can
SNAP [203]	0.0298	U-235	- - -	615	Type 5-3	111	18.7847	31.70	8.90E-05	31.70	1441	166.1	14.915	4.6262	528.6	Ref. 1
TRIGA STD [233]	0.0172	U-235	- - -	90	Type 5-3	111	15.7513	26.58	7.46E-05	26.58	3264	376.2	14.915	5.5171	630.4	Ref. 1
TRIGA STD [235]	0.0119	U-235	- - -	65	Type 5-3	111	15.6890	26.48	7.43E-05	26.48	3294	379.6	14.915	5.5390	632.9	Ref. 1
BER-II TRIGA (GERMANY) [236]	0.0092	U-235	44.03	21	Type 1a-2	20	15.0072	17.74	7.11E-05	48.95	3830	441.35	7.21	2.7992	319.8	Ref. 1
TRIGA STD [237]	0.0376	U-235	- - -	203	Type 5-3	111	13.9878	23.61	6.63E-05	23.61	3676	423.6	14.915	6.2127	709.9	Ref. 1
TRIGA STD [238]	0.0093	U-235	- - -	71	Type 5-3	111	10.1151	17.07	4.79E-05	17.07	5109	588.7	14.915	8.5913	981.7	Ref. 1
TRIGA FLIP [239]	0.0012	U-235	- - -	7	Type 5-3	111	49.8189	84.08	2.36E-04	84.08	1103	127.1	14.915	1.7443	199.3	Ref. 1, 2, 3, FLIP fuel
TRIGA FLIP [240]	0.0156	U-235	- - -	87	Type 5-3	111	51.9466	87.67	2.46E-04	87.67	1058	121.9	14.915	1.6729	191.1	Ref. 1, 2, 3, FLIP fuel
TRIGA FLIP [241]	0.0146	U-235	- - -	96	Type 5-3	111	41.5444	70.12	1.97E-04	70.12	1323	152.4	14.915	2.0918	239.0	Ref. 1, 2, 3, FLIP fuel
TRIGA FLIP [242]	0.0155	U-235	- - -	92	Type 5-3	111	49.7865	84.03	2.36E-04	84.03	1104	127.2	14.915	1.7455	199.4	Ref. 1, 2, 3, FLIP fuel
TRIGA FLIP [243]	0.0133	U-235	- - -	79	Type 5-3	111	50.5516	85.32	2.39E-04	85.32	1087	125.3	14.915	1.7191	196.4	Ref. 1, 2, 3, FLIP fuel
TRIGA STD [244]	0.0197	U-235	- - -	114	Type 5-3	111	14.1184	23.83	6.69E-05	23.83	3642	419.7	14.915	6.1552	703.3	Ref. 1
TRIGA STD [246]	0.0216	U-235	19.97	115	Type 5-3	111	15.2819	25.79	7.24E-05	25.79	3365	387.7	14.915	5.6865	649.8	Ref. 1
TRIGA STD [250]	0.0180	U-235	- - -	95	Type 5-3	111	16.2597	27.44	7.70E-05	27.44	3162	364.4	14.915	5.3446	610.7	Ref. 1
TRIGA STD [251]	0.0146	U-235	- - -	77	Type 5-3	111	15.5878	26.31	7.38E-05	26.31	3299	380.1	14.915	5.5750	637.0	Ref. 1
TRIGA STD [252]	0.0091	U-235	- - -	50	Type 5-3	111	13.4372	22.68	6.36E-05	22.68	3827	440.9	14.915	6.4672	739.0	Ref. 1
TRIGA STD [253]	0.0305	U-235	- - -	163	Type 5-3	111	14.7914	24.96	7.01E-05	24.96	3476	400.6	14.915	5.8751	671.3	Ref. 1
TRIGA STD [254]	0.0191	U-235	19.49	102	Type 5-3	111	14.2134	23.99	6.73E-05	23.99	3618	416.9	14.915	6.1140	698.6	Ref. 1
TRIGA STD [256]	0.0109	U-235	- - -	58	Type 5-3	111	15.8638	26.77	7.51E-05	26.77	3258	375.4	14.915	5.4780	625.9	Ref. 1
TRIGA STD [258]	0.0143	U-235	- - -	85	Type 5-3	111	12.1410	20.49	5.75E-05	20.49	4235	488.0	14.915	7.1577	817.9	Ref. 1
TRIGA STD [260]	0.0163	U-235	19.73	93	Type 5-3	111	15.7021	26.50	7.44E-05	26.50	3275	377.3	14.915	5.5344	632.4	Ref. 1
TRIGA STD [261]	0.0161	U-235	19.49	92	Type 5-3	111	14.2785	24.10	6.76E-05	24.10	3601	415.0	14.915	6.0862	695.4	Ref. 1
TRIGA STD [262]	0.0222	U-235	- - -	128	Type 5-3	111	14.2920	24.12	6.77E-05	24.12	3598	414.6	14.915	6.0804	694.8	Ref. 1
TRIGA STD [264]	0.0198	U-235	- - -	104	Type 5-3	111	15.6938	26.49	7.43E-05	26.49	3276	377.5	14.915	5.5373	632.7	Ref. 1
TRIGA STD [265]	0.0298	U-235	- - -	156	Type 5-3	111	15.6292	26.38	7.40E-05	26.38	3290	379.1	14.915	5.5602	635.3	Ref. 1
TRIGA STD [267]	0.0413	U-235	19.90	222	Type 5-3	111	13.5233	22.82	6.41E-05	22.82	3821	440.3	14.915	6.4260	734.3	Ref. 1
TRIGA STD [268]	0.0235	U-235	- - -	137	Type 5-3	111	13.2931	22.44	6.30E-05	22.44	3868	445.7	14.915	6.5373	747.0	Ref. 1
TRIGA HIGH POWER (ROMANIA) [302]	0.0140	U-235	93.14	611	Type 5-3	111	8.5901	14.50	4.07E-05	14.50	6878	792.6	14.915	10.1165	1155.9	Ref. 1, Hi-Power
TRIGA STD (HANNOVER) [303]	0.0134	U-235	- - -	71	Type 5-3	111	15.8186	26.70	7.49E-05	26.70	3267	376.5	14.915	5.4936	627.7	Ref. 1
TRIGA STD (GERMANY) [305]	0.0029	U-235	- - -	15	Type 5-3	111	15.4852	26.14	7.33E-05	26.13	3320	382.6	14.915	5.6119	641.2	Ref. 1
TRIGA STD [314]	0.0122	U-235	19.79	66	Type 5-3	111	15.7366	26.56	7.45E-05	26.56	3284	378.4	14.915	5.5222	631.0	Ref. 1
TRIGA FFCR (DORF) [315]	0.0004	U-235	19.79	2	Type 5-2	74	10.7132	18.08	5.07E-05	18.08	4776	550.4	14.915	8.1116	926.9	Ref. 1, std FFCR
TRIGA STD (HANFORD) [316]	0.0063	U-235	19.90	33	Type 5-3	111	16.0698	27.12	7.61E-05	27.12	3200	368.7	14.915	5.4078	617.9	Ref. 1
TRIGA STD [353]	0.0003	U-235	19.66	2	Type 5-3	111	13.3387	22.51	6.32E-05	22.51	3855	444.2	14.915	6.5150	744.4	Ref. 1
TRIGA FLIP [354]	0.0010	U-235	- - -	6	Type 5-3	111	48.3190	81.55	2.29E-04	81.55	1137	131.1	14.915	1.7995	205.5	Ref. 1, 2, 3, FLIP fuel
TRIGA STD [370]	0.0069	U-235	- - -	40	Type 5-3	111	13.3387	22.51	6.32E-05	22.51	3855	444.2	14.915	6.5150	744.4	Ref. 1
TRIGA STD [447]	0.0113	U-235	20.00	58	Type 5-3	111	16.9688	28.64	8.04E-05	28.64	3045	350.9	14.915	5.1212	585.2	Ref. 1
TRIGA FFCR [448]	0.0006	U-235	19.94	4	Type 5-2	74	9.0554	15.28	4.29E-05	15.28	5651	651.1	14.915	9.5966	1096.5	Ref. 1, std FFCR fuel
TRIGA STD (U OF ILL) [449]	0.0240	U-235	20.00	133	Type 5-3	111	14.1146	23.82	6.69E-05	23.82	3643	419.8	14.915	6.1568	703.5	Ref. 1
TRIGA STD (AUSTRIA) [462]	0.0118	U-235	- - -	66	Type 5-3	111	15.1438	25.56	7.17E-05	25.56	3412	393.2	14.915	5.7384	655.7	Ref. 1

Table A-7. (continued).

Fuel Category: UZrHx	MTHM	Fissile type	U235 enrichment	FHU count	Basket design	FHUs per canister (max)	Linear loading	% of baseline fuel	Fissile/atom-density		H/X ratio		Gd	Gd/X atom ratio		
Fuel Name [Fuel ID #]	metric tonnes		%	[units]	(type)	(#)	(g/cm)	(%)	(atom/b-cm) [per canister]	% of baseline fuel	moderator/ fissile atoms	% of baseline fuel	kg (poison) per canister	poison/fissile atoms (per canister)	% of baseline fuel	Notes
TRIGA STD (FINLAND) [463]	0.0123	U-235	- - -	69	Type 5-3	111	15.1121	25.51	7.16E-05	25.51	3420	394.1	14.915	5.7505	657.1	Ref 1
TRIGA STD (HEIDELBERG) [464]	0.0114	U-235	- - -	65	Type 5-3	111	13.7131	23.14	6.49E-05	23.14	3768	434.3	14.915	6.3371	724.1	Ref 1
TRIGA STD (GERMANY) [465]	0.0116	U-235	19.72	65	Type 5-3	111	15.1570	25.58	7.18E-05	25.58	3409	392.9	14.915	5.7334	655.1	Ref 1
TRIGA STD (ITALY) [466]	0.0107	U-235	- - -	60	Type 5-3	111	15.1438	25.56	7.17E-05	25.56	3412	393.2	14.915	5.7384	655.7	Ref 1
TRIGA STD (ITALY) [467]	0.0119	U-235	- - -	64	Type 5-3	111	15.6428	26.40	7.41E-05	26.40	3304	380.7	14.915	5.5553	634.8	Ref 1
TRIGA STD (SLOVENIA) [468]	0.0116	U-235	- - -	67	Type 5-3	111	12.9180	21.80	6.12E-05	21.80	4000	461.0	14.915	6.7272	768.7	Ref 1
TRIGA STD (AUSTRIA) [469]	0.0056	U-235	- - -	30	Type 5-3	111	13.6640	23.06	6.47E-05	23.06	3763	433.6	14.915	6.3599	726.7	Ref. 1
TRIGA FLIP (BANGLADESH) [470]	0.0461	U-235	- - -	100	Type 5-3	111	29.6819	50.10	1.41E-04	50.09	1732	199.6	14.915	2.9278	334.5	Ref 1; FLIP LEU fuel
TRIGA STD (BRAZIL) [471]	0.0106	U-235	19.81	59	Type 5-3	111	15.3138	25.85	7.25E-05	25.85	3375	388.9	14.915	5.6747	648.4	Ref 1
TRIGA STD (FINLAND) [472]	0.0197	U-235	- - -	102	Type 5-3	111	16.1792	27.31	7.66E-05	27.31	3178	366.2	14.915	5.3712	613.7	Ref. 1
TRIGA STD (HANNOVER) [473]	0.0009	U-235	19.82	5	Type 5-3	111	16.0138	27.03	7.58E-05	27.03	3211	370.0	14.915	5.4267	620.1	Ref. 1
TRIGA STD (GERMANY) [474]	0.0134	U-235	- - -	70	Type 5-3	111	14.6363	24.70	6.93E-05	24.70	3513	404.8	14.915	5.9374	678.4	Ref 1
TRIGA STD (INDONESIA) [475]	0.0333	U-235	- - -	174	Type 5-3	111	15.0283	25.36	7.12E-05	25.36	3421	394.3	14.915	5.7825	660.7	Ref. 1
TRIGA STD (INDONESIA) [476]	0.0136	U-235	- - -	71	Type 5-3	111	15.0283	25.36	7.12E-05	25.36	3421	394.3	14.915	5.7825	660.7	Ref. 1
TRIGA STD (ITALY) [477]	0.0092	U-235	- - -	48	Type 5-3	111	15.0283	25.36	7.12E-05	25.36	3421	394.3	14.915	5.7825	660.7	Ref. 1
TRIGA STD (ITALY) [478]	0.0128	U-235	- - -	71	Type 5-3	111	11.1745	18.86	5.29E-05	18.86	4601	530.2	14.915	7.7768	888.6	Ref 1
TRIGA STD (JAPAN) [479]	0.0141	U-235	- - -	73	Type 5-3	111	16.6119	28.04	7.87E-05	28.04	3095	356.7	14.915	5.2313	597.7	Ref. 1
TRIGA ACPR (JAPAN) [480]	0.0482	U-235	- - -	182	Type 5-3	111	21.6341	36.51	1.02E-04	36.51	2377	273.9	14.915	4.0169	459.0	Ref 1; ACPR
TRIGA STD (JAPAN) [481]	0.0138	U-235	- - -	71	Type 5-3	111	16.4128	27.70	7.77E-05	27.70	3149	362.8	14.915	5.2947	605.0	Ref 1
TRIGA STD (MEXICO) [482]	0.0284	U-235	- - -	151	Type 5-3	111	13.6640	23.06	6.47E-05	23.06	3763	433.6	14.915	6.3599	726.7	Ref 1
TRIGA STD (SO. KOREA) [483]	0.0130	U-235	- - -	69	Type 5-3	111	15.4914	26.15	7.34E-05	26.15	3336	384.4	14.915	5.6096	641.0	Ref. 1
TRIGA STD (SO KOREA) [484]	0.0193	U-235	- - -	104	Type 5-3	111	14.0326	23.68	6.65E-05	23.68	3664	422.2	14.915	6.1928	707.6	Ref. 1
TRIGA STD (ENGLAND) [485]	0.0158	U-235	- - -	84	Type 5-3	111	14.6830	24.78	6.95E-05	24.78	3502	403.5	14.915	5.9185	676.3	Ref. 1
TRIGA STD (ZAIRE) [486]	0.0153	U-235	- - -	80	Type 5-3	111	15.0283	25.36	7.12E-05	25.36	3421	394.3	14.915	5.7825	660.7	Ref 1
TRIGA STD (ZAIRE) [487]	0.0101	U-235	- - -	56	Type 5-3	111	15.3534	25.91	7.27E-05	25.91	3366	387.9	14.915	5.6601	646.7	Ref 1
TRIGA STD (SLOVENIA) [488]	0.0226	U-235	- - -	122	Type 5-3	111	13.3679	22.56	6.33E-05	22.56	3846	443.2	14.915	6.5008	742.8	Ref 1
TRIGA STD (THAILAND) [489]	0.0193	U-235	- - -	100	Type 5-3	111	16.2947	27.50	7.72E-05	27.50	3156	363.6	14.915	5.3331	609.4	Ref 1
TRIGA STD (TURKEY) [490]	0.0152	U-235	- - -	79	Type 5-3	111	16.2947	27.50	7.72E-05	27.50	3156	363.6	14.915	5.3331	609.4	Ref 1
TRIGA FLIP (AUSTRIA) [492]	0.0020	U-235	- - -	10	Type 5-3	111	58.9189	99.44	2.79E-04	99.44	933	107.5	14.915	1.4749	168.5	Ref. 1, 2, 3, FLIP fuel
TRIGA FLIP (MEXICO) [493]	0.0068	U-235	- - -	35	Type 5-3	111	58.8448	99.32	2.79E-04	99.31	934	107.6	14.915	1.4768	168.7	Ref. 1, 2, 3, FLIP fuel
TRIGA FLIP (SO. KOREA) [494]	0.0191	U-235	- - -	114	Type 5-3	111	46.0828	77.78	2.18E-04	77.78	1116	128.6	14.915	1.8858	215.5	Ref 1, 2, 3, FLIP fuel
TRIGA FLIP (SLOVENIA) [495]	0.0047	U-235	- - -	26	Type 5-3	111	51.8651	87.54	2.46E-04	87.53	991	114.2	14.915	1.6755	191.5	Ref. 1, 2, 3; FLIP fuel
TRIGA FLIP (THAILAND) [496]	0.0156	U-235	- - -	36	Type 5-3	111	32.3189	54.55	1.53E-04	54.55	1591	183.3	14.915	2.6889	307.2	Ref 1, FLIP LEU fuel
TRIGA FLIP (MALAYSIA) [497]	0.0465	U-235	- - -	94	Type 5-3	111	42.4027	71.57	2.01E-04	71.56	1213	139.7	14.915	2.0494	234.2	Ref 1; FLIP LEU fuel
TRIGA FLIP (TAIWAN) [498]	0.1186	U-235	20.02	144	Type 5-3	111	70.5270	119.03	3.34E-04	119.03	729	84.0	14.915	1.2322	140.8	Ref 1; FLIP LEU fuel
TRIGA FLIP (PHILIPPINES) [499]	0.1053	U-235	- - -	128	Type 5-3	111	70.5270	119.03	3.34E-04	119.03	729	84.0	14.915	1.2322	140.8	Ref 1, FLIP LEU fuel
TRIGA STD (U OF UTAH) [699]	0.0107	U-235	- - -	63	Type 5-3	111	13.5162	22.81	6.40E-05	22.81	3823	440.6	14.915	6.4294	734.6	Ref 1
TRIGA FLIP FFCR (OSU) [702]	0.0006	U-235	- - -	4	Type 5-2	74	30.2877	51.12	1.43E-04	51.12	1806	208.1	14.915	2.8692	327.8	Ref 1; FLIP FFCR fuel
TRIGA FFCR (MNRC) [703]	0.0008	U-235	- - -	5	Type 5-2	74	6.6932	11.30	3.17E-05	11.30	7645	880.9	14.915	12.9835	1483.5	Ref 1; std FFCR
TRIGA STD (MNRC) [704]	0.0050	U-235	- - -	6	Type 5-3	111	71.1111	120.02	3.37E-04	120.02	723	83.3	14.915	1.2220	139.6	Ref. 1
TRIGA STD (GA) [728]	0.0093	U-235	- - -	52	Type 5-3	111	14.8902	25.13	7.05E-05	25.13	3471	399.9	14.915	5.8361	666.9	Ref 1
TRIGA FLIP (GA) [729]	0.0164	U-235	- - -	111	Type 5-3	111	39.9761	67.47	1.89E-04	67.47	1375	158.4	14.915	2.1738	248.4	Ref. 1, 2, 3, FLIP fuel
TRIGA FFCR (ITALY) [730]	0.0005	U-235	- - -	3	Type 5-2	74	6.4375	10.86	3.05E-05	10.86	7949	915.9	14.915	13.4993	1542.5	Ref 1; std FFCR
TRIGA STD (SOLVENIA) [731]	0.0048	U-235	- - -	10	Type 5-3	111	34.3123	57.91	1.63E-04	57.91	1499	172.7	14.915	2.5327	289.4	Ref. 1
TRIGA FLIP FFCR (SO KOREA) [733]	0.0006	U-235	- - -	4	Type 5-2	74	25.0378	42.26	1.19E-04	42.26	2185	251.8	14.915	3.4708	396.6	Ref 1; FLIP FFCR fuel
TRIGA FFCR (SO KOREA) [734]	0.0005	U-235	- - -	3	Type 5-2	74	8.1921	13.83	3.88E-05	13.83	6246	719.8	14.915	10.6080	1212.1	Ref 1; std FFCR
TRIGA FFCR (ZAIRE) [735]	0.0006	U-235	- - -	4	Type 5-2	74	9.3439	15.77	4.43E-05	15.77	5476	631.0	14.915	9.3004	1062.7	Ref 1; std FFCR

Table A-7. (continued).

Fuel Category: UZrHx	MTHM	Fissile type	^{235}U enrichment	FHU count	Basket design	FHUs per canister (max)	Linear loading	% of baseline fuel	Fissile/atom-density		H/X ratio		Gd	Gd/X atom ratio		
Fuel Name [Fuel ID #]	metric tonnes		%	[units]	(type)	(#)	(g/cm)	(%)	(atom/b-cm) [per canister]	% of baseline fuel	moderator/ fissile atoms	% of baseline fuel	kg (poison) per canister	poison/fissile atoms (per canister)	% of baseline fuel	Notes
TRIGA FFCR (MNRC) [737]	0.0025	U-235	- - -	6	Type 5-2	74	23.4013	39.50	1.11E-04	39.50	2187	252.0	14.915	3.7135	424.3	Ref 1, std FFCR
TRIGA STD (REED COLLEGE) [775]	0.0017	U-235	- - -	9	Type 5-3	111	16.3529	27.67	7.76E-05	27.67	3137	361.4	14.915	5.3012	605.7	Ref 1
TRIGA STD (ARRR) [780]	0.0082	U-235	- - -	15	Type 5-3	111	40.1216	67.72	1.90E-04	67.71	1282	147.7	14.915	2.1659	247.5	Ref. 1
TRIGA STD (KSU) [804]	0.0005	U-235	- - -	3	Type 5-3	111	13.5105	22.80	6.40E-05	22.80	3825	440.8	14.915	6.4322	735.0	Ref. 1
TRIGA FFCR (PENN. STATE UNIV.) [815]	0.0013	U-235	- - -	7	Type 5-2	74	9.4530	16.02	4.50E-05	16.02	5390	621.1	14.915	9.1542	1046.0	Ref 1; std FFCR
TRIGA FLIP (DAMAGED) (SO KOREA) [819]	0.0006	U-235	- - -	4	Type 5-3	111	25.6061	43.22	1.21E-04	43.22	2008	231.4	14.915	3.3938	387.8	Ref. 1, 2, 3; FLIP fuel
TRIGA STD (FE) (UC-IRVINE) [824]	0.0009	U-235	- - -	5	Type 5-3	111	15.8649	26.78	7.51E-05	26.78	3219	371.0	14.915	5.4776	625.9	Ref. 1
TRIGA FFCR (U OF TX AUSTIN) [825]	0.0005	U-235	- - -	3	Type 5-2	74	9.1344	15.42	4.33E-05	15.42	5602	645.5	14.915	9.5136	1087.1	Ref. 1; std FFCR
TRIGA FLIP (DAMAGED) (TEXAS A&M) [844]	0.0008	U-235	- - -	5	Type 5-3	111	46.4679	78.46	2.20E-04	78.46	1182	136.2	14.915	1.8693	213.6	Ref 1, 2, 3, FLIP fuel
TRIGA STD (GA) [870]	0.0452	U-235	- - -	246	Type 5-3	111	15.6890	26.48	7.43E-05	26.48	3294	379.6	14.915	5.5390	632.9	Ref. 1
TRIGA STD (KSU) [871]	0.0112	U-235	- - -	61	Type 5-3	111	15.6890	26.48	7.43E-05	26.48	3294	379.6	14.915	5.5390	632.9	Ref. 1
TRIGA STD (MSU) [873]	0.0083	U-235	- - -	48	Type 5-3	111	14.1184	23.83	6.69E-05	23.83	3642	419.7	14.915	6.1552	703.3	Ref 1
TRIGA STD (UC BERKLEY) [874]	0.0192	U-235	- - -	111	Type 5-3	111	14.1184	23.83	6.69E-05	23.83	3642	419.7	14.915	6.1552	703.3	Ref. 1
TRIGA STD (HANFORD) [876]	0.0108	U-235	- - -	58	Type 5-3	111	15.6890	26.48	7.43E-05	26.48	3294	379.6	14.915	5.5390	632.9	Ref 1
TRIGA STD (UNIV. OF TEXAS) [877]	0.0127	U-235	- - -	69	Type 5-3	111	15.6890	26.48	7.43E-05	26.48	3294	379.6	14.915	5.5390	632.9	Ref 1
TRIGA STD (MSU) [878]	0.0107	U-235	- - -	58	Type 5-3	111	15.6890	26.48	7.43E-05	26.48	3294	379.6	14.915	5.5390	632.9	Ref 1
TRIGA FLIP ANL-W (NRAD) [884]	0.0106	U-235	- - -	61	Type 5-3	111	52.2650	88.24	2.48E-04	88.24	1051	121.1	14.915	1.6621	189.9	Ref. 1, 2, 3, FLIP fuel
TRIGA STD (ACPR) [895]	0.0484	U-235	- - -	182	Type 5-3	111	22.9321	38.70	1.09E-04	38.70	2242	258.4	14.915	3.7895	433.0	Ref 1
TRIGA STD (FE) (ITALY) [929]	0.0004	U-235	- - -	2	Type 5-3	111	13.9470	23.54	6.61E-05	23.54	3662	422.0	14.915	6.2308	712.0	Ref. 1
TRIGA HIGH POWER (ROMANIA) [930]	0.0056	U-235	- - -	267	Type 5-3	111	7.7773	13.13	3.68E-05	13.13	8052	927.8	14.915	11.1738	1276.7	Ref. 1; Hi-power
TRIGA ACPR (SLOVENIA) [932]	0.0003	U-235	19.88	1	Type 5-3	111	23.9539	40.43	1.13E-04	40.43	2147	247.4	14.915	3.6279	414.5	Ref 1; ACPR
TRIGA FFCR (SLOVENIA) [941]	0.0005	U-235	- - -	3	Type 5-2	74	7.4801	12.62	3.54E-05	12.62	6841	788.3	14.915	11.6176	1327.5	Ref. 1; std FFCR
TRIGA STD (USGS) [964]	0.0002	U-235	19.62	1	Type 5-3	111	15.5234	26.20	7.35E-05	26.20	3312	381.7	14.915	5.5981	639.7	Ref 1
TRIGA FFCR (AFRRI) [969]	0.0003	U-235	- - -	3	Type 5-2	74	2.9807	5.03	1.41E-05	5.03	17167	1978.2	14.915	29.1549	3331.3	Ref 1; std? FFCR
TRIGA STD (DOW) [970]	0.0002	U-235	19.72	1	Type 5-3	111	15.1570	25.58	7.18E-05	25.58	3409	392.9	14.915	5.7334	655.1	Ref. 1
TRIGA (DEMOUNTABLE) (U OF AZ) [971]	0.0002	U-235	19.49	1	Type 5-3	111	15.1438	25.56	7.17E-05	25.56	3395	391.3	14.915	5.7384	655.7	Ref. 1
TRIGA STD (FE) (U OF AZ) [972]	0.0002	U-235	- - -	1	Type 5-3	111	16.0092	27.02	7.58E-05	27.02	3190	367.6	14.915	5.4282	620.2	Ref. 1
TRIGA STD (FE) (U OF AZ) [973]	0.0004	U-235	- - -	2	Type 5-3	111	16.3337	27.57	7.74E-05	27.57	3127	360.3	14.915	5.3204	607.9	Ref 1
TRIGA FFCR (U OF AZ) [974]	0.0003	U-235	- - -	2	Type 5-2	74	9.1195	15.39	4.32E-05	15.39	5611	646.6	14.915	9.5292	1088.8	Ref. 1; std FFCR
TRIGA STD (U OF AZ) [975]	0.0015	U-235	- - -	8	Type 5-3	111	14.8896	25.13	7.05E-05	25.13	3453	397.9	14.915	5.8364	666.9	Ref 1
TRIGA FFCR (ENGLAND) [987]	0.0006	U-235	- - -	4	Type 5-2	74	7.9707	13.45	3.78E-05	13.45	6420	739.7	14.915	10.9026	1245.8	Ref. 1; std FFCR
TRIGA 20/30 (GA) [995]	0.0167	U-235	17.12	22	Type 5-3	111	57.1644	96.48	2.71E-04	96.48	899	103.7	14.915	1.5202	173.7	Ref 1; FLIP-LEU fuel
TRIGA FLIP FFCR (GA) [996]	0.0006	U-235	- - -	6	Type 5-2	74	16.4860	27.82	7.81E-05	27.82	3318	382.4	14.915	5.2712	602.3	Ref 1; FLIP FFCR fuel
TRIGA HIGH POWER (GA) [998]	0.0001	U-235	93.15	4	Type 5-3	111	11.7559	19.84	5.57E-05	19.84	5031	579.7	14.915	7.3921	844.6	Ref 1; Hi-Power

Table A-7. (continued).

Fuel Category: UZrHx	MTHM	Fissile type	e2x enrichment	FHD count	Basket design	FHDs per canister (max)	Linear loading	% of baseline fuel	Fissile/atom-density		H/X ratio		Gd	Gd/X atom ratio		
Fuel Name [Fuel ID #]	metric tonnes		%	[units]	(type)	(#)	(g/cm)	(%)	(atom/b-cm) [per canister]	% of baseline fuel	moderator/ fissile atoms	% of baseline fuel	kg (poison) per canister	poison/fissile atoms (per canister)	% of baseline fuel	Notes
TRIGA ACPR PENN STATE UNIV. [1002]	0.0120	U-235	- - -	46	Type 5-3	111	21.6773	36.59	1.03E-04	36.59	2372	273.3	14.915	4.0089	458.1	Ref 1; ACPR
TRIGA FFCR (GA) [1003]	0.0015	U-235	- - -	10	Type 5-2	74	7.2521	12.24	3.43E-05	12.24	7056	813.0	14.915	11.9829	1369.2	Ref 1; std FFCR
TRIGA FLIP UNIV OF WISCONSIN [1035]	0.0016	U-235	- - -	9	Type 5-3	111	52.8832	89.25	2.50E-04	89.25	1039	119.7	14.915	1.6433	187.8	Ref 1, 2, 3; FLIP fuel
TRIGA FFCR (OSU) [1039]	0.0005	U-235	- - -	3	Type 5-2	74	8.7257	14.73	4.13E-05	14.73	5864	675.7	14.915	9.9592	1138.0	Ref 1; std FFCR
TRIGA STD (IFE) (OSU) [1040]	0.0004	U-235	- - -	2	Type 5-3	111	16.0092	27.02	7.58E-05	27.02	3190	367.6	14.915	5.4262	620.2	Ref 1
TRIGA FFCR (OSU) [1041]	0.0004	U-235	- - -	2	Type 5-2	74	36.3452	61.34	1.72E-04	61.34	1505	173.4	14.915	2.3910	273.2	Ref 1; FLIP FFCR fuel
TRIGA STD (IFE) (ENGLAND) [1043]	0.0004	U-235	- - -	2	Type 5-3	111	14.0416	23.70	6.65E-05	23.70	3638	419.2	14.915	6.1889	707.2	Ref. 1
TRIGA STD (HEIDELBERG) [1044]	0.0106	U-235	- - -	56	Type 5-3	111	14.8069	24.99	7.01E-05	24.99	3473	400.2	14.915	5.8690	670.6	Ref 1
TRIGA FFCR (HEIDELBERG) [1045]	0.0008	U-235	- - -	5	Type 5-2	74	8.3524	14.10	3.96E-05	14.10	6126	705.9	14.915	10.4043	1188.8	Ref. 1; std FFCR
TRIGA STD (CORNELL) [1047]	0.0013	U-235	19.81	7	Type 5-3	111	15.4314	26.04	7.31E-05	26.04	3349	385.9	14.915	5.6314	643.5	Ref 1
TRIGA STD (IFE) (U OF IL) [1048]	0.0015	U-235	20.00	8	Type 5-3	111	16.4075	27.69	7.77E-05	27.69	3113	358.7	14.915	5.2964	605.2	Ref. 1
TRIGA FFCR (UC-IRVINE) [1050]	0.0004	U-235	- - -	2	Type 5-2	74	10.4625	17.66	4.96E-05	17.66	4891	563.6	14.915	8.3060	949.1	Ref. 1; std FFCR
TRIGA STD (IFE) (UC-IRVINE) [1051]	0.0002	U-235	- - -	1	Type 5-3	111	15.6938	26.49	7.43E-05	26.49	3255	375.0	14.915	5.5373	632.7	Ref. 1
TRIGA FFCR (UC-IRVINE) [1052]	0.0002	U-235	- - -	1	Type 5-2	74	10.5766	17.85	5.01E-05	17.85	4838	557.5	14.915	8.2164	938.8	Ref. 1; std FFCR
TRIGA STD (MNRC) [1053]	0.0040	U-235	- - -	8	Type 5-3	111	42.5333	71.79	2.01E-04	71.78	1209	139.3	14.915	2.0431	233.5	Ref 1
TRIGA STD (MNRC) [1054]	0.0406	U-235	- - -	84	Type 5-3	111	37.9794	64.10	1.80E-04	64.10	1354	156.0	14.915	2.2881	261.4	Ref 1
TRIGA FFCR (MNRC) [1055]	0.0007	U-235	- - -	1	Type 5-2	74	38.4336	64.87	1.82E-04	64.87	1331	153.4	14.915	2.2611	258.4	Ref. 1; std FFCR
TRIGA STD (BRAZIL) [1063]	0.0017	U-235	20.00	9	Type 5-3	111	16.1792	27.31	7.66E-05	27.31	3178	366.2	14.915	5.3712	613.7	Ref 1
TRIGA ACPR (ROMANIA) [1077]	0.0144	U-235	19.90	75	Type 5-3	111	15.1973	25.65	7.20E-05	25.65	3383	389.9	14.915	5.7182	653.4	Ref 1; ACPR
TRIGA STD (ROMANIA) [1078]	0.1215	U-235	19.90	498	Type 5-3	111	19.2794	32.54	9.13E-05	32.54	2667	307.3	14.915	4.5075	515.0	Ref 1
TRIGA STD (SLOVENIA) [1079]	0.0274	U-235	19.89	149	Type 5-3	111	12.9514	21.86	6.13E-05	21.86	3970	457.5	14.915	6.7098	766.7	Ref. 1
TRIGA STD (ITALY) [1080]	0.0253	U-235	20.03	140	Type 5-3	111	11.1745	18.86	5.29E-05	18.86	4601	530.2	14.915	7.7768	888.6	Ref 1

References:

1. SNF database, Version 5.0.1
2. TRIGA (UZrH) Fuel Characteristics for Disposal Criticality Analysis, DOE/SNF/REP-048 Rev. 0, June 1999
3. TRIGA Fuel Phase I and II Criticality Calculation, CAL-MGR-NU-000001, Rev.0 0, MOL.19991209.0195
4. Evaluation of Codisposal Viability for UZrH (TRIGA) DOE-Owned Fuel, TDR-EDC-NU-000001 Rev. 00, January 2000
5. Preliminary Design Specification for Department of Energy Standardized Spent Nuclear Fuel Canisters: Volume 1 - Design Specification, DOE/SNF/REP-011, Rev. 3, August 1999

Table A-8. HEU oxide fuel category.

Fuel Category: HEU oxide	MTHM	Fissile type	BOL enrich (nom)	FHU count	Basket design	FHUs per canister (max)	Linear loading	% of baseline fuel	Fissile atom density		H/X atom ratio		Gd	Gd/X atom ratio		
Fuel Name [Fuel ID #]	metric tonnes		%	[unit]	(type)	(#)	(g/cm)	(%)	(atom/b-cm) [per canister]	% of baseline fuel	moderator/ fissile atoms (per canister)	% of baseline fuel	kg (poison) per canister	poison/fissile atoms (per canister)	% of baseline fuel	Notes
Baseline Fuel																
SHIPPINGPORT PWR-C2-S2	---	U-235	93.00	20	Type 6a	1	43.896	100	7.459E-05	100	725	100	---	---	---	Ref 1, 2, 3, 4
APPR (AGE-2) [6]	0.0002	U-235	92.99	1	TBD	TBD	TBD	TBD	TBD	TBD	TBD	TBD	TBD	TBD	TBD	Ref 1
BMI (CPI-38) [20]	0.0013	U-235		1	TBD	TBD	TBD	TBD	TBD	TBD	TBD	TBD	TBD	TBD	TBD	Ref 1
BORAX V (SUPERHEATER) [22]	0.0208	U-235	93.15	36	Type 1a-3	30	62.807	74.24	1.067E-04	74.22	384	163.5	7.21	0.669	134.7	Ref 1
BSR [31]	0.0069	U-235	93.23	41	Type 1a-2	20	11.959	14.02	2.015E-05	14.01	2344	998.2	7.21	3.543	713.4	Ref 1
DRESII, HBR, BR-3, BRP, TMI [50]	0.0195	U-235		1	TBD	TBD	TBD	TBD	TBD	TBD	TBD	TBD	TBD	TBD	TBD	Ref 1
EBWR [65]	1.6035	U-235		61	Type 1a-1	10	61.134	72.26	1.039E-04	72.24	455	194.0	7.21	0.687	138.4	Ref 1
GCRE CAN (1B-8T 1&2) [94]	0.0009	U-235	93.28	1	TBD	TBD	TBD	TBD	TBD	TBD	TBD	TBD	TBD	TBD	TBD	Ref 1
GCRE PELLETS (1B-7T-1) [95]	0.0001	U-235	93.10	1	TBD	TBD	TBD	TBD	TBD	TBD	TBD	TBD	TBD	TBD	TBD	Ref 1
GETR FILTERS [98]	0.0044	U-235		70	Type 6d-4	16	3.636	100.00	6.179E-06	100.00	6989	100.0	TBD	TBD	TBD	Ref.1, baseline for Type 6d
HFBR [102]	0.0581	U-235		220	Type 1a-3	30	24.700	29.20	4.197E-05	29.19	1087	463.1	7.21	1.701	342.5	Ref.1
HFIR (INNER) [103]	0.9294	U-235	93.14	437	Type 6a	3	21.558	49.11	3.663E-05	49.11	1333	183.9	TBD	TBD	TBD	Ref 1
HTRE (ANP) [105]	0.0040	U-235	93.15	13	TBD	TBD	TBD	TBD	TBD	TBD	TBD	TBD	TBD	TBD	TBD	Ref 1
ML-1 (GCRE) [137]	0.0583	U-235	93.14	67	Type 1a-3	30	94.731	111.97	1.610E-04	111.94	312	132.8	7.21	0.444	89.3	Ref 1
NIST [154]	0.1597	U-235	93.33	980	Type 1a-3	30	11.813	13.96	2.007E-05	13.96	2176	926.7	7.21	3.557	716.2	Ref 1
ORR SPECIAL [163]	0.0185	U-235		11	Type 3-2	10	6.420	5.47	1.091E-05	5.47	4748	1478.6	9.29	8.432	2951.3	Ref 1
PATHFINDER (SUPERHEATER) [166]	0.0526	U-235	93.15	411	Type 5-1	37	17.021	28.73	2.892E-05	10.31	1609	501.0	8.90	3.047	348.1	Ref 1
PBF DRIVER CORE [167]	0.5616	U-235		2425	Type 5-2	74	12.237	20.66	2.079E-05	7.41	2282	710.7	8.90	4.238	484.2	Ref 1
PULSTAR - BUFFALO [174]	0.2522	U-235	6.00	24	Type 1a-2	20	41.641	49.22	7.076E-05	49.21	672	266.1	7.21	1.009	203.2	Ref 1
SHIPPINGPORT PWR-C2-S1 [195]	0.2200	U-235		19	Type 6a	1	19.336	44.05	3.286E-05	44.05	1756	242.3	---	---	---	Ref 1, 2, 3, 4
SHIPPINGPORT PWR-C2-S2 [196]	0.3016	U-235		20	Type 6a	1	29.443	67.07	5.003E-05	67.07	1153	159.1	---	---	---	Ref 1, 2, 3, 4
SM-1A [201]	0.0658	U-235		93	Type 1a-2	20	47.485	56.13	8.069E-05	56.11	603	256.7	7.21	0.885	178.2	Ref 1
SPERT-III [209]	0.0097	U-235		3	TBD	TBD	TBD	TBD	TBD	TBD	TBD	TBD	TBD	TBD	TBD	Ref 1
SPSS (SPERT) [213]	0.0006	U-235	93.05	1	TBD	TBD	TBD	TBD	TBD	TBD	TBD	TBD	TBD	TBD	TBD	Ref 1
TORY-IIA [230]	0.0486	U-235	93.18	146	TBD	TBD	TBD	TBD	TBD	TBD	TBD	TBD	TBD	TBD	TBD	Ref 1
TORY-IIC [231]	0.0591	U-235	93.15	665	TBD	TBD	TBD	TBD	TBD	TBD	TBD	TBD	TBD	TBD	TBD	Ref 1
TREAT DRIVER [232]	0.0152	U-235	92.50	391	TBD	TBD	TBD	TBD	TBD	TBD	TBD	TBD	TBD	TBD	TBD	Ref 1
VBWR (GENEVA) [265]	0.0124	U-235		4	TBD	TBD	TBD	TBD	TBD	TBD	TBD	TBD	TBD	TBD	TBD	Ref 1
RSG-GAS (INDONESIA) [288]	0.0515	U-235		47	Type 1a-2	20	9.406	11.12	1.598E-05	11.12	2883	1228.0	7.21	4.467	899.5	Ref 1
FRR TARGET (ARGENTINA) [297]	0.0040	U-235		48	TBD	TBD	TBD	TBD	TBD	TBD	TBD	TBD	TBD	TBD	TBD	Ref 1
BR-3 FUEL [340]	0.0071	U-235		16	Type 5-2	74	6.723	11.36	1.142E-05	4.07	4444	511.94	8.90	7.714	881.4	Ref 1
RESIDUE FAILED PBF RODS [381]	0.0011	U-235		1	TBD	TBD	TBD	TBD	TBD	TBD	TBD	TBD	TBD	TBD	TBD	Ref 1
OMEGA WEST (204) [406]	0.0026	U-235	93.14	16	Type 1a-2	20	10.575	12.50	1.797E-05	12.50	2475	1054.0	7.21	3.973	800.1	Ref 1
OMEGA WEST (236) [407]	0.0073	U-235	93.22	44	Type 1a-2	20	10.667	12.61	1.813E-05	12.61	2453	1044.8	7.21	3.939	793.1	Ref 1
OMEGA WEST (250) [408]	0.0052	U-235		27	Type 1a-2	20	13.123	15.51	2.230E-05	15.51	1994	849.3	7.21	3.202	644.7	Ref 1
PNL MIXED MATERIAL EXP DCC-1 [430]	0.0236	U-235		1	Type 6b	1	5.968	9.61	1.014E-05	17.08	5525	743.1	TBD	TBD	TBD	Ref 1
PNL MIXED MATERIAL EXP DCC-2 [431]	0.0206	U-235		1	Type 6b	1	5.241	8.44	8.908E-06	15.00	6292	846.2	TBD	TBD	TBD	Ref 1
PNL MIXED MATERIAL EXP DCC-3 [432]	0.0204	U-235		1	Type 6b	1	5.316	8.56	9.034E-06	15.21	6203	834.2	TBD	TBD	TBD	Ref 1
ANP [451]	0.0011	U-235	93.20	9	Type 1a-3	30	13.333	15.76	2.266E-05	15.76	2280	971.2	7.21	3.151	634.5	Ref 1
ORR [461]	0.0033	U-235		17	Type 1a-3	30	17.867	21.12	3.036E-05	21.11	1459	621.5	7.21	2.352	473.5	Ref 1
FRR MTR-S (INDONESIA) [502]	0.1598	U-235		142	Type 1a-2	20	9.747	11.52	1.656E-05	11.52	2877	1225.3	7.21	4.311	868.1	Ref 1
FRR MTR-C (PERU) [503]	0.0057	U-235		6	Type 1a-2	20	8.187	9.66	1.391E-05	9.67	3425	1458.7	7.21	5.132	1033.4	Ref 1
FRR MTR-S (PERU) [504]	0.0290	U-235		23	Type 1a-2	20	10.916	12.90	1.855E-05	12.90	2569	1094.0	7.21	3.849	775.0	Ref 1
FRR ASTRA (AUSTRIA) [556]	0.0070	U-235		4	Type 1a-2	20	27.064	31.99	4.599E-05	31.98	1037	441.5	7.21	1.552	312.6	Ref 1
FRG-1 (GERMANY) [581]	0.0086	U-235		7	Type 1a-2	20	9.302	11.00	1.581E-05	10.99	3288	1400.9	7.21	4.517	909.6	Ref 1
FRR TARGET (CANADA) [671]	0.4922	U-235		5952	TBD	TBD	TBD	TBD	TBD	TBD	TBD	TBD	TBD	TBD	TBD	Ref 1
FRR TARGET (INDONESIA) [672]	0.0040	U-235		48	TBD	TBD	TBD	TBD	TBD	TBD	TBD	TBD	TBD	TBD	TBD	Ref 1
HFBR [706]	0.2822	U-235		1050	Type 1a-3	30	25.355	29.97	4.309E-05	29.96	1094	466.8	7.21	1.667	333.7	Ref 1
HFIR (OUTER) [707]	0.3518	U-235	93.14	59	Type 6b	3	62.127	100.00	5.938E-05	100.00	744	100.0	TBD	TBD	TBD	Ref 1, 5 baseline for Type 6b
EBWR (FUEL FOLLOWER) [740]	0.0017	U-235	93.64	4	TBD	TBD	TBD	TBD	TBD	TBD	TBD	TBD	TBD	TBD	TBD	Ref 1
GCRE (1B SERIES) [745]	0.0599	U-235	92.20	69	Type 1a-3	30	92.398	109.22	1.570E-04	109.19	320	136.2	7.21	0.455	91.6	Ref 1
NIST [752]	0.0339	U-235	93.17	420	Type 1a-3	30	6.171	7.29	1.049E-05	7.29	4166	1773.9	7.21	6.808	1371.0	Ref 1
ORR [753]	0.0003	U-235		4	Type 1a-3	30	5.231	6.18	8.889E-06	6.18	5058	2154.3	7.21	8.032	1617.4	Ref 1

Table A-8. (continued).

Fuel Category: HEU oxide	MTHM	Fissile type	BOL enrich (max)	FHU count	Basket design	FHUs per canister (max)	Linear loading	% of baseline fuel	Fissile/atom-density		H/X ratio		Gd	Gd/X atom ratio		
Fuel Name [Fuel ID #]	metric tonnes		%	[unit]	(type)	(#)	(g/cm)	(%)	(atom/b-cm) [per canister]	% of baseline fuel	moderator/ fissile atoms (per canister)	% of baseline fuel	kg (poison) per canister	poison/fissile atoms (per canister)	% of baseline fuel	Notes
ACRR (PULSED CORE) [757]	0.1208	U-235		251	Type 1a-3	30	11.217	13.26	1.906E-05	13.25	2783	1186.3	7.21	3.746	754.3	Ref 1
BMI (CPI-24) [774]	0.0006	U-235		2	TBD	TBD	TBD	TBD	TBD	TBD	TBD	TBD	TBD	TBD	TBD	Ref 1
SP-100 FUEL [777]	0.0026	U-235	18.00	2	Type 7-2	8	7.610	TBD	1.293E-05	TBD	3840	TDB	TBD	TBD	TBD	Ref 1
SAXTON [788]	0.0415	U-235		9	Type 5-2	74	91.132	150.81	1.549E-04	55.21	328	37.78	8.90	0.569	65.0	Ref 1
PATHFINDER (SUPERHEATER) [814]	0.0008	U-235	93.15	6	Type 5-1	37	17.887	30.19	3.039E-05	10.34	1531	176.38	8.90	2.900	331.3	Ref 1
ROVER (UBM) [840]	0.1198	U-235	93.02	65	TBD	TBD	TBD	TBD	TBD	TBD	TBD	TBD	TBD	TBD	TBD	Ref 1
VBWR [855]	0.0040	U-235		7	Type 5-2	111	57.864	97.66	9.833E-05	35.05	497	57.26	8.90	0.896	103.6	Ref 1
SAXTON [882]	0.0104	U-235		20	Type 5-2	111	12.379	20.89	2.103E-05	7.50	2390	275.39	8.90	4.190	478.7	Ref 1
EBWR (SPIKES) [891]	0.0270	U-235		31	Type 1a-1	10	31.395	37.11	5.335E-05	37.10	914	389.2	7.21	1.338	269.5	Ref 1
ORR [903]	0.0208	U-235		97	Type 1a-3	30	20.683	24.45	3.515E-05	24.44	1282	546.0	7.21	2.031	409.1	Ref 1
GCRE (1Z SERIES) [916]	0.0010	U-235	93.67	3	Type 1a-3	30	36.931	43.65	6.276E-05	43.54	719	306.4	7.21	1.138	229.1	Ref 1
LOFT CENTER FUEL MODULE FP-2 REMAINS [923]	0.0999	U-235	9.74	10	TBD	TBD	TBD	TBD	TBD	TBD	TBD	TBD	TBD	TBD	TBD	Ref 1
LOFT FUEL RODS [924]	0.0019	U-235		2	Type 5-1	10	2.144	3.62	3.644E-06	1.30	14177	1633.34	8.90	24.187	2795.6	Ref 1
BR-3 [927]	0.0051	U-235		16	Type 5-2	20	7.897	13.33	1.342E-05	4.78	3838	442.16	8.90	6.567	759.1	Ref 1
HFBR [961]	0.0053	U-235		20	Type 1a-3	30	24.700	29.20	4.197E-05	29.19	1179	502.0	7.21	1.701	343	Ref 1
ASTRA (AUSTRIA) [1058]	0.0048	U-235	19.50	3	Type 1a-3	30	16.848	15.92	2.863E-05	19.91	1683	717.0	7.21	2.494	502	Ref 1
MTR CANAL SCRAP [1062]	0.2660	U-235		105	Type 6a	1	0.828	1.89	1.408E-06	1.39	44250	6105.5	TBD	TBD	TBD	Ref 1
HFIR (INNER) [1083]	0.1252	U-235	93.14	59	Type 6a	3	21.515	49.01	3.656E-05	49.01	1336	184.3	TBD	TBD	TBD	Ref 1
HFIR (OUTER) [1084]	2.6103	U-235	93.14	437	Type 6c	3	62.236	100.00	5.949E-05	100.00	742	100.00	TBD	TBD	TBD	Ref 1, 5, baseline for Type 6c

References.

1. SNF database, Version 5.0.1
2. Shippingport PWR (HEU Oxide) Fuel Characteristics for Disposal Criticality Analysis, DOE/SNF/REP-040, Rev. 0, April 1999
d Degraded Criticality Calculations for the Codisposal of Shippingport PWR Fuel in a Waste Package, CAL-EDC-NU-000002 Rev. 00, MOL.20000209.0233
4. Evaluation of Codisposal Viability for HEU Oxide (Shippingport PWR) DOE-Owned Fuel, TDR-EDC-NU-000003 Rev. 00, February 2000
5. Analysis of Alternative Waste Forms: Phase 2 Report, TDR-CRW-MD-000004 Rev. 00, August 2003
gn Specification for Department of Energy Standardized Spent Nuclear Fuel Canisters Volume 1 - Design Specification, DOE/SNF/REP-011, Rev. 3, August 1999

Table A-9. U-Th oxide fuel category.

Fuel Category: U/Th oxide	MTHM	Fissile type	B2L enrichment	FHU count	Basket design	FHUs per canister (max)	Linear loading	% of baseline fuel	Fissile/atom-density		H/X atom ratio		Gd	Gd/X atom ratio		
Fuel Name [Fuel ID #]	metric tonnes		%		(type)	(#)	(g/cm)	(%)	(atom/b-cm) (per canister)	% of baseline fuel	moderator/ fissile atoms (per canister)	% of baseline fuel	kg (poison) per canister	poison/fissile atoms (per canister)	% of baseline fuel	Notes
Baseline Fuel																
SHIPPINGPORT LWBR SEED[2]	- - -	U-233	100%	12	Type 7	1	40.6985	100	6.916E-05	100.00	735.6	100.00	5.03	0.4462	100	Ref 1, 2, 3, 4, 6
SHIPPINGPORT LWBR BLKT I [2]	- - -	U-233	NR	3	center	1	39.8130	97.8	3.81E-05	55.03	1189.1	161.66	TBD	TBD	TBD	Ref 1, 2, 5, 6
SHIPPINGPORT LWBR BLKT II [2]	- - -	U-233	NR	3	center	1	61.5157	151.1	5.88E-05	85.02	690.8	93.92	TBD	TBD	TBD	Ref 1, 2, 5, 6
SHIPPINGPORT LWBR BLKT III [2]	- - -	U-233	NR	6	center	1	73.4498	180.5	7.02E-05	101.52	581.1	78.99	TBD	TBD	TBD	Ref 1, 2, 5, 6
Other Fuels																
DRESDEN I [44]	2.545	U-235	NR	34	none	1	3.7714	9.3	3.60E-06	5.21	15959.0	2169.58	TBD	TBD	TBD	Ref. 1
ERR [68]	5.033	U-235	92.95	190	Type 1a-1	10	41.3141	48.8	7.02E-06	4.88	824.3	112.07	7.21	1.0170	193.89	Ref. 1
SHIPPINGPORT LWBR REFLCT. IV [371]	11.491	U-233	NR	9	none	1	6.8176	16.8	6.52E-06	9.42	7675.4	1043.45	TBD	TBD	TBD	Ref. 1
SHIPPINGPORT LWBR REFLCT. V [372]	5.845	U-233	NR	6	none	1	3.9149	9.6	3.74E-06	5.41	16798.5	2282.35	TBD	TBD	TBD	Ref. 1
SHIPPINGPORT LWBR BLKT I [374]	3.755	U-233	98.39	3	center	1	47.6841	117.2	4.56E-05	65.90	992.8	134.97	TBD	TBD	TBD	Ref. 1, 2, 5
SHIPPINGPORT LWBR BLKT II [375]	4.332	U-233	98.24	3	center	1	59.7208	146.7	5.71E-05	82.54	711.6	96.74	TBD	TBD	TBD	Ref. 1, 2, 5
SHIPPINGPORT LWBR BLKT III [376]	8.701	U-233	NR	6	center	1	63.6771	156.5	6.09E-05	88.01	670.2	91.12	TBD	TBD	TBD	Ref. 1, 2, 5
SHIPPINGPORT LWBR SCRAP [377]	3.122	U-233	98.23	7	TBD	TBD	TBD	TBD	TBD	TBD	TBD	TBD	TBD	TBD	TBD	Ref. 1
SHIPPINGPORT LWBR SCRAP (LINER 15718) [379]	0.243	U-233	NR	1	TBD	TBD	TBD	TBD	TBD	TBD	TBD	TBD	TBD	TBD	TBD	Ref. 1
SHIPPINGPORT LWBR SEED [380]	5.111	U-233	NR	12	7	1	30.3170	74.6	5.16E-05	74.57	986.5	134.11	5.03	0.5984	114.09	Ref. 1, 2, 3, 4
FAST REACTOR FUEL [906]	0.009	U-235	9.87	1	TBD	TBD	TBD	TBD	TBD	TBD	TBD	TBD	TBD	TBD	TBD	Ref. 1
ERR [1057]	0.004	U-235	93.09	4	Type 1a-1	10	1.6137	1.9	2.74E-07	0.19	21658.7	2944.44	7.21	26.0371	4964.18	Ref. 1
SHIPPINGPORT (MET MOUNTS) [1087]	0.00005	NR	NR	1	TBD	TBD	TBD	TBD	TBD	TBD	TBD	TBD	TBD	TBD	TBD	Ref. 1

References:

1. SNF database, Version 5.0.1
2. Fuel Summary Report. Shippingport Light Water Breeder Reactor, Rev. 2, Olson et. al., Sept 2002
3. Intact and Degraded Criticality Calculations for the Codisposal of Shippingport LWBR Fuel in a Waste Package, CAL-EDC-NI-000002 Rev. 00, MOL.20000209.0233
4. Evaluation of Codisposal Viability for Th/U Oxide (Shippingport LWBR DOE-Owned Fuel, TDR-EDC-NU-000003 Rev. 00, Sept 2000
5. (criticality analysis in progress for power flattening blankets)
6. Preliminary Design Specification for Department of Energy Standardized Spent Nuclear Fuel Canisters: Volume 1 - Design Specification, DOE/SNF/REP-011, Rev. 3, August 1999

Table A-10. U-Th carbide fuel category.

Fuel Category: Th-U carbide	MTHM	Fissile type	^{235}U enrichment	FHU count	Basket design	FHUs per canister (max)	Linear loading	% of baseline fuel	Fissile/atom-density		H/X atom ratio		Gd	Gd/X atom ratio		
Fuel Name	metric tonnes		%	[unit]	(type)	(#)	(g/cm)	(%)	(atom/b-cm) [per canister]	% of baseline fuel	moderator/ fissile atoms (per canister)	% of baseline fuel	kg (poison) per canister	poison/fissile atoms (per canister)	% of baseline fuel	Notes
Baseline Fuel																
surrogate FSVR	- - -	U-235	100.00	- - -	none	5	17.9339	100.00	3.066E-05	100.00	917.3	100.00	none	- - -	- - -	Ref 1, 2 7
Other Fuels																
EBR-II, FFTF & MTR EXPERIMENTS	0.004	Pu-239?	87.35	1	TBD	TBD	TBD	TBD	TBD	TBD	TBD	TBD	TBD	TBD	TBD	Ref. 1, 7
FSVR	8.6262	U-235	84.62	744	none	5	4.1946	23.39	7.172E-06	23.39	3922.1	427.55	none	- - -	- - -	Ref. 1, 2 7
FSVR	14.7259	U-235	79.30	1464	none	5	5.3062	29.59	9.072E-06	29.59	3100.4	337.98	none	- - -	- - -	Ref. 1, 2 7
GA HTGR FUEL	0.0021	U-235	80.89	2	TBD	TBD	TBD	TBD	TBD	TBD	TBD	TBD	TBD	TBD	TBD	Ref 1, 7
PEACH BOTTOM UNIT I CORE I	0.0034	U-235	91.01	2	Type 1a-1	10	6.1108	34.07	1.045E-05	34.07	3769.9	413.15	none	- - -	- - -	Ref 1, 3 5, 6, 7
PEACH BOTTOM UNIT I CORE I	1.6465	U-235	85.91	814	Type 1a-1	10	5.2666	29.37	9.005E-06	29.37	4397.4	479.37	none	- - -	- - -	Ref. 1, 3 5, 6, 7
PEACH BOTTOM UNIT I CORE II	1.2812	U-235	73.85	787	Type 1a-1	10	2.8292	15.78	4.837E-06	15.78	8868.1	966.72	none	- - -	- - -	Ref 1, 3 5, 6, 7
PEACH BOTTOM UNIT I CORE II (INTACT)	0.0107	U-235	76.48	9	Type 1a-1	10	2.4993	13.94	4.273E-06	13.94	10039.0	1094.36	none	- - -	- - -	Ref. 1, 3 5, 6, 7
HTGR (PEACH BOTTOM SCRAP)	0.0163	U-235	71.79	21	TBD	TBD	TBD	TBD	TBD	TBD	TBD	TBD	TBD	TBD	TBD	Ref. 1, 7
FAST REACTOR FUEL	0.0111	Pu-239?	38.41	11	TBD	TBD	TBD	TBD	TBD	TBD	TBD	TBD	TBD	TBD	TBD	Ref 1, 7
PEACH BOTTOM UNIT I CORE I (PTE-1)	0.0023	U-235	93.12	1	Type 1a-1	10	10.0092	55.81	1.711E-05	55.81	1156.9	126.12	none	- - -	- - -	Ref. 1, 3, 7
(fuel type moved for inclusion in MOX category because of basket and poisoning considerations)																
[redacted]																
		References:														
		1 SNF database, Version 5.0.1														
		2 Fort Saint Vrain HTGR (Th/U carbide) Fuel Characteristics for Disposal Criticality Analysis, DOE/SNF/REP-060, Rev. 0, January 2001														
		3 Data Package for Peach Bottom High-Temperature Gas-Cooled Reactor Cores 1 and 2, INEEL/EXT-2000-00389, May 2000														
		4 Evaluation of Codisposal Viability for MOX (FFTF) DOE-Owned Fuel, BBA00000-01717-5705-00023 Rev00, September 1999														
		5 Summary of Preliminary Criticality Analysis for Peach Bottom Fuel in the DOE Standardized Spent Nuclear Fuel Canister, DOE/SNF/REP-041, Rev. 0, January 1999														
		6 Preliminary Criticality Analysis for Peach Bottom Fuel in the DOE Standardized Spent Nuclear Fuel Canister, INEEL/INT-99-00552, September 1999														
		7 Preliminary Design Specification for Department of Energy Standardized Spent Nuclear Fuel Canisters: Volume 1 - Design Specification, DOE/SNF/REP-111, Rev 3, August 1999														

Table A-11. LEU oxide fuel category.

Fuel Category: LEU oxide	MTHM	Fissile type	BOL enrich (nom)	FHU count	Basket design	FHUs per canister (max)	fissile/canister	Linear loading	% of baseline fuel	Fissile/atom-density		H/X atom ratio		Gd	Gd/X atom ratio		
Fuel Name [Fuel ID #]	metric tonnes		%	[unit]	(type)	(#)	(kg)	(g/cm)	(%)	(atom/b-cm) [per canister]	% of baseline fuel	moderator/ fissile atoms (per canister)	% of baseline fuel	kg (poison) per canister	poison/fissile atoms (per canister)	% of baseline fuel	Notes
Baseline Fuel																	
TMI-2	---	U-235	2.96	---	Type 6a	1	13.72	33.138	100	5.6312E-05	100	270.6	100	none	---	---	Ref. 1, 2, 3, 4
Other Fuels																	
ARKANSAS [7]	0.012	U-235		3	TBD	TBD	TBD	TBD	TBD	TBD	TBD	TBD	TBD	---	---	---	Ref. 1
BCD B-17 (TURKEY POINT 3) [19]	0.412	U-235		1	PWR	NA	NA	NA	NA	NA	NA	NA	NA	---	---	---	Ref. 1
BRP-B [23]	0.250	U-235	2.98	2	BWR	NA	NA	NA	NA	NA	NA	NA	NA	---	---	---	Ref. 1
BRP-C [24]	0.460	U-235	3.63	4	BWR	NA	NA	NA	NA	NA	NA	NA	NA	---	---	---	Ref. 1
BRP-D1 [25]	0.508	U-235	2.87	4	BWR	NA	NA	NA	NA	NA	NA	NA	NA	---	---	---	Ref. 1
BRP-D2 [26]	0.217	U-235	2.81	2	BWR	NA	NA	NA	NA	NA	NA	NA	NA	---	---	---	Ref. 1
BRP-E [27]	2.421	U-235	3.00	18	BWR	NA	NA	NA	NA	NA	NA	NA	NA	---	---	---	Ref. 1
BRP-EG [28]	4.419	U-235	3.51	33	BWR	NA	NA	NA	NA	NA	NA	NA	NA	---	---	---	Ref. 1
BRP-F [30]	1.757	U-235	3.52	13	BWR	NA	NA	NA	NA	NA	NA	NA	NA	---	---	---	Ref. 1
CONNECTICUT YANKEE (S004) [34]	0.394	U-235		1	PWR	NA	NA	NA	NA	NA	NA	NA	NA	---	---	---	Ref. 1
CVTR FUEL [37]	0.067	U-235	1.80	34	Type 6 (modified)	TBD	TBD	TBD	TBD	TBD	TBD	TBD	TBD	---	---	---	Ref. 1
DRESDEN I (UN0064) [47]	0.057	U-235		1	BWR	NA	NA	NA	NA	NA	NA	NA	NA	---	---	---	Ref. 1
EBWR [60]	1.358	U-235	0.71	51	BWR	NA	NA	NA	NA	NA	NA	NA	NA	---	---	---	Ref. 1
HWCTR SPR0 [115]	0.006	U-235		3	Type 1a-4	40	0.7069	2.756	3.26	4.6829E-06	3.26	5715.7	2434.47	7.21	15.25	3069.9	Ref. 1
HWCTR SOT [120]	0.250	U-235		96	Type 1a-4	40	0.8362	3.260	3.86	5.5398E-06	3.86	4636.0	2059.79	7.21	12.89	2595.0	Ref. 1
LOOSE FUEL ROD STORAGE BASKET (LFRSB) [126]	0.311	U-235		1	PWR	NA	NA	NA	NA	NA	NA	NA	NA	---	---	---	Ref. 1
LOFT CENTER FUEL MODULE (A1,A2,A3,F1) [127]	0.813	U-235	4.05	4	PWR	NA	NA	NA	NA	NA	NA	NA	NA	---	---	---	Ref. 1
LOFT CORNER FUEL MODULE [128]	0.279	U-235		4	PWR	NA	NA	NA	NA	NA	NA	NA	NA	--	---	---	Ref. 1
LOFT SQUARE FUEL MODULE [129]	0.813	U-235		4	PWR	NA	NA	NA	NA	NA	NA	NA	NA	---	---	---	Ref. 1
LWR COMMERCIAL FUEL [130]	0.064	U-235		6	TBD	TBD	TBD	TBD	TBD	TBD	TBD	TBD	TBD	TBD	TBD	TBD	Ref. 1
OCONEE [156]	0.032	U-235		14	TBD	TBD	TBD	TBD	TBD	TBD	TBD	TBD	TBD	TBD	TBD	TBD	Ref. 1
PULSTAR-N.C. STATE UNIV. [175]	0.316	U-235		25	BWR	NA	NA	NA	NA	NA	NA	NA	NA	---	---	---	Ref. 1
PULSTAR-SUNY-BUFFALO [176]	0.500	U-235		996	Type 6 (modified)	TBD	TBD	TBD	TBD	TBD	TBD	TBD	TBD	---	---	---	Ref. 1
ROBERT E. GINNA [182]	15.127	U-235	3.48	40	PWR	NA	NA	NA	NA	NA	NA	NA	NA	---	---	---	Ref. 1
SHIPPINGPORT PWR C1 BLKT (RODS) [189]	0.016	U-235	0.71	2	Type 6 (modified)	TBD	TBD	TBD	TBD	TBD	TBD	TBD	TBD	---	---	---	Ref. 1
SHIPPINGPORT PWR C1 BLKT [191]	0.570	U-235	0.99	36	PWR	NA	NA	NA	NA	NA	NA	NA	NA	---	---	---	Ref. 1
SHIPPINGPORT PWR C2 BLKT [192]	1.039	U-235	0.71	17	PWR	NA	NA	NA	NA	NA	NA	NA	NA	---	---	---	Ref. 1
SHIPPINGPORT PWR C2 BLKT [193]	15.780	U-235		72	PWR	NA	NA	NA	NA	NA	NA	NA	NA	---	---	---	Ref. 1
TMI-2 [228]	0.000	U-235	3.59	1	TBD	TBD	TBD	TBD	TBD	TBD	TBD	TBD	TBD	TBD	TBD	TBD	Ref. 1, 2, 3, 4
TMI-2 CORE DEBRIS (D-153 & 388) [229]	0.019	U-235		2	Type 6a	1	0.276	0.667	2.01	1.13291E-06	2.01	17509.8	6470.2	---	---	---	Ref. 1, 2, 3, 4
TURKEY POINT [271]	2.222	U-235		5	PWR	NA	NA	NA	NA	NA	NA	NA	NA	---	---	---	Ref. 1
HWCTR OT [293]	0.140	U-235		8	Type 1a-1	10	1.8041	4.357	5.15	7.4045E-06	5.10	4167.8	1292.7	7.21	5.97	1202.8	Ref. 1
VEPCO [286]	8.832	U-235		20	PWR	NA	NA	NA	NA	NA	NA	NA	NA	---	---	---	Ref. 1
CALVERT CLIFFS 1 [307]	0.676	U-235	3.00	2	PWR	NA	NA	NA	NA	NA	NA	NA	NA	---	---	---	Ref. 1
COOPER NUCLEAR [308]	0.368	U-235	1.60	2	BWR	NA	NA	NA	NA	NA	NA	NA	NA	---	---	---	Ref. 1
LWR SCRAP [309]	0.075	U-235	2.77	1	TBD	TBD	TBD	TBD	TBD	TBD	TBD	TBD	TBD	---	---	---	Ref. 1
POINT BEACH [311]	1.162	U-235	2.50	3	BWR	NA	NA	NA	NA	NA	NA	NA	NA	---	---	---	Ref. 1
FFTF-TFA-ABA-1 THRU 6 [318]	0.257	U-235		6	Type 3	NA	NA	NA	NA	NA	NA	NA	NA	---	---	---	Ref. 1
FFTF-TFA-WBO18 & WBO42 [336]	0.095	U-235		2	Type 3	NA	NA	NA	NA	NA	NA	NA	NA	---	---	---	Ref. 1
H. B. ROBINSON (ASSEMBLY) [383]	0.229	U-235		1	PWR	NA	NA	NA	NA	NA	NA	NA	NA	---	---	---	Ref. 1
PEACH BOTTOM (ASSEMBLY) [385]	0.286	U-235		2	BWR	NA	NA	NA	NA	NA	NA	NA	NA	---	---	---	Ref. 1
PEACH BOTTOM RODS [386]	0.071	U-235		20	Type 6 (modified)	TBD	TBD	TBD	TBD	TBD	TBD	TBD	TBD	---	---	---	Ref. 1
VEPCO [700]	5.314	U-235		12	PWR	NA	NA	NA	NA	NA	NA	NA	NA	---	---	---	Ref. 1
DRCT [701]	6.145	U-235	2.63	2856	Type 6	TBD	TBD	TBD	TBD	TBD	TBD	TBD	TBD	---	---	---	Ref. 1
DRCT [756]	15.006	U-235		6936	Type 6	TBD	TBD	TBD	TBD	TBD	TBD	TBD	TBD	---	---	---	Ref. 1

Table A-11. (continued).

Fuel Category: LEU oxide	MTHM	Fissile type	BOL enrich (pct)	FHU count	Basket design	FHUs per canister (max)	fissile/canister	Linear loading	% of baseline fuel	Fissile atom density		HX atom ratio		Gd	Gd/X atom ratio		
Fuel Name [Fuel ID #]	metric tonnes		%	[unit]	(type)	(#)	(kg)	(g/cm)	(%)	(atom/b-cm) [per canister]	% of baseline fuel	moderator/ fissile atoms (per canister)	% of baseline fuel	kg (poison) per canister	poison/fissile atoms (per canister)	% of baseline fuel	Notes
HWCTR SPR0 [772]	0.181	U-235		48	Type 1a-4	40	2.017	7.863	9.29	1.39622E-05	9.53	2000.8	739.3	7.21	5.34	1075.9	Ref. 1
N.S. SAVANNAH [854]	0.021	U-235		12	TBD	TBD	TBD	TBD	TBD	TBD	TBD	TBD	TBD	- - -	- - -	- - -	Ref. 1
H. B. ROBINSON RODS [864]	0.021	U-235	2.90	12	TBD	TBD	TBD	TBD	TBD	TBD	TBD	TBD	TBD	- - -	- - -	- - -	Ref. 1
TMI-2 CORE DEBRIS [914]	81.749	U-235	2.54	341	Type 6a	1	5.726	13.830	41.73	2.35015E-05	41.73	844.1	311.9	- - -	- - -	- - -	Ref. 1, 2, 3, 4
DRESDEN I (E00161) [929]	0.110	U-235		1	BWR	NA	NA	NA	NA	NA	NA	NA	NA	- - -	- - -	- - -	Ref. 1
LWR SNF SCRAP [940]	0.154	U-235	3.92	9	TBD	TBD	TBD	TBD	TBD	TBD	TBD	TBD	TBD	TBD	TBD	TBD	Ref. 1
HWCTR IRO [976]	0.006	U-235		2	Type 1a-4	40	0.5768	2.638	3.12	4.43351E-06	3.20	5962.9	2203.4	7.21	15.92	3206.4	Ref. 1
HWCTR SPR0 [978]	0.089	U-235		5	Type 1a-4	40	4.8322	18.839	22.27	3.22131E-05	22.83	836.1	309.0	7.21	2.23	449.1	Ref. 1
CANDU [979]	0.049	U-235		4	TBD	TBD	TBD	TBD	TBD	TBD	TBD	TBD	TBD	TBD	TBD	TBD	Ref. 1
VEPCO (T-11 ASSEMBLY) [993]	0.440	U-235		1	PWR	NA	NA	NA	NA	NA	NA	NA	NA	- - -	- - -	- - -	Ref. 1
VEPCO (T-11) [994]	0.007	U-235		3	Type 6 (modified)	TBD	TBD	TBD	TBD	TBD	TBD	TBD	TBD	- - -	- - -	- - -	Ref. 1
VEPCO (T-11 RODS) [1049]	0.020	U-235		9	Type 6 (modified)	TBD	TBD	TBD	TBD	TBD	TBD	TBD	TBD	- - -	- - -	- - -	Ref. 1
LOFT CENTER FUEL MODULE (FP-1) [1061]	0.203	U-235	4.05	1	PWR	NA	NA	NA	NA	NA	NA	NA	NA	- - -	- - -	- - -	Ref. 1
BRP-EG/F [1081]	0.541	U-235	3.50	4	BWR	NA	NA	NA	NA	NA	NA	NA	NA	- - -	- - -	- - -	Ref. 1
BRP-F-PU [1082]	0.264	U-235	3.53	2	BWR	NA	NA	NA	NA	NA	NA	NA	NA	- - -	- - -	- - -	Ref. 1
COMMERCIAL BWR & PWR SNF [1089]	0.038	U-235		19	TBD	TBD	TBD	TBD	TBD	TBD	TBD	TBD	TBD	TBD	TBD	TBD	Ref. 1

References:

1. SNF database, Version 5.0.1
2. TMI Fuel Characteristics for Disposal Criticality Analysis, DOE/SNF/REP-084 Rev. 0, September 2003
3. Intact and Degraded Mode Criticality Calculations for the Codisposal of TMI-2 Spent Nuclear Fuel in a Waste Package, CAL-DSD-NU-000004 (draft)
4. Preliminary Design Specification for Department of Energy Standardized Spent Nuclear Fuel Canisters, Volume 1 - Design Specification, DOE/SNF/REP-011, Rev. 3, August 1999