OFFICE OF CIVILIAN RADIOACTIVE WASTE MANAGEMENT

CALCULATION COVER SHEET

1. QA: QA
Page: 1 Of: 70

2. Calculation Title
INTACT
~~Intact~~ and Degraded Criticality Calculations for the Codisposal of Shippingport LWBR Spent Nuclear Fuel in a Waste Package

3. Document Identifier (including Revision Number)
CAL-EDC-NU-000004 REV 00

MOL.20000922.0093

4. Total Attachments	5. Attachment Numbers – Number of pages in each
4	I-2, II-11, III-3, IV-Compact Disk

	Print Name	Signature	Date
6. Originator	Leland M. Montierth	Leland M. Montierth	9/11/00
7. Checker	Horia R. Radulescu	Horia R. Radulescu	09/15/2000
8. Lead	J. Wesley Davis	J. Wesley Davis	9/15/2000

1. Remarks

Remark added on Pg 15 JWD 9/18/00

Revision History

10. Revision No.	11. Description of Revision
00	Initial Issue

CONTENTS

CONTENTS (Continued)

Page

CONTENTS (Continued)

Page

FIGURES

Page

TABLES

Page

TABLES (Continued)

Page

1. PURPOSE

The objective of this calculation is to characterize the nuclear criticality safety concerns associated with the codisposal of the U.S. Department of Energy's (DOE) Shippingport Light Water Breeder Reactor (SP LWBR) Spent Nuclear Fuel (SNF) in a 5-Defense High-Level Waste (5-DHLW) Waste Package (WP), which is to be placed in a Monitored Geologic Repository (MGR). The scope of this calculation is limited to the determination of the effective neutron multiplication factor (k_{eff}) for intact- and degraded-mode internal configurations of the codisposal WP containing Shippingport LWBR seed-type assemblies. The results of this calculation will be used to evaluate criticality issues and support the analysis that is planed to be performed to demonstrate the viability of the codisposal concept for the MGR.

This calculation is associated with the waste package design and was performed in accordance with the *DOE SNF Analysis Plan for FY 2000* (See Ref. 22). The document has been prepared in accordance with the Administrative Procedure AP-3.12Q, *Calculations* (Ref. 23).

The information provided by the sketch attached to this calculation is that of the potential design of the DOE SNF canister containing SP LWBR SNF considered in this calculation.

2. METHOD

The calculation method employs the use of MCNP Version 4B2 computer code (Ref. 1) to calculate the effective neutron multiplication factor for various geometrical configurations of SP LWBR SNF.

With regard to the development of this calculation, the control of the electronic management of data was evaluated in accordance with AP-SV.1Q, *Control of the Electronic Management of Information* (Ref. 19). The evaluation (Ref. 20) determined that current work process and procedures are adequate for the control of the electronic management of data for this activity.

3. ASSUMPTIONS

3.1 Beginning-of-Life (BOL) pre-irradiation fuel composition is used for all calculations. The rationale for this assumption is that it is conservative to assume unirradiated fuel since the seed assemblies contain a greater mass of fissile material and thus are more neutronically reactive than spent fuel (Ref. 4, p. B-12). This assumption is used throughout Section 5.

3.2 The dished faces of the fuel pellets are neglected for treating intact fuel pellets and the fuel number density is determined by using the fuel mass and the footprint volume of the fuel. The void space in the fuel and other voids in the fuel pin are assumed to contain water since this gives more conservative results as shown in Section 6.1.2. This assumption is used throughout Section 5.

3.3 The fuel assembly base plates, the fuel rod plenum springs, the plenum and other structural materials are neglected. The rationale for this assumption is that it is conservative to neglect structural materials because they provide some additional amount of neutron absorption. This assumption is used throughout Section 5.

3.4 The curved bottom and top carbon steel impact plates of the DOE SNF canister are represented as 2 in. carbon steel slabs. The ends of the DOE SNF canister are simplified and represented as "squared off." The rationale for this assumption is that it is conservative to neglect this portion of the DOE SNF canister since it provides a small amount of neutron absorption. This assumption is used throughout Section 5.

3.5 At least 30 cm of full-density water (1.0 g/cm^3) surrounding the WP is used for cases with a water neutron reflector. This is based on a 30 cm thick water reflection being effectively equivalent to an infinite neutron reflector (Ref. 2, p. 107). This water thickness is used throughout Section 5.

3.6 For cases where degradation products accumulate at the bottom of the DOE SNF canister or the WP, any remaining void spaces are typically assumed to be filled with water. The rationale for this assumption is that water is more reactive than void since the water acts as a reflector. This assumption is used throughout Section 5.2.

3.7 The uranium and thorium content in the materials that are formed from the degradation of the HLW glass is neglected in the calculations. These materials are the prebreach clayey and the post-breach clayey before and after, respectively, the breach of the DOE SNF canister. The rationale for the assumption is that the uranium is composed mainly of (non-fissile) U-238 and would provide some small amount of parasitic neutron absorption. The thorium is also a parasitic neutron absorber. This assumption is used throughout Section 5.

3.8 For degradation analysis, stainless steel degrades to goethite, FeOOH, and all other constituents of the steel are neglected in the calculations. The goethite is assumed to form with void occupying 40% or more of its volume. The rationale for this assumption is that it is conservative to neglect the non-iron components of the stainless steel since they provide some small amount of parasitic neutron absorption. This assumption is used throughout Section 5.2.

3.9 The DOE SNF canister is assumed to be filled with water-saturated aluminum fill material everywhere except in the flow channels between fuel rods inside the assembly duct. Since the fill material contains gadolinium (a neutron absorber) this assumption is conservative. This assumption is used throughout Section 5.

3.10 The gadolinium content of the fill material is expressed as a weight percentage of the Al-$GdPO_4$ mix. The density of the material is determined by assuming that the volume of

the aluminum and gadolinium, present as $GdPO_4$, is conserved when mixed. This assumption is used throughout Section 5 and is based on engineering judgement.

3.11 For completely degraded analysis, the fuel and ThO_2 remain chemically unchanged. In some cases the ThO_2 content of the degraded fuel is neglected. This assumption is used in Section 5.2 and the rationale for this assumption is that it is conservative since the Th is a parasitic neutron absorber.

3.12 For degraded mode analysis, materials that mix together do so homogeneously. This assumption is used in Section 5.2 and is based on engineering judgement.

3.13 For loose pin configurations, i.e., cases where the fuel pin clips/spacers and assembly duct have degraded and the pins are no longer contained, the placement and stacking of the pins is chosen to give a more reactive configuration rather than a more realistic stacking due to gravity. The rationale for this assumption is that it is more conservative since it gives a larger k_{eff} for the system as shown in Section 6.2.5. This assumption is used in Sections 5.2.2.4 and 5.2.2.5.

3.14 For many cases where degraded sludge material surrounds intact fuel components and some of the components are only partially submerged in the sludge, less than the exact amount of sludge (which may also contain gadolinium) is used. The remaining volume is filled with water and/or other degradation products. This assumption is based on engineering judgement (and it is conservative to neglect neutron absorbers). This assumption is used in Section 5.2.

3.15 When considering the effects of radioactive decay due to the passage of time, decay of any of the HLW glass isotopes (and resulting clayey material) is neglected. This assumption is based on engineering judgement and does not effect the results. Also, the decay daughters of the uranium in the fuel are neglected. The rationale for this assumption is that it is conservative since these are parasitic neutron absorbers. These assumptions are used in Section 5.2.3.

3.16 Aluminum cross section is used instead of zinc cross section in the MCNP input since the cross section of zinc is not available in either the ENDF/B-V or ENDF-VI cross-section libraries. The rationale for this assumption is that it is conservative since the thermal-neutron capture cross section and the resonance integral of zinc (1.1 and 2.8 barn, respectively, Ref. 12) are greater than those of aluminum (0.23 and 0.17 barn, respectively, Ref. 12). This assumption is used throughout Section 5.

3.17 Ba-138 cross section is used instead of Ba-137 cross section in the MCNP input since the cross section of Ba-137 is not available in either ENDF/B-V or ENDF-VI cross-section libraries. The rationale for this assumption is that it is conservative since the thermal-neutron capture cross section and the resonance integral of Ba-137 (5.1 and 4 barn,

respectively, Ref. 12) are greater than those of Ba-138 (0.43 and 0.3 barn, respectively, Ref. 12). This assumption is used throughout Section 5.

3.18 The degradation products from the zirconium in the assembly ducts and fuel pin cladding are neglected. The rationale for this assumption is that it is conservative to neglect these products since they would displace water that gives more neutron moderation. This assumption is used throughout Section 5.2.2.

3.19 A void fraction of 0.4667 is used for the Al fill material. A value of 0.48 (e.g., 0.52 as fractional solids content) is given in Ref. 16 (Table 2.1 p. 16) for cubic packing of equally sized spheres. Additional sources indicate a void fraction of 47.65 % for the same type of packing (Ref. 17, p. 11) and 38-40 % for steel shot (Ref. 18, p. 8). Since the Al fill material is composed of particles of different sizes, it is easily shown from Ref. 16 that a void fraction of 0.4667 (or smaller) is obtained if the fill material is composed of a binary mixture of spheres surrounded by irregularly shaped but smaller particles as long as the spheres constitute 2/3 (or less) of the total mass of the fill material. Therefore, the void fraction used is based on similar values indicated in the literature. Also, for a given mass of Gd in the fill material, small variations in the mass of Al would have a negligible effect on the final value of k_{eff}. Consequently, different void fractions for Al fill materials produced by different manufacturers will have a negligible effect on the value of k_{eff}. This assumption is used in Section 5.

3.20 Stainless steel Type 316L (UNS S31603) is substituted for Type 316NG for the inner barrier of the waste package. The rationale for this is that the weight percent (wt.%) values used for Type 316L (Table 5-6) fall within the composition ranges for Type 316NG (Ref. 36, p. 931). The exception is the carbon content that is slightly higher for Type 316L, but this makes the composition used more conservative. This assumption is used in Section 5.

3.21 Carbon steel Type A 516 Grade 70 (UNS K02700) is substituted for ASME Type SA-36 for the bottom and top carbon steel impact plates of the DOE SNF canister. The rationale for this is that the wt.% values used for Type A 516 (see Table 5-7) fall within the composition ranges for Type SA-36 (Ref. 35, Table 2). The exception is the carbon content that is slightly higher for Type A 516, but this makes the composition used more conservative. This assumption is used in Section 5.

4. USE OF COMPUTER SOFTWARE AND MODELS

4.1 SOFTWARE

4.1.1 MCNP4B2

MCNP4B2 computer code is used to calculate the effective neutron multiplication factor for nuclear criticality evaluations (Ref. 3).

- Program Name: MCNP
- Version/Revision Number: Version 4B2
- Computer Software Configuration Item (CSCI) Number: 30033 V4B2LV
- Computer Type: Hewlett Packard 9000 Workstations
- Government Identification Numbers: 323786, 323787, 311670, 311672, 345685, 336829 (see Ref. 33)
- Computer Physical Location: Idaho National Engineering and Environmental Laboratory, Idaho Falls, Idaho

Each input file used is echoed in its output file. The output files (containing their corresponding echoed input) are listed in Attachment II; they are stored on electronic media (compact disk) (Attachment IV).

The MCNP4B2 computer code (Ref. 1)

- is an appropriate tool to perform the criticality calculations reported in this document.
- has been validated over the range it was used.
- was previously obtained from the Civilian Radioactive Waste Management System (CRWMS) Management and Operating Contractor (M&O) Software Configuration Management (SCM) in accordance with appropriate procedures.

4.2 SOFTWARE ROUTINES

4.2.1 Excel

The commercially acquired Excel 97 spreadsheet program was used to generate some of the input data for the MCNP computer code. In all applications involving the Excel program, standard program options were used. The software specifications are as follows:

- Software name: Microsoft Excel
- Software version/revision number: 97 SR-2
- Computer type: Personal Computer (PC)

The Excel file is included as part of the electronic data on a compact disk (CD) (Attachment IV). The name of the electronic copies of the Excel file is provided in Attachment III. The information provided on the CD (Attachment IV) meets the requirements of Sections 5.1 and 5.1.1.2 of AP-SI.1Q, *Software Management* (Ref. 25).

4.3 MODELS

None used.

5. CALCULATION

This section describes the calculations performed to calculate k_{eff} of the codisposal WP with the DOE SNF canister containing an intact or degraded Shippingport LWBR fuel assembly. The intact codisposal WP, the fuel assembly and the DOE SNF canister are described in Section 5.1. Chemical compositions of the materials used in the calculations are summarized in Tables 5-4 through 5-12 in Section 5.1.5. Description of the MCNP calculations is given in Section 5.2. Calculations for the intact fuel assembly are described in Section 5.2.1. Calculations for the partially and the fully degraded fuel assembly are described in Section 5.2.2. The effects of changes in the composition of the fuel due to radioactive decay after a large passage of time are described in Section 5.2.3. A homogeneous model of the intact seed assembly is described in Section 5.2.4. This model may be useful in determining if similar fuels (Th/U oxide) can be bound by these results. MCNP output files are stored on electronic media in Attachment IV. Results of the calculations are presented in Section 6.

This calculation is based in part on unqualified data. The unqualified data related to spent nuclear fuel is only used to determine the bounding values and identify items that are important to criticality control for this fuel group by establishing the limits based on the representative fuel type (Shippingport LWBR) for this group (Th/U oxide fuel). Hence, the input values used for evaluation of codisposal viability of the Th/U oxide (Shippingport LWBR) SNF do not constitute data that have to be qualified in this application. They only establish the bounds for acceptance. Since the input values are not relied upon directly to address safety and waste isolation issues and since the design inputs do not affect a system characteristic that is critical for satisfactory performance, according to the governing procedure (AP-3.15Q, *Managing Technical Product Inputs*, Ref. 21), the data do not need to be controlled as TBV (to be verified). The SRS HLW glass composition has not been finalized and is, therefore, controlled with TBV. Although the geochemical results have been shown to be relatively insensitive to the range of probable compositions (Ref. 9), the glass compositions and calculated degraded compositions must be demonstrated bounding in the future.

5.1 CALCULATION INPUTS

The description of the Shippingport LWBR fuel is taken from the Shippingport LWBR fuel characteristics document, Ref. 4. All fuel and DOE SNF canister related information is from this reference unless otherwise noted. Compositions for structural and other nonfuel related materials are from standard handbooks, and due to the nature of these sources, these data are established facts and are therefore considered as accepted data.

The LWBR was designed as a pressurized, light-water moderated and cooled thermal reactor that utilized the Th/U (U-233) oxide fuel cycle. The central portion of the core consisted of 12 movable-fuel seed assemblies each surrounded by a stationary blanket assembly (see Figure 3-2 from Ref. 4). Reactor control was achieved by raising and lowering the central seed assemblies, thus eliminating the need for control rods. The UO_2-rich seed assemblies generated neutrons that

were absorbed in the fertile fuel of the blanket/reflector assemblies producing additional fissile material and fissions. The fuel and blanket assembly design was optimized to maximize neutron production and minimize neutron loss. The power-flattening regions around the outer periphery of the core actually contained more U-233 mass than the standard blanket regions that were located in the inner portion of the core. Use of this more highly loaded power-flattening blanket region produced a relatively uniform radial power distribution across the core. Since the seed assembly is the only assembly that will fit in an 18-in.-diameter DOE SNF canister without disassembly, criticality analysis presented here treats only seed assemblies.

Note that the extra digits shown in metric units in this report are a result of converting from English units and do not represent enhanced accuracy. The number of digits in the values cited herein may included rounding or may reflect the input from another source; consequently, the number of digits should not be interpreted as an indication of accuracy.

5.1.1 Description of Shippingport LWBR Seed Assembly

The LWBR core was fueled with fertile Th-232 and fissile U-233, the relative concentrations of which varied axially and radially across the core. The uranium that was used in fabricating the fuel was very highly enriched in U-233 with some isotopic impurities as shown in Table 5-1. The assembly is composed of cylindrical fuel rods on a triangular pitch that were cooled by circulating water in the reactor. The space between fuel rods forms coolant passages. The fuel rods were loaded with ceramic fuel pellets some composed of thoria (ThO_2) and the rest composed of a mixture of thoria and UO_2. Rods were sealed and backfilled with helium at one atmosphere during welding.

Table 5-1. Isotopic Composition of the Uranium Used in Fabricating the Fuel

Isotope	Wt.%
U-232	<0.001
U-233	98.23
U-234	1.29
U-235	0.09
U-236	0.02
U-238	0.37

Two different enrichments (defined as the ratio of the mass of fissile to the total heavy metal mass) of the same binary UO_2-ThO_2 matrix were used in seed rods. At BOL the 12 seed assemblies contained 198.59 kg of fissile material. Those rods with the lower fissile concentration (low zone) contained 61.28 kg (enrichment of 4.337%) of fissile material, while the rods with the higher fissile concentration (high zone) contained 137.31 kg (enrichment of 5.202%) of fissile material. The radial zoning of the seed rods is shown in Figure 5-1. The axial zoning and some axial dimensions of the seed rods are shown in Figure 5-2, depicting the varying enrichments of the 619 rods in the seed assembly.

Rod Type[a]	Binary Stack Length
05, 06	84"
04	70"
03	56"
01, 02, 07, 08	42"

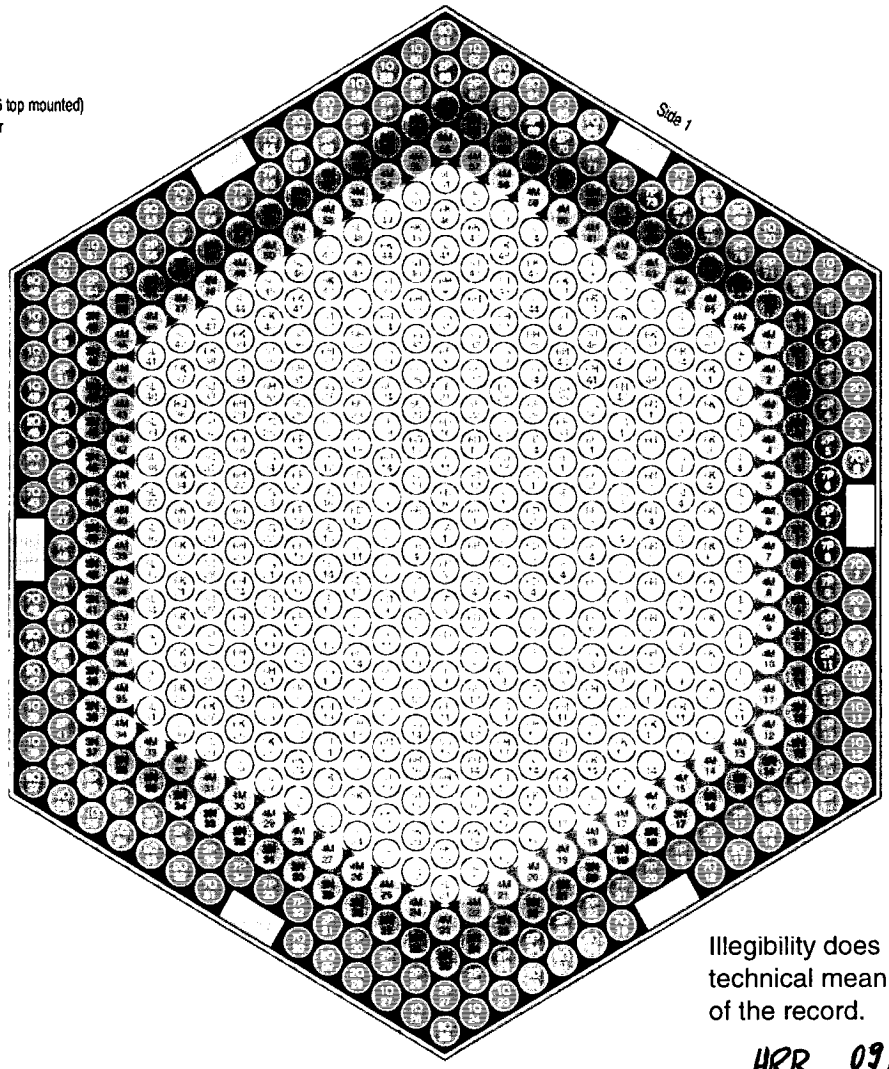

Illegibility does not impact the technical meaning or content of the record.

HRR 09/18/2000

NOTE: [a] Rod type: First two digits of a rod serial number correspond to the rod type number

Figure 5-1. R-Z Schematic of a Seed Assembly

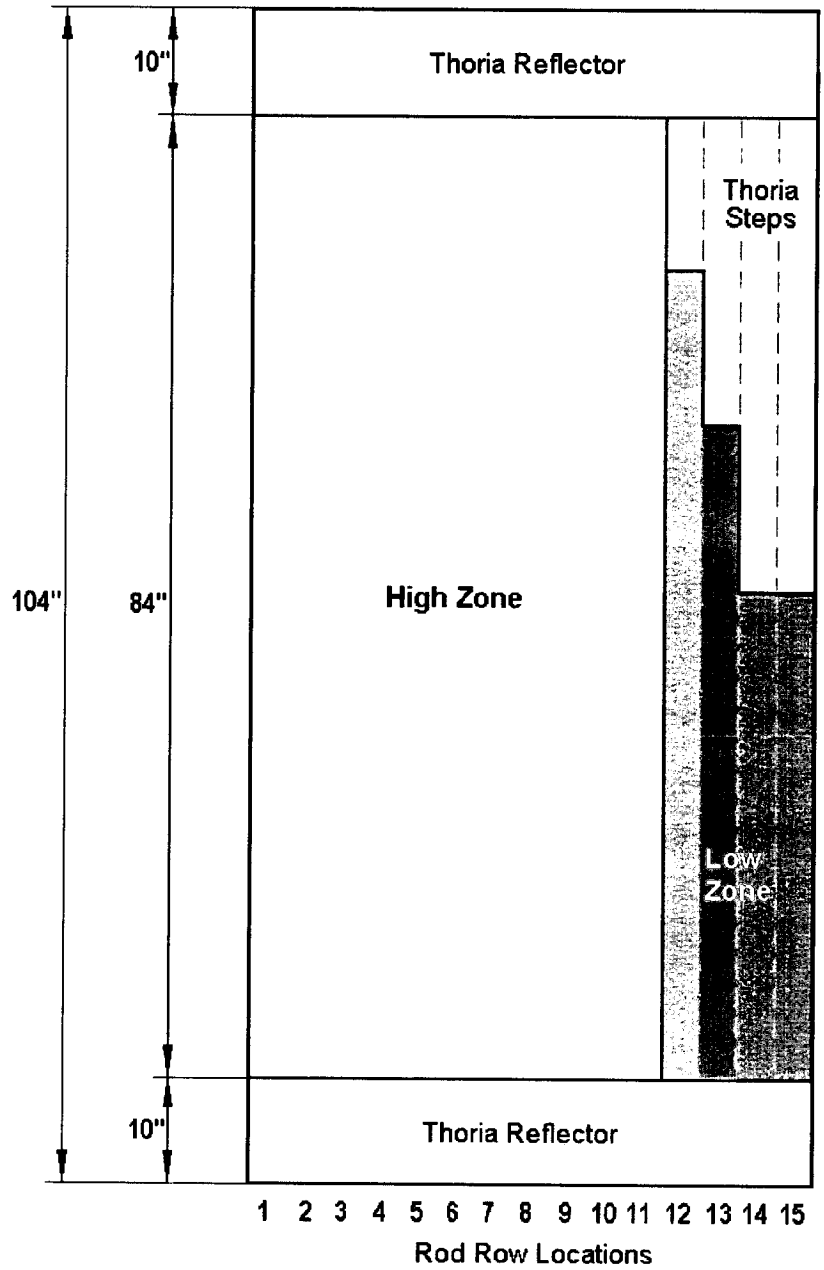

Figure 5-2. Layout of Fuel Rods in a Seed Assembly

Dimensions and densities for the two types of fuel pellets are given in Table 5-2. The fuel pellets are right circular cylinders with chamfers (bevels) on both ends to ease loading into the tubing, to facilitate movement of the pellet stack in the tubing during power operation and to reduce pellet chipping during fabrication, rod handling and power operation. The pellets have dished ends to reduce axial expansion of the stack during reactor operation. The low zone type pellets and the thoria pellets, used at the top and bottom of the fuel stack, are shorter than the high zone types.

A spring-bearing thoria pellet with only one dished end was used at the top of each fuel (pin) stack. During fabrication, the pellets were sintered to a large fraction of their theoretical densities to ensure dimensional stability. The void fraction listed in Table 5-2 is defined as the difference between the volume of a right circular cylinder with nominal pellet dimensions and the actual pellet volume expressed as a fraction of the volume of the right circular cylinder. The difference in volume being due to the end dishes, chamfers, and pellets chips. The bulk density, defined to be the mass divided by the footprint volume of the mass, is also listed in the table.

Table 5-2. Characteristics of Pellets in the Seed Region

Property (units)	Seed Region Enrichment Zone		
	High (5.202 wt% U-fissile enriched)[a]	Low (4.337 wt % U-fissile enriched)[a]	ThO_2
Diameter[b], mm (in)	6.4008 (0.2520)	6.4008 (0.2520)	6.49224 (0.2556)
Diameter[c], mm (in)	6.4008 ± .0127 (0.252 ± 0.0005)	6.4008 ± .0127 (0.252 ± 0.0005)	6.4897 ± .0127 (0.2555 ± .0005)
Length[b], mm (in)	15.621 (0.615)	11.2776 (0.444)	13.462 (0.530)
Length[c], mm (in)	15.621 ± .508 (0.615 ± .020)	11.303 ± .508 (0.445 ± .020)	13.462 ± .508 (0.530 ± .020)
Taper or Chamfer Depth[c], mm (in)	0.381 ± 0.127 (0.015 ± 0.005)	0.381 ± 0.127 (0.015 ± 0.005)	0.381 ± 0.127 (0.015 ± 0.005)
Taper or Chamfer Length[c], mm (in)	0.381 ± 0.127 (0.015 ± 0.005)	0.381 ± 0.127 (0.015 ± 0.005)	0.381 ± 0.127 (0.015 ± 0.005)
End Dish Spherical Radius[c], mm (in)	9.144 (0.360)	9.144 (0.360)	7.5692 (0.298)
End Shoulder Width[c], mm (in)	1.1684 ± 0.20 (0.046 ± 0.008)	1.1684 ± 0.20 (0.046 ± 0.008)	1.397 ± 0.254 (0.055 ± 0.010)
End Face Dish Depth[c], mm (in)	0.2286 ± 0.0762 (0.009 ± 0.003)	0.2286 ± 0.0762 (0.009 ± 0.003)	0.2286 ± 0.0762 (0.009 ± 0.003)
Void Fraction[b] (of chamfers, dishes, and chip defects)	0.01172	0.01704	0.01253
Percent Theoretical Density[b]	97.554	97.712	98.013
Theoretical Density, g/cm^3	10.042	10.035	9.999
Bulk Density[d], g/cm^3	9.710	9.665	9.678

NOTES: [a] Weight percent fissile (U-233+U-235)·100/(Th+U).
[b] Average as built.
[c] Design specification.
[d] Attachment III, EXCEL Spreadsheet, sheet1.

There are eight different types of seed rods that compose four different fuel regions shown in Figure 5-2. Additional fuel rod information including the BOL fissile mass loading for each rod type is also given in this figure. Examination of Figure 5-1 shows that the fuel rods can be further categorized into four general regions based on axial fuel loading. The seamless cladding tubes are composed of Zircaloy-4 and have different end plugs and mounting stems welded at the ends depending on the fuel rod type. This gives slightly different overall lengths for the different fuel rod types. These lengths and BOL fuel information are given in Table 5-3. The cladding

thickness is 0.563118 mm (0.02217 in.) and its outside diameter is 7.78002 mm (0.3063 in.). Within the tube and at the top of the fuel pellet stack is a 254 ± 2.54 mm (10.0 ± 0.1 in.) plenum stack to accommodate fission gases. The plenum housed an Inconel X-750 wire compression spring.

Table 5-3. Fuel Rod Lengths and BOL Fissile Mass Loading

Fuel Rod Type	BOL fissile mass loading, g/rod)	Fissile Concentration of the Binary Stack[a] (wt% fissile)	Length of Binary Stack [mm (in)]	Overall Fuel Rod Length [mm (in)]
01, 02	14.33	4.337	1066.8 (42)	3023.108 (119.02)
07, 08	14.33	4.337	1066.8 (42)	3006.598 (118.37)
03	19.14	4.337	1422.4 (56)	3026.156 (119.14)
04	23.92	4.337	1778.0 (70)	3026.156 (119.14)
05,06	34.57	5.202	2133.6 (84)	3029.458 (119.27)

NOTE: [a] Weight percent fissile (U-233+U-235)·100/(Th+U).

The fuel pins maintain a nominal center-to-center spacing (pitch) of 9.36244 mm (0.3686 in.) along the length of the assembly supported by nine stainless steel (AM-350) grid plates. The outer support shell of the assembly is a 2.032 mm (0.080 in.) thick hexagonal duct (shroud) made of Zircaloy-4 with a length of 3302 mm (130.0 in.).

5.1.2 Description of DOE SNF Canister

The description of the 15-ft DOE SNF canister (also referred to as the 18-in.-diameter DOE SNF canister) is taken from Ref. 6. The DOE SNF canister is a right circular cylinder pipe made of stainless steel (Type 316L or UNS S31603) with an outside diameter of 457.2 mm (18 in.) and a wall thickness of 9.525 mm (0.375 in.). The nominal internal length of the DOE SNF canister reserved for fuel loading is 411.7086 cm (162.09 in.). The top and bottom carbon steel (ASME SA-36) impact plates are 50.8 mm (2.0 in.) thick at the centers. Dished heads seal the ends of the DOE SNF canister. The DOE SNF canister pipe extends several inches beyond the dished heads on each end to give a maximum external length of 456.9968 cm (179.92 in.). A detailed sketch of the DOE SNF canister is shown in Attachment I. Each DOE SNF canister will also contain a rectangular basket structure to hold the Shippingport LWBR fuel assembly (see Attachment I). The basket structure is not a standard part of the 18-in. DOE SNF canister, but is designed specific to the SNF to be inserted into the DOE SNF canister. The basket plates are made of 9.5 mm (0.374 in.) thick stainless steel (Type 316L or UNS S31603) and the inner widths of the plates are 295 mm and 257 mm, respectively. Figure 5-3 shows a cross-sectional view of a MCNP case where the DOE SNF canister is loaded with a seed assembly. Finally, a boxed shaped spacer will fit inside the basket to elevate the SNF above the canister bottom.

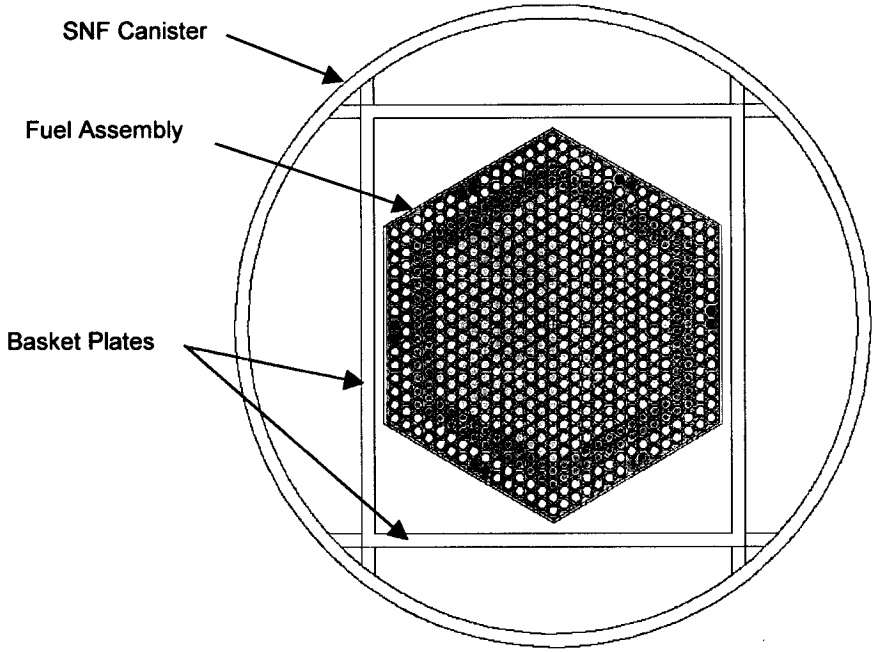

Figure 5-3. Cross-Sectional View of the DOE SNF Canister

5.1.3 Codisposal WP

The codisposal WP contains five HLW glass pour canisters surrounding an 18-in. DOE SNF canister (see Figure 5-4). The WP is composed of materials that are typical of commercial SNF storage containers. The outer barrier shell is composed of a 25 mm (0.9843 in.) thick Alloy 22 (UNS N06022) and serves as a corrosion resistant barrier. The inner barrier is composed of 50 mm (1.9685 in.) thick stainless steel (Type 316NG). The outside diameter of the WP is 2030 mm (79.921 in.) and inside cavity length is 4617 mm (181.772 in.). The inner and outer barrier lids are 105 mm (4.134 in.) and 25 mm (0.9843 in.) thick, respectively. There is a 30 mm (1.1811 in.) closure lid gap composed of stainless steel (Type 316NG) between the upper inner and outer barrier lids. There is a 225 mm (8.8583 in.) long skirt at each end of the codisposal WP.

The DOE SNF canister is placed in a 31.75-mm (1.25-in.) -thick carbon steel (ASTM A 516 Grade 70 or UNS K02700) support tube with a 565 mm (22.244 in.) nominal outer diameter. The support tube is connected to the inside wall of the codisposal WP by web-like carbon steel (ASTM A 516 Grade 70 or UNS K02700) support plates that form five emplacement positions for the HLW glass pour canisters equally spaced in angle about the center support tube. The support tube and plates are 4607 mm (181.3780 in.) long.

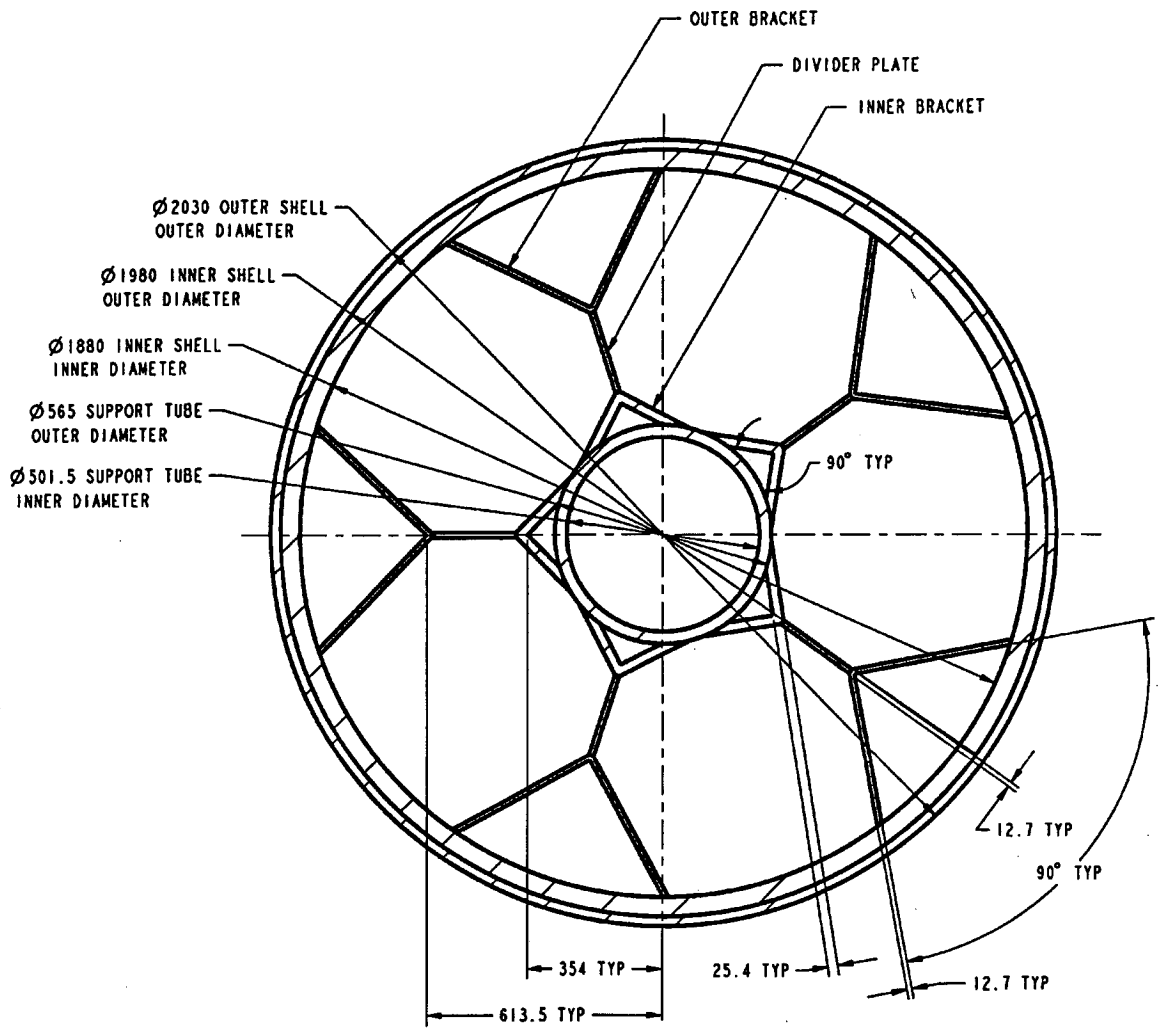

NOTE: TYP = typical

Figure 5-4. Cross Section of 5-HLW/DOE Spent Fuel-Long Codisposal WP

5.1.4 HLW Glass Pour Canisters

The Hanford 15-foot HLW glass pour canister is a cylindrical stainless steel (Type 304L or UNS S30403) shell with an outer diameter of approximately 610 mm (24.00 in.), a wall thickness of 10.5 mm (0.413 in.), and a nominal length of 4572 mm (180 in.), see Ref. 24. The total HLW glass pour canister weight is 4200 kg and HLW glass occupies 87% of the volume (Ref. 24, pp. 1, 2). The nominal dimensions of the HLW glass pour canister are used for the calculations. The codisposal WP loaded with the HLW glass pour canisters and the DOE SNF canister are shown in Figure 5-5. In some calculations, the degraded HLW canisters are represented as clayey material. The composition of this clayey material prior to the breach of the DOE SNF canister is given in Table 5-9.

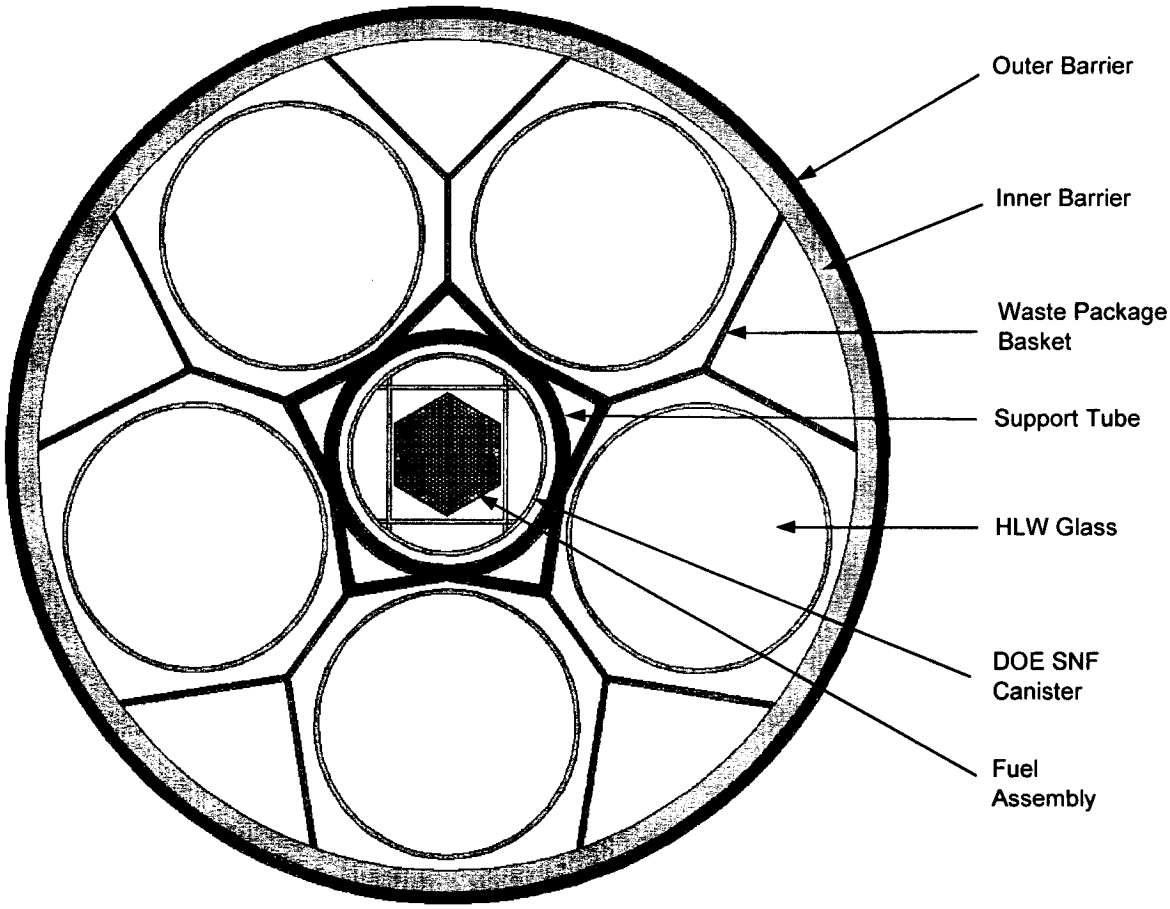

Figure 5-5. Cross-Sectional View of the Codisposal WP

5.1.5 Materials

Chemical composition of Zircaloy-4 used in the fuel assembly representation is given in Table 5-4.

Table 5-4. Chemical Composition of Zircaloy-4[a]

Element	Range (wt%)	Value Used (wt%)
Fe	0.18-0.24	0.20
Cr	0.7-0.13	0.10
Fe+Cr	0.28-0.37	0.00
Sn	1.2-1.7	1.40
O	0.09-0.16	0.12
Zr	Balance	98.18
Density[b] = 6.56 g/cm^3		

NOTE: The Universal Numbering System for Zircaloy-4 is R60804 (Ref. 5, p. 44).
Source: [a] Ref. 26, p. 2.
[b] Ref. 27, p. 666.

Chemical composition of Alloy 22 used for the WP inner barrier representation is given in Table 5-5.

Table 5-5. Chemical Composition of Alloy 22 (UNS N06022)[a]

Element	Range (wt%)	Value Used (wt%)
C	0.015 (max)	0.015
Mn	0.50 (max)	0.500
Si	0.08 (max)	0.080
Cr	20.0-22.5	21.250
Ni	54.765	54.765
Mo	12.5-14.5	13.500
Co	2.50 (max)	2.500
W	2.5-3.5	3.000
P	0.02 (max)	0.020
S	0.02 (max)	0.020
V	0.35 (max)	0.350
Fe	2.0-6.0	4.000
Ni	Balance	Balance
Density = 8.69 g/cm^3		

Source: [a] Ref. 28, p. 2.

The chemical compositions of Type 316L Stainless Steel used for the DOE SNF canister and Type 304L Stainless Steel used for the HLW glass pour canisters are given in Table 5-6.

Table 5-6. Chemical Composition of Type 316L (UNS S31603) and 304L Stainless Steel (UNS S30403)

	316L Stainless Steel (UNS S31603)[a]		304L Stainless Steel (UNS S30403)[c]	
Element	Range (wt%)	Value Used (wt%)	Range (wt%)	Value Used (wt%)
C	0.03 (max)	0.030	0.03 (max)	0.03
Mn	2.00 (max)	2.000	2.00 (max)	2.00
P	0.045 (max)	0.045	0.045 (max)	0.045
S	0.03 (max)	0.030	0.03 (max)	0.03
Si	1.00 (max)	1.000	0.75 (max)	0.75
Cr	16.00-18.00	17.00	18.00-20.00	19.00
Ni	10.00-14.00	12.00	8.00-12.00	10.00
Mo	2.00-3.00	2.500	None	None
N	0.1 (max)	0.100	0.1 (max)	0.1
Fe	Balance	65.295	Balance	68.045
Density[b] (g/cm^3)	7.98		7.94	

Source: [a] Ref. 29, p. 2.
[b] Ref. 30, p. 7.
[c] Ref. 34, p. 2.

Chemical composition of A 516 Carbon Steel used for the WP representation is given in Table 5-7.

Table 5-7. Chemical Composition of A 516 Carbon Steel Grade 70 (UNS K02700)[a]

Element	Range (wt%)	Value Used (wt%)
C	0.30 (max)	0.300
Mn	0.85-1.20	1.025
P	0.035 (max)	0.035
S	0.035 (max)	0.035
Si	0.15-0.40	0.275
Fe	Balance	98.33
Density[b] = 7.85 g/cm^3		

Source: [a] Ref. 31, p. 2.
[b] Ref. 32, p. 9.

The Savannah River Site (SRS) HLW glass composition from Ref. 7 is given in Table 5-8. The glass density is from Ref. 8. These data are unqualified.

Table 5-8. Chemical Composition of HLW Glass

Element/Isotope	Wt%	Element/Isotope	Wt%
Li-6	9.5955E-02	Li-7	1.3804E+00
B-10	5.9176E-01	B-11	2.6189E+00
O	4.4770E+01	F	3.1852E-02
Na	8.6284E+00	Mg	8.2475E-01
Al	2.3318E+00	Si	2.1888E+01
S	1.2945E-01	K	2.9887E+00
Ca	6.6188E-01	Ti	5.9676E-01
Mn	1.5577E+00	Fe	7.3907E+00
Ni	7.3490E-01	P	1.4059E-02
Cr	8.2567E-02	Cu	1.5264E-01
Ag	5.0282E-02	Ba-137[a]	1.1267E-01
Pb	6.0961E-02	Cl	1.1591E-01
Th-232	1.8559E-01	Cs-133	4.0948E-02
Cs-135	5.1615E-03	U-234	3.2794E-04
U-236	1.0415E-03	Zn[b]	6.4636E-02
U-235	4.3514E-03	U-238	1.8666E+00
Pu-238	5.1819E-03	Pu-239	1.2412E-02
Pu-240	2.2773E-03	Pu-241	9.6857E-04
Pu-242	1.9168E-04		
Density at 25 °C = 2.85 g/cm^3 (Ref. 8, p. 2.2.1.1-4)			

NOTES: [a] Ba-138 was used in the input data for the MCNP computer code (see Assumption 3.17).
[b] Replaced by Al in the input data for the MCNP computer code (see Assumption 3.16).
Source: Ref. 7, p. 7.

In Section 5.2.1.5, effect of clay accumulation inside the DOE SNF canister is calculated. Prebreach clay is degraded material formed (results of the degradation of the web-like structure, the HLW glass-pour canister, and the HLW glass) prior to breach of the DOE SNF canister. Post-breach clay is degraded material formed after breach of DOE SNF canister. Chemical

composition of clayey material for prebreach of the DOE SNF canister is presented in Table 5-9. Also given in the table is an alternate composition that results due to the uncertainties in determining the composition of the clay.

Table 5-9. Chemical Composition of Prebreach[a] Clay

Element/ Isotope	Wt%	Alternate Wt%	Element/ Isotope	Wt%	Alternate Wt%
Al	0.809223	0.99187795	Mn	1.042006	0.92724902
Ba	0.050423	0.06264702	Na	0.032564	0.03549077
Ca	0.393772	0.41688153	Ni	4.329494	3.33401455
Cr	0.019012	0.02362058	P	0.029762	0.02645764
F	0.006085	0.00540846	Pu-238	0.002139	0.00262213
Fe	46.2609	45.2739812	Pu-239	0.005124	0.00628069
H	0.188509	0.2161142	Pu-240	0.00094	0.00115235
O	36.21548	37.0260512	Pu-241	0.0004	0.00049011
K	0.037776	0.03423248	Pu-242	7.91E-05	9.6993E-05
Mg	0.13564	0.16533455	Si	10.44068	11.4499965

NOTE: [a] Degraded material at 59473 years (36145 years alternate) just prior to breach of DOE SNF canister – minerals only.
Source: Ref. 9, EQ6 file "N01A2204.6l".

The chemical composition of the clayey material for post-breach of the DOE SNF canister is presented in Table 5-10. Due to uncertainties in determining this composition another composition is included and is referred to as the alternate post-breach clay. Isotopes of Th and U in the clayey material are neglected since their contents are insignificant (< 0.003%) while the Pu content, which is also small, is included to be conservative.

Table 5-10. Chemical Composition of Post-Breach Clay

Element/ Isotope	Wt%	Alternate Wt%	Element/ Isotope	Wt%	Alternate Wt%
O	36.637709	36.644428	Na	0.028586	0.028585
H	0.235927	0.235986	Ni	4.047384	4.047006
Fe	45.288889	45.284345	Si	9.716287	9.714534
Al	2.370214	2.370604	Gd	0.016784	0.016781
Ba	0.046340	0.046144	C	0.004036	0.004034
Ca	0.350825	0.350755	Pu-238	0.001968	0.001968
F	0.005825	0.005822	Pu-239	0.004714	0.004714
P	0.031798	0.031787	Pu-240	0.000865	0.000865
K	0.033922	0.033915	Pu-241	0.000368	0.000368
Mg	0.137909	0.137916	Pu-242	0.000073	0.000073
Mn	1.039578	1.039369			

Source: Ref. 9, p. 43.

The composition of the tuff material that may surround the WP is given in Table 5-11.

Table 5-11. Chemical Composition of Tuff[a]

Element	Weight Percent	Element	Weight Percent
Si	35.938182	K	4.0954954
Al	6.747377	Ti	0.0599763
Fe	0.6533934	P	0.0087345
Mg	0.1508646	Mn	0.05425
Ca	0.4005072	O	49.226086
Na	2.6651339		

NOTE: [a] Bulk density used: 2.245 g/cm^3 and porosity used: 0.117 (Ref. 13, Table 1).
Source: Ref. 14, p. F32, Table 2.

The composition for the aluminum shot fill material that is used as filler in the DOE SNF canister is given in Table 5-12. The shot is composed primarily of aluminum with some small amount of $GdPO_4$ that is used as a neutron absorber. The compositions are given for various weight percentages of gadolinium in the aluminum-gadolinium phosphate shot. The void fraction of the shot is 0.4667 and water is assumed to fill the voids between the shot (see Assumption 3.19).

Table 5-12. Chemical Composition (weight percent) of the Water Saturated Aluminum Shot Fill Material[a] for Various Weight Percents of Gadolinium

Element	Weight Percent Gadolinium in Aluminum-Gadolinium Phosphate Shot				
	0%	0.1%	0.5%	1.0%	2.0%
Al	75.5220	75.4145	74.9841	74.4452	73.3645
O	21.7386	21.7572	21.8318	21.9251	22.1123
H	2.7394	2.7379	2.7318	2.7241	2.7088
Gd	0	0.0755	0.3780	0.7566	1.5159
P	0	0.0149	0.0744	0.1490	0.2986

NOTE: [a] Void fraction in fill is 0.4667.

5.2 DESCRIPTION

The number densities used throughout Section 5 are calculated using the following equation:

$$N = (m/V) \times N_A / M$$

where

N = the number density in atoms/cm^3,
m = the mass in grams,
V = the volume in cm^3,
N_A= the Avogadro's number (0.6022 E+24 atoms/mole, Ref. 12, p. 59),
M = the atomic mass in grams per mole.

The volumes of cylinder segments (volume = area of the segment of a circle × length of the cylinder) are also calculated throughout Attachment III. The equation for the segment of a circle is shown below:

$$\text{Area of a Segment of a Circle} = \left(R^2 \cos^{-1}\left(\frac{R-h}{R}\right) - (R-h)\sqrt{2Rh-h^2} \right)$$

where

R = the cylinder radius,
h = the height of the segment.

For degradation of basket and/or DOE SNF canister cases, the iron content of the stainless steel is assumed to degrade into goethite, FeOOH, with a density of 4.264 g/cm^3 (Ref. 11, p. 240). The other constituents of the stainless steel are neglected in the calculations. The codisposal WP is assumed to be fully reflected by water and/or tuff for all cases (see Assumption 3.5).

5.2.1 Intact Fuel Assembly

The Shippingport LWBR SNF assembly is left intact for all cases outlined in this section. Figure 5-5 gives a representation of the intact case. The fuel number density is determined by using the fuel composition data, given in Table 5-1 and the data obtained from Ref. 4. Number densities, volumes and other quantities of interest are calculated by the Excel spreadsheet named "fuel_mass.xls" that is listed in Attachment III. In calculating all number densities used in these calculations, Avogadro's number is from Ref. 12, isotopic atomic weights are taken from Ref. 10 and elemental atomic weights and isotopic abundances are taken from Ref. 12. These data are established facts and are therefore considered as accepted data due to the nature of the references cited therein. The LWBR fuel assembly is modeled in the DOE SNF canister with the basket plates present. Void spaces between fuel pins inside the interior of the assembly are assumed to be fully flooded with water while voids external to the assembly but inside the DOE SNF canister are filled with either water or saturated fill material. The total gadolinium content in the DOE SNF canister is given in Table 5-13. It is obtained by assuming that the fill material fills all voids inside the entire DOE SNF canister but outside the assembly duct, i.e., no fill material fills any voids inside the assembly duct. The DOE SNF canister is inside the codisposal WP, which contains five HLW glass pour canisters and the WP is fully reflected with either water or dry tuff. The baseline case for this calculation is 1 wt.% Gd in the aluminum shot mixed with $GdPO_4$.

Table 5-13. Gadolinium Content in DOE SNF Canister

	Weight Percent Gadolinium in Al-$GdPO_4$				
	0%	0.1%	0.5%	1.0%	2.0%
Gadolinium Mass (kg)	0.00	0.63	3.14	6.31	12.71

5.2.1.1 DOE SNF Canister in Codisposal WP

The DOE SNF canister, fuel assembly and codisposal WP are intact as shown in Figure 5-5. Values of k_{eff} for the intact fuel assembly are calculated based on the fuel assembly centered in the DOE SNF canister and the DOE SNF canister centered inside the WP for most cases. For cases where the DOE SNF canister is assumed to be fully flooded with water, the water density is varied between 0.2 and 1.0 g/cm^3 to find the highest value of k_{eff}. Empty spaces outside the DOE SNF canister but inside the WP are filled with water and the effect of water density variations in these spaces is also determined. The fuel pin gaps are fully flooded with water for all cases. Cases are presented where the water in the DOE SNF canister is replaced with saturated fill material with and without gadolinium. A case using the actual rather than the modeled pitch is also presented. The modeled pitch is 0.9398 cm (0.37 in.).

5.2.1.2 Water Intrusion into Fuel Void Space

The effect of water intrusion into the fuel void spaces (see Section 5.1.1) is determined. The void fraction is determined from the bulk and theoretical density and is easily shown to be given by $1-\rho_b/\rho_{th}$ where the bulk and theoretical densities are given by ρ_b and ρ_{th}, respectively. Water densities in the fuel void spaces are varied between 0.5 and 1.0 g/cm^3 to find the highest value of k_{eff}. The DOE SNF canister contains saturated fill material (with and without gadolinium) for all cases except one. The same intact configuration of Figure 5-5 is used in the calculation except where the positions of the contents of the WP are varied to account for possible effects of gravity.

5.2.1.3 Fuel Assembly in DOE SNF Canister with Degraded Basket Plates and Fill Material

The basket plates (see Figure 5-3) have completely degraded and converted to goethite. For most cases the aluminum fill material is assumed to have degraded to diaspore. The intact fuel assembly is positioned at the bottom of the DOE SNF canister and the effect of the materials either mixing together or remaining separate and forming layers around the fuel assembly is determined. Any portion of the DOE SNF canister not filled with material is filled with water. The water volume fraction in the material layers is varied. All other components in the DOE SNF canister and codisposal WP are represented as being fully intact. The coolant passages in the fuel assembly are filled with water. Figure 5-6 shows a cross-sectional view of the WP where separate layers of goethite and diaspore have formed. This configuration is a very unlikely case, but it is conservative. Due to the differences in components corrosion rates, the web structure and HLW glasses inside the WP will always degrade first. There is also a variation where the degraded components inside the DOE SNF canister mix together instead of forming stratified layers since there is no probable mechanism for causing material separation. Note also in Figure 5-6 that a pointed end of the assembly is downward. The assembly can also be rotated 30° about its center so that the flat side of the assembly is downward. The gadolinium content in the aluminum fill material is varied. The fuel pin gaps and fuel voids are flooded with full density water for all cases.

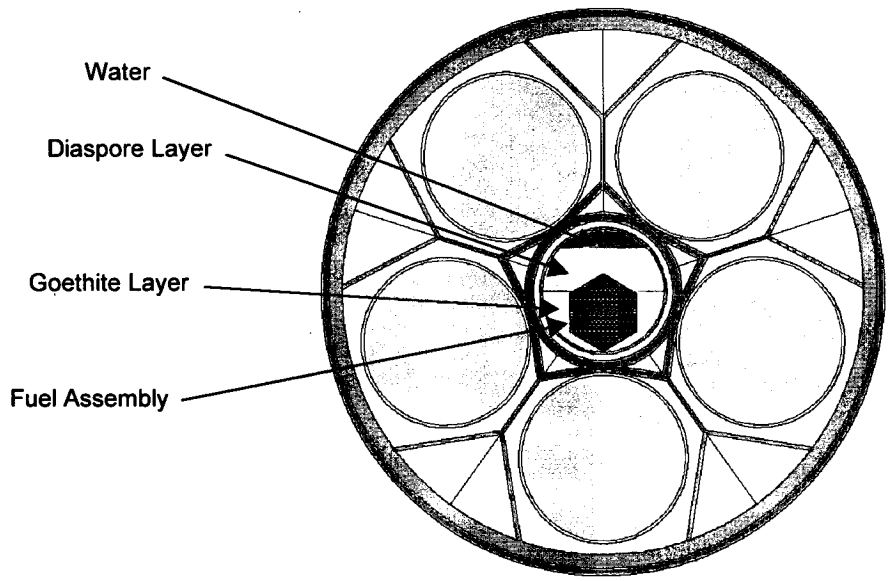

Figure 5-6. Cross-Sectional View of the Configuration with Fuel Assembly in DOE SNF Canister and Degraded Basket Plates and Fill Material

5.2.1.4 Fuel Assembly in DOE SNF Canister with Degraded Contents in the WP

The effect of clay (prebreach) formation in the WP due to the total degradation of the HLW glass pour canisters, web-like structure and the WP inner barrier is calculated for an intact DOE SNF canister. Cases with the contents of the DOE SNF canister completely intact, as in Section 5.2.1.2, and with the basket plates and fill material completely degraded, as in Section 5.2.1.3, are investigated. The DOE SNF canister is positioned in the prebreach clay layer inside the WP. The remainder of the WP is filled with water. Figure 5-7 shows a cross-sectional view of the DOE SNF canister positioned near the center of the prebreach clay layer in the WP. For this case the basket plates and fill material have degraded inside the DOE SNF canister. Prebreach clay is formed from the degradation of material in the WP prior to the breach of the DOE SNF canister, while post-breach clay is degraded material formed after the DOE SNF canister breach. The fuel pin gaps and fuel voids are flooded with full density water for all cases.

The configuration shown in Figure 5-7 is not a likely case, but is conservative. The most likely case is that the intact DOE SNF canister would fall somewhere near the bottom of the WP surrounded by a mixture of goethite and diaspore which in turn is covered by water which fills the remainder of the WP. There is no probable mechanism identified for causing significant segregation/separation of the two layers.

The effect of replacing the water reflector around the WP with dry tuff is also investigated. Any changes outside the DOE SNF canister, e.g., prebreach clay in the WP, tuff reflector outside the WP, intact components in the WP, etc., are, in a general sense, variations of the boundary condition on the DOE SNF canister. As a limiting case, the MCNP code allows a perfect

reflector to be placed around the DOE SNF canister. This boundary condition specifies that all neutrons crossing the outside surface of the DOE SNF canister are reflected back into the DOE SNF canister.

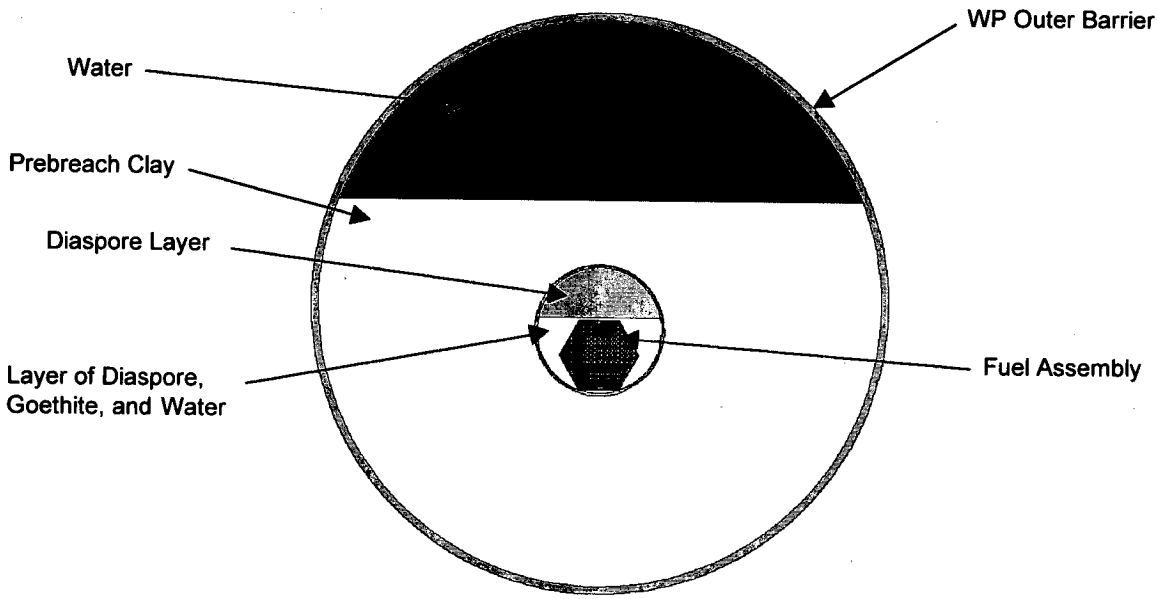

Figure 5-7. Cross-Sectional View of DOE SNF Canister with Degraded Basket Plates and Fill Material in WP Filled with Prebreach Clay

5.2.1.5 Intact Fuel Assembly with Fully Degraded DOE SNF Canister and Contents of the WP

In this scenario, the materials surrounding the fuel assembly are assumed to be completely degraded. The DOE SNF canister, fill material, basket plates, the five HLW glass pour canisters, inner barrier of the WP and the web-like structure in the WP are fully degraded. Two different types of cases are treated here, one where the WP is filled with degradation products from the DOE SNF canister that have not chemically reacted with the prebreach clay, and the other where the WP is filled with post-breach clay. For the former type, the materials are assumed to form both a single, homogeneous layer and separate distinct layers each composed of different materials. For both types, varying volume fractions of water mixed with the materials are studied. The location of the assembly relative to the center of the WP is also varied. Cases are also treated where material mixed with water fills the assembly coolant passages between fuel pins. Figure 5-8 shows a cross-sectional view of the assembly surrounded by and just below the surface of the prebreach clay, and a layer of goethite mixed with diaspore covers the prebreach clay. This figure shows the fuel assembly placed near the bottom of the WP. Water fills the remainder of the WP. For this case the coolant passages inside the assembly are filled with water, which is a very conservative representation since it is anticipated that the filling process would fill part if not all of the voids inside the assembly with fill material. The fuel pin gaps and

fuel voids are filled with full density water for all cases. The water reflector around the WP is replaced with dry tuff of different thicknesses and with partially and completely saturated tuff.

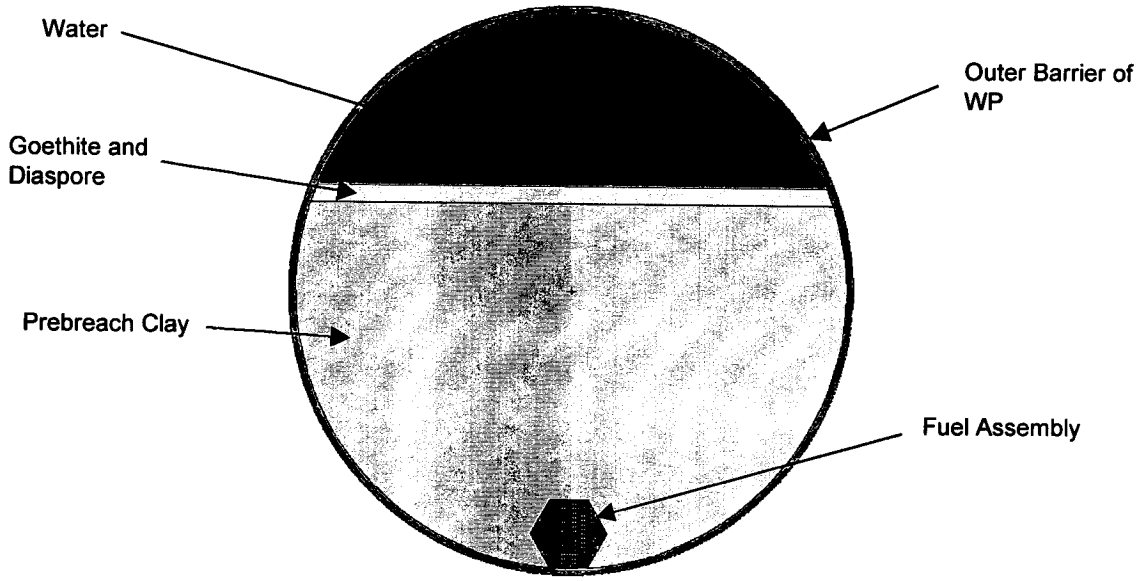

Figure 5-8. Cross-Sectional View of the Intact Fuel Assembly in the Degraded WP and DOE SNF Canister

5.2.2 Degraded Fuel Assembly

The Shippingport LWBR SNF fuel assembly is either partially or fully degraded before the degradation of other components for all cases in this section. Again, due to the differences in corrosion rates, the cases discussed in this section are not likely, but are presented as conservative limiting cases. Here partial degradation is defined to be any level of degradation of the fuel assembly that leaves the fuel pellets intact. For example, this would include loose fuel pins due to the degradation of the assembly ducts and fuel pin clips/spacers as well as fuel pellets that have separated in the axial direction. Fully degraded fuel assumes the fuel pellets have degraded to the point that the fuel can form a homogeneous mixture with water, goethite, diaspore and/or clay. The degraded fuel is assumed to remain chemically unchanged. The codisposal WP is fully reflected by water (for most cases) and/or tuff. Number densities, volumes and other quantities of interest are calculated by the Excel spreadsheet named "fuel_mass.xls" that is listed in Attachment III.

5.2.2.1 Partially Degraded Fuel Assembly with Degraded Pin Clips/Spacers in DOE SNF Canister

The fuel pin clips/spacers holding the pins in the assembly are assumed to have degraded. All other components in the DOE SNF canister and WP are modeled as being fully intact. The spacing between fuel pins is varied from the initial pitch of the fuel pins until the fuel pins are

touching. The fuel pins are assumed to remain in a triangular array centered in the assembly duct. A cross-sectional view of the DOE SNF canister with the fuel pins touching in the assembly is shown in Figure 5-9. Water fills the coolant passages inside the assembly duct, the fuel pin gaps and voids in the fuel for all cases. Cases with different boundary conditions on the DOE SNF canister are also investigated.

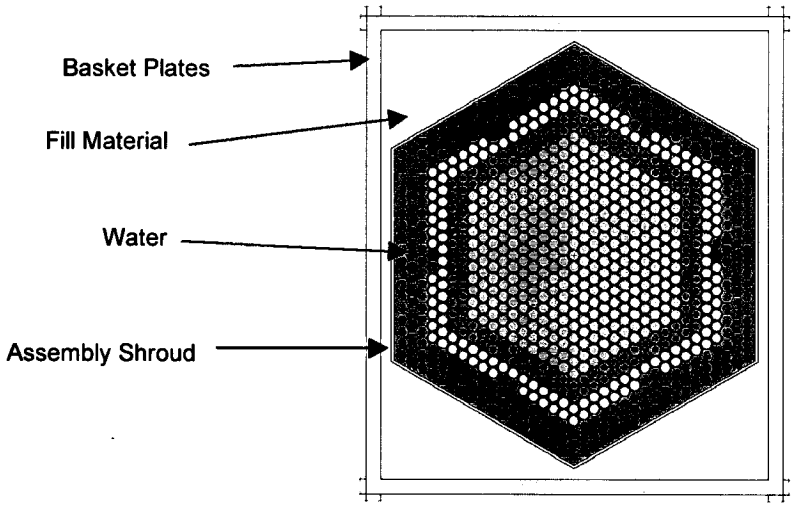

Figure 5-9. Cross-Sectional View of the Fuel Assembly with Touching Fuel Pins

5.2.2.2 Partially Degraded Fuel Assembly with Axially Separated Fuel Pellets in DOE SNF Canister

The fuel pellets separate in the axial direction with uniform separation between pellets while remaining in the intact fuel rods. This requires that the fuel pins become fictitiously long for cases with larger separations. The fuel pins retain their original pitch and axial alignment in the assembly. Water fills voids between pellets and elsewhere inside the assembly. The voids in the fuel pellets are also filled with water. All other components in the DOE SNF canister are modeled as being fully intact.

5.2.2.3 Partially Degraded Fuel Assembly with Degraded Assembly Duct in DOE SNF Canister

In this scenario the assembly duct and the fuel pin clips/spacers are fully degraded. The corrosion products from the degraded ducts are neglected. All other components in the DOE SNF canister are modeled as being fully intact. The loose fuel pins from the assembly are scattered in the basket assembly and are stacked in a triangular lattice. Once the fuel pins become loose there is a very large number of possible fuel pin configurations due to the different ways of permuting (arranging) the four different types of fuel pins from the assembly. Rather than attempt to investigate any significant number of these configurations, all the fuel pins of the assembly are replaced by one of the four different types of fuel pins (see Table 5-3 for a list of

the fuel rod types) to determine the most reactive type. The pitch of the lattice is varied from that of the original assembly to that for touching pins. Figure 5-10 shows a cross-sectional view of a configuration where the fuel pins are all of the same type and have the same pitch as the original assembly. Cases are presented where the fill material has degraded to diaspore mixed with varying amounts of water. In some cases the pins are surrounded by water while for others degradation products surround them. The fuel pin gaps and fuel voids are filled with water for all cases.

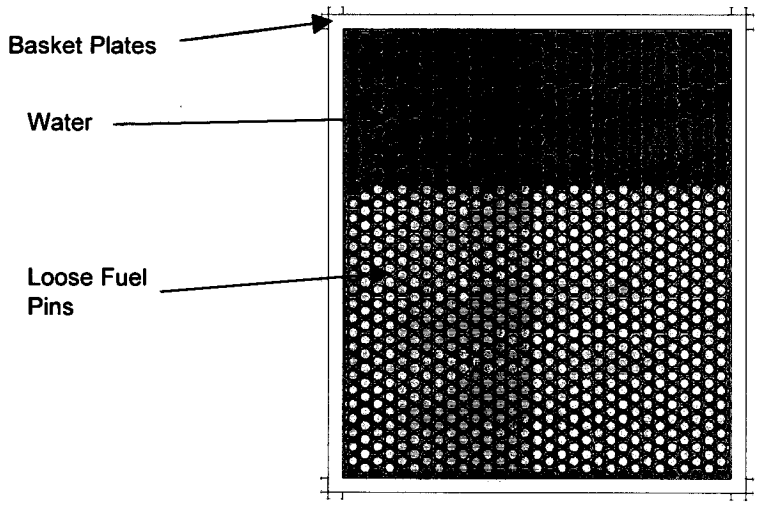

Figure 5-10. Cross-Sectional View of Loose Fuel Pins in the Basket Assembly

5.2.2.4 Partially Degraded Fuel Assembly with Degraded Assembly Duct and Basket Plates in DOE SNF Canister

The assembly duct surrounding the assembly, the fuel pin clips/spacers and the basket plates are fully degraded. The corrosion products from the degraded duct are neglected. The DOE SNF canister and fuel pins are modeled as being fully intact while the other components of the DOE SNF canister are modeled as being fully degraded. The fuel pins from the assembly are scattered in the DOE SNF canister and are stacked in rows along the bottom of the DOE SNF canister. Due to the curvature of the DOE SNF canister, different parts of the array are in a triangular, square and irregular lattice. The fuel pins are interspersed in the degradation products formed from the basket plates and fill material. Cases are presented with layers of these materials mixed together and mixed with varying volume fractions of water. The most reactive type of fuel pin found in Section 5.2.2.3 replaces all fuel pins in the assembly. Figure 5-11 shows a cross-sectional view of a configuration in the DOE SNF canister where the fuel pins are all of the same type and have a pitch of 1.25 cm. The pitch of the fuel pins is varied for a variety of cases. The fuel pin gaps and fuel voids are filled with water for all cases. For most cases the contents of the WP are intact while for other cases the WP contains prebreach clay.

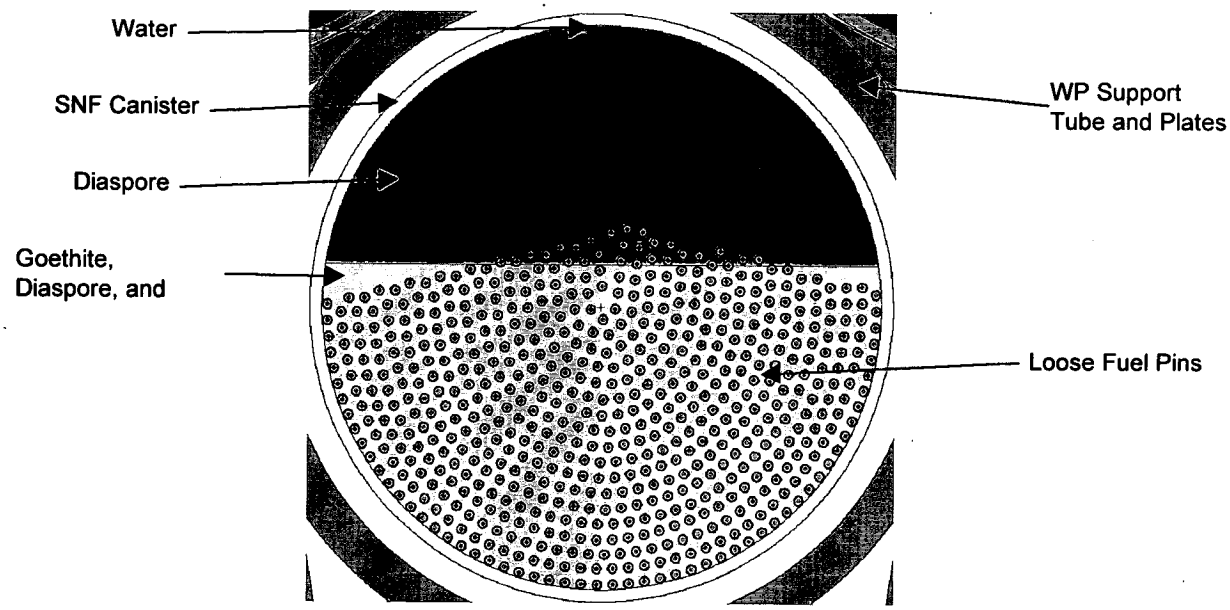

Figure 5-11. Cross-Sectional View of Loose Fuel Pins in the DOE SNF Canister

5.2.2.5 Partially Degraded Fuel Assembly with Fully Degraded DOE SNF Canister and WP Contents

The DOE SNF canister except for the fuel pins, fill material, basket plates, the five HLW glass pour canisters, inner barrier of the WP and the web-like structure of the WP are fully degraded. The loose fuel pins are assumed to be stacked in rows at the bottom of the WP. Due to the curvature of the WP different parts of the array are in a triangular, square and irregular lattice. Two different types of cases are treated here, one where the WP is filled with degradation products from the DOE SNF canister that have not chemically reacted with the prebreach clay, and the other where the WP is filled with post-breach clay. For the former type, the materials are assumed to either form a single, homogeneous layer or to form separate but distinct layers. For both types, varying volume fractions of water mixed with the materials are studied. The fuel pins are interspersed in these degradation products. The most reactive type of fuel pin that was found in Section 5.2.2.3 replaces all fuel pins. Figure 5-12 shows a cross-sectional view of the WP where the fuel pins are all of the same type in a configuration having a pitch of 1.25 cm. The fuel pins in this configuration are bunched together which is more reactive than if the pins were spread out as shown in Figure 5-13, which also has a pitch of 1.25 cm. Figure 5-13 also shows the pins surrounded by and below layers of different materials than what is shown in Figure 5-12. The configuration shown in Figure 5-13 assumes that the DOE SNF canister degrades faster than the WP components, which is not a likely case, but is analyzed for completeness. Cases are given for different values of the pitch. Cases are also presented where the pins are covered by post-breach clay with varying volume fractions of water. In these cases the water content is increased until the WP is completely filled with pins and saturated material. The fuel pin gaps and fuel pellet voids are filled with water for all cases.

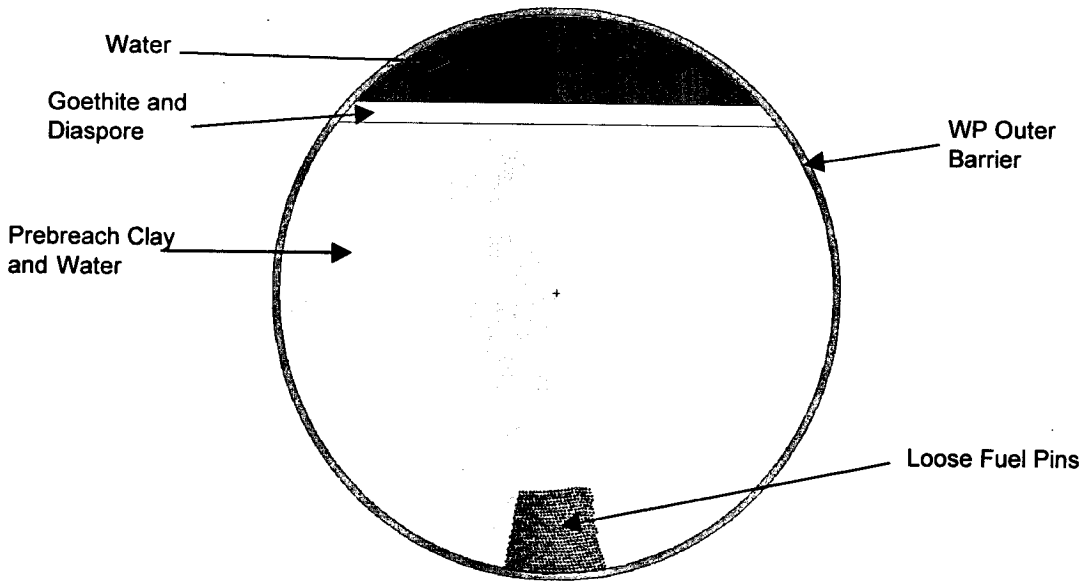

Figure 5-12. Cross-Sectional View of Loose Fuel Pins in the WP

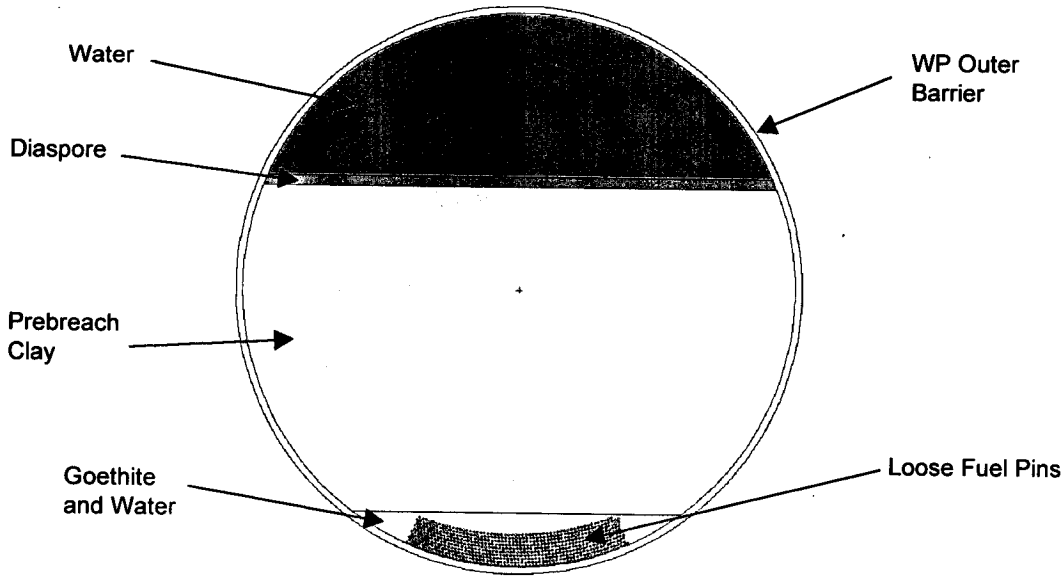

Figure 5-13. Cross-Sectional View of Loose, Spread Out Fuel Pins in the WP

5.2.2.6 Fully Degraded Fuel in Intact DOE SNF Canister

The contents of the DOE SNF canister are assumed to have settled at the bottom of the intact DOE SNF canister that is horizontally positioned. The axial loading of goethite, diaspore and degraded fuel is preserved in all cases. The thoria content of the fuel is neglected for most cases. Cases are presented where these materials form separate layers or mix together to form a smaller

number of layers. The volume fraction of water in the mixtures is varied. By neglecting the thoria content of the fuel, the amount of remaining fuel per unit axial length in each of the four axial regions (see Figure 5-1) is different though its composition is the same. Cases are presented where the water volume fraction in each of the four axial regions is slightly adjusted so as to give the same volume of material per unit length for the entire fuel mixture. A case is also presented where the amount of fuel mixture in three of the axial regions is increased from what is actually present so as to give the same volume per unit length for the entire fuel mixture. This results in there being more fuel modeled than what is actually in an assembly. The unoccupied volumes in the DOE SNF canister are filled with water. Figure 5-14 shows a cross-sectional view of the DOE SNF canister that contains three different layers of degraded materials. The WP contents are either intact or have degraded to prebreach clay.

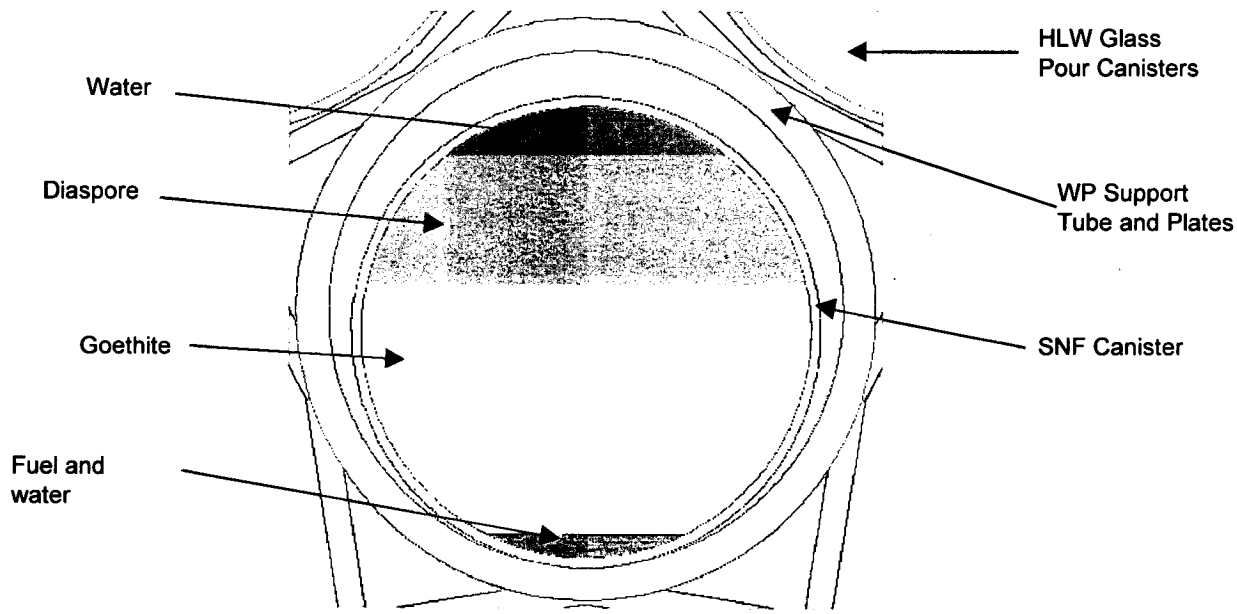

Figure 5-14. Cross-Sectional View of the Fully Degraded Fuel in the DOE SNF Canister

5.2.2.7 Fully Degraded Fuel, DOE SNF Canister and WP Contents

The DOE SNF canister and its contents, the five HLW glass pour canisters, the inner barrier of the WP, and the web-like structure of the WP are fully degraded and have settled on the bottom of the intact WP that is horizontally positioned. The axial loading of goethite, diaspore and degraded fuel is preserved in all cases and the thoria is neglected for most cases as in Section 5.2.2.6. Two different types of cases are treated, one where the WP is filled with degradation products that have not chemically reacted with the prebreach clay, and the other where the WP is filled with post-breach clay. For the former type, the materials are assumed to form both a single, homogeneous layer and separate layers composed of different materials. The volume fraction of water in the mixture layers is varied. As in Section 5.2.2.6, cases are presented where the amount of material is increased to give the same volume per unit length for the entire fuel

mixture. A case is also presented where the fuel mixture has been repositioned in the axial direction to give the same height of fuel along the axial direction. The unoccupied regions of the WP are filled with water. A cross-sectional view of the WP containing, degraded fuel, post-breach clay and water in three separate layers is shown in Figure 5-15.

5.2.2.8 Axial Redistribution of Fully Degraded Fuel in the DOE SNF Canister and WP

Fully degraded fuel is redistributed in the axial direction for cases where the degraded fuel is in the DOE SNF canister and in the WP. These cases are variations of cases from Sections 5.2.2.6 and 5.2.2.7 for fuel in the DOE SNF canister and WP, respectively, but the fuel does not preserve its axial loading. For these cases, the length of each of the four axial regions becomes either longer or shorter by the same amount, but the compositions of the fuel and other degraded materials remain unchanged. No mixing or redistribution between regions is considered.

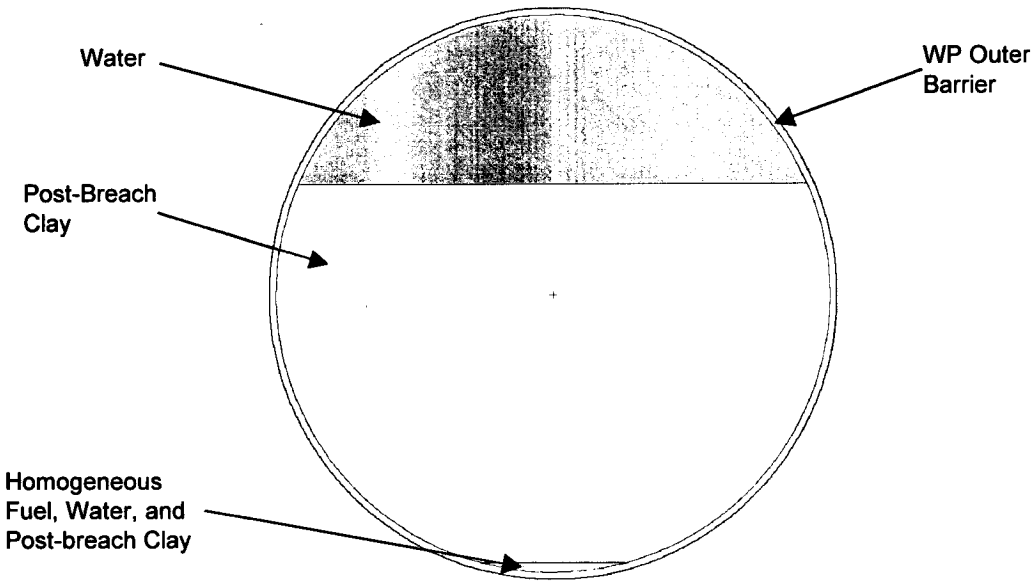

Figure 5-15. Cross-Sectional View of the Fully Degraded Fuel in the WP

5.2.3 Uranium Decay Effects

Due to the long time periods considered in degraded calculations the decay of the uranium isotopes must be considered. Decay times of interest here are 50,000, 100,000 and 150,000 years. The half-lifes and decay products for the uranium isotopes found in the LWBR fuel and Th-232 are given in Table 5-14 below. These isotopes decay by alpha emission. Selected cases from the scenarios described in previous sections are modified to account for the decay effects. The results of these calculations are given in Section 6.3.

Table 5-14. Decay Half-Life for Selected Isotopes

Isotope	Half-life (years)	Decay Product	Isotope	Half-life (years)	Decay Product
Th-232	1.40E+10	Ra-228	U-235	7.04E+08	Th-231
U-232	69.8	Th-228	U-236	2.34E+07	Th-232
U-233	1.59E+05	Th-229	U-238	4.47E+09	Th-234
U-234	2.46E+05	Th-230			

Source: Ref. 12, pp. 47-49.

5.2.4 Homogeneous Model of Intact Seed Assembly

A homogeneous representation of the intact seed assembly is developed. This can be useful in determining if fuels of the same group, i.e., Th/U oxide, can be bound by these results. The seed assembly contains 16.6 kg of fissile mass and has 4 different axial zones with linear loadings of 2.82 kg/ft (the bottom 42"), 2.20 kg/ft (the next 14"), 1.91 kg/ft (the next 14") and 1.63 kg/ft (the top 14"). To account for the complications caused by the non-uniform axial and radial fuel distribution in the seed assembly, different homogeneous cases are developed with varying levels of simplification. This ranges from cases that separately represent the various axial and radial fuel regions to a case where the fuel regions are homogeneously mixed together. A case is also given where the low zone fuel and the thoria steps are redistributed so that they extend over the entire axial length, as does the high zone fuel.

6. RESULTS

MCNP results for the intact and the degraded fuel assembly are provided in this section (Tables 6-1 through 6-22). Values of k_{eff}, the ratio of the number density of hydrogen to that of the fissile nuclides (H/X ratio) and the average energy of a neutron causing fission (AENCF) are provided. The k_{eff} value represents the average collision, absorption, and track length estimator from the MCNP calculations. The standard deviation (σ) represents the standard deviation of k_{eff} about the average combined collision, absorption, and track length estimate due to Monte Carlo calculation statistics. The H/X ratio is determined in the region containing the LWBR fuel. For the intact and the partially degraded cases, the H/X atom ratio is calculated for the fuel pin unit cell. For the fully degraded cases, the H/X atom ratio is calculated over the volume that contains the degraded fuel. Unless noted otherwise the H/X ratio listed in the tables is for the high zone fuel. The AENCF is the energy per source particle lost to fission divided by the weight per source neutron lost to fission from the "problem summary section" of the MCNP output. Also, Tables 6-1 through 6-22 contain the MCNP output file names used in the calculations. The Excel data file named "fuel_mass.xls" is used for the cases in these tables. Attachment III presents a detailed description of the worksheets from this data file. The compositions of the materials that make up the mixtures listed in the tables are listed by volume percent except for the gadolinium content in the fill material (weight percent) and unless noted otherwise. For the cases that contain gadolinium in the aluminum fill material and the aluminum has degraded to diaspore, the gadolinium is assumed to remain with the diaspore and the total amount of gadolinium in any given mixture is directly proportional to the amount of diaspore in that mixture. As mentioned in Section 5.2.1, the baseline is 1 wt.% Gd in the Al-$GdPO_4$ mixture (6.31 kg of Gd).

This document may be affected by technical product input information that requires confirmation. Any changes to the document that may occur as a result of completing the confirmation activities will be reflected in subsequent revisions. The status of the input information quality may be confirmed by review of the Document Input Reference System database.

6.1 RESULTS WITH INTACT FUEL ASSEMBLY

6.1.1 DOE SNF Canister in Codisposal WP

Values of k_{eff} for the intact fuel assembly positioned at the center of the DOE SNF canister placed in the codisposal WP, as described in Section 5.2.1.1, are calculated. Results are presented with varying densities of the water in the DOE SNF canister and in the WP (see also Figure 5.5). The WP is reflected externally (outside of the WP) by full density water. These cases are summarized in Table 6-1. Also presented are cases where the DOE SNF canister and contents of the WP are displaced to account for gravity, and where the WP contains full density water only in the support tube around the DOE SNF canister. The fuel pin gaps are completely flooded for all cases in this section. No neutron absorber (Gd) was considered in the DOE SNF canister for these cases.

Table 6-1. Intact Fuel Assembly Results with Varying Water Density In DOE SNF Canister and WP

DOE SNF Canister Water Density (g/cm^3)	WP Water Density (g/cm^3)	$k_{eff} + 2\sigma$	H/X Ratio	AENCF (keV)	MCNP Output File Name
Comment: The following cases investigate the effect of varying water density inside the DOE SNF canister					
0.2	0 (dry WP)	0.4374	10.0	274.8	cod1_.2.o
0.4	0 (dry WP)	0.5752	20.1	189.2	cod1_.4.o
0.6	0 (dry WP)	0.6925	30.1	145.7	cod1_.6.o
0.8	0 (dry WP)	0.7976	40.2	117.8	cod1_.8.o
1.0	0 (dry WP)	0.8872	50.2	101.1	cod1.o
Comment: The following cases investigate the effect of varying water density outside the DOE SNF canister					
1.0	0.1	0.8886	50.2	100.7	cod1_o.1.o
1.0	0.2	0.8890	50.2	101.9	cod1_o.2.o
1.0	0.4	0.8892	50.2	100.1	cod1_o.4.o
1.0	0.6	0.8863	50.2	100.8	cod1_o.6.o
1.0	0.8	0.8856	50.2	100.9	cod1_o.8.o
1.0	1.0	0.8865	50.2	100.7	cod1_o1.o
[a]1.0	1.0	0.8875	50.2	100.8	cod1+wa.o
[b]1.0	0 (dry WP)	0.8905	50.2	100.0	cod1+g.o

NOTES: [a] Water in center support tube only of the WP (void outside the support tube).
[b] DOE SNF canister and contents of the WP are displaced to account for the effect of gravity.

The results show that the intact configuration is undermoderated and the presence of water outside the DOE SNF canister has a minor effect on the k_{eff} of the system.

In the next set of cases the water in the DOE SNF canister is replaced with water saturated aluminum fill (Table 5-12) without neutron absorber. These results are given in Table 6-2. The empty spaces in the WP are treated as voids. One case uses the actual pitch, 0.936244 cm (0.3686 in.), which is slightly smaller than the modeled pitch, 0.9398 cm (0.37 in.), while another case uses gadolinium in the fill material.

Table 6-2. Results of Intact Fuel Assembly with Fill Material in the DOE SNF Canister

Description	Pitch (cm)	$k_{eff} + 2\sigma$	H/X Ratio	AENCF (keV)	MCNP Output File Name
Uses the actual value for the fuel pin pitch	0.936244	0.8926	49.3	103.5	cod1+al1a.o
Uses the modeled value for the fuel pin pitch	0.9398	0.8993	50.2	100.8	cod1+al1.o
Similar to previous case, but 0.1% Gd in Al-$GdPO_4$ mix	0.9398	0.8537	50.2	109.7	cod1+al1_.1.o

It should be noted that the case with the modeled value of the fuel pin pitch rather than the actual value is slightly more conservative.

6.1.2 Water Intrusion into Fuel Void Space

MCNP results for water intrusion into the fuel pellets as described in Section 5.2.1.2 are summarized in this section. Water fills the fuel pin gap, the fuel voids and the pellet voids. The

void fractions are 3.690%, 3.314%, and 3.215% in the low zone fuel, high zone fuel and thoria, respectively. The void fraction is completely filled for all cases except for two where it is 50% and 90% filled as noted in the table. Values of k_{eff} for these cases are listed in Table 6-3. The DOE SNF canister is filled with water saturated aluminum fill material for all cases except the first one listed in the table where the DOE SNF canister is filled with water. The empty spaces in the waste package are treated as voids and the waste package is reflected by full density water. Repositioning of the glass canisters relative to the SNF canister had a a negligible effect on the results. Further, given the distance from the DOE SNF canister to the waste package surface, the conditions outside the waste package are not important at this point in the analysis.

Table 6-3. Results for Water Intrusion into Void Volume Inside Fuel Pins

Description	Gd Content in Al-$GdPO_4$ mix (%)	$k_{eff} + 2\sigma$	H/X Ratio	AENCF (keV)	MCNP Output File Name
Water in DOE SNF canister and void volume in pins filled with full density water	0	0.9001	51.9	99.3	cod1+st.o
Saturated aluminum fill material in DOE SNF canister and void volume in pins filled with full density water	0	0.9115	51.9	99.4	cod1+al1+st.o
Similar to previous case, but water fills 50% of the void volume in pins	0	0.9053	51.1	100.5	cod1+al1+st_.5.o
Similar to previous case, but water fills 90% of the void volume in pins	0	0.9081	51.8	100.2	cod1+al1+st_.9.o
Similar to case cod1+al1+st.o, but contents of WP displaced due to gravity	0	0.9140	51.9	99.6	cod1+al1+st+g.o
Similar to cod1+al1+st.o case, but with glass canisters positioned at closest possible position to the center of the WP	0	0.9111	51.9	99.4	cod1+al1+st_c.o
Saturated aluminum fill material containing Gd in DOE SNF canister	0.1	0.8659	51.9	106.5	cod1+al1_.1+st.o
Similar to previous case, but glass canisters positioned at closest possible position to the center of the WP	0.1	0.8657	51.9	106.9	cod1+al1_.1+st_c.o

The most reactive condition for the system is with the void space inside the pins filled with full density water.

6.1.3 Fuel Assembly in DOE SNF Canister with Degraded Basket Plates and Fill Material

Results are given in Table 6-4 for the intact fuel assembly in the DOE SNF canister with degraded basket plates, as described in Section 5.2.1.3. The typical case is shown in Figure 5-6. Cases are presented with different layers of goethite, aluminum fill and diaspore and with different volume fractions of water in these materials. The complete segregation of the layers is extreme with no known mechanism, thus the corresponding configurations are unlikely. Cases are also presented where diaspore, goethite and water are mixed together. Water occupies the remaining portion of the DOE SNF canister. Water fills the voids between fuel pins inside the assembly. The contents of the waste package are treated as intact, and the rest of the waste package is considered dry. The waste package is reflected by full density water.

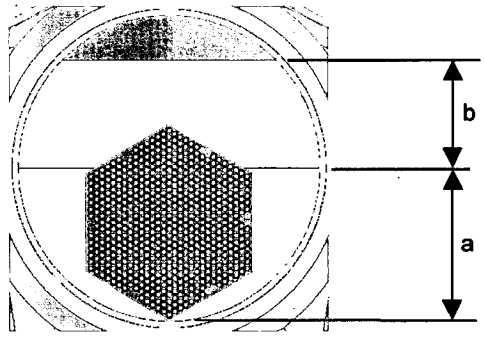

Figure 6-1. Cross-Sectional View of the DOE SNF Canister Showing the Layer Thicknesses

Table 6-4. Results for Intact Assembly in DOE SNF Canister with Degraded Components

Description[a]	Gd Content in Al-$GdPO_4$ Mix (%)	Dimension "a" (see Figure 6-1) (cm)	Dimension "b" (see Figure 6-1) (cm)	$k_{eff} + 2\sigma$	H/X Ratio	AENCF (keV)	MCNP Output File Name
Assembly surrounded by dry goethite and covered by wet Al fill (see Figure 6-1)	0.1	21.84	21.97	0.9092	51.9	101.9	f_f+.1%.o
Similar to previous case, but assembly rotated so that assembly flat is down	0.1	21.84	21.97	0.9098	51.9	101.7	f_f+.1%_t.o
Assembly surrounded by dry goethite and covered by wet Al fill	1	21.84	21.97	0.9015	51.9	102.9	f_f+1%.o
Similar to previous case, but assembly rotated so that flat is down	1	21.84	21.97	0.9028	51.9	102.9	f_f+1%_t.o
Assembly surrounded by dry goethite and covered by dry diaspore fill	0.1	21.84	15.53	0.9221	51.9	99.9	f_d+.1%.o
Similar to previous case, but assembly rotated so that flat is down	0.1	21.84	15.53	0.9215	51.9	101.5	f_d+.1%_t.o
Assembly surrounded by dry goethite and covered by dry diaspore fill	1	21.84	15.49	0.9146	51.9	101.2	f_d+1%.o
Similar to previous case, but assembly rotated so that flat is down	1	21.84	15.49	0.9171	51.9	100.9	f_d+1%_t.o
[b]Assembly surrounded by goethite mixed with 20% water and covered by dry diaspore	1	23.20	16.19	0.9160	51.9	100.5	f.8_d+1%_t.o
[b]Assembly surrounded by goethite mixed with 40% water and covered by dry diaspore	1	25.47	18.34	0.9166	51.9	99.6	f.6_d+1%_t.o
[b]Assembly surrounded by dry diaspore and covered by dry goethite	0.1	30.81	6.57	0.8985	51.9	104.3	d_f+.1%.o
[b]Assembly surrounded by dry diaspore and covered by dry goethite	1	30.78	6.56	0.8734	51.9	107.5	d_f+1%.o
[b]Assembly surrounded by dry diaspore and covered by goethite mixed with 40% water	0.1	30.81	13.01	0.9007	51.9	103.8	d_f.6+.1%.o
[b]Assembly surrounded by wet Al fill and covered by dry goethite	0.1	37.88	5.93	0.8693	51.9	105.7	fil_f+.1%.o
[b]Assembly surrounded by dry Al fill and covered by dry goethite	0.1	37.88	5.93	0.8924	51.9	107.3	fil-w_f+.1%.o

Description[a]	Gd Content in Al-$GdPO_4$ Mix (%)	Dimension "a" (see Figure 6-1) (cm)	Dimension "b" (see Figure 6-1) (cm)	$k_{eff} + 2\sigma$	H/X Ratio	AENCF (keV)	MCNP Output File Name
[b]Assembly surrounded by goethite, diaspore (5%) and water (38%) and covered by dry diaspore [0.175][c]	1	25.95	17.86	0.8935	51.9	102.5	f.6+d_d+1%_t.o
[b]Assembly surrounded by goethite, diaspore (10%) and water (36%) and covered by dry diaspore [0.369][c]	1	26.49	17.32	0.8866	51.9	104.2	f.6+d10%_d+1%_t.o

NOTES: [a] For all cases, as shown in Figure 6-1, the surrounding layer is the lower one (with thickness a) and the covering layer is the middle one (with thickness b).
[b] Assembly is rotated with flat down.
[c] The Gd content in the layer with fuel in units of kg.

The results in Table 6-4 show that the highest k_{eff} of the baseline system is obtained for the case with goethite mixed with 40% water surrounding the assembly, and all the diaspore (dry layer) covering the assembly. However, a small amount of diaspore containing Gd present in the mixture that forms the surrounding layer in this overly conservative case reduces the k_{eff} significantly.

6.1.4 Results for Fuel Assembly in DOE SNF Canister with Degraded Contents in the WP

The effect of clay formation in the WP as described in Section 5.2.1.4 is calculated for all the contents of the DOE SNF canister intact and for only the assembly intact. For the contents of the DOE SNF canister intact, some of the more reactive cases in Table 6-3 are modified by putting prebreach clay (see composition in Table 5-9) in the WP. These results and results with tuff reflection of the WP (intact and degraded contents) are listed in Table 6-5. These cases with different contents in the WP or different reflectors around the WP are, in a general sense, variations in the DOE SNF canister boundary condition. The MCNP code allows a reflective boundary condition to be placed on the outside surface of the DOE SNF canister. This represents "perfect" neutron reflection and is run to demonstrate the effects of neutron leakage. These cases are overly conservative and are used for determining the importance of waste package contents on the DOE SNF canister. These results are also listed in Table 6-5.

Table 6-5. Results for Intact DOE SNF Canister with Different Canister Boundary Conditions

Description	Gd Content in Al-$GdPO_4$ Mix (%)	$k_{eff} + 2\sigma$	H/X Ratio	AENCF (keV)	MCNP Output File Name
Water saturated fill material containing Gd in DOE SNF canister, dry WP outside canister (base case, taken from Table 6-3)	0.1	0.8659	51.9	106.5	cod1+al1_.1+st.o
Similar to base case, but dry tuff replaces water around WP	0.1	0.8660	51.9	107.0	int_tf1.o
Similar to base case, but WP contains dry prebreach clay	0.1	0.8645	51.9	107.0	cod1_prc.o
Similar to previous case, but WP is reflected by dry tuff and DOE SNF canister is at bottom of WP	0.1	0.8660	51.9	106.0	cod1_prc_t1.o
Similar to previous case, but DOE SNF canister more centrally positioned in WP	0.1	0.8677	51.9	105.8	cod1_prc_t2.o
Reflective boundary condition for DOE SNF canister	0.1	0.9009	51.9	104.1	cod1_r1.o

It can be noted that the actual contents of the WP acts more as an absorber for neutrons than a reflector. The conditions outside the WP have a negligible effect on the k_{eff} of this configuration.

Results for the intact assembly but with the other contents of the DOE SNF canister degraded are given in Table 6-6. These cases start with case "f.6+d_d+1%_t.o" in Table 6-4, which has the highest k_{eff} for the most likely configuration and replaces the intact contents of the WP with prebreach clay. The remaining spaces in the WP are filled with water and the WP is reflected with full density water (see Figure 5-7). A case with a reflective boundary condition on the outside surface of the DOE SNF canister is also listed.

Table 6-6. Results for Fuel Assembly in DOE SNF Canister with Degraded Contents in the WP

Description	$k_{eff} + 2\sigma$	H/X Ratio	AENCF (keV)	MCNP Output File Name
Assembly surrounded by goethite, diaspore (5%) and water (38%) and covered by dry diaspore (base case, taken from Table 6-4)	0.8935	51.9	102.5	f.6+d_d+1%_t.o
The WP contains dry prebreach clay and the DOE SNF canister is centered in the clay	0.8950	51.9	103.8	f+d_prc.o
The WP contains dry prebreach clay and the DOE SNF canister is at the bottom of the WP	0.8804	51.9	104.7	f+d_prcl.o
Reflective boundary condition on the surface of the DOE SNF canister	0.9996	51.9	96.6	f+d_r1.o

Again, the actual WP contents acts more as an absorber and less as a reflector, as can be seen by comparing the last case in the table with the previous cases. Also, the WP is more reactive when the DOE SNF canister is centered in the prebreach clay than at the bottom of the clay.

6.1.5 Intact Assembly with Fully Degraded DOE SNF Canister and Contents of the WP

Results are presented in Table 6-7 for the intact assembly with degraded DOE SNF canister and degraded contents of the WP as described in Section 5.2.1.5. Cases are presented in Table 6-7 with different layers of goethite, diaspore and prebreach clay and with these materials mixed together to form a single layer. Since there is no known mechanism for the complete segregation of the different materials in layers, these cases are extreme and thus the corresponding configurations are unlikely. Water fills the voids between fuel pins inside the assembly. This is a very conservative assumption (given the presence of the clay that surrounds the assembly, and since some fill material would initially be present inside the assembly), and it is investigated only for completeness. The initial gadolinium content of the Al-$GdPO_4$ mixture is 1 wt.%. Vacant spaces in the WP are filled with water, and full density water reflects the WP unless stated otherwise. Cases with a reflective boundary condition on the outside surface of the WP are also investigated.

Table 6-7. Results for Intact Assembly (water between fuel pins) with Degraded DOE SNF Canister and Degraded Contents of the WP

Description	$k_{eff} + 2\sigma$	H/X Ratio	AENCF (keV)	MCNP Output File Name
Assembly sets on dry layer of goethite and diaspore which is covered by prebreach clay	0.9614	51.9	97.5	s3a.o
Assembly sets on bottom of WP covered by a dry layer of goethite and diaspore and a dry layer of prebreach clay	0.9122	51.9	102.5	s3a1.o
Similar to previous case, but goethite and diaspore layer is mixed with 20% water by volume	0.8921	51.9	104.5	s3a1+w.2.o
Assembly sets just below top layer of dry goethite and diaspore with a bottom layer of dry prebreach clay	0.9594	51.9	97.8	s3b.o
Similar to previous case, but assembly moved 1/4 of the distance down from the top to the bottom of the clay layer	0.9957	51.9	93.3	s3bm-.o
Similar to previous case, but assembly moved 1/2 of the distance down from the top to the bottom of the clay layer	0.9940	51.9	93.3	s3bm.o
Similar to previous case, but assembly moved 3/4 of the distance down from the top to the bottom of the clay layer	0.9941	51.9	93.4	s3bm+.o
Similar to previous case, but assembly sets at bottom of WP	0.9627	51.9	97.5	s3b1.o
Assembly in center of layer of prebreach clay mixed with 20% water covered with layer of dry diaspore and goethite	0.9426	51.9	97.2	s3b1+w.2.o
Assembly in center of WP full of prebreach clay mixed with 30.8% water; diaspore and goethite are neglected	0.9273	51.9	97.6	s3b1+w.308.o
Comment: Next cases investigate the effect of WP boundary conditions				
Similar to case s3b1.o, but WP is surrounded with 130 cm of dry tuff	0.9911	51.9	94.2	s3b1_t.o
Similar to previous case, but WP is surrounded with 130 cm of half saturated tuff	0.9831	51.9	95.8	s3b1_th.o
Similar to previous case, but WP is surrounded with 130 cm of saturated tuff	0.9810	51.9	95.9	s3b1_tw.o
Similar to case s3b1.o, but WP is surrounded with 230 cm of dry tuff	0.9911	51.9	94.2	s3b1_ta.o
Similar to case s3b1.o, but WP is surrounded with 100 cm of dry tuff	0.9919	51.9	95.3	s3b1_taa.o
Similar to case s3b.o, but WP has reflective boundary condition	0.9594	51.9	97.8	s3b_r.o
Similar to case s3b1.o, but WP has reflective boundary condition	1.0535	51.9	90.0	s3b1_r.o
Similar to case s3bm-.o, but WP has reflective boundary condition	0.9957	51.9	93.3	s3bm-_r.o

As expected, due to the very conservative assumption used the k_{eff} values are very high. A more realistic set of cases that assume that a mixture of prebreach clay, goethite and/or diaspore is present in the assembly flow channels is given in Table 6-8. Water fills the gaps inside the fuel pins and the fuel is fully saturated. These results are also for 1 wt.% Gd in the Al-$GdPO_4$ mixture. For cases where the degradation products do not completely fill the WP, water fills the remaining volume. The thicknesses of the layers are calculated based on the volumes of the layers and their positions in the waste package. These cases are represented in Figure 5-8.

Table 6-8. Results for Intact Assembly (degradation products between fuel pins) with Degraded DOE SNF Canister and Degraded Contents of the WP

Description	$k_{eff} + 2\sigma$	H/X Ratio	AENCF (keV)	MCNP Output File Name
Assembly sets on bottom of WP and is filled and covered by a dry layer of prebreach clay below a dry layer of goethite and diaspore	0.4801	9.1	243.0	s3b1-w.o
Assembly sets on bottom of WP and is filled and covered by a prebreach clay with a water volume content of 20% below a dry layer of goethite and diaspore	0.5968	17.7	179.8	s3b1-w+w.2.o
Assembly sets on bottom of WP and is filled and covered by a prebreach clay with a water volume content of 31.2%; goethite and diaspore are neglected.	0.6495	22.5	160.7	s3b1-w+w.312.o
Assembly sets on bottom of WP, is covered by a prebreach clay with a water volume content of 31.2% and contains clay with a water volume content of 60%; goethite and diaspore are neglected	0.7925	34.8	122.9	s3b1fcw.6.o
Similar to previous case, but water volume content of prebreach clay in assembly is 80%	0.8645	43.4	107.4	s3b1fcw.8.o
Similar to previous case, but water volume content of prebreach clay in assembly is 90%	0.8977	47.6	102.8	s3b1fcw.9.o
Similar to previous case, but water volume content of prebreach clay in assembly is 95%	0.9155	49.8	100.0	s3b1fcw.95.o
Assembly sets on bottom of WP and is filled and covered by a dry mixture of prebreach clay, goethite and diaspore [0.0310][a]	0.5180	10.0	223.2	s3cw0.o
Assembly sets on bottom of WP and is covered by a dry mixture of prebreach clay, goethite and diaspore; this mixture with a water volume content of 50% fills the assembly [0.0150][a]	0.7924	31.0	130.3	s3cw.5.o
Similar to previous case, but water volume content of mixture filling assembly is 80% [0.0061][a]	0.9063	43.5	106.9	s3cw.8.o
Assembly sets on bottom of WP and is covered by dry prebreach clay below a dry layer of goethite and diaspore; the assembly is filled with water mixed with a 3% volume content of diaspore [0.0329][a]	0.9487	51.2	97.9	s3b1dcd.03.o
Similar to previous case, but diaspore volume content is 5% in the assembly [0.0548][a]	0.9256	50.8	101.1	s3b1dcd.05.o
Similar to previous case, but diaspore volume content is 10% in the assembly [0.110][a]	0.8808	49.6	107.4	s3b1dcd.1.o
Assembly sets on bottom of WP and is covered by dry prebreach clay below a dry layer of goethite and diaspore. The assembly is filled with water mixed with a 0.2 volume fraction of goethite.	0.9556	46.7	99.2	s3b1dcg.2.o
Similar to previous case, but goethite volume fraction is 0.3 in the assembly	0.9359	44.1	101.9	s3b1dcg.3.o
Similar to previous case, but goethite volume fraction is 0.4 in the assembly	0.9116	41.5	106.6	s3b1dcg.4.o
Similar to previous case, but goethite volume fraction is 0.5 in the assembly	0.8905	38.9	109.2	s3b1dcg.5.o
Assembly sets on bottom of WP and is covered by dry prebreach clay below a dry layer of goethite and diaspore; the assembly is filled with water mixed with a 0.4 volume fraction of prebreach clay	0.8570	34.8	117.9	s3b1dcw.6.o
Similar to previous case, but prebreach clay vol. fraction is 0.3 in the assembly	0.8947	39.1	109.8	s3b1dcw.7.o
Similar to previous case, but prebreach clay vol. fraction is 0.2 in the assembly	0.9314	43.4	103.9	s3b1dcw.8.o
Similar to previous case, but prebreach clay vol. fraction is 0.1 in the assembly	0.9627	47.6	98.5	s3b1dcw.9.o
Similar to case s3b1dcw.7 but WP is surrounded by dry tuff	0.8933	39.1	110.1	s3b1dcw.7_t.o
Similar to case s3cw.8 but WP is surrounded by dry tuff [0.0061][a]	0.9063	43.5	106.9	s3cw.8_t.o

NOTE: [a] The Gd content in the layer with fuel in units of kg.

These results show that a likely configuration comprised of a mixture of clay and water distributed inside and outside the assembly is less reactive than a configuration with the assembly reflected by a dry layer of prebreach clay. A very small amount of neutron absorber distributed inside the assembly is very effective in reducing k_{eff} of the system. The boundary condition outside WP has a negligible effect for this class of configurations.

Similar results, but with post-breach clay (see composition in Table 5-10) surrounding the assembly and filling the flow channels between the fuel pins inside the assembly, are given in Table 6-9. These results are also for 1 wt.% Gd in the filler material. For cases where the clay does not completely fill the WP, water fills the remaining volume.

Table 6-9. Results for Intact Assembly Surrounded and Filled by Post-Breach Clay

Description	$k_{eff} + 2\sigma$	H/X Ratio	AENCF (keV)	MCNP Output File Name
Top of assembly positioned just at the top of dry layer of post-breach clay [0.0376][a]	0.4997	9.9	224.3	s3psba.o
Similar to previous case, but assembly positioned at a distance about equal to 1/4 the thickness of the clay layer below top of clay [0.0376][a]	0.5144	9.9	224.4	s3psbb.o
Similar to previous case, but assembly positioned at a distance about equal to 1/2 the thickness of the clay layer below top of clay [0.0376][a]	0.5164	9.9	223.2	s3psbc.o
Similar to previous case, but assembly positioned at a distance about equal to 3/4 the thickness of the clay layer below top of clay [0.0376][a]	0.5158	9.9	224.4	s3psbd.o
Similar to previous case, but assembly at bottom of WP [0.0376][a]	0.4811	9.9	241.3	s3psbe.o
Assembly positioned near center of WP, surrounded and filled with post-breach clay containing a water volume content of 10% [0.0338][a]	0.5528	14.1	200.5	s3psbc+w.1.o
Similar to previous case, but water volume content is 20% [0.0301][a]	0.5946	18.3	180.3	s3psbc+w.2.o
Similar to previous case, but water volume content is 25%; WP is completely filled by wet clay mixture [0.0282][a]	0.6117	20.4	172.9	s3psbc+w.25.o
Similar to previous case, but assembly filled with water containing 10% post-breach clay by volume [0.0282][a]	0.8782	47.7	106.3	s3psbcstb.o
Similar to previous case, but assembly filled with water containing 5% post-breach clay by volume [0.0282][a]	0.8954	49.8	102.7	s3psbcsta.o
Similar to previous case, but uses the alternate post-breach clay [0.0282][a]	0.8930	49.8	104.4	s3psbcstal.o

NOTE: [a] The Gd content in the layer with fuel in units of kg.

The results show that the presence of Gd distributed in very small concentrations in the post-breach clay (see Table 5-10) is very effective in reducing the k_{eff} of the system. The values of k_{eff} are very low even for the most conservative configurations.

6.2 RESULTS WITH DEGRADED FUEL ASSEMBLY

6.2.1 Partially Degraded Fuel Assembly with Degraded Pin Clips/Spacers in DOE SNF Canister

These cases are described in Section 5.2.2.1 and are shown in Figure 5-9. Values of k_{eff} for the case of degraded fuel pin clips/spacers in the assembly are shown in Table 6-10. In all cases the

pitch, or center-to-center spacing between fuel pins, is uniform within the assembly. The pitch in Table 6-10 is expressed as a fraction of the difference between the original fuel pin pitch and the minimum pitch. This fraction is referred to in the table as the "pitch fraction" and is simply $(p - p_{min})/(p_{org} - p_{min})$ where p is the pitch, p_{org} is the original pitch of the intact assembly, 0.9398 cm, and p_{min} is the minimum pitch which occurs when the pins are touching and is simply the pin diameter, 0.778002 cm. The fuel pins are essentially touching for the smallest value of the pitch fraction listed in the table. The aluminum shot contains no gadolinium unless otherwise noted. These cases start with case "cod1+al1+st.o" from Table 6-3. The fuel pellets are saturated with water, and the rest of the WP and DOE SNF canister are treated as being intact. The last three cases in this table investigate different boundary conditions for the DOE SNF canister. The first and second of these cases use a reflective boundary condition while the last case positions the DOE SNF canister near the center of the WP surrounded by dry prebreach clay with water filling the remainder of the WP.

Table 6-10. Results for Degraded Fuel Pin Clips/Spacers in Intact DOE SNF Canister

Pitch Fraction	$k_{eff} + 2\sigma$	H/X Ratio	AENCF (keV)	MCNP Output File Name
0	0.6445	13.6	184.4	ptch_.0.o
0.25	0.7232	22.5	151.6	ptch_.25.o
0.5	0.7936	31.9	128.7	ptch_.5.o
0.9	0.8910	47.8	104.5	ptch_.9.o
0.95	0.9025	49.8	102.0	ptch_.95.o
0.978	0.9095	51.9	100.2	ptch_1-.o
[a]0.978	0.9511	51.9	96.4	rf1.o
[a,b]0.978	0.8942	51.9	105.4	rf1_.1.o
[c]0.978	0.9057	51.9	100.1	prc1.o

NOTES: [a] DOE SNF canister has a reflective boundary condition.
[b] This case has a 0.1% gadolinium content in the aluminum shot.
[c] The DOE SNF canister is surrounded by dry prebreach clay.

The results demonstrate that the collapsing of the assembly reduces k_{eff}. Also, the presence of the neutron absorber around the assembly is an effective mean of reducing k_{eff}. The actual WP contents act more as an absorber and less as a reflector, as it can be seen by comparing the last three cases of the table.

6.2.2 Partially Degraded Fuel Assembly with Axially Separated Fuel Pellets in DOE SNF Canister

Results are given in Table 6-11 for fuel pellets that have become axially separated in the fuel pins as described in Section 5.2.2.2. These cases are based on case "cod1+al1+st.o" from Table 6-3. The separation between fuel pellets is uniform for all fuel pins in the assembly and the pellets are assumed to be surrounded by cladding that makes the fuel pin fictitiously long. The space between the pellet is filled with water. The fuel pins maintain the original pitch of the intact assembly. The axial separation between individual fuel pellets is listed in the table. For the first

case listed in the table this spacing is listed as zero though it is actually negligibly larger than zero (0.0004 cm). The initial gadolinium content in the Al-$GdPO_4$ mixture is also listed in the table. Cases are presented where the DOE SNF canister has a reflective boundary condition and where the DOE SNF canister is positioned near the center of the WP surrounded by dry prebreach clay.

Table 6-11. Results for Fuel Pellets Axially Displaced in the Fuel Pin

Axial Separation (cm)	Gadolinium Content in Al-$GdPO_4$ Mix (%)	$k_{eff} + 2\sigma$	H/X Ratio	AENCF (keV)	MCNP Output File Name
0	0	0.9123	51.9	98.7	lg0.o
0.2	0	0.9390	64.9	84.3	lg_.1.o
0.4	0	0.9566	77.9	73.8	lg_.2.o
0.6	0	0.9645	90.9	66.0	lg_.3.o
0.8	0	0.9669	103.9	60.8	lg_.4.o
1.0	0	0.9693	116.9	56.0	lg_.5.o
1.2	0	0.9671	129.9	52.7	lg_.6.o
0	1	0.8424	51.9	110.7	lg0_g1.o
0.2	1	0.8712	64.9	92.9	lg_.1_g1.o
0.4	1	0.8878	77.9	80.8	lg_.2_g1.o
0.6	1	0.8963	90.9	73.0	lg_.3_g1.o
0.8	1	0.9019	103.9	67.5	lg_.4_g1.o
1.0	1	0.9040	116.9	62.1	lg_.5_g1a.o
1.2	1	0.9018	129.9	58.5	lg_.6_g1.o
0.8	0.1	0.9289	103.9	64.0	lg_.4_g.1.o
[a]0.8	0.1	0.9260	103.9	64.5	lg_.4_g.1a.o
0.8	0.5	0.9096	103.9	65.8	lg_.4_g.5.o
0.8	0.75	0.9041	103.9	67.0	lg_.4_g.75.o
[b]0.8	1	0.9298	103.9	66.1	rf_.4.o
[c]0.8	1	0.9045	103.9	66.4	prc_.4.o

NOTES: [a] Water at ends of fuel pins is replaced by aluminum fill mixture.
[b] DOE SNF canister has a reflective boundary condition.
[c] The DOE SNF canister is surrounded by dry prebreach clay.

These cases demonstrate the need for the use of Al-$GdPO_4$ fill mixture and the margin in the gadolinium content.

6.2.3 Partially Degraded Fuel Assembly with Degraded Assembly Duct in DOE SNF Canister

Results are given in Table 6-12 for loose pins settled in the basket assembly due to the degradation of the assembly ducts and fuel pin clips/spacers as described in Section 5.2.2.3 and shown in Figure 5-10. For the first three cases in the table the assembly duct is neglected and the pins (fictitiously) maintain their position as if in an intact assembly. Water fills the void spaces inside the basket assembly while the aluminum fill mixture with varying amounts of gadolinium fills the voids outside the basket assembly. For the next seven cases the pins fill the basket while

maintaining a triangular lattice with the same pitch as the intact assembly. Since the different types of pins can be arranged in many different configurations that, practically speaking, are near infinite in number, cases are presented where all fuel pins are replaced by each of the four different types of pins. The pins are touching in the following six cases. Additional cases with pins in a triangular array with the same pitch as the original pitch and with a smaller pitch are presented. These cases all have aluminum fill mixture outside the assembly basket and the void spaces inside the basket contain water, aluminum fill mixture and/or diaspore. The pins in these cases are surrounded by these or mixtures of these materials. The pellets in the fuel pins are saturated with water for all cases in the table. The pitch fraction, defined in Section 6.2.1, is also used in this table. The gadolinium content in the Al-$GdPO_4$ mixture is also given in the table. The assembly, for the first three cases, is the same as in case "cod1+al1+st.o" from Table 6-3.

Table 6-12. Results for Loose Fuel Pins in the Basket Assembly

Description	Pitch Fraction	Gd Content in Al-$GdPO_4$ mix (%)	$k_{eff} + 2\sigma$	H/X Ratio	AENCF (keV)	MCNP Output File Name
Assembly duct is neglected, pins maintain intact configuration, water inside basket and fill mixture outside basket	1.0	0	0.9168	51.9	96.3	noshrd.o
Similar to previous case, but Gd added	1.0	0.1	0.9079	51.9	97.6	noshrd_.1.o
Similar to previous case, but with more Gd	1.0	1	0.9039	51.9	98.4	noshrd_1.o
Water inside basket, pins fill basket, Al fill mixture outside basket	1.0	0	0.8979	51.9	99.6	hx_0.o
Similar to previous case, but Gd added	1.0	0.1	0.8830	51.9	101.1	hx_0_.1.o
Simlar to previous case, but uses type 5 fuel pins	1.0	0.1	0.9135	51.9	101.0	hx_0_.1-1.o
Similar to previous case, but pin array is slightly repositioned	1.0	0.1	0.9112	51.9	101.9	hx_0_.1-1a.o
Water inside basket, Al fill mixture outside basket and type 4[a] fuel pins	1.0	0.1	0.8713	62.8	97.3	hx_0_.1-2.o
Similar to previous case, but uses type 3[a] fuel pins	1.0	0.1	0.8657	62.8	98.4	hx_0_.1-3.o
Similar to previous case, but uses type 1[a] fuel pins	1.0	0.1	0.8566	62.8	98.6	hx_0_.1-4.o
Assembly pins touching, water inside basket and Al fill mixture outside basket	0	0.1	0.5721	13.6	213.7	hx_min_.1.o
Similar to previous case, but uses type 5[a] fuel pins	0	0	0.6263	13.6	199.7	hx_min-1.o
Similar to previous case, but Gd added	0	0.1	0.5991	13.6	208.7	hx_min_.1-1.o
Similar to previous case, but uses type 4[a] fuel pins	0	0.1	0.5682	16.6	201.7	hx_min_.1-2.o
Similar to previous case, but uses type 3[a] fuel pins	0	0.1	0.5638	16.6	202.4	hx_min_.1-3.o
Similar to previous case, but uses type 1[a] fuel pins	0	0.1	0.5555	16.6	205.4	hx_min_.1-4.o
Comment: The following cases consider an Al-$GdPO_4$ mixture layer inside the basket						
Pins surrounded by water with a layer of Al fill mixture above, Al fill mixture outside basket and type 5[a] pins	1.0	0.1	0.6313	51.9	167.2	hx_0_.1-1a+fa.o
Pins surrounded by Al fill mixture with a layer of water above, Al fill mixture outside basket and type 5[a] pins	1.0	0.1	0.6232	27.3	168.8	hx_0_.1-1a+fb.o
Pins surrounded by diaspore mixed with 12% water with a water layer above, Al fill mixture outside basket and type 5[a] pins	1.0	0.1	0.7191	31.9	137.9	hx_0_.1-1a+d.12.o
Pins surrounded by diaspore mixed with 20% water with a water layer above, Al fill mixture outside basket and type 5[a] pins	1.0	0.1	0.7206	33.8	138.2	hx_0_.1-1a+d.2.o

Description	Pitch Fraction	Gd Content in Al-$GdPO_4$ mix (%)	$k_{eff} + 2\sigma$	H/X Ratio	AENCF (keV)	MCNP Output File Name
Pins surrounded by diaspore mixed with 40% water with a water layer above, Al fill mixture outside basket and type 5[a] pins	1.0	0.1	0.7565	38.3	130.8	hx_0_.1-1a+d.4.o
Diaspore mixed with 62.5% water fills basket, Al fill mixture outside basket and type 5[a] pins	1.0	0.1	0.8025	43.4	120.2	hx_0_.1-1a+d.625.o
Comment: The following cases consider only water inside the basket						
Water inside basket, Al fill mixture outside basket and type 5[a] pins	0.5	0.1	0.7748	31.9	136.8	hx_f.5_.1-1.o
Water inside basket, Al fill mixture outside basket and type 5[a] pins	0.8	0.1	0.8651	43.7	112.8	hx_f.8_.1-1.o
Similar to case hx_0_.1-1.o, but with reflective boundary condition on DOE SNF canister	1.0	0.1	0.9702	51.9	96.8	hx0-1_r1.o
Similar to case hx_0_.1-1.o, but DOE SNF canister is centered in WP and surrounded by dry prebreach clay	1.0	0.1	0.9126	51.9	100.2	hx0-1_prc.o

NOTE: [a] See Figure 5-2 for description of fuel types.

These configurations do not require Al-$GdPO_4$ mixture inside the basket, and therefore, are bound by more extreme degraded cases.

6.2.4 Partially Degraded Fuel Assembly with Degraded Assembly Duct and Basket Plates in DOE SNF Canister

Results are given in Table 6-13 for loose pins settled in the DOE SNF canister due to the degradation of the fuel pin clips/spacers, assembly ducts, and basket assembly as described in Section 5.2.2.4 and shown in Figure 5.11. All fuel pins from the assembly are modeled as being the most reactive type found in Section 6.2.3 (type 5 fuel pins, see Figure 5-2). The placement of pins in the DOE SNF canister is irregular with some pins being in a somewhat triangular array, some approximately in a square array and others being somewhere between a triangular and square array. Two different configurations of fuel pins are investigated in the first several cases in this table (see Figure 6-2). For the first two cases in the table, all voids in the DOE SNF canister are filled with water thus neglecting any degradation products. Additional cases that investigate different pitches and layers of degradation products are presented. Any voids in the DOE SNF canister not filled by degradation products are filled with water. The gadolinium content in the Al-$GdPO_4$ mixture is given in the table. The values of H/X listed in the table are an average of the values for square and triangular lattices. Some of the configurations investigated are very unlikely (unphysical) with respect to the positioning of the mixture layers. They were analyzed in order to evaluate the full spectrum of configurations that are postulated for this class. Mixing of the layers containing degradation products is expected, rather than separation of the layers. The contents of the WP are intact and empty spaces in the WP are treated as voids. The WP is reflected by full density water. The parameters varied in the analysis are clearly identified in the following table.

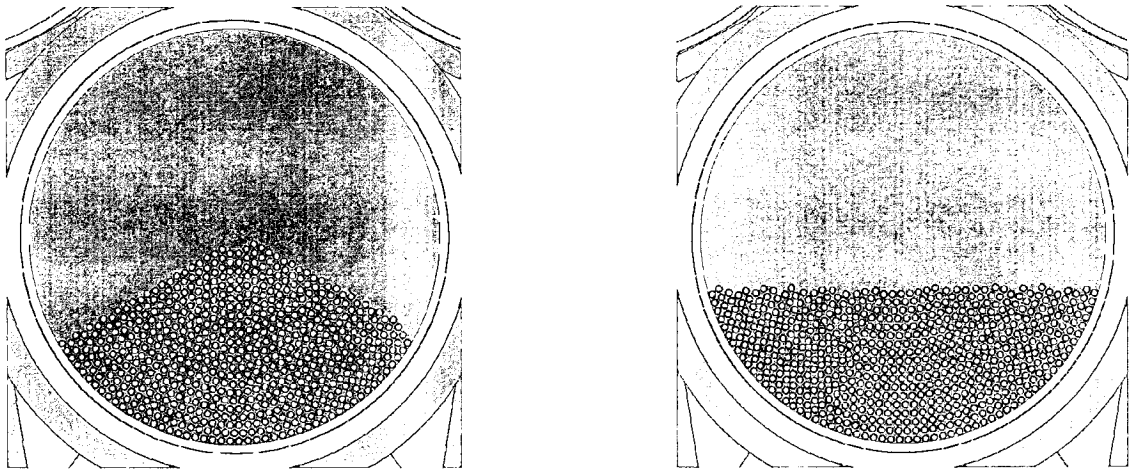

Configuration "a" Configuration "b"

Figure 6-2. The Two Types of Fuel Pins Configurations Investigated in Table 6-13

Table 6-13. Results for Loose Fuel Pins in the DOE SNF Canister with Intact WP

Description	Pitch (cm)	Gd Content in Al-$GdPO_4$ mix (%)	$k_{eff} + 2\sigma$	H/X Ratio	AENCF (keV)	MCNP Output File Name
Configuration "a," water fills DOE SNF canister	0.9398	0	0.9958	61.3	85.4	fp1_wa.o
Configuration "b," water fills DOE SNF canister	0.9398	0	0.9718	61.3	85.1	fp1_wb.o
Configuration "b," dry goethite below dry diaspore	0.9398	0.1	0.6909	29.9	137.1	fp1+g_d1_.1.o
Configuration "b," dry goethite below dry diaspore	0.9398	1	0.6704	29.9	142.7	fp1+g_d1_1.o
Configuration "b," goethite and 20% water (by volume) below dry diaspore	0.9398	1	0.7524	36.2	123.6	fp1+g+w.2_d1_1.o
Configuration "b," goethite and 40% water (by volume) below dry diaspore	0.9398	1	0.8205	42.5	109.2	fp1+g+w.4_d1_1.o
Configuration "b," goethite and 60% water (by volume) below dry diaspore	0.9398	1	0.8705	48.8	99.7	fp1+g+w.6_d1_1.o
Similar to previous case but, configuration "a"	0.9398	1	0.8951	48.8	99.4	fp1+g+w.6a_d1_1.o
Similar to previous case but, configuration "a"	0.9398	0.1	0.8956	48.8	99.3	fp1+g+w.6a_d1_.1.o
Comment: Next cases investigate the effect of pitch variation on k_{eff}						
Goethite and 60% water (by volume) below dry diaspore; pins touching	0.7782	1	0.6473	16.9	188.7	pf0+g+w.6_d1_1.o
Goethite and 60% water (by volume) below dry diaspore	0.85895	1	0.7927	32.0	130.6	pf.5+g+w.6_d1_1.o
Goethite and 60% water (by volume) below dry diaspore	1	1	0.9577	62.2	84.2	p1+g+w.6_d1_1.o
Goethite and 60% water (by volume) below dry diaspore	1.25	1	1.0529	126.8	55.1	p1.25+g+w.6_d1_1.o
Similar to previous case, but level of goethite mixture is adjusted	1.25	1	1.0510	126.8	54.8	p1.25a+g+w.6_d1_1.o
Similar to previous case, but different pin configuration	1.25	1	1.0391	126.8	55.2	p1.25b+g+w.6_d1_1.o

Description	Pitch (cm)	Gd Content in Al-$GdPO_4$ mix (%)	$k_{eff} + 2\sigma$	H/X Ratio	AENCF (keV)	MCNP Output File Name
Goethite and 60% water (by volume) below dry diaspore	1.5	1	0.9497	205.7	46.5	p1.5+g+w.6_d1_1.o
Goethite and 60% water (by volume) below dry diaspore	1.62	1	0.8991	248.7	44.4	p1.62+g+w.6_d1_1.o
Comment: Next cases consider the pins surrounded by a mixture of goethite, diaspore and Gd						
Goethite, 60% water and 1% diaspore (both by volume) below dry diaspore [0.0504][a]	1	1	0.9283	62.0	86.7	p1+g+w.6+d1%_d1.o
Goethite, 60% water and 2% diaspore (both by volume) below dry diaspore [0.102][a]	1	1	0.9026	61.8	89.5	p1+g+w.6+d2%_d1.o
Goethite, 60% water and 2% diaspore (both by volume) below dry diaspore [0.102][a]	1.25	1	0.9428	125.9	60.8	p1.25a+g+w.6+d2%_d1.o
Goethite, 60% water and 3.5% diaspore (both by volume) below dry diaspore [0.181][a]	1.25	1	0.8849	125.3	65.7	p1.25a+g+w.6+d3.5_d1.o
Goethite, 60% water and 5% diaspore (both by volume) below dry diaspore [0.263][a]	1.25	1	0.8413	124.7	68.1	p1.25a+g+w.6+d5%_d1.o
Goethite, 60% water and 1% diaspore (both by volume) below dry diaspore [0.0504][a]	1.5	1	0.8633	205.0	51.2	p1.5+g+w.6+d1%_d1.o
Goethite, 60% water and 2% diaspore (both by volume) below dry diaspore [0.102][a]	1.5	1	0.7968	204.3	55.7	p1.5+g+w.6+d2%_d1.o
Similar to case pf0+g+w.6_d1_1.o, but reflective boundary condition on DOE SNF canister	0.7782	1	0.8806	16.9	159.7	refl0.o

NOTE: [a] The Gd content in the layer with fuel in units of kg.

The results show that the dispersion of a relatively small amount of Gd in the mixture that surrounds the fuel pins is very effective in reducing the k_{eff} of the system. Since the expected values for the mixing fractions of diaspore (containing Gd) with goethite are much higher than the investigated values in the table, there is a large margin to prevent criticality.

Results for the contents of the WP having degraded to prebreach clay are given in Table 6-14. The DOE SNF canister degraded configuration from case p1.25a+g+w.6+d3.5_d1.o in Table 6-13 is used to determine the effects of positioning the DOE SNF canister at different heights in the clay and with differing volume fractions of water in the clay. For these cases the pitch of the fuel pins in the DOE SNF canister is 1.25 cm and the pins are surrounded by goethite mixed with 60% water and 3.5% diaspore (both by volume). Above this layer is a dry layer of the remaining diaspore with the remainder of the DOE SNF canister filled by water. The initial gadolinium content in the Al-$GdPO_4$ mixture is 1 wt.% for all cases.

Table 6-14. Results for Loose Fuel Pins in the DOE SNF Canister with Degraded Contents in the WP

Description	$k_{eff} + 2\sigma$	H/X Ratio	AENCF (keV)	MCNP Output File Name
Goethite, 60% water and 3.5% diaspore (both by volume) below dry diaspore (base case)	0.8849	125.3	65.7	p1.25a+g+w.6+d3.5_d1.o
Similar to base case, but reflective boundary condition on DOE SNF canister	1.0668	125.3	60.2	refl1.o

Description	$k_{eff} + 2\sigma$	H/X Ratio	AENCF (keV)	MCNP Output File Name
Similar to base case, but DOE SNF canister rests at bottom of WP covered with dry clay	0.8783	125.3	65.4	dry0.o
DOE SNF canister rests 5 cm above the bottom of WP in layer of dry clay	0.8917	125.3	64.4	dry1.o
DOE SNF canister is positioned 22.3 cm above the bottom of WP in layer of dry clay	0.8982	125.3	63.2	dry2.o
DOE SNF canister is positioned 44.6 cm above the bottom of WP in layer of dry clay	0.8985	125.3	64.0	dry3.o
DOE SNF canister is positioned 66.9 cm above the bottom of WP in layer of dry clay	0.8994	125.3	63.8	dry4.o
The DOE SNF canister top is aligned with the top of the dry clay layer	0.8978	125.3	64.1	dry5.o
The DOE SNF canister center is aligned with the top of the dry clay layer	0.8952	125.3	63.3	dry6.o
The bottom of the DOE SNF canister is aligned with the top of the dry clay layer	0.8644	125.3	65.7	dry7.o
Comment: Next cases investigate the effect of varying water content outside DOE SNF canister				
DOE SNF canister rests at bottom of WP covered by clay with 10% water (by volume)	0.8741	125.3	65.8	wt.9a.o
DOE SNF canister positioned just below the top of the layer of clay mixed with 10% water (by volume)	0.8840	125.3	64.6	wt.9e.o
DOE SNF canister rests at bottom of WP covered by clay with 20% water (by volume)	0.8702	125.3	65.0	wt.8a.o
DOE SNF canister just below the top level of the clay mixed with 20% water (by volume)	0.8746	125.3	65.4	wt.8e.o
DOE SNF canister at bottom of WP filled with saturated clay (28.6% water by volume)	0.8684	125.3	66.4	wt.714a.o
DOE SNF canister positioned 2 cm from bottom of WP filled with saturated clay (28.6% water by volume)	0.8698	125.3	65.5	wt.714a1.o
DOE SNF canister positioned 19 cm from bottom of WP filled with saturated clay (28.6% water by volume)	0.8702	125.3	65.7	wt.714b.o
DOE SNF canister positioned 38 cm from bottom of WP filled with saturated clay (28.6% water by volume)	0.8697	125.3	65.4	wt.714c.o
DOE SNF canister positioned 57.1 cm from bottom of WP filled with saturated clay (28.6% water by volume)	0.8686	125.3	64.9	wt.714d.o
DOE SNF canister centered in WP filled with saturated clay (28.6% water by volume)	0.8692	125.3	66.1	wt.714e.o

A full spectrum of conditions outside the DOE SNF canister has been considered in Table 6-14, including reflective boundary conditions. It can be seen that the degraded contents of the waste package act as more of an absorber of neutrons than as a reflector. Mixing of water with prebreach clay further reduce the k_{eff} of the system.

6.2.5 Partially Degraded Fuel Assembly with Fully Degraded DOE SNF Canister and WP Contents

Results are given in Table 6-15 for loose pins settled in the WP due to the degradation of the fuel pin clips/spacers, assembly duct, basket assembly and DOE SNF canister as described in Section

5.2.2.5 and shown in Figure 5-13. For all configurations the pins are assumed to be in a bundled, compact configuration unless noted otherwise. The initial gadolinium content in the Al-$GdPO_4$ mixture is 1 wt.%. The waste package is filled with a mixture of prebreach clay and degradation products from the DOE SNF canister. Water fills any vacant spaces not occupied by degradation products in the WP.

Table 6-15. Results for Loose Fuel Pins in the WP (surrounded by a mixture of prebreach clay and degradation products of DOE SNF canister)

Description	Pitch (cm)	$k_{eff} + 2\sigma$	H/X Ratio	AENCF (keV)	MCNP Output File Name
Comment: Next cases investigate mixing of dry layers of degradation products					
Pins covered by dry clay below a dry layer of diaspore mixed with goethite	0.7782	0.4549	6.8	314.7	s9p0a.o
Previous case but pins shifted in the axial direction	0.7782	0.4574	6.8	311.4	s9p0b.o
Pins covered by dry clay below a dry layer of diaspore mixed with goethite	1.0	0.5067	11.0	208.7	s9p1.0a.o
Pins covered by dry clay below a dry layer of diaspore mixed with goethite	1.25	0.5616	16.9	142.2	s9p1.25a.o
Pins covered by dry clay below a dry layer of diaspore mixed with goethite	1.5	0.5514	24.1	109.9	s9p1.5a.o
Pins covered by dry clay below a dry layer of diaspore mixed with goethite	2.0	0.5829	42.5	74.7	s9p2.0a.o
Pins covered by dry clay below a dry layer of diaspore mixed with goethite	2.5	0.5552	66.2	59.3	s9p2.5a.o
Pins covered by dry clay below a dry layer of diaspore mixed with goethite	3.0	0.4967	95.1	53.8	s9p3.0a.o
WP completely filled with water	0.7782	0.6833	20.1	170.6	s9p0a_w.o
Pins surrounded with dry layer of clay, goethite and diaspore	1.25	0.5678	20.1	139.6	s1.25a+g+d.o
Comment: Next cases investigate the effect of water addition					
Pins surrounded by clay, goethite, diaspore and 10% (by volume) water	1.25	0.6615	34.3	112.3	s1.25a+g+d+w.1.o
WP completely filled with mixture of clay, goethite, diaspore and 27.6% (by volume) water	1.25	0.7708	59.3	88.5	s1.25a+g+d+w.276.o
Pins covered by clay with 20% water (by volume) below a dry layer of diaspore mixed with goethite	1.25	0.7682	46.0	92.6	s9p1.25a_w.2.o
Comment: Next cases investigate the effect of pin pitch variation					
WP completely filled with clay mixed with 31.3% (by volume) water (goethite and diaspore are neglected)	0.7782	0.5269	11.0	249.0	s9p0a_w.313.o
Similar to previous case, but increased pitch	1.0	0.7275	32.1	126.5	s9p1.0a_w.313.o
Similar to previous case, but increased pitch	1.25	0.8464	62.4	79.6	s9p1.25a_w.313.o
Similar to previous case, but increased pitch	1.5	0.8310	99.3	60.3	s9p1.5a_w.313.o
Similar to previous case, but increased pitch	2.0	0.7845	193.2	44.5	s9p2.0a_w.313.o
Similar to previous case, but increased pitch	2.5	0.6746	314.0	39.3	s9p2.5a_w.313.o
Similar to previous case, but increased pitch	3.0	0.5606	461.6	38.7	s9p3.0a_w.313.o
Comment: Next cases investigate the effect of diaspore+Gd mixing with the layer surrounding the fuel pins					
Goethite and 60% water (by volume) covered by separate layers of dry clay and dry diaspore	1.25	0.9942	126.8	62.2	s9p1.25ag.4+w_c_d.o
Previous case, but pin configuration is more spread out as in Figure 5-13	1.25	0.8468	126.8	57.0	s9flt1.o

Description	Pitch (cm)	$k_{eff} + 2\sigma$	H/X Ratio	AENCF (keV)	MCNP Output File Name
Goethite, 60% water and 2.5% diaspore (both by volume) covered by separate layers of dry clay and dry diaspore [0.330][a]	1.25	0.8824	127.1	70.0	s9g+d+w.6b.o
Similar to previous case, but WP surrounded by dry tuff	1.25	0.9115	127.1	67.2	s9g+d+w.6b_t.o
Goethite, 60% water and 5% diaspore (both by volume) covered by separate layers of dry clay and dry diaspore [0.706][a]	1.25	0.8186	127.3	75.1	s9g+d+w.6a.o
Similar to previous case, but WP surrounded by dry tuff	1.25	0.8394	127.1	73.8	s9g+d+w.6a_t.o

NOTE: [a] The Gd content in the layer with fuel in units of kg.

The results show that the most likely configurations (those where the degradation products have mixed together the most) have lower values of k_{eff} than the cases where the products have formed separate layers. The presence of a small amount of Gd among fuel pins is extremely effective in reducing k_{eff}. The boundary conditions outside the WP have a small effect on k_{eff}. For instance, replacing the water reflector with dry tuff increases $k_{eff} + 2\sigma$ by approximately 3% (from 0.8824 to 0.9115).

Results are given in Table 6-16 for loose pins settled in the WP surrounded by post-breach clay. The pins are arranged in a configuration with a pitch of 1.25 cm. The pins are in a compact configuration. The gadolinium content in the Al-$GdPO_4$ is 1 wt.%. Water fills any vacant spaces not occupied by degradation products in the WP.

Table 6-16. Results for Loose Fuel Pins in the WP with Post-Breach Clay

Description	$k_{eff} + 2\sigma$	H/X Ratio	AENCF (keV)	MCNP Output File Name
Pins covered by dry clay	0.5623	19.6	140.2	psb1.25w0.o
Pins covered by clay mixed with 10% water	0.6540	33.9	114.5	psb1.25w.1.o
Pins covered by clay mixed with 20% water	0.7189	48.2	99.0	psb1.25w.2.o
WP completely filled with clay mixed with 25% water	0.7475	55.2	93.2	psb1.25w.25.o
Similar to previous case, but WP is surrounded by dry tuff	0.7722	55.2	90.5	psb1.25w.25_t.o

6.2.6 Fully Degraded Fuel in Intact DOE SNF Canister

Results are given in Table 6-17 for a completely degraded fuel assembly that has settled in the DOE SNF canister as described in Section 5.2.2.6 (shown in Figure 5-14). The table lists the contents of the bottom, middle and top (if present) layers by volume percent. For cases where these percentages are slightly different for each of the four axial regions, the content values listed in the table are approximate and are simply averaged over the regions while the H/X ratios are length averaged over the four regions. The thoria content from the fuel pins is neglected for all cases unless noted otherwise. Since the thoria content of each of the four axial regions is different, the volume of the remaining fuel is different for each region. Cases are also presented where the volume of each region is modified to give the same fuel height in each region. In these cases the actual amount of fuel that is modeled is greater than what is actually contained in the fuel assembly. These cases are designated by "All fuel levels set equal to highest fuel level".

The contents of the WP are considered intact for all cases except for the last few cases in the table as noted. The initial gadolinium content in the Al-$GdPO_4$ mixture is 1 wt.%. Water fills any vacant spaces not occupied by degradation products in the DOE SNF canister.

Table 6-17. Results for Completely Degraded Fuel Assembly in the DOE SNF Canister

Description	Bottom Layer Contents by Volume (%)	Next Layer Contents by Volume (%)	Next Layer Contents by Volume (%)	$k_{eff} + 2\sigma$	H/X Ratio	AENCF (keV)	MCNP Output File Name
Comment: The following cases investigate the effect of varying the water content in bottom layer							
Dry degraded fuel	Fuel 100	Goethite 100	Diaspore 100	0.4748	0	813.6	f_g_d1.o
Similar to previous case, but water mixed with degraded fuel	Fuel 50.0 Water 50.0	Goethite 100	Diaspore 100	0.5499	2.8	481.3	f50%_g_d1.o
Similar to previous case, but more water mixed with degraded fuel	Fuel 25.0 Water 75.0	Goethite 100	Diaspore 100	0.6898	8.3	257.3	f25%_g_d1.o
Similar to previous case, but more water mixed with degraded fuel	Fuel 12.5 Water 87.5	Goethite 100	Diaspore 100	0.8753	19.5	135.3	f12.5%_g_d1.o
Similar to previous case, but all fuel levels set equal to highest fuel level (models more fuel than actually present)	Fuel 12.5 Water 87.5	Goethite 100	Diaspore 100	0.8916	19.5	134.4	f12.5%_g_d1a.o
Comment: The following cases investigate the effect of water addition in the goethite layer							
Similar to case f12.5%_g_d1.o but water added to goethite layer	Fuel 12.5 Water 87.5	Goethite 80 Water 20.0	Diaspore 100	0.8681	19.5	133.0	f12.5%_g+w20%_d1.o
Similar to previous case, but more water mixed with goethite layer	Fuel 12.5 Water 87.5	Goethite 60 Water 40.0	Diaspore 100	0.8614	19.5	133.8	f12.5%_g+w40%_d1.o
Similar to previous case, but more water mixed with goethite layer	Fuel 12.5 Water 87.5	Goethite 40 Water 60.0	Diaspore 100	0.8625	19.5	131.5	f12.5%_g+w60%_d1.o
Comment: The following cases investigate the effect of mixing degraded fuel and goethite in bottom layer							
Similar to case f12.5%_g_d1.o, but goethite added to fuel layer	Fuel 50.0 Goethite 50.0	Goethite 100	Diaspore 100	0.4888	1.2	561.5	f+g50%_g_d1.o
Similar to previous case, but more goethite mixed with fuel layer	Fuel 12.5 Goethite 87.5	Goethite 100	Diaspore 100	0.6346	8.4	211.0	f+g87.5%_g_d1.o
Similar to previous case, but more goethite mixed with fuel layer	Fuel 5.0 Goethite 95.0	Goethite 100	Diaspore 100	0.8021	22.9	98.4	f+g95%_g_d1.o
All goethite is mixed in fuel layer	[a]Fuel 3.0 Goethite 97.0	Diaspore 100	—	0.8357	[b]35.76	79.6	f+g_d1.o
Comment: The following cases investigate the effect of mixing degraded fuel and goethite in bottom layer							
All fuel levels set equal to highest fuel level, but water is added in bottom layer	[a]Fuel and Goethite 95.0 Water 5.0	Diaspore 100	—	0.8720	[b]41.0	72.7	f+g+w5%_d1p.o
Similar to previous case, but more water added in bottom layer	[a]Fuel and Goethite 90.0 Water 10.0	Diaspore 100	—	0.9104	[b]46.0	66.4	f+g+w10%_d1p.o
Similar to previous case, but more water added in bottom layer	[a]Fuel and Goethite 80.0 Water 20.0	Diaspore 100	—	0.9841	[b]58.0	55.1	f+g+w20%_d1.o
Similar to previous case, but all fuel levels set equal to highest fuel level	[a]Fuel and Goethite 80.0 Water 20.0	Diaspore 100	—	0.9856	[b]58.0	55.6	f+g+w20%_d1p.o
Similar to previous case, but water added in diaspore layer	[a]Fuel and Goethite 80.0 Water 20.0	Diaspore 90.0 Water 10.0	—	0.9780	[b]58.0	54.6	f+g+w20%_d1+w10%p.o

Description	Bottom Layer Contents by Volume (%)	Next Layer Contents by Volume (%)	Next Layer Contents by Volume (%)	$k_{eff} + 2\sigma$	H/X Ratio	AENCF (keV)	MCNP Output File Name
Similar to previous case, but more water added in diaspore layer	[a]Fuel and Goethite 80.0 Water 20.0	Diaspore 80.0 Water 20.0	—	0.9742	[b]58.0	55.3	f+g+w20%_d1+w20%p.o
Similar to case f+g+w20%_d1, but more water added in bottom layer	[a]Fuel and Goethite 60.0 Water 40.0	Diaspore 100	—	1.1375	[b]93.8	37.6	f+g+w40%_d1p.o
Similar to previous case, but more water added in bottom layer	[a]Fuel and Goethite 40.0 Water 60.0	Diaspore 100	—	1.2880	[b]165.6	22.9	f+g+w60%_d1p.o
All fuel levels set equal to highest fuel level and DOE SNF canister is full of fuel mixture and diaspore	[a]Fuel and Goethite 27.8 Water 72.2	Diaspore 100	—	1.3706	[b]260.3	15.7	f+g+w72.2%_d1p.o
Comment: The following cases investigate the effect of mixing diaspore + Gd in the bottom layer containing degraded fuel							
Similar to previous case, but diaspore added in bottom layer [0.0393][c]	[a]Fuel and Goethite 27.0 Water 72.0 Diaspore 1.0	Diaspore 100	—	1.2309	[b]261.8	17.4	f+g+w65%+d1%_d1p.o
Similar to previous case, but more diaspore added in bottom layer [0.205][c]	[a]Fuel and Goethite 26.0 Water 69.0 Diaspore 5.0	Diaspore 100	—	0.9231	[b]268.5	23.1	f+g+w65%+d5%_d1p.o
Similar to previous case, but more diaspore added in bottom layer [0.248][c]	[a]Fuel and Goethite 26.0 Water 68.0 Diaspore 6.0	Diaspore 100	—	0.8750	[b]270.2	24.1	f+g+w65%+d6%_d1p.o
Same amount of gadolinium as previous case but neglects diaspore [0.248][c]	[a]Fuel and Goethite 27.5 Water 72.5 Gd < 1.0	Diaspore 100	—	0.8784	[b]260.3	25.0	f+g+w65%+gd6%_d1p.o
All fuel levels set equal to highest fuel level and DOE SNF canister is full of fuel mixture and diaspore [0.293][c]	[a]Fuel and Goethite 26.0 Water 67.0 Diaspore 7.0	Diaspore 100	—	0.8384	[b]272.0	24.2	f+g+w65%+d7%_d1p.o
Same as previous case, but more diaspore added in bottom layer [0.432][c]	[a]Fuel and Goethite 25.0 Water 65.0 Diaspore 10.0	Diaspore 100	—	0.7448	[b]277.6	28.0	f+g+w65%+d10%_d1p.o
Comment: The following cases investigate the effect of reducing water content in bottom layer							
All fuel levels set equal to highest fuel level [0.172][c]	[a]Fuel and Goethite 37.5 Water 56.5 Diaspore 6.0	Diaspore 100	—	0.9620	[b]172.5	29.8	f+g+w60%+d6%_d1p.o
Same as previous case, but less water and more diaspore [0.249][c]	[a]Fuel and Goethite 36.55 Water 55.0 Diaspore 8.45	Diaspore 100	—	0.8894	[b]175.6	31.9	f+g+w60%+d8.45%_d1p.o
Same as previous case, but less water [0.250][c]	[a]Fuel and Goethite 52.3 Water 35.5 Diaspore 12.2	Diaspore 100	—	0.8806	[b]103.9	45.0	f+g+w40%+d12.2%_d1p.o
Same as previous case, but less water [0.250][c]	[a]Fuel and Goethite 67.4 Water 17.0 Diaspore 15.6	Diaspore 100	—	0.8437	[b]68.0	57.9	f+g+w20%+d15.6%_d1p.o
Same as previous case, but less water [0.249][c]	[a]Fuel and Goethite 73.8 Water 9.0 Diaspore 17.2	Diaspore 100	—	0.8218	[b]56.0	65.1	f+g+w10%+d17.2%_d1p.o

Description	Bottom Layer Contents by Volume (%)	Next Layer Contents by Volume (%)	Next Layer Contents by Volume (%)	$k_{eff} + 2\sigma$	H/X Ratio	AENCF (keV)	MCNP Output File Name
Comment: The following cases investigate the effect of various fractions of thoria remaining with the fuel							
10% of thoria remains with fuel and some diaspore neglected	[a]Fuel and Goethite 27.25 Water 71.0 Thoria 1.75	Diaspore 100	—	1.3254	[b]261.7	17.7	f+g+w71%+t10%_d1p.o
50% of thoria remains with fuel and some diaspore neglected	[a]Fuel and Goethite 24.0 Water 67.0 Thoria 9.0	Diaspore 100	—	1.2071	[b]267.2	25.9	f+g+w66%+t50%_d1p.o
All of thoria remains with fuel and some diaspore neglected	[a]Fuel and Goethite 23.0 Water 61.0 Thoria 16.0	Diaspore 100	—	1.0991	[b]274.2	35.4	f+g+w60%+t1_d1p.o
Comment: The following cases investigate the effect of positioning the layer containing fuel above the bottom layer of goethite							
12.5% of goethite is in layer below fuel, rest is mixed in with fuel [0.248][c]	Goethite 100	[a]Fuel and Goethite 24.0 Water 70.0 Diaspore 6.0	Diaspore 100	0.8822	[b]265.8	24.1	gb_f+g+w65%+d6%_d1p.o
25% of goethite is in layer below fuel, rest is mixed in with fuel [0.248][c]	Goethite 100	[a]Fuel and Goethite 21.1 Water 72.5 Diaspore 6.4	Diaspore 100	0.8800	[b]261.3	24.5	ga_f+g+w65%+d6%_d1p.o
37.5% of goethite is in layer below fuel, rest is mixed in with fuel [0.248][c]	Goethite 100	[a]Fuel and Goethite 18.4 Water 75.0 Diaspore 6.6	Diaspore 100	0.8813	[b]256.8	24.9	gc_f+g+w65%+d6%_d1p.o
50% of goethite is in layer below fuel, rest is mixed in with fuel [0.248][c]	Goethite 100	[a]Fuel and Goethite 15.4 Water 77.8 Diaspore 6.8	Diaspore 100	0.8819	[b]252.4	25.1	gd_f+g+w65%+d6%_d1p.o
75% of goethite is in layer below fuel, rest is mixed in with fuel [0.248][c]	Goethite 100	[a]Fuel and Goethite 8.6 Water 84.0 Diaspore 7.4	Diaspore 100	0.8840	[b]243.4	26.5	ge_f+g+w65%+d6%_d1p.o
100% of goethite is in layer below fuel [0.248][c]	Goethite 100	[a]Fuel 1.3 Water 90.7 Diaspore 8.0	Diaspore 100	0.8846	[b]234.5	27.7	gf_f+g+w65%+d6%_d1p.o
Comment: The following cases investigate the effect of various conditions outside DOE SNF canister							
Similar to case f+g+w65%+d6%_d1p.o but reflective boundary condition on DOE SNF canister [0.248][c]	[a]Fuel and Goethite 26.0 Water 68.0 Diaspore 6.0	Diaspore 100	—	1.0102	[b]270.2	22.8	f+g+w+d6%_r1.o
Similar to case f+g+w65%+d6%_d1p.o but DOE SNF canister is nearly centered in dry prebreach clay in WP [0.248][c]	[a]Fuel and Goethite 26.0 Water 68.0 Diaspore 6.0	Diaspore 100	—	0.8861	[b]270.2	23.2	f+g+w+d6%_prc.o
Same as previous case, but uses alternate prebreach clay [0.248][c]	[a]Fuel and Goethite 26.0 Water 68.0 Diaspore 6.0	Diaspore 100	—	0.8847	[b]270.2	23.3	f+g+w+d6%_prca.o

NOTES: [a] Approximate values are averaged from separate axial fuel regions.
[b] The H/X value is length averaged.
[c] The Gd content in the layer with fuel in units of kg.

The results from Table 6-17 cover a large number of variations of the parameters that characterize this class of degraded configurations. It can be noted that the configurations with a

completely separate layer of diaspore (containing Gd) from the fuel (which is a very unlikely arrangement) are very reactive. The presence of a small amount of Gd in the layer containing degraded fuel brings k_{eff} to much lower values. If thoria is not neglected in the fuel composition, it has a beneficial role in further reducing the k_{eff} of the system. The position of the DOE SNF canister in the waste package has a minor effect on k_{eff}, with lower values for a bottom position, which is the most likely. The contents of the waste package outside the DOE SNF canister play a more absorbing role, further reducing the k_{eff} of the system. Finally, it can be noted that these cases bound the results obtained for intact SNF placed in the DOE SNF canister.

6.2.7 Fully Degraded Fuel, DOE SNF Canister and WP Contents

Results are given in Table 6-18 for completely degraded fuel assembly, fill material, basket assembly, DOE SNF canister and WP contents that have settled in the WP as described in Section 5.2.2.7 (shown in Figure 5-15). The table lists the contents of the various layers by volume percent. For cases where these percentages are slightly different for each of the four axial regions, the values listed in the table are for the first axial region which is the lower 42 in. (half) of the fuel as shown in Figure 5-1. The H/X ratios are length averaged over the four regions. The axial loading of goethite, diaspore and degraded fuel is preserved in all cases and the thoria is neglected for most cases. The initial gadolinium content in the Al-$GdPO_4$ mixture is 1 wt.%. The results in Table 6-18 are for prebreach clay. Water fills any vacant spaces not occupied by degradation products in the WP.

Table 6-18. Results for Completely Degraded Components in the WP

Bottom Layer Contents by Volume (%)	Next Layer Contents by Volume (%)	Next Layer Contents by Volume (%)	Top Layer Contents by Volume (%)	$k_{eff} + 2\sigma$	H/X Ratio	AENCF (keV)	MCNP Output File Name
Comment: The following cases investigate the effect of mixing fuel and water in the bottom layer							
Fuel 100	Goethite 100	Clay 100	Diaspore 100	0.4497	0	612.5	f_g_c_d1.o
Fuel 12.5 Water 87.5	Goethite 100	Clay 100	Diaspore 100	0.6970	19.5	132.2	f.125+w_g_c_d1.o
Fuel 5.0 Water 95.0	Goethite 100	Clay 100	Diaspore 100	0.9214	52.8	57.4	f.05+w_g_c_d1.o
[b]Fuel 5.0 Water 95.0	Goethite 100	Clay 100	Diaspore 100	1.0392	52.8	51.4	f.05+w_g_c_d1_t.o
Similar to case f.05+w_g_c_d1, but all fuel regions (in axial direction) at highest level	Goethite 100	Clay 100	Diaspore 100	0.9301	52.8	57.4	f.05+w_g_c_d1a.o
Similar to previous case, but all fuel at the same (average) level (actual amount of fuel is modeled)	Goethite 100	Clay 100	Diaspore 100	0.8607	52.8	58.8	f.05+w_g_c_d1b.o
Goethite 100	Fuel 5.0 Water 95.0	Clay 100	Diaspore 100	0.8044	52.8	49.1	g_f.05+w_c_d1.o
Comment: The following cases investigate the effect of mixing fuel, goethite and water in the bottom layer							
[c]Fuel and Goethite 72.9 Water 27.1	Clay 100	Diaspore 100	—	0.9908	[d]127.8	26.4	f+g+w.271_c_d1.o
Similar to previous case, but all fuel at highest fuel level (models more fuel than actually present)	Clay 100	Diaspore 100	—	1.0050	[d]127.8	26.3	f+g+w.271_c_d1a.o

Bottom Layer Contents by Volume (%)	Next Layer Contents by Volume (%)	Next Layer Contents by Volume (%)	Top Layer Contents by Volume (%)	$k_{eff} + 2\sigma$	H/X Ratio	AENCF (keV)	MCNP Output File Name
Fuel and Goethite 50.0 Water 50.0	Clay 100	Diaspore 100	—	1.1025	[d]250.9	16.6	f+g+w.5_c_d1.o
Fuel and Goethite 40.0 Water 60.0	Clay 100	Diaspore 100	—	1.1415	[d]338.9	13.1	f+g+w.6_c_d1.o
Comment: The following cases investigate the effect of mixing of fuel, goethite, diaspore+Gd and water in the bottom layer							
Fuel and Goethite 39.0 Water 60.0 Diaspore 1.0 [0.0566][e]	Clay 100	Diaspore 100	—	0.9971	[d]347.9	14.5	f+g+d.01+w.6_c_d1.o
Fuel and Goethite 38.0 Water 60.0 Diaspore 2.0 [0.116][e]	Clay 100	Diaspore 100	—	0.8895	[d]357.5	16.0	f+g+d.02+w.6_c_d1.o
Fuel and Goethite 35.0 Water 60.0 Diaspore 5.0 [0.316][e]	Clay 100	Diaspore 100	—	0.6913	[d]389.3	19.3	f+g+d.05+w.6_c_d1.o
[b]Fuel and Goethite 35.0 Water 60.0 Diaspore 5.0 [0.316][e]	Clay 100	Diaspore 100	—	0.7203	[d]389.3	18.2	f+g+d.05+w.6_c_d1_t.o
Fuel and Goethite 48.0 Water 50.0 Diaspore 2.0 [0.920][e]	Clay 100	Diaspore 100	—	0.9153	[d]261.9	19.6	f+g+d.02+w.5_c_d1.o
[b]Fuel and Goethite 48.0 Water 50.0 Diaspore 2.0 [0.920][e]	Clay 100	Diaspore 100	—	0.9709	[d]261.9	18.1	f+g+d.02+w.5_c_d1_t.o
Fuel and Goethite 48.0 Water 50.0 Diaspore 2.0 [0.920][e]	Clay 100	Similar to case f+g+d.02+w.5_c_d1, but diaspore neglected	—	0.9153	[d]261.9	19.6	f+g+d.02+w.5_c1.o
Fuel and Goethite 47.5 Water 50.0 Diaspore 2.5 [0.116][e]	Clay 100	Diaspore 100	—	0.8841	[d]264.8	20.0	f+g+d.025+w.5_c_d1.o
Fuel and Goethite 57.5 Water 40.0 Diaspore 2.5 [0.0960][e]	Clay 100	Diaspore 100	—	0.8922	[d]201.2	23.5	f+g+d.025+w.4_c_d1.o
Fuel and Goethite 57.0 Water 40.0 Diaspore 3.0 [0.116][e]	Clay 100	Diaspore 100	—	0.8650	[d]203.1	23.3	f+g+d.03+w.4_c_d1.o
[b]Fuel and Goethite 57.0 Water 40.0 Diaspore 3.0 [0.116][e]	Clay 100	Diaspore 100	—	0.9278	[d]203.1	22.5	f+g+d.03+w.4_c_d1_t.o
Comment: The following cases investigate the effect of not neglecting thoria in the fuel layer							
Fuel and Goethite 57.0 Water 60.0 Thoria 5.0	Clay 100	Diaspore 100	—	1.0487	[d]376.6	18.4	f+g+t.05+w.6_c_d1.o
Fuel and Goethite 47.0 Water 50.0 Diaspore 2.0 [0.0940][e] Thoria 1.0	Clay 100	Diaspore 100	—	0.8967	[d]265.9	20.5	f+g+d.02+t.01+w.5_c_d1.o
Comment: The following cases investigate the effect of mixing water in the clay layer							
[a]Fuel and Goethite 38.0 Water 60.0 Diaspore 2.0 [0.116][e]	Clay 100	Diaspore 100	—	0.8917	[d]357.5	16.0	f+g+d.02+w.6a_c_d1.o
Fuel and Goethite 38.0 Water 60.0 Diaspore 2.0 [0.116][e]	Clay 90.0 Water 10.0	Diaspore 100	—	0.8788	[d]357.5	16.0	f+g+d.02+w.6_c.9_d1.o
[a]Fuel and Goethite 38.0 Water 60.0 Diaspore 2.0 [0.116][e]	Clay 90.0 Water 10.0	Diaspore 100	—	0.8819	[d]357.5	16.2	f+g+d.02+w.6a_c.9_d1.o

Bottom Layer Contents by Volume (%)	Next Layer Contents by Volume (%)	Next Layer Contents by Volume (%)	Top Layer Contents by Volume (%)	$k_{eff} + 2\sigma$	H/X Ratio	AENCF (keV)	MCNP Output File Name
[a]Fuel and Goethite 38.0 Water 60.0 Diaspore 2.0 [0.116][e]	Clay 80.0 Water 20.0	Diaspore 100	—	0.8733	[d]357.5	16.1	f+g+d.02+w.6a_c.8_d1.o
[a]Fuel and Goethite 38.0 Water 60.0 Diaspore 2.0 [0.116][e]	Clay 71.2 Water 28.8	Diaspore neglected	—	0.8670	[d]357.5	16.6	f+g+d.02+w.6a_c.712_d1.o
Comment: The following cases investigate the effect of mixing fuel, goethite, water and clay in the bottom layer							
Fuel and Goethite 35.0 Water 60.0 Clay 5.0	Clay 100	Diaspore 100	—	1.1241	[d]378.3	12.0	f+g+c.05+w.6a_c_d1.o
Fuel and Goethite 20.0 Water 60.0 Clay 20.0	Clay 100	Diaspore 100	—	1.0093	[d]614.4	8.8	f+g+c.2+w.6_c_d1.o
Fuel and Goethite 15.0 Water 60.0 Clay 25.0	Clay 100	Diaspore 100	—	0.9242	[d]797.6	7.5	f+g+c.25+w.6_c_d1.o
Fuel and Goethite 15.0 Water 60.0 Alternate Clay 25.0	Clay 100	Diaspore 100	—	0.9377	[d]799.6	7.7	f+g+c.25+w.6_c_d1a.o
Fuel and Goethite 10.0 Water 60.0 Clay 30.0	Clay 100	Diaspore 100	—	0.7831	[d]1162.9	6.3	f+g+c.3+w.6_c_d1.o
Fuel and Goethite 10.0 Water 60.0 Alternate Clay 30.0	Alternate Clay 100	Diaspore 100	—	0.7981	[d]1166.3	6.5	f+g+c.3+w.6_c_d1a.o
Comment: The following cases investigate the effect of mixing fuel, goethite, diaspore+Gd, clay and water in the bottom layer (the most likely configurations)							
Fuel and Goethite 33.25 Water 60.0 Diaspore 1.75 [0.116][e] Clay 5.0	Clay 100	Diaspore 100	—	0.8785	[d]398.9	15.0	f+g+c.05+d.018+w.6_c_d1.o
Similar to previous case, but WP is surrounded by dry tuff	Clay 100	Diaspore 100	—	0.9123	[d]398.9	14.0	fgc.05d.018w.6_c_d_t.o
Fuel and Goethite 33.0 Water 60.0 Diaspore 2.0 [0.134][e] Clay 5.0	Clay 100	Diaspore 100	—	0.8565	[d]402.1	15.2	f+g+c.05+d.02+w.6_c_d1.o
Fuel and Goethite 19.0 Water 60.0 Diaspore 1.0 [0.116][e] Clay 20.0	Clay 100	Diaspore 100	—	0.7971	[d]647.4	10.7	f+g+c.2+d.01+w.6_c_d1.o
Fuel and Goethite Clay	Diaspore 100	—	—	0.2301	[d]557.3	11.8	f+g+c_d1.o

NOTES: [a] Similar to case f+g+d.02+w.6_c_d1.o but water volume fraction is 0.6 in goethite (axial) ends
[b] WP is surrounded by dry tuff.
[c] Values are approximate and are for the first axial region.
[d] The H/X values have been axially averaged.
[e] The Gd content in the layer with fuel in units of kg.

The results in Table 6-18 show that the very conservative assumption of completely separating the Gd containing layer from the degraded fuel layer can produce high values for k_{eff}. Mixing of water in non-fuel layers has a minor effect on the results. Also, the placement of fuel in the bottom layer produces a more reactive configuration than other arrangements. Mixing of small amounts of diaspore containing Gd in the fuel layer drastically reduces the values of k_{eff}. A similar effect is obtained by the addition of clay in the fuel mixture. The most likely

configurations, those containing a mixture of degradation products in the bottom layer, have the lowest values of k_{eff}.

Results for degraded fuel mixed with post-breach clay are given in Table 6-19. The axial loading of the degraded fuel is preserved in all cases and the thoria is neglected for most cases. The initial gadolinium content in the Al-$GdPO_4$ mixture is 1 wt.%. These configurations contain only two layers. The clay layer is considered dry based on the most conservative results from Table 6-18. Water fills any vacant spaces not occupied by degradation products in the WP.

Table 6-19. Results for Completely Degraded Components in the WP with Post-Breach Clay

Bottom Layer Contents by Volume (%)	Next Layer Contents by Volume (%)	$k_{eff} + 2\sigma$	H/X Ratio	AENCF (keV)	MCNP Output File Name
Fuel 100	Clay 100	0.3813	0	771.6	f_psb1.o
Fuel 40.0 Water 60.0	Clay 100	0.4627	4.2	399.3	f.4+w_psb1.o
Fuel 12.5 Water 87.5	Clay 100	0.6901	19.5	139.8	f.125+w_psb1.o
Fuel 5.0 Water 95.0	Clay 100	0.9421	52.8	58.9	f.05+w_psb1.o
Fuel 5.0 Water 85.0 Clay 10.0	Clay 100	0.8941	47.7	63.3	f+psb.1+w.85_psb1.o
[a] Fuel 5.0 Water 85.0 Clay 10.0	Clay 100	0.8922	47.7	63.5	f+psb.1+w.85_psb1a.o
Fuel 5.0 Water 75.0 Clay 20.0	Clay 100	0.8428	42.7	68.6	f+psb.2+w.75_psb1.o
Fuel 0.5 Water 60.0 Clay 39.5	Clay 100	0.8328	352.2	14.2	f+psb.4+w.6_psb1.o
Fuel 0.25 Water 40.0 Clay 59.75	Clay 100	0.5219	500.7	14.3	f+psb.6+w.4_psb1.o

NOTE: [a] Same as previous case but uses the alternate post-breach clay.

It can be seen from Table 6-19 that the values of k_{eff} are smaller than for similar cases in Table 6-18. It is seen that the larger the amount of clay mixed with the fuel the smaller the value of k_{eff}.

6.2.8 Results for Axial Redistribution of Fully Degraded Fuel in the DOE SNF Canister and WP

Results from redistributing the fuel in the axial direction are given in Table 6-20. Cases from Tables 6-17 and 6-18 (as indicated in the table) are used to illustrate this effect in the DOE SNF canister and WP, respectively. These cases are described in Section 5.2.2.8 and they were run to find the effect of the axial redistribution of the fissile material inside the waste package or SNF

canister. The length of each axial fuel region is multiplied by a length multiplication factor, L_m, which is defined to be the ratio of the lengths of the fuel region to its intact length. These length factors and the total length of all fuel regions are listed in the table. While the lengths of the fuel region change, the compositions of the fuel and other degraded materials for each region are assumed to remain unchanged. Other than one case where the fuel mixture from the lower fuel region (the lower 42 in., half of the fuel as shown in Figure 5-1) fills all the regions; no mixing or redistribution between fuel regions is assumed. The gadolinium content in the Al-$GdPO_4$ mixture is 1 wt.% for all cases.

Table 6-20. Results for Axial Redistribution of Fully Degraded Fuel in the DOE SNF Canister and WP

L_m (Table)	Total Length of Fuel Region (cm)	$k_{eff} + 2\sigma$	H/X Ratio	AENCF (keV)	MCNP Output File Name
[a]0.6279	133.978	0.9422	270.2	23.4	fgwd6L.63.o
[a,b]0.6279	133.978	0.9687	270.2	23.6	fgwd6L.63a.o
0.75	160.02	0.9200	270.2	23.5	fgwd6L.75.o
0.90	192.024	0.8949	270.2	24.1	fgwd6L.9.o
1.0 (Table 6-17)	213.36	0.8750	270.2	24.1	f+g+w65%+d6%_d1p.o
1.10	234.696	0.8617	270.2	23.9	fgwd6L1.1.o
1.25	266.7	0.8364	270.2	24.5	fgwd6L1.25.o
1.50	320.04	0.8019	270.2	24.4	fgwd6L1.5.o
[a]0.1726	36.827	1.3943	41.0	56.9	fgw5_L.173.o
0.25	53.34	1.3525	41.0	57.6	fgw5_L.25.o
0.50	106.68	1.1524	41.0	63.3	fgw5_L.5.o
0.75	160.02	0.9925	41.0	67.6	fgw5_L.75.o
0.90	192.024	0.9174	41.0	70.2	fgw5_L.9.o
1.0 (Table 6-17)	213.36	0.8720	41.0	72.7	f+g+w5%_d1p.o
1.10	234.696	0.8335	41.0	74.4	fgw5_L1.1.o
1.25	266.7	0.7806	41.0	75.7	fgw5_L1.25.o
1.50	320.04	0.7072	41.0	78.9	fgw5_L1.5.o
0.50	106.68	0.9952	357.5	15.5	fgd2w60_L.5.o
0.75	160.02	0.9443	357.5	15.7	fgd2w60_L.75.o
0.90	192.024	0.9121	357.5	15.8	fgd2w60_L.9.o
1.0 (Table 6-18)	213.36	0.8895	357.5	16.0	f+g+d.02+w.6_c_d1.o
1.10	234.696	0.8740	357.5	16.0	fgd2w60_L1.1.o
1.25	266.7	0.8469	357.5	16.6	fgd2w60_L1.25.o
1.50	320.04	0.8048	357.5	16.6	fgd2w60_L1.5.o

NOTES: [a] Fuel fills DOE SNF canister in the radial direction.
[b] Fuel from lower axial region fills all regions thus modelling more fuel than is actually present.

The results show that spreading out the fuel layer reduces k_{eff}.

6.3 RESULTS FOR URANIUM DECAY EFFECTS

6.3.1 Results for Selected Cases to Demonstrate the Effect of Decay of Uranium

Results for the selected cases used to illustrate the effects of uranium decay are shown in Table 6-21. Decay times shown are 50,000, 100,000, and 150,000 years. After the longest of these times the Th-232, U-235 and U-238 content is essentially unchanged, while the most significant change is the reduction of U-233, the primary fissile component of the LWBR fuel. The time zero cases shown in the table are the selected cases from previous result sections as indicated in the table. These cases are described in Section 5.2.3.

Table 6-21. Results for Selected Cases to Show Effects of Uranium Decay

Time, years (Table)	Gd Content in Al Fill (%)	$k_{eff} + 2\sigma$	H/X Ratio	AENCF (keV)	MCNP Output File Name
0 (Table 6-11)	0	0.9669	103.9	60.8	lg_.4.o
50,000	0	0.9138	129.1	58.5	axdcy1_.4.o
100,000	0	0.8516	160.5	57.7	axdcy2_.4.o
150,000	0	0.7884	199.5	57.9	axdcy3_.4.o
0 (Table 6-11)	0	0.9645	90.9	66.0	lg_.3.o
150,000	0	0.7856	174.5	63.3	axdcy3_.3.o
0 (Table 6-11)	0	0.9693	116.9	56.0	lg_.5.o
150,000	0	0.7826	224.4	54.2	axdcy3_.5.o
0 (Table 6-13)	1	1.0510	126.8	54.8	p1.25a+g+w.6_d1_1.o
50,000	1	0.9779	157.6	53.4	s6dcy1a.o
100,000	1	0.8974	195.9	53.2	s6dcy2a.o
150,000	1	0.8167	243.4	53.6	s6dcy3a.o
0 (Table 6-7)	1	0.9957	51.9	93.3	s3bm-.o
50,000	1	0.9401	64.5	90.4	s3dy1a.o
100,000	1	0.8811	80.2	87.6	s3dy2a.o
150,000	1	0.8191	99.7	88.0	s3dy3a.o
0 (Table 6-3)	0	0.9115	51.9	99.4	cod1+al1+st.o
50,000	0	0.8633	64.5	95.8	intdy1.o
100,000	0	0.8107	80.2	93.0	intdy2.o
150,000	0	0.7518	99.7	93.8	intdy3.o

The uranium decay has a very important effect in reducing the k_{eff} of the system. This finding can be combined with the results from Section 6.3, showing that for highly degraded configurations (that require very long times) the potential for criticality is drastically reduced.

6.4 RESULTS FOR HOMOGENEOUS REPRESENTATION OF INTACT SEED ASSEMBLY

6.4.1 Results for Cases to Demonstrate the Homogeneous Representation of Intact Seed Assembly

A homogeneous model of the intact seed assembly is described in Section 5.2.4. This model may be useful in determining if similar fuels (Th/U oxide) can be bound by these results. Results for the homogeneous representation of the intact assembly are shown in Table 6-22. The number densities for the homogeneous fuel regions are determined by conserving the volume fraction of the assembly shroud (if included in the homogeneous mixture), fuel pins and water inside the assembly. For these cases the fuel voids are assumed to have been saturated with water, the assembly is surrounded by aluminum fill material that does not contain gadolinium and the thoria end reflectors are also homogenized. The cross section is hexagonal except for some cases where it is cylindrical, as noted in the table. Case "cod1+al1+st.o" from Table 6-3 is used as a comparison for these results, and this result is repeated in the table. These cases are described in Section 5.2.4.

Table 6-22. Results for Homogeneous Representation of Intact Assembly

Description	$k_{eff} + 2\sigma$	H/X Ratio	AENCF (keV)	MCNP Output File Name
Heterogeneous case from Table 6-3	0.9115	51.9	99.4	cod1+al1+st.o
The separate axial and radial fuel regions are modeled as separate homogeneous mixtures inside the assembly shroud	0.8959	51.8	95.8	hm3d_hxa.o
Assembly (including shroud) is averaged in radial direction to form 4 axial homogeneous regions	0.9176	63.0	87.4	hm1x4_hxa.o
Assembly (including shroud) is averaged in radial and axial directions to form a single homogeneous region	0.8839	74.6	85.5	hm1x1_hxa.o
Same as previous case, but has cylindrical cross-section	0.8822	74.6	86.4	hm1x1_cya.o
Low zone and thoria steps redistributed to extend the axial length of assembly; shroud explicitly modeled; 12 vacant positions averaged into thoria	0.8371	51.8	106.3	hm2d_hxa.o
Same as previous case but 12 vacant positions averaged into low fuel zone	0.8436	51.8	104.5	hm2d_hxb.o
Same as previous case but shroud replaced with Al fill material	0.8428	51.8	103.8	hm2d_hxb-.o
Same as case hm2d_hxa.o but cylindrical cross-section	0.8331	51.8	108.0	hm2d_cya.o
Same as case hm2d_hxb.o but cylindrical cross-section	0.8400	51.8	103.7	hm2d_cyb.o

7. REFERENCES

1. Briesmeister, J.F., ed. 1997. *MCNP-A General Monte Carlo N-Particle Transport Code.* LA-12625-M, Version 4B. Los Alamos, New Mexico: Los Alamos National Laboratory. ACC: MOL.19980624.0328.

2. Paxton, H.C. and Pruvost, N.L. 1987. *Critical Dimensions of Systems Containing 235U, 239Pu and 233U.* LA-10860-MS. Los Alamos, New Mexico: Los Alamos National Laboratory. TIC: 209447.

3. CRWMS M&O 1998. *Software Qualification Report for MCNP Version 4B2, A General Monte Carlo N-Particle Transport Code.* CSCI: 30033 V4B2LV. DI: 30033-2003, Rev. 01. Las Vegas, Nevada: CRWMS M&O. ACC: MOL.19980622.0637.

4. Department of Energy 1999. *Shippingport LWBR (Th/U Oxide) Fuel Characteristics for Disposal Criticality Analysis.* DOE/SNF/REP-051, Rev. 0. Washington, D.C.: Department of Energy. TIC: 245631.

5. CRWMS M&O 1999. *Waste Package Materials Properties.* BBA000000-01717-0210-00017 REV 00. Las Vegas, Nevada: CRWMS M&O. ACC: MOL.19990407.0172.

6. DOE (Department of Energy) 1999. "Design Specification." Volume 1 of *Preliminary Design Specification for Department of Energy Standardized Spent Nuclear Fuel Canisters.* DOE/SNF/REP-011, Rev. 3. Washington, D.C.: U.S. Department of Energy, Office of Spent Fuel Management and Special Projects. TIC: 246602.

7. CRWMS M&O 1999. *DOE SRS HLW Glass Chemical Composition.* BBA000000-01717-0210-00038 REV 00. Las Vegas, Nevada: CRWMS M&O. ACC: MOL.19990215.0397.

8. Stout, R.B. and Leider, H.R., eds. 1991. *Preliminary Waste Form Characteristics Report.* Version 1.0. Livermore, California: Lawrence Livermore National Laboratory. ACC: MOL.19940726.0118.

9. CRWMS M&O 2000. *EQ6 Calculation for Chemical Degradation of Shippingport LWBR (Th/U Oxide) Spent Nuclear Fuel Waste Package.* CAL-EDC-MD-000008 REV 00. Las Vegas, Nevada: CRWMS M&O. URN-0551

10. Audi, G. and Wapstra A.H. 1995. *Atomic Mass Adjustment: Mass List for Analysis.* Upton, New York: Brookhaven National Laboratory, National Nuclear Data Center. TIC: 242718.

11. Roberts, W.L.; Rapp, G.R., Jr.; and Weber, J. 1974. *Encyclopedia of Minerals.* Pages 172, 240, 241, 413, 500, 689, and 690. New York, New York: Van Nostrand Reinhold. TIC: 238571.

12. Parrington, J.R.; Knox, H.D.; Breneman, S.L.; Baum, E.M.; and Feiner, F. 1996. *Nuclides and Isotopes, Chart of the Nuclides.* 15th Edition. San Jose, California: General Electric Company and KAPL, Inc. TIC: 233705.

13. MO9708RIB00040.000. RIB Item #40/Rev. 0: Hydrologic Characteristics: Hydrogeologic Unit Characteristics. Submittal date: 08/29/1997. Submit to RPC URN-0534.

14. Lipman, P.W.; Christiansen, R.L.; and O'Connor, J.T. 1966. *A Compositionally Zoned Ash-Flow Sheet in Southern Nevada.* Professional Paper 524-F. Washington, D.C.: U.S. Geological Survey. TIC: 219972.

15. Not Used.

16. Brown, R.L. and Richards, J.C. 1970. *Principles of Powder Mechanics, Essays on the Packing and Flow of Powders and Bulk Solids.* Pages 17-20. New York, New York: Pergamon Press. TIC: 245119.

17. Gupta, C.K. and Sathiyamoorthy, D. 1999. *Fluid Bed Technology in Materials Processing.* Boca Raton, Florida: CRC Press. TIC: 248463.

18. CRWMS M&O 1996. *Waste Package Filler Material Testing Report.* BBA000000-01717-2500-00008 REV 02. Las Vegas, Nevada: CRWMS M&O. ACC: MOL.19970121.0004.

19. AP-SV.1Q, Rev. 0, ICN 2. *Control of the Electronic Management of Information.* Washington, D.C.: U.S. Department of Energy, Office of Civilian Radioactive Waste Management. ACC: MOL.20000831.0065.

20. CRWMS M&O 2000. Process Control Evaluation for Supplement V: (DOE SNF Analysis Plan for FY 2000 (TPDP) TDP-EDC-MD-000003 REV 01). Las Vegas, Nevada: CRWMS M&O. ACC: MOL.20000718.0187.

21. AP-3.15Q, Rev. 1, ICN 2. *Managing Technical Product Inputs.* Washington, D.C.: U.S. Department of Energy, Office of Civilian Radioactive Waste Management. ACC: MOL.20000713.0363.

22. CRWMS M&O 2000. *DOE SNF Analysis Plan for FY 2000.* Development Plan TDP-EDC-MD-000003 REV 01. Las Vegas, Nevada: CRWMS M&O. ACC: MOL.20000510.0169.

23. AP-3.12Q, Rev. 0, ICN 2. Calculations. Washington, D.C.: U.S. Department of Energy, Office of Civilian Radioactive Waste Management. ACC: MOL.20000620.0068.

24. Taylor, W.J. 1997. "Incorporating Hanford 15 Foot (4.5 Meter) Canister into Civilian Radioactive Waste Management System (CRWMS) Baseline." Memorandum from W.J. Taylor (DOE) to J. Williams (Office of Waste Acceptance Storage and Transportation), April 2, 1997. ACC: HQP.19970609.0014.

25. AP-SI.1Q, Rev. 2, ICN 4. *Software Management.* Washington, D.C.: U.S. Department of Energy, Office of Civilian Radioactive Waste Management. ACC: MOL.20000223.0508.

26. ASTM B 811-90. 1991. *Standard Specification for Wrought Zirconium Alloy Seamless Tubes for Nuclear Reactor Fuel Cladding.* Philadelphia, Pennsylvania: American Society for Testing and Materials. TIC: 239780.

27. ASM International 1990. *Properties and Selection: Nonferrous Alloys and Special-Purpose Materials, Specific Metals and Alloys.* Volume 2 of *Metals Handbook.* 10th Edition. Metals Park, Ohio: American Society for Metals. TIC: 239807.

28. ASTM B 575-97. 1998. *Standard Specification for Low-Carbon Nickel-Molybdenum-Chromium, Low-Carbon Nickel-Chromium-Molybdenum, Low-Carbon Nickel-Chromium-Molybdenum-Copper and Low-Carbon Nickel-Chromium-Molybdenum-Tungsten Alloy Plate, Sheet, and Strip.* West Conshohocken, Pennsylvania: American Society for Testing and Materials. TIC: 241816.

29. ASTM A 276-91a. 1991. *Standard Specification for Stainless and Heat-Resisting Steel Bars and Shapes.* Philadelphia, Pennsylvania: American Society for Testing and Materials. TIC: 240022.

30. ASTM G 1-90 (Reapproved 1999). 1990. *Standard Practice for Preparing, Cleaning, and Evaluating Corrosion Test Specimens.* West Conshohocken, Pennsylvania: American Society for Testing and Materials. TIC: 238771.

31. ASTM A 516/A 516M - 90. 1991. *Standard Specification for Pressure Vessel Plates, Carbon Steel, for Moderate- and Lower-Temperature Service.* Philadelphia, Pennsylvania: American Society for Testing and Materials. TIC: 240032.

32. ASTM A 20/A 20M-97a. 1997. *Standard Specification for General Requirements for Steel Plates for Pressure Vessels.* West Conshohocken, Pennsylvania: American Society for Testing and Materials. TIC: 242529.

33. Davis, J.W. 1998. "Installation Notification MCNP4B2, CSCI 30033 V4BLV." Interoffice correspondence from J.W. Davis (CRWMS M&O) to G. Carlisle (CRWMS M&O), March 16, 1998, LV.WP.JWD.03/98-048, with attachment. ACC: MOL.19980417.0061; MOL.19980417.0062.

34. ASTM A 240/A 240M-97a. 1997. Standard Specification for Heat-Resisting Chromium and Chromium-Nickel Stainless Steel Plate, Sheet, and Strip for Pressure Vessels. West Conshohocken, Pennsylvania: American Society for Testing and Materials. TIC: 239431.

35. ASME (American Society of Mechanical Engineers) 1998. *1998 ASME Boiler and Pressure Vessel Code*. New York, New York: American Society of Mechanical Engineers. TIC: 247429.

36. ASM International 1987. *Corrosion.* Volume 13 of *Metals Handbook.* 9th Edition. Metals Park, Ohio: ASM International. TIC: 209807.

37. DOE (U.S. Department of Energy) 1998. "Design Specification." Volume 1 of *Preliminary Design Specification for Department of Energy Standardized Spent Nuclear Fuel Canisters.* DOE/SNF/REP-011, Rev. 1. Washington, D.C.: U.S. Department of Energy, Office of Spent Fuel Management and Special Projects. TIC: 241528.

8. ATTACHMENTS

Attachment I: Shippingport LWBR Single-Assembly DOE SNF Basket Assembly (Sketch No.: SK-0134 REV 00)

Attachment II: List of MCNP output files provided on electronic media (compact disk [CD]) (Attachment IV)

Attachment III: List of worksheets in Excel spreadsheet "fuel_mass.xls" contained on the electronic media (CD) (Attachment IV)

Attachment IV: Electronic Media (CD) containing the MCNP output files and Excel spreadsheets

Attachment I

Shippingport LWBR Single-Assembly DOE SNF Canister and Basket Assembly

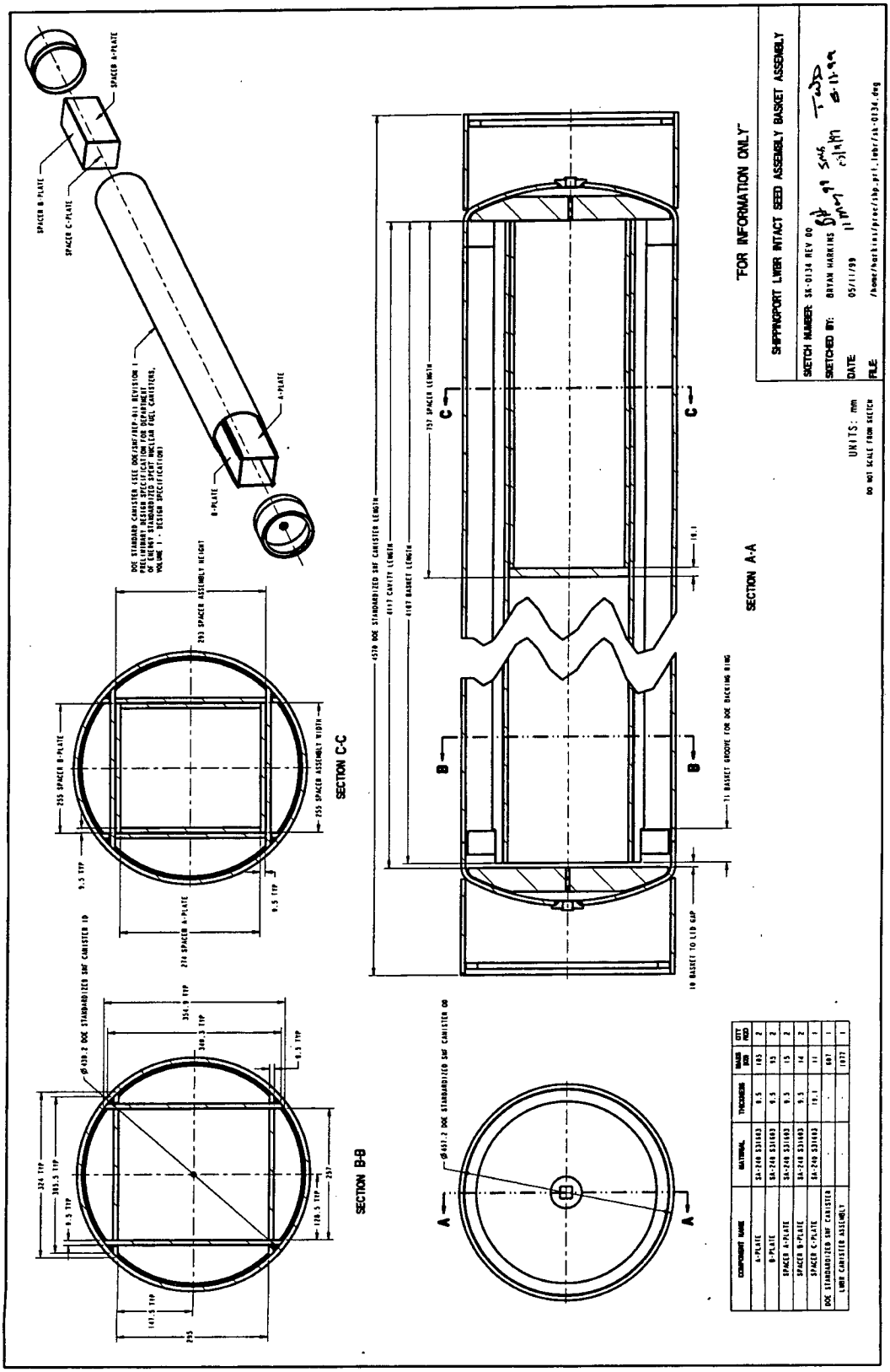
SPACER A-PLATE
SPACER B-PLATE
SPACER C-PLATE
A-PLATE
B-PLATE
DOE STANDARD CANISTER (SEE DOE/SNF/REP-011 REVISION 1 PEER REVIEW DRAFT DESIGN SPECIFICATION FOR DEPARTMENT OF ENERGY STANDARDIZED SPENT NUCLEAR FUEL CANISTERS, VOLUME 1 - DESIGN SPECIFICATION)
293 SPACER ASSEMBLY HEIGHT
255 SPACER B-PLATE
255 SPACER ASSEMBLY WIDTH
9.5 TYP
276 SPACER A-PLATE
SECTION C-C
Ø439.2 DOE STANDARDIZED SNF CANISTER ID
354.0 TYP
340.3 TYP
324 TYP
305.5 TYP
178.5 TYP
237
141.5 TYP
295
SECTION B-B
4370 DOE STANDARDIZED SNF CANISTER LENGTH
4147 CAVITY LENGTH
4107 BASKET LENGTH
737 SPACER LENGTH
19.1
71 BASKET GROOVE FOR DOE BACKING RING
10 BASKET TO LID GAP
Ø437.2 DOE STANDARDIZED SNF CANISTER OD
SECTION A-A
FOR INFORMATION ONLY
SHIPPINGPORT LWBR INTACT SEED ASSEMBLY BASKET ASSEMBLY
SKETCH NUMBER: SK-0134 REV 00
SKETCHED BY: BRYAN HARKINS
DATE 05/11/99
FILE /home/harkins/proe/shp_prt_lwbr/sk-0134.dwg
UNITS: mm
DO NOT SCALE FROM SKETCH
COMPONENT NAME | MATERIAL | THICKNESS | NAME DOS | QTY REQ
A-PLATE | SA-240 S31603 | 9.5 | 103 | 2
B-PLATE | SA-240 S31603 | 9.5 | 93 | 2
SPACER A-PLATE | SA-240 S31603 | 9.5 | 15 | 2
SPACER B-PLATE | SA-240 S31603 | 9.5 | 14 | 2
SPACER C-PLATE | SA-240 S31603 | 19.1 | 11 | 1
DOE STANDARDIZED SNF CANISTER | | | 007 | 1
LWBR CANISTER ASSEMBLY | | | 1077 | 1

Attachment II

Table II-1. MCNP Output Files Contained on the Electronic Media (Attachment IV)

File Name /Directory Name	Size (bytes)	Date of Last Access	Time of Last Access
outputs	N/A	09/10/2000	5:04p
Directory of D:\outputs			
cod1+al1+st+g.o	589,397	12/31/1999	3:56p
cod1+al1+st.o	553,882	12/24/1999	4:40p
cod1+al1+st_.5.o	553,886	12/24/1999	11:58p
cod1+al1+st_.9.o	553,947	12/25/1999	3:37a
cod1+al1+st_c.o	553,986	12/25/1999	7:15a
cod1+al1.o	550,933	12/24/1999	1:01p
cod1+al1_.1+st.o	554,978	12/25/1999	10:36a
cod1+al1_.1+st_c.o	553,362	12/24/1999	11:34a
cod1+al1_.1.o	586,371	12/24/1999	1:15p
cod1+al1a.o	652,173	01/03/2000	11:25a
cod1+g.o	579,907	12/24/1999	3:18p
cod1+st.o	550,904	12/24/1999	5:21p
cod1+wa.o	548,480	12/24/1999	7:15p
cod1.o	548,007	12/24/1999	9:15p
cod1_.2.o	548,631	12/25/1999	12:03a
cod1_.4.o	548,523	12/25/1999	2:22a
cod1_.6.o	548,355	12/25/1999	4:29a
cod1_.8.o	548,130	12/25/1999	6:31a
cod1_o.1.o	551,874	04/26/2000	7:32p
cod1_o.2.o	550,465	04/26/2000	2:37p
cod1_o.4.o	550,111	04/26/2000	4:34p
cod1_o.6.o	549,777	04/26/2000	6:28p
cod1_o.8.o	550,103	04/26/2000	8:21p
cod1_o1.o	551,649	04/26/2000	4:19p
int_tf1.o	559,069	03/28/2000	3:42p
decay	N/A	09/10/2000	5:06p
degraded	N/A	09/10/2000	5:06p
preb_clay	N/A	09/10/2000	5:39p
table20	N/A	09/10/2000	5:39p
table22	N/A	09/10/2000	5:41p
Directory of D:\outputs\decay			
intdy1.o	553,444	03/24/2000	8:36p
intdy2.o	553,558	03/24/2000	5:15p
intdy3.o	553,478	03/24/2000	1:48p
Directory of D:\outputs\degraded			
axial	N/A	09/10/2000	5:06p
homo	N/A	09/10/2000	5:09p
pitch	N/A	09/10/2000	5:13p

File Name /Directory Name	Size (bytes)	Date of Last Access	Time of Last Access
seq2	N/A	09/10/2000	5:14p
seq3	N/A	09/10/2000	5:16p
seq4	N/A	09/10/2000	5:20p
seq5	N/A	09/10/2000	5:24p
seq6	N/A	09/10/2000	5:26p
seq9	N/A	09/10/2000	5:34a
Directory of D:\outputs\degraded\axial			
decay	N/A	09/10/2000	5:06p
lg0.o	586,696	12/17/1999	12:57p
lg0_g1.o	588,800	12/17/1999	4:49p
lg_.1.o	586,516	12/17/1999	8:53p
lg_.1_g1.o	588,797	12/18/1999	12:34a
lg_.2.o	586,920	12/18/1999	4:34a
lg_.2_g1.o	589,383	12/18/1999	8:19a
lg_.3.o	585,737	12/20/1999	6:55p
lg_.3_g1.o	588,961	12/18/1999	3:47p
lg_.4.o	586,766	12/18/1999	7:46p
lg_.4_g.1.o	583,797	12/18/1999	11:26p
lg_.4_g.1a.o	588,649	12/19/1999	3:02a
lg_.4_g.5.o	588,965	12/19/1999	6:35a
lg_.4_g.75.o	588,787	12/19/1999	10:08a
lg_.4_g1.o	589,117	12/19/1999	1:38p
lg_.5.o	587,040	12/19/1999	5:42p
lg_.5_g1.o	588,961	12/19/1999	9:13p
lg_.5_g1a.o	633,664	12/20/1999	1:36a
lg_.6.o	586,113	12/21/1999	12:04a
lg_.6_g1.o	588,508	12/21/1999	2:55a
preb_clay	N/A	09/10/2000	5:08p
Directory of D:\outputs\degraded\axial\decay			
axdcy1_.4.o	584,126	03/27/2000	11:51a
axdcy2_.4.o	587,060	03/28/2000	1:05p
axdcy3_.3.o	587,149	03/24/2000	3:44p
axdcy3_.4.o	585,676	03/28/2000	4:45p
axdcy3_.5.o	587,809	03/24/2000	8:09p
Directory of D:\outputs\degraded\axial\preb_clay			
prc_.4.o	559,040	03/22/2000	7:46p
rf_.4.o	528,191	01/17/2000	5:55p
Directory of D:\outputs\degraded\homo			
f+g+w10%+d17.2%_d1p.o	525,628	12/23/1999	2:59p
f+g+w10%_d1p.o	548,136	03/08/2000	10:02a
f+g+w20%+d15.6%_d1p.o	525,683	12/23/1999	6:07p
f+g+w20%_d1+w10%p.o	522,200	03/07/2000	7:53p
f+g+w20%_d1+w20%p.o	522,552	12/23/1999	10:58p
f+g+w20%_d1.o	522,274	12/23/1999	7:38p

File Name /Directory Name	Size (bytes)	Date of Last Access	Time of Last Access
f+g+w20%_d1p.o	522,175	12/24/1999	12:29a
f+g+w40%+d12.2%_d1p.o	525,580	12/24/1999	1:55a
f+g+w40%_d1p.o	522,184	12/24/1999	3:20a
f+g+w5%_d1p.o	522,274	12/24/1999	4:56a
f+g+w60%+d6%_d1p.o	525,413	12/24/1999	6:17a
f+g+w60%+d8.45%_d1p.o	525,263	12/24/1999	7:37a
f+g+w60%+t1_d1p.o	523,156	12/24/1999	9:00a
f+g+w60%_d1p.o	521,964	12/24/1999	10:18a
f+g+w65%+d1%_d1p.o	525,358	12/24/1999	11:38a
f+g+w65%+d10%_d1p.o	525,314	12/24/1999	12:51p
f+g+w65%+d5%_d1p.o	525,209	12/24/1999	2:08p
f+g+w65%+d6%_d1p.o	525,312	12/24/1999	3:28p
f+g+w65%+d7%_d1p.o	525,461	12/24/1999	4:42p
f+g+w65%+gd6%_d1p.o	524,414	12/24/1999	6:02p
f+g+w66%+t50%_d1p.o	522,745	12/24/1999	7:24p
f+g+w71%+t10%_d1p.o	523,357	12/24/1999	8:46p
f+g+w72.2%_d1p.o	522,119	12/24/1999	10:05p
f+g50%_g_d1.o	550,169	03/08/2000	11:52a
f+g87.5%_g_d1.o	522,224	12/25/1999	2:42a
f+g95%_g_d1.o	530,567	03/08/2000	5:23a
f+g_d1.o	521,394	12/25/1999	6:14a
f12.5%_g+w20%_d1.o	522,148	12/25/1999	8:05a
f12.5%_g+w40%_d1.o	522,357	12/25/1999	10:03a
f12.5%_g+w60%_d1.o	522,359	12/25/1999	12:05p
f12.5%_g_d1.o	521,778	12/25/1999	1:56p
f12.5%_g_d1a.o	507,914	12/25/1999	3:35p
f25%_g_d1.o	522,189	12/25/1999	5:39p
f50%_g_d1.o	522,595	12/25/1999	7:55p
f_g_d1.o	522,156	12/25/1999	10:23p
ga_f+g+w65%+d6%_d1p.o	531,853	12/25/1999	11:40p
gb_f+g+w65%+d6%_d1p.o	540,298	03/08/2000	8:15a
gc_f+g+w65%+d6%_d1p.o	531,951	12/26/1999	2:21a
gd_f+g+w65%+d6%_d1p.o	531,896	12/26/1999	3:31a
ge_f+g+w65%+d6%_d1p.o	531,752	12/26/1999	4:38a
gf_f+g+w65%+d6%_d1p.o	530,840	12/26/1999	5:44a
preb_clay	N/A	09/10/2000	5:12p
table20	N/A	09/10/2000	5:12p
Directory of D:\outputs\degraded\homo\preb_clay			
f+g+w+d6%_prc.o	473,849	03/22/2000	4:25p
f+g+w+d6%_prca.o	474,171	06/01/2000	6:26p
f+g+w+d6%_r1.o	441,679	01/17/2000	4:07p
Directory of D:\outputs\degraded\homo\table20			
fgw5_L.173.o	521,448	06/16/2000	12:54p
fgw5_L.25.o	520,337	06/16/2000	12:22p

File Name /Directory Name	Size (bytes)	Date of Last Access	Time of Last Access
fgw5_L.5.o	521,013	06/16/2000	12:15p
fgw5_L.75.o	520,612	06/16/2000	1:06p
fgw5_L.9.o	520,643	06/16/2000	2:26p
fgw5_L1.1.o	522,072	06/16/2000	1:25p
fgw5_L1.25.o	520,546	06/16/2000	1:52p
fgw5_L1.5.o	521,761	06/16/2000	1:11p
fgwd6L.63.o	524,234	06/15/2000	2:54p
fgwd6L.63a.o	522,891	06/15/2000	5:44p
fgwd6L.75.o	524,509	06/15/2000	4:06p
fgwd6L.9.o	524,663	06/15/2000	5:15p
fgwd6L1.1.o	523,721	06/15/2000	3:28p
fgwd6L1.25.o	523,475	06/15/2000	3:03p
fgwd6L1.5.o	523,746	06/15/2000	3:48p
Directory of D:\outputs\degraded\pitch			
preb_clay	N/A	09/10/2000	5:13p
ptch_.0.o	555,353	12/20/1999	5:11p
ptch_.25.o	554,760	12/20/1999	12:47a
ptch_.5.o	554,146	12/20/1999	4:25a
ptch_.9.o	553,577	12/17/1999	10:14p
ptch_.95.o	554,534	12/23/1999	2:17p
ptch_1-.o	657,956	12/18/1999	4:55a
Directory of D:\outputs\degraded\pitch\preb_clay			
prc1.o	523,016	03/22/2000	6:23p
rf1.o	491,037	01/17/2000	2:31p
rf1_.1.o	495,088	01/17/2000	5:50p
Directory of D:\outputs\degraded\seq2			
d_f+.1%.o	545,829	12/23/1999	4:53p
d_f+1%.o	545,925	12/23/1999	8:50p
d_f.6+.1%.o	546,037	12/24/1999	12:46a
f.6+d10%_d+1%_t.o	657,620	12/24/1999	4:49a
f.6+d_d+1%_t.o	547,125	12/24/1999	8:47a
f.6_d+1%_t.o	546,282	12/24/1999	12:51p
f.8_d+1%_t.o	546,332	12/24/1999	5:07p
f_d+.1%.o	545,728	12/24/1999	9:09p
f_d+.1%_t.o	545,922	12/25/1999	1:12a
f_d+1%.o	546,074	12/25/1999	5:09a
f_d+1%_t.o	546,021	12/25/1999	9:12a
f_f+.1%.o	544,601	12/25/1999	1:13p
f_f+.1%_t.o	544,809	12/25/1999	5:21p
f_f+1%.o	544,356	12/25/1999	9:24p
f_f+1%_t.o	555,850	01/01/2000	1:11a
fil-w_f+.1%.o	556,752	01/01/2000	6:43a
fil_f+.1%.o	544,856	12/26/1999	10:33a
preb_clay	N/A	09/10/2000	5:16p

File Name /Directory Name	Size (bytes)	Date of Last Access	Time of Last Access
Directory of D:\outputs\degraded\seq2\preb_clay			
f+d_prc.o	515,310	03/22/2000	6:40p
f+d_prcl.o	515,328	04/27/2000	7:34p
f+d_r1.o	483,437	03/28/2000	10:12a
Directory of D:\outputs\degraded\seq3			
decay	N/A	09/10/2000	5:16p
s3a.o	492,686	02/25/2000	8:41p
s3a1+w.2.o	492,471	02/26/2000	4:45a
s3a1.o	472,621	02/26/2000	12:44a
s3b.o	491,749	02/28/2000	3:51p
s3b1+w.2.o	473,508	05/09/2000	9:52p
s3b1+w.308.o	470,619	05/10/2000	2:22a
s3b1-w+w.2.o	485,355	02/26/2000	4:57a
s3b1-w+w.312.o	482,537	02/26/2000	9:56a
s3b1-w.o	486,749	02/25/2000	11:38p
s3b1.o	473,444	02/26/2000	1:36p
s3b1_r.o	469,532	02/29/2000	8:31p
s3b1_t.o	513,108	03/01/2000	12:43p
s3b1_ta.o	513,422	03/01/2000	5:29p
s3b1_taa.o	479,830	03/02/2000	7:13a
s3b1_th.o	497,562	03/01/2000	9:51p
s3b1_tw.o	480,105	03/02/2000	2:28a
s3b1dcd.03.o	572,146	03/01/2000	5:41p
s3b1dcd.05.o	494,158	03/01/2000	9:46p
s3b1dcd.1.o	494,468	03/01/2000	3:37p
s3b1dcg.2.o	495,345	03/01/2000	3:45p
s3b1dcg.3.o	495,236	03/01/2000	7:48p
s3b1dcg.4.o	578,071	03/01/2000	11:55p
s3b1dcg.5.o	493,050	03/02/2000	11:17a
s3b1dcw.6.o	504,895	03/01/2000	10:43a
s3b1dcw.7.o	504,792	03/01/2000	3:10p
s3b1dcw.7_t.o	512,069	03/30/2000	7:55p
s3b1dcw.8.o	508,543	02/29/2000	11:40p
s3b1dcw.9.o	508,022	03/01/2000	5:14a
s3b1fcw.6.o	504,772	02/29/2000	9:51p
s3b1fcw.8.o	504,457	03/01/2000	2:18a
s3b1fcw.9.o	504,141	03/01/2000	6:39a
s3b1fcw.95.o	504,975	03/02/2000	2:25p
s3b_r.o	489,241	02/28/2000	7:36p
s3bm+.o	530,988	02/28/2000	8:27p
s3bm-.o	492,266	02/29/2000	12:25a
s3bm-_r.o	489,133	03/01/2000	12:25a
s3bm.o	489,667	02/28/2000	6:27p
s3cw.5.o	508,397	03/01/2000	11:30p

File Name /Directory Name	Size (bytes)	Date of Last Access	Time of Last Access
s3cw.8.o	504,030	03/01/2000	10:04p
s3cw.8_t.o	510,989	03/31/2000	12:18a
s3cw0.o	701,495	03/07/2000	11:52p
s3psba.o	484,037	03/07/2000	7:36p
s3psbb.o	485,772	03/08/2000	2:46a
s3psbc+w.1.o	714,514	03/08/2000	10:22p
s3psbc+w.2.o	501,014	03/08/2000	5:46p
s3psbc+w.25.o	499,876	03/08/2000	8:23p
s3psbc.o	817,122	03/08/2000	9:13a
s3psbcsta.o	641,681	05/18/2000	6:34p
s3psbcstal.o	503,800	05/31/2000	9:07p
s3psbcstb.o	505,024	05/17/2000	4:12p
s3psbd.o	506,357	03/07/2000	7:12p
s3psbe.o	673,362	03/08/2000	6:40p
Directory of D:\outputs\degraded\seq3\decay			
s3dy1a.o	489,768	03/27/2000	4:39p
s3dy2a.o	490,149	03/27/2000	7:39p
s3dy3a.o	490,086	03/27/2000	10:39p
Directory of D:\outputs\degraded\seq4			
f+g+c.05+d.018+w.6_c_d1.o	484,420	03/16/2000	10:43a
f+g+c.05+d.02+w.6_c_d1.o	485,193	03/15/2000	7:06p
f+g+c.05+w.6a_c_d1.o	499,717	03/14/2000	7:20p
f+g+c.2+d.01+w.6_c_d1.o	486,431	03/15/2000	9:07p
f+g+c.2+w.6_c_d1.o	485,055	03/15/2000	1:34p
f+g+c.25+w.6_c_d1.o	486,088	03/15/2000	5:40p
f+g+c.25+w.6_c_d1a.o	485,289	06/01/2000	7:24p
f+g+c.3+w.6_c_d1.o	485,786	03/15/2000	4:00p
f+g+c.3+w.6_c_d1a.o	486,792	06/02/2000	6:58p
f+g+c_d1.o	473,541	03/16/2000	3:54p
f+g+d.01+w.6_c_d1.o	480,809	03/13/2000	2:34p
f+g+d.02+t.01+w.5_c_d1.o	481,220	03/14/2000	10:22a
f+g+d.02+w.5_c1.o	477,663	03/14/2000	10:11a
f+g+d.02+w.5_c_d1.o	479,280	03/13/2000	3:41p
f+g+d.02+w.5_c_d1_t.o	499,562	04/03/2000	11:47a
f+g+d.02+w.6_c.9_d1.o	479,652	03/14/2000	12:17p
f+g+d.02+w.6_c_d1.o	480,086	03/13/2000	3:15p
f+g+d.02+w.6a_c.712_d1.o	480,432	03/14/2000	3:26p
f+g+d.02+w.6a_c.8_d1.o	480,571	03/14/2000	2:45p
f+g+d.02+w.6a_c.9_d1.o	479,721	03/14/2000	1:26p
f+g+d.02+w.6a_c_d1.o	479,460	03/14/2000	12:33p
f+g+d.025+w.4_c_d1.o	480,492	03/13/2000	8:01p
f+g+d.025+w.5_c_d1.o	480,186	03/13/2000	5:40p
f+g+d.03+w.4_c_d1.o	479,477	03/13/2000	5:09p
f+g+d.03+w.4_c_d1_t.o	485,216	04/03/2000	5:24p

File Name /Directory Name	Size (bytes)	Date of Last Access	Time of Last Access
f+g+d.05+w.6_c_d1.o	479,580	03/13/2000	12:54p
f+g+d.05+w.6_c_d1_t.o	485,005	04/03/2000	1:39p
f+g+t.05+w.6_c_d1.o	477,262	03/14/2000	9:19a
f+g+w.271_c_d1.o	475,867	03/10/2000	4:30p
f+g+w.271_c_d1a.o	449,242	03/10/2000	5:29p
f+g+w.5_c_d1.o	477,048	03/15/2000	1:25p
f+g+w.6_c_d1.o	476,802	03/13/2000	7:18p
f+psb.1+w.85_psb1.o	464,709	03/16/2000	8:22p
f+psb.1+w.85_psb1a.o	464,421	05/31/2000	6:57p
f+psb.2+w.75_psb1.o	462,946	03/20/2000	11:03a
f+psb.4+w.6_psb1.o	463,886	03/20/2000	12:25p
f+psb.6+w.4_psb1.o	473,294	03/28/2000	1:01p
f.05+w_g_c_d1.o	469,117	03/10/2000	10:54a
f.05+w_g_c_d1_t.o	474,509	03/30/2000	6:54p
f.05+w_g_c_d1a.o	446,730	03/10/2000	11:42a
f.05+w_g_c_d1b.o	443,873	03/16/2000	1:44p
f.05+w_psb1.o	452,507	03/16/2000	4:07p
f.125+w_g_c_d1.o	470,374	03/10/2000	11:25a
f.125+w_psb1.o	452,453	03/16/2000	5:20p
f.4+w_psb1.o	454,162	03/16/2000	5:51p
f_g_c_d1.o	468,769	03/09/2000	6:13p
f_psb1.o	452,565	03/16/2000	6:53p
fgc.05d.018w.6_c_d_t.o	489,998	09/08/2000	12:42p
g_f.05+w_c_d1.o	469,429	03/10/2000	12:22p
Directory of D:\outputs\degraded\seq5			
hx_0.o	553,993	12/23/1999	11:21p
hx_0_.1-1.o	556,648	12/24/1999	7:20a
hx_0_.1-1a+d.12.o	567,602	12/24/1999	4:03p
hx_0_.1-1a+d.2.o	567,845	12/24/1999	8:43p
hx_0_.1-1a+d.4.o	567,382	12/25/1999	12:59a
hx_0_.1-1a+d.625.o	566,980	12/25/1999	4:58a
hx_0_.1-1a+fa.o	567,840	12/25/1999	9:29a
hx_0_.1-1a+fb.o	566,677	12/25/1999	2:07p
hx_0_.1-1a.o	564,442	12/24/1999	11:31a
hx_0_.1-2.o	556,698	12/25/1999	6:13p
hx_0_.1-3.o	556,859	12/25/1999	10:23p
hx_0_.1-4.o	556,895	12/26/1999	2:23a
hx_0_.1.o	555,335	12/24/1999	3:23a
hx_f.5_.1-1.o	565,873	12/26/1999	7:12a
hx_f.8_.1-1.o	565,029	12/26/1999	11:42a
hx_min-1.o	566,197	12/26/1999	5:58p
hx_min_.1-1.o	567,639	12/27/1999	5:56a
hx_min_.1-2.o	567,639	12/27/1999	11:54a
hx_min_.1-3.o	568,095	12/27/1999	6:03p

File Name /Directory Name	Size (bytes)	Date of Last Access	Time of Last Access
hx_min_.1-4.o	567,680	12/28/1999	12:03a
hx_min_.1.o	566,229	12/26/1999	11:57p
noshrd.o	553,910	12/28/1999	3:59a
noshrd_.1.o	554,925	12/28/1999	7:39a
noshrd_1.o	554,923	12/28/1999	11:18a
preb_clay	N/A	09/10/2000	5:26p
Directory of D:\outputs\degraded\seq5\preb_clay			
hx0-1_prc.o	526,691	03/22/2000	8:59p
hx0-1_r1.o	492,957	01/17/2000	5:28p
Directory of D:\outputs\degraded\seq6			
decay	N/A	09/10/2000	5:26p
fp1+g+w.2_d1_1.o	1,092,102	12/23/1999	11:59p
fp1+g+w.4_d1_1.o	1,092,001	12/24/1999	11:22a
fp1+g+w.6_d1_1.o	1,093,875	12/25/1999	12:09a
fp1+g+w.6a_d1_.1.o	1,087,886	12/25/1999	12:35p
fp1+g+w.6a_d1_1.o	1,087,781	12/26/1999	1:12a
fp1+g_d1_.1.o	1,091,825	12/26/1999	12:08p
fp1+g_d1_1.o	1,091,924	12/26/1999	11:02p
fp1_wa.o	1,095,189	12/27/1999	5:53p
fp1_wb.o	1,094,945	12/28/1999	12:44p
p1+g+w.6+d1%_d1.o	1,087,214	12/28/1999	11:35p
p1+g+w.6+d2%_d1.o	1,085,968	12/29/1999	9:56a
p1+g+w.6_d1_1.o	1,086,721	12/29/1999	9:18p
p1.25+g+w.6_d1_1.o	1,091,275	12/30/1999	7:29a
p1.25a+g+w.6+d2%_d1.o	1,090,993	12/30/1999	4:29p
p1.25a+g+w.6+d3.5_d1.o	1,090,695	12/31/1999	1:27a
p1.25a+g+w.6+d5%_d1.o	1,091,243	12/31/1999	10:15a
p1.25a+g+w.6_d1_1.o	1,086,351	12/25/1999	5:51p
p1.25b+g+w.6_d1_1.o	1,081,951	12/25/1999	11:07p
p1.5+g+w.6+d1%_d1.o	1,090,319	12/31/1999	10:59p
p1.5+g+w.6+d2%_d1.o	1,084,033	12/26/1999	6:20a
p1.5+g+w.6_d1_1.o	1,083,701	12/26/1999	11:55a
p1.62+g+w.6_d1_1.o	1,091,777	01/01/2000	11:25a
pf.5+g+w.6_d1_1.o	1,083,382	12/26/1999	8:18p
pf0+g+w.6_d1_1.o	1,098,507	01/02/2000	8:28a
preb_clay	N/A	09/10/2000	5:31p
Directory of D:\outputs\degraded\seq6\decay			
s6dcy1a.o	1,093,846	03/28/2000	3:18a
s6dcy2a.o	1,087,434	03/28/2000	10:05p
s6dcy3a.o	1,097,719	03/30/2000	9:00p
Directory of D:\outputs\degraded\seq6\preb_clay			
dry0.o	1,051,171	02/25/2000	7:48p
dry1.o	1,064,805	02/28/2000	9:01p
dry2.o	1,057,183	02/26/2000	1:10a

File Name /Directory Name	Size (bytes)	Date of Last Access	Time of Last Access
dry3.o	1,057,183	02/26/2000	6:30a
dry4.o	1,057,286	02/26/2000	11:49a
dry5.o	1,062,255	02/29/2000	7:30a
dry6.o	1,064,022	02/29/2000	5:51p
dry7.o	1,058,012	03/01/2000	3:49a
refl0.o	1,036,626	02/27/2000	8:47a
refl1.o	1,037,170	02/27/2000	2:10p
wt.714a.o	1,056,224	02/27/2000	11:29p
wt.714a1.o	1,056,329	02/28/2000	4:39a
wt.714b.o	1,056,122	02/28/2000	9:55a
wt.714c.o	1,056,327	02/28/2000	3:55p
wt.714d.o	1,056,325	02/28/2000	10:21p
wt.714e.o	1,056,293	02/29/2000	3:36a
wt.8a.o	1,057,279	02/29/2000	8:50a
wt.8e.o	1,057,286	02/29/2000	2:05p
wt.9a.o	1,057,281	02/29/2000	7:15p
wt.9e.o	1,057,136	03/01/2000	12:43a
Directory of D:\outputs\degraded\seq9			
psb1.25w.1.o	1,050,728	03/09/2000	10:19p
psb1.25w.2.o	1,048,543	03/10/2000	11:40a
psb1.25w.25.o	1,041,589	03/09/2000	3:12p
psb1.25w.25_t.o	1,046,030	09/09/2000	8:30a
psb1.25w0.o	1,058,656	03/10/2000	5:44a
s1.25a+g+d+w.1.o	1,050,918	03/04/2000	1:44p
s1.25a+g+d+w.276.o	1,048,059	03/08/2000	12:57p
s1.25a+g+d.o	1,053,901	03/03/2000	10:49p
s9flt1.o	1,051,760	05/03/2000	12:59a
s9g+d+w.6a.o	1,044,342	03/06/2000	9:59p
s9g+d+w.6a_t.o	1,048,804	09/09/2000	8:30a
s9g+d+w.6b.o	1,044,647	03/07/2000	1:24p
s9g+d+w.6b_t.o	1,050,566	09/09/2000	8:30a
s9p0a.o	1,059,679	03/03/2000	9:03a
s9p0a_w.313.o	1,044,025	03/03/2000	12:03a
s9p0a_w.o	1,055,847	03/03/2000	10:19p
s9p0b.o	1,059,530	03/04/2000	6:57a
s9p1.0a.o	1,055,778	03/05/2000	3:19a
s9p1.0a_w.313.o	1,042,826	03/03/2000	8:49a
s9p1.25a.o	1,055,041	03/05/2000	10:53p
s9p1.25a_w.2.o	1,052,093	03/03/2000	4:51a
s9p1.25a_w.313.o	1,042,203	03/03/2000	5:00p
s9p1.25ag.4+w_c_d.o	1,050,262	03/07/2000	1:40a
s9p1.5a.o	1,054,037	03/06/2000	5:04p
s9p1.5a_w.313.o	1,040,520	03/04/2000	12:41a
s9p2.0a.o	1,054,381	03/07/2000	11:39a

File Name /Directory Name	Size (bytes)	Date of Last Access	Time of Last Access
s9p2.0a_w.313.o	1,041,326	03/04/2000	8:19a
s9p2.5a.o	1,059,682	03/07/2000	10:07a
s9p2.5a_w.313.o	1,041,919	03/04/2000	4:35p
s9p3.0a.o	1,059,776	03/08/2000	9:43a
s9p3.0a_w.313.o	1,041,708	03/05/2000	1:26a
Directory of D:\outputs\preb_clay			
cod1_prc.o	532,458	03/27/2000	9:22p
cod1_prc_t1.o	536,827	03/29/2000	11:45a
cod1_prc_t2.o	537,028	03/29/2000	1:28p
cod1_r1.o	494,299	01/12/2000	2:30p
Directory of D:\outputs\table20			
fgd2w60_L.5.o	470,813	06/16/2000	4:44p
fgd2w60_L.75.o	471,125	06/16/2000	5:31p
fgd2w60_L.9.o	471,118	06/16/2000	6:21p
fgd2w60_L1.1.o	470,975	06/16/2000	7:13p
fgd2w60_L1.25.o	470,988	06/16/2000	8:06p
fgd2w60_L1.5.o	470,945	06/16/2000	9:01p
fgw5_L.173.o	521,448	06/16/2000	12:54p
fgw5_L.25.o	520,337	06/16/2000	12:22p
fgw5_L.5.o	521,013	06/16/2000	12:15p
fgw5_L.75.o	520,612	06/16/2000	1:06p
fgw5_L.9.o	520,643	06/16/2000	2:26p
fgw5_L1.1.o	522,072	06/16/2000	1:25p
fgw5_L1.25.o	520,546	06/16/2000	1:52p
fgw5_L1.5.o	521,761	06/16/2000	1:11p
fgwd6L.63.o	524,234	06/15/2000	2:54p
fgwd6L.63a.o	522,891	06/15/2000	5:44p
fgwd6L.75.o	524,509	06/15/2000	4:06p
fgwd6L.9.o	524,663	06/15/2000	5:15p
fgwd6L1.1.o	523,721	06/15/2000	3:28p
fgwd6L1.25.o	523,475	06/15/2000	3:03p
fgwd6L1.5.o	523,746	06/15/2000	3:48p
Directory of D:\outputs\table22			
allha.o	552,817	06/27/2000	10:49a
hm1x1_cya.o	498,070	06/22/2000	2:16p
hm1x1_hxa.o	497,547	06/22/2000	12:15p
hm1x4_hxa.o	509,160	06/22/2000	11:19a
hm2d_cya.o	508,445	06/30/2000	12:25p
hm2d_cyb.o	508,445	06/30/2000	1:57p
hm2d_hxa.o	508,356	06/29/2000	3:44p
hm2d_hxb-.o	507,827	06/30/2000	12:52p
hm2d_hxb.o	509,292	06/30/2000	1:13p
hm3d_hxa.o	523,869	06/22/2000	7:14p
hmalh_hxa.o	498,273	06/27/2000	12:34p

File Name /Directory Name	Size (bytes)	Date of Last Access	Time of Last Access
htalh_r0.o	522,971	07/13/2000	10:23p
htalh_r1.o	524,907	07/13/2000	4:03p
htalh_r2.o	524,148	07/13/2000	1:25p
htalh_r3.o	524,524	07/13/2000	6:05p
htalh_rm1.o	522,913	07/13/2000	7:43p

NOTE: N/A=directory

Attachment III

Table III-1. List of Worksheets in Excel Spreadsheet "fuel_mass.xls" Contained on the Electronic Media (Attachment IV)

Worksheet Name	Description	Used in Table
atwt	Contains atomic weights for isotopes and elements and decay constants for selected actinides.	All tables
sheet2	Calculate number densities for nonfuel materials, HLW glass, prebreach and post-breach clay	All tables
sheet1	Calculate number densities for intact Shippingport LWBR fuel	Tables 6-1 through 6-3, 6-5, 6-10, 6-11, 6-17, 6-20
sheet3	Calculate number densities and layer thicknesses for degraded cases	Tables 6-4, 6-6, 6-12 through 6-14
sheet4	Calculate number densities and layer thicknesses for degraded cases	Tables 6-7 through 6-9, 6-14, 6-15, 6-16, 6-18, 6-19, 6-20
decay	Calculates fuel number densities to account for radioactive decay due to the passage of time	Table 6-21
homog	Calculates number densities, masses and volumes to be used in the homogeneous representation of the intact seed assembly	Table 6-22

The Excel file is named "fuel_mass.xls", it was last accessed on 09/08/2000, 2:50 pm and its size is 1,532,416 bytes.

The worksheets included in this file contain all calculations performed to transform the input data presented in Section 5 into data that are directly used for constructing the input files for MCNP code. Following the requirements of the MCNP code, the input data need to cover a full description of the geometry and composition of the system that is analyzed.

The worksheets are organized in a logical way, which follows the postulated degraded configurations anticipated for the codisposal WP containing Shippingport LWBR SNF and the assumptions used to construct them.

The first worksheet developed, entitled "atwt," contains a comprehensive list of atomic weights for isotopes and elements that are taken from Ref. 10 and 12. It also contains a list of the decay constants from Ref. 12. The input data have been verified individually against the references. The worksheet also uses two Excel built-in functions that can simplify the retrieval of data for further use in the other worksheets. The functions are tested randomly at the bottom of the worksheet and the examples of use are listed. The functions are labeled and clearly identified.

The next worksheet developed for this calculation is entitled "sheet2". It calculates the atomic densities for all materials presented in Section 5.1. The formulas used for calculating the atomic densities are presented in Section 5.2 and also in the annotations of the worksheet. The atomic weights for the isotopes and elements are retrieved from spreadsheet "atwt" using the above mentioned built-in functions. The formula used for calculated atomic density is clearly identified

and its range of application is not limited. The formula is labeled and has been checked individually for each use.

The first portion of worksheet "sheet1' calculates the mass and number densities of the intact fuel rods. Additional calculations determine the number of each type of fuel pin in the intact fuel assembly and the axial distribution of fuel in the assembly. Volumes for the assembly, canister, fuel pins, canister and basket assembly are determined. The compositions of the aluminum fill material for various weight percentages of gadolinium are determined. Since the steel and aluminum degrade to goethite and diaspore, respectively, number densities are determined for use in cases where diaspore and goethite are produced. The intact number densities for the fuel are used in cases that are given in Tables 6-1 through 6-16. Most of the remainder of worksheet "sheet1" includes the calculations performed for describing the geometry and atomic densities for the mixtures resulted after partial degradation of some of the constituents. It includes calculations for variable Gd contents in the fill material and also different water content in various volumes in different layers. The last set of calculations presented in worksheet "sheet1" determines the number densities for cases where the fuel became axially redistributed in the canister. These are variations of cases in Table 6-17, and the results are used for the cases included in Table 6-20. The main formulas used in the worksheet are clearly identified and presented in annotations at the bottom of the spreadsheet. Each formula is labeled at the beginning of the section in which it is used. All other mathematical manipulations of the input data are straightforward. The worksheet is divided in sections that address each set of MCNP cases developed. The correspondence is included explicitly for an easy identification. The formulas have been verified independently by performing a hand calculation in parallel with the Excel software.

Worksheet "sheet3" presents calculations for cases where the assembly and canister are intact, but other components in the canister have degraded. The results from these calculations are used for the cases presented in Tables 6-4 and 6-6. Additional calculations are for cases that treat loose fuel pins in the basket assembly and the results are used for the cases given in Table 6-12. The final set of calculations are for cases that treat loose fuel pins in the DOE SNF canister but the other contents of the canister have degraded. The results from these calculations are used in cases given in Tables 6-13 and 6-14. The calculations in these worksheets determine the volumes, number densities and thickness for the layers of various mixtures of materials that are possible for each of these scenarios. The formulas used are very similar to the ones used in worksheet "sheet1". The main formulas used in the worksheet are clearly identified and presented in annotations at the bottom of the spreadsheet. Each formula is labeled at the beginning of the section in which it is used. The formulas have been verified independently by performing a hand calculation in parallel with the Excel software.

The first set of calculations presented in worksheet "sheet4" are for an intact assembly in the WP with the canister, its contents and the contents of the WP fully degraded. The calculations were used in preparing the input files for the cases presented in Tables 6-7, 6-8 and 6-9. The first two tables assume the WP contains prebreach clay that mixes with the degradation products from the

canister, while the last table assumes the WP contains post-breach clay. Additional calculations are for the cases where the WP contains loose fuel pins and contains either post-breach clay or a mixture of prebreach clay and degradation products from the canister and its contents. These results are for the cases presented in Tables 6-15 and 6-16. The last set of calculations is for the case where the fuel assembly, the canister, its contents and the contents of the WP are fully degraded. These cases are similar to those presented in worksheet "sheet1" except that the mixtures are in the WP rather than canister. These results are for the cases presented in Table 6-18 and 6-19 where the WP contains prebreach clay mixed with degradation products (from the canister) and post-breach clay, respectively. The final calculations are for cases where the WP contains degraded fuel and materials and the contents become redistributed in the axial direction. These calculations are used for the input files that are mentioned in Table 6-20. Calculations in this worksheet are used to determine the volume, number densities, and thickness of the materials that make up the various layers for these different cases.

Worksheet "decay" is used to calculate the changes in number densities due to radioactive decay after the passage of large periods of time for intact fuel. The decay constants are determined in worksheet "atwt" and built in Excel functions are used to "transfer" these constants. The calculations are used to obtain the results that are presented in Table 6-21.

Worksheet "homog" is used to calculate volumes and number densities that are used for the homogeneous model of the intact fuel assembly. Volumes for the various components that make up the intact assembly are determined, then equivalent volumes are determined for the homogeneous equivalents. Number densities are also taken from worksheets "sheet1" and "sheet2," and are used in these calculations. These calculations are used to obtain the results that are presented in Table 6-22.