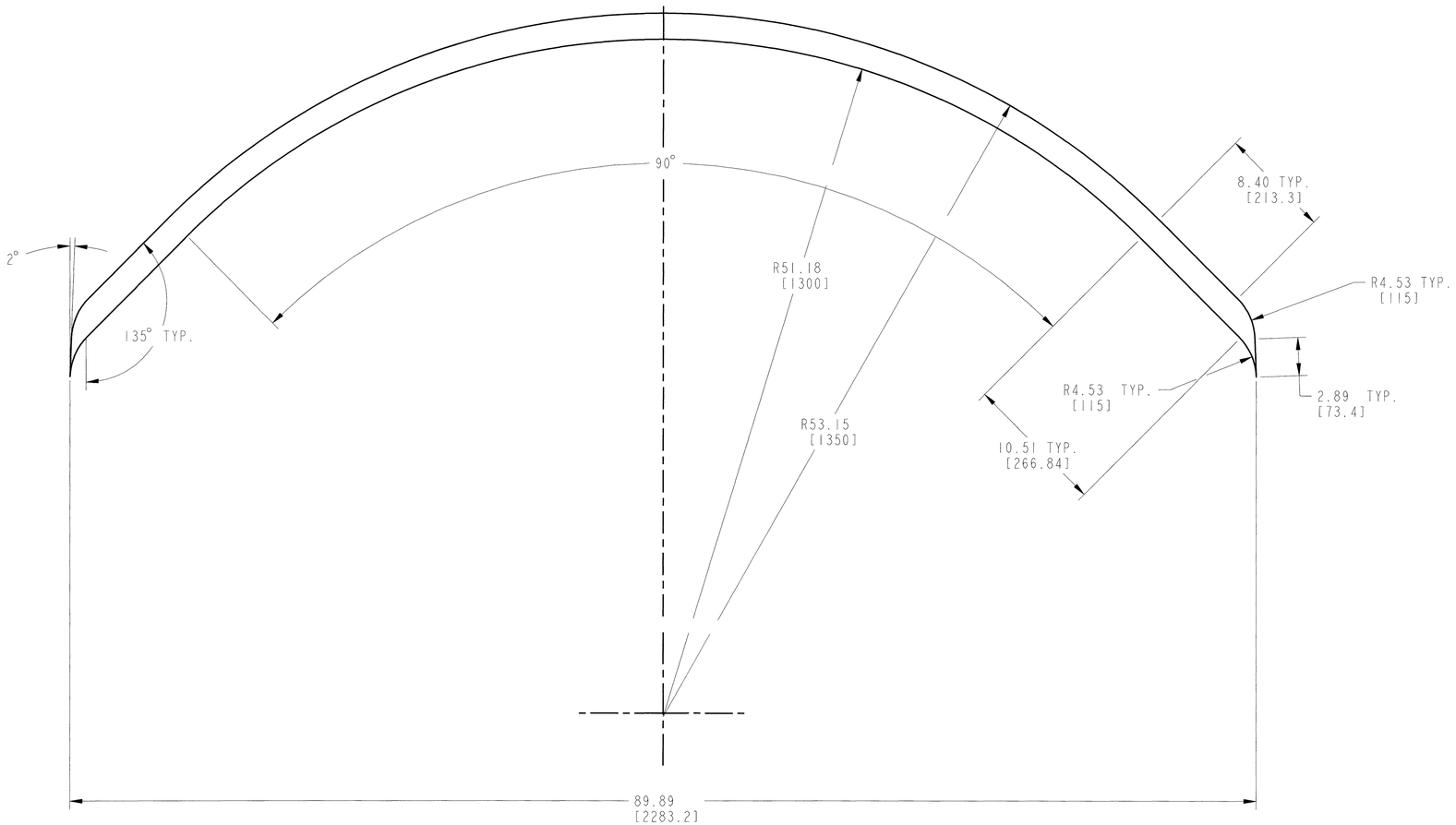


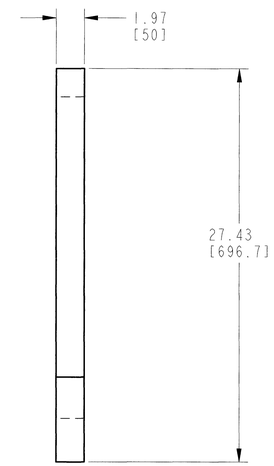


MATERIAL: SB-265 R52400
2 REQUIRED

NOTES:

1. ALL DIMENSIONS ARE IN INCHES MILLIMETERS ARE IN BRACKETS.
2. ALL DIMENSIONS ARE REFERENCE ONLY.
3. DO NOT SCALE FROM DRAWING.
4. THE DRIP SHIELD IS CLASSIFIED AS A SAFETY CATEGORY ITEM SUBJECT TO THE REQUIREMENTS OF THE QARD.

THIS DRAWING IS PRELIMINARY AND NOT INTENDED FOR CONSTRUCTION, PROCUREMENT OR FABRICATION.

DESIGN INPUTS
SEE DOCUMENT INPUT REFERENCE SYSTEM (DIRS)

| REV | DESCRIPTION | DATE | DRN | ORG | CHK | VER | EGS DLE | QER | PE |
|---|---|---|---|---|---|---|---|---|---|
| 00A | INITIAL ISSUE | 3/4/04 | [signature] | Z.C. | T.D. | N/A | AKS | JEC | [signature] |

| APPROVALS | INITIAL/DATE |
|---|---|
| DRAWN G. GOODSELL | [signature] 3-4-04 |
| ORIGINATOR Z. CEYLAN | Z.C. 3/4/04 |
| CHECKED T. DEBUES | T.D. 3/4/04 |
| VERIFICATION N/A | |
| DESIGN LEAD ENGINEER A. SCHEIDER | AKS MAR 09, 2004 |
| QUALITY ENGINEERING REP J. E. CLARK | JEC 3/4/04 |
| PROJECT ENGINEER C. CHAGNON | C. LINDEN FOR [signature] 3/4/04 |

**U.S. DEPARTMENT OF ENERGY**
Yucca Mountain Site Characterization Project
BECHTEL SAIC COMPANY, LLC — Civilian Radioactive Waste Management System MANAGEMENT & OPERATING CONTRACTOR

DESIGN AND ENGINEERING
DRIP SHIELD
CONNECTOR GUIDE

| SIZE | SCALE | DOCUMENT IDENTIFIER: | REV |
|---|---|---|---|
| D | NONE | 000-M00-SSE0-02001-000-00A | |
| SAFETY CATEGORY: AS NOTED | | CAD FILE: DS_CNCTR_GUIDE.DWG. | SHEET 1 OF 1 |

CAGE CODE:

RECORD DESIGNATOR QA:QA

SIZE D DOCUMENT IDENTIFIER: 000-M00-SSE0-02001-000-00A REV