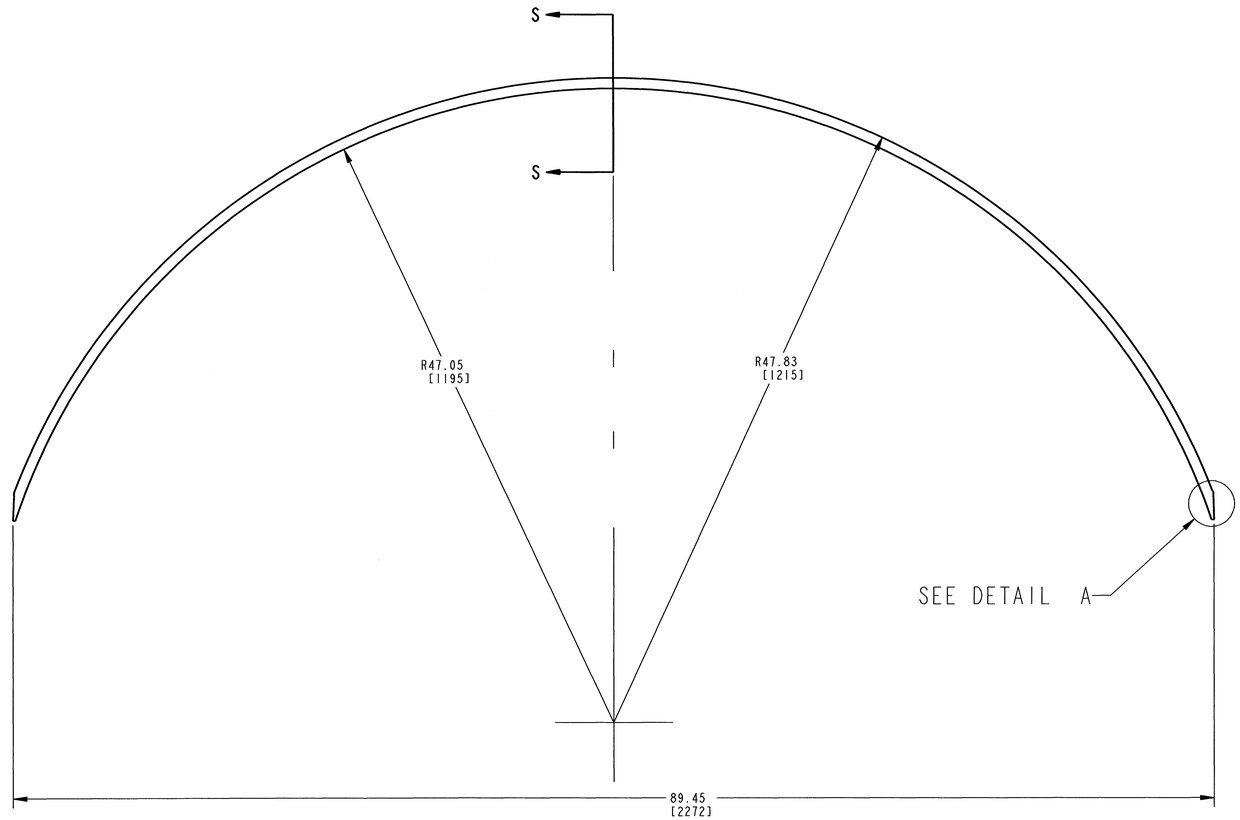

MATERIAL: SB-265 (UNS R56404)
8 REQUIRED

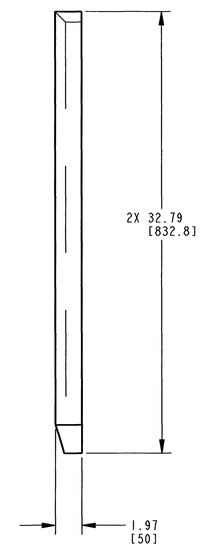

NOTES:

1. ALL DIMENSIONS ARE IN INCHES
   MILLIMETERS ARE IN BRACKETS.
2. ALL DIMENSIONS ARE REFERENCE ONLY.
3. DO NOT SCALE FROM DRAWING.
4. THE DRIP SHIELD IS CLASSIFIED AS IMPORTANT TO WASTE ISOLATION (ITWI).

DESIGN INPUT REFERENCE LIST

BASIS OF DESIGN FOR THE TAD CANISTER-BASED REPOSITORY DESIGN CONCEPT 000-3DR-MGR0-00300-000-000.

REFERENCE DRAWINGS

000-M00-SSE0-00101-000	INTERLOCKING DRIP SHIELD CONFIGURATION
000-M00-SSE0-00102-000	INTERLOCKING DRIP SHIELD CONFIGURATION
000-M00-SSE0-00103-000	INTERLOCKING DRIP SHIELD CONFIGURATION

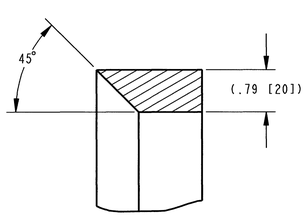

SECTION S-S
SCALE 3/4

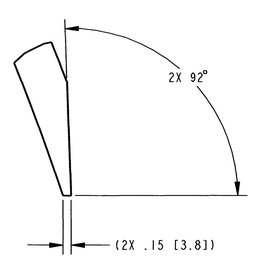

DETAIL A
SCALE 3/4

THIS DRAWING IS PRELIMINARY AND NOT INTENDED FOR CONSTRUCTION, PROCUREMENT OR FABRICATION.

REV	DESCRIPTION	DATE	ORG	CHK	EGS	PE	DEM	QE
00B	EXTENSIVE REVISION - CHANGED MATERIAL FROM SB-265 (UNS R56405) TO SB-265 (UNS R56404) PER TWRB-2006-004. UPDATED DIMENSIONS TO CONFORM WITH CURRENT DRAFTING STANDARDS. REMOVED EXTRA DIMENSIONS. REVISED NOTE 4. ADDED DESIGN INPUT REFERENCE LIST. ADDED REFERENCE DRAWINGS.	4/25/07	[illegible]	[illegible]	[illegible]	[illegible]	N/A	[illegible]
00A	INITIAL ISSUE	3/3/04	ZC	TD	AS	CC	N/A	JH

REVISION HISTORY

APPROVALS	INITIAL/DATE
ORIGINATOR Z. CEYLAN	ZC 3/3/04
CHECKER T. DEBUES	TD 3/3/04
ENGINEERING GROUP SUPERVISOR A. SCHEIDER	AS 3/3/04
PROJECT ENGINEER C. CHAGNON	CC 3/3/04
DISCIPLINE ENGINEERING MANAGER N/A	N/A
QE CONCURRENCE J. HEANEY	JH 3/3/04

U.S. DEPARTMENT OF ENERGY
Office of Civilian Radioactive Waste Management
BECHTEL SAIC COMPANY, LLC Management and Operation of the Office of Civilian Radioactive Waste Management Program

DRIP SHIELD
BULKHEAD FLANGE

SAFETY CLASSIFICATION	DOCUMENT IDENTIFIER:		
AS NOTED	000-M00-SSE0-01601-000		
SIZE: D	SCALE: NONE	CAD FILE: 000-M00-SSE0-01601-000.DRW	REV: 00B

CAGE CODE:

RECORD DESIGNATOR QA:QA