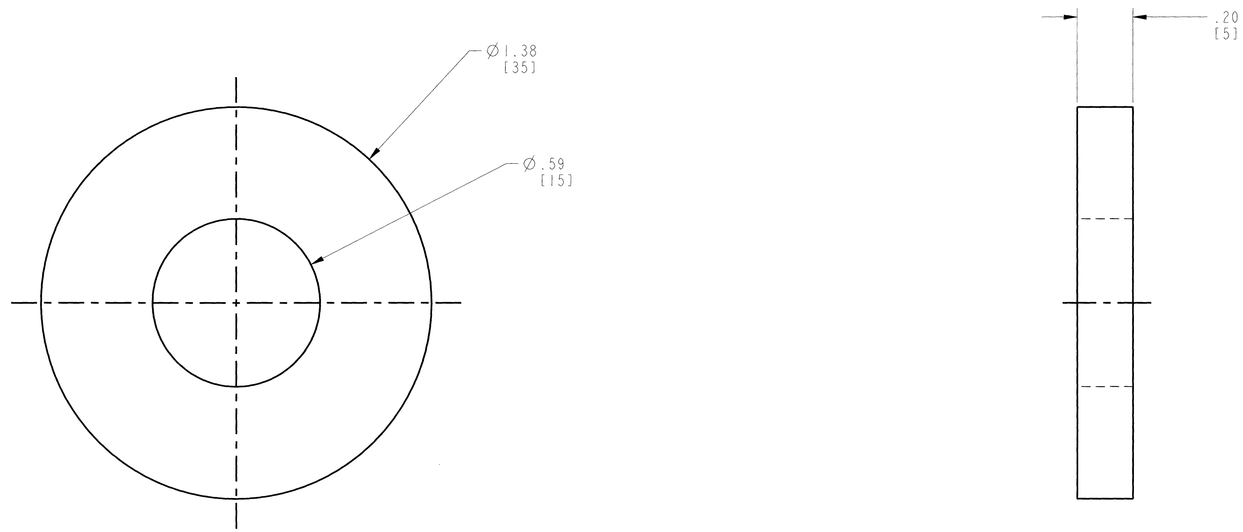

MATERIAL: SB-575 N06022
20 REQUIRED

NOTES:

1. ALL DIMENSIONS ARE IN INCHES MILLIMETERS ARE IN BRACKETS.
2. ALL DIMENSIONS ARE REFERENCE ONLY.
3. DO NOT SCALE FROM DRAWING.
4. THE DRIP SHIELD IS CLASSIFIED AS A SAFETY CATEGORY ITEM SUBJECT TO THE REQUIREMENTS OF THE QARD.

THIS DRAWING IS PRELIMINARY AND NOT INTENDED FOR CONSTRUCTION, PROCUREMENT OR FABRICATION.

DESIGN INPUTS
SEE DOCUMENT INPUT REFERENCE SYSTEM (DIRS)

REV	DESCRIPTION	DATE	DRN	ORG	CHK	VER	EGS DIE	QER	PE
00A	INITIAL ISSUE	3/3/04	[signature]	Z.C.	[signature]	N/A	[signature]	[signature]	[signature]

APPROVALS	INITIAL/DATE
DRAWN G. GOODSELL	[signature] 3-3-04
ORIGINATOR Z. CEYLAN	Z.C. 3/3/04
CHECKED M. LEWIS	[signature] 03/03/04
VERIFICATION N/A	
DESIGN LEAD ENGINEER A. SCHEIDER	[signature] MAR 03, 2004
QUALITY ENGINEERING REP J. HEANEY	[signature] 3/3/04
PROJECT ENGINEER C. CHAGNON	C. LINDEN FOR [signature] 3/3/04

U.S. DEPARTMENT OF ENERGY
Yucca Mountain Site Characterization Project
BECHTEL SAIC COMPANY, LLC Civilian Radioactive Waste Management System MANAGEMENT & OPERATING CONTRACTOR

DESIGN AND ENGINEERING

DRIP SHIELD
STABILIZATION PIN WASHER

SIZE	SCALE	DOCUMENT IDENTIFIER:	REV
D	NONE	000-M00-SSE0-01001-000-00A	

QA CLASSIFICATION	CAD FILE	SHEET
AS NOTED	DS_STBZN-PIN-WSHR.DWG.	1 OF 1

CAGE CODE:

RECORD DESIGNATOR QA:QA