Nuclear Operating Company

South Texas Project Electric Generating Station 4000 Avenue F – Suite A Bay City, Texas 77414

August 6, 2009
U7-C-STP-NRC-090096

U. S. Nuclear Regulatory Commission
Attention: Document Control Desk
One White Flint North
11555 Rockville Pike
Rockville MD 20852-2738

South Texas Project
Units 3 and 4
Docket Nos. 52-012 and 52-013
Response to Request for Additional Information

Attached are the responses to the NRC staff questions included in Request for Additional Information (RAI) letter numbers 148 and 151 related to Combined License Application (COLA) Part 2, Tier 2, Subsections 3.2.1 and 3.5.1.5, respectively. This submittal completes the responses to these RAI letters.

The attachments address the responses to the RAI questions listed below:

RAI 03.02.01-1
RAI 03.02.01-2
RAI 03.02.01-3
RAI 03.02.01-4
RAI 03.02.01-5
RAI 03.02.01-6
RAI 03.05.01.05-1

When a change to the COLA is indicated, it will be incorporated in the next routine revision of the COLA following the NRC acceptance of the RAI response.

There are no commitments in this letter.

If you have any questions, please contact me at (361) 972-7136, or Bill Mookhoek at (361) 972-7274.

D091
NRO

STI 32514743

I declare under penalty of perjury that the foregoing is true and correct.

Executed on 8/6/09

Scott Head
Manager, Regulatory Affairs
South Texas Project Units 3 & 4

jep

Attachments:

1. RAI 03.02.01-1
2. RAI 03.02.01-2
3. RAI 03.02.01-3
4. RAI 03.02.01-4
5. RAI 03.02.01-5
6. RAI 03.02.01-6
7. RAI 03.05.01.05-1

cc: w/o attachment except*
(paper copy)

Director, Office of New Reactors
U. S. Nuclear Regulatory Commission
One White Flint North
11555 Rockville Pike
Rockville, MD 20852-2738

Regional Administrator, Region IV
U. S. Nuclear Regulatory Commission
611 Ryan Plaza Drive, Suite 400
Arlington, Texas 76011-8064

Kathy C. Perkins, RN, MBA
Assistant Commissioner
Division for Regulatory Services
Texas Department of State Health Services
P. O. Box 149347
Austin, Texas 78714-9347

Alice Hamilton Rogers, P.E.
Inspections Unit Manager
Texas Department of State Health Services
P.O. Box 149347
Austin, TX 87814-9347

C. M. Canady
City of Austin
Electric Utility Department
721 Barton Springs Road
Austin, TX 78704

*Steven P. Frantz, Esquire
A. H. Gutterman, Esquire
Morgan, Lewis & Bockius LLP
1111 Pennsylvania Ave. NW
Washington D.C. 20004

*George F. Wunder
*Tom Tai
Two White Flint North
11545 Rockville Pike
Rockville, MD 20852

(electronic copy)

*George Wunder
*Tom Tai
Loren R. Plisco
U. S. Nuclear Regulatory Commission

Steve Winn
Eddy Daniels
Joseph Kiwak
Nuclear Innovation North America

Jon C. Wood, Esquire
Cox Smith Matthews

J. J. Nesrsta
R. K. Temple
Kevin Pollo
L. D. Blaylock
CPS Energy

RAI 03.02.01-1

QUESTION:

STD DEP T1 2.15-1 changes the seismic classification of the Radwaste Building substructure from Seismic Category I to be consistent with the entire Radwaste Building and references RG 1.143. COLA Table 1.9S-1 identifies conformance with RG 1.143 Rev. 2. Although RG 1.143 is the standard regulatory position for the classification and design of structures that house radioactive waste management systems, the applicant has not included the technical justification for the departure from the design certification. Clarify why the seismic classification of the radwaste building substructure was revised from Seismic Category I and why the classification according to RG 1.143 is appropriate and justified.

RESPONSE:

The classification of the Radwaste Building substructure was revised based on the following reasons:

(a) Radwaste Building does not house any safety related systems or components.

(b) Regulatory Guide 1.29, Seismic Design Classification, refers to the use of Regulatory Guide 1.143 for design of radioactive waste management systems.

(c) Regulatory Guide 1.143 provides detailed requirements for design of radioactive waste management systems, structures, and components.

(d) Departure STD DEP T1 2.15-1 commits to the use of Regulatory Guide 1.143 for the design of radioactive waste management systems, structures, and components.

(e) Subsection 3.8.4 of NUREG-1503 (ABWR Final Safety Evaluation Report) states, "Because GE elected to design the radwaste building substructure to remain structurally intact during an SSE to help contain liquid from a possibly ruptured tank, the radwaste building substructure also is included in this safety evaluation, although it does not house any safety-related systems and components, and hence, is not seismic Category I."

The technical justification for this departure is provided in COLA Part 7, Section 2.1. No COLA change is required as a result of this response.

RAI 03.02.01-2

QUESTION:

The applicant is expected to identify site-specific SSCs that are not included in the DCD. The reactor service water (RSW) system outside the control building and the firewater pump house are outside the scope of the ABWR DCD. SSCs such as the RSW pumps, RSW pump house and firewater pump house are not included in Table 3.2-1 of the COL FSAR. Staff request that the applicant review the COLA for completeness to identify any site-specific SSCs that have not been seismically classified and update the FSAR.

RESPONSE:

COLA Part 2, Tier 2, Table 3.2-1 will be updated as marked below and will be provided in a future COLA update. The COLA Part 2, Tier 2, Table 3.2-1 is provided below, with the changes from this RAI incorporated in it, in boxes and with gray highlighting.

Table 3.2-1 Classification Summary

The classification information is presented by System in the following order:*

Item No.	*MPL Number†*	*Title*
C Control and Instrument Systems		
C7	*C71*	*Reactor* **Trip and Isolation**~~*Protection*~~ *System‡* **{1}**
C11	*C91*	~~*Process Computer (Includes PMCS and PGCS)*~~**Plant Information and Control System {1}**
C14	**C74**	**ESF Logic and Control System {1}**
H Control Panels		
~~*H6*~~	~~*H23*~~	~~*Multiplexing System*~~ **{1}**
N Power Cycle Systems		
N6.1	**N30**	**Turbine Supervisory System**
N17	*N42*	*Hydrogen Gas Cooling System*
N23	*N71*	*Circulating Water System*
P Station Auxiliary Systems		
P1	*P11*	*Makeup Water System (Purified)*
P8 **(See U16)**	*P40* **(See U80)**	*Ultimate Heat Sink* **(Ultimate Heat Sink and Associated Structures)**
P9	*P41*	*Reactor Service Water System*
P23	**P96**	**Vibration Monitoring System**
R Station Electrical Systems		
R16	*R51*	*Communication System*
S Power Transmission Systems		
S0	**S11**	**Main Power Transformer**
T Containment and Environmental Control Systems		
~~*T8*~~	~~*T49*~~	~~*Flammability Control System*~~ **{6}**
U Structures and Servicing Systems		
U0	**U10**	**Makeup Water Treatment Building**
U0.1	**U12**	**Sewage Treatment Building**
U0.2	**U14**	**Training Center/Simulator Building**
U0.3	**U15**	**Warehouses**
U1	*U21*	*Foundation Work*
U6	*U43*	*Fire Protection System*
U9.1	**U62**	**Waste Water Retention Basin**
U9.2	**U65**	**Low Level Radwaste Storage**
U12	*U73*/**U82**	*Control Building*‡**/Control Building Annex**
U13	*U74*	*Radwaste Building*

Table 3.2-1 Classification Summary

The classification information is presented by System in the following order:*

Item No.	*MPL Number†*	*Title*
U15	U79	Miscellaneous Buildings (e.g., Communications, Meteorology Lab)
U16 (See P8)	U80 (See P40)	Ultimate Heat Sink and Associated Structures
U17	U81	Firewater Pump House
U18	U90	Fire Detection System
U15 U19	U95	Hot Machine Shop
W Intake Structure and Servicing Equipment		
W1	W12	Power Cycle Heat Sink Pumphouse (Circulation Water Intake Structure
W2	W13	Circulation Water Discharge Structure
W3	W32	Screen Cleaning Facility
W4	W33	Screen
W5	W41	Reservoir Makeup Pumping Facility
Y Yard Structures and Equipment		
Y1.1	Y46	Cathodic Protection System
Y1.2	Y51	Yard Miscellaneous Drain System
Y2.1	Y53	Chemical Storage and Transfer Systems
Y2.2	Y71	Reactor Service Water Pipe Tunnel
Y2.3	Y72	Radwaste Pipe Tunnel

Table 3.2-1 Classification Summary (Continued)

Principal Component[a]		Safety Class[b]	Location[c]	Quality Group Classification[d]	Quality Assurance Requirement[e]	Seismic Category[f]	Notes
C7	*Reactor* **Trip and Isolation** ~~*Protection*~~ *System* **{1}**						
C11	~~*Process Computer (includes PMCS & PGCS)*~~ **Plant Information and Control System {1}**	N	X	—	E	—	
C14	**ESF Logic and Control System {1}**	**3**	**SC, X, T, RZ**	—	**B**	**I**	
D3	*Containment Atmospheric Monitoring System* **{6}**						
	2. Components with nonsafety-related function (hydrogen and oxygen monitors)	**N**	**C, SC, X, R, Z**	—	**E**	—	
E4	*RCIC System* **{7}**						
	2. ~~*Piping including supports—discharge line from vacuum pump to containment isolation valves, and discharge line from condensate pump to the first globe valve*~~**Not Used**	~~N~~	~~SC~~	~~C~~	~~E~~	—	~~(g)~~
	4. *RCIC* **Turbine-***Pump and piping including support, CST suction line from the first RCIC motorized valve, S/P suction line to the pump, discharge line up to the FW line "B" thermal sleeve*	2	SC, M	B	B	I	(g), **(m)**
	9. ~~*Turbine including supports*~~**Not Used**	~~2~~	~~SC~~	—	~~B~~	~~I~~	~~(m)~~
F1	*Fuel Servicing Equipment* **{3}**	~~N/2~~	SC	~~—/B~~	~~E/B~~	—	(x)
~~H6~~	~~*Multiplexing System*~~ **{1}**						
	~~1. Electrical module with~~	~~3~~	~~RZ,X~~	—	~~B~~	I	

Table 3.2-1 Classification Summary (Continued)

Principal Component[a]		Safety Class[b]	Location[c]	Quality Group Classification[d]	Quality Assurance Requirement[e]	Seismic Category[f]	Notes
	~~safety-related functions (Essential)~~						
	~~2. Cable with safetyrelated functions (Essential)~~	~~3~~	~~RZ,X~~	~~—~~	~~B~~	~~I~~	
	~~3. Other electrical modules and cables (Non-essential)~~	~~N~~	~~SC,RZ,X, W~~	~~—~~	~~E~~	~~—~~	
N6.1	**Turbine Supervisory System**	**N**	**T**	—	—	—	
N17	Hydrogen Gas Cooling System	N	T,**O**	—	E	—	
N23	Circulating Water System	N	T,**O**	D	E	—	
P1	Makeup Water System (Purified)						
	2. Piping including supports and valves	N	SC,RZ,T, H,W,X,**O**	D	E	—	
P8 **(See U16)**	Ultimate Heat Sink **(Ultimate Heat Sink and Associated Structures) UHS Basin, Cooling Tower Structural Elements, and RSW Pumphouse**	3	O,**U**	C,—	B	I	
P9	Reactor Service Water System						
	1. Safety-related piping including supports, piping and valves, **pumps and strainers**	3	U,O,X	C	B	I	
	2. Electrical modules and cables with safety-related functions, **including cooling tower fans, fan motors and controls**	3	RZ,U,O,X	—	B	I	
P19	Breathing Air System **{4}**	~~N~~	~~C,SC,T~~	~~—~~	~~E~~	~~—~~	
	1. Containment Isolation including supports, valves and piping	**2**	**C,SC**	**B**	**B**	**I**	

Table 3.2-1 Classification Summary (Continued)

Principal Component[a]		Safety Class[b]	Location[c]	Quality Group Classification[d]	Quality Assurance Requirement[e]	Seismic Category[f]	Notes
	2. Other mechanical and electrical components	**N**	**C,SC,RT, MCH**	—	**E**	—	
P23	**Vibration Monitoring System**	**N**	**C,O,RZ, SC,T,X,F, U,P**		**E/—**		
R5	*Metalclad Switchgear* **{2}**						
	1. Safety-related ~~6900~~ **4160** *Volt switchgear*	*3*	*RZ*	—	*B*	*I*	
R16	*Communication System*	*N*	*SC,C,RZ,* **X,O,H,T, M,W,F,U, P**		*B*	*I*	
S0	**Main Power Transformer**	**N**	**O**				
~~T8~~	***~~Flammability Control System~~*** **{6}**	***~~2~~***	***~~SC~~***	***~~B~~***	***~~B~~***	***~~I~~***	
U0	**Makeup Water Treatment Building**	**N**	**O**				
U0.1	**Sewage Treatment Building**	**N**	**O**				
U0.2	**Training Center/Simulator Building**	**N**	**O**				
U0.3	**Warehouses**	**N**	**O**				
U1	*Foundation Work*	*2/3*	*C,SC,RZ,* **U**		*B*	*I*	
U5	*Heating, Ventilation and Air Conditioning***						
	1. Safety-related equipment[ff]						
	a. Fan-coil cooling units	*3*	*SC,RZ,X,* **U**		*B*	*I*	
	b. Heating units—electrical or water	*3*	*SC,RZ,X,* **U**		*B*	*I*	
	c. Blowers—Air supply or	*3*	*SC,RZ,X,* **U**		*B*	*I*	
	d. Ductwork	*3*	*SC,RZ,X,* **U**		*B*	*I*	

Table 3.2-1 Classification Summary (Continued)

Principal Component[a]		Safety Class[b]	Location[c]	Quality Group Classification[d]	Quality Assurance Requirement[e]	Seismic Category[f]	Notes
	e. Filters—Equipment areas	3	SC,RZ,X, **U**	—	B	I	
	h. Other safety-related valves and dampers	3	RZ,X,**U**	—	B	I	
	i. Electrical modules with safety-related functions	3	SC,RZ,X, **U**	—	B	I	
	j. Cable with safety-related functions	3	SC,RZ,X, **U**	—	B	I	
U6	Fire Protection System						
	1. Other Piping including supports and valves	N	SC,X,RZ, H,T,W,O, **F,U,P**	D	E	—	(t) (u)
	5. Electrical Modules	N	SC,X,RZ, H,T,W,F, **U,P,O**	—	E	—	(t) (u)
	7. Cables	N	SC,X,RZ, H,T,W,F, **U,P,O**	—	E	—	(t) (u)
	8. Sprinklers or deluge water **systems**	N	H,W,SC, RZ,T,O,**X, U,P**	D	E	—	(t) (u)
	9. Foam reaction or deluge **water systems**	N	RZ,T,**O**	—	E	—	(t) (u)
U9.1	**Waste Water Retention Basin**	**N**	**O**	—	—	—	
U9.2	**Low Level Radwaste Storage**	**N**	**O**	—	**E**	—	**(p)**
U12	Control Building/**Control Building Annex**	3/**N**	X	—	B/**E**	I/—	
U13	***Radwaste Building* {5}**	**N**	**W**	—	**E**	—	(p)
	~~1. Structural Walls and slabs above grade level (see Subsection 3H.3.3)~~	~~N~~	~~W~~	—	~~E~~	—	
	~~2. Radwaste Building Substructure~~	~~3~~	~~W~~	—	~~B~~	~~I~~	

Table 3.2-1 Classification Summary (Continued)

Principal Component[a]		Safety Class[b]	Location[c]	Quality Group Classification[d]	Quality Assurance Requirement[e]	Seismic Category[f]	Notes
U15	Miscellaneous Buildings (e.g., Communications, Meteorology Lab)	N	O	—	—	—	
U16 (See P8)	Ultimate Heat Sink and Associated Structures						
U17	Firewater Pump House	N	F	—	E	—	(t) (u)
U18	Fire Detection System	N	All	—	E	—	(t) (u)
~~U15~~ U19	Hot Machine Shop	N	MCH	—	E	—	
W1	Power Cycle Heat Sink Pumphouse (Circulation Water Intake Structure)	N	P	—	—	—	
W2	Circulation Water Discharge Structure	N	O	—	—	—	
W3	Screen Cleaning Facility	N	O	—	—	—	
W4	Screen	N	O	—	—	—	
W5	Reservoir Makeup Pumping Facility	N	O	—	—	—	
Y1.1	Cathodic Protection System	N	O	—	—	—	
Y1.2	Yard Miscellaneous Drain System	N	O	—	—	—	
Y2.1	Chemical Storage and Transfer Systems	N	O	—	—	—	
Y2.2	Reactor Service Water Pipe Tunnel	3	O	—	B	I	
Y2.3	Radwaste Pipe Tunnel	N	O	—	E	—	(p)

Table 3.2-1 Notes and Footnotes

c. **MCH = Hot Machine Shop**
*X = Control Building/***Control Building Annex**
*U = Ultimate Heat Sink Pump House** **(Ultimate Heat Sink and Associated Structures)**
*P = Power Cycle Heat Sink Pump House** **(Turbine Service Water Pump House or Circulation Water Intake Structure)**
Pump House Structures are out of the ABWR Standard Plant Scope.* **The names in the parentheses are also used in the DCD, COLA, or site-specific MPL.

m. *The RCIC turbine* **and pump are designed and fabricated to ASME Code Section III.***~~is not included in the scope of standard codes. To assure that the turbine is fabricated to the standards commensurate with safety and performance requirements, General Electric has established specific design requirements for this component which are as follows:~~*

~~1. All welding shall be qualified in accordance with Section IX, ASME Boiler and Pressure Vessel Code.~~

~~2. All pressure-containing castings and fabrications shall be hydrotested at 1.5 times the design pressure.~~

~~3. All high-pressure castings shall be radiographed according to:~~
~~ASTM E-94~~
~~E-141~~
~~E-142 Maximum feasible volume~~
~~E-446, 186 or 280 Severity level 3~~

~~4. As-cast surfaces shall be magnetic-particle or liquid-penetrant tested according to ASME Code, Section III, Paragraphs NB-2545, NC-2545, or NB-2546, and NC-2546.~~

~~5. Wheel and shaft forgings shall be ultrasonically tested according to ASTM A-388.~~

~~6. Butt welds in forgings shall be radiographed and magnetic particle or liquid penetrant tested according to the ASME Boiler and Pressure Vessel Code, Section III Paragraph NB-2575, NC-2575, NB-2545, NC- 2545, NB-2546, NC-2546 respectively. Acceptance standards shall be in accordance with ASME Boiler and Pressure Vessel Code Section III, Paragraph NB-5320, NC-5320, NB-5340, NC-5340, NB-5350, NC-5350, respectively.~~

~~7. Notification shall be made on major repairs and records maintained thereof.~~

~~8. Record system and traceability shall be according to ASME Section III, NCA-4000.~~

~~9. Quality control and identification shall be according to ASME Section III, NCA-4000.~~

~~10. Authorized inspection procedures shall conform to ASME Section III, NB-5100 and NC-5100.~~

~~11. Non-destructive examination personnel shall be qualified and certified according to ASME Section III, NB-5500 and NC-5500.~~

x. *The cranes and ~~Safety Class 2~~* **{3}** *fuel servicing equipment are designed to hold up their loads and to maintain their positions over the units under conditions of SSE.*

RAI 03.02.01-3

QUESTION:

10 CFR 52.80(a) requires that a COL application contain the proposed inspections, tests, and analyses that the licensee should perform, and the acceptance criteria that are necessary and sufficient to provide reasonable assurance that, if the inspections, tests, and analyses are performed and the acceptance criteria met, the facility has been constructed and will operate in conformity with the combined license, the provisions of the Atomic Energy Act, and the NRC's regulations. STD DEP 9.3-2 classifies the breathing air system containment isolation including supports, valves and piping as Seismic Category I and safety-related; however, there is no ITAAC in the DCD or Part 9 of the COLA for the as-built breathing air containment isolation SSCs to ensure their meeting the seismic requirements. Add ITAAC in Table 3.0-12 of Part 9 of the FSAR to ensure that the Seismic Category I as-built SSCs will operate in conformity with the combined license and the NRC's regulations. Alternatively, clarify in the introduction section of Part 9 of the COLA that ITAAC verification methodology for basic configuration for SSCs outside the scope of the DCD will follow the verification methodology stated in DCD Tier 1, section 1.2.

RESPONSE:

The first ITAAC item in Table 3.0-12 of Part 9 of the COLA will be revised to ensure that the Seismic Category I as-built Breathing Air System (BAS) containment isolation SSCs, including supports, valves, and piping, will operate in conformity with the combined license and the NRC's regulations. The revised BAS ITAAC item is structured similarly to the corresponding Station Service Air System ITAAC provided in Table 2.11.11 of the ABWR DCD, Tier 1. Specifically, the revised BAS ITAAC specifies that the as-built BAS shall be verified to conform to the basic configuration shown in new Figure 3.0-2. This is appropriate since, as discussed in the response to RAI 03.02.01-5, the verification of basic configuration includes a verification that the identified Seismic Category I mechanical and electrical equipment (including the containment isolation valves) is qualified to withstand design basis dynamic loads.

To allow for implementation of the revised ITAAC item, new Figure 3.0-2 is added to COLA Part 9 to indicate the safety-related (ASME Code Class 2) component configuration associated with the BAS primary containment penetration. Markups indicating the revised ITAAC in Table 3.0-12 and new Figure 3.0-2 of Part 9 of the COLA are provided below.

While preparing this response, an inadvertent inconsistency was discovered in COLA Revision 2, Section 9.3.7.6.1.1 and Figure 9.3-10. Specifically, this FSAR section and figure describe the containment isolation scheme for the BAS primary containment penetration to include a check valve (Valve No. F252) located inside primary containment. This is contrary to STD DEP 9.3-2, which specifies a locked closed manual isolation valve inside primary containment rather than a check valve. As indicated in the markups provided below,

Section 9.3.7.6.1.1 and Figure 9.3-10 will be revised to correct this inadvertent inconsistency, and for completeness, to indicate the ASME code class (Class 2) to be applied to the safety-related components associated with the BAS primary containment penetration.

The changes indicated above are shown in the following markups. These markups will be incorporated into the next routine revision of the COLA following NRC acceptance of this RAI response.

COLA Part 9, Inspections, Tests, Analyses, Acceptance Criteria, Table 3.0-12

Table 3.0-12 Breathing Air System (BA)

Design Requirement	Inspections, Tests, Analyses	Acceptance Criteria
1. The ~~B~~basic configuration of the BAS is as shown on Figure 3.0-2.~~BA System containment penetration has one locked closed isolation valve inside and one locked closed isolation valve outside containment.~~	1. Inspections of the as-built system will be conducted.	1. The as-built BAS~~ System~~ conforms with the basic configuration shown on Figure 3.0-2~~containment penetration has one locked closed isolation valve inside and one locked closed isolation valve outside containment~~.

COLA Part 9, Inspections, Tests, Analyses, Acceptance Criteria, Figure 3.0-2 (New)

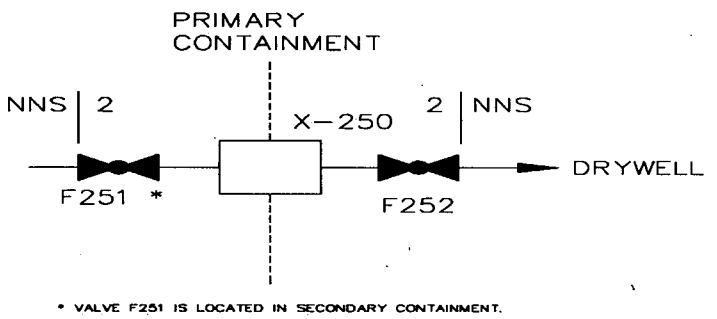

Figure 3.0-2 Breathing Air System Containment Isolation Configuration

COLA Part 2, Section 9.3.7.6.1.1

9.3.7.6.1.1 Safety Design Bases

The BAS is classified as non-safety related with the exception of the primary containment isolation function.

The primary containment penetration of the BAS ~~meets Seismic Category I requirements and~~ is equipped with a locked closed manual isolation valve outside and a locked closed manual isolation~~check~~ valve inside containment (GDC 56). The BAS primary containment penetration and associated isolation valves are designed to Seismic Category I, ASME Code, Section III, Class 2, Quality Group B and Quality Assurance B requirements.

COLA Part 2, Figure 9.3-10

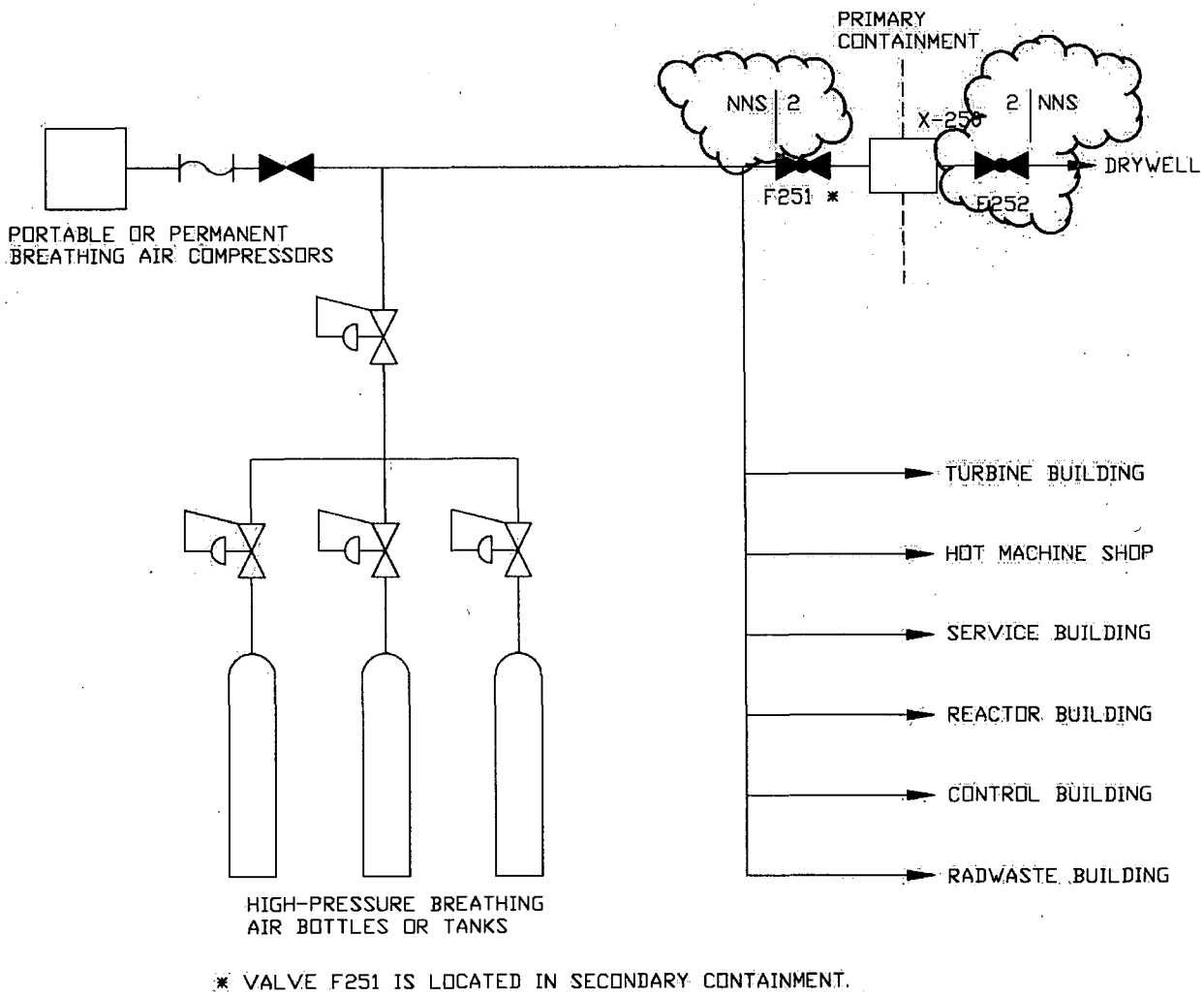

Figure 9.3-10 Breathing Air System Flow Diagram

RAI 03.02.01-4

QUESTION:

COL Item 3.22 states that the COL applicant will describe the process for completion of the design of balance-of-plant and non-safety-related systems to minimize II/I interactions and propose procedures for an inspection of the as-built plant for II/I interactions. However, there is no ITAAC in Part 9 of the FSAR to ensure that this COL item will be performed. Add ITAAC to ensure that the as-built nonsafetyrelated SSCs meet Regulatory Position C.4 of RG 1.29 which requires that the failure of nonsafetyrelated SSCs will not reduce the function of safety-related SSCs.

RESPONSE:

The reference ABWR DCD, Tier 2, Table 1.9-1, includes COL Information Item 3.22, Assessment of Interaction Due to Seismic Effects, and refers to DCD Tier 2, Subsection 3.7.5.4, which refers to Subsection 3.7.2.8. So, "II/I" interactions are as defined in DCD Subsection 3.7.2.8.

COLA Part 2, Tier 2, Subsection 3.7.5.4 describes the process to assess II/I interactions and development of procedures for inspection of the as-built plant for II/I interactions as part of the procedures of COLA Part 2, Tier 2 Section 13.5, Quality Assurance Program Description (QAPD), with commitment number COM 3.7-2. Thus, the commitment for the inspection for "II/I" interactions will be completed by performing the plant procedures of COLA Part 2, Tier 2, Section 13.5. As noted in the response to RAI 04.06-1 (ML091490166, dated May 26, 2009), COLA Part 2, Tier 2, Section 13.5 will be revised to include, "*The procedures that are identified in or required by the COL License Information Items in ABWR DCD, Tier 2, Table 1.9-1, will be incorporated into the plant procedures according to the following supplements, as applicable.*" Therefore, COL Information Item 3.22 is sufficient, and no ITAAC is necessary as discussed in the following.

It should be noted that the inspection for "II/I" interactions is not included in Reference ABWR DCD, Tier 1, Section 1.2, General Provisions for Design Descriptions and its associated ITAAC. Verifications for Basic Configuration for Systems do not identify the inspection for "II/I" interactions in their scope. This can be confirmed by the discussion in the Final Safety Evaluation Report (FSER), NUREG-1503, Page 14-39, which states the following:

> *"For non-seismic Category I SSCs, the need for ITAAC to verify that their failure will not impair the ability of nearby safety-related SSCs to perform their safety-related functions was assessed. Because the design detail and as-built and as-procured information for many non-safety-related systems (e.g., field-run piping and balance-of-plant systems) are not required for design certification and the spatial relationship between such systems and seismic Category I SSCs cannot be established until after the as-built design information is available, the non-seismic to seismic (II/I) interaction cannot be evaluated, until the plant has been constructed. Accordingly, the design criteria for ensuring acceptable II/I interactions and a commitment for the COL applicant to describe the process for completion*

of the design of balance-of-plant and non-safety related systems to minimize II/I interactions and proposed procedures for an inspection of the as-built plant for II/I interactions have been specified as a COL action item in the SSAR."

No COLA change is required as a result of this response.

RAI 03.02.01-5

QUESTION:

10 CFR 52.80(a) requires that a COL application contain the proposed inspections, tests, and analyses that the licensee should perform, and the acceptance criteria that are necessary and sufficient to provide reasonable assurance that, if the inspections, tests, and analyses are performed and the acceptance criteria met, the facility has been constructed and will operate in conformity with the combined license, the provisions of the Atomic Energy Act, and the NRC's regulations. The design of the reactor service water (RSW) system pumps is outside the scope of the DCD. There is no ITAAC listed in the DCD or Part 9 of the COLA to ensure that the safety-related as-built RSW pumps will remain functional during and after an SSE. Review the completeness of ITACC to include all Seismic Category I SSCs outside the scope of the DCD. Alternatively, clarify in the introduction section of Part 9 of the COLA that ITAAC verification methodology for basic configuration for SSCs outside the scope of the DCD will follow the verification methodology stated in DCD Tier 1, section 1.2.

RESPONSE:

COLA Part 9, Section 1.0, Introduction, *ITAAC for Site Specific Systems*, will be revised to state that the ITAAC verification methodology for basic configuration for SSCs outside the scope of the DCD will follow the verification methodology as stated in DCD Tier 1, Section 1.2. Note that this Tier 1 section is already incorporated by reference into the *Design Certification ITAAC* part of Introduction. As provided in DCD Tier 1, Section 1.2, the verification of basic configuration includes a verification that the Seismic Category I electrical and mechanical equipment identified in the design description are qualified to withstand design basis dynamic loads. The RSW pumps are shown in Figure 3.0-1 in COLA Part 9, which in turn is referenced in the basic configuration ITAAC in Table 3.0-5 of COLA Part 9. Therefore, the RSW ITAAC does include a provision to verify the RSW pumps will remain functional during and following a safe shutdown earthquake (SSE).

The changes to COLA Rev. 2 text in Part 9, ITAAC, Section 1.0, Introduction, will be provided in a future COLA update. The changes to COLA Rev. 2 text are shown below with gray highlighting:

ITAAC for Site Specific Systems

COLA Part 9, Section 3.0 identifies the ITAAC for the site-specific systems that must be satisfied. The ITAAC verification methodology for basic configuration for the site-specific SSCs will follow the verification methodology as stated in DCD Tier 1, Section 1.2.

RAI 03.02.01-6

QUESTION:

10 CFR Part 50, Appendix S, IV(a)(2)(I) states that SSCs necessary for continued operation without undue risk to the health and safety of the public must remain functional and within applicable stress, strain, and deformation limits when subject to the effects of the operating basis earthquake ground motion. NUREG-0800, SRP 3.2.1 states that, if the applicant has set the OBE ground motion to the value one-third of the SSE ground motion, then the applicant should also provide a list of SSCs necessary for continued operation that must remain functional without undue risk of the health and safety of the public and within applicable stress, strain and deformation, during and following the OBE. The ABWR design has elected to eliminate the OBE design requirement and set OBE ground motion to 1/3 of SSE ground motion.

10 CFR Part 50, Appendix S, IV(a)(3) states that if vibratory ground motion exceeding that of the operating basis earthquake ground motion or if significant plant damage occurs, the licensee must shut down the nuclear power plant, and that prior to resuming operations, the licensee must demonstrate to the Commission that no functional damage has occurred to those features necessary for continued operation without undue risk to the health and safety of the public and the licensing basis is maintained. Additionally, RG 1.166 provides guidance for evaluation of results obtained from a plant walkdown inspection after an earthquake. Listing the SSCs will allow the plant to address the requirements when the need exists. Provide this list of SSCs necessary for continued operation or an alternative to address the requirements.

RESPONSE:

The DCD, Tier 2, Subsection 3.7.5.2, titled, "Pre-Earthquake Planning and Post-Earthquake Actions" requires the COL applicant to submit to the NRC the procedures it plans to use for pre-earthquake planning and post-earthquake actions. This is COL Information Item 3.20 in Tier 2, Table 1.9-1. Subsection 3.7.5.2 states that the procedures shall follow the guidelines recommended in EPRI Report NP-6695. Section 4.3.4.1 of this report requires plants to develop a list of essential safe shutdown equipment, and guidelines are given for what to include; for example, decay heat removal system, including pumps and heat exchangers, condensate storage tanks, makeup water system, station emergency electrical systems (including EDGs, batteries, AC and DC buses, etc.).

In accordance with Subsection 3.7.5.2 of the COLA, the procedures for pre-earthquake planning and post-earthquake actions, which include a list of SSCs necessary for continued operation, will be developed in accordance with COLA Section 13.5, Quality Assurance Program Description (QAPD), prior to fuel load. Commitment number COM 3.7-1 is assigned. As noted in the response to RAI 04.06-1, COLA Section 13.5 will be revised to include, "*The procedures that are identified in or required by the COL License Information Items in ABWR DCD, Tier 2, Table 1.9-1, will be incorporated into the plant procedures according to the following supplements, as applicable.*" This assures that the commitment will be completed.

There are no COLA changes as a result of this RAI response, except for a correction of a typographical error by reinstating the deleted highlighted word "and," as follows:

3.7.5.2 Pre-Earthquake Planning and Post-Earthquake Actions

The following standard supplement addresses COL License Information Item 3.20.

The procedures for pre-earthquake planning and post-earthquake actions will be developed in accordance with Subsection 3.7.4 ~~and Reference 3.7-9~~ and Section 13.5 prior to fuel load. The procedures will implement the seismic instrumentation program specified in Subsection 3.7.4 and follow the guidelines recommended in EPRI Report NP-6695 (Reference 3.7-7), with the exceptions listed in Subsection 3.7.5.2 of the reference DCD. (COM 3.7-1)

RAI 03.05.01.05-1

QUESTION:

RG 1.206 provides guidance regarding the information needed to ensure potential hazards in the site vicinity are identified and evaluated to meet the siting criteria in 10 CFR 100.20 and 10 CFR 100.21. A postulated failure of a STP Unit 1 or 2 turbine could result in missiles representing an external hazard to the safe operation of STP Units 3 and 4; this has not been addressed in the STP Units 3 and 4 COL FSAR. Provide a discussion of the potential failure of a STP turbine at Unit 1 or 2 and address the potential turbine generated missile impacts on Units 3 and 4.

RESPONSE:

Standard Review Plan (SRP) Section 3.5.1.5 (NUREG-0800) addresses Site Proximity Missiles, which include possible turbine missiles from other units in the nearby facility. Impact of turbine missiles on the facility units themselves is discussed in SRP Section 3.5.1.3. That section of the SRP discusses differences in strike/damage probabilities for low trajectory missiles generated by favorably oriented turbines and those by unfavorably oriented turbines. That discussion is used as guidance in this response for the impact of proximity turbine missiles.

The generator ends of the turbines of the four units point to the North. But, Units 3 and 4 are located away from Units 1 and 2, approximately in the North-East direction. The shortest distance from the Unit 1 or Unit 2 turbine to the Unit 3 and Unit 4 safety-related systems is approximately 1,500 feet. Compare this with the shortest distance of approximately 300 feet from the Unit 3 or Unit 4 turbine to the safety related systems of the other unit. This arrangement of Unit 3 and Unit 4 relative to the Unit 1 or Unit 2 turbine can be considered favorable for low trajectory missiles. However, it is assumed conservatively unfavorable for this discussion, because no guidance is available in Regulatory Guide 1.115 or Standard Review Plan Section 3.5.1.3 based on distance. For damage consequences to safety-related systems after a missile is generated, due to an unfavorably oriented turbine generator, Acceptance Criterion 1B of SRP Section 3.5.1.3 provides a conservative acceptable value of 10^{-2} per year per plant for the product of missile strike probability P_2 and damage probability P_3.

To obtain the resulting probability of damage (P_4) from an event, the missile generation probability (P_1) is multiplied by the product of P_2 and P_3. If P_4, which is $P_1 \times P_2 \times P_3$, is less than 10^{-7} per year per plant, the SRP finds that damage probability for a plant to be acceptable. As discussed in the Safety Evaluation by the NRC for Units 1 and 2 (References 1 and 2, below), the estimated turbine rotor failure and missile generation probability P_1 is 7.7E-7 per year for the one month testing interval of turbine valves, and 1.1E-6 per year for the three month interval. The dominant contributor to turbine failure is destructive overspeed. The frequency of this type of failure is a function of the testing frequency of turbine valves. STPNOC performs the turbine stop valve and control testing quarterly. Using the commensurate value of P_1 = 1.1E-6, the resulting probability of damage for safety related systems at Units 3 and 4 from a turbine failure at Units 1 or 2, P_4 = (1.1E-6) x (1.0E-2) = 1.1 E-8. This is less than 10^{-7} per year per plant, and meets the acceptance criterion of SRP 3.5.1.3 for damage probability.

Therefore, the statement in the reference ABWR DCD Tier 2, Subsection 3.5.1.5, Site Proximity Missiles Except Aircraft, "External missiles other than those generated by tornados are not considered as a design basis (i.e. $< 10^{-7}$ per year)," is valid for a turbine missile from either Unit 1 or Unit 2 impacting Unit 3 and Unit 4.

References:

1. Letter from USNRC (Jaffe) to STPNOC (Sheppard), South Texas Project, Units 1 and 2, - Issuance of Amendments to Eliminate the Turbine Missile Design Basis, dated December 2, 2003. (ML033360481)
2. Letter from STPNOC (Sheppard) to USNRC (Document Control Desk), South Texas Project Units 1 & 2, Docket Nos. 50-498, 50-499, Proposed License Amendment to Eliminate the Turbine Missile Design Basis, dated November 14, 2002. (ML023240262)

No COLA change is required as a result of this response.