amec

Reviss R7021 Drop test Analysis

Images from analysis model – 22nd May 2009

Engineering Simulation team

Enclosure 3

Reviss R7021 Drop Test Analysis

OASYS D3PLOT: Drop 1 - 1.2m flat base (1.24m)

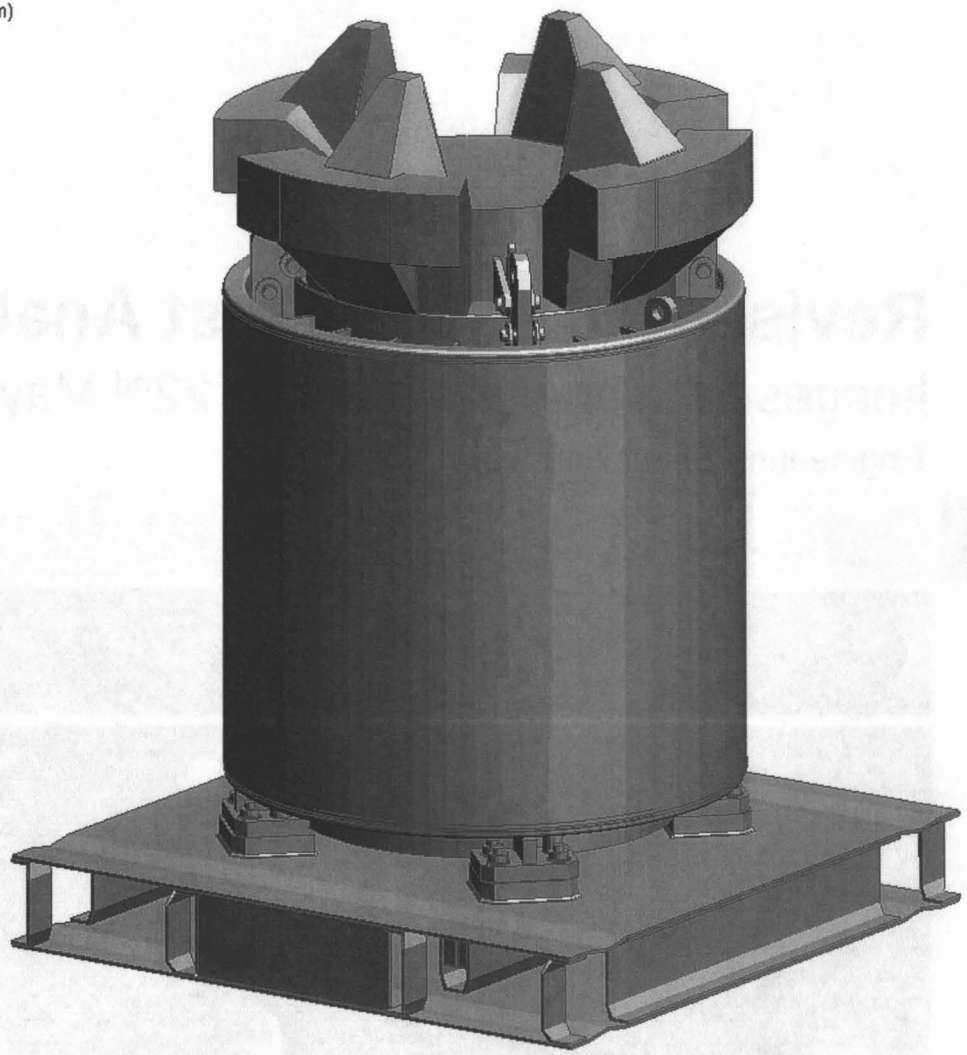

.000000000

Reviss R7021 Drop Test Analysis

OASYS D3PLOT: Drop 1 - 1.2m flat base (1.24m)

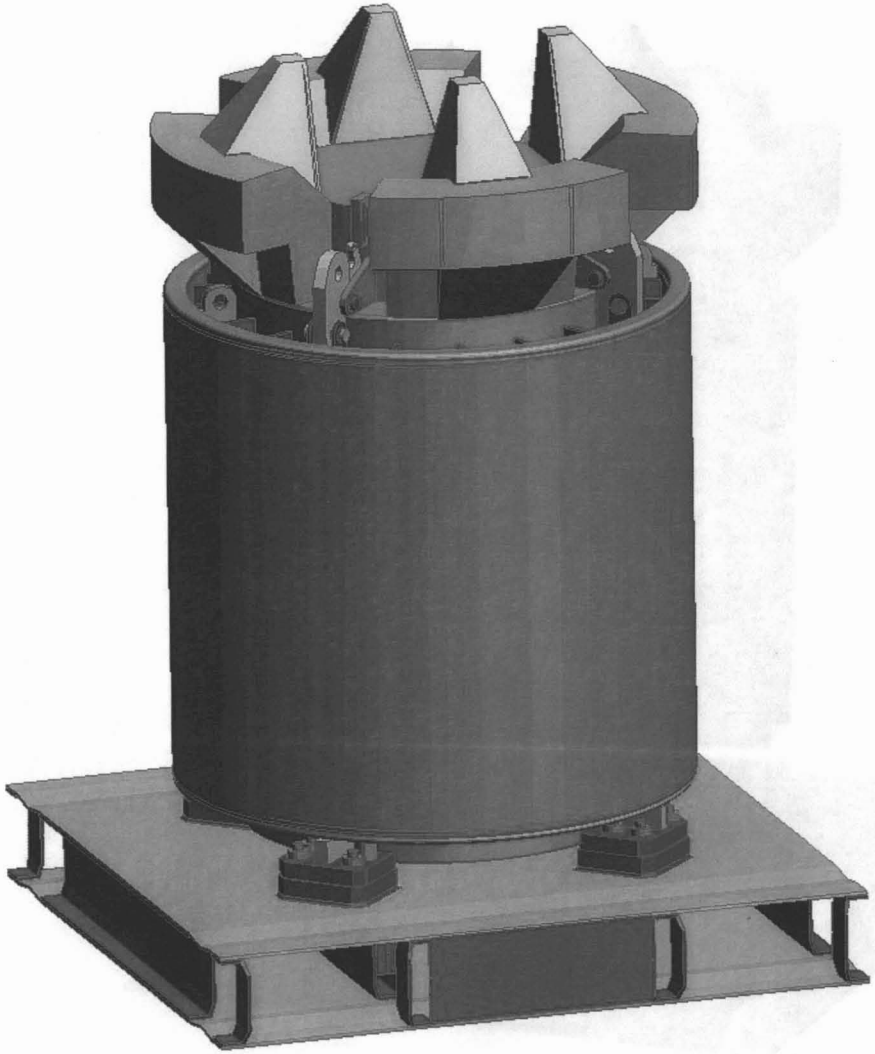

.000000000

Reviss R7021 Drop Test Analysis

OASYS D3PLOT: Drop 1 - 1.2m flat base (1.24m)

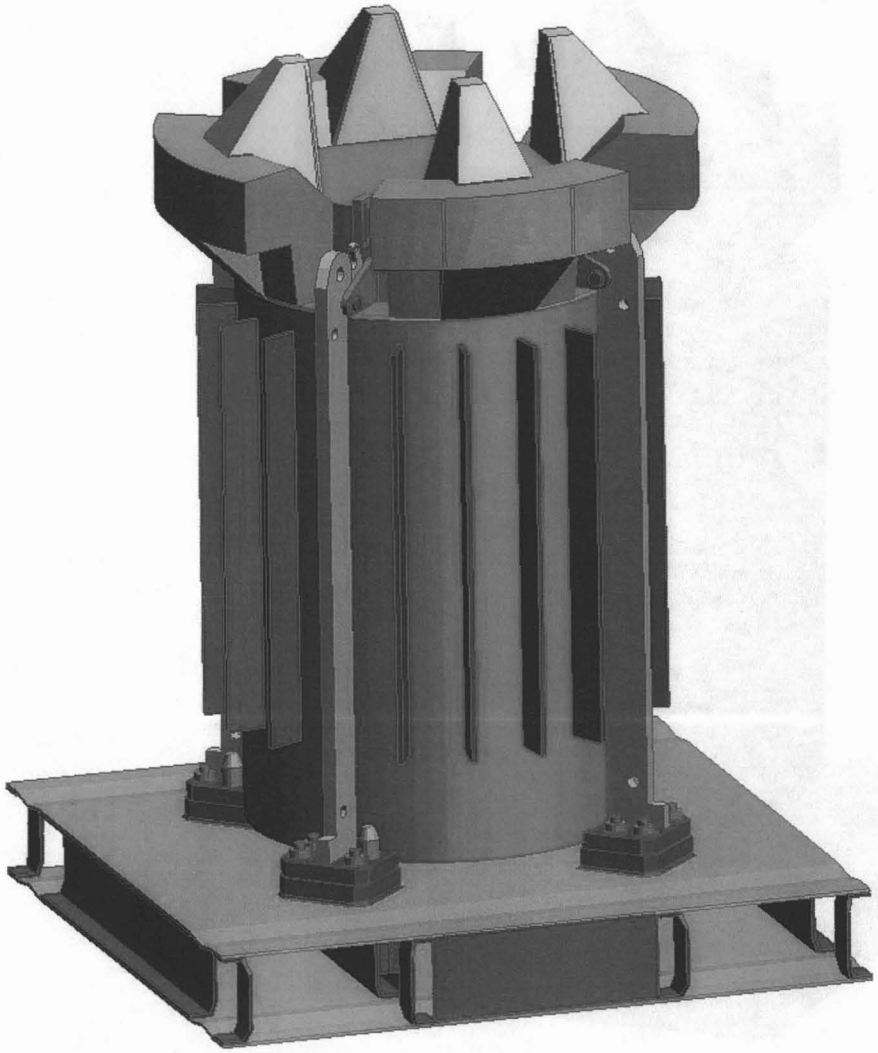

.000000000

Reviss R7021 Drop Test Analysis

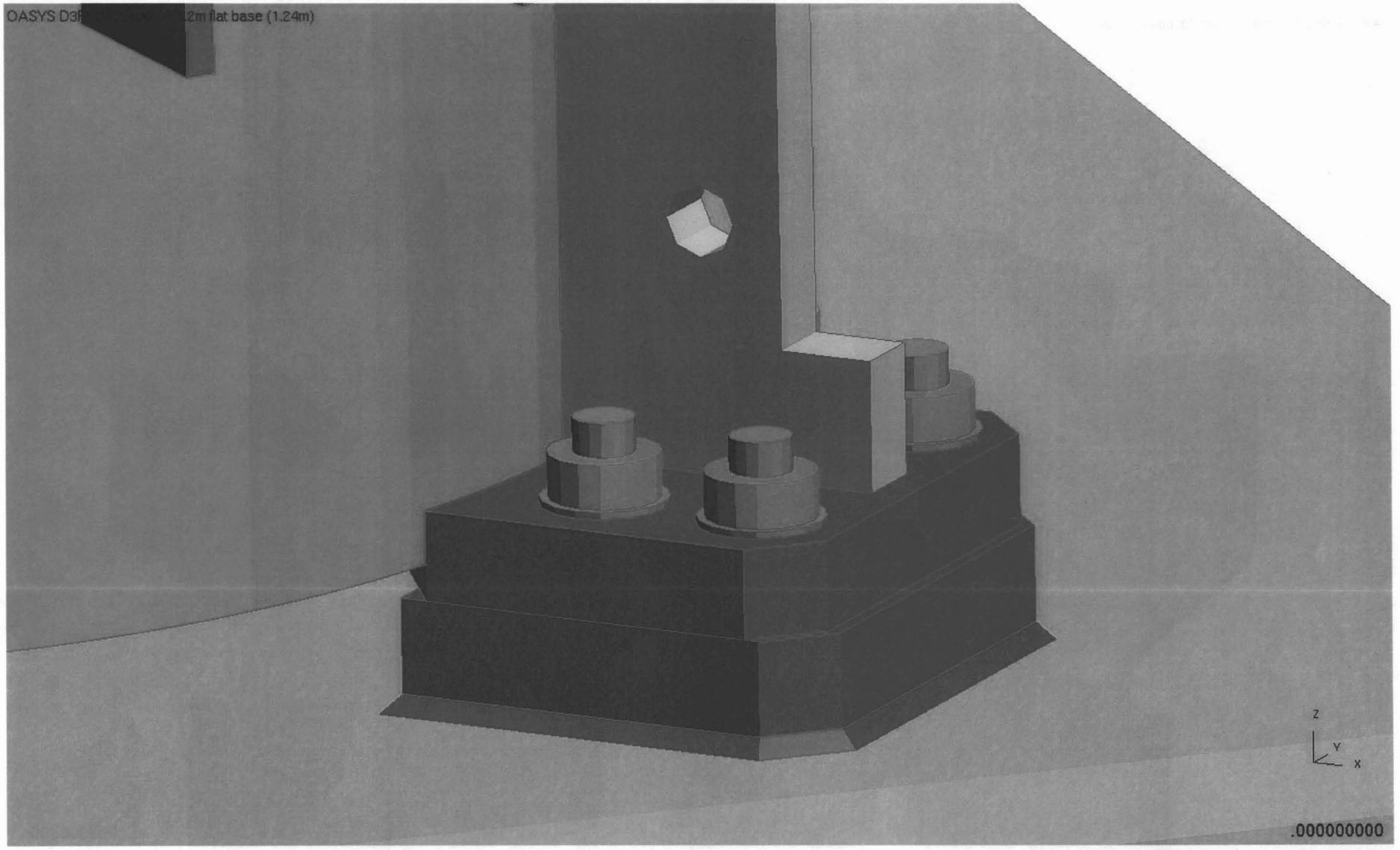

Reviss R7021 Drop Test Analysis

OASYS D3PLOT: Drop 1 - 1.2m flat base (1.24m)

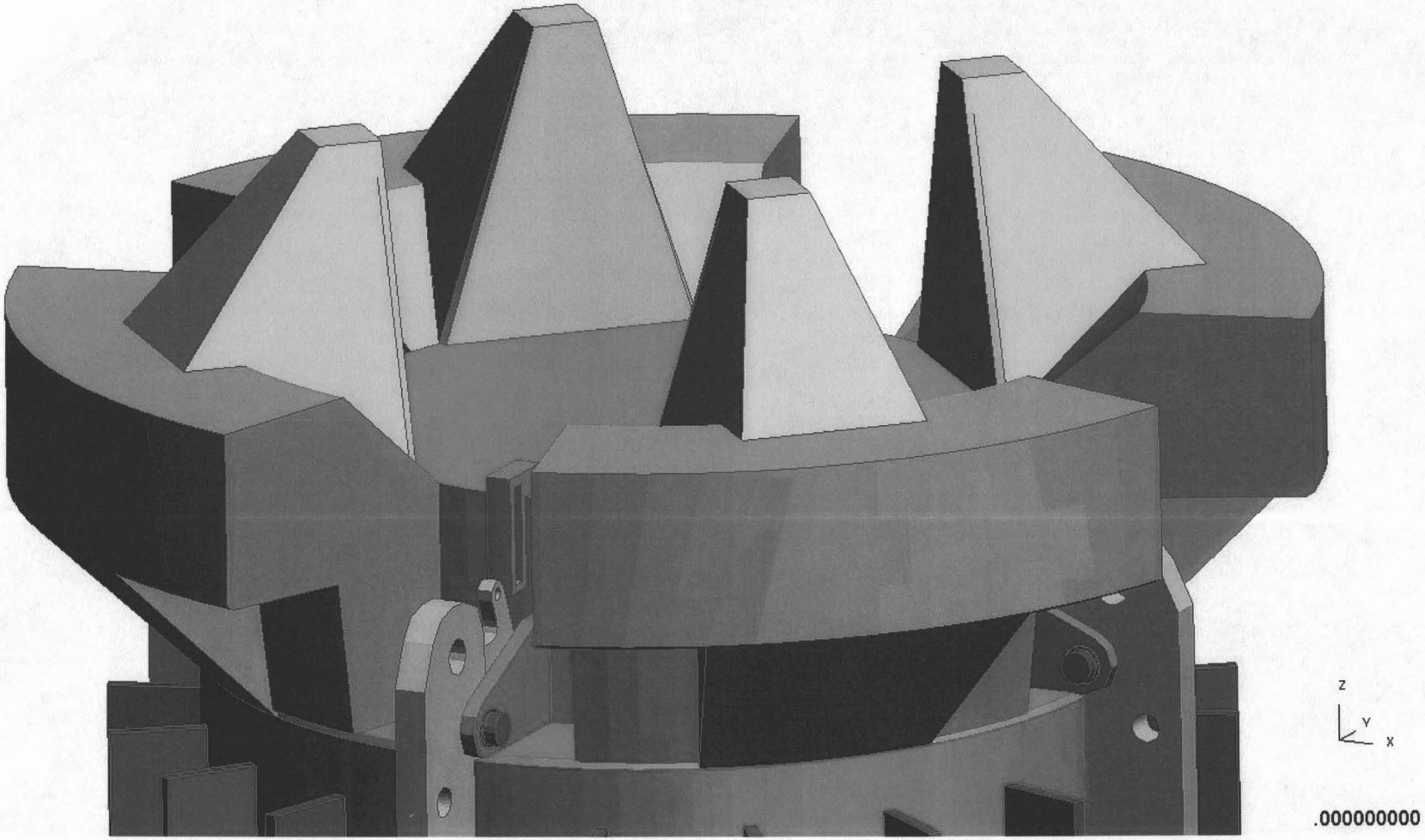

OASYS D3PLOT: Drop 1 - 1.2m flat base (1.24m)

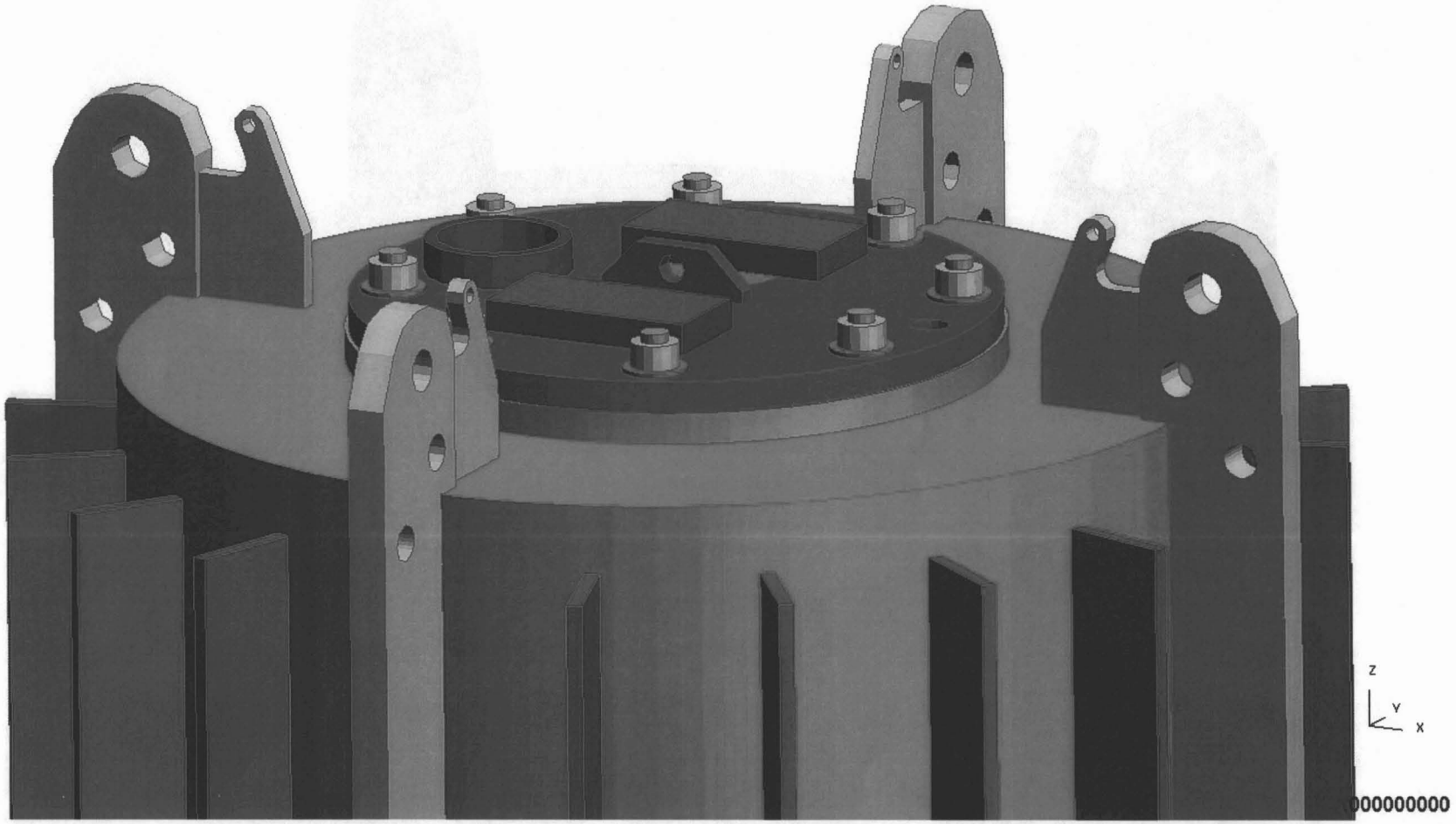

OASYS D3PLOT: Drop 1 - 1.2m flat base (1.24m)

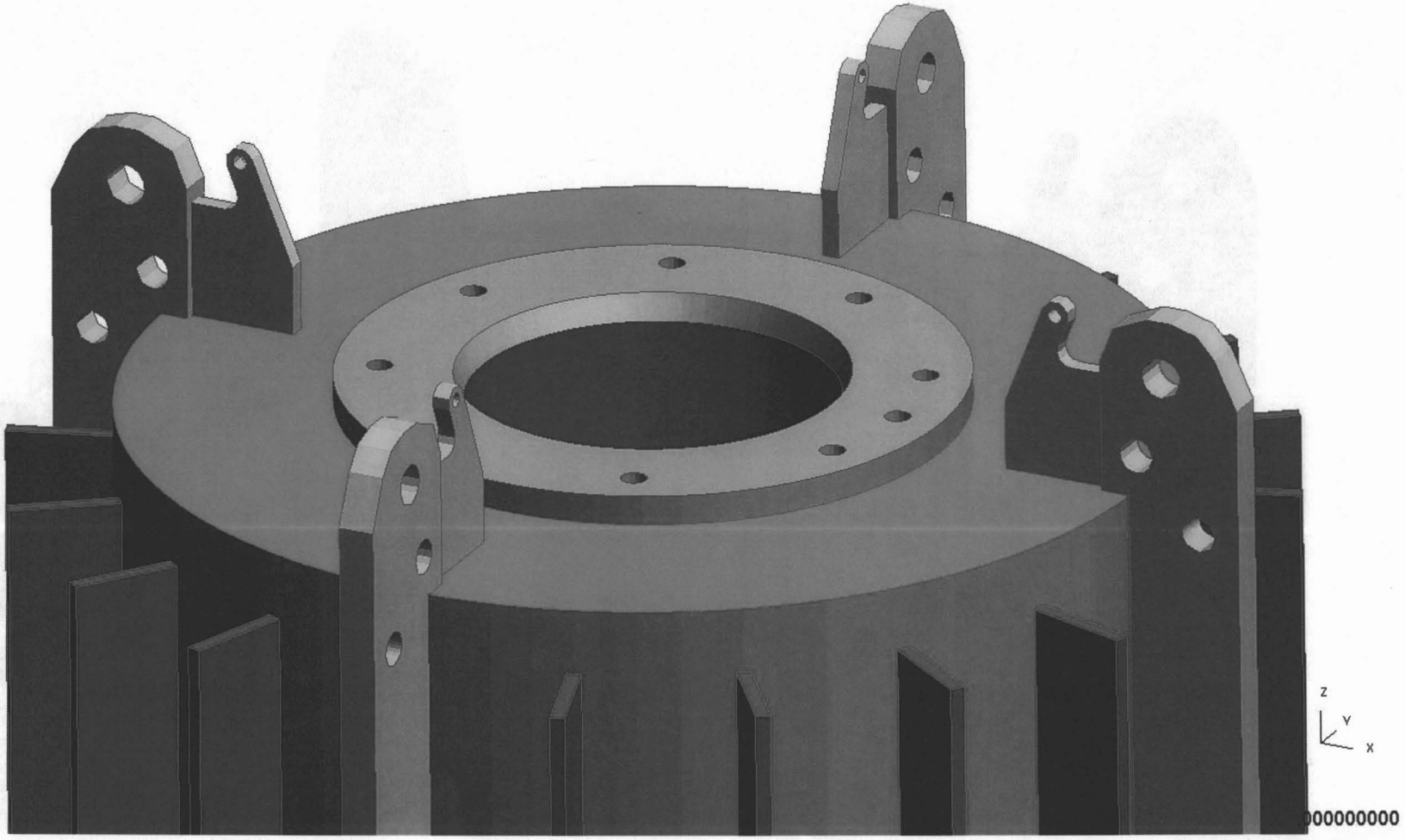

Reviss R7021 Drop Test Analysis

OASYS D3PLOT: Drop 1 - 1.2m flat base (1.24m)

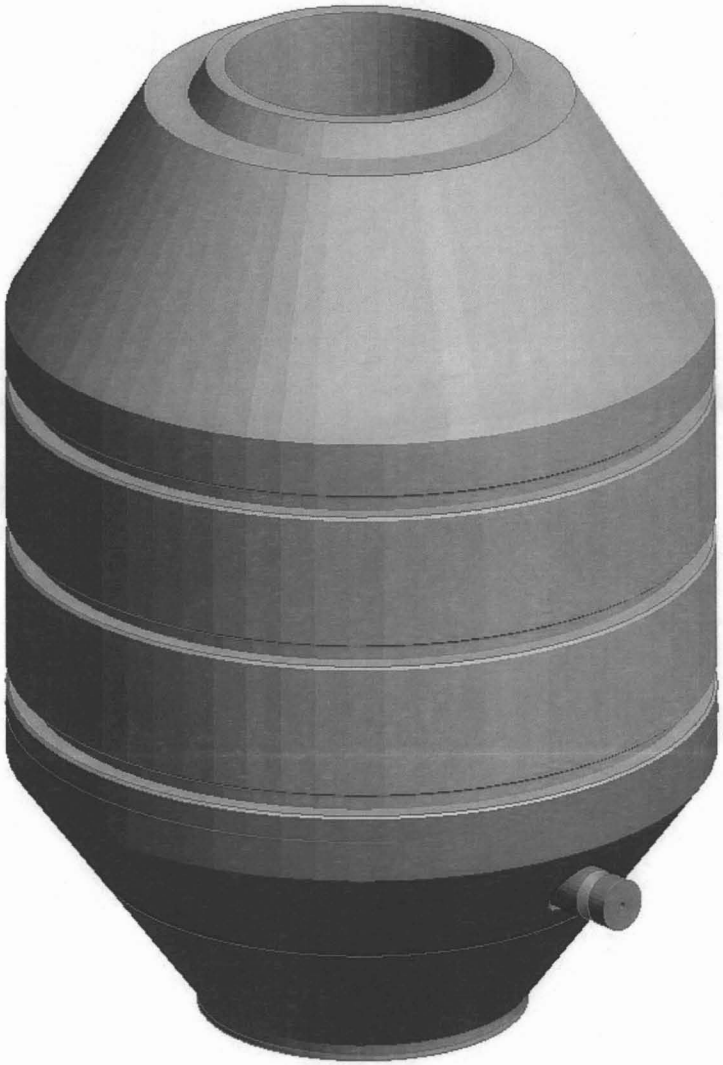

Z
Y
X

.000000000

OASYS D3PLOT: Drop 1 - 1.2m flat base (1.24m)

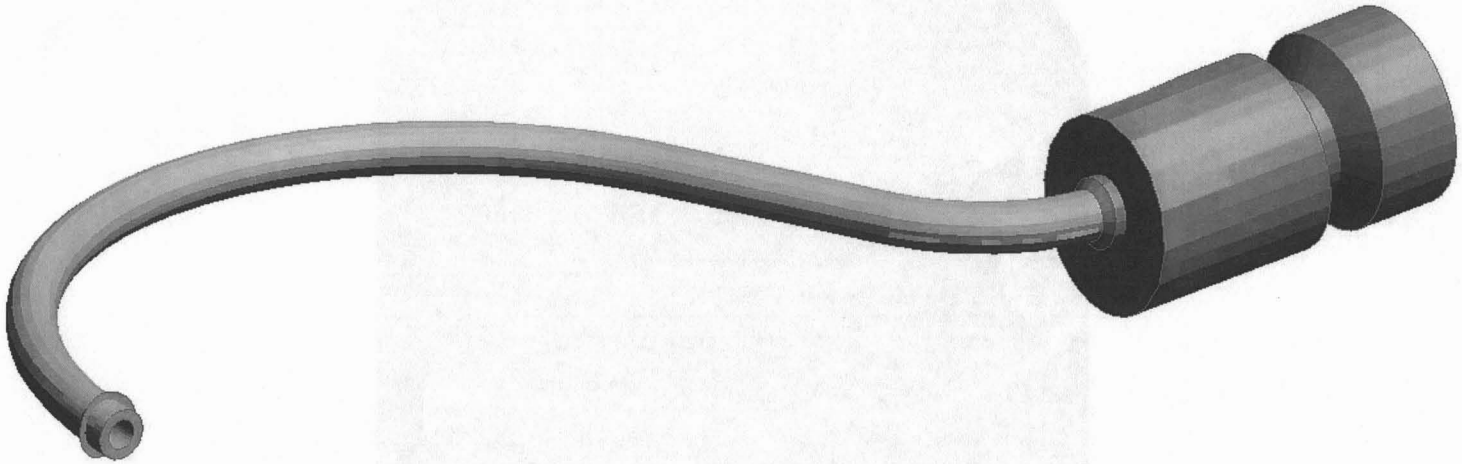

.000000000

Reviss R7021 Drop Test Analysis

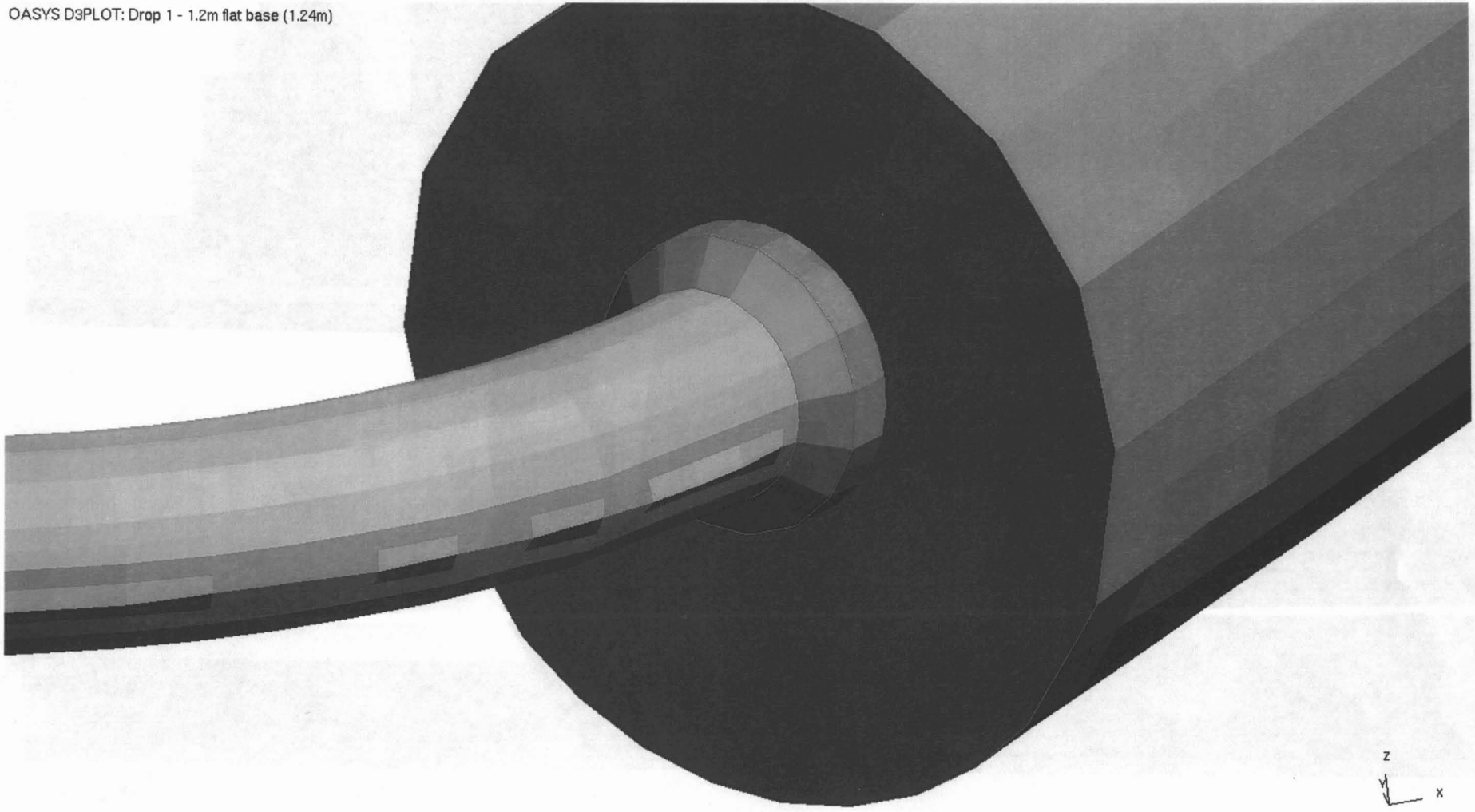

.000000000

Reviss R7021 Drop Test Analysis

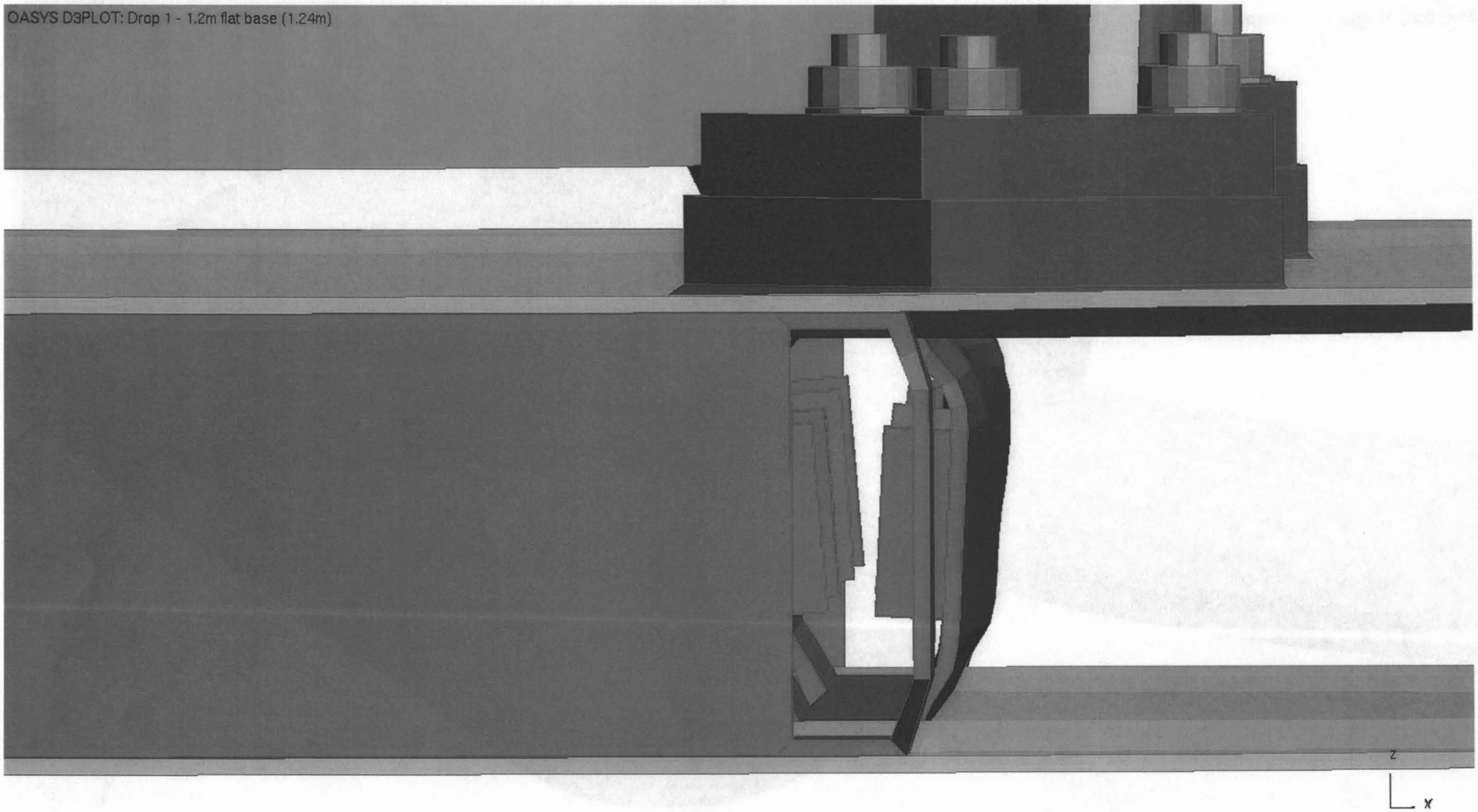

0.010000

Reviss R7021 Drop Test Analysis

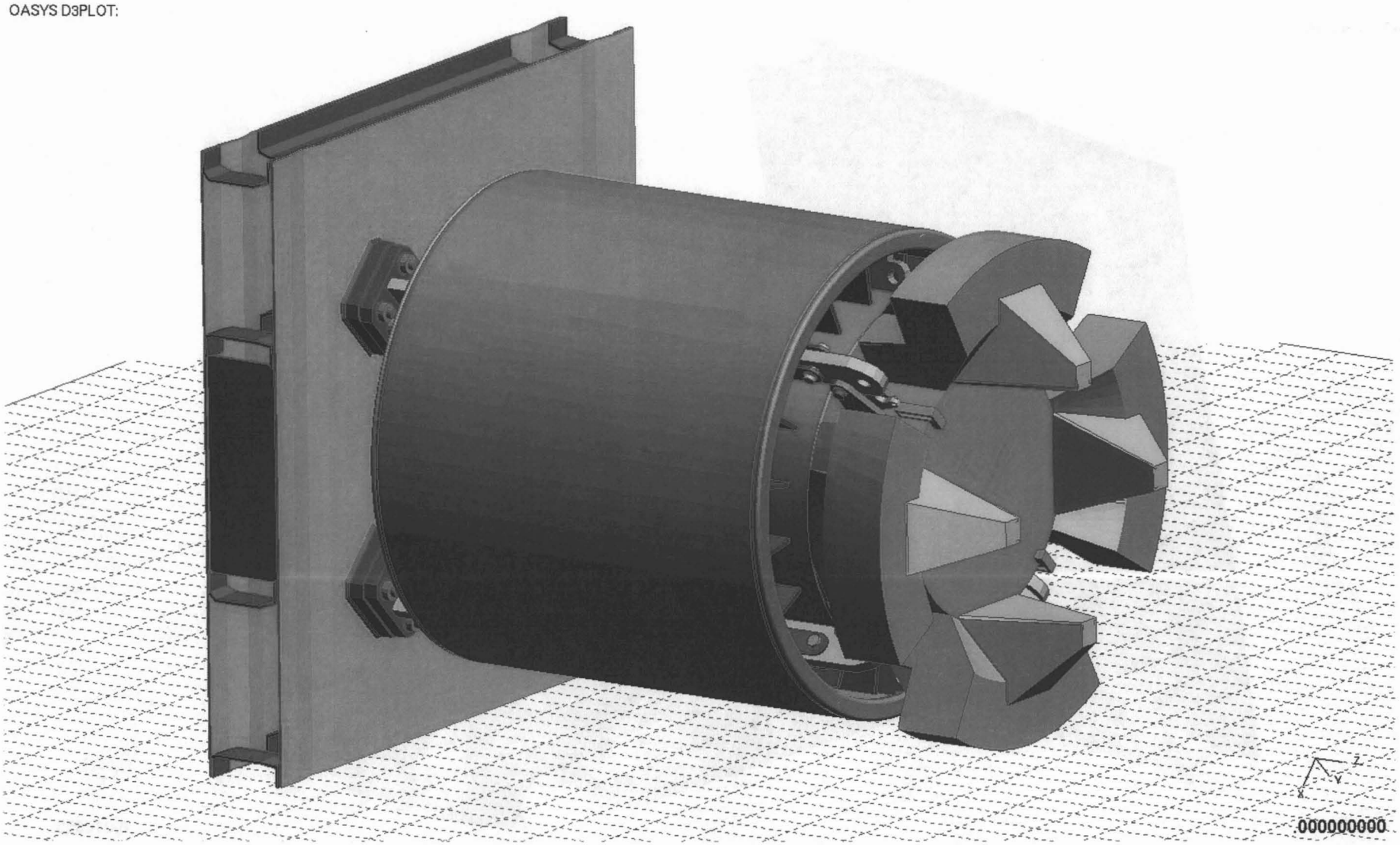

Reviss R7021 Drop Test Analysis

OASYS D3PLOT:

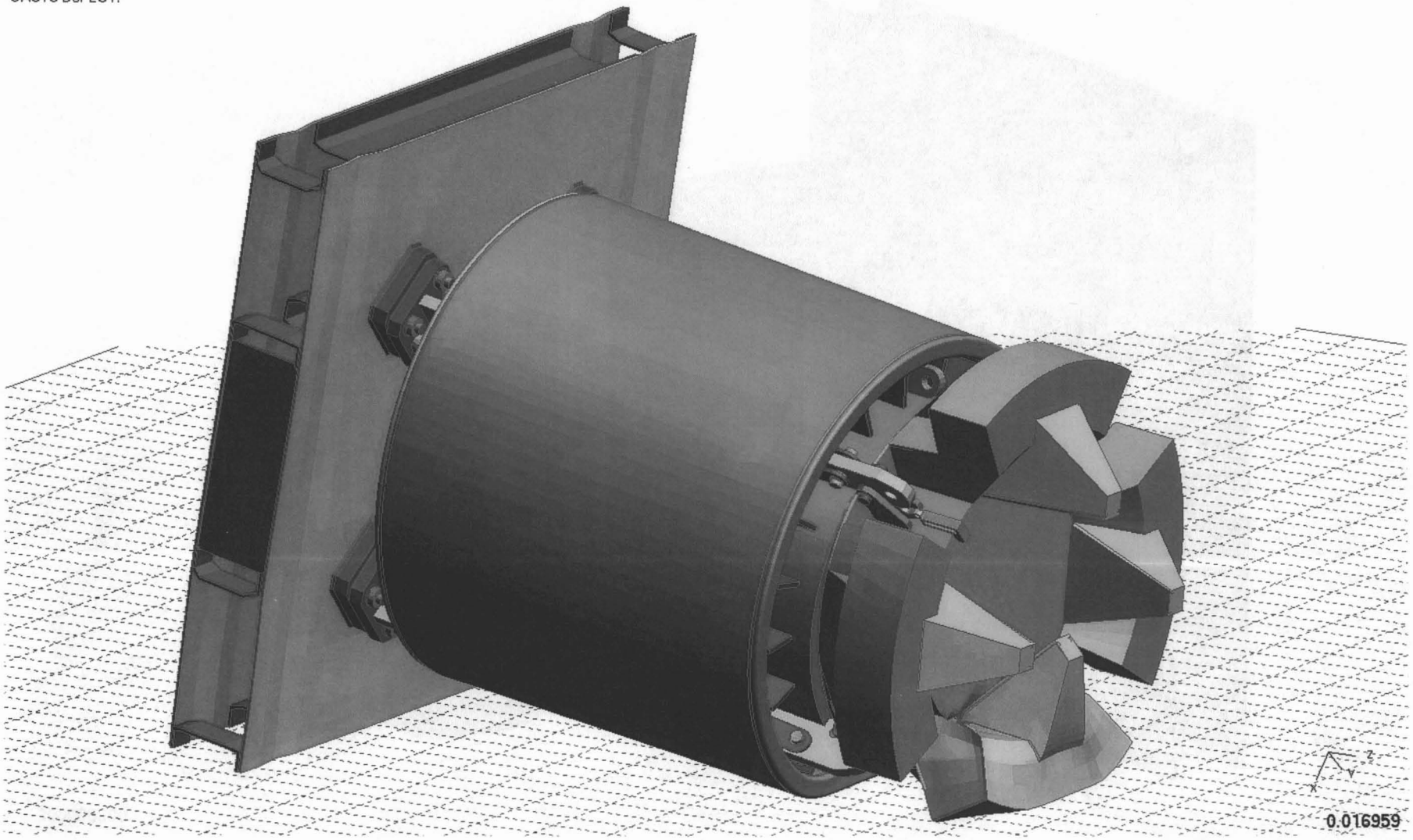

Reviss R7021 Drop Test Analysis

OASYS D3PLOT:

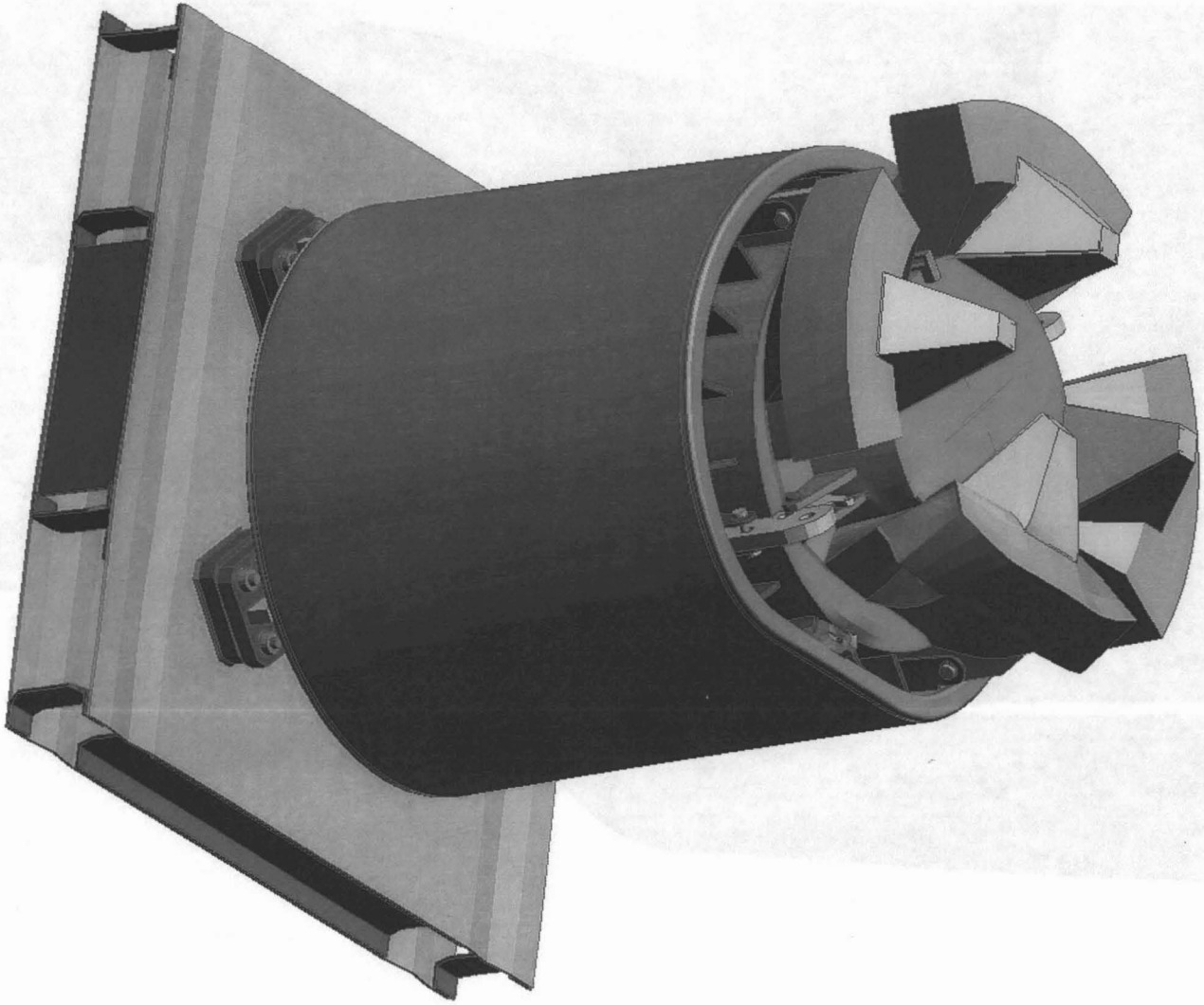

0.016959

Reviss R7021 Drop Test Analysis

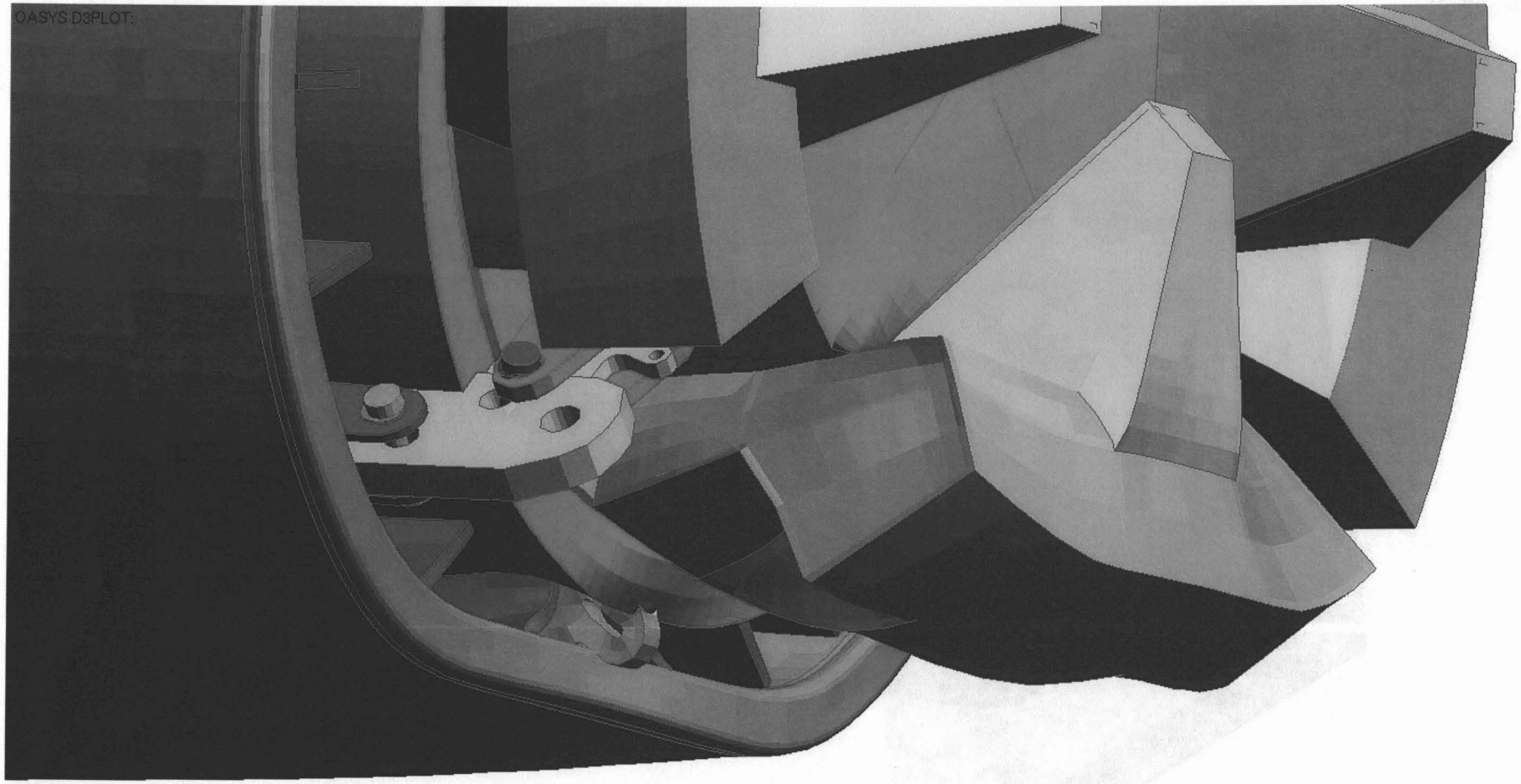

0.016959

Reviss R7021 Drop Test Analysis

OASYS D3PLOT:

Reviss R7021 Drop Test Analysis

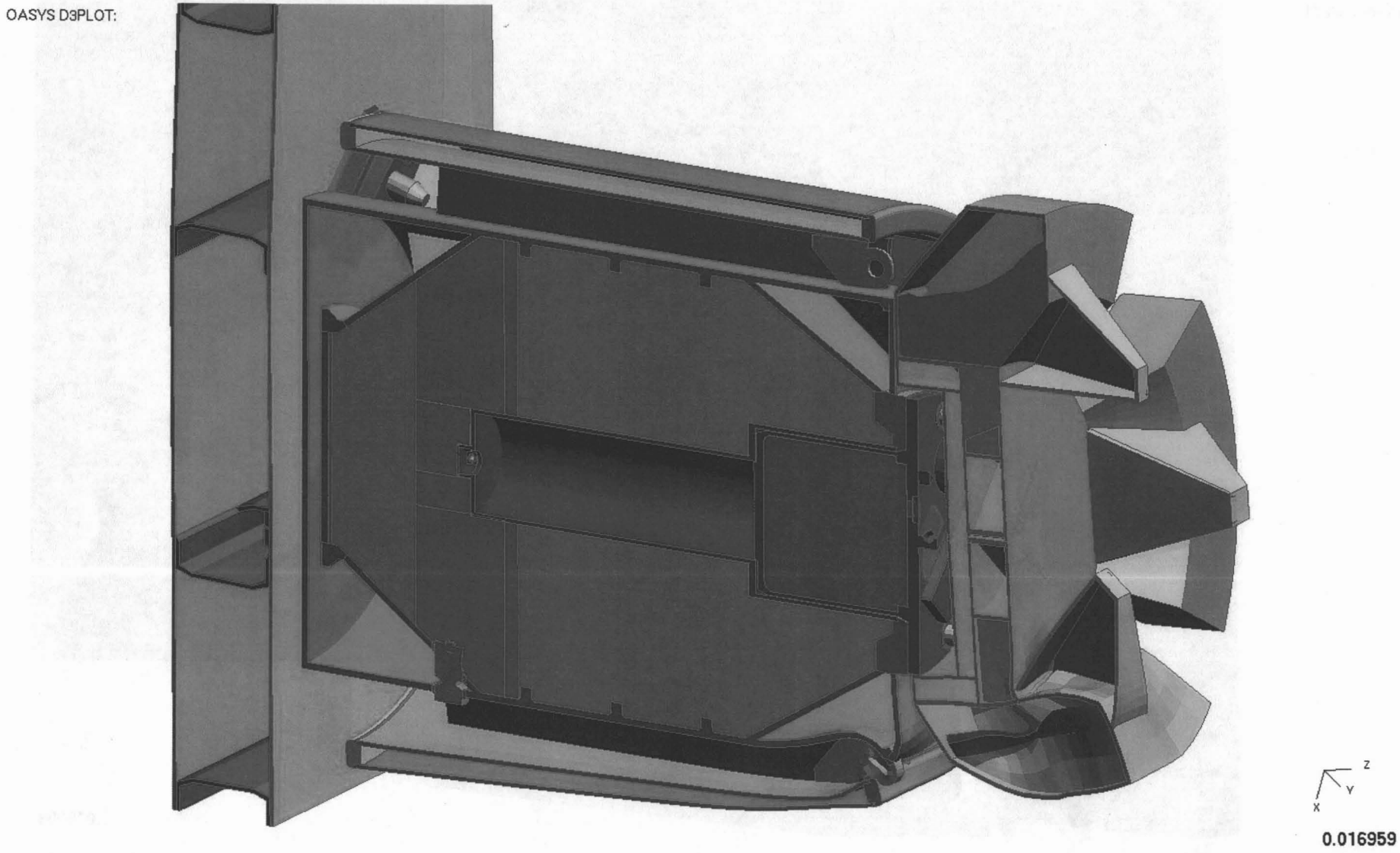
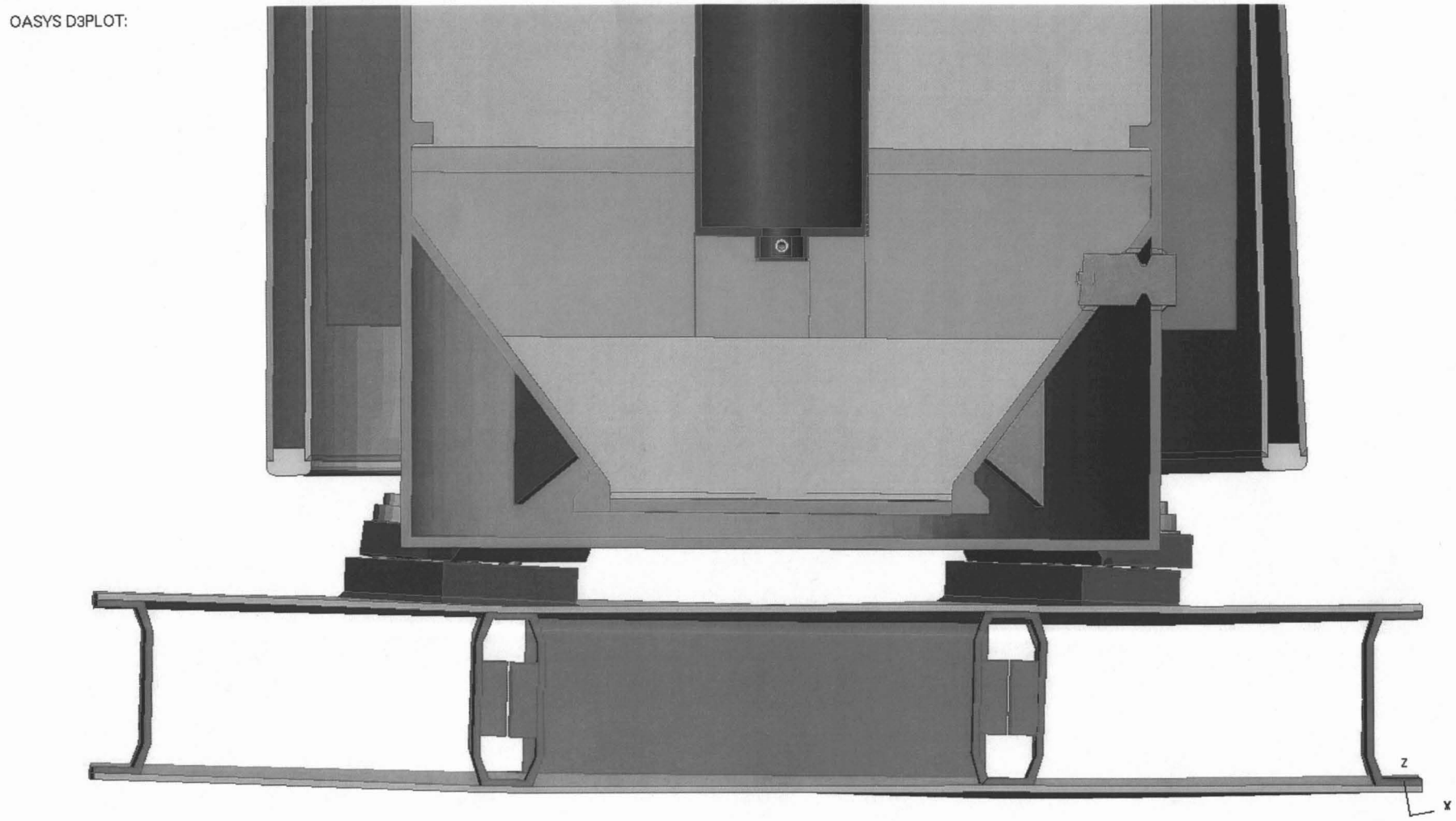
Reviss R7021 Drop Test Analysis