RAI Volume 2, Chapter 2.1.1.4, Second Set, Number 3

Provide technical basis for the assumption that Transportation Aging and Disposal (TAD) canisters and Dual Purpose Canisters will drop vertically, guided by the rails (SAR Section 1.7.2.3.1), and not off-vertical, during a transfer operation by the canister transfer machine and a seismic event.

DOE evaluation of TAD and DPC canisters for at a 23 feet 4-degree off-vertical drop in Table D 1.2-3 (BSC, 2008b) shows a significantly high probability of breach compared to 32.5 or 40 feet vertical drop. As indicated in SAR section 1.7.2.3.1, DOE relies on the guide sleeves to ensure a flat-bottom drop of canisters. The applicant, however, has not provided technical basis for not considering tolerances in placement of the guide rails, and description, design, and performance of the guide rails to demonstrate that the guide rails will perform its intended safety function during (a) operational event sequences and (b) seismic event sequences associated with transfer of canisters by the canister transfer machine.

1. RESPONSE

The purpose of the representative canister drop analysis is to establish reliability limits and provide confidence that, once canister-specific confirmatory structural analyses have been performed on canister designs that include tolerances for as-built variations in the canister, the preclosure safety analysis conclusions will remain valid. As discussed in SAR Section 5.10.2, the DOE will implement administrative controls sufficient to ensure that the reliability limits used in the preclosure safety analysis are met. More specifically, SAR Table 5.10-3 establishes the Canister and Transportation Cask Acceptance Program and identifies it as a probable subject of a license specification. The DOE will establish and implement a program governing the evaluation and acceptance of spent nuclear fuel and high-level radioactive waste shipping and storage canisters and transportation casks.

1.1 DESCRIPTION OF GUIDE SLEEVE DESIGN AND FUNCTIONS

The guide sleeve will keep a falling canister in a vertical orientation, facilitating a flat bottom or near flat bottom drop into the receiving container. The guide sleeve will be located inside the shield bell of the canister transfer machine and will slide in and out in a manner similar to that of a telescopic cylinder. The guide sleeve design concept is depicted in Figure 1. The inside diameter of the guide sleeve will be based on the maximum outside diameter of the canister and will account for the tolerances, design, thermal expansion, straightness, seismic, and out-of-roundness (ovality) of the canister.

In a typical canister loading and unloading operation, the canister transfer machine shield bell/guide sleeve will be aligned with the receiving container (i.e., waste package or aging overpack) positioned under the port slide gate. The guide sleeve will be lowered through the port slide gate with its bottom end only a few inches above the top of the receiving container.

The guide sleeve in the extended position will be supported at two areas: first at the shield bell bottom (some portion of the telescopic guide sleeve will be inside the shield bell), and second at the ceiling of the loading room (guide sleeve support rollers under the port slide gate) as shown in Figure 1. The ceiling-mounted support rollers, when extended, will provide lateral support and rigidity to the extended guide sleeve. The guide sleeve telescopic mechanism will consist of two hoist/spoolers, mounted 180 degrees apart at the top end of the shield bell. The two hoist cables connected to the top end of the guide sleeve will be used to raise the guide sleeve back into the shield bell (the full length of guide sleeve will fit in the shield bell) when transferring a canister. The design of the canister transfer machine is such that the canister can not be raised above the guide sleeve and shield bell.

In a canister drop scenario, the guide sleeve will maintain a falling canister in a vertical orientation as it falls into the receiving container. The inside diameter of the receiving container will be slightly larger than the inside diameter of the guide sleeve and will maintain the canister orientation, resulting in a near flat bottom drop of the canister. The design concept will require dedicated guide sleeves, due to the variation in canister diameters, ranging from 66.0 inches to 70.6 inches for various transportation, aging, and disposal (TAD) and dual-purpose canisters (DPCs).

The guide sleeve and the receiving container inside diameters facilitate a near flat bottom drop of the canister, that will produce a probability of failure less than the nuclear safety design bases (i.e., less than or equal to 1×10^{-5} per drop [SAR Table 1.5.1-7, DS.CR.26 and Table 1.5.1-9, DS.CR.20]).

1.2 CANISTER DROP ANGLE DETERMINATION

The canister drop angle is based on the geometrical relationship between the falling canister and the receiving container. The canister drop angle (D) is determined by using the canister nominal diameter (P), canister length (Q), and the receiving container inside diameter (T). This relationship is shown in Figure 2. The inside diameter of the guide sleeve (S) will be based on the maximum canister outer diameter (including all tolerances) plus one inch diametric clearance used for ease of handling a canister remotely. From the geometry shown in Figure 2,

$$T = P \cdot \cos(D) + Q \cdot \sin(D) \cong P + Q \cdot D \qquad \text{(Eq. 1)}$$

where the expression after the $\cong$ makes use of the small angle approximation. Thus the drop angle expressed in radians is,

$$D \cong (T - P)/Q = \Delta/Q \qquad \text{(Eq. 2)}$$

where Δ is the clearance between the receiving container inner diameter and the canister outer nominal diameter. As can be seen from Equation 2, the canister drop angle decreases for canisters with smaller clearances and longer lengths.

The calculation of maximum canister drop angle uses the minimum canister outer diameter and the maximum receiving canister inner diameter (based on the sum of the canister outer diameter,

the minimum clearance (defined below), and all tolerances). The minimum clearance between the receiving TAD container and canister will be one inch for ease of remote handling, increased by 0.25 inch to account for horizontal seismic displacement. The 0.25 inch value exceeds the largest horizontal seismic displacement (0.082 inch) over all the waste handling facilities. The maximum clearance between the outer diameter of the canister and inner diameter of the receiving container (Δ_m) is based on the sum of all tolerances as shown in Table 1 (i.e., design, thermal expansion, ovality, straightness, and minimum clearance). The nominal diameter (66.5 inches [+0.0 inches / −0.5 inches]) and surface temperature for a TAD canister (525°F) are obtained from the *Basis of Design for the TAD Canister-Based Repository Design Concept* (BSC 2008, Section 33.2.2.1 and Table 33-5) and are used to calculate the thermal expansion tolerance for the TAD. The permissible outside diameter variation and the straightness tolerance are calculated in accordance with paragraph numbers 10 and 14 of the *Specification for General Requirements for Specialized Carbon and Alloy Steel Pipe* (ASME 2007).

The receiving container for a DPC will be an aging overpack. The inner aging overpack vessel diameter is 76 inches and cavity length is 202.5 inches, as shown on *Aging Facility Vertical DPC Aging Overpack Mechanical Equipment Envelope Sheet 1 of 2* (BSC 2007). The maximum diameters for the two DPCs listed in Table 1 are based on the sum of all tolerances. The ovality and straightness are calculated in accordance with paragraph numbers 10 and 14 of the *Specification for General Requirements for Specialized Carbon and Alloy Steel Pipe* (ASME 2007). The dimensional and thermal information for these canisters is obtained from the canister vendor safety analysis reports (Thompson 2003; Sisley 2003). The two DPCs were selected based on their dimensional variations and provide a basis for developing the range of canister drop angles. The 0.25 inch tolerance for the seismic horizontal displacement does not need to be added as the aging overpack opening diameter (76 inches) is sufficient to accommodate any seismic displacement. In preparation of the aging overpack for loading and unloading operations, a dedicated cone guide will be placed inside the aging overpack. The cone guide will narrow down at the bottom to a diameter adequate to provide 3/8 inch diametric minimum clearance. This design feature will guide a nominal diameter DPC to attain a near flat bottom drop with a cone guide sized for the maximum diameter DPC. The cone guide concept is shown in Figure 2 and the drop angles are provided in Table 1.

1.3 STRUCTURAL RESPONSE OF NEAR-VERTICAL DROPS

Representative canister drop results presented in *Canister Receipt and Closure Facility Reliability and Event Sequence Categorization Analysis* (BSC 2009, Table D1.2-3) show that the maximum effective plastic strain resulting from a 40 foot end drop in a vertical orientation is 2.65% and that the maximum effective plastic strain resulting from a 23-foot end drop in a 4-degree off-vertical orientation is 24.19%. Using a linear relationship between these two drop angles (in degrees) and their maximum effective plastic strain values, the interpolated maximum effective plastic strain value at one degree is 8.04. This maximum effective plastic strain value at one degree would have a probability of failure below 1×10^{-8} using a triaxiality factor of 2 for both the unadjusted and adjusted capability curves.

As discussed in the SAR (Table 1.5.1-7, DS.CR.26 and Table 1.5.1-9, DS.CR.20), the nuclear safety design bases for both TAD and DPC canisters (as modeled as a representative canister)

states that the mean conditional probability of breach of a canister resulting from a canister drop shall be less than or equal to 1×10^{-5} per drop. Drop angles of one degree or less have a probability of failure much less than 1×10^{-5} per drop regardless of which fragility curve is used. As shown in Table 1, the maximum drop angle for a TAD canister is about 0.9 degrees and those for DPCs can range from about 0.8 to 1.0 degrees. For canisters with lower diametric clearance and/or greater lengths than those analyzed here, the canister drop angle will be less than these calculated maximum values. Therefore, these canisters will satisfy the nuclear safety design bases identified for damage due to drops; final designs and considering tolerances for the as-built configurations will be subjected to confirmatory calculations and modifications, as necessary, to assure compliance with the nuclear safety design bases.

The geometric and physical differences among the different types of canisters expected to be handled, as well as the potential effects of temperature and strain rate discussed in RAI 2.2.1.1.4-2-004, could affect the results of canister drop analyses. However a significant safety margin exists between the representative canister drop results and the nuclear safety design bases identified for damage due to canister drops.

2. COMMITMENTS TO NRC

None.

3. DESCRIPTION OF PROPOSED LA CHANGE

None.

4. REFERENCES

ASME (American Society of Mechanical Engineers) 2007. "Specification for General Requirements for Specialized Carbon and Alloy Steel Pipe." Section II, Part B of 2007 *ASME Boiler & Pressure Vessel Code*. 2007 Edition. SA-530/SA-530M. New York, New York: American Society of Mechanical Engineers. TIC 259190.

BSC (Bechtel SAIC Company) 2007. *Aging Facility Vertical DPC Aging Overpack Mechanical Equipment Envelope*. 170-MJ0-HAC0-00201-000-00B DCN001. Las Vegas, Nevada: Bechtel SAIC Company. ACC: ENG.20070928.0032; ENG.20080305.0005.

BSC 2008. *Basis of Design for the TAD Canister-Based Repository Design Concept*. 000-3DR-MGR0-00300-000-003. Las Vegas, Nevada: Bechtel SAIC Company. ACC: ENG.20081006.0001.

BSC 2009. *Canister Receipt and Closure Facility Reliability and Event Sequence Categorization Analysis*. 060-PSA-CR00-00200-000-00B. Las Vegas, Nevada: Bechtel SAIC Company. ACC: ENG.20090112.0004.

Sisley, S.E. 2003. "Transmittal of FuelSolutions W21 Canister Final Safety Analysis Report, Revision 2." Letter from S.E. Sisley (BNFL Fuel Solutions) to the NRC, June 30, 2003, BFS/NRC 03-010, Docket No. 72-1026, with enclosure. TIC: 257646.

Thompson, T.C. 2003. "Submittal of NAC-MPC FSAR, Revision 3, Docket No.72-1025." Letter from T.C. Thompson (NAC International) to the NRC, November 24, 2003, with attachments. TIC: 257649.

Table 1. Maximum Canister Drop Angle Determination

Canister	Outside Diameter (P)	Length (Q)	Design Tolerance (t)	Thermal Expansion (r)	Ovality (o)	Straightness (s)	Minimum Clearance (c)	Maximum Clearance $\Delta_m = t+r+o+s+c$	Maximum Drop Angle $D = (180°/\pi)\cdot(\Delta_m/Q)$
	in	in	in	in	in	in	in	in	degrees
TAD [(a)]	66.5	186.0	0.00	0.33	1.00	0.19	1.25	2.77	0.9
Yankee MPC-DPC [(b)]	70.64	122.5	0.12	0.49	1.06	0.13	0.375	2.18	1.0
Fuel Solutions W21/W74-DPC [(c)]	66.0	192.3	0.50	0.52	0.99	0.20	0.375	2.59	0.8

NOTE: [a]Outside diameter, length, and diameter tolerance from BSC 2008, Section 33.2.2.1
[b]Outside diameter, length, and diameter tolerance from Thompson 2003, Table 1.2-1 and drawing 870
[c]Outside diameter and length from Sisley 2003, Table 1.2-2. Diameter tolerance is a bounding assumption consistent with the lower bound for the TAD (BSC 2008, Section 33.2.2.1)

Source: Original

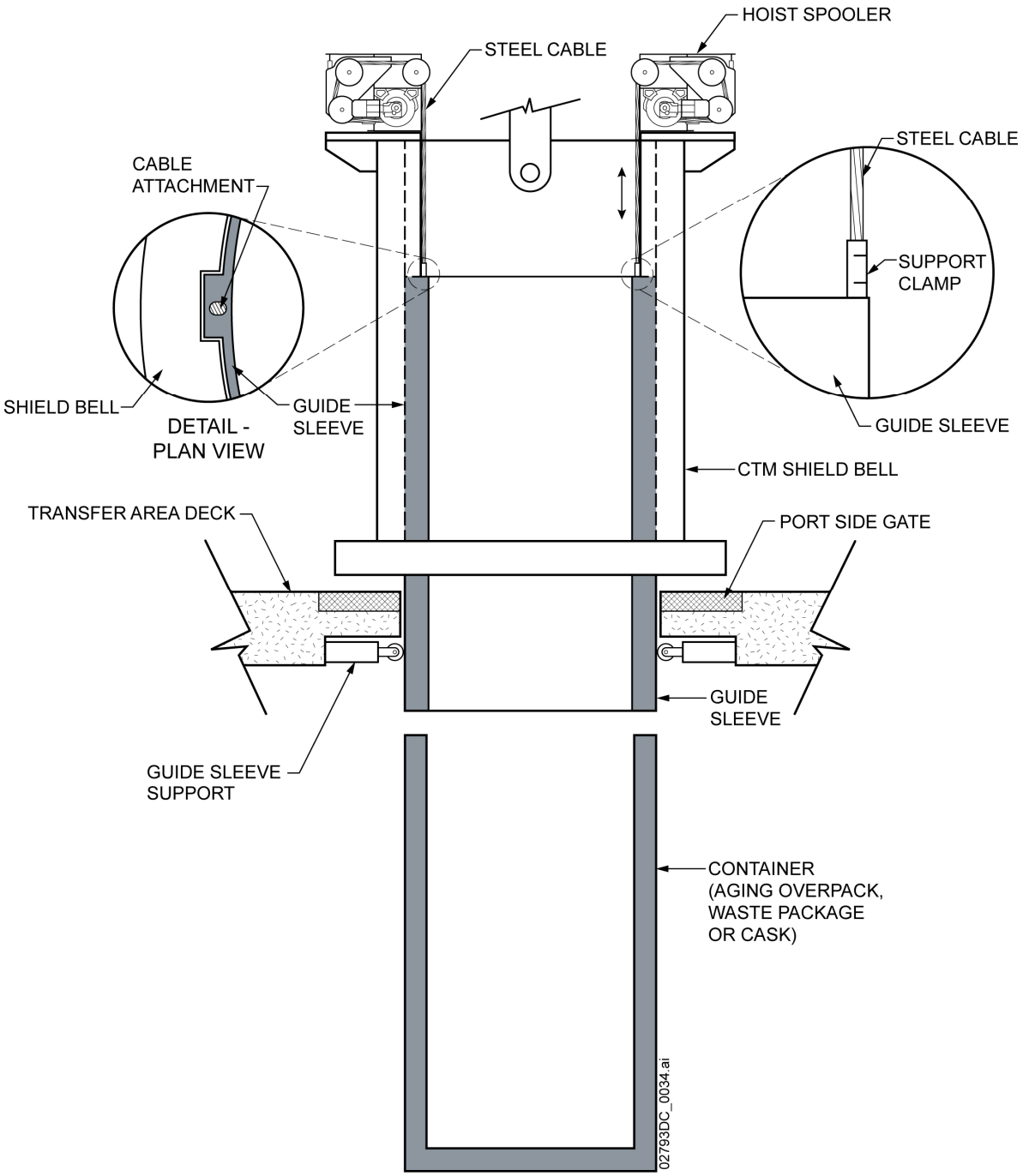

Figure 1. Canister Loading/Unloading with Guide Sleeve

NOTE: CTM = canister transfer machine.

Source: Original

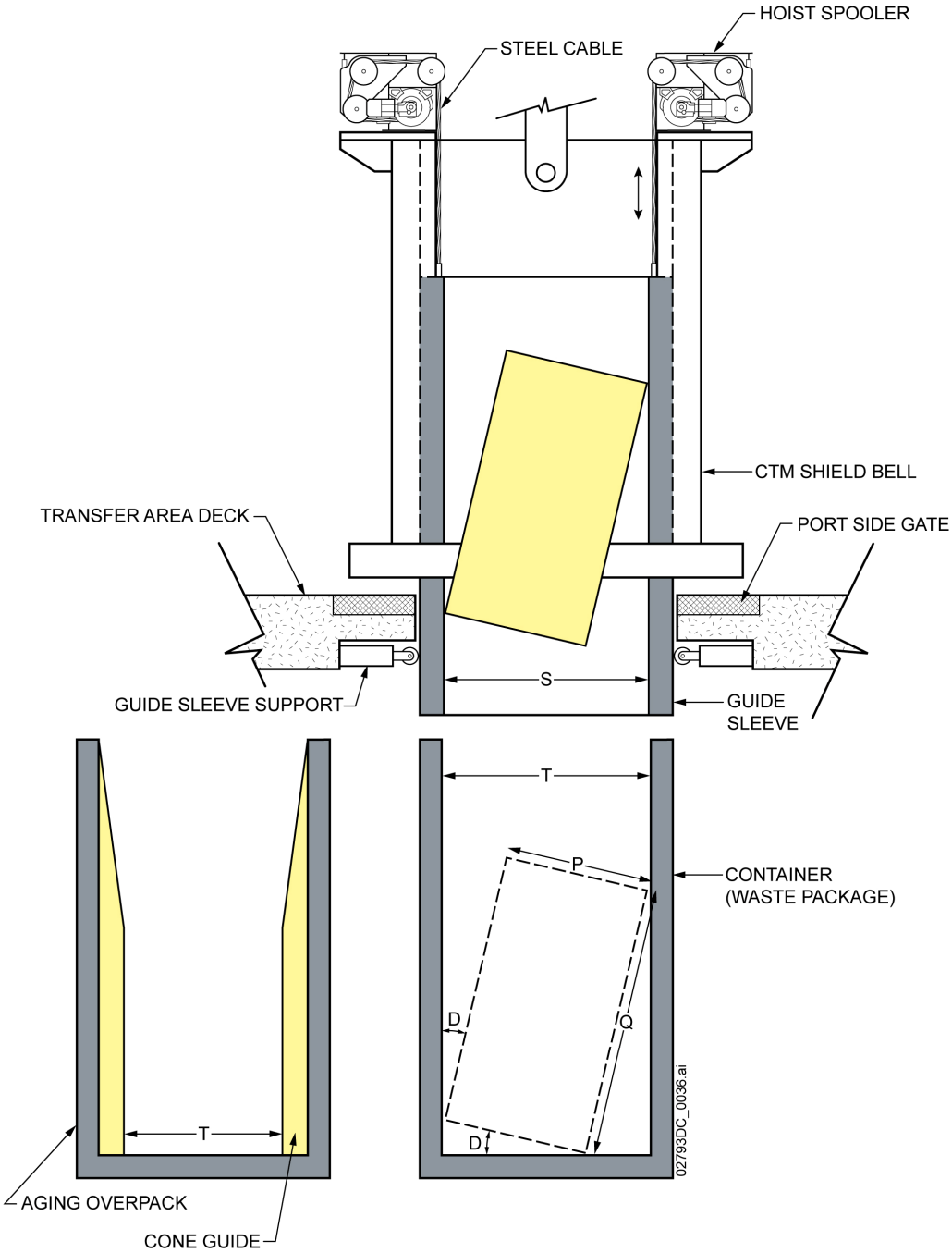

Figure 2. Canister Drop Angle Determination

NOTE: CTM = canister transfer machine.

Source: Original

RAI Volume 2, Chapter 2.1.1.4, Second Set, Number 6:

Explain the applicability of the shell wall and bottom-plate thickness sensitivity study presented in Table 6.3.3.6-1 (BSC, 2008a) to a TAD canister which has the design features given in Table 4.3.3-2 (BSC, 2008a).

Table 6.3.3.6-1 (BSC, 2008a) considers the orientation of 4 degrees off-vertical for dual purpose canister designs having different shell and bottom thicknesses. For case name S3-L3, this design has a maximum effective plastic strain of 18.08% and if the triaxiality factor is used Table 6.3.7.6-3 shows significant failure probabilities, i.e. on the order of 10^{-2} to 10^{-1}. Therefore, staff requests that further explanation of which case in Table 6.3.3.6-1 most closely models that of a TAD canister.

1. RESPONSE

The transportation, aging, and disposal (TAD) canister nominal dimensions include a 1-in. shell thickness and a 3.5-in. bottom-plate thickness, as shown in *Seismic and Structural Container Analyses for the PCSA* (BSC 2008, Table 4.3.3-2). The container dimensions of case S3-L3, which are a 1-in. shell thickness and 4-in. bottom-plate thickness (BSC 2008, Table 4.3.3-1c), most closely match those of the TAD canister. For a 23-ft end drop with the 4° off-vertical orientation, case S3-L3 results in a maximum effective plastic strain of 18.08% (BSC 2008, Table 6.3.3.6-1). A triaxiality factor of 2 yields failure probabilities of 1×10^{-2} and 1×10^{-1} without and with the fragility curve adjustment, respectively (BSC 2008, Table 6.3.7.6-3). However, as described in the response to RAI 2.2.1.1.4-2-003, a 4° off-vertical orientation is not achievable with the guide sleeve and guide rail design. The results in *Seismic and Structural Container Analyses for the PCSA* (BSC 2008, Tables 6.3.3.6-1 and 6.3.7.6-3) present a sensitivity study and are not intended as direct input or representations of the repository design, operation, or event sequences.

2. COMMITMENTS TO NRC

None.

3. DESCRIPTION OF PROPOSED LA CHANGE

None.

4. REFERENCES

BSC (Bechtel SAIC Company) 2008. *Seismic and Structural Container Analyses for the PCSA*. 000-PSA-MGR0-02100-000-00A. Las Vegas, Nevada: Bechtel SAIC Company. ACC: ENG.20080220.0003.

RAI Volume 2, Chapter 2.1.1.4, Second Set, Number 11:

Provide following clarifications with respect to probability of failure of stainless steel HLW canisters:

(a) Explain the reference to maximum effective plastic strain values in the Design Criteria of SAR Table 1.5.1-17 and the High Level Waste (HLW) canister capacity curve. As discussed in Section D1.3 (BSC 2008b) HLW canister probability of breach was estimated based on HLW canister drop test data and Bayesian approach.

(b) Provide basis for using probability value of 3×10^{-2} for HLW canister breach (SAR Table 1.5.1-17) in the event sequence analyses involving HLW waste canister drop. Probability of HLW canister discussed in Section D1.3 (BSC2008b) shows an estimate of 6.7×10^{-2} (Table 6.3-2, BSC 2008b) determined using HLW canister drop test data and Bayesian analysis.

(c) Provide technical basis for selecting the 13 number of drops from 30-ft drop tests, described in Reference D4.1.17 of BSC 2008b and used to calculate the failure probability of HLW canister (Section D1.3, BSC 2008b).

1. RESPONSE

The probability of failure for a stainless steel high-level waste (HLW) canister will be determined and implemented as part of the canister and transportation cask acceptance program identified in SAR Table 5.10-3. These failure probabilities will demonstrate compliance with the reliability limits established and used in the preclosure safety analysis (PCSA), which were based on HLW canister drop tests.

In SAR Table 1.5.1-17, the mean conditional probability of breach of a HLW canister resulting from a drop is given as 3×10^{-2} per drop. This estimate is based on Bayesian analysis of a data set with zero failures in 27 canister drop tests from (at least) 23 ft. Similarly, for a drop height of 30 ft, the mean failure probability of a HLW canister is given as 6.7×10^{-2} in Table 6.3-2 of *Canister Receipt and Closure Facility Reliability and Event Sequence Categorization Analysis* (BSC 2009). This estimate is based on the Bayesian analysis for the data set with zero failures in 13 canister drop tests from 30 ft.

The canister drop tests summarized in Table 2 of *Leak Path Factors for Radionuclide Releases from Breached Confinement Barriers and Confinement Areas* (BSC 2007) include both duplication of test presentation and tests that were excluded to obtain the counts used in Section D1.3 of the categorization analysis (BSC 2009).

1.1 SAR DESIGN CRITERIA

SAR Table 1.5.1-17 presents the nuclear safety design bases as well as the design criteria for HLW canisters. As described in SAR Section 1.5.1.2.5, the nuclear safety design bases are

derived from the PCSA and identify the safety function to be performed and the controlling parameters with values or ranges of values that represent the design including uncertainties. In contrast, the design criteria are specific descriptions of the structures, systems, and components utilized to implement the assigned safety functions. The PCSA assessed the failure probability of HLW canisters using a Bayesian analysis based on drop tests and determined the nuclear safety design basis for HLW canisters providing containment. In general, the PCSA establishes reasonable reliability limits and provides confidence that once canister-specific structural analyses have been performed, the PCSA conclusions will remain valid. In accordance with SAR Table 5.10-3, canister-specific analyses will be performed prior to receiving HLW canisters. However, it is expected that an analysis will develop a HLW canister failure probability, based on comparison of strain analysis with strain capacity (i.e., fragility). These analyses will be implemented as part of the Canister and Transportation Cask Acceptance Program identified in SAR Table 5.10-3. It is reasonable to expect that such an analysis would result in an estimate of probability of failure upon drop no greater than that generated by use of the test data.

1.2 BASIS FOR SAR PROBABILITY VALUE

The probability of failure from drops of HLW canisters is assessed by evaluating actual drop test data. Reports on these tests are summarized in *Leak Path Factors for Radionuclide Releases from Breached Confinement Barriers and Confinement Areas* (BSC 2007). No canister breaches were found in 27 drop tests, consisting of 14 drop tests from 23 ft and 13 drop tests from 30 ft. These tests are interpreted as a series of Bernoulli trials, for which the outcome is a failure (canister does breach) or success (canister does not breach). A Bayesian analysis of the data with a binomial likelihood and uniform prior distribution, results in a beta posterior distribution (BSC 2009, Section D1.3).

For zero failures in 13 drop tests from 30 ft, the posterior mean and standard deviation equals 0.067 and 0.062, respectively. The mean failure probability of a HLW canister for a drop height of 30 ft is given as 6.7×10^{-2} per drop (BSC 2009, Table 6.3-2).

For zero failures in 27 drop tests from (at least) 23 ft, the posterior mean and standard deviation equals 0.034 and 0.033, respectively (BSC 2009, Section D1.3, page D-24). Note that the count of 27 tests is the result of combining the 14 drop tests at 23 ft and the 13 drop tests at 30 ft. This is the basis for using the mean conditional probability of breach of a HLW canister resulting from a drop of less than or equal to 3×10^{-2} per drop as stated in SAR Table 1.5.1-17. This failure probability is appropriately used in event sequences that involve drops at heights at or less than 23 ft (e.g., 09-HLW-FAIL-DROP and 09-HLW-FAIL-DROPON (BSC 2009, Table 6.3-8)).

1.3 TECHNICAL BASIS FOR THE SELECTED 30-FOOT DROP TESTS

The canister drop tests in Table 2 of *Leak Path Factors for Radionuclide Releases from Breached Confinement Barriers and Confinement Areas* (BSC 2007) include both duplication of test presentation and tests which were excluded to obtain the test counts used in the categorization analysis (BSC 2009, Section D1.3). The canister drop tests in *FY1999 Drop Testing Report for the Standardized 18-Inch DOE SNF Canister* (Morton et al. 2002) were excluded because the canister configuration differed from a HLW canister. The canister drop

tests reported in *Impact Testing of Centrifugally Cast Canisters of Simulated Waste Glass* (Peterson and Alzheimer 1984) and *Impact Testing of Simulated High-Level Waste Glass Canisters* (Peterson et al. 1985) represent the same tests, which are included in the tests summarized in *SRL Canister Impact Tests* (Kelker 1986). There are 12 canister drop tests used from Table 1 of *SRL Canister Impact Tests* (Kelker 1986) based on either a top or bottom drop of Type 304L stainless steel canisters (Drop Test Numbers 1, 2, 5, 7, 8, 10, 11, 13, 14, 16, 17, and 19). The canister drop tests excluded are those with the titanium canister (Drop Test Numbers 3 and 4) and those involving side drops (Drop Test Numbers 6, 9, 12, 15, and 18). Therefore, the 13 canister drop tests from 30 ft are the 12 tests listed in *SRL Canister Impact Tests* (Kelker 1986) with one additional test from *DWPF Canister Impact Testing and Analysis for the Transportation Technology Center* (Farnsworth and Mishima 1988).

2. COMMITMENTS TO NRC

None.

3. DESCRIPTION OF PROPOSED LA CHANGE

None.

4. REFERENCES

BSC (Bechtel SAIC Company) 2007. *Leak Path Factors for Radionuclide Releases from Breached Confinement Barriers and Confinement Areas.* 000-00C-MGR0-01500-000-00A. Las Vegas, Nevada: Bechtel SAIC Company. ACC: ENG.20071018.0002.

BSC 2009. *Canister Receipt and Closure Facility Reliability and Event Sequence Categorization Analysis.* 060-PSA-CR00-00200-000-00B. Las Vegas, Nevada: Bechtel SAIC Company. ACC: ENG.20090112.0004.

Farnsworth, R.K. and Mishima, J. 1988. *DWPF Canister Impact Testing and Analysis for the Transportation Technology Center.* PNL-6379. Richland, Washington: Pacific Northwest Laboratory. ACC: NNA.19890317.0077.

Kelker, J.W., Jr. 1986. *SRL Canister Impact Tests.* DP-1716. Aiken, South Carolina: Savannah River Laboratory. ACC: MOL.19980810.0023.

Morton, D.K.; Snow, S.D.; and Rahl, T.E. 2002. *FY1999 Drop Testing Report for the Standardized 18-Inch DOE SNF Canister.* EDF-NSNF-007, Rev. 2. Idaho Falls, Idaho: U.S. Department of Energy, Idaho Operations Office. ACC: MOL.20040510.0104.

Peterson, M.E. and Alzheimer, J.M. 1984. *Impact Testing of Centrifugally Cast Canisters of Simulated Waste Glass.* PNL-5250. Richland, Washington: Pacific Northwest Laboratory. ACC: NNA.19890906.0185.

Peterson, M.E.; Alzheimer, J.M.; and Slate, S.C. 1985. *Impact Testing of Simulated High-Level Waste Glass Canisters.* PNL-5251. Richland, Washington: Pacific Northwest Laboratory. ACC: NNA.19890713.0219.