Stress Intensity Factor Influence Coefficients for External Surface Flaws in Boiling Water Reactor Pressure Vessels

S. Yin, T. L. Dickson,

P. T. Williams, and B. R. Bass

Computational Sciences and Engineering Division

Oak Ridge National Laboratory

2009 ASME Pressure Vessels and Piping Conference

July 26-30, 2009, Prague, Czech Republic

U.S. DEPARTMENT OF ENERGY

PISA

OAK RIDGE NATIONAL LABORATORY

MANAGED BY UT-BATTELLE FOR THE U.S. DEPARTMENT OF ENERGY

Generalize FAVOR Code to Include BWRs and Heat-up Transients

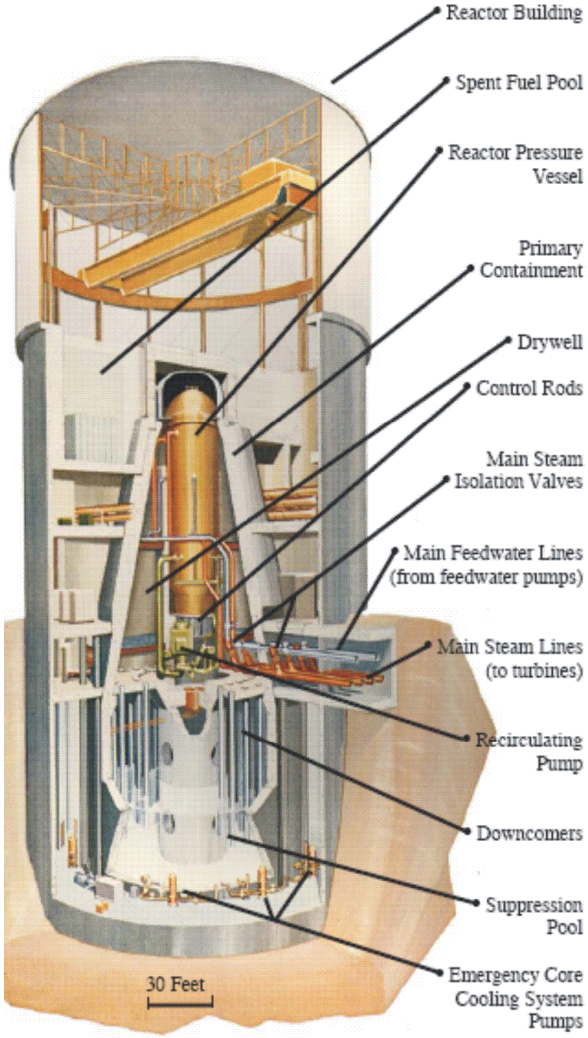

- PWR vessels in the US have internal radius to wall thickness (R_i/t) ratio approximately 10;
- BWR vessels in the US have R_i/t ratio between 15 and 20;
- Previous versions of FAVOR has been developed for PWRs subjected to PTS;
- The NRC is performing work to enable a risk-informed revision to the requirements of 10CFR50 Appendix G, which provides operational limits for scheduled transients, including cool-down and heat-up transients.

SIFICs for Boiling Water Reactor Pressure Vessels

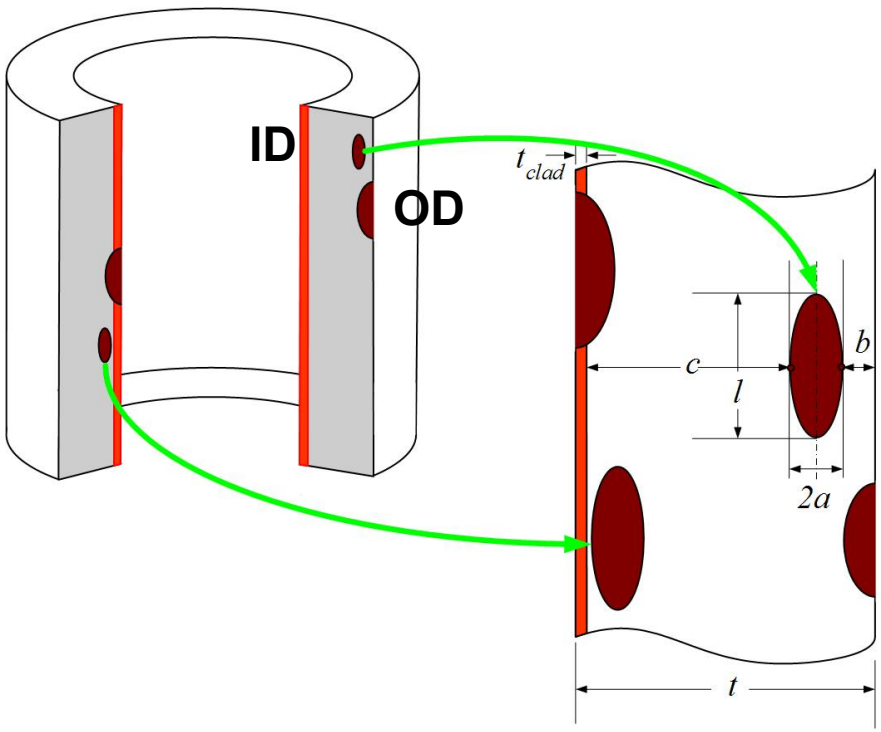

Complete SIFIC database have been developed for three flaw geometries often utilized in fracture analyses of BWR pressure vessels subjected to heat-up transients:

- Semi-elliptical finite-length external surface flaws with aspect ratio (*L*/*a*) of 2, 6, and 10;
- infinite-length axial external surface flaws;
- 360º circumferential external surface flaws.

Mode I Stress-Intensity Factors

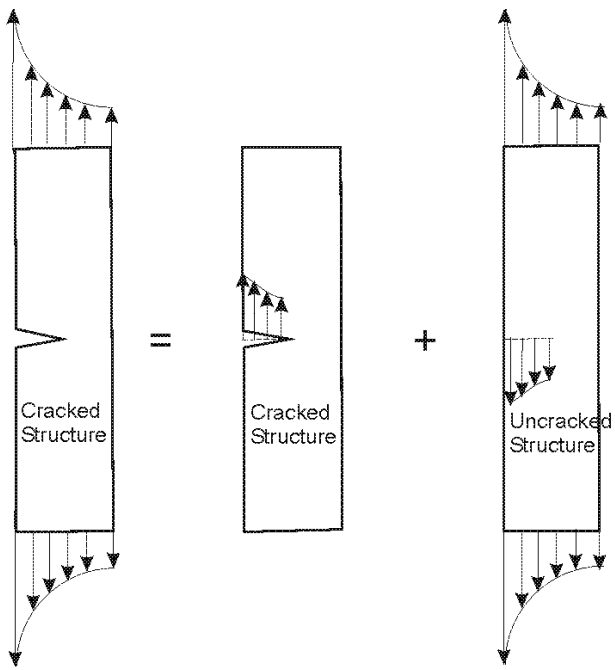

$$K_I = K_I^* + K_I^{**} = 0$$

- For the cracked structure under LEFM conditions, the singular stress field in the vicinity of the crack tip can be characterized by a single parameter. This one-parameter model has the form

$$\sigma_{\theta\theta} = \frac{K_I}{\sqrt{2\pi r}} \quad \text{for axial flaws}$$

$$\sigma_{zz} = \frac{K_I}{\sqrt{2\pi r}} \quad \text{for circumferential flaws}$$

- The stress intensity factor, K_I, can be calculated by a linear superposition technique.

Semi-elliptic Finite-Length Surface Flaws

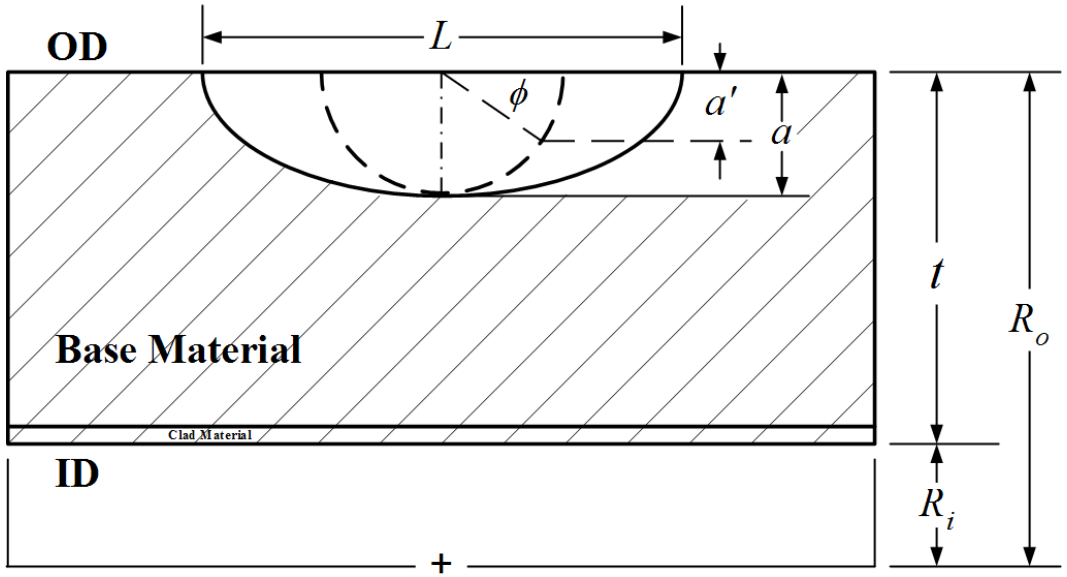

Influence coefficients, *K, have been calculated for finite-length semi-elliptical external-surface flaws with aspect ratios *L*/*a* = 2, 6, and 10 for *BWRs*.**

Linear Superposition Technique Used to determine finite-length 3D flaw SIFICs

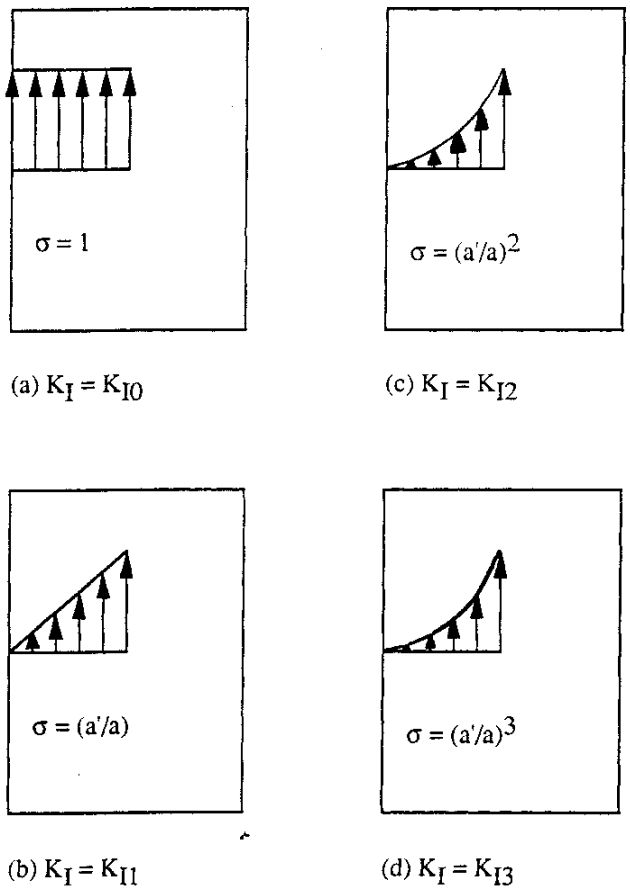

- ***Crack-surface Loading Cases for determining finite-length 3D flaw SIFICs:***
  - **Uniform unit load**
  - **Linear load**
  - **Quadratic load**
  - **Cubic load**

Finite-element Model for an External Finite-length Axial Flaw

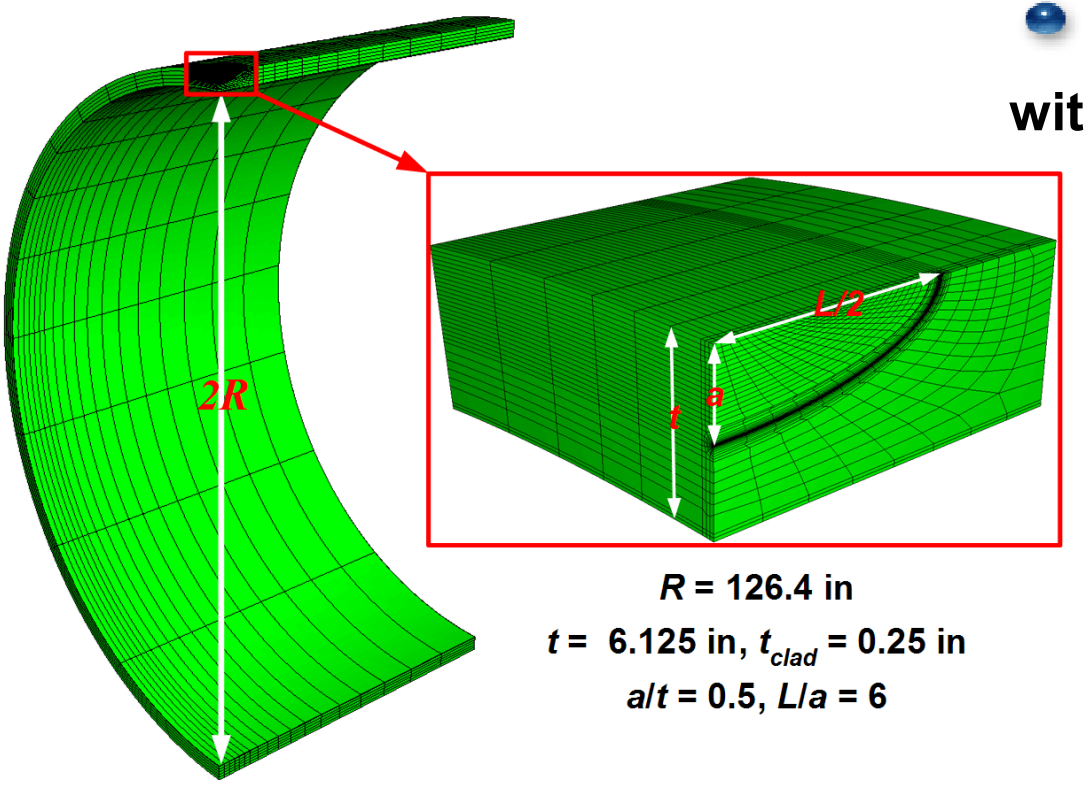

R = 126.4 in

t = 6.125 in, t_{clad} = 0.25 in

a/t = 0.5, L/a = 6

- **Finite-element model for BWR with a external surface flaw:**
  - Inside radius of 126.4 inches (3210.56 mm),
  - Wall thickness, t, of 6.125 inches (155.58 mm),
  - Clad thickness, t_{clad}, of 0.25 inches (6.35 mm).

Influence Coefficients for Outside Axial Surface Crack: Ri/t=20, and a/t=0.1

Aspect Ratio = 2:1

Φ	K0 (Uniform)	K1 (Linear)	K2 (Quad)	K3 (Cubic)
0.0	0.6919	0.1113	0.0429	0.0227
3.9	0.7084	0.1348	0.0506	0.0263
12.1	0.6805	0.1711	0.0644	0.0318
21.1	0.6548	0.2126	0.0894	0.0442
31.1	0.6475	0.2640	0.1311	0.0717
42.1	0.6520	0.3233	0.1910	0.1209
47.9	0.6347	0.3437	0.2193	0.1487
60.7	0.6196	0.3848	0.2813	0.2180
67.8	0.6954	0.4666	0.3639	0.3000
74.8	0.6548	0.4487	0.3609	0.3077
90.0	0.6077	0.4386	0.3676	0.3257

Aspect Ratio = 6:1

Φ	K0 (Uniform)	K1 (Linear)	K2 (Quad)	K3 (Cubic)
0.0	0.5023	0.0784	0.0277	0.0137
5.7	0.5173	0.0940	0.0319	0.0152
16.1	0.5119	0.1256	0.0440	0.0196
22.6	0.5912	0.1680	0.0642	0.0293
31.3	0.6510	0.2237	0.0990	0.0495
45.1	0.7408	0.3202	0.1757	0.1058
52.5	0.7618	0.3627	0.2187	0.1443
60.6	0.8075	0.4146	0.2704	0.1930
75.7	0.8474	0.4774	0.3424	0.2689
82.6	0.8625	0.4959	0.3632	0.2916
90.0	0.8727	0.5056	0.3734	0.3023

Aspect Ratio = 10:1

Φ	K0 (Uniform)	K1 (Linear)	K2 (Quad)	K3 (Cubic)
0.0	0.1918	0.0152	0.0048	0.0023
5.3	0.5177	0.0708	0.0202	0.0086
11.3	0.5329	0.0997	0.0281	0.0108
21.3	0.6157	0.1645	0.0567	0.0227
31.0	0.7411	0.2512	0.1083	0.0519
40.7	0.8261	0.3390	0.1757	0.0996
47.7	0.8667	0.3966	0.2290	0.1441
60.7	0.9581	0.5088	0.3421	0.2511
70.6	0.9834	0.5602	0.4052	0.3204
81.6	1.0127	0.6023	0.4554	0.3767
90.0	1.0142	0.6097	0.4661	0.3899

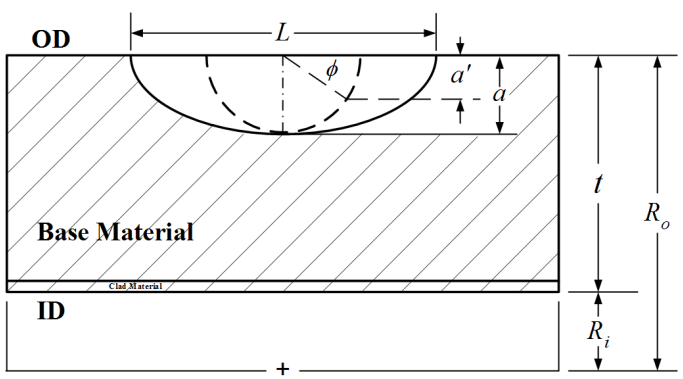

Influence coefficients, *K, have been calculated for finite-length semi-elliptical external-surface flaws with relative flaw depths of *a*/*t* = 0.1, 0.2, 0.3, 0.4, and 0.5 (with *L*/*a* = 2, 6, and 10), R_i/t = 20.**

External Infinite-Length Surface Flaws

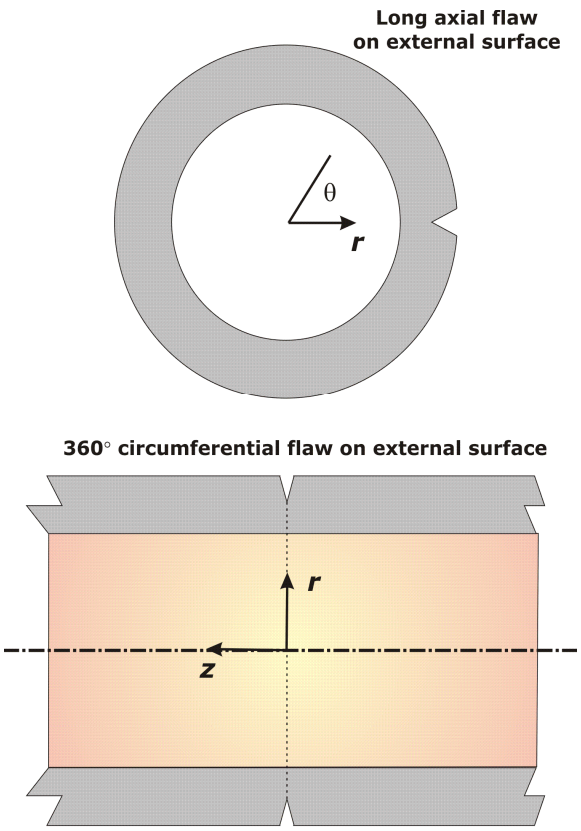

Influence coefficients, *K, have been calculated for axial and circumferential infinite-length external-surface flaws for *BWRs*.**

Linear Superposition Technique Used to Determine Infinite-length Flaw SIFICs

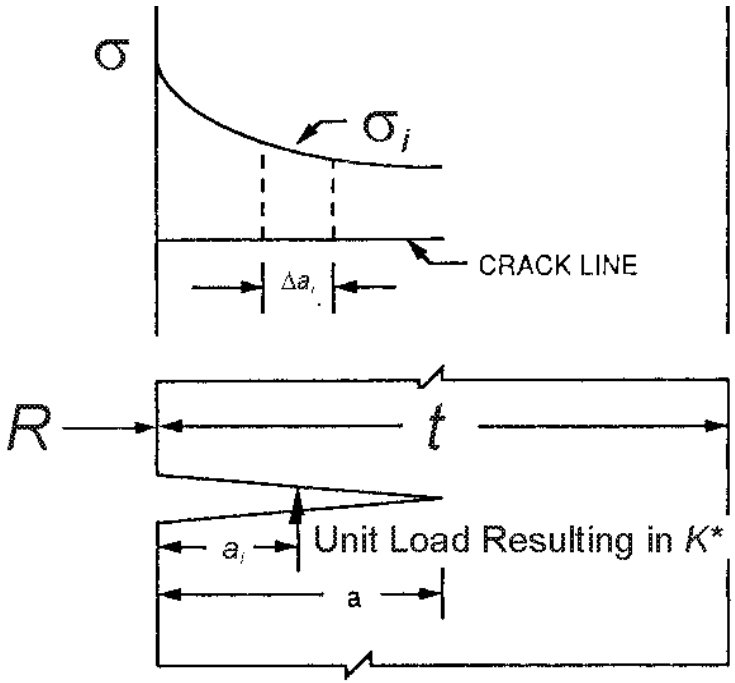

$$K_I(a)=\sum_{i=1}^{n}\sigma_i\,\Delta a_i\,K_I^*(a_i,a)$$

Influence coefficients, K*, represent stress intensity factor per unit load applied to the crack face.

Finite-element Models for External Infinite-length Flaws in BWR

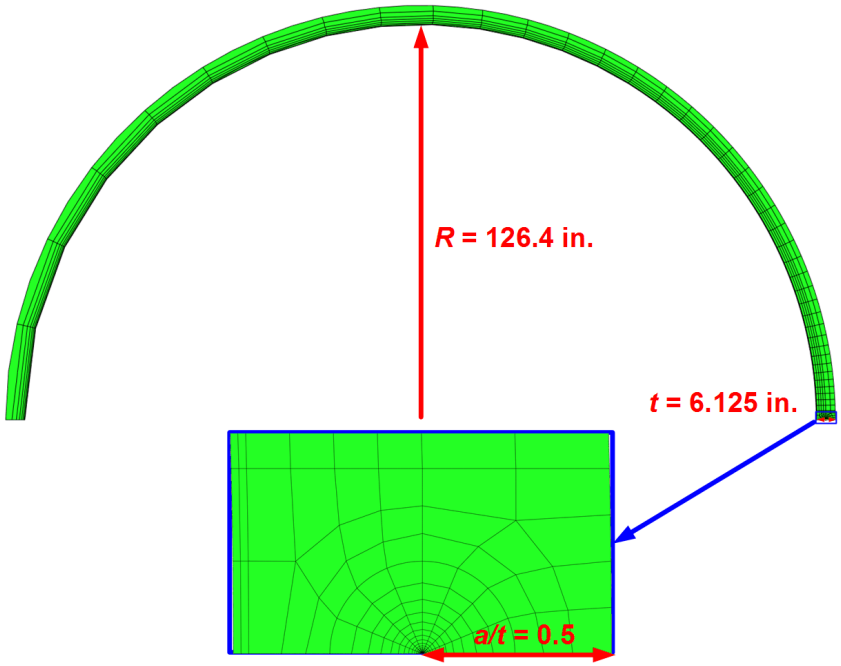

Finite-element model for infinite axial flaw on external surface of BWR (*Ri* /*t* = 20, *a*/*t* = 0.5)

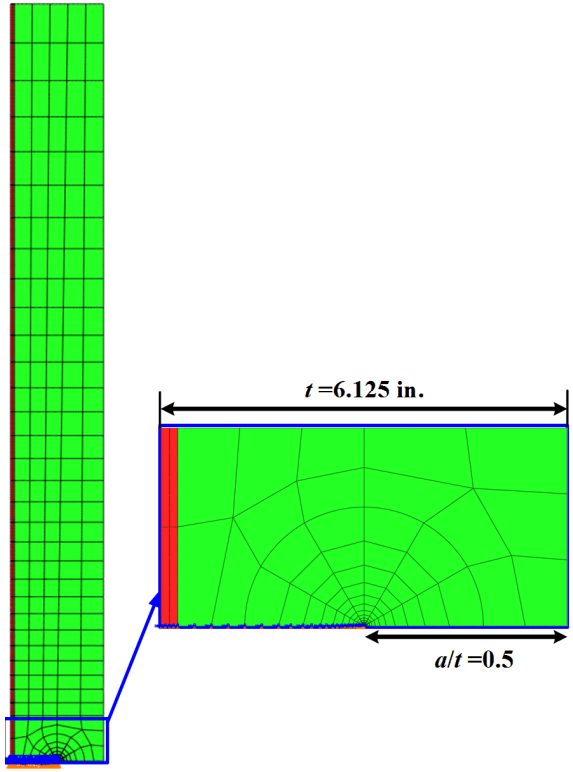

Finite-element model for 360º circumferential external-surface flaw for *Ri*/*t* = 20, *a*/*t* = 0.5.

Influence Coefficients for External Axial Infinite Surface Crack in BWR

a'/a	a/T = 0.01	a'/a	a/T = 0.02	a'/a	a/T = 0.03	a'/a	a/T = 0.05	a'/a	a/T = 0.075
0.1263	1.3469	0.1156	1.0302	0.1156	0.8553	0.1380	0.6756	0.1517	0.5716
0.2364	1.3512	0.2312	1.0283	0.2313	0.8533	0.2759	0.6740	0.3034	0.5686
0.3468	1.3614	0.3469	1.0311	0.3469	0.8550	0.4138	0.6784	0.4578	0.5722
0.4048	1.3788	0.4304	1.0418	0.4532	0.8652	0.5286	0.6937	0.5783	0.5896
0.4591	1.3986	0.5042	1.0612	0.5428	0.8873	0.6212	0.7223	0.6723	0.6198
0.5100	1.4241	0.5696	1.0880	0.6184	0.9195	0.6960	0.7621	0.7456	0.6630
0.5578	1.4559	0.6274	1.1236	0.6822	0.9628	0.7563	0.8139	0.8028	0.7192
0.6026	1.4950	0.6786	1.1686	0.7360	1.0173	0.8051	0.8777	0.8474	0.7886
0.6445	1.5433	0.7239	1.2231	0.7814	1.0831	0.8444	0.9543	0.8823	0.8726
0.6838	1.5990	0.7640	1.2883	0.8197	1.1615	0.8762	1.0449	0.9094	0.9728
0.7207	1.6673	0.7994	1.3645	0.8520	1.2531	0.9019	1.1510	0.9306	1.0919
0.7553	1.7463	0.8308	1.4544	0.8792	1.3608	0.9226	1.2754	0.9472	1.2327
0.7877	1.8401	0.8586	1.5606	0.9022	1.4871	0.9393	1.4209	0.9601	1.4009
0.8181	1.9541	0.8831	1.6866	0.9217	1.6360	0.9528	1.5926	0.9701	1.6021
0.8465	2.0900	0.9049	1.8383	0.9380	1.8144	0.9637	1.7973	0.9780	1.8481
0.8732	2.2602	0.9241	2.0244	0.9518	2.0304	0.9725	2.0431	0.9841	2.1520
0.8981	2.4752	0.9412	2.2602	0.9635	2.3007	0.9796	2.3475	0.9889	2.5434
0.9218	2.7633	0.9562	2.5684	0.9733	2.6478	0.9853	2.7357	0.9926	3.0699
0.9437	3.1684	0.9696	3.0016	0.9816	3.1242	0.9900	3.2525	0.9955	3.8377
0.9644	3.8153	0.9813	3.6754	0.9886	3.8383	0.9937	3.9987	0.9978	5.1601
0.9835	5.0853	0.9917	4.9976	0.9945	5.1216	0.9967	5.2431	1.0000	12.6594
1.0000	12.7060	1.0000	12.6985	1.0000	12.6924	1.0000	12.6879		

a'/a	a/T = 0.1	a'/a	a/T = 0.2	a'/a	a/T = 0.3	a'/a	a/T = 0.4	a'/a	a/T = 0.5
0.1263	0.5175	0.1735	0.4653	0.1735	0.5156	0.0884	0.6402	0.2056	0.8074
0.2366	0.5135	0.3469	0.4503	0.3469	0.4859	0.1769	0.6137	0.3581	0.7194
0.3469	0.5118	0.5322	0.4415	0.5323	0.4596	0.2653	0.5874	0.5105	0.6468
0.4991	0.5161	0.6649	0.4475	0.6651	0.4465	0.4739	0.5450	0.6248	0.5869
0.6160	0.5338	0.7601	0.4694	0.7603	0.4500	0.6233	0.4994	0.7126	0.5466
0.7059	0.5640	0.8283	0.5071	0.8285	0.4692	0.7304	0.4761	0.7801	0.5217
0.7749	0.6068	0.8772	0.5603	0.8774	0.5035	0.8072	0.4717	0.8319	0.5102
0.8280	0.6622	0.9122	0.6302	0.9124	0.5533	0.8622	0.4840	0.8717	0.5110
0.8688	0.7310	0.9373	0.7186	0.9375	0.6196	0.9017	0.5121	0.9024	0.5232
0.9001	0.8143	0.9553	0.8280	0.9555	0.7044	0.9299	0.5563	0.9259	0.5467
0.9242	0.9141	0.9682	0.9620	0.9684	0.8105	0.9502	0.6175	0.9440	0.5820
0.9427	1.0331	0.9774	1.1253	0.9777	0.9418	0.9647	0.6979	0.9579	0.6300
0.9569	1.1745	0.9840	1.3237	0.9843	1.1036	0.9751	0.8003	0.9685	0.6926
0.9678	1.3438	0.9888	1.5648	0.9891	1.3036	0.9826	0.9293	0.9768	0.7724
0.9762	1.5474	0.9922	1.8613	0.9925	1.5530	0.9879	1.0915	0.9831	0.8737
0.9827	1.7958	0.9946	2.2290	0.9949	1.8671	0.9917	1.2967	0.9879	1.0035
0.9876	2.1054	0.9964	2.6927	0.9967	2.2765	0.9945	1.5608	0.9916	1.1734
0.9915	2.5013	0.9976	3.2976	0.9979	2.8327	0.9964	1.9109	0.9945	1.4053
0.9944	3.0366	0.9985	4.1276	0.9988	3.6491	0.9979	2.4037	0.9967	1.7463
0.9966	3.8108	0.9992	5.3602	0.9994	5.0438	0.9989	3.1720	0.9984	2.3293
0.9984	5.1461	1.0000	12.6576	1.0000	12.6841	0.9996	4.6883	0.9997	3.8709
1.0000	12.6585					1.0000	12.2953	1.0000	12.6858

Influence coefficients, K^*, have been calculated for infinite-length axial external-surface flaws with relative flaw depths of a/t = 0.01, 0.02, 0.03, 0.05, 0.075, 0.1, 0.2, 0.3, 0.4, 0.5, 0.6, 0.7, 0.8, 0.9, and 0.95, R_i/t = 20.

Influence Coefficients for External 360º Circumferential Surface Crack in BWR

a'/a	a/T = 0.01	a'/a	a/T = 0.02	a'/a	a/T = 0.03	a'/a	a/T = 0.05	a'/a	a/T = 0.075
0.0884	0.9212	0.1156	0.7587	0.1156	0.6466	0.1030	0.5163	0.1156	0.4360
0.1769	0.9306	0.2312	0.7599	0.2313	0.6466	0.2061	0.5161	0.2313	0.4343
0.2653	0.9404	0.3469	0.7644	0.3469	0.6491	0.3092	0.5167	0.3469	0.4341
0.3306	0.9512	0.4414	0.7748	0.4531	0.6571	0.4122	0.5205	0.4663	0.4379
0.3919	0.9661	0.5230	0.7950	0.5427	0.6752	0.5194	0.5303	0.5644	0.4497
0.4494	0.9846	0.5935	0.8220	0.6184	0.7005	0.6075	0.5502	0.6451	0.4675
0.5032	1.0073	0.6546	0.8572	0.6822	0.7341	0.6800	0.5772	0.7113	0.4920
0.5538	1.0364	0.7072	0.9016	0.7360	0.7767	0.7394	0.6121	0.7658	0.5236
0.6011	1.0727	0.7527	0.9544	0.7814	0.8279	0.7884	0.6555	0.8106	0.5623
0.6455	1.1152	0.7921	1.0168	0.8197	0.8889	0.8286	0.7075	0.8474	0.6087
0.6871	1.1660	0.8260	1.0896	0.8520	0.9599	0.8617	0.7688	0.8777	0.6636
0.7259	1.2260	0.8553	1.1744	0.8792	1.0434	0.8889	0.8407	0.9026	0.7286
0.7626	1.2977	0.8806	1.2734	0.9022	1.1411	0.9112	0.9248	0.9230	0.8056
0.7967	1.3835	0.9026	1.3892	0.9217	1.2561	0.9296	1.0235	0.9399	0.8973
0.8288	1.4864	0.9215	1.5288	0.9380	1.3940	0.9447	1.1402	0.9537	1.0078
0.8590	1.6148	0.9379	1.6961	0.9518	1.5608	0.9571	1.2791	0.9650	1.1443
0.8874	1.7798	0.9520	1.9042	0.9635	1.7697	0.9673	1.4484	0.9744	1.3167
0.9138	1.9971	0.9642	2.1709	0.9733	2.0364	0.9757	1.6598	0.9820	1.5455
0.9384	2.3073	0.9748	2.5345	0.9816	2.4040	0.9825	1.9299	0.9884	1.8705
0.9619	2.8028	0.9839	3.0741	0.9886	2.9538	0.9882	2.3033	0.9935	2.3957
0.9835	3.8248	0.9917	4.0237	0.9945	3.9444	0.9929	2.8676	0.9978	3.5422
1.0000	9.7845	1.0000	9.7816	1.0000	9.7746	0.9967	3.8932	1.0000	9.7259
						1.0000	9.7621		

a'/a	a/T = 0.1	a'/a	a/T = 0.2	a'/a	a/T = 0.3	a'/a	a/T = 0.4	a'/a	a/T = 0.5
0.1735	0.3897	0.1735	0.3367	0.1735	0.3501	0.1327	0.3952	0.2061	0.4479
0.3469	0.3871	0.3469	0.3271	0.3469	0.3317	0.2653	0.3726	0.4122	0.3976
0.5203	0.3911	0.5205	0.3220	0.5323	0.3166	0.4739	0.3451	0.5791	0.3568
0.6477	0.4095	0.6481	0.3277	0.6651	0.3121	0.6233	0.3230	0.6987	0.3325
0.7413	0.4401	0.7419	0.3433	0.7603	0.3191	0.7304	0.3150	0.7844	0.3227
0.8102	0.4837	0.8107	0.3691	0.8285	0.3375	0.8072	0.3195	0.8458	0.3255
0.8607	0.5404	0.8614	0.4050	0.8774	0.3667	0.8622	0.3352	0.8898	0.3398
0.8979	0.6111	0.8986	0.4516	0.9124	0.4071	0.9017	0.3616	0.9213	0.3650
0.9252	0.6971	0.9259	0.5098	0.9375	0.4596	0.9299	0.3993	0.9439	0.4017
0.9453	0.8006	0.9460	0.5813	0.9555	0.5259	0.9502	0.4491	0.9601	0.4506
0.9600	0.9245	0.9608	0.6683	0.9684	0.6081	0.9647	0.5129	0.9718	0.5134
0.9709	1.0720	0.9717	0.7735	0.9777	0.7092	0.9751	0.5929	0.9801	0.5925
0.9788	1.2482	0.9796	0.9013	0.9843	0.8333	0.9826	0.6925	0.9860	0.6913
0.9847	1.4586	0.9855	1.0570	0.9891	0.9862	0.9879	0.8170	0.9903	0.8149
0.9890	1.7115	0.9898	1.2487	0.9925	1.1766	0.9917	0.9738	0.9934	0.9705
0.9922	2.0180	0.9930	1.4895	0.9949	1.4160	0.9945	1.1748	0.9956	1.1702
0.9945	2.3931	0.9953	1.8001	0.9967	1.7279	0.9964	1.4409	0.9972	1.4345
0.9962	2.8561	0.9970	2.2208	0.9979	2.1512	0.9979	1.8147	0.9983	1.8068
0.9974	3.4611	0.9983	2.8381	0.9988	2.7723	0.9989	2.3969	0.9991	2.3861
0.9984	4.2784	0.9992	3.8949	0.9994	3.8329	0.9996	3.5449	0.9997	3.5286
1.0000	9.7134	1.0000	9.6677	1.0000	9.6415	1.0000	9.3011	1.0000	9.5506

Influence coefficients, K^*, have been calculated for external 360º circumferential surface flaws with relative flaw depths of a/t = 0.01, 0.02, 0.03, 0.05, 0.075, 0.1, 0.2, 0.3, 0.4, 0.5, 0.6, 0.7, 0.8, 0.9, and 0.95, R_i/t = 20.

Complete SIFIC Database for Generalized FAVOR, v09.1

(Ri / t)	application	Inner-surface breaking flaws				Outer-surface breaking flaws			
		aspect ratio				aspect ratio			
		2	6	10	infinite	2	6	10	infinite
type of analysis		Initiation			Thru-wall	Initiation			Thru-wall
10	PWR	SIFIC databases completely generated, implemented, and validated. Previous versions of FAVOR limited to inner surface breaking flaws for PWR geometries				SIFIC databases generated, implemented, and validated			SIFIC databases generated, implemented, and validated
10 < (Ri / t) < 20	BWR	interpolative routine successfully developed for semielliptical and infinite length flaws				interpolative routine successfully developed for semielliptical and infinite length flaws			
20	BWR	SIFIC databases completely generated, implemented, and validated				SIFIC databases generated, implemented, and validated			SIFIC databases generated, implemented and validated

Reported in the paper

Summary

- Complete SIFIC database were developed for surface flaws often utilized in fracture analyses of BWRs and PWRs;
- The complete SIFIC database have been implemented, and validated in the new version of FAVOR, v09.1;
- FAVOR 09.1 has the capability to perform PFM analyses on PWRs and BWRs for heat-up and/or cool-down transients in which the RPVs contain embedded and/or surface breaking (inner surface breaking/external surface breaking/or both);
- The generalized version of FAVOR will be a baseline tool in the project to determine if a risk-informed technical basis can be established to provide a relaxation to the current regulations for normal transients associated with reactor start-up and shutdown.