A GENERALIZATION OF THE FAVOR CODE TO INCLUDE BWR GEOMETRIES AND HEAT-UP TRANSIENTS

paper number PVP2009 -77106

Terry Dickson, Sean Yin, Paul Williams,

Computational Sciences and Engineering Division
Oak Ridge National Laboratory

ASME 2009 Pressure Vessel and Piping Conference
July, 2009 - Prague, The Czech Republic

Basic Flaw Information in context of

Capabilities of Previous Versions of FAVOR

Previous versions of FAVOR, and its predecessors, were designed to perform analysis of cool-down transients in PWRs (PTS)

During cool-down transients, tensile stress are in the inner part of RPV wall thickness; therefore, previous versions of FAVOR were hardwired to include only those embedded flaws near RPV inner surface (inner 3/8 of base metal thickness) and inner surface breaking flaws

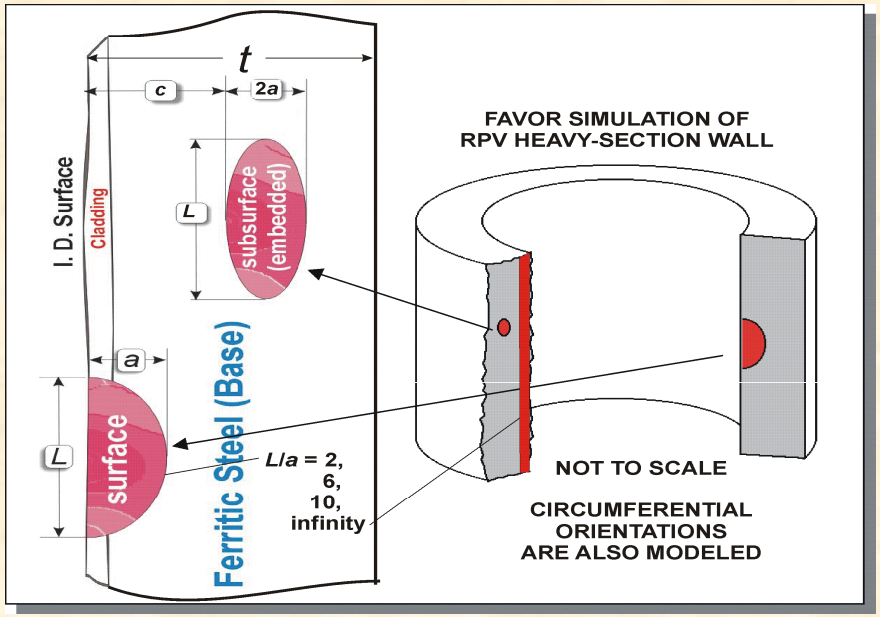

A previous version of FAVOR^{HT} was designed to perform analyses of heat-up transients

During heat-up transients, tensile stress are in the outer part of wall thickness; therefore, FAVOR^{HT} was hardwired to include only embedded flaws near RPV outer surface (outer 3/8 of base metal thickness)

FAVOR^{HT} had no external flaw modeling capability

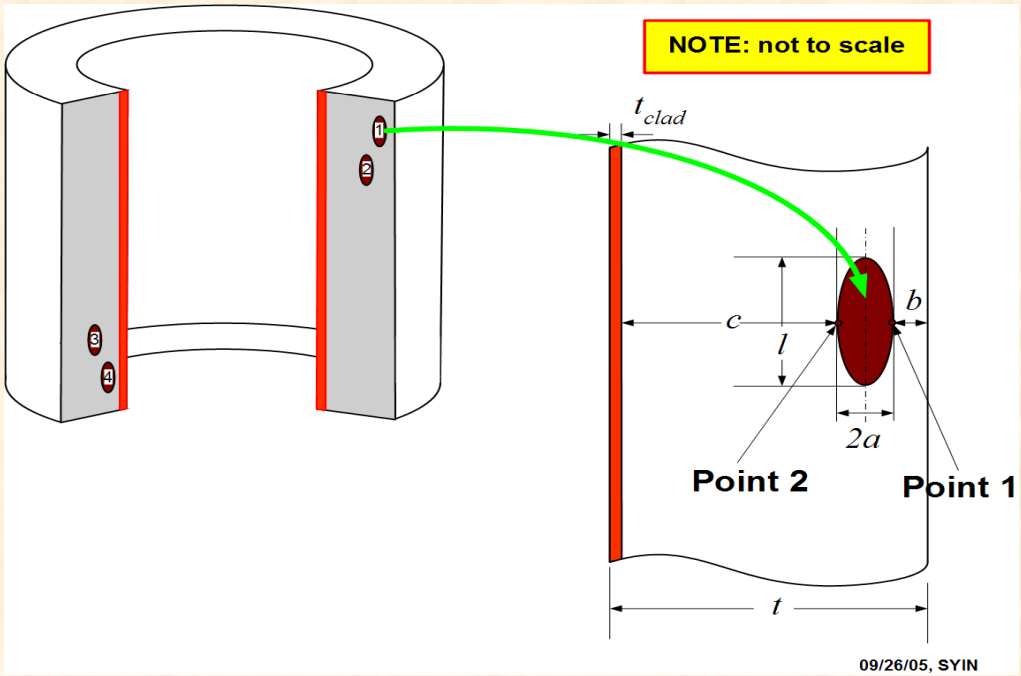

FAVOR Utilizes Stress Intensity Factor Influence Coefficients (SIFICs) and Linear Superposition to Calculate applied K_I for Surface Breaking Flaws

Previous versions of FAVOR were limited to SIFICs for 8 Internal Surface Breaking Flaw Geometries; all applicable to PWRs (Ri / t = 10)

Flaw type	Aspect ratio	Surface breaking	Orientation	Ri / t
1	2	Internal	Axial	10
2	6	Internal	Axial	10
3	10	Internal	Axial	10
4	Infinite	Internal	Axial	10
5	2	Internal	Circumferential	10
6	6	Internal	Circumferential	10
7	10	Internal	Circumferential	10
8	Infinite	Internal	Circumferential	10

Expansion of Flaw Modeling Capabilities in FAVOR

Our aim is to development a technical basis for risk-informed revision of ASME Code Section XI – Appendix G:

regulations associated with reactor start-up (cool-down), shutdown (heat-up), and hydro-test

Need risk-informed analysis capability for cool-down and heat-up of BWRs and PWRs

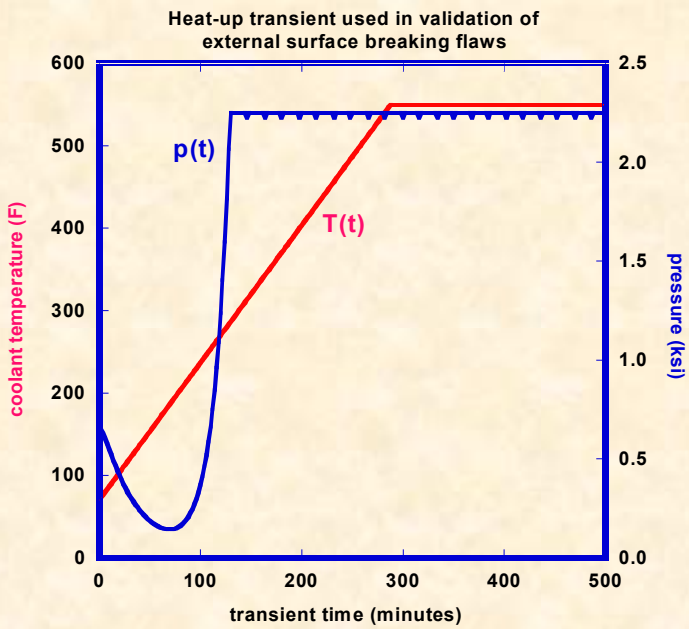

Parameterized cool-down transient for PWR

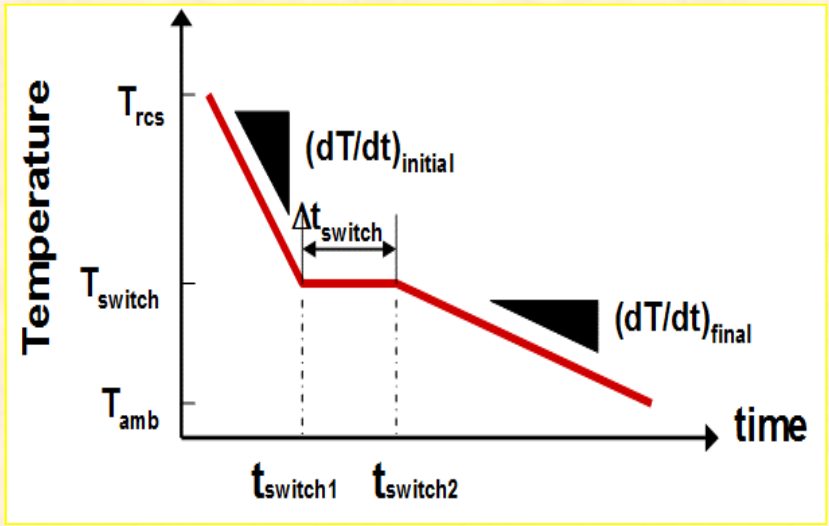

The objective of FAVOR 09.1 is to have the capability to perform deterministic / risk-informed probabilistic fracture analyses for cool-down and heat-up transients for BWR and PWR vessel geometries

FAVOR CODE STRUCTURE

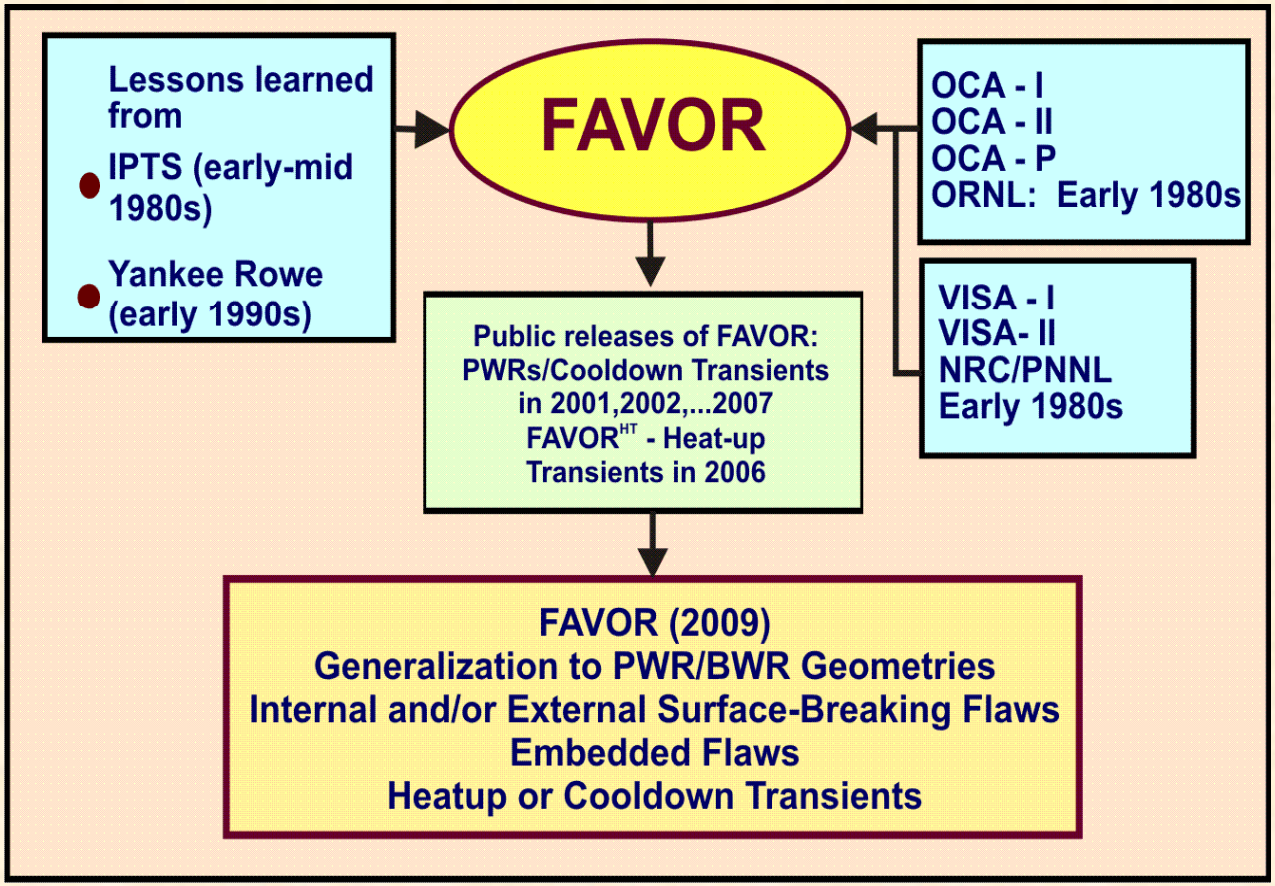

FAVOR 09.1 consolidates and expands the embedded flaw modeling capabilities of FAVOR and FAVOR^{HT}

FAVOR 09.1 can include embedded flaws at any thru-wall location

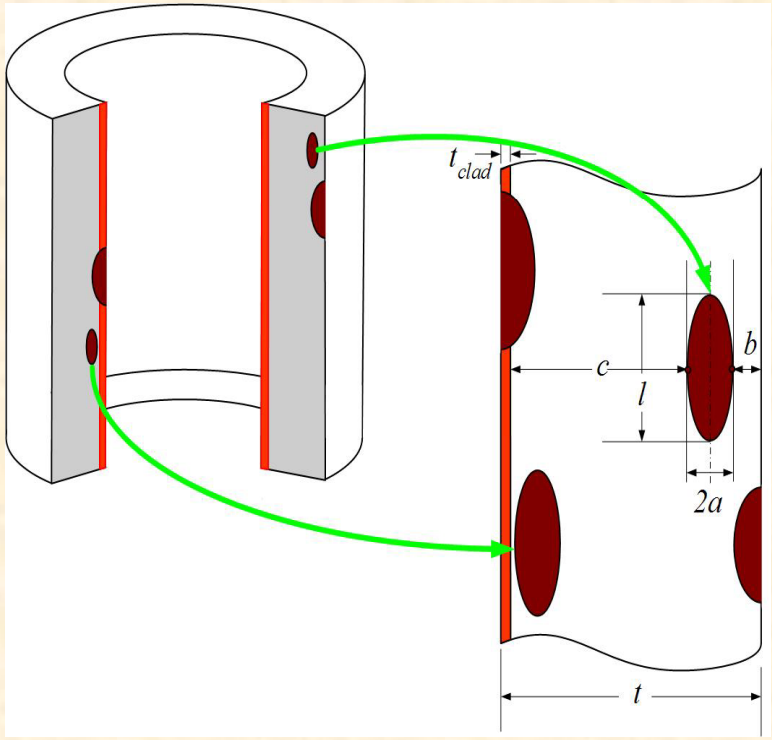

New databases of SIFICs for external flaws in BWRs (Ri / t ~ 20) (paper PVP 2009-77143) **and PWRs (Ri / t ~ 10) facilitates calculation of *applied KI for external surface-breaking flaws***

applicable for finite length (aspect ratio 2, 6, 10) and infinite length external surface breaking flaws

both axially and circumferentially oriented

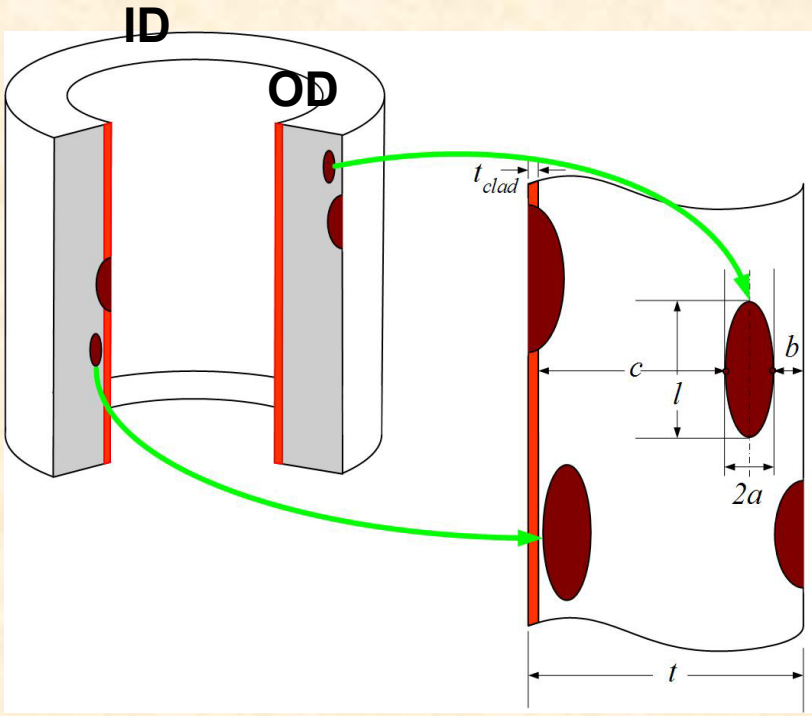

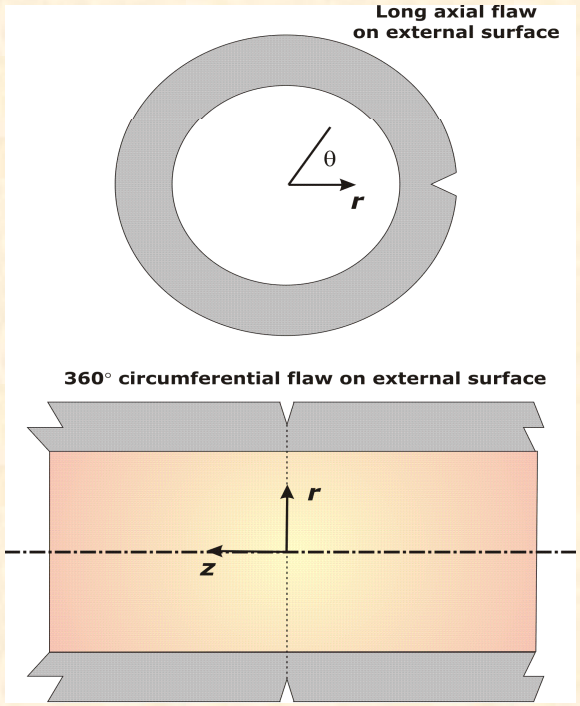

FAVOR 09.1 will have capability to calculate *applied* K_I for internal and external surface breaking flaws for all relevant RPV geometries

PWR SIFIC databases

Flaw type	Aspect ratio	Surface breaking	Orientation	Ri / t
1	2	Internal	Axial	10
2	6	Internal	Axial	10
3	10	Internal	Axial	10
4	Infinite	Internal	Axial	10
5	2	Internal	Circumferential	10
6	6	Internal	Circumferential	10
7	10	Internal	Circumferential	10
8	Infinite	Internal	Circumferential	10
9	2	External	Axial	10
10	6	External	Axial	10
11	10	External	Axial	10
12	Infinite	External	Axial	10
13	2	External	Circumferential	10
14	6	External	Circumferential	10
15	10	External	Circumferential	10
16	Infinite	External	Circumferential	10

BWR SIFIC databases

Flaw type	Aspect ratio	Surface breaking	Orientation	Ri / t
1	2	Internal	Axial	20
2	6	Internal	Axial	20
3	10	Internal	Axial	20
4	Infinite	Internal	Axial	20
5	2	Internal	Circumferential	20
6	6	Internal	Circumferential	20
7	10	Internal	Circumferential	20
8	Infinite	Internal	Circumferential	20
9	2	External	Axial	20
10	6	External	Axial	20
11	10	External	Axial	20
12	Infinite	External	Axial	20
13	2	External	Circumferential	20
14	6	External	Circumferential	20
15	10	External	Circumferential	20
16	Infinite	External	Circumferential	20

Red entries – new to FAVOR 09.1 - factor of 4 more SIFIC databases than previous versions of FAVOR

Most of the US domestic BWR vessels have an internal radius to wall thickness (R_i / t) ratio of approx 20; although a few are between 15 and 20

algorithms have been developed and verified such that the SIFIC databases for (R_i / t) = 10 and BWR geometry (R_i / t) = 20 for internal and external surface breaking flaws are appropriately interpolated for application to RPVs for which 10 < R_i / t < 20

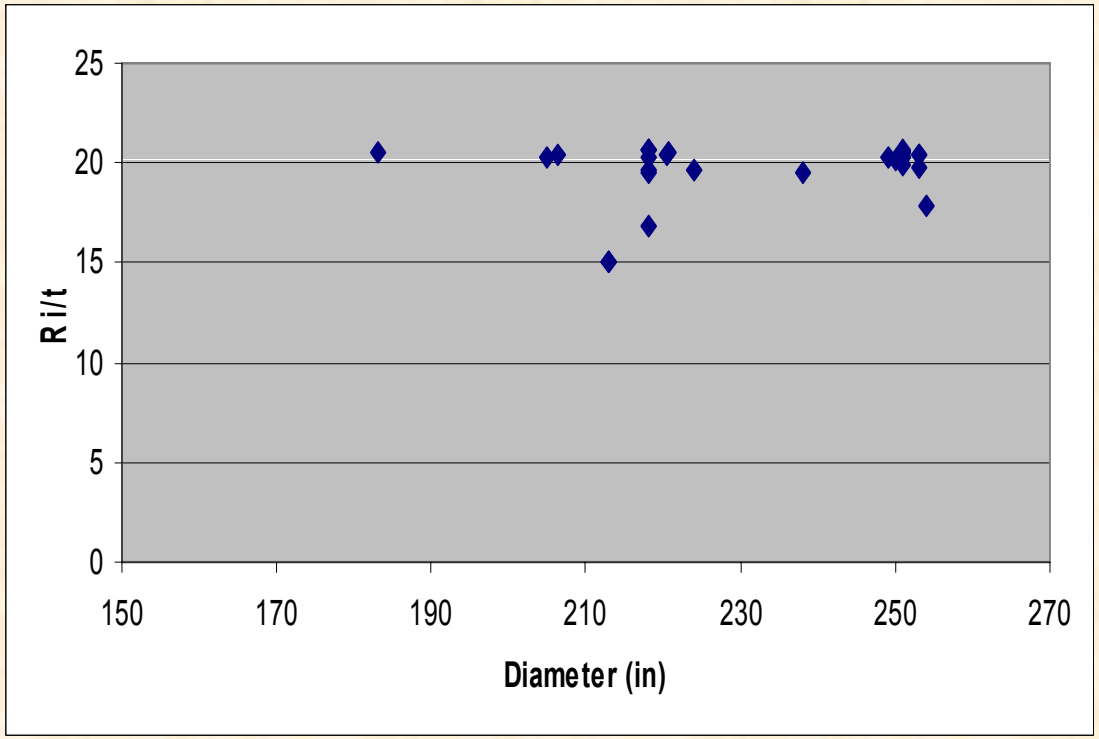

FAVOR 09.1 will have three user-option flaw populations to choose from when performing PFM analysis – to meet NRC research needs

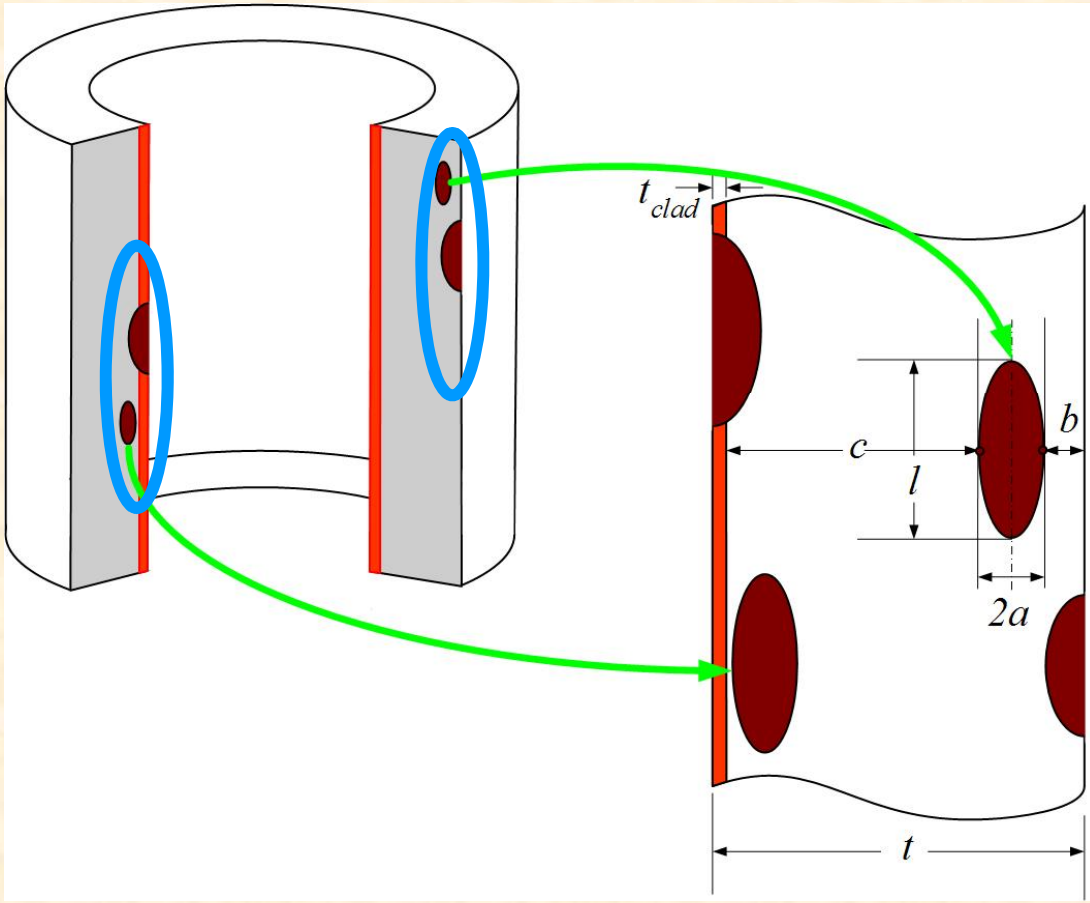

- Option 1 – RPV Model includes external surface-breaking flaws and embedded flaws near outer surface - vulnerable to heat-up transients
- Option 2 – RPV Model includes internal surface-breaking flaws and embedded flaws near inner surface - relevant to cool-down transients **(Like previous versions of FAVOR)**
- Option 3 – RPV model includes all thru-wall embedded flaws, internal and external surface breaking flaws: could be relevant to loading conditions in which membrane stresses are dominant, hydro-testing, etc.

09.1 FAVOR flaw orientation assumptions :

(1) embedded flaws in axial welds are axially oriented
(2) embedded flaws in circ welds are circ oriented
(3) embedded flaws in plates – 50% are axial and 50% are circ

All Inner-surface breaking flaws are circumferentially oriented
External-surface breaking flaws in axial welds are axially oriented
External-surface breaking flaws in circf welds are circf oriented
External-surface breaking flaws in plate – 50% are axial and 50% are circf

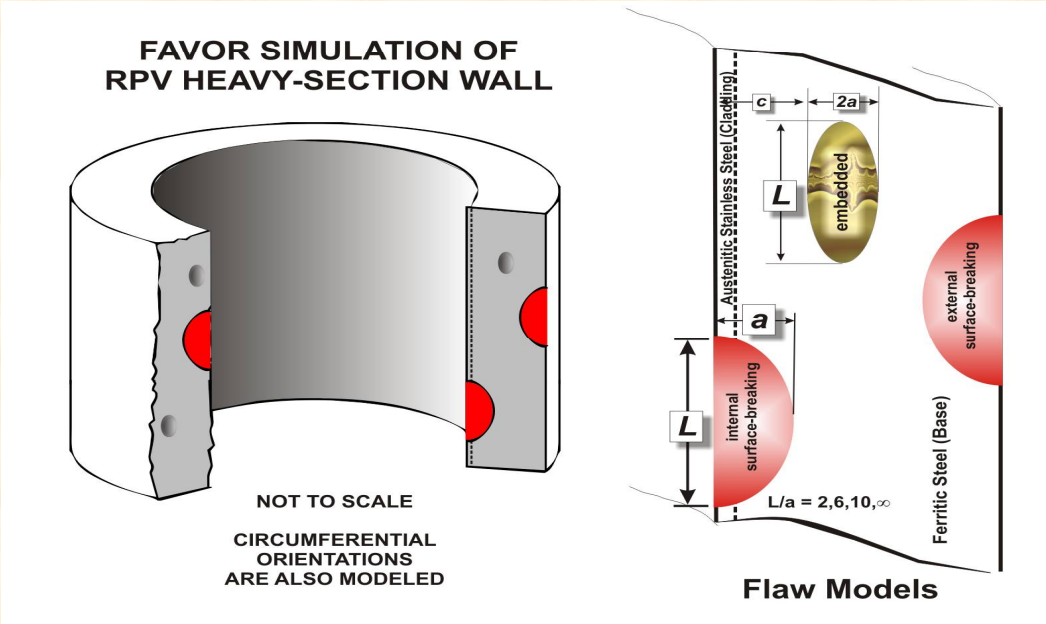

Verification of *applied* K_I solutions for various external surface breaking flaw geometries in BWR geometries subjected to heat-up transients is on-going

Successful comparison against ABAQUS solutions

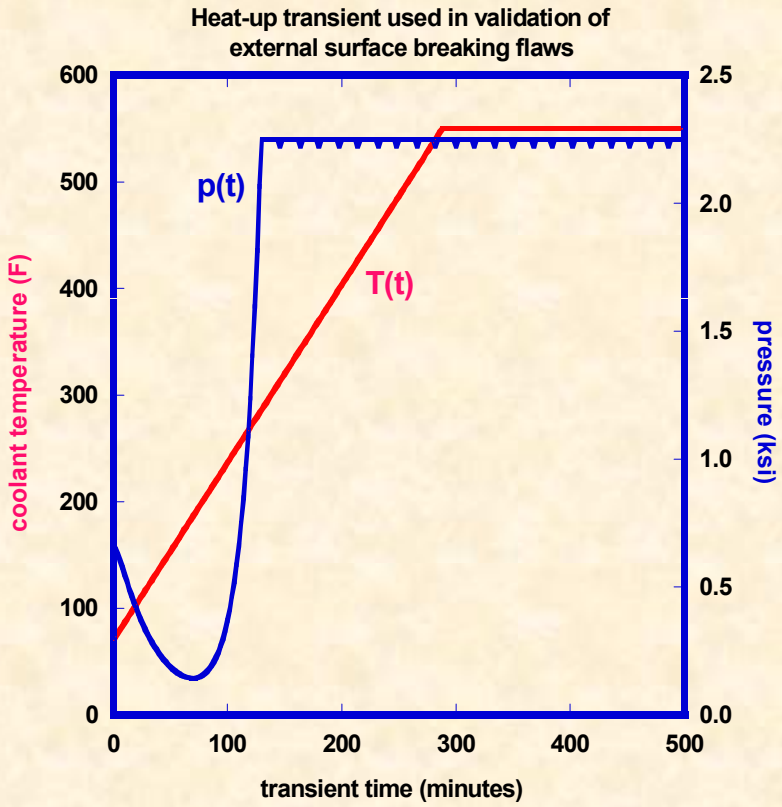

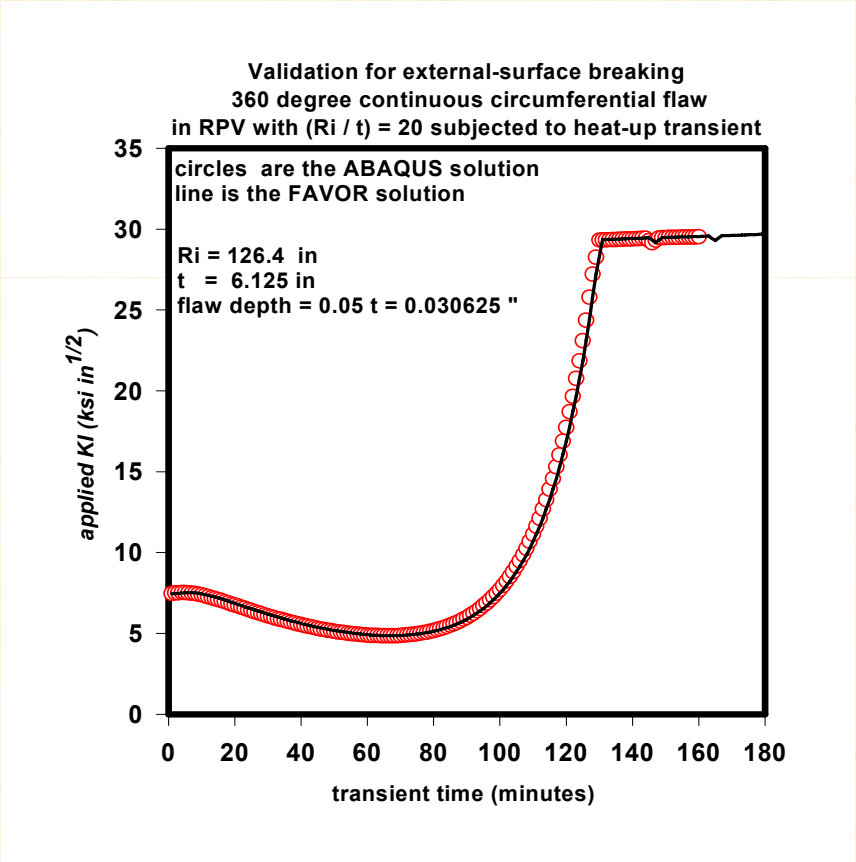

Summary

ORNL is consolidating and expanding capabilities of previous versions of FAVOR and FAVOR^{HT} in FAVOR 09.1

SIFIC databases increased by factor of 4

FAVOR 09.1 will have the ability to perform fracture analyses for various combinations of flaw populations

(1) inner-surface breaking flaws

(2) external surface breaking flaws

(3) embedded flaws at any RPV thru-wall location

FAVOR 09.1 will have the ability to perform deterministic and risk-informed PFM analyses of PWRs or BWRs subjected to cool-down and heat-up transients

FAVOR 09.1 will also have 2 additional warm pre-stress option (paper PVP2009-77127)