MITSUBISHI HEAVY INDUSTRIES, LTD.
16-5, KONAN 2-CHOME, MINATO-KU
TOKYO, JAPAN

July 31, 2009

Document Control Desk
U.S. Nuclear Regulatory Commission
Washington, DC 20555-0001

Attention: Mr. Jeffery A. Ciocco

Docket No. 52-021
MHI Ref: UAP-HF-09410

Subject: Amended MHI's Responses to US-APWR DCD RAI No. 343-2208 Revision 0

References: 1) "Request for Additional Information No. 343-2208 Revision 0, SRP Section: 09.02.02 – Reactor Auxiliary Cooling Water System, Application Section: 9.2.7" dated April 23, 2009.
2)" MHI's Response to US-APWR DCD RAI No. 343-2208 Revision 0, UAP-HF-09350, dated July 17, 2009"

With this letter, Mitsubishi Heavy Industries, Ltd. ("MHI") transmits to the U.S. Nuclear Regulatory Commission ("NRC") a document entitled "Amended Responses to Request for Additional Information No. 343-2208 Revision 0."

Enclosed is the response to one question of the RAI (Reference 1).

This response amend the previously transmitted answers submitted under MHI Reference UAP-HF-09350 on July 17, 2009 (Reference 2) in order to correct lack of figures.

Please contact Dr. C. Keith Paulson, Senior Technical Manager, Mitsubishi Nuclear Energy Systems, Inc. if the NRC has questions concerning any aspect of this submittal. His contact information is provided below.

Sincerely,

Y. Ogata

Yoshiki Ogata,
General Manager- APWR Promoting Department
Mitsubishi Heavy Industries, LTD.

Enclosures:

1. Amended Response to Request for Additional Information No. 343-2208, Revision 0

D081
NRO

CC: J. A. Ciocco
C. K. Paulson

Contact Information
C. Keith Paulson, Senior Technical Manager
Mitsubishi Nuclear Energy Systems, Inc.
300 Oxford Drive, Suite 301
Monroeville, PA 15146
E-mail: ck_paulson@mnes-us.com
Telephone: (412) 373-6466

Enclosure 1

UAP-HF-09410
Docket Number 52-021

Amended Response to Request for Additional Information No. 343-2208, Revision 0

July, 2009

RESPONSE TO REQUEST FOR ADDITIONAL INFORMATION

07/31/2009

US-APWR Design Certification

Mitsubishi Heavy Industries

Docket No. 52-021

RAI NO.:	**NO.343-2208 REVISION 0**
SRP SECTION:	**09.02.02 – Reactor Auxiliary Cooling Water System**
APPLICATION SECTION:	**Tier 2 DCD Section 9.2.7**
DATE OF RAI ISSUE:	**04/23/2009**

QUESTION NO. : 09.02.02-4

Standard Review Plan (SRP) Section 9.2.2, which is being utilized as guidance for the review of the chilled water system, specifies in Section III confirmation of the overall arrangement of the system. The staff noted that Tier 1 Design Control Document (DCD), Figure 2.7.3.5-1 (sheets 1 and 2) and Tier 2, DCD Figure 9.2.7-1 (sheets 1 and 2) have inaccurate and incomplete information related to safety-related to non-safety piping interfaces.

- Essential chilled water system equipment classification breaks were not found on the Tier 1 or Tier 2 system diagrams. This needs to be clarified in the DCD to the exact location of the safety-related to non-safety-related class break and seismic classifications. For example, the class breaks are shown at the support systems for the compression tank (water and nitrogen) and relief valve on top of the compression tank.
- Non-essential chilled water system diagrams in Tier 1 and Tier 2 are missing. All the system loads need to appear on the flow diagram. Equipment classification breaks are needed at the containment valves and penetrations.
- For Tier 1, DCD Figure 2.7.3.5-1, there is a "3" inside the box at four locations; this needs to be explained.
- For Tier 1, DCD Figure 2.7.3.5-1, there is no cooling water flow shown for the chiller unit (four locations missing). There are no support systems shown for the compression tank.

ANSWER:

A "3" inside the box in Tier 1, DCD Figure 2.7.3.5-1 intends the ASME code class of the essential chilled water system piping. MHI will revise the flow diagram to remove the confusion, and to incorporate information on the ASME code classification breaks in accordance with DCD Tire1, Section 1.5. The cooling water flow for the chiller unit and support systems shown will be added in Figure 2.7.3.5-1.

MHI will also revise the Tier 2 DCD Figure 9.2.7-1 (sheets 1 and 2) to add the classification boundary between safety-related and non-safety related.

With exception of the containment penetration pipe line and containment isolation valves, and system boundary isolation valves between component cooling water system (CCW) and the Non-ECWS, the Non-essential chilled water system is designed as non-safety related system. The configuration of the containment penetration piping and the containment isolation valves is shown in DCD tier 1, Figure 2.11.2-1 Containment Isolation Valves Basic Configuration. The system boundary isolation valves are provided to manually align the component cooling water (CCW) to the containment fan cooler units in order to mitigate the containment failure during a severe accident. MHI will add the Non-essential chilled water system flow diagrams to clarify the system boundaries with other systems.

Impact on DCD

Tier 1, Figure 2.7.3.5-1 and Tier 2, DCD Figure 9.2.7-1 will be revised. And non-essential chilled water system flow diagram will be added in Tier 1 and Tier 2.

Tier 1 Subsection 2.7.3.6.1 will be revised as follow and Table 2.7.3.6-1 will be added:

> **"Location and Functional Arrangement**
>
> **The functional arrangement of Non-ECWS component is shown in Figure 2.7.3.6-1. Table 2.7.3.6-1 also provides a tabulation of the location of the safety components.** The major components of the non-ECWS are located in the auxiliary building. The non-ECWS consists of factory packaged chiller units, chilled water pumps, condenser water pumps and a compression tank."

Tier 2 Subsection 9.2.7.2.1.2 will be revised to add the following:

> "The non-essential chilled water system flow diagram is shown in Figure 9.2.7-2."

Figures and Tables are found in next 11 pages.

Impact on COLA

There is no impact on the COLA.

Impact on PRA

There is no impact on the PRA.

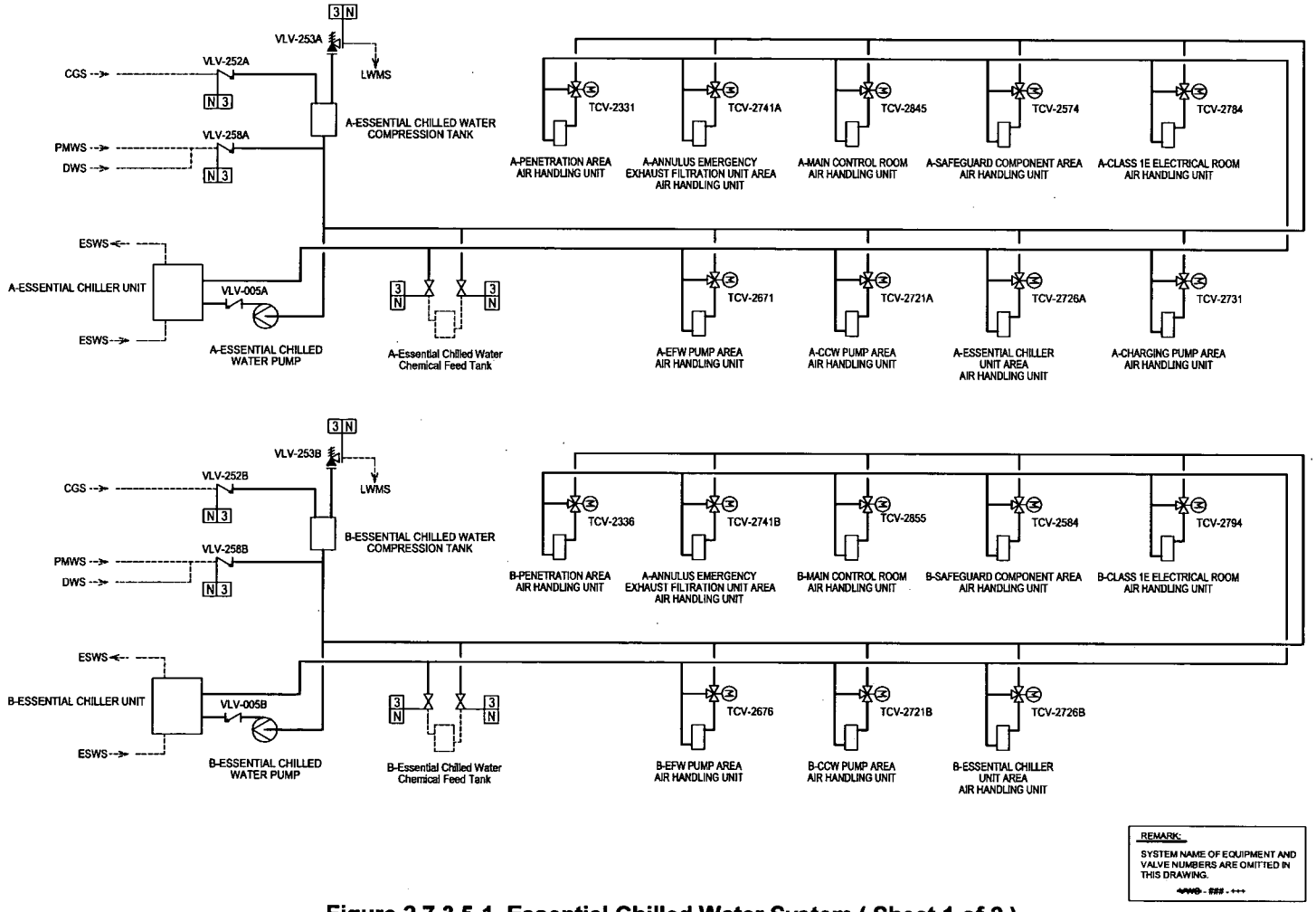

Figure 2.7.3.5-1 Essential Chilled Water System (Sheet 1 of 2)

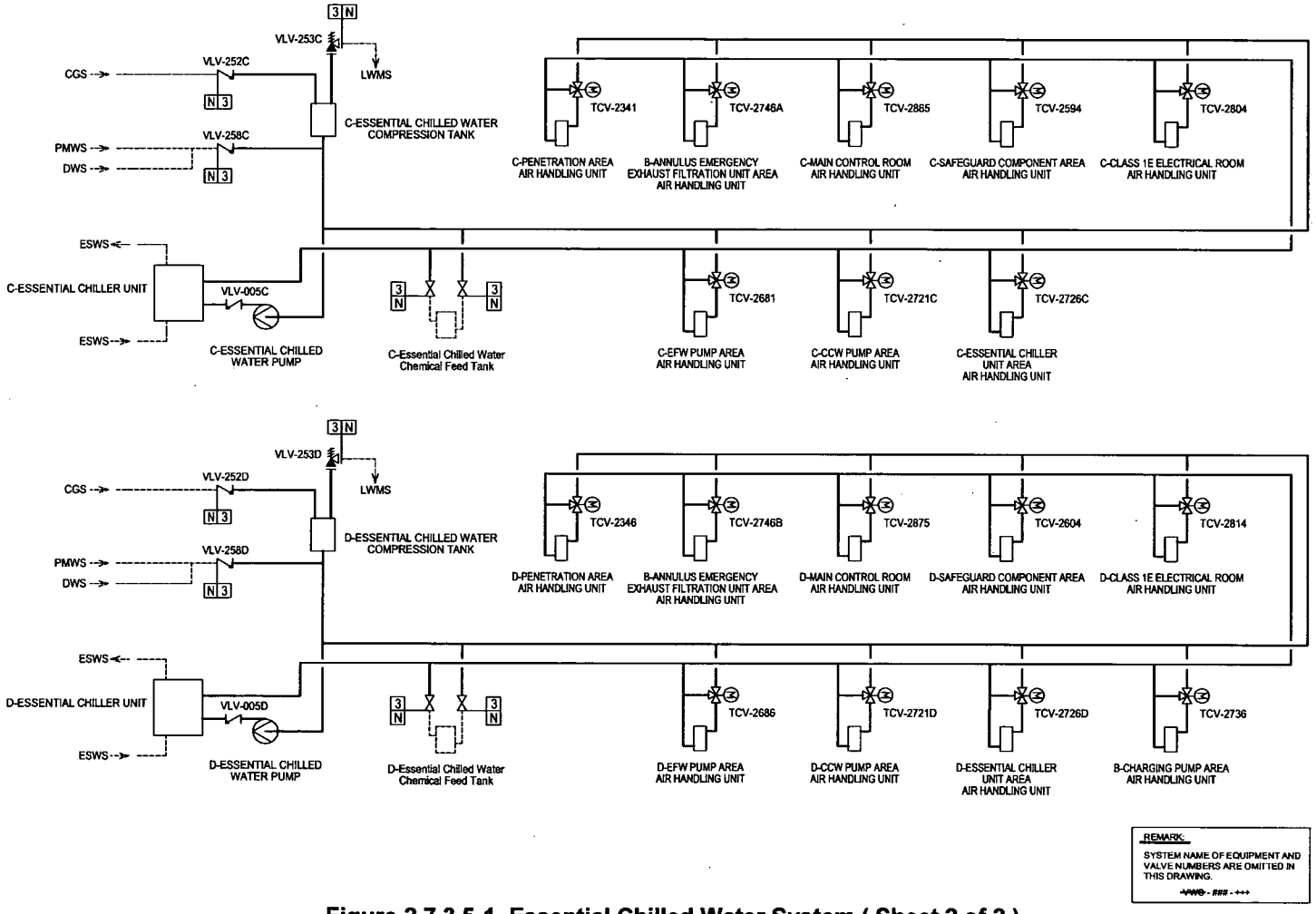

Figure 2.7.3.5-1 Essential Chilled Water System (Sheet 2 of 2)

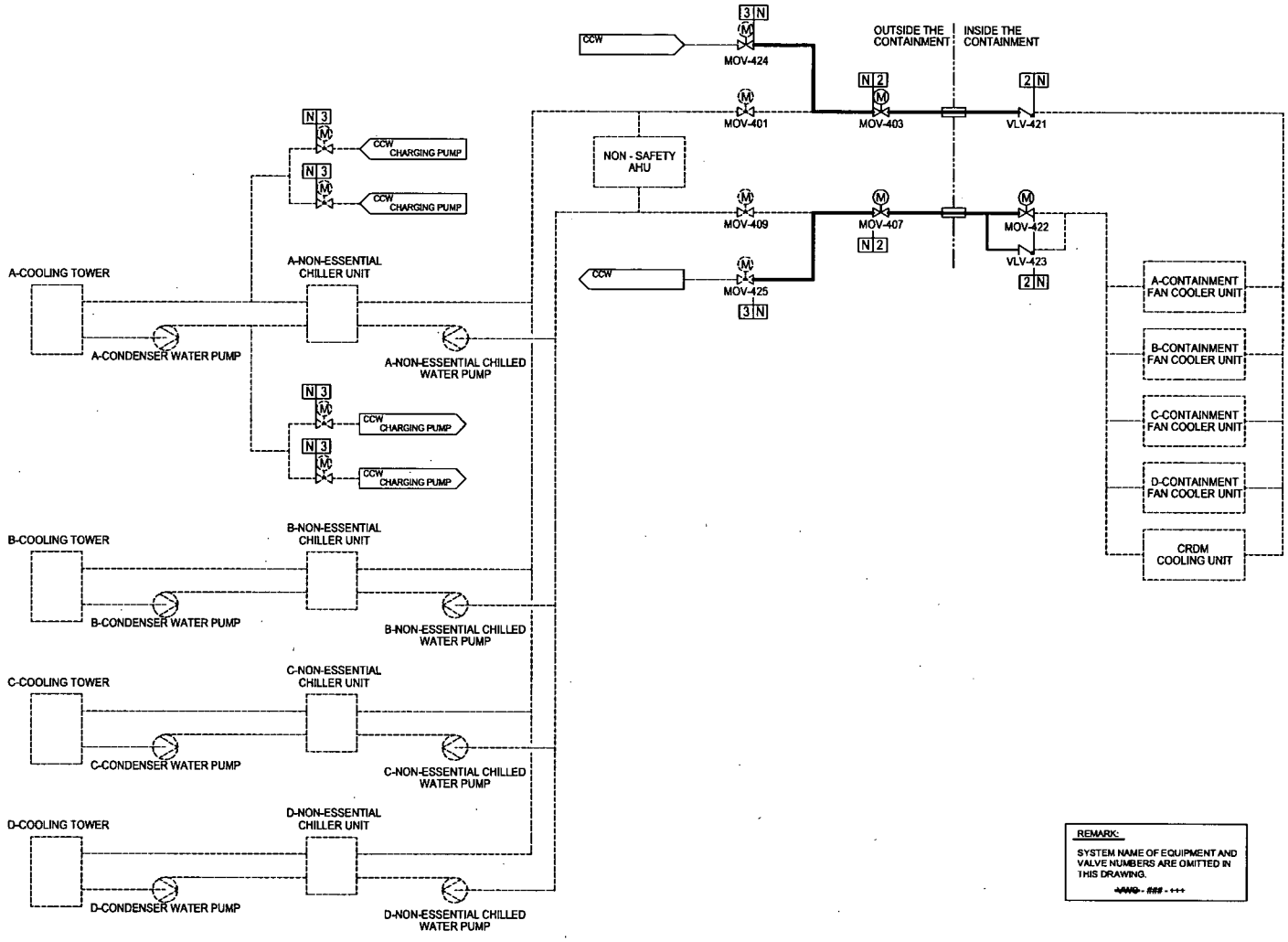

Figure 2.7.3.6-1 Non-Essential Chilled Water System

Table 2.7.3.6-1 Non-Essential Chilled Water System Location of Equipment and Piping

System and Components	Location
Non-Essential chilled water system piping and valves between and including the containment isolation valves, VWS-MOV-403,-407, -422 and VWS-VLV-421, -423.	Containment Reactor Building
CCW supply line isolation valves, VWS-MOV-424, -425	Reactor Building

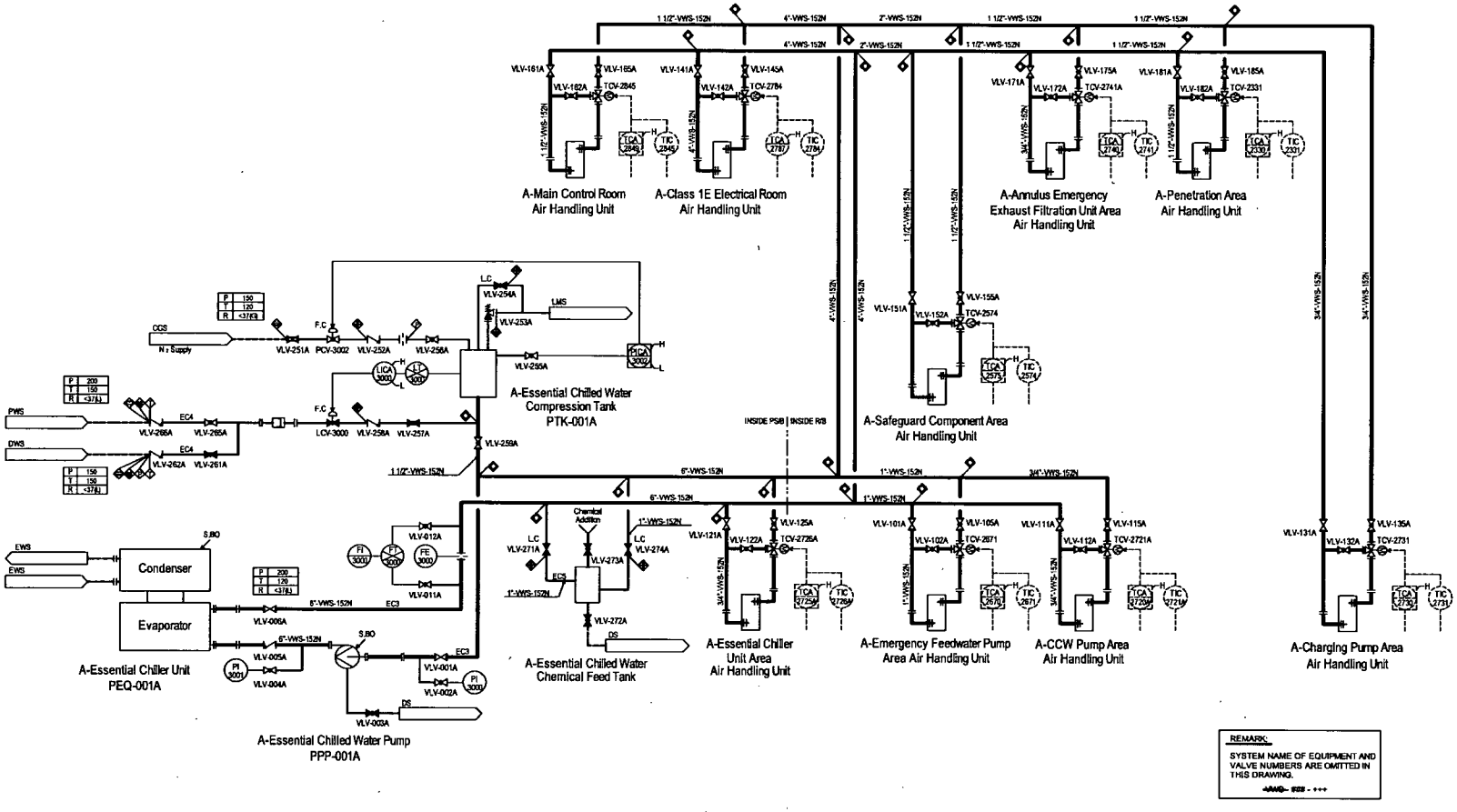

Figure 9.2.7-1 Essential Chilled Water System (Sheet 1 of 4)

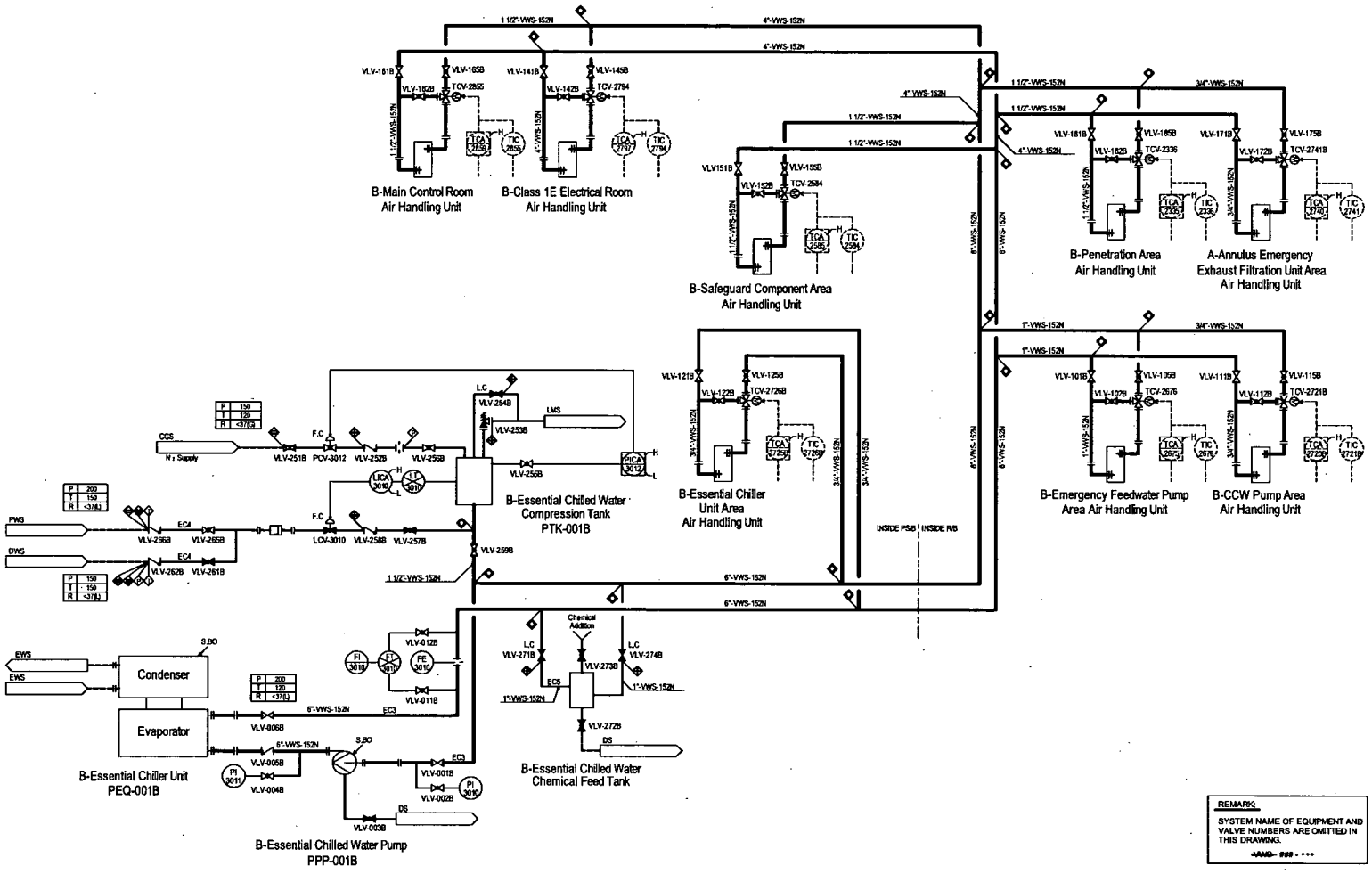

Figure 9.2.7-1 Essential Chilled Water System (Sheet 2 of 4)

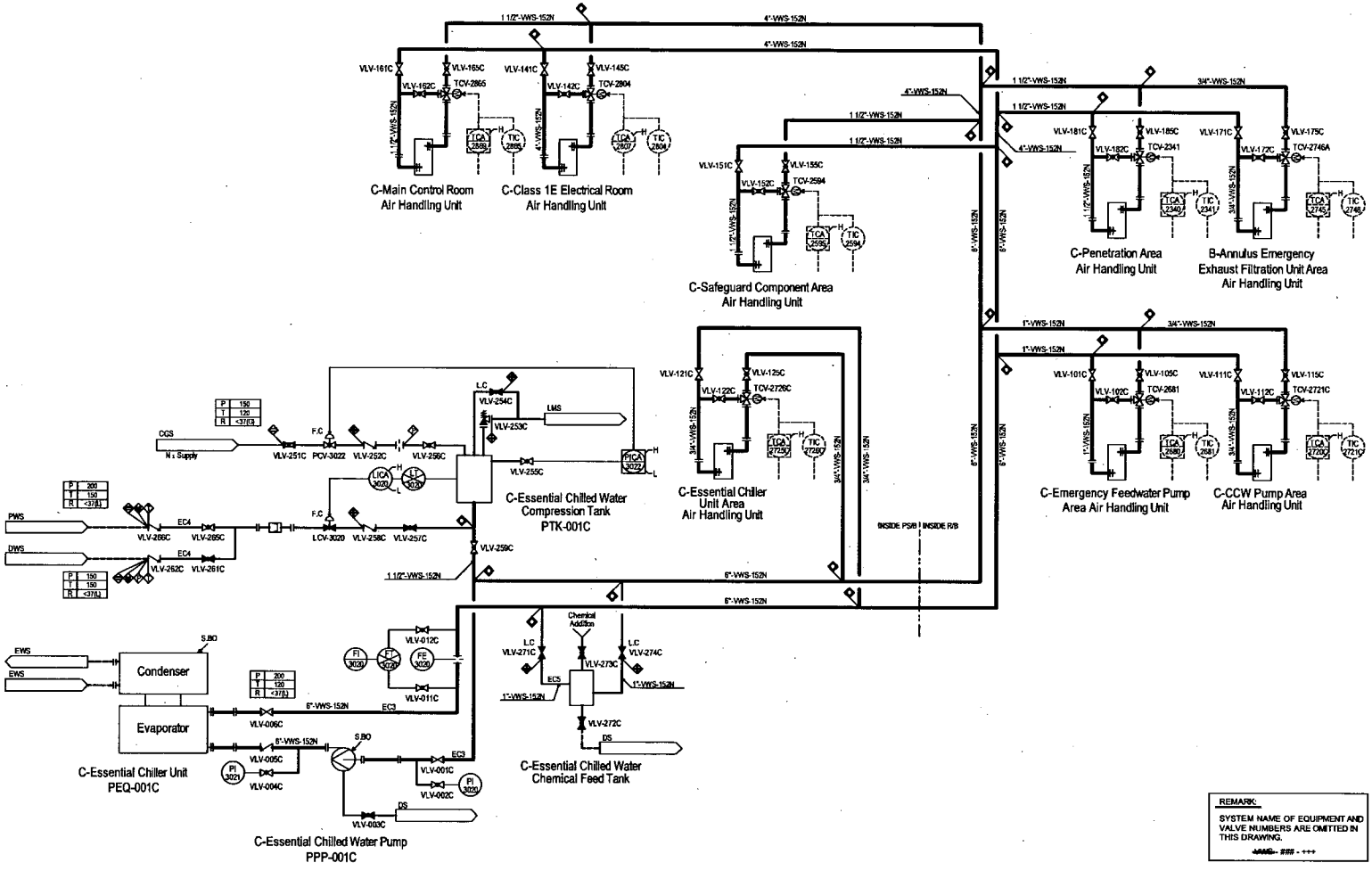

Figure 9.2.7-1 Essential Chilled Water System (Sheet 3 of 4)

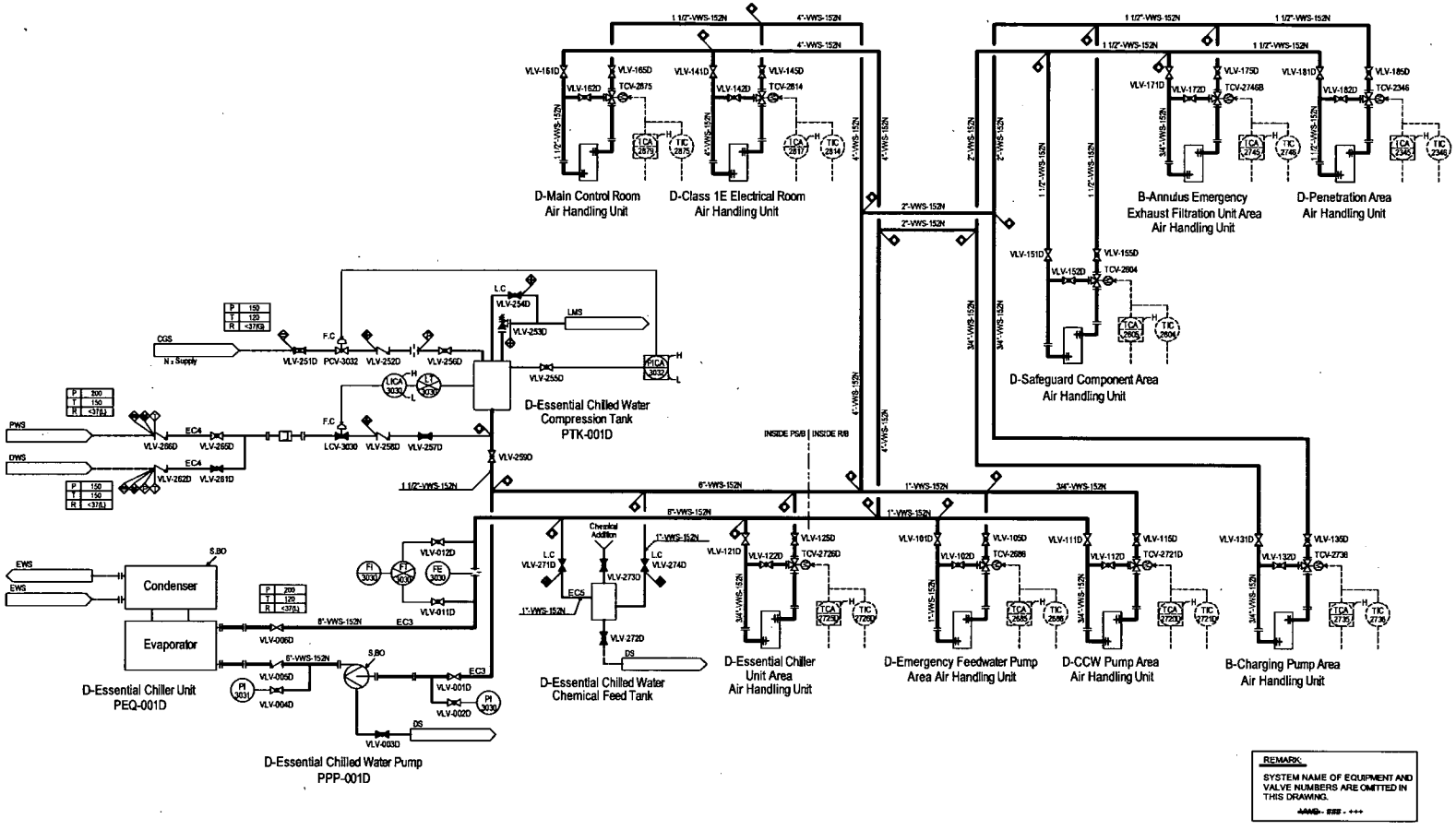

Figure 9.2.7-1 Essential Chilled Water System (Sheet 4 of 4)

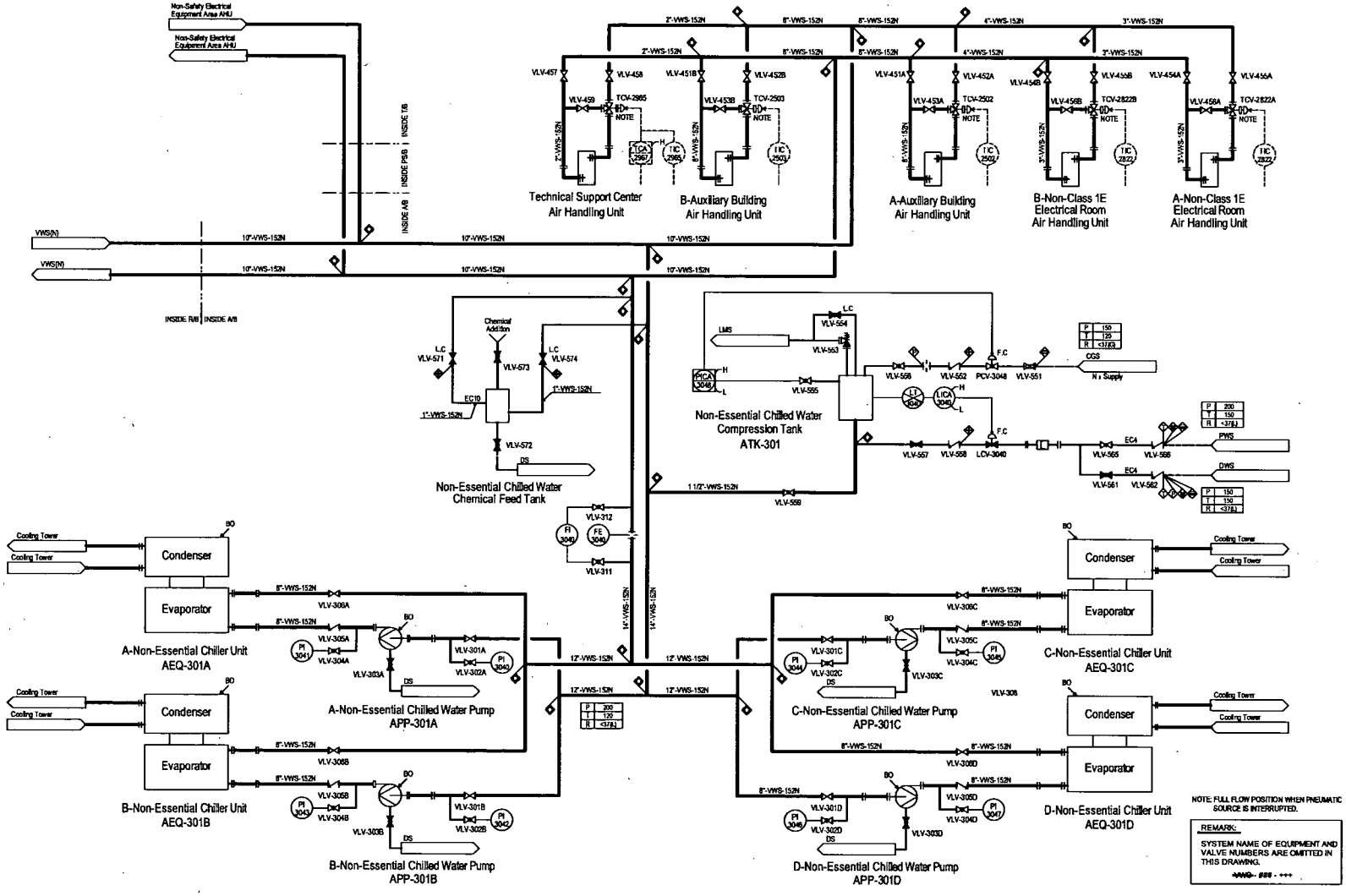

Figure 9.2.7-2 Non-Essential Chilled Water System (Sheet 1 of 3)

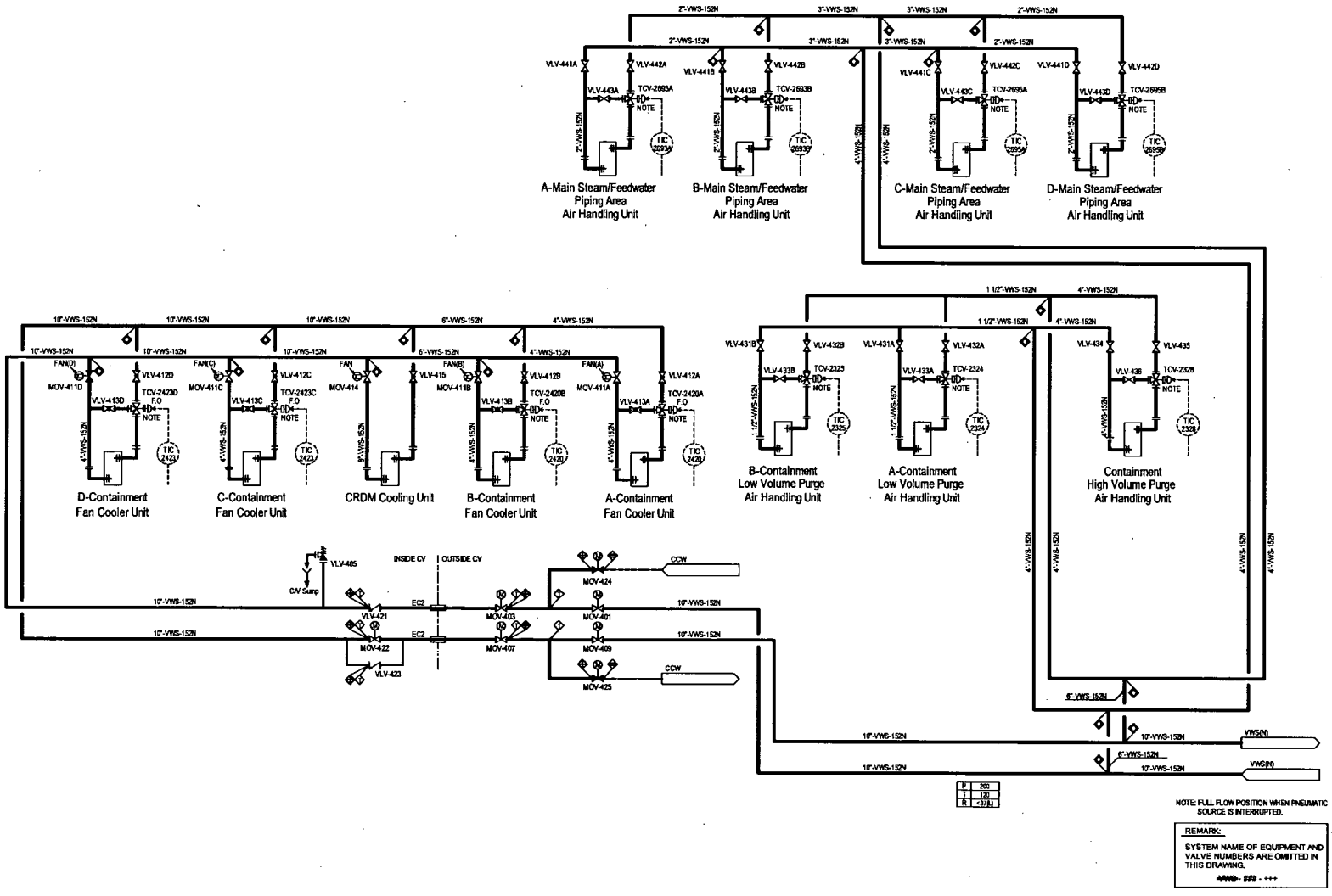

Figure 9.2.7-2 Non-Essential Chilled Water System (Sheet 2 of 3)

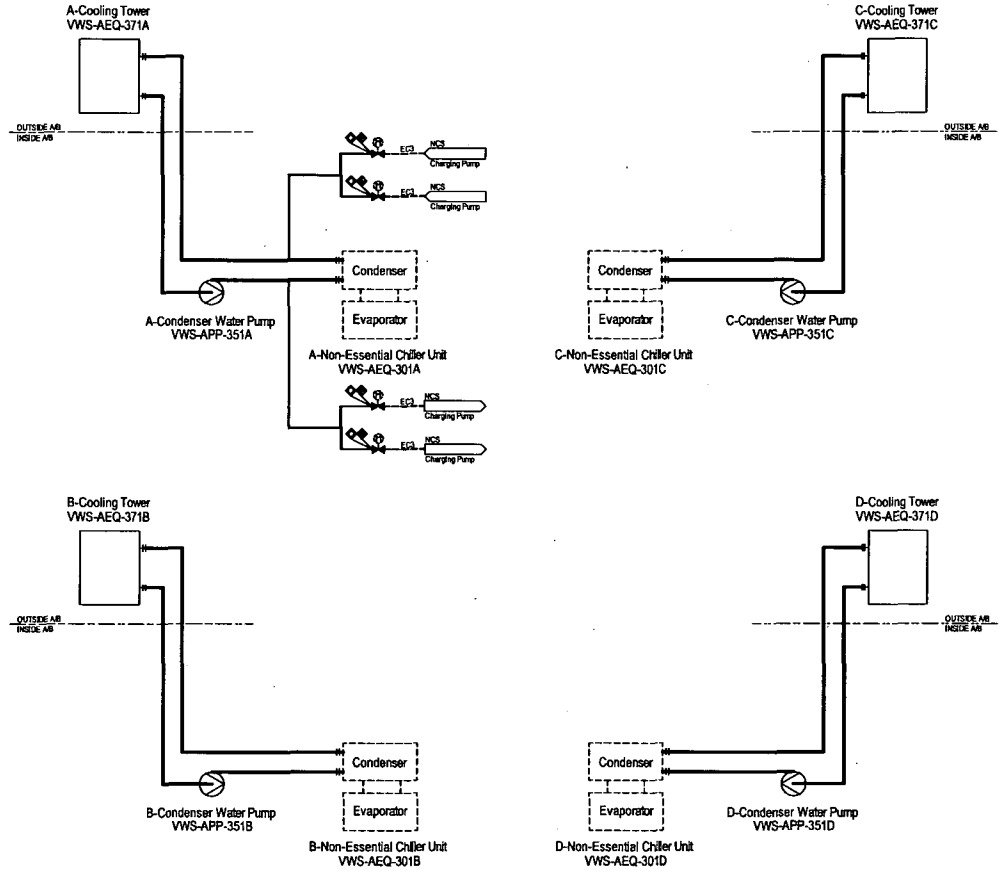

Figure 9.2.7-2 Non-Essential Chilled Water System (Sheet 3 of 3)