NAC INTERNATIONAL

Atlanta Corporate Headquarters
3930 East Jones Bridge Road, Suite 200
Norcross, GA 30092
Phone 770-447-1144
Fax 770-447-1797
www.nacintl.com

July 30, 2009

U.S. Nuclear Regulatory Commission
11555 Rockville Pike
Rockville, MD 20852-2738

Attn: Document Control Desk

Subject: Submittal of NAC Response to NRC Request for Additional Information (RAI) for the Review of the Certificate of Compliance No. 9225, Revision for the Model No. NAC-LWT Package to Incorporate Alternate Shipping Configurations for TPBARs and Fuel Rods

Docket No. 71-9225, TAC No. L24329

Reference:

1. Model No. NAC-LWT Package, U.S. Nuclear Regulatory Commission (NRC) Certificate of Compliance (CoC) No. 9225, Revision 50, December 2008
2. Safety Analysis Report (SAR) for the NAC Legal Weight Truck Cask, Revision 39, NAC International, October 2008
3. Submittal of a Request for an Amendment of Certificate of Compliance (CoC) No. 9225 for the NAC-LWT Cask to Incorporate Alternate Shipping Configurations for TPBARs and Fuel Rods, NAC International, March 23, 2009
4. Request for Additional Information for Review of the Certificate of Compliance No. 9225, Revision for the Model No. NAC-LWT Package, NRC, July 1, 2009

NAC International (NAC) herewith submits its response to Reference 4 as discussed in the NRC/NAC conference call on July 14, 2009. In accordance with that conversation among Kim Hardin and Zhian Li of the NRC and Holger Pfeifer and Tony Patko of NAC, NAC has prepared our responses to the three RAI questions relative to Reference 3, along with the corresponding LWT Safety Analysis Report (SAR) changed pages.

Consistent with NAC administrative practice, this proposed SAR revision is numbered to uniquely identify the applicable changed pages. Revision bars mark the SAR text changes on the Revision LWT-09C pages, and the included List of Effective Pages identifies the current revision level of all pages in the Reference 2 SAR.

In order to better facilitate the review process, NAC is providing the Revision LWT-09C changed pages as complete sections of the SAR. Consequently, a considerable number of Revision LWT-09C pages with no revision bars are included. In accordance with NAC's administrative practices, upon final acceptance of this application, the LWT-09C changed pages will be reformatted and incorporated into the next revision of the NAC-LWT SAR.

ED20090071

NMSS01
NMSS

NAC INTERNATIONAL

This submittal consists of eight copies of this transmittal letter, eight copies of the Reference 4 RAI questions with the NAC responses presented in standard NAC RAI response format, and eight copies of the SAR Revision LWT-09C changed pages.

Approval of the amendment to Reference 1 is requested by November 30, 2009, to support shipping schedules planned for December 2009/January 2010.

If you have any comments or questions, please contact me on my direct line at 678-328-1274.

Sincerely,

Anthony L. Patko
Director, Licensing
Engineering

Enclosures: NAC Response to US NRC RAI dated July 1, 2009
NAC-LWT SAR Changed Pages (Revision LWT-09C)

NAC INTERNATIONAL

RESPONSE TO THE

UNITED STATES NUCLEAR REGULATORY COMMISSION

REQUEST FOR ADDITIONAL INFORMATION

JULY 1, 2009

FOR REVIEW OF THE CERTIFICATE OF COMPLIANCE NO. 9225, REVISION FOR THE MODEL NO. NAC-LWT PACKAGE TO INCORPORATE ALTERNATE SHIPPING CONFIGURATIONS FOR TPBARS AND FUEL RODS

(TAC NO. L24329 DOCKET NO. 71-9225)

JULY 30, 2009

TABLE OF CONTENTS

Page

CHAPTER 5 SHIELDING EVALUATION 3

CHAPTER 6 CRITICALITY EVALUATION 4

CHAPTER 7 OPERATING PROCEDURES 6

NAC INTERNATIONAL RESPONSE TO REQUEST FOR ADDITIONAL INFORMATION

CHAPTER 5 – SHIELDING EVALUATION

5-1 Provide a shielding analysis for the package with 21 fuel rods plus one oversize nonfuel-bearing guide tube or water rod.

This request for amendment seeks approval for transportation of up to 21 fuel rods plus one oversize nonfuel-bearing CE guide tube or water rod with the NAC-LWT packaging system. However, Chapter 5 of the revised SAR provides no shielding analysis for this content. Please provide a shielding analysis for this content or revise the SAR to clearly indicate which previously approved content bounds this content.

This information is needed pursuant to the requirements of 10 CFR 71.47 and 71.51.

NAC International Response

Certificate of Compliance (CoC) condition 5.(b)(2)(ix) for high burnup PWR rods allows for transport of "up to 25 fuel rods." The third paragraph of the same condition specifies that irradiated guide tube segments are allowed contents. It states "Irradiated guide tubes and guide tube segments may be placed in the fuel rod insert." This content was included in Revision 38 of the NAC-LWT CoC in 2004. Justification for this request was based on the licensed payload, including an irradiated fuel assembly skeleton with the high burnup rods (see CoC condition 5.(b)(2)(ix) second paragraph and the analysis in Section 5.3.11 of the LWT SAR).

The scope of the current amendment request is to modify the insert to allow oversize guide tubes and to extend the allowed payload to BWR fuel nonfuel rods, including oversize components. As no LWT SAR Chapter 5 text changes were made in association with the 2004 CoC change that clarified the acceptability of these nonfuel components, NAC hereby revises Section 5.3.8 of the LWT SAR to add the following paragraph:

"Nonfuel-bearing irradiated guide tubes and water rods may be included in the rod holder. These components are part of an assembly lattice (skeleton), and are evaluated and demonstrated to meet requirements for transport, in conjunction with the high burnup fuel rods, in Section 5.3.11."

NAC INTERNATIONAL RESPONSE TO REQUEST FOR ADDITIONAL INFORMATION

CHAPTER 6 – CRITICALITY EVALUATION

6-1 Provide a criticality safety analysis for or add a statement in the SAR to clearly state what the up to 21 fuel rods plus one oversize nonfuel-bearing CE guide tube or water rod with the NAC-LWT packaging system is bounded by and indicate which one is the previously approved contents.

The request for amendment seeks approval for transportation of up to 21 fuel rods plus one oversize nonfuel-bearing CE guide tube or water rod with the NAC-LWT packaging system. However, Chapter 6 of the revised SAR provides no criticality analysis for this content. The applicant is requested to provide a criticality safety analysis for or add a statement in the SAR to clearly state what the up to 21 fuel rods plus one oversize nonfuel-bearing CE guide tube or water rod with the NAC-LWT packaging system is bounded by and indicate which one is the previously approved contents.

This information is needed pursuant to the requirements of 10 CFR 71.47 and 71.51.

NAC International Response

CoC condition 5.(b)(2)(ix) for high burnup PWR rods allows for transport of "up to 25 fuel rods." The third paragraph of the same condition states that irradiated guide tube segments are allowed contents. It states "Irradiated guide tubes and guide tube segments may be placed in the fuel rod insert." This content was included in Revision 38 of the NAC-LWT CoC in 2004. Justification for this request was that the criticality evaluation of PWR/BWR fuel rods was performed without consideration of the lattice/rod holder at a maximum reactivity, optimum rod pitch (see LWT SAR Section 6.3.4 for the model description, and Section 6.4.4 for results). Insertion of nonfuel components reduces the fissile material content and limits moderator space and, therefore, is bounded by analysis.

The scope of the current amendment request was designed to modify the insert to allow oversize guide tubes and to extend the allowed payload to BWR fuel nonfuel rods, including oversize components. As no LWT SAR Chapter 6 text changes were made in association with the 2004 CoC change that clarified the acceptability of these nonfuel components, NAC hereby revises Section 6.3.4 of the NAC-LWT SAR by adding the following paragraph:

NAC International Response to RAI 6-1 (cont'd)

"Nonfuel-bearing irradiated guide tubes and water rods may be included in the rod holder. These components displace moderator space between fuel rods and reduce the maximum amount of fissile material in the cask. The model developed in this section, therefore, bounds the inclusion of nonfuel-bearing materials such as guide tubes and water rods in the NAC-LWT rod holder/insert."

NAC INTERNATIONAL RESPONSE TO REQUEST FOR ADDITIONAL INFORMATION

CHAPTER 7 – OPERATING PROCEDURES

7-1 Provide procedures for loading and unloading the package with 21 fuel rods plus one oversize nonfuel-bearing guide tube or water rod package.

Chapter 7 of the SAR provides operating procedures for all contents. The procedure, however, does not include loading and unloading procedures for 21 fuel rods plus one oversize nonfuel-bearing CE guide tube or water rod package. Since this is a new content and new configuration, procedures for loading and unloading the new content are needed.

This information is needed pursuant to the requirements of 10 CFR 71.47 and 71.51.

NAC International Response

NAC has incorporated additional operating instructions for the handling, loading and unloading of up to 21 PWR and BWR fuel rods and nonfuel-bearing components (e.g., PWR guide tubes or BWR water rods) in the modified 5×5 rod insert placed within the PWR/BWR Rod Transport Canister. The additional operational instructions are included in the following sections of Chapter 7 of the LWT SAR:

- Section 7.1.1 – Procedure for Wet Loading of LWR Fuel Assemblies and Canistered LWR Fuel Rods
- Section 7.1.8 – Procedure for Wet Loading of PWR/BWR Fuel Rods or TPBARs into the PWR/BWR Transport Canister
- Section 7.2.1 – Procedures for Wet Unloading of LWR Fuel and PWR, PWR MOX and BWR Fuel Rods in Transport Canisters
- Section 7.2.6 – Procedure for Dry Unloading of PWR/BWR/MOX Fuel Rod Contents

The revised procedures ensure that appropriate controls are exercised in the loading and unloading of the fuel rods and nonfuel-bearing components.

July 2009

Revision LWT-09C

NAC-LWT

Legal Weight Truck Cask System

SAFETY ANALYSIS REPORT

Volume 1 of 2

Docket No. 71-9225

NAC INTERNATIONAL

Atlanta Corporate Headquarters: 3930 East Jones Bridge Road, Norcross, Georgia 30092 USA
Phone 770-447-1144, Fax 770-447-1797, www.nacintl.com

List of Effective Pages

LIST OF EFFECTIVE PAGES

Chapter 1

1-i thru 1-iv ..... Revision LWT-09A
1-1 thru 1-5 ..... Revision LWT-09A
1.1-1 thru 1.1-3 ..... Revision LWT-09A
1.2-1 thru 1.2-50 ..... Revision LWT-09A
1.3-1 ..... Revision 39
1.4-1 ..... Revision 39
1.5-1 ..... Revision 39

73 drawings in the
Chapter 1 List of Drawings

Chapter 1 Appendices 1-A
through 1-G

Chapter 2

2-i thru 2-xxiv ..... Revision LWT-09A
2-1 ..... Revision 39
2.1.1-1 thru 2.1.1-2 ..... Revision 39
2.1.2-1 thru 2.1.2-3 ..... Revision 39
2.1.3-1 thru 2.1.3-8 ..... Revision 39
2.2.1-1 thru 2.2.1-4 ..... Revision LWT-09A
2.3-1 ..... Revision 39
2.3.1-1 thru 2.3.1-13 ..... Revision 39
2.4-1 ..... Revision 39
2.4.1-1 ..... Revision 39
2.4.2-1 ..... Revision 39
2.4.3-1 ..... Revision 39
2.4.4-1 ..... Revision 39
2.4.5-1 ..... Revision 39
2.4.6-1 ..... Revision 39
2.5.1-1 thru 2.5.1-11 ..... Revision 39
2.5.2-1 thru 2.5.2-17 ..... Revision 39
2.6.1-1 thru 2.6.1-7 ..... Revision 39
2.6.2-1 thru 2.6.2-7 ..... Revision 39
2.6.3-1 ..... Revision 39
2.6.4-1 ..... Revision 39
2.6.5-1 thru 2.6.5-2 ..... Revision 39
2.6.6-1 ..... Revision 39
2.6.7-1 thru 2.6.7-136 ..... Revision LWT-09A
2.6.8-1 ..... Revision 39
2.6.9-1 ..... Revision 39
2.6.10-1 thru 2.6.10-15 ..... Revision 39
2.6.11-1 thru 2.6.11-12 ..... Revision 39
2.6.12-1 thru 2.6.12-60 ..... Revision 39
2.6.12-61 thru 2.6.12-94 . Revision LWT-09A
2.7-1 ..... Revision 39
2.7.1-1 thru 2.7.1-117 ..... Revision 39
2.7.2-1 thru 2.7.2-23 ..... Revision 39
2.7.3-1 thru 2.7.3-5 ..... Revision 39
2.7.4-1 ..... Revision 39
2.7.5-1 thru 2.7.5-5 ..... Revision 39
2.7.6-1 thru 2.7.6-4 ..... Revision 39
2.7.7-1 thru 2.7.7-50 ..... Revision 39
2.7.7-51 thru 2.7.7-72 ..... Revision LWT-09A
2.8-1 ..... Revision 39
2.9-1 thru 2.9-14 ..... Revision LWT-09A
2.10.1-1 thru 2.10.1-3 ..... Revision 39
2.10.2-1 thru 2.10.2-49 ..... Revision 39
2.10.3-1 thru 2.10.3-18 ..... Revision 39
2.10.4-1 thru 2.10.4-11 ..... Revision 39
2.10.5-1 ..... Revision 39
2.10.6-1 thru 2.10.6-19 ..... Revision 39
2.10.7-1 thru 2.10.7-66 ..... Revision 39
2.10.8-1 thru 2.10.8-67 ..... Revision 39
2.10.9-1 thru 2.10.9-9 ..... Revision 39
2.10.10-1 thru 2.10.10-97 ..... Revision 39
2.10.11-1 thru 2.10.11-10 ..... Revision 39

LIST OF EFFECTIVE PAGES (Continued)

2.10.12-1 thru 2.10.12-31 .....Revision 39
2.10.13-1 thru 2.10.13-17 .....Revision 39
2.10.14-1 thru 2.10.14-38 ..Revision LWT-09A
2.10.15-1 thru 2.10.15-10 .....Revision 39
2.10.16-1 thru 2.10.16-5 ....Revision LWT-09A

Chapter 3
3-i thru 3-v .....Revision LWT-09A
3.1-1 thru 3.1-2 .....Revision 39
3.2-1 thru 3.2-11 .....Revision 39
3.3-1 .....Revision 39
3.4-1 thru 3.4-88 .....Revision LWT-09A
3.5-1 thru 3.5-35 .....Revision LWT-09A
3.6-1 thru 3.6-12 .....Revision 39

Chapter 4
4-i thru 4-iii.....Revision LWT-09A
4.1-1 thru 4.1-3 .....Revision LWT-09A
4.2-1 thru 4.2-4 .....Revision LWT-09A
4.3-1 thru 4.3-4 .....Revision LWT-09A
4.4-1 .....Revision 39
4.5-1 thru 4.5-28 .....Revision 39
4.5-29 thru 4.5-40 .....Revision LWT-09A

Chapter 5
5-i thru 5-xii.....Revision LWT-09A
5-1 thru 5-3 .....Revision 39
5.1.1-1 thru 5.1.1-17 .....Revision LWT-09A
5.2.1-1 thru 5.2.1-7 .....Revision 39
5.3.1-1 thru 5.3.1-2 .....Revision 39
5.3.2-1 .....Revision 39
5.3.3-1 thru 5.3.3-8 .....Revision 39
5.3.4-1 thru 5.3.4-19 .....Revision 39
5.3.5-1 thru 5.3.5-4 .....Revision 39
5.3.6-1 thru 5.3.6-18 .....Revision 39
5.3.7-1 thru 5.3.7-19.....Revision 39
5.3.8-1 thru 5.3.8-25..... Revision LWT-09C
5.3.9-1 thru 5.3.9-26.....Revision 39
5.3.10-1 thru 5.3.10-14.....Revision 39
5.3.11-1 thru 5.3.11-48.....Revision 39
5.3.12-1 thru 5.3.12-26.....Revision 39
5.3.13-1 thru 5.3.13-18..Revision LWT-09A
5.3.14-1 thru 5.3.14-21.....Revision 39
5.3.15-1 thru 5.3.15-9.....Revision 39
5.3.16-1 thru 5.3.16-5.....Revision 39
5.3.17-1 thru 5.3.17-9.....Revision 39
5.3.18-1 thru 5.3.18-40.....Revision 39
5.4.1-1 thru 5.4.1-6.....Revision 39

Chapter 6
6-i thru 6-xiii .....Revision LWT-09A
6-1.....Revision 39
6.1-1 thru 6.1-5.....Revision 39
6.2-1.....Revision 39
6.2.1-1 thru 6.2.1-3.....Revision 39
6.2.2-1 thru 6.2.2-3.....Revision 39
6.2.3-1 thru 6.2.3-7.....Revision 39
6.2.4-1.....Revision 39
6.2.5-1 thru 6.2.5-5.....Revision 39
6.2.6-1 thru 6.2.6-3.....Revision 39
6.2.7-1 thru 6.2.7-2.....Revision 39
6.2.8-1 thru 6.2.8-3.....Revision 39
6.2.9-1 thru 6.2.9-4.....Revision 39
6.2.10-1 thru 6.2.10-3.....Revision 39
6.2.11-1 thru 6.2.11-3.....Revision 39
6.2.12-1 thru 6.2.12-4.....Revision 39
6.3.1-1 thru 6.3.1-6.....Revision 39
6.3.2-1 thru 6.3.2-4.....Revision 39
6.3.3-1 thru 6.3.3-9.....Revision 39
6.3.4-1 thru 6.3.4-9..... Revision LWT-09C

LIST OF EFFECTIVE PAGES (Continued)

6.3.5-1 thru 6.3.5-12 ..... Revision 39
6.3.6-1 thru 6.3.6-9 ..... Revision 39
6.3.7-1 thru 6.3.7-4 ..... Revision 39
6.3.8-1 thru 6.3.8-7 ..... Revision 39
6.3.9-1 thru 6.3.9-7 ..... Revision 39
6.4.1-1 thru 6.4.1-10 ..... Revision 39
6.4.2-1 thru 6.4.2-10 ..... Revision 39
6.4.3-1 thru 6.4.3-34 ..... Revision 39
6.4.4-1 thru 6.4.4-24 ..... Revision 39
6.4.5-1 thru 6.4.5-32 ..... Revision 39
6.4.6-1 thru 6.4.6-23 ..... Revision 39
6.4.7-1 thru 6.4.7-14 ..... Revision 39
6.4.8-1 thru 6.4.8-14 ..... Revision 39
6.4.9-1 thru 6.4.9-10 ..... Revision 39
6.4.10-1 thru 6.4.10-18 ..... Revision 39
6.5.1-1 thru 6.5.1-13 ..... Revision 39
6.5.2-1 thru 6.5.2-4 ..... Revision 39
6.5.3-1 thru 6.5.3-2 ..... Revision 39
6.7.1-1 thru 6.7.1-19 ..... Revision LWT-09A
6.7.2-1 thru 6.7.2-47 ..... Revision 39

Appendix 6.6

6.6-i thru 6.6-iii ..... Revision 39
6.6-1 ..... Revision 39
6.6.1-1 thru 6.6.1-111 ..... Revision 39
6.6.2-1 thru 6.6.2-56 ..... Revision 39
6.6.3-1 thru 6.6.3-73 ..... Revision 39
6.6.4.-1 thru 6.6.4-77 ..... Revision 39
6.6.5-1 thru 6.6.5-101 ..... Revision 39
6.6.6-1 thru 6.6.6-158 ..... Revision 39
6.6.7-1 thru 6.6.7-84 ..... Revision 39
6.6.8-1 thru 6.6.8-183 ..... Revision 39
6.6.9-1 thru 6.6.9-52 ..... Revision 39
6.6.10-1 thru 6.6.10-33 ..... Revision 39
6.6.11-1 thru 6.6.11-47 ..... Revision 39
6.6.12-1 thru 6.6.12-20 ..... Revision 39
6.6.13-1 thru 6.6.13-22 ..... Revision 39
6.6.14-1 thru 6.6.14-7 ..... Revision 39
6.6.15-1 thru 6.6.15-45 ..... Revision 39

Chapter 7

7-i thru 7-ii ..... Revision LWT-09A
7.1-1 thru 7.1-56 ..... Revision LWT-09C
7.2-1 thru 7.2-13 ..... Revision LWT-09C
7.3-1 thru 7.3-2 ..... Revision 39

Chapter 8

8-i ..... Revision 39
8.1-1 thru 8.1-11 ..... Revision LWT-09A
8.2-1 thru 8.2-4 ..... Revision LWT-09A
8.3-1 thru 8.3-4 ..... Revision 39

Chapter 9

9-i ..... Revision 39
9-1 thru 9-10 ..... Revision 39

July 2009

Revision LWT-09C

NAC-LWT

Legal Weight Truck Cask System

SAFETY ANALYSIS REPORT

Volume 2 of 2

Docket No. 71-9225

NAC INTERNATIONAL

Atlanta Corporate Headquarters: 3930 East Jones Bridge Road, Norcross, Georgia 30092 USA
Phone 770-447-1144, Fax 770-447-1797, www.nacintl.com

List of Effective Pages

LIST OF EFFECTIVE PAGES

Chapter 1

1-i thru 1-iv ..... Revision LWT-09A
1-1 thru 1-5 ..... Revision LWT-09A
1.1-1 thru 1.1-3 ..... Revision LWT-09A
1.2-1 thru 1.2-50 ..... Revision LWT-09A
1.3-1 ..... Revision 39
1.4-1 ..... Revision 39
1.5-1 ..... Revision 39

73 drawings in the
Chapter 1 List of Drawings

Chapter 1 Appendices 1-A
through 1-G

Chapter 2

2-i thru 2-xxiv ..... Revision LWT-09A
2-1 ..... Revision 39
2.1.1-1 thru 2.1.1-2 ..... Revision 39
2.1.2-1 thru 2.1.2-3 ..... Revision 39
2.1.3-1 thru 2.1.3-8 ..... Revision 39
2.2.1-1 thru 2.2.1-4 ..... Revision LWT-09A
2.3-1 ..... Revision 39
2.3.1-1 thru 2.3.1-13 ..... Revision 39
2.4-1 ..... Revision 39
2.4.1-1 ..... Revision 39
2.4.2-1 ..... Revision 39
2.4.3-1 ..... Revision 39
2.4.4-1 ..... Revision 39
2.4.5-1 ..... Revision 39
2.4.6-1 ..... Revision 39
2.5.1-1 thru 2.5.1-11 ..... Revision 39
2.5.2-1 thru 2.5.2-17 ..... Revision 39
2.6.1-1 thru 2.6.1-7 ..... Revision 39
2.6.2-1 thru 2.6.2-7 ..... Revision 39
2.6.3-1 ..... Revision 39
2.6.4-1 ..... Revision 39
2.6.5-1 thru 2.6.5-2 ..... Revision 39
2.6.6-1 ..... Revision 39
2.6.7-1 thru 2.6.7-136 ..... Revision LWT-09A
2.6.8-1 ..... Revision 39
2.6.9-1 ..... Revision 39
2.6.10-1 thru 2.6.10-15 ..... Revision 39
2.6.11-1 thru 2.6.11-12 ..... Revision 39
2.6.12-1 thru 2.6.12-60 ..... Revision 39
2.6.12-61 thru 2.6.12-94 . Revision LWT-09A
2.7-1 ..... Revision 39
2.7.1-1 thru 2.7.1-117 ..... Revision 39
2.7.2-1 thru 2.7.2-23 ..... Revision 39
2.7.3-1 thru 2.7.3-5 ..... Revision 39
2.7.4-1 ..... Revision 39
2.7.5-1 thru 2.7.5-5 ..... Revision 39
2.7.6-1 thru 2.7.6-4 ..... Revision 39
2.7.7-1 thru 2.7.7-50 ..... Revision 39
2.7.7-51 thru 2.7.7-72 ..... Revision LWT-09A
2.8-1 ..... Revision 39
2.9-1 thru 2.9-14 ..... Revision LWT-09A
2.10.1-1 thru 2.10.1-3 ..... Revision 39
2.10.2-1 thru 2.10.2-49 ..... Revision 39
2.10.3-1 thru 2.10.3-18 ..... Revision 39
2.10.4-1 thru 2.10.4-11 ..... Revision 39
2.10.5-1 ..... Revision 39
2.10.6-1 thru 2.10.6-19 ..... Revision 39
2.10.7-1 thru 2.10.7-66 ..... Revision 39
2.10.8-1 thru 2.10.8-67 ..... Revision 39
2.10.9-1 thru 2.10.9-9 ..... Revision 39
2.10.10-1 thru 2.10.10-97 ..... Revision 39
2.10.11-1 thru 2.10.11-10 ..... Revision 39

LIST OF EFFECTIVE PAGES (Continued)

2.10.12-1 thru 2.10.12-31 .....Revision 39
2.10.13-1 thru 2.10.13-17 .....Revision 39
2.10.14-1 thru 2.10.14-38 ..Revision LWT-09A
2.10.15-1 thru 2.10.15-10 .....Revision 39
2.10.16-1 thru 2.10.16-5 ....Revision LWT-09A

Chapter 3
3-i thru 3-v .....Revision LWT-09A
3.1-1 thru 3.1-2 .....Revision 39
3.2-1 thru 3.2-11 .....Revision 39
3.3-1 .....Revision 39
3.4-1 thru 3.4-88 .....Revision LWT-09A
3.5-1 thru 3.5-35 .....Revision LWT-09A
3.6-1 thru 3.6-12 .....Revision 39

Chapter 4
4-i thru 4-iii .....Revision LWT-09A
4.1-1 thru 4.1-3 .....Revision LWT-09A
4.2-1 thru 4.2-4 .....Revision LWT-09A
4.3-1 thru 4.3-4 .....Revision LWT-09A
4.4-1 .....Revision 39
4.5-1 thru 4.5-28 .....Revision 39
4.5-29 thru 4.5-40 .....Revision LWT-09A

Chapter 5
5-i thru 5-xii .....Revision LWT-09A
5-1 thru 5-3 .....Revision 39
5.1.1-1 thru 5.1.1-17 .....Revision LWT-09A
5.2.1-1 thru 5.2.1-7 .....Revision 39
5.3.1-1 thru 5.3.1-2 .....Revision 39
5.3.2-1 .....Revision 39
5.3.3-1 thru 5.3.3-8 .....Revision 39
5.3.4-1 thru 5.3.4-19 .....Revision 39
5.3.5-1 thru 5.3.5-4 .....Revision 39
5.3.6-1 thru 5.3.6-18 .....Revision 39
5.3.7-1 thru 5.3.7-19 .....Revision 39
5.3.8-1 thru 5.3.8-25 ..... Revision LWT-09C
5.3.9-1 thru 5.3.9-26 .....Revision 39
5.3.10-1 thru 5.3.10-14 .....Revision 39
5.3.11-1 thru 5.3.11-48 .....Revision 39
5.3.12-1 thru 5.3.12-26 .....Revision 39
5.3.13-1 thru 5.3.13-18 ..Revision LWT-09A
5.3.14-1 thru 5.3.14-21 .....Revision 39
5.3.15-1 thru 5.3.15-9 .....Revision 39
5.3.16-1 thru 5.3.16-5 .....Revision 39
5.3.17-1 thru 5.3.17-9 .....Revision 39
5.3.18-1 thru 5.3.18-40 .....Revision 39
5.4.1-1 thru 5.4.1-6 .....Revision 39

Chapter 6
6-i thru 6-xiii .....Revision LWT-09A
6-1 .....Revision 39
6.1-1 thru 6.1-5 .....Revision 39
6.2-1 .....Revision 39
6.2.1-1 thru 6.2.1-3 .....Revision 39
6.2.2-1 thru 6.2.2-3 .....Revision 39
6.2.3-1 thru 6.2.3-7 .....Revision 39
6.2.4-1 .....Revision 39
6.2.5-1 thru 6.2.5-5 .....Revision 39
6.2.6-1 thru 6.2.6-3 .....Revision 39
6.2.7-1 thru 6.2.7-2 .....Revision 39
6.2.8-1 thru 6.2.8-3 .....Revision 39
6.2.9-1 thru 6.2.9-4 .....Revision 39
6.2.10-1 thru 6.2.10-3 .....Revision 39
6.2.11-1 thru 6.2.11-3 .....Revision 39
6.2.12-1 thru 6.2.12-4 .....Revision 39
6.3.1-1 thru 6.3.1-6 .....Revision 39
6.3.2-1 thru 6.3.2-4 .....Revision 39
6.3.3-1 thru 6.3.3-9 .....Revision 39
6.3.4-1 thru 6.3.4-9 ..... Revision LWT-09C

LIST OF EFFECTIVE PAGES (Continued)

6.3.5-1 thru 6.3.5-12 ..... Revision 39
6.3.6-1 thru 6.3.6-9 ..... Revision 39
6.3.7-1 thru 6.3.7-4 ..... Revision 39
6.3.8-1 thru 6.3.8-7 ..... Revision 39
6.3.9-1 thru 6.3.9-7 ..... Revision 39
6.4.1-1 thru 6.4.1-10 ..... Revision 39
6.4.2-1 thru 6.4.2-10 ..... Revision 39
6.4.3-1 thru 6.4.3-34 ..... Revision 39
6.4.4-1 thru 6.4.4-24 ..... Revision 39
6.4.5-1 thru 6.4.5-32 ..... Revision 39
6.4.6-1 thru 6.4.6-23 ..... Revision 39
6.4.7-1 thru 6.4.7-14 ..... Revision 39
6.4.8-1 thru 6.4.8-14 ..... Revision 39
6.4.9-1 thru 6.4.9-10 ..... Revision 39
6.4.10-1 thru 6.4.10-18 ..... Revision 39
6.5.1-1 thru 6.5.1-13 ..... Revision 39
6.5.2-1 thru 6.5.2-4 ..... Revision 39
6.5.3-1 thru 6.5.3-2 ..... Revision 39
6.7.1-1 thru 6.7.1-19 ..... Revision LWT-09A
6.7.2-1 thru 6.7.2-47 ..... Revision 39

Appendix 6.6
6.6-i thru 6.6-iii ..... Revision 39
6.6-1 ..... Revision 39
6.6.1-1 thru 6.6.1-111 ..... Revision 39
6.6.2-1 thru 6.6.2-56 ..... Revision 39
6.6.3-1 thru 6.6.3-73 ..... Revision 39
6.6.4.-1 thru 6.6.4-77 ..... Revision 39
6.6.5-1 thru 6.6.5-101 ..... Revision 39
6.6.6-1 thru 6.6.6-158 ..... Revision 39
6.6.7-1 thru 6.6.7-84 ..... Revision 39
6.6.8-1 thru 6.6.8-183 ..... Revision 39
6.6.9-1 thru 6.6.9-52 ..... Revision 39
6.6.10-1 thru 6.6.10-33 ..... Revision 39
6.6.11-1 thru 6.6.11-47 ..... Revision 39
6.6.12-1 thru 6.6.12-20 ..... Revision 39
6.6.13-1 thru 6.6.13-22 ..... Revision 39
6.6.14-1 thru 6.6.14-7 ..... Revision 39
6.6.15-1 thru 6.6.15-45 ..... Revision 39

Chapter 7
7-i thru 7-ii ..... Revision LWT-09A
7.1-1 thru 7.1-56 ..... Revision LWT-09C
7.2-1 thru 7.2-13 ..... Revision LWT-09C
7.3-1 thru 7.3-2 ..... Revision 39

Chapter 8
8-i ..... Revision 39
8.1-1 thru 8.1-11 ..... Revision LWT-09A
8.2-1 thru 8.2-4 ..... Revision LWT-09A
8.3-1 thru 8.3-4 ..... Revision 39

Chapter 9
9-i ..... Revision 39
9-1 thru 9-10 ..... Revision 39

Chapter 5

5.3.8 High Burnup PWR and BWR Rods Shielding Evaluation

Results of a shielding and decay heat source analysis for up to 25 high burnup PWR or BWR fuel rods are presented in this section. The rods have burnups up to 80,000 MWd/MTU. The results are presented in terms of the cool time required for 25 rods to meet package surface and 2 meter dose rate limits and a cask total decay heat limit of 2.1 kW for BWR rods and 2.3 kW for PWR rods.

Consistent with the analysis performed for the lower burnup PWR rods, the shielding analysis is performed using the one-dimensional SCALE SAS1 shielding analysis sequence. Source terms are generated based on a limiting description of PWR and BWR fuel rods using the SCALE SAS2H code.

The PWR analysis is based on a single limiting description of a PWR fuel rod which bounds rods from all PWR assembly array sizes. Two BWR rod models are employed. The first is based on a limiting description of rods from 7×7 array size assemblies. The results for this case indicate that the highest burnup BWR 7×7 rods require greater than 150 days cool time before shipment. Hence, a second BWR fuel rod model is developed which bounds rods from 8×8 and larger array size fuel assemblies. The results for this model indicate that up to 25 rods from these assemblies can be shipped at the maximum burnup of 80,000 MWd/MTU after 150 days cool time.

Nonfuel-bearing irradiated guide tubes and water rods may be included in the rod holder. These components are part of an assembly lattice (skeleton), and are evaluated and demonstrated to meet requirements for transport, in conjunction with the high burnup fuel rods, in Section 5.3.11.

5.3.8.1 High Burnup PWR and BWR Rods Source Terms

The limiting rod descriptions are determined by developing a hybrid fuel rod model, which contains a conservatively bounding uranium loading. For a given burnup, the bounding uranium mass leads to bounding decay heat and radiation source terms. Fuel rod model parameters are shown in Table 5.3.8-1. In the BWR model, fuel rods from 7×7 array size assemblies are treated as a special case, since their significantly higher mass loadings lead to required extended cool times, which would unnecessarily penalize BWR rods from larger array size assemblies, which have a significantly lower mass per rod and correspondingly lower radiation and decay heat source terms. The BWR 7×7 fuel rod model bounds all rods from 7×7 array size BWR assemblies, and the BWR 8×8 fuel rod model bounds rods from all 8×8 and larger (i.e., 9×9, 10×10) BWR assemblies.

SAS2H models of the three fuel rod models are developed based on the cycle parameters shown in Table 5.3.8-2. The rod exposure is conservatively assumed to occur over a typical number of reactor operating cycles: three for the PWR rods and four for the BWR rods. In addition, in order to achieve the high fuel burnups, assembly powers are conservatively increased rather than extending cycle lengths. A down time of 60 days between cycles is assumed. Fuel rods are evaluated at an initial enrichment of 4.0 wt % ^{235}U. This enrichment is expected to be a lower bound for fuel burned as high as 80,000 MWd/MTU. The SAS2H models for each rod type are shown in Figure 5.3.8-1 through Figure 5.3.8-3. The SCALE 27N18G library is employed here; the energy group structure of this library is shown in Table 5.3.8-3 and Table 5.3.8-4 along with the ANSI flux-to-dose-rate conversion factors employed in the shielding analysis.

The resulting decay heat source terms for 25 rods of each fuel type are shown in Table 5.3.8-5. The BWR 7×7 rods are analyzed at 60, 70, and 80 GWd/MTU burnup. Neutron and gamma radiation source spectra for the various fuel types are shown in Table 5.3.8-6 through Table 5.3.8-15 at various cool times. Note that the neutron source spectrum is non-zero only in the highest seven energy groups; hence, the remaining energy groups are omitted from the tables.

5.3.8.1.1 Axial Source Profile

The description of the PWR and BWR rods axial source profile is based on bounding axial burnup profiles observed for fuel at much lower burnups. This description is conservative because the higher burned fuel of interest here will have a substantially lower axial peaking factor. The PWR and BWR axial burnup and source profiles are shown in Figure 5.3.8-4 and Figure 5.3.8-5, respectively. Values are tabulated in Table 5.3.8-17 and Table 5.3.8-18.

The computed relation between source rate S and burnup B:

$$S = aB^b$$

implies that, in general, the average source rate is not equal to the source rate at the average burnup. The exponent b is determined based on SAS2H analyses of various fuel assemblies at different burnups. A value of 4.22 is used for neutron source rate variation in both PWR and BWR fuel types. The exponent for photon source rates has been determined to be 1.0.

Two scaling quantities are of interest. First, since SAS2H analyses are conducted at the average assembly burnup, a scale factor is required to relate the assembly average source rate to the source rate at the average burnup:

$$r = \frac{\overline{S}}{S(\overline{B})} = \frac{\frac{a}{H}\int B^b dz}{a\overline{B}^b}$$

where H is the height of the fuel region. With the burnup profile normalized to one, this becomes

$$r = \frac{1}{H}\int B^b dz$$

The integral is evaluated numerically using the trapezoid rule, and the resulting scale factors are shown in Table 5.3.8-16. The second scaling parameter is the ratio of the peak to average source rate.

$$s = \frac{S(B_{max})}{\overline{S}}$$

This parameter is also shown in Table 5.3.8-16.

5.3.8.2 High Burnup PWR and BWR Rods Shielding Model

A homogenized description of the LWT cask payload and basket structural materials is developed for use in the one-dimensional shielding model. The fuel region is a homogenized smear of the fuel rods and the stainless steel insert tubes (1.7463 cm OD with 0.0711 cm wall thickness). Resulting homogenized material compositions are provided in Table 5.3.8-19.

Outside the homogenized fuel region, the remaining basket materials are represented as concentric rings of stainless steel, aluminum or void regions. The radii of the rings are chosen to conserve the cross sectional area of the material present in each region.

Table 5.3.8-21 shows the key basket model parameters required to develop the concentric radial model. Material compositions for the basket and cask materials are shown in Table 5.3.8-20. The resulting one-dimensional model of the LWT cask including basket and payload is shown in Table 5.3.8-22.

SAS1 shielding models are developed for each fuel type based on the one-dimensional model shown in Table 5.3.8-22. Neutron and gamma dose rates are evaluated for each fuel type and for each decay time shown in Table 5.3.8-6 through Table 5.3.8-15. Dose rates are evaluated using a dose response methodology.

5.3.8.2.1 Dose Response Methodology

In order to avoid the significant effort required to prepare and execute dozens of one-dimensional cases for all fuel configurations and burnups under consideration, a unique device is employed which permits the ready calculation of dose rates at a given location by use of a dose rate response function. The dose rate response function for a given source type at a given detector location is a collection of values, one for each energy group, each of which gives the contribution to the dose rate at a specific detector location from a unit source strength in that energy group.

With this response function, the dose rate, d, at the corresponding detector location is determined for any given fuel type simply by vector multiplying the unnormalized source spectrum, f, by the response function, r.

The dose rate response function is computed by solving a series of one-dimensional cases, one for each energy group, with a unit source strength in each energy group. In practice, the source strength is normalized to some large value (here, $10^{10}/cm^3/sec$) in order to avoid numeric underflow in the calculation.

The resulting cask surface and 2m response functions for the various fuel types analyzed here are shown in Table 5.3.8-23 through Table 5.3.8-26.

The results of multiplying the computed dose response functions by the various spectra shown in the tables are dose rates associated with the source at the average assembly burnup. These computed dose rates are then scaled by the ratio of the average source to the source at the average burnup, as tabulated in Table 5.3.8-16. At 2m from the cask, this result is an accurate estimate of the dose rate since the axial source peaking factor does not have a significant effect on dose rates at this distance from the cask. On the surface, however, the computed dose rates are further scaled by the peak-to-average source ratio in order to more accurately capture the peak axial surface dose rate.

5.3.8.3 High Burnup PWR and BWR Rods Shielding Evaluation

Table 5.3.8-27 and Table 5.3.8-28 summarize the computed dose rates as a function of cool time for each fuel type at the surface and 2m from the edge of the cask conveyance. Each table also includes the cask total decay heat.

The surface dose rate results are well below the regulatory limit of 200 mrem/hr for all fuel types at burnups up to 80,000 MWd/MTU and for cool times greater than 150 days. Hence, the normal condition surface dose rates do not impose any restrictions on the suitability of fuel for shipment.

The 2m dose rate results are limited to 10.0 mrem/hr. Hence, the results in Table 5.3.8-28 indicate that all fuels except the BWR 7×7 at 80,000 MWd/MTU lead to 2m dose rates below 9.0 mrem/hr at 150 days cool time. The BWR 7×7 fuel requires 180 days cool time to fall below 9.0 mrem/hr.

Finally, the cask decay heat limit of 2.1 kW/cask (BWR) and 2.3 kW/cask (PWR) further constrains the minimum cool time requirements. Based on the tabulated results, all fuel except the BWR 7×7 can be shipped at 150 days cool time. The BWR 7×7 at 60,000 MWd/MTU requires 210 days cool time, at 70,000 requires 240 days cool time, and at 80,000 MWd/MTU requires 270 days cool time based on decay heat source alone.

Combining the constraints for surface and 2m dose rate and cask total decay heat, the loading table shown in Table 5.3.8-29 is obtained.

Accident dose rates were not explicitly calculated for the 80 GWd/MTU PWR and BWR fuel rods. The accident dose rate for the 60 GWd/MTU PWR rods was reported in Section 5.3.5 as 69.44 mrem/hr at 1 meter from the cask. Conservatively applying a fuel mass ratio of the maximum 80 GWd/MTU payload to the 60 GWd/MTU payload (108.8/65.6), and the neutron dose rate scaling factor ($[80/60]^{4.22}$) results in a maximum dose rate less than 400 mrem/hr. This conservative estimate is significantly lower than the 1000 mrem/hr limit.

Figure 5.3.8-1 PWR Rod SAS2H Model

```
=SAS2H       PARM=(HALT06,SKIPSHIPDATA)
PWR 4.0 W/O U235, 80000 MWD/MTU UP TO 1 YEAR COOLING
27GROUPNDF4 LATTICECELL
UO2         1 0.95 811 92235 4.0 92238 96.0 END
ZIRCALLOY  2 1.0 620 END
H2O         3 DEN=0.725 1.0 570 END
ARBM-BORMOD 0.725 1 1 0 0 5000 100 3 550.0E-6 570 END
END COMP
SQUAREPITCH 1.473 0.9665 1 3 1.118 2 0.986 0 END
NPIN/ASSM=176 FUELENGTH=389.9 NCYCLE=3 NLIB/CYC=2 PRINTLEVEL=6
INPLEVEL=2 NUMZONES=4  END
3 1.3589 2 1.4605 3 1.6623 500 5.2039
POWER=19.36 BURN=636.4 DOWN=60.0 END
POWER=19.36 BURN=636.4 DOWN=60.0 END
POWER=19.36 BURN=636.4 DOWN=0.0 END
END
```

Figure 5.3.8-2 BWR 7×7 SAS2H Model Shown at 80,000 MWd/MTU

```
=SAS2H       PARM=(HALT08,SKIPSHIPDATA)
BWR/4-6 7x7 4.0 W/O U235 80,000 MWD/MTU, 40% VOID,  UP TO 1 YEAR
COOLING
27GROUPNDF4 LATTICECELL
UO2        1 0.95 840 92235 4.0 92238 96.0 END
ZIRCALLOY 2 1.0 620. END
H2O 3 DEN=0.446 1.0 562. END
H2O 4 DEN=0.743 1.0 553. END
ZIRCALLOY 5 1.0 553 END
H2O 6 DEN=0.446 1.0 562. END
END COMP
SQUAREPITCH 1.8745 1.2446 1 3 1.448 2 1.265 0 END
NPIN/ASSM=49 FUELENGTH=389.9 NCYCLES=4 NLIB/CYC=2 PRINTLEVEL=6
INPLEVEL=2 NUMZONES=5 END
 1 0.001 500 7.403 6 7.564 5 7.793 4 8.598
POWER=5.85 BURN=730.0 DOWN=60 END
POWER=5.85 BURN=730.0 DOWN=60 END
POWER=5.85 BURN=730.0 DOWN=60 END
POWER=5.85 BURN=730.0 DOWN=0.0 END
```

Figure 5.3.8-3 BWR 8×8 Rod SAS2H Model

```
=SAS2H      PARM=(HALT08,SKIPSHIPDATA)
BWR/4-6 8x8 4.0 W/O U235 80,000 MWD/MTU, 40% VOID,  UP TO 1 YEAR
COOLING
'LEVEL 2 INPUT FROM 790-4002
27GROUPNDF4 LATTICECELL
UO2       1 0.95 840 92235 4.0 92238 96.0 END
ZIRCALLOY 2 1.0 620. END
H2O 3 DEN=0.446 1.0 562. END
H2O 4 DEN=0.743 1.0 553. END
ZIRCALLOY 5 1.0 553 END
H2O 6 DEN=0.446 1.0 562. END
END COMP
SQUAREPITCH 1.626 1.0701 1 3 1.260 2 1.086 0 END
NPIN/ASSM=63 FUELENGTH=389.9 NCYCLES=4 NLIB/CYC=2 PRINTLEVEL=6
INPLEVEL=2 NUMZONES=7 END
4 0.540 5 0.620 6 0.917 500 7.337 6 7.564 5 7.793 4 8.598
POWER=5.56 BURN=730.0 DOWN=60 END
POWER=5.56 BURN=730.0 DOWN=60 END
POWER=5.56 BURN=730.0 DOWN=60 END
POWER=5.56 BURN=730.0 DOWN=0.0 END
END
```

Figure 5.3.8-4 PWR Rods Axial Burnup and Source Profiles

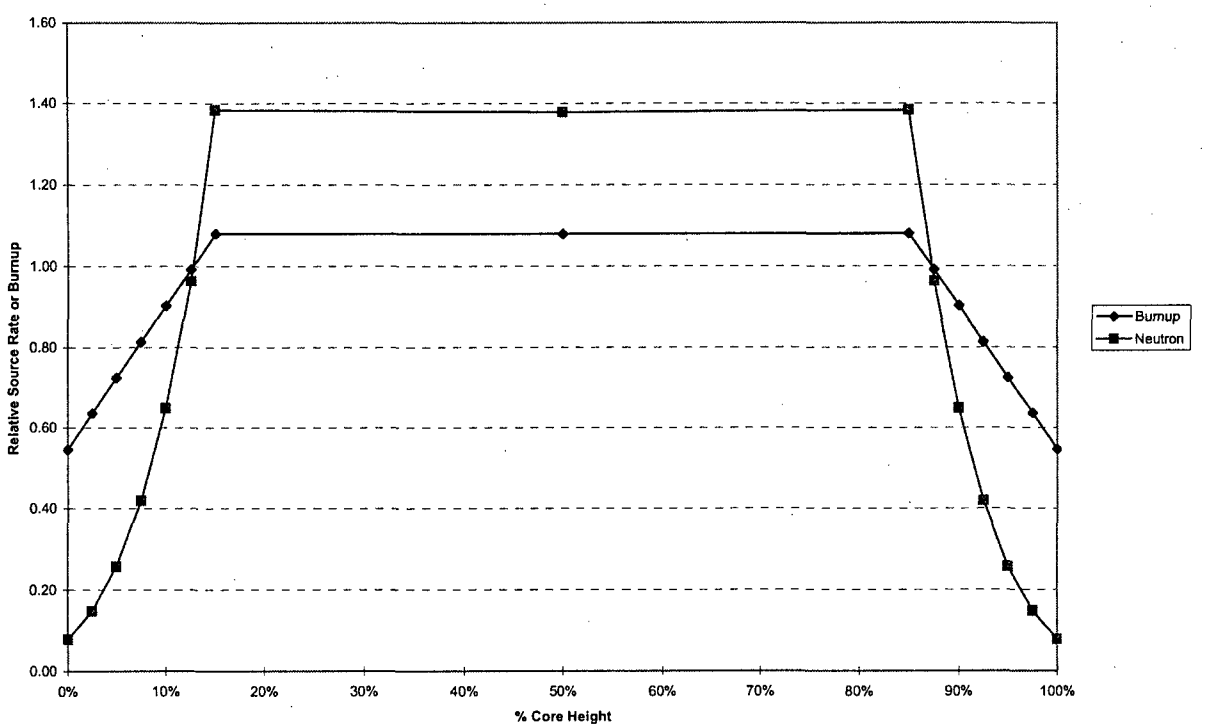

Figure 5.3.8-5 BWR Rods Axial Burnup and Source Profiles

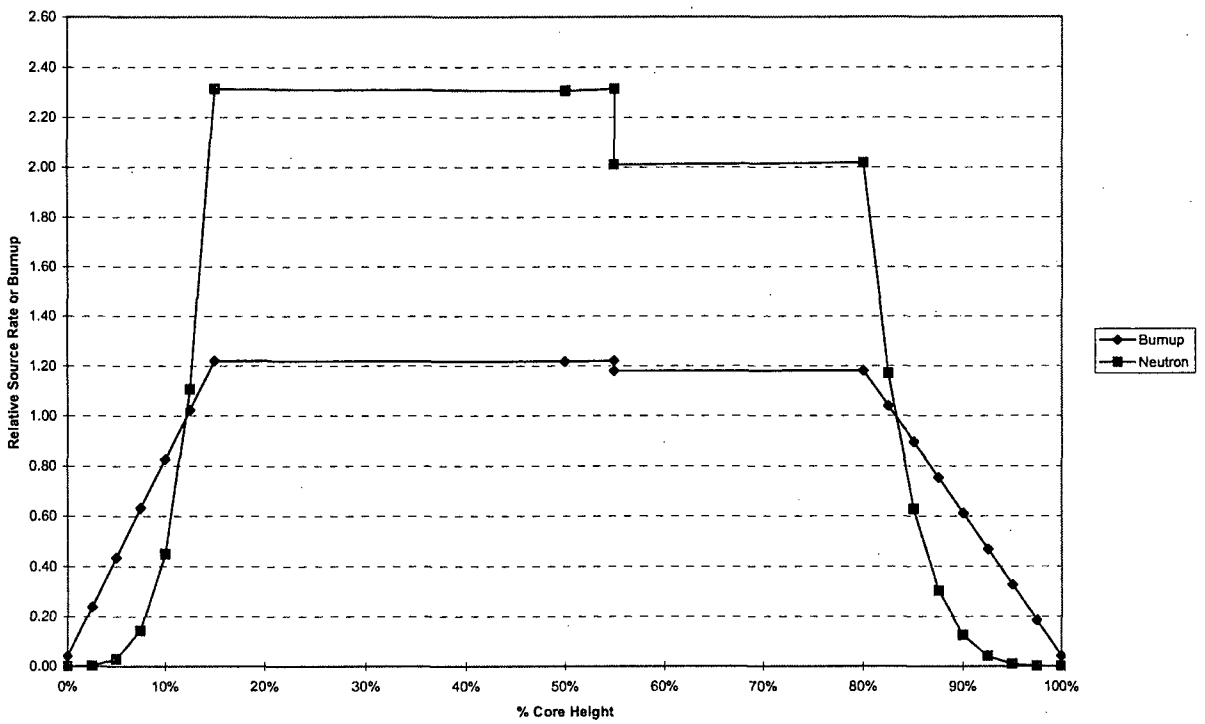

Table 5.3.8-1 High Burnup Fuel Rod Model Parameters

Parameter	Unit	PWR	BWR 7×7	BWR 8×8
Version		Hybrid	Hybrid	Hybrid
% Theoretical Density	[%]	95%	95%	95%
Clad		Zirc-4	Zirc-4	Zirc-2
Max Assy Loading	[MTU]	0.4620	0.2133	0.2028
Fuel Rods		176	49	63
Pitch	[cm]	1.4730	1.8750	1.6260
Rod Diam	[cm]	1.1180	1.4480	1.2600
Clad Inner Diam	[cm]	0.9860	1.2650	1.0860
Pellet Diam	[cm]	0.9665	1.2446	1.0701
Active Length	[cm]	389.9	389.9	389.9
Mass Density	[kg/cm]	1.185	0.547	0.520
	[g/cm/rod]	6.733	11.165	8.256

Table 5.3.8-2 High Burnup Fuel Assembly Model Parameters

Fuel Type	Burnup [MWd/MTU]	Number Cycles	Assy Power [MW]	Cycle Length [d]
PWR	80,000	3	19.36	636.4
BWR 7×7	60,000	4	5.85	547.0
BWR 7×7	70,000	4	5.85	638.1
BWR 7×7	80,000	4	5.85	730.0
BWR 8×8	80,000	4	5.56	730.0

Table 5.3.8-3 SCALE 27N18G Neutron Group Structure and ANSI Dose Factors

Group	Lower E [MeV]	Upper E [MeV]	Avg E [MeV]	Dose Factor [(rem/hr)/(n/cm²/s]
1	6.43E+00	2.00E+01	1.32E+01	1.49E-04
2	3.00E+00	6.43E+00	4.72E+00	1.45E-04
3	1.85E+00	3.00E+00	2.43E+00	1.27E-04
4	1.40E+00	1.85E+00	1.63E+00	1.28E-04
5	9.00E-01	1.40E+00	1.15E+00	1.30E-04
6	4.00E-01	9.00E-01	6.50E-01	1.03E-04
7	1.00E-01	4.00E-01	2.50E-01	5.12E-05
8	1.70E-02	1.00E-01	5.85E-02	1.23E-05
9	3.00E-03	1.70E-02	1.00E-02	3.84E-06
10	5.50E-04	3.00E-03	1.78E-03	3.72E-06
11	1.00E-04	5.50E-04	3.25E-04	4.02E-06
12	3.00E-05	1.00E-04	6.50E-05	4.29E-06
13	1.00E-05	3.00E-05	2.00E-05	4.47E-06
14	3.05E-06	1.00E-05	6.52E-06	4.57E-06
15	1.77E-06	3.05E-06	2.41E-06	4.56E-06
16	1.30E-06	1.77E-06	1.53E-06	4.52E-06
17	1.13E-06	1.30E-06	1.21E-06	4.49E-06
18	1.00E-06	1.13E-06	1.06E-06	4.47E-06
19	8.00E-07	1.00E-06	9.00E-07	4.43E-06
20	4.00E-07	8.00E-07	6.00E-07	4.33E-06
21	3.25E-07	4.00E-07	3.63E-07	4.20E-06
22	2.25E-07	3.25E-07	2.75E-07	4.10E-06
23	1.00E-07	2.25E-07	1.62E-07	3.84E-06
24	5.00E-08	1.00E-07	7.50E-08	3.67E-06
25	3.00E-08	5.00E-08	4.00E-08	3.67E-06
26	1.00E-08	3.00E-08	2.00E-08	3.67E-06
27	1.00E-11	1.00E-08	5.01E-09	3.67E-06

Table 5.3.8-4 SCALE 27N18G Gamma Group Structure and ANSI Dose Factors

Group	Lower E [MeV]	Upper E [MeV]	Avg E [MeV]	Dose Factor [(rem/hr)/(γ/cm²/s)]
1	8.00E+00	1.00E+01	9.00E+00	8.77E-06
2	6.50E+00	8.00E+00	7.25E+00	7.48E-06
3	5.00E+00	6.50E+00	5.75E+00	6.37E-06
4	4.00E+00	5.00E+00	4.50E+00	5.41E-06
5	3.00E+00	4.00E+00	3.50E+00	4.62E-06
6	2.50E+00	3.00E+00	2.75E+00	3.96E-06
7	2.00E+00	2.50E+00	2.25E+00	3.47E-06
8	1.66E+00	2.00E+00	1.83E+00	3.02E-06
9	1.33E+00	1.66E+00	1.50E+00	2.63E-06
10	1.00E+00	1.33E+00	1.17E+00	2.21E-06
11	8.00E-01	1.00E+00	9.00E-01	1.83E-06
12	6.00E-01	8.00E-01	7.00E-01	1.52E-06
13	4.00E-01	6.00E-01	5.00E-01	1.17E-06
14	3.00E-01	4.00E-01	3.50E-01	8.76E-07
15	2.00E-01	3.00E-01	2.50E-01	6.31E-07
16	1.00E-01	2.00E-01	1.50E-01	3.83E-07
17	5.00E-02	1.00E-01	7.50E-02	2.67E-07
18	1.00E-02	5.00E-02	3.00E-02	9.35E-07

Table 5.3.8-5 LWT Cask Total Decay Heat [kW] for 25 Rods at Various Cool Times

	Burnup	Decay Time [d]						
Fuel Type	[MWd/MTU]	150	180	210	240	270	300	365
PWR	80,000	2.25	2.05	1.87	1.73	1.62	1.52	1.35
BWR 7×7	60,000	2.40	2.17	1.98	1.83	1.70	1.59	1.39
BWR 7×7	70,000	2.61	2.38	2.18	2.02	1.89	1.78	1.58
BWR 7×7	80,000	2.80	2.57	2.37	2.21	2.07	1.96	1.75
BWR 8×8	80,000	2.06	1.89	1.75	1.63	1.53	1.44	1.29

Table 5.3.8-6 PWR 80,000 MWd/MTU Fuel Model Neutron Source Term [n/sec/assy]

	Decay Time [d]						
Group	150	180	210	240	270	300	365
1	8.1050E+07	8.0010E+07	7.9030E+07	7.8110E+07	7.7240E+07	7.6400E+07	7.4730E+07
2	9.2480E+08	9.1140E+08	8.9880E+08	8.8710E+08	8.7610E+08	8.6570E+08	8.4510E+08
3	1.0070E+09	9.9240E+08	9.7890E+08	9.6620E+08	9.5430E+08	9.4310E+08	9.2080E+08
4	5.6830E+08	5.6090E+08	5.5400E+08	5.4740E+08	5.4130E+08	5.3540E+08	5.2360E+08
5	7.7310E+08	7.6320E+08	7.5400E+08	7.4520E+08	7.3690E+08	7.2900E+08	7.1320E+08
6	8.4670E+08	8.3590E+08	8.2570E+08	8.1610E+08	8.0700E+08	7.9830E+08	7.8090E+08
7	1.6590E+08	1.6370E+08	1.6170E+08	1.5980E+08	1.5800E+08	1.5630E+08	1.5290E+08
Total	4.3670E+09	4.3080E+09	4.2520E+09	4.2000E+09	4.1510E+09	4.1040E+09	4.0110E+09

Table 5.3.8-7 PWR 80,000 MWd/MTU Fuel Model Gamma Source Term [γ/sec/assy]

	Decay Time [d]						
Group	150	180	210	240	270	300	365
1	2.3232E+06	2.2933E+06	2.2655E+06	2.2394E+06	2.2149E+06	2.1918E+06	2.1458E+06
2	1.0942E+07	1.0801E+07	1.0670E+07	1.0547E+07	1.0432E+07	1.0323E+07	1.0106E+07
3	5.5776E+07	5.5059E+07	5.4390E+07	5.3764E+07	5.3175E+07	5.2619E+07	5.1514E+07
4	1.3897E+08	1.3719E+08	1.3552E+08	1.3396E+08	1.3249E+08	1.3110E+08	1.2835E+08
5	4.2790E+11	4.0245E+11	3.8014E+11	3.5939E+11	3.3983E+11	3.2136E+11	2.8470E+11
6	3.8055E+12	3.3306E+12	3.0956E+12	2.9155E+12	2.7535E+12	2.6020E+12	2.3025E+12
7	1.5053E+14	1.3842E+14	1.2854E+14	1.1969E+14	1.1155E+14	1.0400E+14	8.9386E+13
8	5.0113E+13	4.5330E+13	4.1850E+13	3.8948E+13	3.6392E+13	3.4088E+13	2.9742E+13
9	4.9111E+14	4.5948E+14	4.3646E+14	4.1614E+14	3.9727E+14	3.7955E+14	3.4454E+14
10	1.0333E+15	9.8515E+14	9.4552E+14	9.1017E+14	8.7765E+14	8.4736E+14	7.8780E+14
11	4.2618E+15	4.1142E+15	3.9785E+15	3.8505E+15	3.7284E+15	3.6117E+15	3.3748E+15
12	3.1096E+16	2.6322E+16	2.2653E+16	1.9844E+16	1.7692E+16	1.6036E+16	1.3594E+16
13	1.4249E+16	1.2805E+16	1.1793E+16	1.1042E+16	1.0449E+16	9.9572E+15	9.0869E+15
14	1.4614E+15	1.3614E+15	1.2732E+15	1.1934E+15	1.1206E+15	1.0535E+15	9.2448E+14
15	1.9165E+15	1.7798E+15	1.6605E+15	1.5544E+15	1.4588E+15	1.3717E+15	1.2061E+15
16	7.6172E+15	6.8766E+15	6.3117E+15	5.8531E+15	5.4626E+15	5.1189E+15	4.4821E+15
17	7.6978E+15	7.1504E+15	6.6731E+15	6.2484E+15	5.8655E+15	5.5167E+15	4.8539E+15
18	2.3353E+16	2.1519E+16	1.9991E+16	1.8675E+16	1.7514E+16	1.6472E+16	1.4518E+16
Total	9.3381E+16	8.3560E+16	7.5891E+16	6.9749E+16	6.4717E+16	6.0505E+16	5.3295E+16

Table 5.3.8-8 BWR 7×7 60,000 MWd/MTU Fuel Model Neutron Source Term [n/sec/assy]

	Decay Time [d]						
Group	150	180	210	240	270	300	365
1	1.0720E+07	1.0520E+07	1.0340E+07	1.0180E+07	1.0040E+07	9.9050E+06	9.6580E+06
2	1.2660E+08	1.2370E+08	1.2110E+08	1.1880E+08	1.1670E+08	1.1470E+08	1.1120E+08
3	1.3820E+08	1.3500E+08	1.3220E+08	1.2970E+08	1.2750E+08	1.2540E+08	1.2160E+08
4	7.5740E+07	7.4310E+07	7.3020E+07	7.1860E+07	7.0800E+07	6.9850E+07	6.8050E+07
5	1.0230E+08	1.0050E+08	9.8780E+07	9.7260E+07	9.5880E+07	9.4630E+07	9.2290E+07
6	1.1190E+08	1.0990E+08	1.0800E+08	1.0640E+08	1.0490E+08	1.0350E+08	1.0090E+08
7	2.1940E+07	2.1530E+07	2.1170E+07	2.0840E+07	2.0550E+07	2.0280E+07	1.9770E+07
Total	5.8740E+08	5.7550E+08	5.6470E+08	5.5500E+08	5.4630E+08	5.3830E+08	5.2350E+08

Table 5.3.8-9 BWR 7×7 60,000 MWd/MTU Fuel Model Gamma Source Term [γ/sec/assy]

	Decay Time [d]						
Group	150	180	210	240	270	300	365
1	3.2931E+05	3.2274E+05	3.1683E+05	3.1151E+05	3.0671E+05	3.0237E+05	2.9427E+05
2	1.5512E+06	1.5202E+06	1.4924E+06	1.4673E+06	1.4447E+06	1.4242E+06	1.3860E+06
3	7.9088E+06	7.7507E+06	7.6086E+06	7.4806E+06	7.3651E+06	7.2606E+06	7.0658E+06
4	1.9710E+07	1.9315E+07	1.8961E+07	1.8642E+07	1.8353E+07	1.8092E+07	1.7606E+07
5	1.1468E+11	1.0776E+11	1.0177E+11	9.6205E+10	9.0967E+10	8.6019E+10	7.6202E+10
6	1.0391E+12	8.9960E+11	8.3400E+11	7.8498E+11	7.4121E+11	7.0037E+11	6.1963E+11
7	4.5886E+13	4.2337E+13	3.9344E+13	3.6637E+13	3.4138E+13	3.1817E+13	2.7325E+13
8	1.3614E+13	1.2407E+13	1.1497E+13	1.0722E+13	1.0033E+13	9.4069E+12	8.2168E+12
9	1.3126E+14	1.2257E+14	1.1646E+14	1.1113E+14	1.0619E+14	1.0154E+14	9.2359E+13
10	3.0058E+14	2.8714E+14	2.7599E+14	2.6605E+14	2.5694E+14	2.4847E+14	2.3186E+14
11	1.1408E+15	1.1018E+15	1.0661E+15	1.0324E+15	1.0003E+15	9.6961E+14	9.0725E+14
12	9.4684E+15	7.9625E+15	6.8088E+15	5.9289E+15	5.2583E+15	4.7452E+15	3.9979E+15
13	3.8994E+15	3.4870E+15	3.2005E+15	2.9896E+15	2.8249E+15	2.6892E+15	2.4513E+15
14	4.3090E+14	4.0087E+14	3.7459E+14	3.5098E+14	3.2950E+14	3.0980E+14	2.7208E+14
15	5.6889E+14	5.2746E+14	4.9163E+14	4.6001E+14	4.3166E+14	4.0596E+14	3.5735E+14
16	2.3056E+15	2.0775E+15	1.9047E+15	1.7652E+15	1.6471E+15	1.5436E+15	1.3528E+15
17	2.3068E+15	2.1396E+15	1.9949E+15	1.8672E+15	1.7526E+15	1.6488E+15	1.4525E+15
18	7.0478E+15	6.4851E+15	6.0194E+15	5.6207E+15	5.2710E+15	4.9585E+15	4.3763E+15
Total	2.7661E+16	2.4647E+16	2.2305E+16	2.0441E+16	1.8923E+16	1.7662E+16	1.5527E+16

Table 5.3.8-10 BWR 7×7 70,000 MWd/MTU Fuel Model Neutron Source Term [n/sec/assy]

	Decay Time [d]						
Group	150	180	210	240	270	300	365
1	2.0300E+07	2.0020E+07	1.9760E+07	1.9520E+07	1.9290E+07	1.9090E+07	1.8680E+07
2	2.3450E+08	2.3060E+08	2.2700E+08	2.2370E+08	2.2070E+08	2.1800E+08	2.1260E+08
3	2.5560E+08	2.5140E+08	2.4760E+08	2.4400E+08	2.4080E+08	2.3780E+08	2.3210E+08
4	1.4280E+08	1.4070E+08	1.3890E+08	1.3720E+08	1.3560E+08	1.3410E+08	1.3120E+08
5	1.9370E+08	1.9100E+08	1.8860E+08	1.8630E+08	1.8420E+08	1.8220E+08	1.7840E+08
6	2.1200E+08	2.0910E+08	2.0640E+08	2.0390E+08	2.0160E+08	1.9940E+08	1.9520E+08
7	4.1540E+07	4.0960E+07	4.0430E+07	3.9940E+07	3.9490E+07	3.9060E+07	3.8230E+07
Total	1.1000E+09	1.0840E+09	1.0690E+09	1.0550E+09	1.0420E+09	1.0300E+09	1.0060E+09

Table 5.3.8-11 BWR 7×7 70,000 MWd/MTU Fuel Model Gamma Source Term [γ/sec/assy]

	Decay Time [d]						
Group	150	180	210	240	270	300	365
1	6.0324E+05	5.9443E+05	5.8638E+05	5.7897E+05	5.7215E+05	5.6585E+05	5.5368E+05
2	2.8412E+06	2.7998E+06	2.7618E+06	2.7269E+06	2.6948E+06	2.6650E+06	2.6077E+06
3	1.4485E+07	1.4273E+07	1.4079E+07	1.3901E+07	1.3737E+07	1.3586E+07	1.3293E+07
4	3.6093E+07	3.5565E+07	3.5082E+07	3.4638E+07	3.4229E+07	3.3851E+07	3.3121E+07
5	1.2918E+11	1.2149E+11	1.1474E+11	1.0848E+11	1.0258E+11	9.7000E+10	8.5934E+10
6	1.1503E+12	1.0061E+12	9.3500E+11	8.8057E+11	8.3162E+11	7.8586E+11	6.9541E+11
7	4.5889E+13	4.2245E+13	3.9241E+13	3.6544E+13	3.4060E+13	3.1754E+13	2.7290E+13
8	1.5067E+13	1.3671E+13	1.2642E+13	1.1778E+13	1.1013E+13	1.0322E+13	9.0142E+12
9	1.5436E+14	1.4472E+14	1.3769E+14	1.3149E+14	1.2572E+14	1.2029E+14	1.0955E+14
10	3.4479E+14	3.2983E+14	3.1746E+14	3.0640E+14	2.9622E+14	2.8673E+14	2.6805E+14
11	1.3888E+15	1.3419E+15	1.2988E+15	1.2579E+15	1.2190E+15	1.1817E+15	1.1059E+15
12	1.0027E+16	8.5551E+15	7.4228E+15	6.5551E+15	5.8895E+15	5.3763E+15	4.6175E+15
13	4.5056E+15	4.0651E+15	3.7549E+15	3.5230E+15	3.3394E+15	3.1861E+15	2.9133E+15
14	4.5235E+14	4.2171E+14	3.9475E+14	3.7041E+14	3.4818E+14	3.2773E+14	2.8843E+14
15	5.9741E+14	5.5540E+14	5.1883E+14	4.8637E+14	4.5715E+14	4.3055E+14	3.8002E+14
16	2.3773E+15	2.1503E+15	1.9773E+15	1.8369E+15	1.7174E+15	1.6122E+15	1.4174E+15
17	2.4086E+15	2.2405E+15	2.0940E+15	1.9640E+15	1.8467E+15	1.7400E+15	1.5374E+15
18	7.3510E+15	6.7875E+15	6.3182E+15	5.9142E+15	5.5579E+15	5.2383E+15	4.6398E+15
Total	2.9670E+16	2.6649E+16	2.4287E+16	2.2395E+16	2.0843E+16	1.9542E+16	1.7314E+16

Table 5.3.8-12 BWR 7×7 80,000 MWd/MTU Fuel Model Neutron Source Term [n/sec/assy]

	Decay Time [d]						
Group	150	180	210	240	270	300	365
1	3.8790E+07	3.8290E+07	3.7810E+07	3.7350E+07	3.6920E+07	3.6500E+07	3.5660E+07
2	4.4140E+08	4.3500E+08	4.2900E+08	4.2330E+08	4.1790E+08	4.1280E+08	4.0260E+08
3	4.8040E+08	4.7340E+08	4.6690E+08	4.6080E+08	4.5500E+08	4.4950E+08	4.3850E+08
4	2.7180E+08	2.6820E+08	2.6480E+08	2.6160E+08	2.5850E+08	2.5560E+08	2.4970E+08
5	3.6990E+08	3.6510E+08	3.6060E+08	3.5630E+08	3.5220E+08	3.4820E+08	3.4020E+08
6	4.0520E+08	4.0000E+08	3.9500E+08	3.9020E+08	3.8570E+08	3.8140E+08	3.7260E+08
7	7.9380E+07	7.8340E+07	7.7360E+07	7.6430E+07	7.5540E+07	7.4690E+07	7.2970E+07
Total	2.0870E+09	2.0580E+09	2.0310E+09	2.0060E+09	1.9820E+09	1.9590E+09	1.9120E+09

Table 5.3.8-13 BWR 7×7 80,000 MWd/MTU Fuel Model Gamma Source Term [γ/sec/assy]

	Decay Time [d]						
Group	150	180	210	240	270	300	365
1	1.0954E+06	1.0813E+06	1.0680E+06	1.0555E+06	1.0437E+06	1.0325E+06	1.0100E+06
2	5.1590E+06	5.0924E+06	5.0300E+06	4.9710E+06	4.9153E+06	4.8625E+06	4.7566E+06
3	2.6298E+07	2.5959E+07	2.5640E+07	2.5340E+07	2.5056E+07	2.4786E+07	2.4246E+07
4	6.5524E+07	6.4678E+07	6.3884E+07	6.3135E+07	6.2427E+07	6.1755E+07	6.0409E+07
5	1.4025E+11	1.3197E+11	1.2467E+11	1.1787E+11	1.1145E+11	1.0540E+11	9.3384E+10
6	1.2350E+12	1.0871E+12	1.0118E+12	9.5327E+11	9.0040E+11	8.5091E+11	7.5306E+11
7	4.5796E+13	4.2083E+13	3.9076E+13	3.6393E+13	3.3924E+13	3.1634E+13	2.7203E+13
8	1.6213E+13	1.4660E+13	1.3531E+13	1.2592E+13	1.1766E+13	1.1023E+13	9.6211E+12
9	1.7524E+14	1.6472E+14	1.5685E+14	1.4984E+14	1.4331E+14	1.3717E+14	1.2500E+14
10	3.8063E+14	3.6437E+14	3.5095E+14	3.3895E+14	3.2788E+14	3.1755E+14	2.9718E+14
11	1.6124E+15	1.5582E+15	1.5081E+15	1.4608E+15	1.4155E+15	1.3722E+15	1.2842E+15
12	1.0580E+16	9.1279E+15	8.0071E+15	7.1444E+15	6.4791E+15	5.9627E+15	5.1894E+15
13	5.0278E+15	4.5657E+15	4.2366E+15	3.9878E+15	3.7884E+15	3.6203E+15	3.3179E+15
14	4.6875E+14	4.3760E+14	4.1008E+14	3.8518E+14	3.6237E+14	3.4135E+14	3.0088E+14
15	6.1935E+14	5.7682E+14	5.3964E+14	5.0652E+14	4.7661E+14	4.4932E+14	3.9734E+14
16	2.4314E+15	2.2052E+15	2.0320E+15	1.8908E+15	1.7703E+15	1.6639E+15	1.4664E+15
17	2.4876E+15	2.3184E+15	2.1705E+15	2.0386E+15	1.9194E+15	1.8105E+15	1.6032E+15
18	7.5934E+15	7.0287E+15	6.5564E+15	6.1482E+15	5.7870E+15	5.4621E+15	4.8515E+15
Total	3.1441E+16	2.8406E+16	2.6022E+16	2.4101E+16	2.2517E+16	2.1181E+16	1.8871E+16

Table 5.3.8-14 BWR 8×8 80,000 MWd/MTU Fuel Model Neutron Source Term [n/sec/assy]

	Decay Time [d]						
Group	150	180	210	240	270	300	365
1	3.5570E+07	3.5120E+07	3.4700E+07	3.4290E+07	3.3910E+07	3.3540E+07	3.2800E+07
2	4.0480E+08	3.9910E+08	3.9380E+08	3.8870E+08	3.8390E+08	3.7940E+08	3.7040E+08
3	4.4060E+08	4.3450E+08	4.2870E+08	4.2320E+08	4.1810E+08	4.1320E+08	4.0340E+08
4	2.4930E+08	2.4610E+08	2.4310E+08	2.4020E+08	2.3750E+08	2.3490E+08	2.2970E+08
5	3.3930E+08	3.3500E+08	3.3100E+08	3.2710E+08	3.2350E+08	3.2000E+08	3.1300E+08
6	3.7160E+08	3.6690E+08	3.6250E+08	3.5830E+08	3.5430E+08	3.5050E+08	3.4270E+08
7	7.2790E+07	7.1870E+07	7.1000E+07	7.0170E+07	6.9380E+07	6.8630E+07	6.7120E+07
Total	1.9140E+09	1.8890E+09	1.8650E+09	1.8420E+09	1.8210E+09	1.8000E+09	1.7590E+09

Table 5.3.8-15 BWR 8×8 80,000 MWd/MTU Fuel Model Gamma Source Term [γ/sec/assy]

	Decay Time [d]						
Group	150	180	210	240	270	300	365
1	1.0111E+06	9.9843E+05	9.8657E+05	9.7541E+05	9.6486E+05	9.5486E+05	9.3484E+05
2	4.7618E+06	4.7023E+06	4.6464E+06	4.5938E+06	4.5441E+06	4.4971E+06	4.4027E+06
3	2.4273E+07	2.3970E+07	2.3685E+07	2.3417E+07	2.3163E+07	2.2923E+07	2.2442E+07
4	6.0480E+07	5.9723E+07	5.9013E+07	5.8344E+07	5.7712E+07	5.7114E+07	5.5915E+07
5	1.3406E+11	1.2615E+11	1.1916E+11	1.1266E+11	1.0654E+11	1.0075E+11	8.9259E+10
6	1.1796E+12	1.0388E+12	9.6696E+11	9.1101E+11	8.6048E+11	8.1319E+11	7.1969E+11
7	4.3512E+13	3.9982E+13	3.7126E+13	3.4578E+13	3.2233E+13	3.0058E+13	2.5849E+13
8	1.5435E+13	1.3964E+13	1.2896E+13	1.2005E+13	1.1222E+13	1.0515E+13	9.1811E+12
9	1.6587E+14	1.5590E+14	1.4845E+14	1.4181E+14	1.3563E+14	1.2981E+14	1.1830E+14
10	3.6038E+14	3.4497E+14	3.3223E+14	3.2084E+14	3.1033E+14	3.0051E+14	2.8115E+14
11	1.5243E+15	1.4731E+15	1.4258E+15	1.3810E+15	1.3382E+15	1.2973E+15	1.2140E+15
12	1.0033E+16	8.6556E+15	7.5925E+15	6.7743E+15	6.1433E+15	5.6535E+15	4.9201E+15
13	4.7720E+15	4.3323E+15	4.0194E+15	3.7827E+15	3.5932E+15	3.4334E+15	3.1462E+15
14	4.4637E+14	4.1676E+14	3.9060E+14	3.6690E+14	3.4520E+14	3.2519E+14	2.8665E+14
15	5.8943E+14	5.4903E+14	5.1370E+14	4.8221E+14	4.5375E+14	4.2778E+14	3.7831E+14
16	2.3111E+15	2.0962E+15	1.9316E+15	1.7974E+15	1.6829E+15	1.5817E+15	1.3939E+15
17	2.3651E+15	2.2044E+15	2.0638E+15	1.9384E+15	1.8250E+15	1.7215E+15	1.5243E+15
18	7.2203E+15	6.6839E+15	6.2352E+15	5.8471E+15	5.5038E+15	5.1949E+15	4.6141E+15
Total	2.9848E+16	2.6967E+16	2.4704E+16	2.2881E+16	2.1376E+16	2.0107E+16	1.7912E+16

Table 5.3.8-16 Fuel Axial Source Profile Parameters

Type	Burnup Peak to Average	Source	Exponent b	Average Source to Average Burnup	Source Peak to Average
PWR	1.08	Neutron	4.22	1.125	1.230
		Gamma	1.00	1.000	1.080
BWR	1.22	Neutron	4.22	1.582	1.463
		Gamma	1.00	1.000	1.220

Table 5.3.8-17 PWR Fuel Axial Source Profile

% Core Height	Burnup Profile	Photon Source	Neutron Source
0.00%	0.5470	0.5470	7.840E-02
2.50%	0.6358	0.6358	1.479E-01
5.00%	0.7247	0.7247	2.569E-01
7.50%	0.8135	0.8135	4.185E-01
10.00%	0.9023	0.9023	6.481E-01
12.50%	0.9912	0.9912	9.633E-01
15.00%	1.0800	1.0800	1.384E+00
50.00%	1.0790	1.0790	1.378E+00
85.00%	1.0800	1.0800	1.384E+00
87.50%	0.9912	0.9912	9.633E-01
90.00%	0.9023	0.9023	6.481E-01
92.50%	0.8135	0.8135	4.185E-01
95.00%	0.7247	0.7247	2.569E-01
97.50%	0.6358	0.6358	1.479E-01
100.00%	0.5470	0.5470	7.840E-02

Table 5.3.8-18 BWR Fuel Axial Source Profile

% Core Height	Burnup Profile	Photon Source	Neutron Source
0.00%	0.0430	0.0430	1.711E-06
2.50%	0.2392	0.2392	2.388E-03
5.00%	0.4353	0.4353	2.991E-02
7.50%	0.6315	0.6315	1.437E-01
10.00%	0.8277	0.8277	4.501E-01
12.50%	1.0238	1.0238	1.105E+00
15.00%	1.2200	1.2200	2.314E+00
50.00%	1.2190	1.2190	2.306E+00
55.00%	1.2200	1.2200	2.314E+00
55.01%	1.1800	1.1800	2.011E+00
80.00%	1.1810	1.1810	2.018E+00
82.50%	1.0379	1.0379	1.170E+00
85.00%	0.8958	0.8958	6.284E-01
87.50%	0.7536	0.7536	3.031E-01
90.00%	0.6115	0.6115	1.255E-01
92.50%	0.4694	0.4694	4.110E-02
95.00%	0.3272	0.3272	8.970E-03
97.50%	0.1851	0.1851	8.104E-04
100.00%	0.0430	0.0430	1.711E-06

Table 5.3.8-19 Fuel Region Homogenized Material Description [atom/b-cm]

SCALE Isotope	Number Density [atom/b-cm]		
	PWR	BWR 7x7	BWR 8x8
OXYGEN-16	1.04184E-02	1.72764E-02	1.27718E-02
CHROMIUM(SS304)	1.99453E-03	1.99453E-03	1.99453E-03
MANGANESE	1.98706E-04	1.98706E-04	1.98706E-04
IRON(SS304)	6.79292E-03	6.79292E-03	6.79292E-03
NICKEL(SS304)	8.83557E-04	8.83557E-04	8.83557E-04
ZIRCONIUM ALLOY	2.88833E-03	5.16316E-03	4.24529E-03
URANIUM-234	2.86507E-07	4.75102E-07	3.51224E-07
URANIUM-235	3.75064E-05	6.21953E-05	4.59785E-05
URANIUM-238	5.17142E-03	8.57554E-03	6.33956E-03

Table 5.3.8-20 Basket and Cask Shielding Material Composition [atom/b-cm]

Material	SCALE Isotope	Number Density [atom/b-cm]
Aluminum	ALUMINUM	6.03066E-02
Stainless Steel 304	CHROMIUM(SS304)	1.74286E-02
	MANGANESE	1.73633E-03
	IRON(SS304)	5.93579E-02
	NICKEL(SS304)	7.72070E-03
Lead	LEAD	3.29690E-02
Neutron Shield	HYDROGEN	5.99351E-02
	CARBON-12	1.07197E-02
	OXYGEN-16	2.46077E-02

Table 5.3.8-21 Basket Model Parameters

Parameter	Outer Dimension		Thickness	
	[in]	[cm]	[in]	[cm]
Array size	3.5600	9.0424	-	-
Fuel pin insert tube	0.6875	1.7463	0.0280	0.0711
Internal spacer	3.9350	9.9949	0.1875	0.4763
Void	5.0000	12.7000	0.5325	1.3526
Weldment tube	5.5000	13.9700	0.2500	0.6350
Void	5.7500	14.6050	0.1250	0.3175
Insert wall	8.5000	21.5900	1.3750	3.4925
Basket opening	8.8800	22.5552	-	-

Table 5.3.8-22 LWT Cask One-Dimensional Model for LWR High Burnup Rod Analysis

Model Region	Material	Outer Radius[cm]
Rod array	Fuel	5.1016
Spacer	SS304	5.6390
Spacer void	Void	7.1652
Weldment wall	SS304	7.8817
Weldment void	Void	8.2400
Insert wall	Aluminum	12.1809
Insert void	Void	12.7254
Basket	Aluminum	16.9863
Inner shell	SS304	18.8214
Lead Shield	Lead	33.2890
Lead Gap	Void	33.4264
Outer Shell	SS304	36.3728
Neutron Shield	Neutron Shield	49.0728
Shield Shell	SS304	49.1338

Table 5.3.8-23 LWT Cask Surface Neutron Dose Response Function

Surface Neutron Dose Response [(mrem/hr)/(10^{10} n/cm^3/sec)]			
Group	PWR	BWR-7×7	BWR-8x8
1	2.7193E+07	2.6380E+07	2.6835E+07
2	1.6896E+07	1.6513E+07	1.6726E+07
3	1.5997E+07	1.5593E+07	1.5829E+07
4	1.2227E+07	1.1960E+07	1.2127E+07
5	1.0406E+07	1.0101E+07	1.0295E+07
6	8.3940E+06	8.2487E+06	8.3427E+06
7	6.2803E+06	6.1775E+06	6.2441E+06

Table 5.3.8-24 LWT Cask Surface Gamma Dose Response Function

Surface Gamma Dose Response [(mrem/hr)/(10^{10} γ/cm^3/sec)]			
Group	PWR	BWR-7X7	BWR-8X8
1	1.2725E+03	1.0022E+03	1.1584E+03
2	1.6222E+03	1.2839E+03	1.4795E+03
3	1.7521E+03	1.3907E+03	1.5995E+03
4	1.6430E+03	1.3055E+03	1.5002E+03
5	1.3176E+03	1.0457E+03	1.2020E+03
6	8.4261E+02	6.6508E+02	7.6670E+02
7	4.5052E+02	3.5272E+02	4.0845E+02
8	1.7075E+02	1.3183E+02	1.5387E+02
9	4.8503E+01	3.6807E+01	4.3389E+01
10	5.5182E+00	4.0692E+00	4.8783E+00
11	1.6030E-01	1.1350E-01	1.3927E-01
12	1.5868E-03	1.0805E-03	1.3561E-03
13	1.4339E-08	9.2536E-09	1.1975E-08
14	5.4441E-25	3.3976E-25	4.4798E-25
15	0.0000E+00	0.0000E+00	0.0000E+00
16	0.0000E+00	0.0000E+00	0.0000E+00
17	0.0000E+00	0.0000E+00	0.0000E+00
18	0.0000E+00	0.0000E+00	0.0000E+00

Table 5.3.8-25 LWT Cask 2m Neutron Dose Response Function

2m Neutron Dose Response [(mrem/hr)/(10^{10} n/cm^3/sec)]			
Group	PWR	BWR-7X7	BWR-8X8
1	2.3145E+06	2.2330E+06	2.2792E+06
2	1.3767E+06	1.3396E+06	1.3604E+06
3	1.2981E+06	1.2593E+06	1.2821E+06
4	9.5362E+05	9.2901E+05	9.4445E+05
5	7.8702E+05	7.6091E+05	7.7751E+05
6	6.0300E+05	5.9196E+05	5.9909E+05
7	4.2815E+05	4.2161E+05	4.2585E+05

Table 5.3.8-26 LWT Cask 2m Gamma Dose Response Function

2m Gamma Dose Response [(mrem/hr)/(10^{10} γ/cm^3/sec)]			
Group	PWR	BWR-7X7	BWR-8X8
1	1.6112E+02	1.2688E+02	1.4667E+02
2	2.0395E+02	1.6141E+02	1.8600E+02
3	2.1743E+02	1.7261E+02	1.9851E+02
4	2.0052E+02	1.5935E+02	1.8310E+02
5	1.5806E+02	1.2547E+02	1.4421E+02
6	9.9064E+01	7.8207E+01	9.0147E+01
7	5.2070E+01	4.0775E+01	4.7212E+01
8	1.9335E+01	1.4930E+01	1.7425E+01
9	5.3870E+00	4.0885E+00	4.8193E+00
10	5.9731E-01	4.4050E-01	5.2806E-01
11	1.6841E-02	1.1924E-02	1.4631E-02
12	1.6212E-04	1.1039E-04	1.3855E-04
13	1.4138E-09	9.1234E-10	1.1807E-09
14	5.2387E-26	3.2694E-26	4.3107E-26
15	0.0000E+00	0.0000E+00	0.0000E+00
16	0.0000E+00	0.0000E+00	0.0000E+00
17	0.0000E+00	0.0000E+00	0.0000E+00
18	0.0000E+00	0.0000E+00	0.0000E+00

Table 5.3.8-27 Surface Dose Responses [mrem/hr] and Cask Decay Heat [kW] for Various Decay Times

Fuel	Burnup [GWd/MTU]	Source	Decay Time [d] 150	180	210	240	270	300	365
PWR	80	Neutron	35.2	34.7	34.3	33.8	33.4	33.0	32.3
		Gamma	53.1	49.0	45.8	43.0	40.4	38.0	33.3
		Total	88.3	83.7	80.1	76.8	73.8	71.1	65.6
		Heat	2.3	2.0	1.9	1.7	1.6	1.5	1.3
BWR 7×7	80	Neutron	98.6	97.2	96.0	94.7	93.6	92.5	90.3
		Gamma	53.6	49.5	46.4	43.6	41.0	38.6	34.0
		Total	152.2	146.8	142.3	138.3	134.6	131.1	124.3
		Heat	2.8	2.6	2.4	2.2	2.1	2.0	1.8
	70	Neutron	52.1	51.3	50.6	49.9	49.3	48.7	47.6
		Gamma	51.4	47.5	44.4	41.7	39.3	36.9	32.4
		Total	103.5	98.8	95.0	91.6	88.5	85.6	80.0
		Heat	2.6	2.4	2.2	2.0	1.9	1.8	1.6
	60	Neutron	27.9	27.3	26.8	26.3	25.9	25.5	24.8
		Gamma	48.8	45.1	42.2	39.5	37.1	34.9	30.6
		Total	76.7	72.4	68.9	65.8	63.0	60.4	55.4
		Heat	2.4	2.2	2.0	1.8	1.7	1.6	1.4
BWR 8×8	80	Neutron	71.4	70.4	69.5	68.6	67.8	67.1	65.5
		Gamma	46.2	42.7	39.9	37.5	35.3	33.3	29.3
		Total	117.5	113.1	109.5	106.2	103.2	100.4	94.9
		Heat	2.1	1.9	1.7	1.6	1.5	1.4	1.3

Table 5.3.8-28 2m Dose Responses [mrem/hr] and Cask Decay Heat [kW] for Various Decay Times

Fuel	Burnup [GWd/MTU]	Source	Decay Time [d] 150	180	210	240	270	300	365
PWR	80	Neutron	2.3	2.2	2.2	2.2	2.1	2.1	2.1
		Gamma	5.6	5.2	4.8	4.5	4.3	4.0	3.5
		Total	7.9	7.4	7.0	6.7	6.4	6.1	5.6
		Heat	2.3	2.0	1.9	1.7	1.6	1.5	1.3
BWR 7×7	80	Neutron	5.3	5.2	5.1	5.1	5.0	5.0	4.8
		Gamma	5.0	4.6	4.3	4.1	3.8	3.6	3.2
		Total	10.3	9.8	9.5	9.2	8.8	8.6	8.0
		Heat	2.8	2.6	2.4	2.2	2.1	2.0	1.8
	70	Neutron	2.8	2.8	2.7	2.7	2.6	2.6	2.6
		Gamma	4.8	4.4	4.2	3.9	3.7	3.4	3.0
		Total	7.6	7.2	6.9	6.6	6.3	6.1	5.6
		Heat	2.6	2.4	2.2	2.0	1.9	1.8	1.6
	60	Neutron	1.5	1.5	1.4	1.4	1.4	1.4	1.3
		Gamma	4.6	4.2	3.9	3.7	3.5	3.3	2.9
		Total	6.1	5.7	5.4	5.1	4.9	4.6	4.2
		Heat	2.4	2.2	2.0	1.8	1.7	1.6	1.4
BWR 8×8	80	Neutron	3.8	3.8	3.7	3.7	3.6	3.6	3.5
		Gamma	4.3	4.0	3.7	3.5	3.3	3.1	2.7
		Total	8.1	7.8	7.5	7.2	6.9	6.7	6.3
		Heat	2.1	1.9	1.7	1.6	1.5	1.4	1.3

Table 5.3.8-29 Loading Table for PWR and BWR High Burnup Rods Showing Minimum Required Cool Time as a Function of Burnup and Enrichment

Fuel Type	Burnup, b [GWd/MTU]	Minimum Cool Time [d]
PWR	$b \leq 80$	150
BWR 7x7	$b \leq 60$	210
	$60 < b \leq 70$	240
	$70 < b \leq 80$	270
BWR 8x8[1]	$b \leq 80$	150

[1] Includes rods from all larger BWR assembly arrays (e.g., 9×9, 10×10).

Chapter 6

6.3.4 PWR and BWR Rods in a Rod Holder or Fuel Assembly Lattice

The NAC-LWT cask may transport up to 25 intact PWR or BWR fuel rods that are in a fuel rod holder or fuel assembly lattice. Up to 14 of 25 PWR or BWR fuel rods in a fuel rod holder may be classified as damaged.

Nonfuel-bearing irradiated guide tubes and water rods may be included in the rod holder. These components displace moderator space between fuel rods and reduce the maximum amount of fissile material in the cask. The model developed in this section, therefore, bounds the inclusion of nonfuel-bearing materials such as guide tubes and water rods in the NAC-LWT rod holder/insert.

6.3.4.1 Intact PWR or BWR Rods in a Rod Holder or Fuel Assembly Lattice

This section describes the methodology and the models used in the criticality analysis of the NAC-LWT with 25 design basis PWR or BWR rods in a rod holder or fuel assembly lattice. The methodology uses the CSAS25 criticality sequence from the SCALE 4.3 computer code package with the 27-group END/B-IV cross-section set. CSAS25 is the control sequence for the Material Information Processor (MIP), BONAMI, NITAWL-II and KENO-Va computer codes. The Material Information Processor generates number densities and prepares the geometry data for the resonance self shielding calculation. BONAMI and NITAWL-II calculate the resonance corrected cross sections in AMPX working format. KENO-Va uses the Monte Carlo technique to calculate the k_{eff} of a system. In these analyses, approximately 300 batches of 1000 neutrons per batch are tracked through the system.

Description of Calculational Models

The KENO-Va model of the NAC-LWT with 25 intact PWR or BWR fuel rods includes a triangular lattice formation of design basis rods centered in the cask cavity. No credit is taken for geometry control provided by either the rod holder or the fuel assembly lattice. The fuel rods, cask cavity and radial shields are explicitly modeled as shown in Figure 6.3.4-2. The KENO-Va model has two UNITs. UNIT 1 represents a PWR or BWR rod cell. It uses concentric CYLINDERs to model the fuel pellet, clad gap, and the cladding of the fuel rod. UNIT 2 is the GLOBAL UNIT containing CYLINDERs that model the cask, cavity, steel liners, and shields. There are 25 HOLEs placed in the cask cavity with X, Y, and Z coordinates that place rods in a triangular lattice position. The cask outer CYLINDER is surrounded by a CUBOID, and reflecting boundary conditions are imposed on the sides, top and bottom which simulates an infinite array of casks of infinite length. Adjusting the X-Y spacing of the CUBOID surrounding the cask varies cask center-to-center spacing. The material properties used in the model are shown in Table 6.3.4-1.

To determine the optimum configuration, cask k_{eff} is studied as a function of fuel rod pitch within the cask cavity. This is done by changing the coordinates of the rod HOLEs. Twenty different pitch values that range from the most compact configuration to the most dispersed configuration are evaluated. Figure 6.3.4-1 shows a simplified view of the cask with three different configurations. The analysis is performed for accident conditions with water at 1 gm/cc modeled between the fuel rods, in the cask cavity surrounding the rods. In addition, the neutron shield and cask exterior contain no water. The analysis is performed with these conditions with a dry and a wet clad gap.

An infinite array KENO-Va model of the NAC-LWT cask with 25 PWR or BWR fuel rods at the optimum pitch is used to evaluate the reactivity of the cask. The water moderator is allowed to vary in the cavity and outside the cask under normal conditions and is allowed to vary inside the neutron shield tank under accident conditions. Cask center-to-center spacing is varied by adjusting the dimensions of the CUBOID surrounding the cask. The k_{eff} results of this infinite array model are always below 0.95 including all biases and uncertainties.

Package Regional Densities

The composition densities (gm/cc) and nuclide number densities (atm/b-cm) calculated by the material information processor and used in the subsequent criticality analyses are shown in Table 6.3.4-1.

6.3.4.2 Damaged PWR and BWR Rods in a Rod Holder

This section describes the methodology and the models used in the criticality analysis of the NAC-LWT with 25 PWR or BWR rods, up to 14 of which may be damaged. Although the NAC-LWT payload is limited to 14 damaged fuel rods in a 25-rod shipment, the analysis conservatively considers all 25 rods as failing during transport.

The methodology uses the CSAS25 criticality sequence from the SCALE 4.3 computer code package with the 27-group ENDF/B-IV cross-section set. CSAS25 is the control sequence for the Material Information Processor, BONAMI, NITAWL-II and KENO-Va computer codes. The Material Information Processor generates number densities and prepares the geometry data for the resonance self-shielding calculation. BONAMI and NITAWL-II calculate the resonance corrected cross-sections in AMPX working format. KENO-Va uses the Monte Carlo technique to calculate the k_{eff} of a system. In these analyses, approximately 300 batches of 1,000 neutrons per batch are tracked through the system.

Description of Calculational Models

Two calculational models were employed to evaluate the NAC-LWT system reactivity with damaged fuel rods.

The first model explicitly models unclad UO_2 rods in a triangular pitch. System reactivity is maximized by increasing the number of fuel rods while decreasing the rod diameter to conserve fuel area in the infinite height model (i.e., reflective boundary conditions are placed on the active fuel region). Fuel rod arrays of 25, 37 and 61 rods are considered. The latter two arrays are hexagonal with no lattice vacancies. For each of the three postulated rod arrays, the maximum reactivity pitch is determined for both PWR and BWR rods. System reactivity is determined using an axially infinite cask model in an infinite cask array. In establishing the trend of increasing reactivity with larger rod arrays, k_{eff} values for the explicit rod cases are calculated with full density water in the cask interior, exterior, and neutron shield. Void exterior and void neutron shield (accident) conditions are considered for the 61 rod array in addition to preferential flooding of the cask cavity. The maximum reactivity configuration for 61 rods (with an active fuel cross-sectional area equivalent to 25 intact rods) is shown in Figure 6.3.4-3. Fuel rod arrays with greater than 61 rods are not considered. As demonstrated in Section 0, increasing the number of fuel rods modeled increases the cross-sectional area of the most reactive lattice. The cross-sectional area required for the 61-rod array exceeds the area available in the interior of the rod holder and, therefore, represents a bounding, conservative configuration.

The second model considers a homogenized mixture of UO_2 and water with a square cross-section and finite axial height within the NAC-LWT fuel rod holder. The square cross-sectional area of the rod holder is conservatively based on the exterior width of the rod holder, 13.97 cm. Based on the maximum BWR pellet diameter and fuel length of 150 inches, the finite axial height of the fuel mixture is calculated based on various UO_2 volume fractions. The UO_2 volume fraction is varied until the maximum reactivity is determined. System reactivity is determined using an infinite cask array with a periodic reflection axial boundary condition. Given the limiting UO_2/water fuel material description, water moderation variations are considered in the cask cavity (outside the rod holder), the cask exterior, and the cask neutron shield. The neutron shield material definition is tied to the exterior moderator definition; a void exterior includes a void neutron shield. Thus, the accident condition of loss of neutron shielding is explicitly modeled when the exterior moderator is set to void. Figure 6.3.4-4 and Figure 6.3.4-5 give dimensions of the maximum reactivity homogenized mixture configuration of finite extent.

Package Regional Densities

The composition densities (gm/cc) and nuclide number densities (atm/b-cm) calculated by the material information processor and used in the subsequent criticality analyses are identical to those shown for intact fuel evaluations Figure 6.3.4-1. Additional material densities may be obtained from the sample input/output file provided in Section 6.6.10.

Figure 6.3.4-1 Triangular Pitch Lattice Formation of 25 PWR Rods

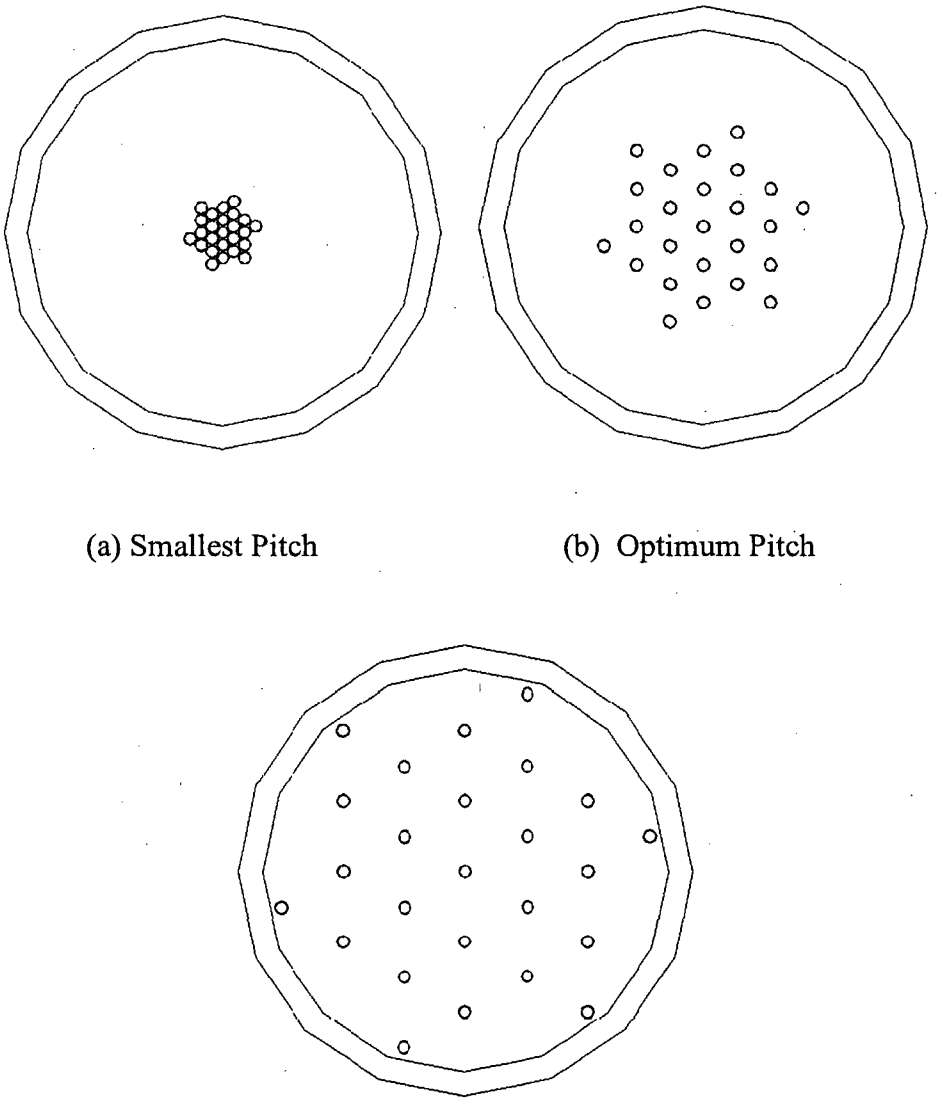

(a) Smallest Pitch (b) Optimum Pitch

(c) Maximum Pitch

Figure 6.3.4-2 KENO-Va Model of the NAC-LWT Cask with 25 PWR Rods
(Dimensions in centimeters)

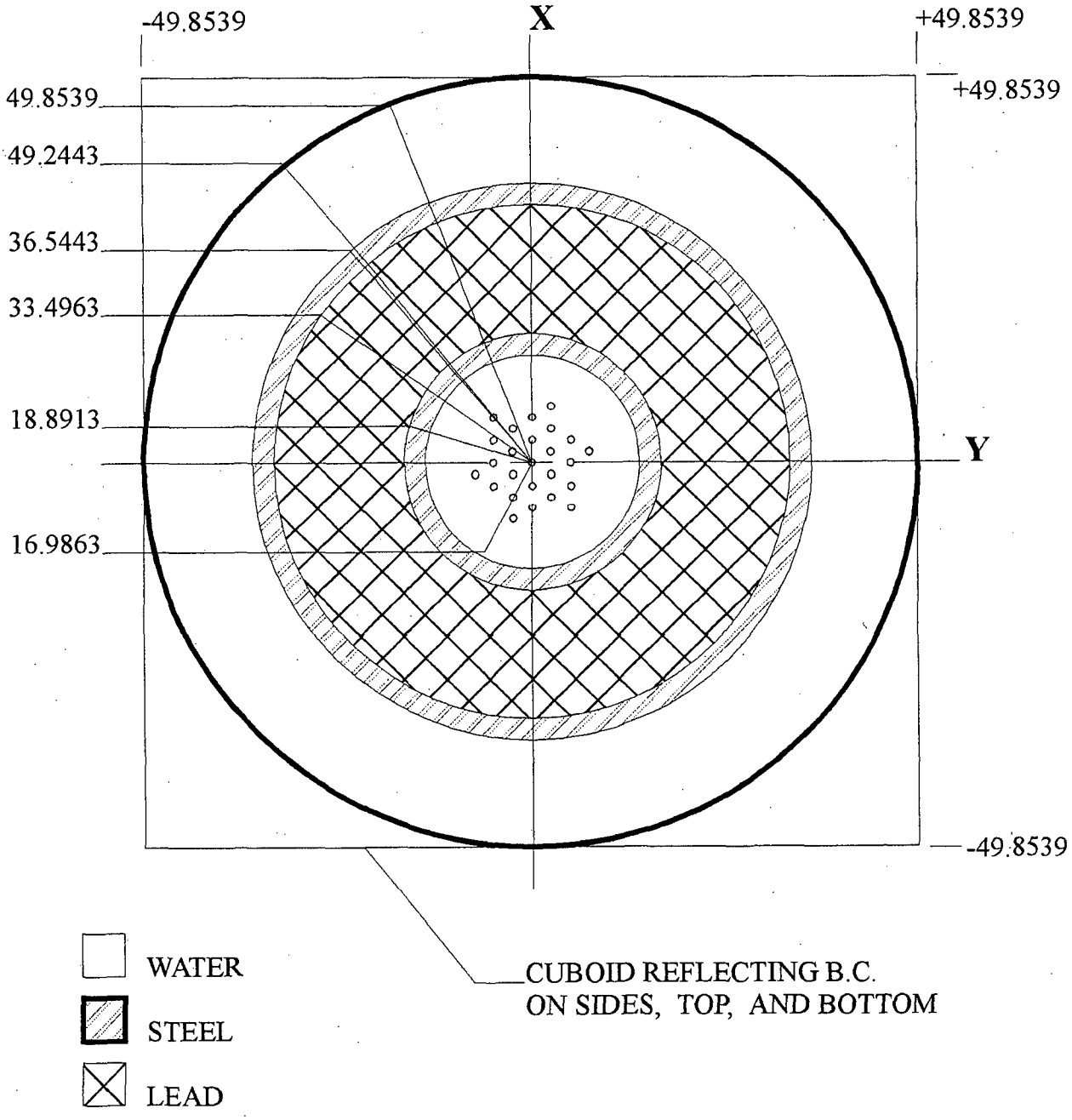

Figure 6.3.4-3 Maximum Reactivity Triangular Pitch Lattice Formation of Damaged Fuel Rods

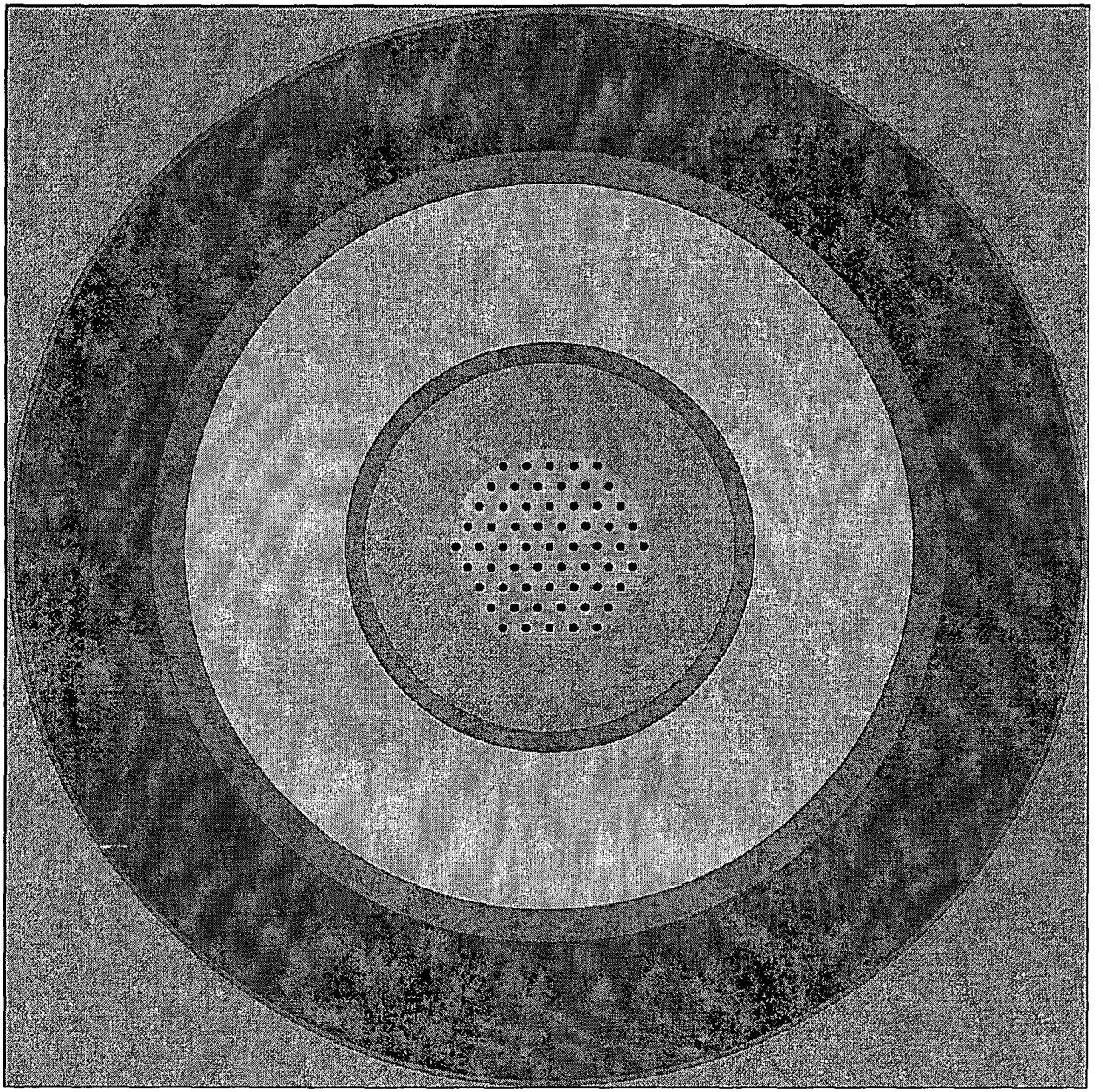

Figure 6.3.4-4 KENO-Va Model of the NAC-LWT Cask with Damaged Fuel Rods – Radial Detail

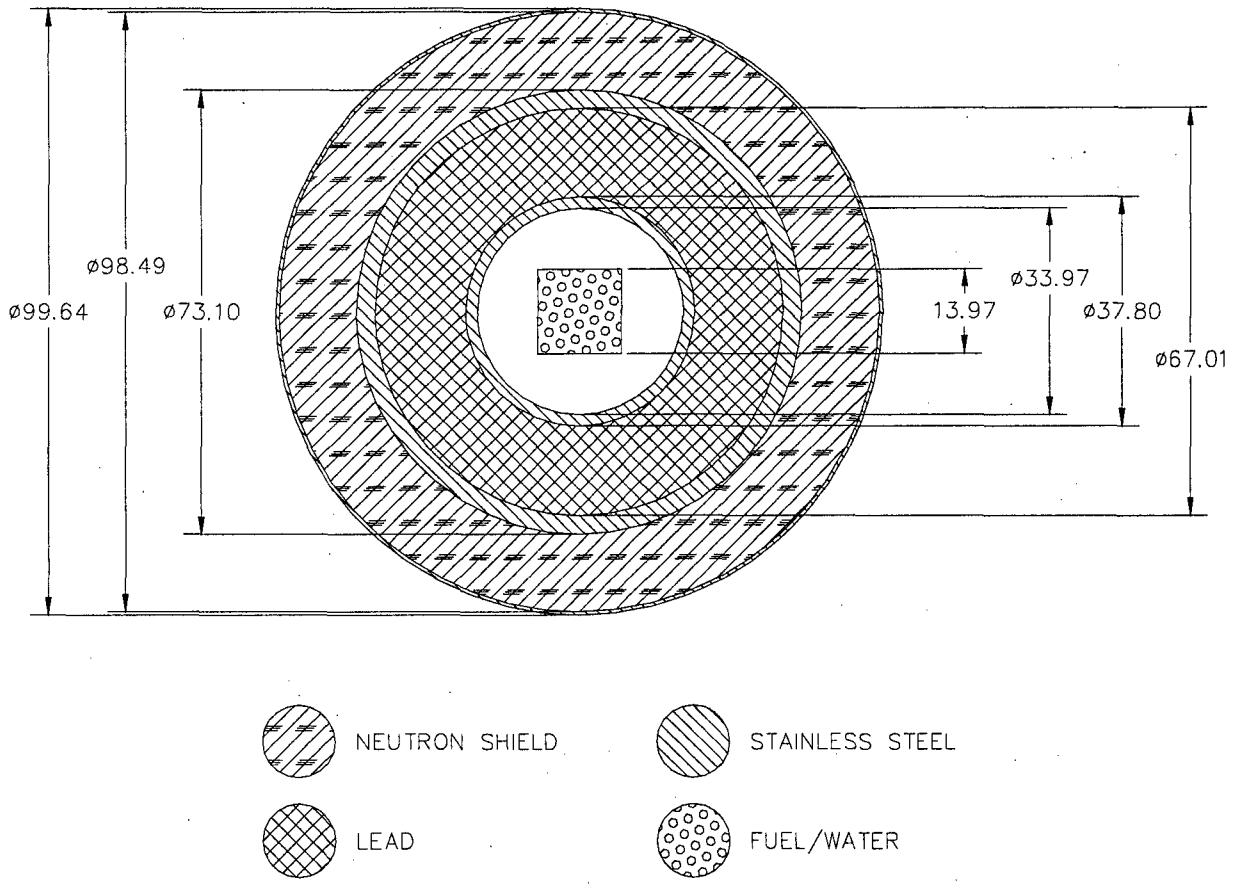

(Dimensions in centimeters)

Figure 6.3.4-5 KENO-Va Model of the NAC-LWT Cask with Damaged Fuel Rods – Axial Detail

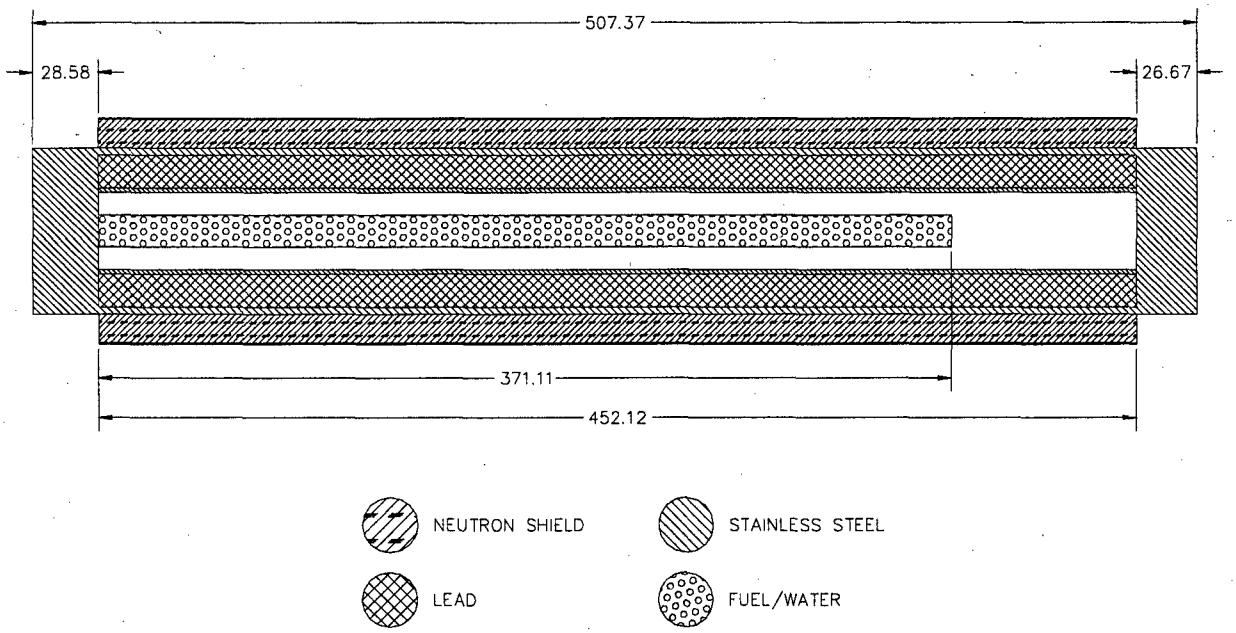

(Dimensions in centimeters)

Table 6.3.4-1 Compositions and Number Densities Used in the Criticality Analysis of PWR and BWR Rods

Material	5.0% Enriched UO2	Zirconium Alloy	H2O	304 Stainless Steel	Pb	Al
Density, gm/cc	10.412	6.56	0.9982	7.920	11.344	2.702
Nuclide	atm/b-cm					
Uranium 235	1.176E-3					
Uranium 238	2.206E-2					
Oxygen	4.647E-2		3.338E-2			
Hydrogen			6.677E-2			
Zirconium Alloy		4.331E-2				
Iron				5.936E-2		
Chromium				1.743E-2		
Nickel				7.721E-3		
Manganese				1.736E-3		
Lead					3.297E-2	
Aluminum						6.031E-2

Chapter 7

7 OPERATING PROCEDURES

This chapter describes the generic operating procedures for loading, unloading and preparing the NAC-LWT package for transport. These procedures shall be implemented to ensure the package is used in accordance with Certificate of Compliance (CoC) No. 9225 for the NAC-LWT packaging.

These procedures are based on generic site conditions and assume that the package arrives at the handling site with the appropriate internals installed in the cask. Additional operations and/or modifications (i.e., sequence of operations, use of parallel operations, etc.) to these procedures to address site-specific conditions may be required for each user's facility. These additional operations and/or modifications will be documented in site-specific procedures.

In addition, site-specific procedures may incorporate signoffs for activities or operational sequences as they are performed. Oversight organizations, such as Quality Assurance or Quality Control, may participate in certain package handling operations. The use of signoffs can assist the user in assuring that critical steps are not overlooked, that the package is handled in accordance with the CoC and Safety Analysis Report (SAR), and that appropriate records are retained as required by 10 CFR 71.91.

The NAC-LWT package is designed and certified to transport numerous fissile and radioactive contents, as described in the CoC, as a Type B(U)F-96 package in a leaktight containment boundary configuration.

The NAC-LWT is also certified for the transport of Tritium Producing Burnable Absorber Rod (TPBAR) contents, as described in the CoC, as a Type B(M)-96 package in a leaktight containment boundary configuration. NAC-LWT cask units designated for the transport of TPBAR contents shall be configured with Alternate B vent and drain port covers in accordance with the license drawings, and subjected to the additional hydrostatic test per the requirements of Section 8.1.2.

Loaded shipments received at U.S. Department of Energy (DOE) facilities shall be receipt surveyed and monitored in accordance with DOE regulations. As required, the shipper will be notified of any survey or shipping discrepancy and the shipper will ensure appropriate regulatory notifications are completed.

When the package is handled in accordance with the procedures provided herein, and is loaded within the conditions of the CoC and the SAR, the resulting occupational exposures will be maintained as low as reasonably achievable (ALARA), as required by 10 CFR 20.

7.1 Procedures for Loading Packages

For the shipment of loaded packages, the cavity shall be dry, the contents and nameplate package identification, corresponding to the contents, shall be verified as correct, and the other applicable conditions of the Certificate of Compliance (CoC) shall be verified as met. Site-specific procedures for dry handling and loading of fuel assemblies and other authorized contents will be prepared to incorporate the dry transfer system components required to safely and efficiently load the NAC-LWT at each loading facility. Dry loading and transfer procedures are not specifically described in the individual loading procedures due to these facility and required equipment variations. Content configurations may require spacers, baskets, basket inserts, canisters, etc., to support and/or control the content geometry during transport. The transport configurations identifying the specific contents and components required are specified in the license drawings. Solid, irradiated and contaminated hardware will generally be loaded wet utilizing the procedure guidance of Section 7.1.1. Alternatively, the solid, irradiated and contaminated hardware can be loaded dry utilizing dry loading procedures (i.e., per Section 7.1.2) modified to the requirements of the dry loading facilities.

Two port cover designs are available for use. The alternate port cover has an O-ring along the barrel and a Viton® O-ring on the inner end of the port cover. The alternate port cover was developed to provide a leaktight containment boundary and to facilitate ease of installation. The second port cover design is the Alternate B port cover that has two face seals on the inner end of the port cover. The Alternate B port cover was developed to provide a high-pressure and leaktight containment boundary and is required to be installed for the transport of TPBAR contents. The two port cover designs can be used interchangeably for authorized contents not requiring a high-pressure containment boundary capability.

The alternate port cover bolts are torqued to 100 ± 10 inch-pounds. The Alternate B port cover bolts are torqued to 285 ± 15 inch-pounds to ensure compression of the metallic containment O-ring seal.

As required for the TPBAR contents, procedures will specify the use of the Alternate B port covers. In these loading procedures, the more restrictive Alternate B port cover helium leakage rate testing is described. For other content loading procedures, either port cover design can be used. However, if the Alternate B port covers are used, the metallic O-ring seal will be replaced for each transport following component removal and the helium maintenance leakage rate test is required to be performed.

For cask loading operations performed under water or when water is introduced into the cask cavity, the cask cavity is required to be blown down to remove the cavity water, vacuum dried, verified as dry, and helium backfilled prior to final closure and leakage testing. The cavity is vacuum dried by attaching a vacuum pump to the vent and/or drain port and evacuating the cavity to a pressure of less than 10 torr (13 mbar), and continuing to vacuum pump for an additional 15 minutes. If the cavity pressure rise is less than 5 torr (6.7 mbar) during a 10-minute isolation and hold period, there is no free water in the cavity and the cask cavity is verified as dry. Final containment closure and leakage testing operations in preparation for transport can proceed. If the pressure rise is >5 torr (6.7 mbar), the vacuum drying will be continued until the dryness verification criteria are met. The successful performance of the dryness verification and backfilling the cavity with helium ensures that there is no free water in the cavity and oxidation of the cask's contents is precluded. When the cask is loaded in a dry cell or under other conditions where no water is introduced into the cask cavity, the procedure sequences for cavity blow down, vacuum drying and dryness verification can be eliminated and the loading sequence can proceed directly to final closure, containment boundary leakage testing and helium backfill operations.

7.1.1 Procedures for Wet Loading of LWR Fuel Assemblies and Canistered LWR Fuel Rods

The procedures for wet loading the NAC-LWT with LWR fuel are as follows:

1. Perform a receipt inspection of the empty cask and trailer/ISO container, inspecting for transport damage.
2. Position the trailer in the designated cask unloading area. Set the trailer brakes and chock the wheels to prevent unintended movement. If site-specific conditions exist that require the trailer to move to allow the cask to be uprighted on its rotation trunnions, release brakes and remove the chocks when required to complete uprighting operations. If an ISO container is used, it may be removed from the trailer and secured in the unloading area.
3. Remove the personnel barrier or the roof and roof cross-members from the ISO container.

   Note: Verify that the package nameplate displays the correct package identification number in accordance with the CoC.

4. Perform a Health Physics survey of the cask and adjacent surfaces of the trailer.

   Note: A receiving survey of the cask and transporter must be performed as soon as practicable after arrival at the site to assure compliance with 10 CFR 20, 10 CFR 71.87(i) and 10 CFR 71.47, and to assure timely reporting of any reportable noncompliance.

5. Remove the top and bottom impact limiters.
6. Remove the cask tie-down strap.
7. Using the lifting yoke with the guides removed, engage the lifting trunnions. Raise the cask to vertical by rotating the cask rotation sockets on the rear cask supports, moving the crane and/or trailer as required to keep the lift yoke engaged to the trunnions and the cask engaged in the rear supports. When the cask is fully vertical, lift the cask from the supports and remove it from the trailer/container.
8. Place the cask in the cask preparation area or other designated location. Disengage the lifting yoke. Clean cask surfaces of road dirt as required for entry into the spent fuel pool.
9. Visually inspect the neutron shield tank fill, drain and level inspection plugs for signs of neutron shield fluid leakage. If leakage is detected or suspected, verify shield tank fluid level and correct, as required.
10. Remove the vent and drain valve port covers. Prior to reinstallation of the port covers, carefully inspect the valve port cover O-ring seals and, if the O-rings show any damage, replace them with approved spares. Ensure that the replacement O-rings are properly installed and seated. Visually inspect the valved quick-disconnect nipples and replace them, if necessary.

    Note: For Alternate B port covers, replace the metallic O-ring with an approved spare prior to reinstallation.
11. Remove closure lid bolts. Attach the lid lift slings to the closure lid. Remove the closure lid and set it on a support that is suitable for radiological control and for maintaining the cleanliness of the closure lid. Prior to reinstallation of the lid, carefully inspect the Teflon O-ring seal in the underside of the closure lid and, if it shows any damage, replace it. Remove the metallic O-ring and replace it with an approved spare. Ensure that the replacement O-rings are properly installed and seated. Inspect the lid bolts and replace any that are damaged.
12. Visually inspect the inner cavity for foreign material or damage. Install or verify the presence of the proper drain tube and basket assembly.
13. Fill the cask cavity with clean water.
14. Install lift yoke arm guides and remote actuation component on the cask lifting yoke.
15. Engage the cask lifting yoke with the cask lifting trunnions and pick up the cask. Carefully lower the cask to the bottom of the cask loading area. Rinse the cask surfaces with clean water to minimize cask surface contamination.
16. Disengage the lifting yoke from the cask and remove the yoke from the pool, if necessary, to provide fuel loading clearance.
17. Identify the fuel assembly(ies) or canistered LWR fuel rods to be loaded. Verify the identified materials comply with the content conditions and authorized quantities as specified in the CoC.

18. Pick up the fuel assembly or transport canister containing individual fuel rods, using the required grapple system.

    Note: See Section 7.1.8 procedures for instructions for loading and preparing PWR or BWR rods and nonfuel-bearing components in a transport canister.

19. Position the fuel contents over the cask and carefully lower them into the cask to avoid damage to the cask sealing surfaces. Confirm that the fuel assembly (or transport canister and insert, or material container) is fully seated, then release the grapple from the fuel assembly (or transport canister and insert) and raise the grapple to the full up position. Repeat this step as necessary to load multiple assemblies or containers (if required).

20. Position the cask lifting yoke over the cask closure lid. Attach the slings to the closure lid and cask lifting yoke. Lower the yoke over the cask.

21. Position the closure lid over the cask and slowly lower it into place using the cask and lid match marks as guides. Visually confirm that the closure lid is seated.

22. Lower the cask handling yoke to slack the closure lid cables. Engage the cask lifting trunnions with the yoke and begin lifting.

    Note: Visually verify the yoke engagement before lifting the cask.

23. Raise the cask until the lid is slightly above the surface of the pool. At the option of the licensee/user, a number of closure lid bolts (i.e., 4 to 12) may be installed hand tight.

24. Raise the cask clear of the pool, rinsing the yoke and cask with clean water.

25. Transfer the cask to the decontamination pit or other work area. Remove the yoke and lid lift slings.

26. Install and tighten the 12 closure lid bolts to 260 ± 20 ft-lb in three passes, using the torque sequence stamped on the closure lid.

27. At the option of the licensee/user, a 25 to 50 gallon clean water flush of the cask cavity may be performed by connecting a valved, clean water line to the drain valve and a valved drain line to the vent valve. After the cavity flushing is completed, if performed, disconnect the water supply and drain lines.

28. Connect a gas supply line to the vent valve and the drain line to the drain valve.

29. Open the nitrogen or helium gas supply valve and pressurize the cask cavity (< 30 psig) to force any residual water out the drain line. Continue to supply pressurized gas to the cask for a minimum of five minutes after the last residual free water discharges from the drain. Remove the drain and gas supply lines and attach a vacuum drying system (VDS) to the vent.

30. Evacuate the cask cavity to less than or equal to 10 torr (13 mbar) and continue vacuum pumping for a minimum of 15 minutes.

31. At the end of the vacuum pumping period, isolate the cask cavity from the vacuum pump and stop the vacuum pump. Monitor the cask cavity pressure for a minimum of 10 minutes. If the pressure rise is less than 5 torr (6.7 mbar), the cavity is verified as dry of

free water. If the pressure rise is >5 torr (6.7 mbar), repeat vacuum drying until the dryness verification results are satisfactory.

32. Backfill the cask cavity with helium to 0 psig (1 atmosphere, absolute), +1, -0 psi and disconnect the VDS from the vent valve.

33. Perform a helium leakage test of the closure lid containment O-ring using a Helium Mass Spectrometer Leak Detector (He MSLD) in accordance with the procedural requirements of Section 8.1.3.1, Steps 3 through 10.

34. Install the vent and drain alternate port covers and torque the bolts to 100 ±10 inch-pounds.

35. If an alternate port cover containment O-ring seal was replaced, perform a helium leakage test on the affected port cover using a He MSLD in accordance with the requirements of Section 8.1.3.2.2.

36. If the alternate port cover containment seal was inspected and accepted for reuse, perform a gas pressure drop leakage test on the affected port cover as follows.

    a. Install a pressure test fixture to the port cover test port, including a calibrated pressure gauge with a minimum sensitivity of 0.25 psi.

    b. Pressurize the port cover seal annulus to 15 psig, +1, -0 psi.

    c. Isolate the gas supply and observe the pressure gauge for a minimum of five minutes.

    d. The acceptance criterion for the test is no measurable drop in pressure during the minimum test time. An acceptable test assures that the minimum assembly verification leakage test sensitivity is achieved.

    Note: Alternate B port covers, if used, require the satisfactory completion of a helium maintenance leakage rate test to confirm a leaktight seal condition for each loaded transport. Install the Alternate B port cover and perform the maintenance leakage rate test per the requirements of Section 8.1.3.3.2.

37. Decontaminate the cask surfaces. Survey the cask for surface contamination and radiation dose rates.

    Note: Ensure compliance with 10 CFR 71.87(i) and 10 CFR 71.47.

38. Remove lift yoke arm guides. Engage the cask lifting yoke to the lifting trunnions.

39. Lift the cask and position the cask rotation sockets in the rear rotation trunnions of the rear support structure. Carefully lower the cask to the horizontal transport orientation resting on the front saddle by moving the crane and/or the trailer as required to maintain cask engagement to the rear supports.

40. Disengage the lifting yoke from the lifting trunnions and remove it from the area.

41. Install the cask tie-down strap. Install the top and bottom impact limiters.

42. Install tamper-indicating device (TID) to an attachment point on the top impact limiter.

43. Install ISO container bracing and lid or personnel barrier.

44. Complete radiation and contamination surveys of the external surfaces of the package and record the data. Ensure removable contamination and radiation dose rate survey results comply with the limits specified in 10 CFR 71.87(i) and (j).
45. Measure the dose rate in millirems per hour at one meter from the package surface to determine the Transport Index (TI). Indicate the TI on the Radioactive Material labels applied to the package in accordance with 49 CFR 172, Subpart E.
46. Determine the appropriate Criticality Safety Index (CSI) assigned to the package contents in accordance with the CoC, and indicate the correct CSI on the Fissile Material label applied to the package per 49 CFR 172, Subpart E.
47. Apply appropriate placards to the transport vehicle in accordance with 49 CFR 172, Subpart F.
48. Complete the shipping documents and provide the carrier with instructions regarding the requirements for maintaining an exclusive use shipment.

7.1.2 Procedures for Dry Loading of Metallic Fuel

The procedures for dry loading the package with metallic fuel are as follows:

1. Perform a receipt inspection of the empty cask and trailer/ISO container, inspecting for transport damage.
2. Position the trailer in the designated cask unloading area. Set the trailer brakes and chock the wheels to prevent unintended movement. If site-specific conditions exist that require the trailer to move to allow the cask to be uprighted on its rotation trunnions, release brakes and remove the chocks when required to complete uprighting operations. If an ISO container is used, it may be removed from the trailer and secured in the unloading area.
3. Remove the roof from the ISO container and open the front and rear ISO doors. Remove roof cross-members, if installed.

   Note: Verify that the package nameplate displays the correct package identification number in accordance with the CoC.
4. Perform a Health Physics survey of the cask and adjacent surfaces of the container.

   Note: A receiving survey of the cask and transporter must be performed as soon as practicable after arrival at the site to ensure compliance with 10 CFR 20, 10 CFR 71.87(i) and 10 CFR 71.47, and to ensure timely reporting of any reportable noncompliance.
5. Remove the top and bottom impact limiters.
6. Remove the cask tie-down strap.
7. Using the lifting yoke with the guides removed, engage the lifting trunnions. Raise the cask to vertical by rotating the cask rotation sockets on the rear cask supports, moving the crane and/or trailer as required to keep the lift yoke engaged to the

trunnions and the cask engaged in the rear supports. When the cask is fully vertical, lift the cask from the supports and remove it from the trailer/container.

8. Place the cask in the dry loading stand. Disengage the lifting yoke.

9. Remove the vent and drain valve port covers. Prior to reinstallation of the port covers, carefully inspect the O-rings and, if the O-rings show any damage, replace them with approved spares. Ensure that the replacement O-rings are properly installed and seated. Visually inspect the valved quick-disconnect nipples and replace them, if necessary.

   Note: For Alternate B port covers, replace the metallic O-ring with an approved spare prior to reinstallation.

10. Remove closure lid bolts. Attach the lid lift slings to the closure lid. Remove the closure lid and set it on a support that is suitable for radiological control and for maintaining the cleanliness of the closure lid. Prior to reinstallation of the lid, carefully inspect the Teflon O-ring seal in the underside of the closure lid and, if it shows any damage, replace it. Remove the metallic O-ring and replace it with an approved spare. Ensure that the replacement O-rings are properly installed and seated. Inspect the lid bolts and replace any that are damaged.

11. Visually inspect the inner cavity for foreign material or damage. Install, or verify the presence of the proper drain tube assembly and basket, as required.

12. Install the required dry transfer system components to the top of the cask.

13. Position the shielded transfer cask system components for fuel loading, as appropriate.

14. Identify the fuel to be loaded and verify that the fuel contents comply with the content conditions and authorized quantities as specified in the CoC. Up to five sound metallic fuel rods may be placed in an unsealed canister. Damaged rods may be placed in a sealed 2.75-inch or 4.0-inch failed fuel canister (FFC). Up to 10 filters containing oxide powder from severely damaged metallic fuel rods may be placed in one FFC. The FFC(s) containing filters may be loaded with up to two FFCs containing failed fuel rods to fill the three–element basket. The FFCs must be vacuum dried and sealed as described in Section 7.1.3.

15. Load the shielded transfer cask with the selected fuel contents.

16. Place the shielded transfer cask, containing a fuel canister, onto the dry transfer system components positioned on the top of the cask.

17. Lower the fuel canister from the transfer cask into the shipping cask.

18. Repeat the loading and transfer of fuel canisters until the approved cask loading plan is completed.

19. Install the closure lid onto the cask. Visually verify that the lid is properly seated.

20. Remove the dry transfer system components from the top of the cask.

21. Install and tighten the 12 closure lid bolts to 260 ± 20 ft-lb in three passes, using the torque sequence stamped on the closure lid.

22. This step applies only if the cask contains damaged metallic fuel or severely damaged metallic fuel.

    a. Attach the vacuum pump to the cask vent valve.

    b. Evacuate the cask cavity to ≤ 10 torr (13 mbar) and maintain for a minimum of 15 minutes.

    c. Stop the vacuum pump and monitor pressure for a minimum of 10 minutes. If the pressure rise is less than 5 torr (6.5 mbar), the cask is adequately dried for shipment. If not, repeat vacuum drying and pressure rise verification.

    d. Remove the vacuum pump and backfill the cask cavity with helium to 1 atmosphere (absolute) +1, -0 psi.

    e. Remove the gas supply line.

23. Perform the helium mass spectrometer leakage rate test on the cask lid in accordance with the requirements of Section 8.1.3.1, Steps 3 through 10.

24. Install the vent and drain alternate port covers and torque the bolts to 100 ±10 inch-pounds.

25. If an alternate port cover containment O-ring seal was replaced, perform a helium leakage test on the affected port cover using a He MSLD in accordance with the requirements of Section 8.1.3.2.2.

26. If the alternate port cover containment seal was inspected and accepted for reuse, perform a gas pressure drop leakage test on the affected port cover as follows.

    a. Install a pressure test fixture to the port cover test port, including a calibrated pressure gauge with a minimum sensitivity of 0.25 psi.

    b. Pressurize the port cover seal annulus to 15 psig, +1, -0 psi.

    c. Isolate the gas supply and observe the pressure gauge for a minimum of five minutes.

    d. The acceptance criterion for the test is no measurable drop in pressure during the minimum test time. An acceptable test assures that the minimum assembly verification leakage test sensitivity is achieved.

    Note: Alternate B port covers, if used, require the satisfactory completion of a helium maintenance leakage rate test to confirm a leaktight seal condition for each loaded transport. Install the Alternate B port cover and perform the maintenance leakage rate test per the requirements of Section 8.1.3.3.2.

27. Decontaminate the cask. Survey the cask for surface contamination and radiation dose rates.

    Note: Ensure compliance with 10 CFR 71.87(i) and 10 CFR 71.47.

28. Remove lift yoke arm guides. Engage the cask lifting yoke to the lifting trunnions.
29. Lift the cask and position the cask rotation sockets in the rear rotation trunnions of the rear support structure. Carefully lower the cask to the horizontal transport orientation resting on the front saddle by moving the crane and/or the trailer as required to maintain cask engagement to the rear supports.
30. Disengage the lifting yoke from the lifting trunnions and remove it from the area.
31. Install the cask tie-down strap. Install the top and bottom impact limiters.
32. Install a TID to an attachment point on the top impact limiter.
33. Install ISO container bracing and lid or personnel barrier.
34. Complete radiation and contamination surveys of the external surfaces of the package and record the data. Ensure removable contamination and radiation dose rate survey results comply with the limits specified in 10 CFR 71.87(i) and (j).
35. Measure the dose rate in millirems per hour at one meter from the package surface to determine the Transport Index (TI). Indicate the TI on the Radioactive Material labels applied to the package in accordance with 49 CFR 172, Subpart E.
36. Determine the appropriate Criticality Safety Index (CSI) assigned to the package contents in accordance with the CoC, and indicate the correct CSI on the Fissile Material label applied to the package per 49 CFR 172, Subpart E.
37. Apply appropriate placards to the transport vehicle in accordance with 49 CFR 172, Subpart F.
38. Complete the shipping documents and provide the carrier with instructions regarding the requirements for maintaining an exclusive use shipment.

7.1.3 Procedures for Loading Metallic Fuel and Filters Containing Severely Damaged Metallic Fuel into Damaged Fuel Canisters

7.1.3.1 Small Diameter Canisters (Damaged Metallic Fuel)

1. Examine the small diameter failed fuel canister (FFC) and check it for damage.
2. Place the FFC inside the containment barrier portion of the pool. Position the FFC in the failed rod loading station.
3. After verifying the accountability records, place the designated failed fuel rod into the FFC. If the rod is broken into two or more pieces, verify that the lid thread and seal area is not fouled during rod insertion.
4. When the can is loaded, install the lid using the FFC Lid Installation Tool.
5. Using the FFC handling tool, move the loaded FFC through the containment barrier door and place the FFC horizontally into the upender.
6. Operate the hand winch to move the FFC to the vertical position.

7. Torque the FFC lid to 100 ± 10 ft-lb for the small canister.
8. Connect the nitrogen supply line to the vent valve.
9. Open nitrogen supply valve and pressurize the FFC to force out the water. Blow gas through the FFC for at least 5 minutes after the first visible bubbles appear. Remove the gas supply line.
10. Invert the FFC in the upender and install the pipe plug.
11. Re-invert the FFC in the upender.
12. Attach the vacuum pump to the FFC vent valve. Evacuate the FFC to a pressure below 25 torr (33 mbar) for a minimum of 15 minutes. Remove the vacuum pump and backfill with nitrogen.
13. Remove the FFC from the upender and place it into temporary storage.

7.1.3.2 Large Diameter Canisters (Damaged Metallic Fuel)

1. Examine the large diameter FFC and check it for damage.
2. Place the FFC inside the containment barrier portion of the pool. Position the FFC in the failed rod loading station.
3. This step is to be used when loading up to three uncanned or canned fuel rods into the large diameter canister. After verifying the accountability records, remove the ceramic filter from the top of the original failed rod can. Position the can plug with aluminum screen onto the open can. Install the plug.
4. Verify the accountability records for the fuel to be loaded.
5. Place the designated fuel into the FFC. If the rod is broken into two or more pieces, verify that the lid thread and seal area is not fouled during rod or can insertion. If more than one failed rod is to be installed, repeat steps 3 through 5.
6. After the canister is loaded with fuel, install the lid using the FFC Lid Installation Tool.
7. Using the FFC handling tool, move the loaded FFC through the containment barrier door and place the FFC horizontally into the upender.
8. Operate the hand winch to move the FFC to the vertical position.
9. Torque the FFC lid to 130 ± 10 ft-lb for the large canister.
10. Connect the nitrogen supply line to the vent valve.
11. Open the nitrogen supply valve and pressurize the FFC to force out the water. Blow gas through the FFC for at least 5 minutes after the first visible traces of bubbles appear. Remove the gas supply line.
12. Invert the FFC in the upender and install the pipe plug.
13. Reinvert the FFC in the upender.

14. Attach the vacuum pump to the FFC vent valve. Evacuate the FFC to a pressure below 25 torr (33 mbar) for a minimum of 15 minutes. Remove the vacuum pump and backfill with nitrogen.
15. Remove the FFC from the upender and place it into temporary storage.

7.1.3.3 Large Diameter Canisters (Severely Damaged Metallic Fuel)

1. Examine the large diameter FFC and check it for damage.
2. Place the FFC inside the containment barrier portion of the pool. Position the FFC in the failed rod loading station.
3. Verify the accountability records for the fuel in the filter set (up to 10 filters) to be loaded into the FFC.
4. After verifying the accountability records, load the filter set into the FFC and place aluminum wool on top of the last filter.
5. Verify that the lid thread and seal area is not fouled during insertion of the filter set.
6. After the canister is loaded with fuel, insert the lid using the FFC Lid Installation Tool.
7. Using the FFC handling tool, move the loaded FFC through the containment barrier door and place the FFC horizontally into the upender.
8. Operate the hand winch to move the FFC to the vertical position.
9. Torque the FFC lid to 130 ± 10 ft-lb for the large canister.
10. Connect the nitrogen supply line to the vent valve.
11. Open the nitrogen supply valve and pressurize the FFC to force out the water. Continue to blow gas through the FFC for at least 5 minutes after the first visible traces of bubbles appear. Remove the gas supply line.
12. Invert the FFC in the upender and install the pipe plug.
13. Re-invert the FFC in the upender.
14. Attach the vacuum pump to the FFC vent valve. Evacuate the FFC to a pressure below 25 torr (33 mbar) for a minimum of 15 minutes. Remove the vacuum pump and backfill with nitrogen.
15. Remove the FFC from the upender and place it into temporary storage.

7.1.4 Procedures for Dry Loading of DIDO, Spiral, MOATA and MTR Fuel Elements in Basket Modules into the NAC-LWT Cask

This procedure presents the steps for dry loading of fuel basket modules into the NAC-LWT cask using a transfer cask, which can contain various types of reactor fuel elements such as MTR, DIDO, spiral and plate assemblies (i.e., MOATA elements). The design, materials, use and

function of the various modular fuel basket assemblies such as MTR, DIDO and ANSTO are similar, and all can be loaded into the NAC-LWT utilizing these procedures.

The modular fuel basket assemblies all consist of three types of modules: a base module, intermediate modules, and a top module. Each basket module contains seven fuel element locations, consisting of a center cell and six peripheral cells. The top basket module interfaces with the cask lid to limit the axial movement of the basket assembly. The base module interfaces with the bottom of the cask cavity. The base and intermediate modules are provided with guide pins to provide for and maintain the proper alignment between basket modules. Each of the basket module types is provided with a guide bar assembly to provide for the proper interface of the basket assembly with the drain tube assembly.

Depending on the fuel type, the basket assembly may consist of 4, 5 or 6 modules, with a varying number of intermediate modules. For the DIDO, MOATA and spiral fuel types, the DIDO and ANSTO (the basket assembly identification for MOATA and spiral fuel types) basket assemblies consist of a top module, four intermediate modules and a base module. In the case of MTR fuel elements, the basket assembly can include 2, 3 or 4 intermediate modules, depending on the length and conditions of the fuel contents. Axial fuel spacers and plates may be used as dunnage to axially position the MTR fuel elements in the basket module to facilitate fuel unloading operations.

The fuel content condition (i.e., heat load, fissile mass, minimum cool time, etc.) limits for the various fuel types are discussed or referenced in the following paragraphs.

MTR fuel elements shall be selected and loaded in accordance with the MTR General and Preferential Loading Procedures in Section 7.1.5. The MTR plate canister, if required, shall be loaded in accordance with Section 7.1.4.1.

DIDO fuel elements shall meet the following loading conditions:

- The maximum decay heat per DIDO fuel element shall not exceed 25 W.
- The maximum decay heat load for a loaded DIDO fuel basket assembly shall not exceed 1.05 kW.
- The heat load for each DIDO fuel element shall be verified by use of cool time versus burnup (MWd/MTU) curves in Figure 7.1-8 (LEU fuel), Figure 7.1-9 (MEU fuel), and Figure 7.1-10 (HEU fuel) or by use of minimum cool time versus ^{235}U depletion curves in Figure 7.1-11 (generic for LEU, MEU and HEU fuels). Note that significantly lower uranium content for a loaded assembly compared to the design basis assembly may result in a loaded assembly calculated burnup higher than that included in Figure 7.1-8 through Figure 7.1-10. Use of Figure 7.1-11 ^{235}U depletion curves is required for fuel assemblies in this category.

- An additional requirement for fuel element loading of the top module limits the heat load to 18 W per element, unless there is a spacer bolted to the underside of the closure lid, or there is sufficient fuel element hardware to ensure that axial movement of the fuel element is limited, to ensure that the active fuel region is radially shielded by the gamma shield lead layer. A lid spacer, if required, shall be as shown on NAC Drawing No. 315-40-113.

Spiral and MOATA fuel elements shall meet the content conditions specified in the Certificate of Compliance for loading into the ANSTO fuel basket assembly. Full spiral fuel loads or mixed spiral and MOATA fuel loads are authorized with separate basket modules containing the two fuel types.

The procedures for loading the NAC-LWT cask with MTR, DIDO or ANSTO fuel baskets in a dry configuration or using a dry transfer system are as follows:

1. Perform a receipt inspection of the empty cask and trailer/ISO container, inspecting for transport damage.
2. Position the trailer in the designated cask unloading area. Set the trailer brakes and chock the wheels to prevent unintended movement. If site-specific conditions exist that require the trailer to move to allow the cask to be uprighted on its rotation trunnions, release brakes and remove the chocks when required to complete uprighting operations. If an ISO container is used, it may be removed from the trailer and secured in the unloading area.
3. Remove the personnel barrier or the roof and roof cross-members from the ISO container.

   Note: Verify that the package nameplate displays the correct package identification number in accordance with the CoC.
4. Perform a Health Physics survey of the cask and adjacent surfaces of the trailer.

   Note: A receiving survey of the cask and transporter must be performed as soon as practicable after arrival at the site to assure compliance with 10 CFR 20, 10 CFR71.87(i) and 10 CFR 71.47, and to assure timely reporting of any reportable noncompliance.
5. Remove the top and bottom impact limiters.
6. Remove the cask tie-down strap.
7. Using the lifting yoke with the guides removed, engage the lifting trunnions. Raise the cask to vertical by rotating the cask rotation sockets on the rear cask supports, moving the crane and/or trailer as required to keep the lift yoke engaged to the trunnions and the cask engaged in the rear supports. When the cask is fully vertical, lift the cask from the supports and remove it from the trailer/container.
8. Place the cask onto the dry loading station/stand. Disengage the lifting yoke and move clear.

9. Visually inspect the neutron shield tank fill, drain and level inspection plugs for signs of neutron shield fluid leakage. If leakage is detected or suspected, verify shield tank fluid level and correct, as required.

10. Remove the vent and drain valve port covers. Prior to reinstallation of the port covers, carefully inspect the O-ring seals and, if the O-rings show any damage, replace them with approved spares. Ensure that the replacement O-rings are properly installed and seated. Visually inspect the valved quick-disconnect nipples and replace them, if necessary.

    Note: For Alternate B port covers, replace the metallic O-ring with an approved spare prior to reinstallation.

11. Remove closure lid bolts. Attach the lid lift slings to the closure lid. Remove the closure lid and set it on a support that is suitable for radiological control and for maintaining the cleanliness of the closure lid. Prior to reinstallation of the lid, carefully inspect the Teflon O-ring seal in the underside of the closure lid and, if it shows any damage, replace it. Remove the metallic O-ring and replace it with an approved spare. Ensure that the replacement O-rings are properly installed and seated. Inspect the lid bolts and replace any that are damaged.

12. Visually inspect the inner cavity for foreign material or damage. Install or verify presence of a proper drain tube including drain tube alignment ring, as required.

13. Install the required dry transfer system components on the top of the cask.

14. Position the shielded transfer cask system components for fuel loading, as appropriate.

15. Identify the fuel to be loaded into each fuel basket module. Fuel elements loaded into each basket and/or module shall comply with the approved content conditions specified in Condition 5.(b)(1) and 5.(b)(2) of CoC No. 9225. Specific guidance on fuel selection, use of loading diagrams and preferential loading procedures is provided in Section 7.1.5. Perform an independent verification of the loading diagrams and fuel loading operations per Section 7.1.5.3.

    Note: If a basket module is to be loaded with a LEU MTR fuel element having ^{235}U content >470 g (>22 g ^{235}U per plate), cell black spacers, as shown on Drawing 315-40-085, shall be installed in basket module cell positions 1, 2 and 3 to prevent inadvertent loading of more than four LEU MTR fuel elements.

    Note: For the loading of HEU MTR fuel elements having ^{235}U content >380 g, a minimum of 2.0 cm of nonfuel hardware and /or spacer plates shall be provided at both ends of the fuel element to meet criticality control analysis requirements.

16. Load the shielded transfer cask and basket module with the selected fuel contents.

17. Place the shielded transfer cask containing a loaded fuel basket module onto the dry transfer system components positioned on the top of the cask.

18. Lower the loaded basket module from the transfer cask into the shipping cask.

19. Repeat the loading and transfer of loaded basket modules until the approved cask loading plan is completed.

20. Install the closure lid onto the cask using the dry transfer system. Visually verify that the lid is properly seated.
21. Remove the dry transfer system components from the top of the cask.
22. Install and tighten the 12 closure bolts to 260 ± 20 ft-lb in three passes, using the sequence stamped on the lid.
23. Connect a gas supply line to the vent valve and the drain line to the drain valve.
24. Open the air, nitrogen or helium gas supply valve and pressurize the cask cavity (< 30 psig) to force any residual water out the drain line. Continue to supply pressurized gas to the cask for a minimum of five minutes after the last residual free water discharges from the drain. Remove the drain and gas supply lines and attach a vacuum drying system (VDS) to the vent.
25. Evacuate the cask cavity to less than or equal to 10 torr (13 mbar) and continue vacuum pumping for a minimum of 15 minutes.
26. At the end of the vacuum pumping period, isolate the cask cavity from the vacuum pump and stop the vacuum pump. Monitor the cask cavity pressure for a minimum of 10 minutes. If the pressure rise is less than 5 torr (6.7 mbar), the cavity is verified as dry of free water. If pressure rise is >5 torr (6.7 mbar), repeat vacuum drying until the dryness verification results are satisfactory.
27. Backfill the cask cavity with helium to 0 psig (1 atmosphere, absolute), +1, -0 psi and disconnect the VDS from the vent valve.
28. Perform a helium leakage test of the closure lid containment O-ring using a Helium Mass Spectrometer Leak Detector (He MSLD) in accordance with the procedural requirements of Section 8.1.3.1, Steps 3 through 10.
29. Install the vent and drain alternate port covers and torque the bolts to 100 ±10 inch-pounds.
30. If an alternate port cover containment O-ring seal was replaced, perform a helium leakage test on the affected port cover using a He MSLD in accordance with the requirements of 8.1.3.2.2.
31. If the alternate port cover containment seal was inspected and accepted for reuse, perform a gas pressure drop leakage test on the affected port cover as follows.
    a. Install a pressure test fixture to the port cover test port including a calibrated pressure gauge with a minimum sensitivity of 0.25 psi.
    b. Pressurize the port cover seal annulus to 15 psig, +1, -0 psi.
    c. Isolate the gas supply and observe the pressure gauge for a minimum of five minutes.
    d. The acceptance criterion for the test is no measurable drop in pressure during the minimum test time. An acceptable test assures that the minimum assembly verification leakage test sensitivity is achieved.

Note: Alternate B port covers, if used, require the satisfactory completion of a helium maintenance leakage rate test to confirm a leaktight seal condition for each loaded transport. Install the Alternate B port cover and perform the maintenance leakage rate test per the requirements of Section 8.1.3.3.2.

32. Decontaminate the cask surfaces. Survey the cask for surface contamination and radiation dose rates.

    Note: Ensure compliance with 10 CFR 71.87(i) and 10 CFR 71.47

33. Remove lift yoke arm guides. Engage the cask lifting yoke to the lifting trunnions.
34. Lift the cask and position the cask rotation sockets in the rear rotation trunnions of the rear support structure. Carefully lower the cask to the horizontal transport orientation resting on the front saddle by moving the crane and/or the trailer as required to maintain cask engagement to the rear supports.
35. Disengage the lifting yoke from the lifting trunnions and remove it from the area.
36. Install the cask tie-down strap. Install the top and bottom impact limiters.
37. Install a TID to an attachment point on the top impact limiter.
38. Install ISO container bracing and lid, or personnel barrier.
39. Complete radiation and contamination surveys of the external surfaces of the package and record the data. Ensure removable contamination and radiation dose rate survey results comply with the limits specified in 10 CFR 71.87(i) and (j).
40. Measure the dose rate in millirems per hour at one meter from the package surface to determine the Transport Index (TI). Indicate the TI on the Radioactive Material labels applied to the package in accordance with 49 CFR 172, Subpart E.
41. Determine the appropriate Criticality Safety Index (CSI) assigned to the package contents in accordance with the CoC, and indicate the correct CSI on the Fissile Material label applied to the package per 49 CFR 172, Subpart E.
42. Apply appropriate placards to the transport vehicle in accordance with 49 CFR 172, Subpart F.
43. Complete the shipping documents and provide the carrier with instructions regarding the requirements for maintaining an exclusive use shipment.

7.1.4.1 Procedure for Loading MTR Fuel Plates into MTR Plate Canister

1. Examine the MTR plate canister and inspect for damage. Visually verify that one end of the canister is installed, the six associated bolts are installed and the other end is removed.
2. Place the can in the loading fixture.
3. Load the fuel plates into the canister. Verify that the number of fuel plates in the canister is no more than the maximum number of plates in an intact MTR fuel element of its type.

4. Install the lid and lid bolts.

7.1.5 MTR General and Preferential Loading Procedures

Up to 42 LEU, MEU, and HEU MTR fuel elements may be loaded into the NAC-LWT MTR Fuel Basket, i.e., 7 fuel elements per basket module × 6 basket modules per fuel basket, except for LEU MTR fuel elements with greater than 470 g ^{235}U, which are limited to 4 elements per basket module as detailed in the following paragraphs. Each MTR basket module has 7 fuel element positions. The MTR basket module loading diagram presented in Figure 7.1-1 has a center position (Position 1), two exterior positions (Positions 2 and 3) that are in line with the center position, and four exterior positions (Positions 4, 5, 6, and 7) that are adjacent to the center row positions. The basket module's fuel element locations are specifically identified to ensure loading of each location with the appropriate fuel element. Ensuring MTR fuel loadings are performed in strict accordance with the procedures presented herein will ensure that the MTR fuel content conditions of the Certificate of Compliance (CoC) are met and that the analyses presented in this SAR are bounding.

MTR fuel elements are selected for loading into specific fuel element locations based on the decay heat of each individual fuel element at the time of loading. Figure 7.1-2 through Figure 7.1-5 are provided to assist in determining the acceptability of a MTR fuel element for loading in a 30 W uniform loading pattern depending on enrichment (i.e., LEU, MEU or HEU) or ^{235}U content (i.e. 380 or 460 grams). For determining the acceptability of higher heat load HEU fuel elements, Figure 7.1-6 and Figure 7.1-7 are provided for 380 and 460 grams of ^{235}U, respectively. The use of the fuel element cool time versus fuel burnup figures are described in Section 7.1.5.4. LEU MTR fuel elements with a ^{235}U content greater than 470 grams, but not exceeding 640 grams, are restricted to baskets containing a maximum of four fuel elements (or an equivalent number of fuel plates per opening). The four element per basket module is in effect even if only one LEU MTR assembly exceeds 470 g per element. Specific basket locations and restrictions for the high load LEU elements are described in Section 7.1.5.1.

The procedural steps and sequence to ensure the MTR fuel loading and content condition limits are met are: 1) determine ^{235}U content weight per element; 2) determine fuel element decay heat load per Section 7.1.5.4; 3) determine basket module loading position for each element and overall basket loading pattern; and 4) individual basket module loading and assembly of the fuel basket in the NAC-LWT. Each of these steps is independently verified.

Attention to the overall cask loading pattern allows the decay heat load of the cask to be maintained as uniform, as is practical and within CoC total heat load limits. Loading diagrams for each individual module and the complete cask assembly shall be developed and used during

the basket module and cask loading operations. After the decay heat load of each of the MTR fuel elements to be loaded and transported is calculated or determined and verified, the loading and content considerations of Sections 7.1.5.1 through 7.1.5.3 shall be met or complied with to establish the final acceptable loading pattern and sequence.

7.1.5.1 General Loading Requirements

1. The maximum decay heat load per MTR fuel basket module shall not exceed 210 W and the maximum decay heat load per cask (package) shall not exceed 1.26 kW. A MTR fuel element with a decay heat greater than 120 W shall not be loaded.
2. LEU, MEU and HEU MTR fuel elements with decay heat not exceeding 30 W per element may be loaded in any basket module fuel element location in any combination.
3. HEU MTR fuel elements with decay heats exceeding 30 W shall be preferentially loaded in a basket module in decreasing decay heat order according to the loading diagram in Figure 7.1-1, with the highest heat load element loaded in fuel location one. Fuel elements with heat loads of up to 120 W shall only be loaded in the center fuel element location of any MTR fuel basket module. The decay heat of the fuel element in either of the two fuel element locations (i.e., number 2 or 3), in line with the center fuel element location of a MTR fuel basket module, shall not exceed 70 W.
4. LEU MTR fuel elements (or canistered fuel plates) with a ^{235}U content greater than 470 g, and not exceeding 640 g, shall only be loaded into basket positions 4, 5, 6 and 7 shown in Figure 7.1-1. In order to ensure that baskets containing the high fissile mass LEU MTR elements (>470 g ^{235}U) will not be loaded with fuel elements (or fuel plates) in basket opening positions 1, 2 and 3, a cell block spacer shall be installed in each of these three basket openings. The cell block spacer, as shown on Drawing 315-40-085, is of sufficient height and diameter to ensure that LEU MTR fuel elements are prevented from being placed in these openings. The capacity limitation of a maximum of four MTR fuel elements per module is in effect even if a single LEU MTR fuel elements (or canistered fuel plates) having >470 g ^{235}U is to be loaded.
5. An MTR plate canister may be loaded into any fuel basket module fuel element location. The contents of each plate canister shall be limited to the number of fuel plates, dimensions and masses of an equivalent intact MTR fuel element.
6. MTR fuel elements with corrosion and/or mechanically damaged cladding may be loaded, provided that the total surface area of through-clad corrosion and/or mechanical damage does not exceed 2,775 cm^2 per package.

7.1.5.2 Determination of Basket Module Loading Pattern

1. Perform an evaluation of the full inventory of fuel elements to be loaded into the NAC-LWT cask(s) and develop an overall loading plan that minimizes overall dose rates to minimize general population dose and operator dose. The loading of LEU MTR fuel elements with greater than 470 g ^{235}U shall be governed by the loading restrictions in item 4 of Section 7.1.5.1, and cell block spacers shall be placed in basket loading

positions 1, 2 and 3 to prevent inadvertent loading of more than four high fissile mass LEU MTR elements.

2. Select up to seven MTR fuel elements to be loaded in a basket module meeting the general loading requirements of Section 7.1.5.1. Identify if spacers or spacer plates are required to properly position the MTR elements axially in the basket module.
3. Rank the fuel elements in order of decreasing decay heat load from 1 to 7. (i.e., the assembly with the highest decay heat is designated number 1.)
4. Generate loading diagrams for each basket module based on Figure 7.1-1, by placing the numbered assemblies in the matching numbered basket module positions, except that fuel elements ranked 4,5,6 or 7 may be loaded in any of the outer (i.e., 4-7) basket module positions.
5. Repeat steps 1 through 4 for all of the basket modules to be loaded.
6. Independently verify the basket module loading diagrams.
7. The loading diagrams shall be used to direct the loading of the basket modules per Section 7.1.5.3.

Once the basket module loading charts are complete, they are used to direct the loading of the basket modules.

7.1.5.3 Basket Loading Procedure

1. Locate the MTR fuel element to be loaded into the basket module per the loading diagram prepared for that module type (i.e., base, intermediate or top).
2. Independently verify the element identification.
3. Load the element into the predetermined fuel basket module fuel element location using the loading diagram. Ensure spacers are installed in positions 1, 2 and 3 of any basket module containing a high fissile mass LEU MTR element.
4. Independently verify that the fuel element and spacer loading in the basket module complies with the loading diagram.
5. Repeat steps 1 through 4 until all identified fuel elements have been loaded into basket modules in compliance with the loading diagrams.

7.1.5.4 Estimating Assembly Decay Heat

When the decay heat of a fuel element is not known, the assembly burnup (MWd/MTU) and cooling time (years) can be used to define the allowable basket module positions using Figure 7.1-2 through Figure 7.1-7, depending on fuel enrichment (i.e., LEU, MEU or HEU) or ^{235}U content.

HEU MTR fuel elements may be loaded with heat loads greater than 30 W. HEU elements exceeding 30 W shall be preferentially loaded, and Figure 7.1-6 and Figure 7.1-7 identify the appropriate cooling times and burnup limits for 120 W, 70 W and 20 W HEU elements, having a

^{235}U mass of up to 380 grams and a ^{235}U mass of up to 460 grams, respectively. The following steps are used to develop the appropriate loading patterns.

1. Locate the point on Figure 7.1-6 or Figure 7.1-7 for the fuel element burnup and cooling time, and ^{235}U content.
2. If the located point is above the 20 W line, there are no restrictions on fuel element placement in the basket module.
3. If the located point is between the 20 W and 70 W lines, the element is loaded as a 70 W element.
4. If the located point is between the 70 W and 120 W lines, the element is loaded as a 120 W element.
5. If the located point is below the 120 W line, the element shall not be loaded in the NAC-LWT cask.
6. The maximum total decay heat load for a preferentially loaded basket module shall not exceed 210 W and 1.26 kW for a loaded NAC-LWT cask.
7. Each shipper shall ensure that the Certificate of Compliance maximum decay heat load limits of 210 W per basket module and 1.26 kW per cask are not exceeded.

Figure 7.1-1 MTR Fuel Basket Module Loading Pattern (Top View)

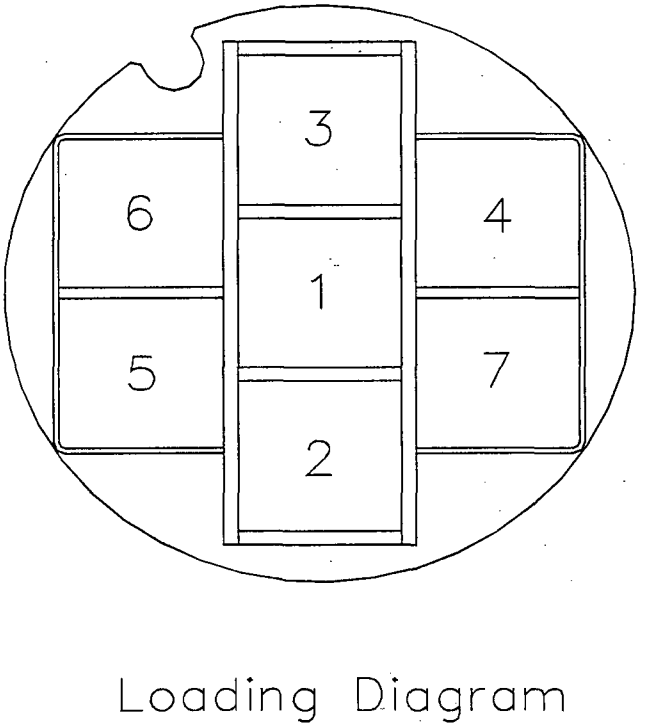

Figure 7.1-2 LEU MTR Fuel Basket Loading Guidelines for 30 W Uniform Loading

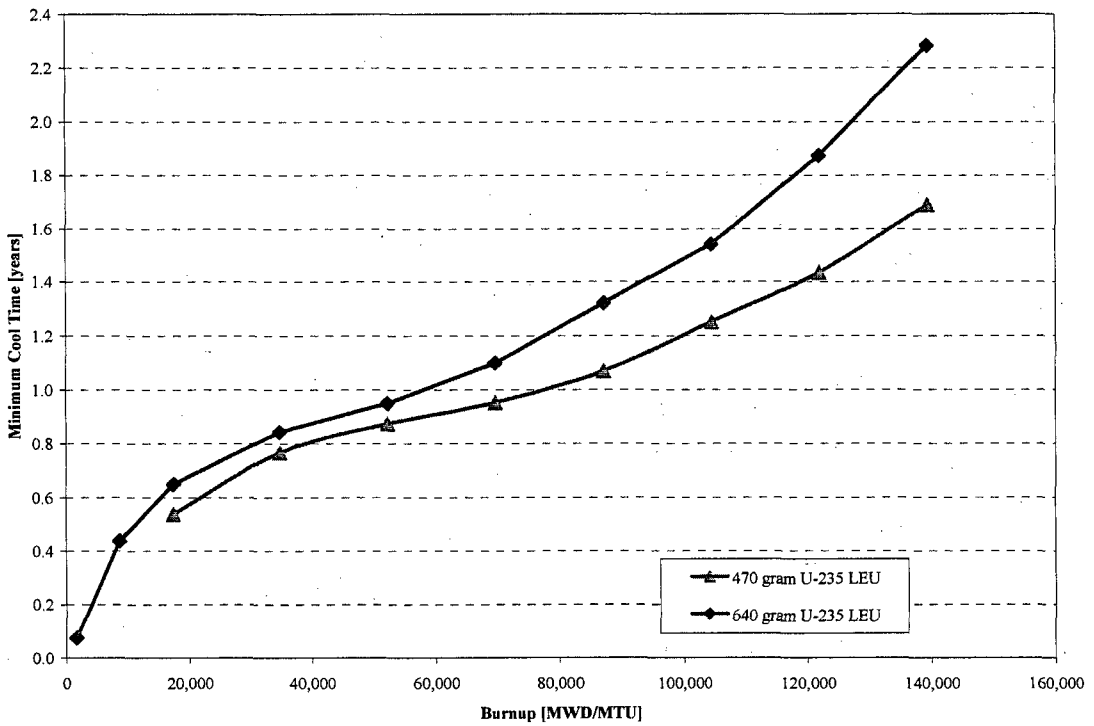

Figure 7.1-3 MEU MTR Fuel Basket Loading Guidelines for 30 W Uniform Loading

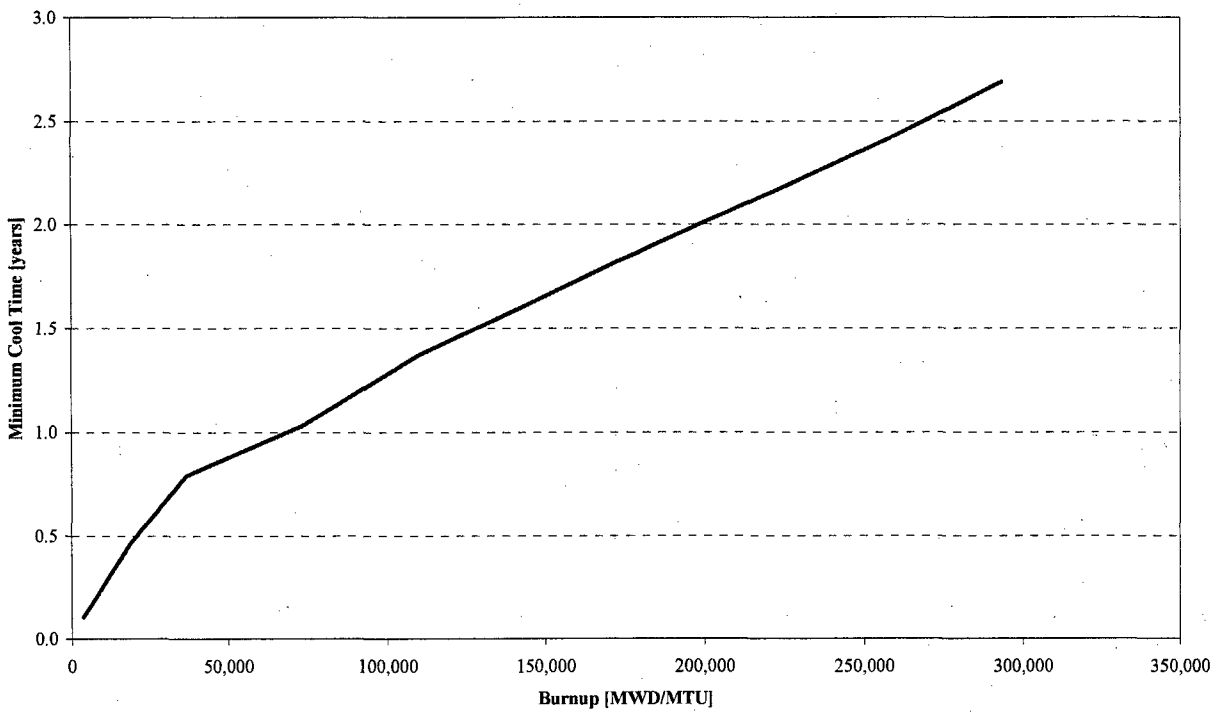

Figure 7.1-4 HEU MTR Fuel Basket Loading Guidelines for 30 W Uniform Loading – Maximum 380 grams ^{235}U

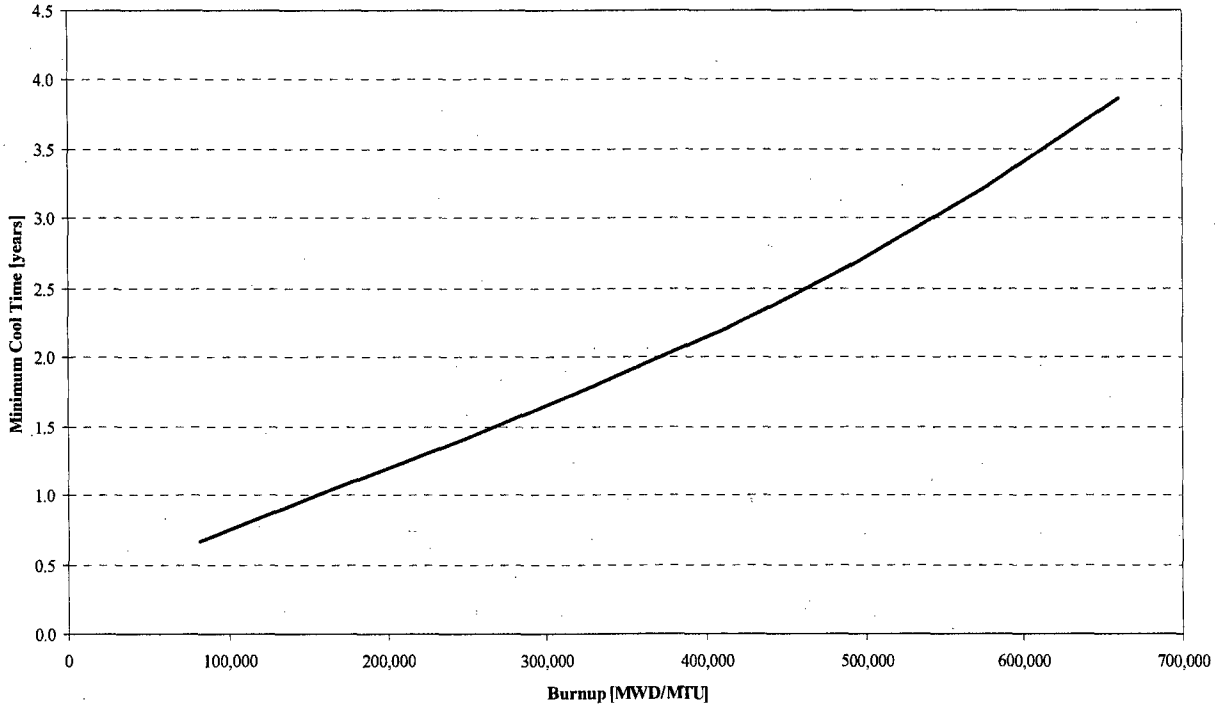

Figure 7.1-5 HEU MTR Fuel Basket Loading Guidelines for 30 W Uniform Loading – Maximum 460 grams ^{235}U

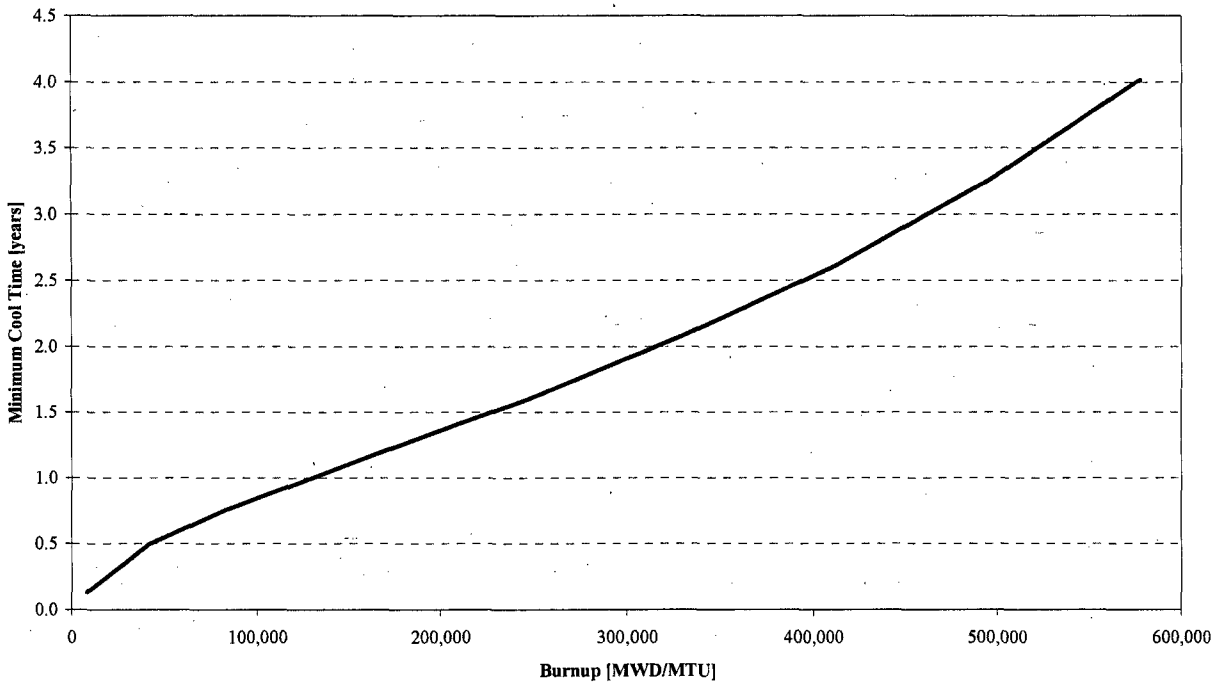

Figure 7.1-6 HEU MTR Fuel Basket Loading Guidelines for Preferential Loading – Maximum 380 grams ^{235}U

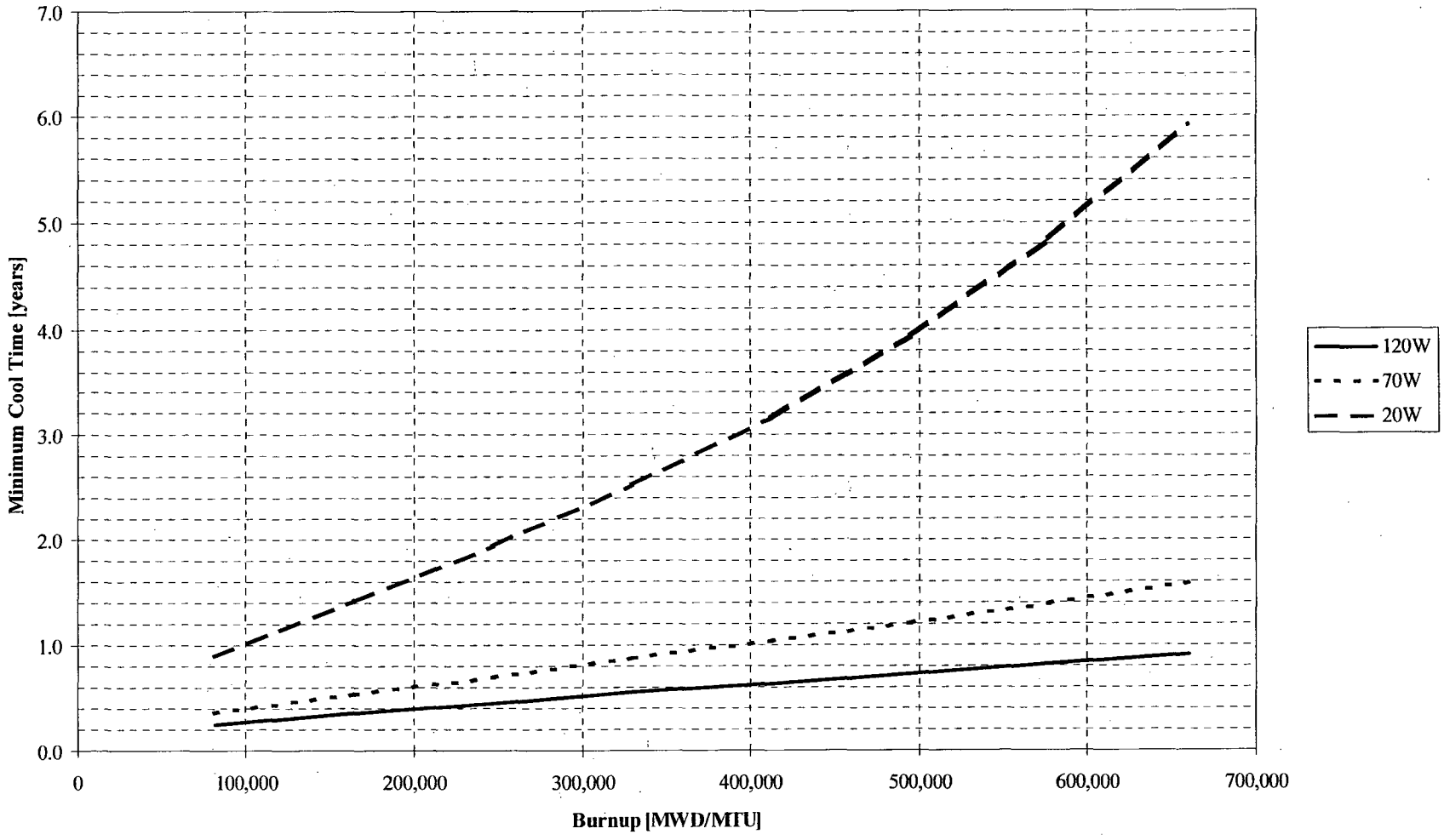

Figure 7.1-7 HEU MTR Fuel Basket Loading Guidelines for Preferential Loading – Maximum 460 grams ^{235}U

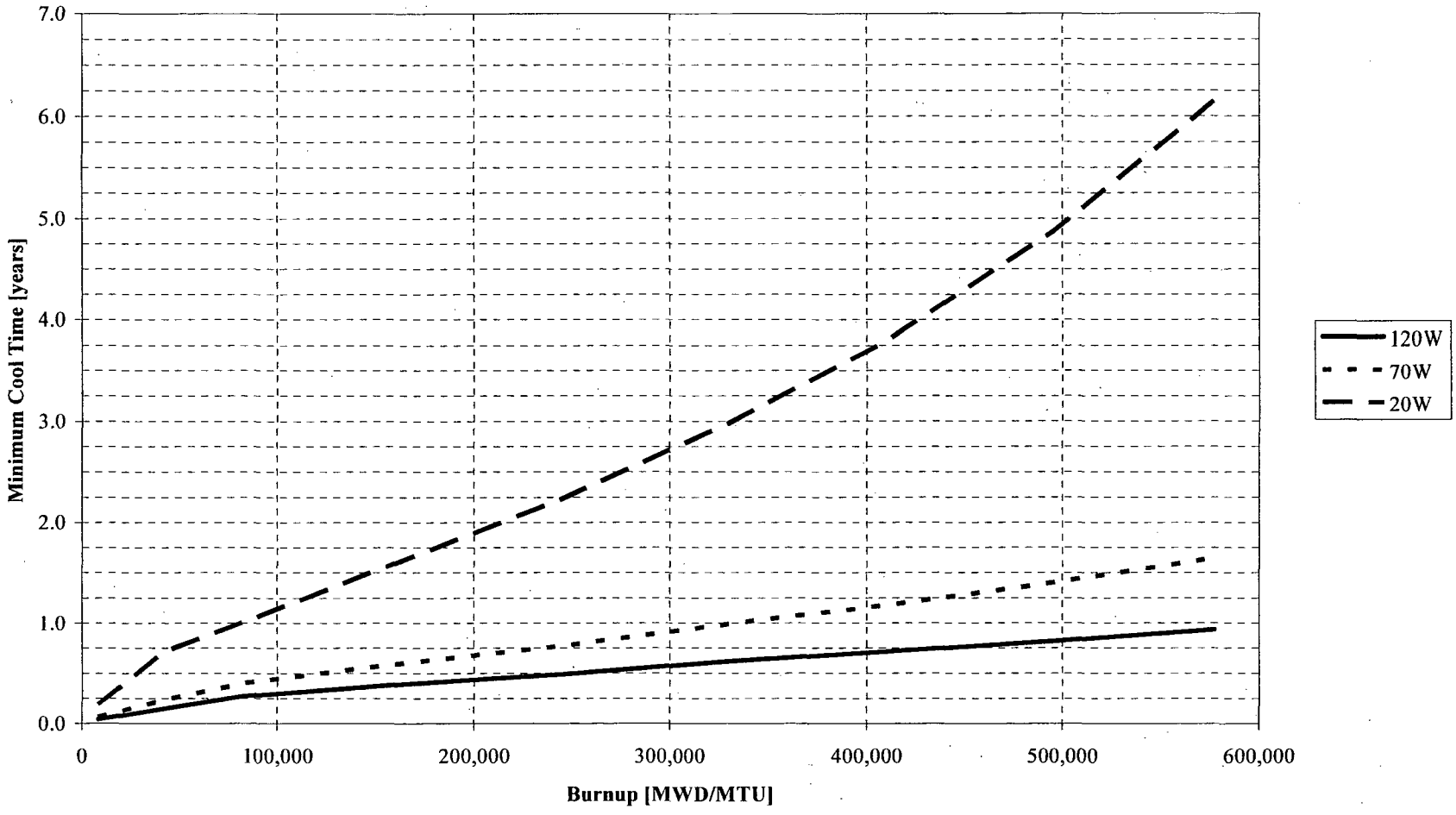

Figure 7.1-8 DIDO LEU Cooling Time vs. Fuel Burnup Basket Module Loading Guidelines for Uniform Loading

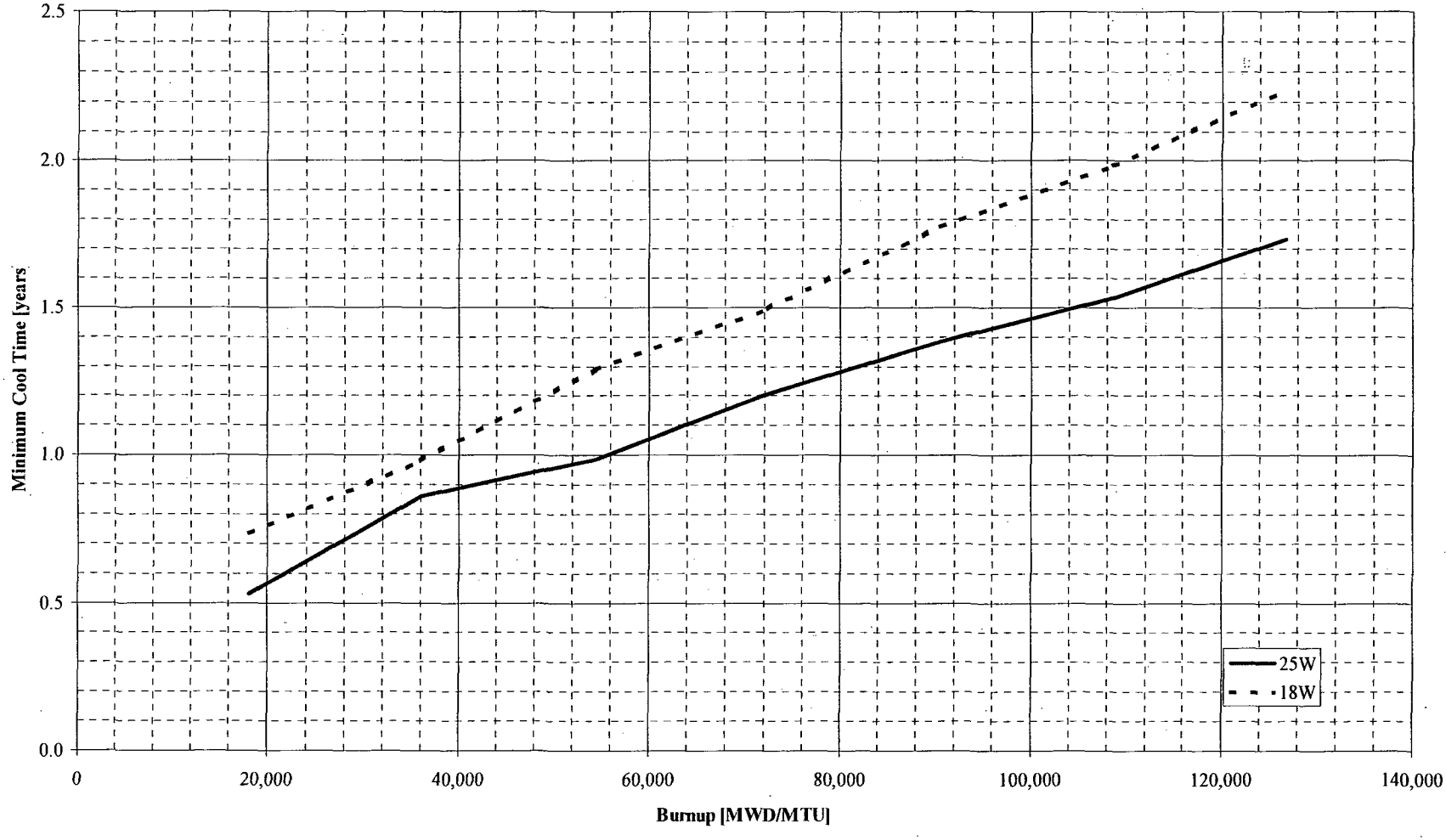

Figure 7.1-9 DIDO MEU Cooling Time vs. Fuel Burnup Basket Module Loading Guidelines for Uniform Loading

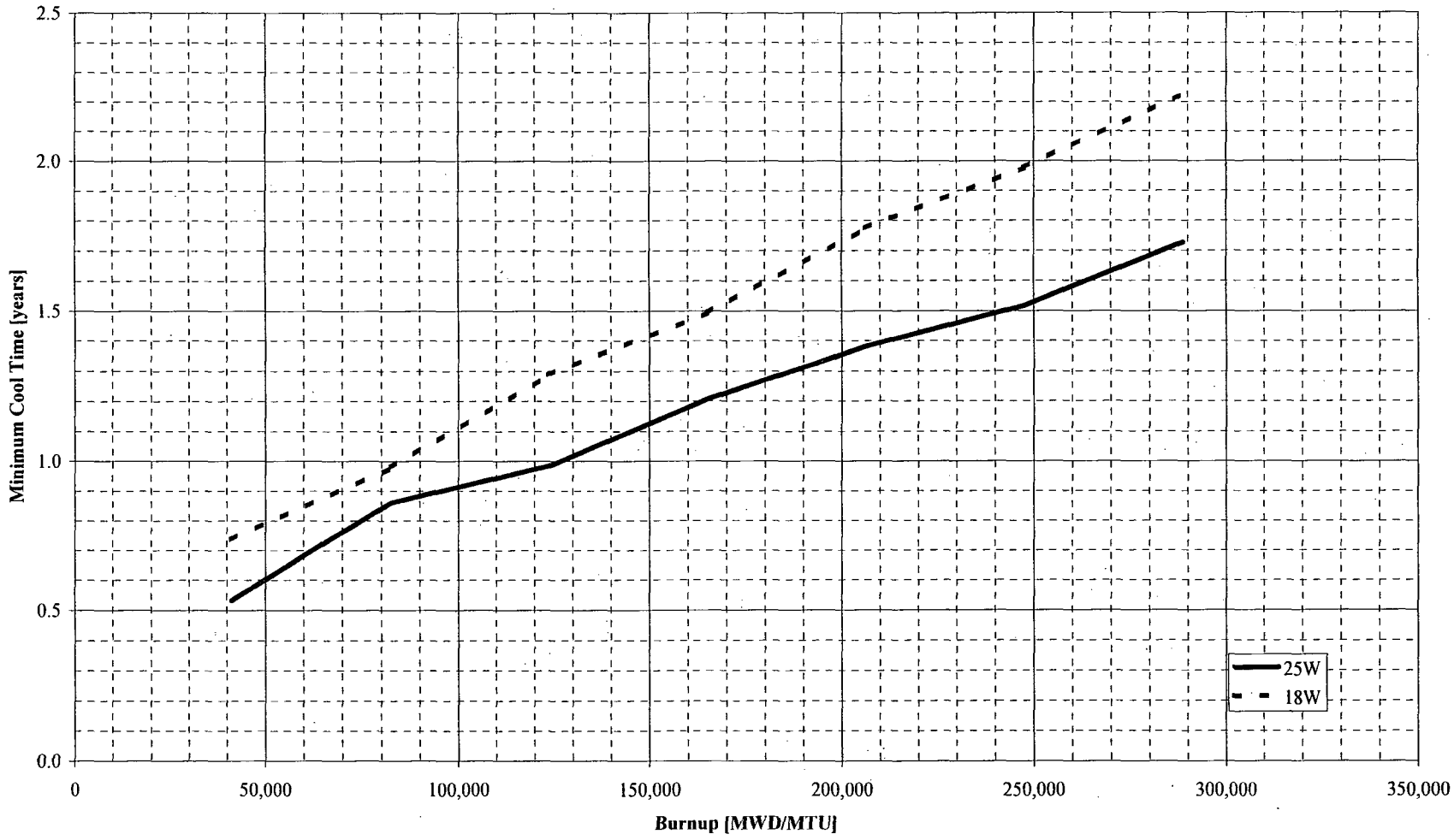

Figure 7.1-10 DIDO HEU Cooling Time vs. Fuel Burnup Basket Module Loading Guidelines for Uniform Loading

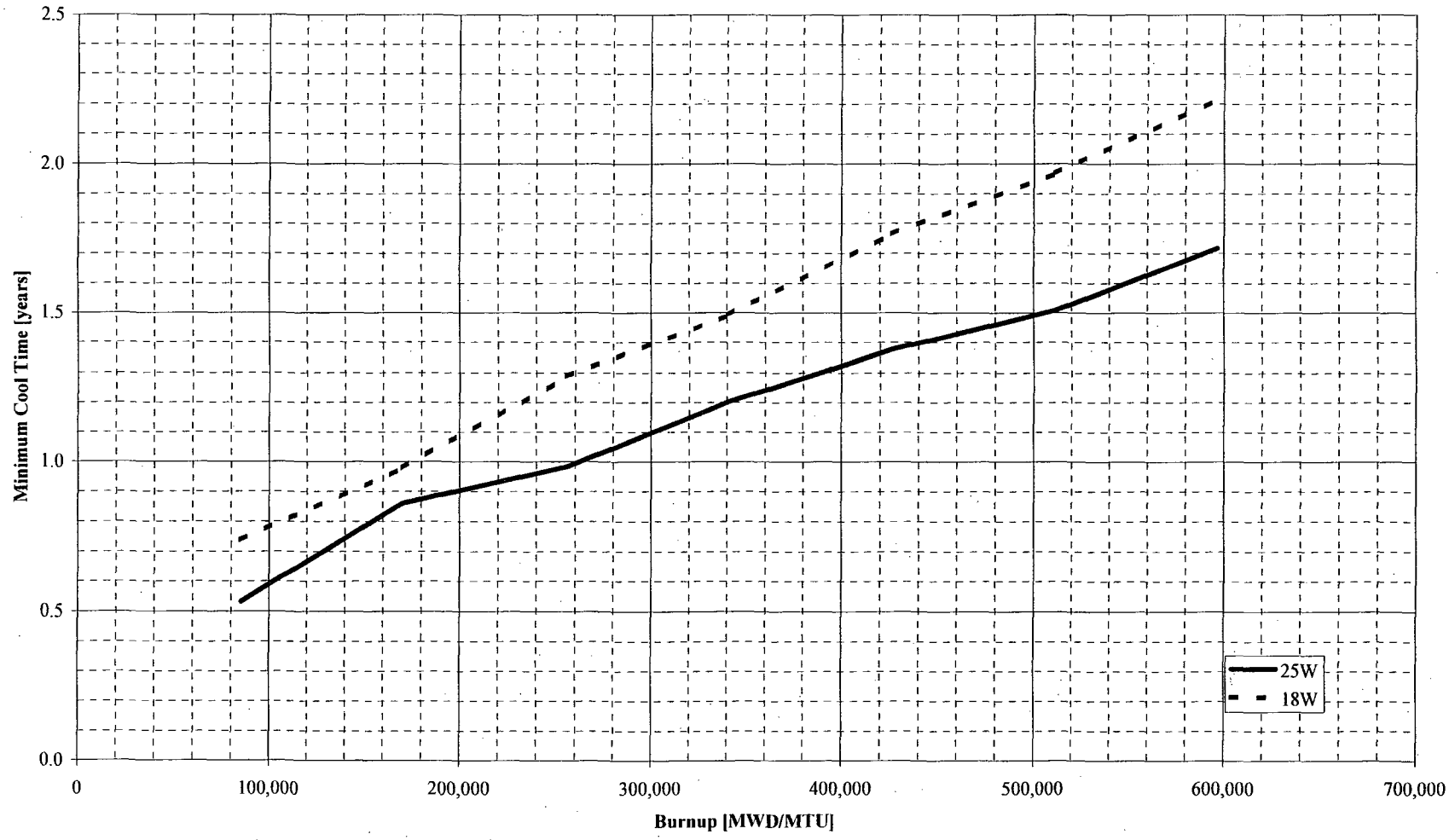

Figure 7.1-11 Bounding DIDO Element Minimum Cool Time vs. wt % ^{235}U Depletion

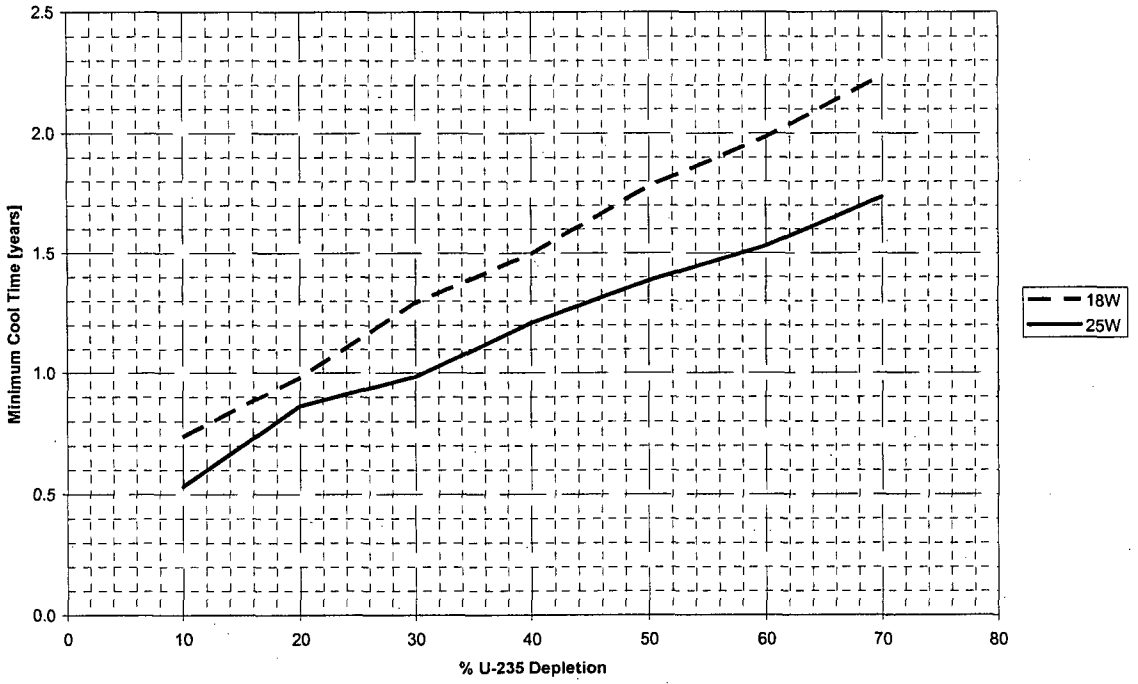

7.1.6 Procedure for Dry Loading of TRIGA Fuel Basket Modules and GA IFM Modules into the NAC-LWT Cask

This procedure presents the steps for dry loading, using a transfer cask, of the nonpoisoned or poisoned TRIGA fuel basket modules into the NAC-LWT. For transport, five TRIGA fuel basket modules, consisting of a top module, a base module, and three intermediate modules must be loaded into the NAC-LWT. An alternative loading option is available for the poisoned TRIGA basket modules. This configuration, Configuration 2, consists of 1 base module and 4 intermediate modules. A spacer attached to the underside of the NAC-LWT lid is used with Configuration 2. Each basket module consists of seven cells, a center cell, and six peripheral cells. The center cell of the nonpoisoned basket design is blocked and cannot be loaded. Each unblocked cell may contain up to four TRIGA fuel elements, or up to 16 TRIGA fuel cluster rods within a fuel rod insert placed into the cell prior to loading. Each nonpoisoned basket module may contain up to 24 TRIGA fuel elements, for a total of 120 elements, or up to 96 TRIGA fuel cluster rods, for a total of 480 rods per basket assembly. Each poisoned basket module may contain up to 28 TRIGA fuel elements, for a total of 140 elements, or up to 112 TRIGA fuel cluster rods, for a total of 560 rods per basket assembly. The maximum decay heat load of any TRIGA fuel element is 7.5 watts, while the maximum decay heat load of a TRIGA fuel cluster rod is 1.875 watts. An alternative loading option is available for the General Atomics (GA) Irradiated Fuel Material (IFM) Fuel Handling Units (FHU). This configuration consists of one GA IFM top module and one GA IFM spacer. The GA IFM top module, based on the TRIGA basket design, has two canister storage tubes that hold the GA IFM FHU.

TRIGA fuel elements may be transported directly in the basket module cell, or in a sealed damaged fuel can (DFC). TRIGA fuel cluster rods may be transported within the fuel rod insert in a basket cell, or a sealed DFC. The sealed DFCs fit in a module cell. The sealed DFC holds up to two equivalent TRIGA elements as damaged fuel or fuel debris, or up to six equivalent TRIGA fuel cluster rods as damaged rods or fuel debris. Damaged TRIGA fuel and fuel debris contained in sealed DFCs.

When loading TRIGA fuel elements directly into the basket cells of a TRIGA basket module, the fuel elements may be loaded with either 4 elements per cell, or one element per cell, without shoring. If a basket cell is loaded with 2 or 3 intact elements, dummy rods will be inserted as necessary to fill the remaining space in the cell.

Damaged TRIGA fuel elements and cluster rods and fuel debris are required to be loaded into sealed DFCs. The sealed DFCs are provided in two lengths. The short sealed DFC may be used in the base or top basket module. The long sealed DFC may be used in only the top module. The

sealed DFCs are vacuum dried prior to loading into a TRIGA fuel basket (see sealed DFC loading procedure in Section 7.1.7).

There are two separate GA IFM FHU designs. One FHU is designed to hold research reactor fuel and the other is designed to hold High-Temperature Gas-Cooled Reactor fuel pellets. Each FHU consists of a sealed inner canister within a sealed outer canister. Each FHU contains irradiated fuel materials as described in Chapter 1. When loading the GA IFM FHUs, each individual sealed FHU will be loaded separately into a single GA IFM basket. This single basket containing two GA IFM FHUs and a spacer will comprise the entire cask load. Loading of the GA IFM basket into the NAC-LWT cask will utilize the TRIGA dry configuration loading procedure that is described in the following paragraphs.

TRIGA fuel elements that can be loaded into the cask are limited to a maximum decay heat of 7.5 watts per element, as discussed in Section 1.2.3. The decay heat load of the element must be calculated, and verified to be equal to or less than 7.5 watts per element prior to loading. TRIGA fuel cluster rods that can be loaded into the cask are limited to a maximum decay heat of 1.875 watts per element, as discussed in Section 1.2.3 (by reference to Table 5.1.1). The decay heat load of the fuel cluster rod must be calculated, and verified to be equal to or less than 1.875 watts per element prior to loading.

The procedure for loading the package with TRIGA fuel in a dry configuration is as follows:

1. Perform a receipt inspection of the empty cask and trailer/ISO container, inspecting for transport damage.
2. Position the trailer in the designated cask unloading area. Set the trailer brakes and chock the wheels to prevent unintended movement. If site-specific conditions exist that require the trailer to move to allow the cask to be uprighted on its rotation trunnions, release brakes and remove the chocks when required to complete uprighting operations. If an ISO container is used, it may be removed from the trailer and secured in the unloading area.
3. Remove the personnel barrier or the roof and roof cross-members from the ISO container.

   Note: Verify that the package nameplate displays the correct package identification number in accordance with the CoC.
4. Perform a Health Physics survey of the cask and adjacent surfaces of the trailer.

   Note: A receiving survey of the cask and transporter must be performed as soon as practicable after arrival at the site to assure compliance with 10 CFR 20, 10 CFR 71.87(i) and 10 CFR 71.47, and to assure timely reporting of any reportable noncompliance.
5. Remove the top and bottom impact limiters.

6. Remove the cask tie-down strap.

7. Using the lifting yoke with the guides removed, engage the lifting trunnions. Raise the cask to vertical by rotating the cask rotation sockets on the rear cask supports, moving the crane and/or trailer as required to keep the lift yoke engaged to the trunnions and the cask engaged in the rear supports. When the cask is fully vertical, lift the cask from the supports and remove it from the trailer/container.

8. Place the cask onto the dry loading station. Disengage the lifting yoke and move clear.

9. Visually inspect the neutron shield tank fill, drain and level inspection plugs for signs of neutron shield fluid leakage. If leakage is detected or suspected, verify shield tank fluid level and correct, as required.

10. Remove the vent and drain valve port covers. Prior to reinstallation of the port covers, carefully inspect the O-rings and, if the O-rings show any damage, replace them with approved spares. Ensure that the replacement O-rings are properly installed and seated. Visually inspect the valve quick-disconnect nipples and replace them, if necessary.

    Note: For Alternate B port covers, replace the metallic O-ring with an approved spare prior to reinstallation.

11. Remove closure lid bolts. Attach the lid lift slings to the closure lid. Remove the closure lid and set it on a support that is suitable for radiological control and for maintaining the cleanliness of the closure lid. Prior to reinstallation of the lid, carefully inspect the Teflon O-ring seal in the underside of the closure lid and, if it shows any damage, replace it. Remove the metallic O-ring and replace it with an approved spare. Ensure that the replacement O-rings are properly installed and seated. Inspect the lid bolts and replace any that are damaged.

12. Visually inspect the inner cavity for foreign material or damage. Install, or verify the presence of the proper drain tube and drain alignment ring.

13. Install the required dry transfer system components on the top of the cask.

14. Position the shielded transfer cask system components for fuel loading, as appropriate.

15. Identify the TRIGA fuel basket modules to be loaded. Modular baskets consisting of one base unit, three intermediate units, and one top unit, may be loaded into the cask cavity. The base unit must be the first unit loaded and the top unit must be the last unit loaded. The intermediate modules may be loaded in any of the other loading operations. If the poisoned basket Configuration 2 is used, ensure that the TRIGA spacer is bolted and torqued to 40 ft-lbs to the underside of the NAC-LWT lid. If TRIGA fuel cluster rods are to be transported, ensure that fuel rod inserts are placed into each cell location that will contain fuel cluster rods. For the GA IFM basket load, install the GA IFM spacer, shown on NAC drawing 315-40-123, prior to inserting the loaded GA IFM top module.

Notes:

a. When utilizing nonpoisoned TRIGA baskets, visually verify that the center blocking plate is welded in place on each basket module.

b. When utilizing poisoned TRIGA baskets, visually inspect each cell of each basket module for foreign material or damage and verify the presence of the neutron poison material (borated stainless steel plates) as shown on NAC Drawings 315-40-080, -081, and -082.

c. When utilizing the GA IFM top module, follow the TRIGA loading procedure below, noting that this is a single basket load.

16. Identify the TRIGA fuel contents to be loaded and verify that the fuel contents comply with the content, heat load and quantity conditions as specified in the CoC.
17. Load a TRIGA fuel basket module into the shielded transfer cask.
18. Place the shielded transfer cask containing the loaded basket module onto the dry transfer system components positioned on the top of the cask.
19. Lower the fuel basket from the shielded transfer cask into the shipping cask.
20. Repeat the loading and transfer of loaded basket modules until the approved cask loading plan is completed.
21. Install the closure lid onto the cask. Visually verify that the lid is properly seated.
22. Remove the dry transfer system components from the top of the cask.
23. Install and tighten the 12 closure bolts to 260 ± 20 ft-lbs in three passes, using the torque sequence stamped on the closure lid.
24. Connect a gas supply line to the vent valve and the drain line to the drain valve.
25. Open the air, nitrogen or helium gas supply valve and pressurize the cask cavity (< 30 psig) to force any residual water out the drain line. Continue to supply pressurized gas to the cask for a minimum of five minutes after the last residual free water discharges from the drain. Remove the drain and gas supply lines and attach a vacuum drying system (VDS) to the vent.
26. Evacuate the cask cavity to less than or equal to 10 torr (13 mbar) and continue vacuum pumping for a minimum of 15 minutes.
27. At the end of the vacuum pumping period, isolate the cask cavity from the vacuum pump and stop the vacuum pump. Monitor the cask cavity pressure for a minimum of ten minutes. If the pressure rise is less than 5 torr (6.7 mbar), the cavity is verified as dry of free water. If pressure rise is >5 torr (6.7 mbar), repeat vacuum drying until the dryness verification results are satisfactory.
28. Backfill the cask cavity with helium to 0 psig (1 atmosphere, absolute), +1, -0 psi and disconnect the VDS from the vent valve.

29. Perform a helium leakage test of the closure lid containment O-ring using a Helium Mass Spectrometer Leak Detector (He MSLD) in accordance with the procedural requirements of Section 8.1.3.1, Steps 3 through 10.

30. Install the vent and drain alternate port covers and torque the bolts to 100 ±10 inch-pounds.

31. If an alternate port cover containment O-ring seal was replaced, perform a helium leakage test on the affected port cover using a He MSLD in accordance with the requirements of 8.1.3.2.2.

32. If the alternate port cover containment seal was inspected and accepted for reuse, perform a gas pressure drop leakage test on the affected port cover as follows.

    a. Install a pressure test fixture to the port cover test port including a calibrated pressure gauge with a minimum sensitivity of 0.25 psi.

    b. Pressurize the port cover seal annulus to 15 psig, +1, -0 psi.

    c. Isolate the gas supply and observe the pressure gauge for a minimum of five minutes.

    d. The acceptance criterion for the test is no measurable drop in pressure during the minimum test time. An acceptable test assures that the minimum assembly verification leakage test sensitivity is achieved.

    Note: Alternate B port covers, if used, shall have a helium maintenance leakage rate test performed to confirm a leaktight containment closure. Install the Alternate B port cover and perform the maintenance leakage rate test per the requirements of Section 8.1.3.3.2.

33. Decontaminate the cask surfaces. Survey the cask for surface contamination and radiation dose rates.

    Note: Ensure compliance with 10 CFR 71.87(i) and 10 CFR 71.47.

34. Engage the cask lifting yoke to the lifting trunnions.

35. Lift the cask and position the cask rotation sockets in the rear rotation trunnions of the rear support structure. Carefully lower the cask to the horizontal transport orientation resting on the front saddle by moving the crane and/or the trailer as required to maintain cask engagement to the rear supports.

36. Disengage the lifting yoke from the lifting trunnions and remove it from the area. Install the cask tie-down strap. Install the top and bottom impact limiters. Install a TID to an attachment point on the top impact limiter.

37. Install ISO container bracing and lid, or personnel barrier.

38. Complete radiation and contamination surveys of the external surfaces of the package and record the data. Ensure removable contamination and radiation dose rate survey results comply with the limits specified in 10 CFR 71.87(i) and (j).

39. Measure the dose rate in millirems per hour at one meter from the package surface to determine the Transport Index (TI). Indicate the TI on the Radioactive Material labels applied to the package in accordance with 49 CFR 172, Subpart E.

40. Determine the appropriate Criticality Safety Index (CSI) assigned to the package contents in accordance with the CoC, and indicate the correct CSI on the Fissile Material label applied to the package per 49 CFR 172, Subpart E.

41. Apply appropriate placards to the transport vehicle in accordance with 49 CFR 172, Subpart F.

42. Complete the shipping documents and provide the carrier with instructions regarding the requirements for maintaining an exclusive use shipment.

7.1.7 Procedure for Loading TRIGA Damaged Fuel or Fuel Debris into a TRIGA Sealed Damaged Fuel Can (DFC)

1. Examine the sealed damaged fuel can (DFC) body and inspect for damage. Verify that the lid sealing surface is clean and free of defects. Visually verify that the drain plug seal is installed and the drain plug is partially threaded into the drain plug adapter to allow for draining.

2. Lower the DFC into the pool and position it for fuel loading.

3. Load the damaged TRIGA fuel cluster rods or fuel debris into the DFC. Verify that no more than the equivalent of 2 fuel elements, or 6 fuel cluster rods, as damaged fuel or fuel debris are loaded into the sealed DFC as specified in the CoC. Visually verify that there is no debris in the lid sealing surface and thread areas.

4. Examine the DFC lid and inspect for damage. Visually verify that the sealing surface is clean and free of defects. Lubricate the lid bolts, install the lid seal and verify that the lid valve is in the open position and the valve lock set screw is retracted.

5. Attach the testing hose to the lid test connection and ensure that the fitting is properly seated.

6. Install the lid and torque the lid bolts to 150 ± 10 inch-pound.

   Note: Torque any two diametrically opposed bolts first, then torque the remaining two bolts. Complete the torque sequence by verifying the torque of all four bolts in a clockwise direction.

7. Pressurize the sealed DFC with air or helium to 5-15 psig to remove the water. Continue the purge for at least 5 minutes after bubbles appear from the base of the DFC.

8. Access and torque the DFC drain plug to 50 ± 10 inch-pound.

9. Evacuate the DFC to a pressure below 10 torr (13 mbar) and continue vacuum pumping for 10 minutes.

10. Stop and isolate the vacuum pump and monitor the DFC vacuum pressure for a minimum of 10 minutes. If the pressure rise is <5 torr (6.7 mbar) in 10 minutes, the DFC is verified as dry of free water. If the pressure rise is >5 torr (6.7 mbar) in 10 minutes or less, the DFC is not considered dry of free water. Repeat vacuum drying and pressure rise testing until the dryness verification results are satisfactory.
11. Backfill the DFC with helium to a pressure of 1 atmosphere (0 psig), +1, -0 psi.
12. Shut and lock the lid diaphragm valve. The DFC is now sealed, dried and backfilled.
13. Disconnect the testing hose from the lid test connection.
14. The sealed DFC is now ready for loading into a TRIGA basket module.

7.1.8 Procedure for Wet Loading of PWR/BWR Fuel Rods or TPBARs into the PWR/BWR Transport Canister

For the shipment of PWR and BWR fuel rods and nonfuel-bearing components (e.g., PWR guide tubes or BWR water rods), the PWR/BWR transport canister has three configurations: sealed canister, screened canister, and free flow canister. All three canister configurations may be used to contain either intact or damaged fuel rods, or a combination of both damaged and intact fuel rods. The loaded transport canisters are loaded into the NAC-LWT cask containing a LWT PWR basket assembly with an appropriate bottom weldment spacer. For transport canisters containing any damaged fuel rod contents, a can and an insert spacer are required to be installed and bolted to the underside of the closure lid to limit the axial movement of the canister. The use of the can and insert spacer requires the use of the PWR basket assembly fitted with the Alternate B spacer. Transport canisters containing intact rods may be placed in any of the three types of PWR basket assemblies. For the transport of a mixed loading of PWR or BWR fuel rods with nonfuel-bearing components, a modified 5×5 insert with 21 fuel rod locations and a larger tube position for the larger diameter nonfuel-bearing component (up to a nominal diameter of 1.3 inches) is required to be used with the PWR/BWR transport canister.

For the shipment of TPBARs, only the screened or free flow PWR/BWR Rod Transport Canister containing the 5×5 rod insert may be used.

Upon completion of loading the transport canister, the canister and the insert spacer are loaded, either together or individually, into the basket assembly in a manner similar to loading a PWR assembly.

1. If the transport canister is to be shipped in a sealed configuration, verify the five drain plugs are installed and torqued to 50 ± 2 foot-pound. If the transport canister is to be shipped in the free flow configuration, verify the five drain plugs are not installed. If the transport canister is to be shipped in the screened configuration, verify the screened plugs are installed and torqued to 50 ± 2 foot-pound in the bottom of the canister.

2. Lower the transport canister (and insert) into the fuel pool for loading.
3. Load the spent fuel rods into the transport canister in accordance with site-specific procedures. Separate failed fuel rod capsules may be used to contain either intact or damaged fuel rods within the canister. The capsules are intended to limit dispersal of radioactive material to the canister internals. Visually upon completion of loading, verify that there is no debris on the lid sealing surface and threaded areas.
4. Using the appropriate lid (sealed, screened or free-flow), examine and inspect for damage. Visually verify that the sealing surface is clean and free of defects. Lubricate the lid bolts.
5. Install the lid and torque the lid bolts to 35 ± 5 inch-pound.

   Note: Torque any two diametrically opposed bolts first, then torque the remaining six bolts. Complete the torque sequence by verifying the torque of all eight bolts in a clockwise direction.
6. If the transport canister is being shipped in either the screened or free-flow configuration, it is now ready for shipment. To ship PWR and BWR rods and nonfuel-bearing components, the transport canister shall be loaded into the NAC-LWT cask in accordance with Section 7.1.1, Procedures for Wet Loading of LWR Fuel Assemblies and Canistered LWR Fuel Rods. To ship TPBARs, the transport canister shall be loaded in accordance with Section 7.1.9, Procedure for Wet Loading of TPBAR Consolidation Canister or PWR/BWR Rod Transport Canister into the NAC-LWT Cask. If the transport canister is being shipped in the sealed configuration, complete steps 7-14 of this section.
7. Connect vent and drain lines to the respective quick-disconnect fittings on the sealed transport canister lid. The drain hose discharge should be directed to the plant drain system for radiological wastewater or another appropriate collection point.
8. Pressurize and purge the transport canister using helium. (Caution do not exceed 25 psig. while dewatering the transport canister.) Secure the purge once no fluid is observed exiting the discharge for at least 10 minutes.
9. Connect the vent line to a suitable vacuum pump. Maintain connection of drain line to the can, but isolate the line to allow vacuum drying of the sealed failed fuel can.
10. Evacuate the can to a pressure below 10 torr (13 mbar) and continue vacuum pumping for 10 minutes.
11. Stop and isolate the vacuum pump and monitor the cask cavity vacuum pressure for a minimum of 10 minutes. If the pressure rise is less than 5 torr (6.7 mbar), the cavity is verified as dry of free water. If the pressure rise is >5 torr (6.7 mbar), repeat vacuum drying until the dryness verification results are satisfactory.
12. Backfill the transport canister cavity with helium to 1 atmosphere (absolute), +1, -0 psi.
13. Disconnect the vent and drain lines from the transport canister.
14. The sealed transport canister is now ready for shipment and may be loaded into the NAC-LWT cask in accordance with Section 7.1.1.

7.1.9 Procedure for Wet Loading of TPBAR Consolidation Canister or PWR/BWR Rod Transport Canister into the NAC-LWT Cask

This section describes the procedures for loading the NAC-LWT with a TPBAR consolidation canister or with a screened or free flow PWR/BWR Rod Transport Canister. The consolidation canister can contain up to 300 TPBARs, two of which may be prefailed. Dunnage (i.e., spacer grids, stainless steel tubes, etc.) may be used in consolidation canisters containing fewer than 300 TPBARs. The total weight and volume of the contents (i.e., dunnage and reduced number of TPBARs) must be less than, or equal to, the weight and volume of the full load of 300 TPBARs.

The PWR/BWR Rod Transport Canister may contain up to 25 TPBARs.

Appropriate radiological controls and procedures addressing tritium shall be utilized by the licensee, including appropriate personnel monitoring for tritium exposure.

NAC-LWT casks to be used to transport the TPBAR consolidation canisters shall be configured as shown on Drawing No. 315-40-128, including Alternate B port covers. NAC-LWT casks to be used to transport a PWR/BWR Rod Transport Canister shall be configured as shown on Drawing No. 315-40-104, Assembly 95, including Alternate B port covers.

1. Perform a receiving survey of the empty cask and inspect for damage. Verify, by cask serial number, that the cask is approved for TPBAR shipment.
2. Position a trailer in the designated cask unloading area. Set the trailer brakes and chock the wheels to prevent unintended movement. If site-specific conditions exist that require the trailer to move to allow the cask to be uprighted on its rotation trunnions, release brakes and remove the chocks when required to complete uprighting operations. If an ISO is used, it may be removed from the trailer and secured in the unloading area.
3. Remove the roof from the ISO container and open the front and rear ISO doors. Remove roof cross-members, if installed.

   Note: Verify that the package nameplate displays the package identification number, USA/9225/B(M)-96, as required by the CoC for TPBAR contents.
4. Perform a Health Physics survey of the cask and adjacent surfaces of the trailer.

   Note: A receiving survey of the cask and transporter must be performed as soon as practical after arrival at the site to assure compliance with 10 CFR 71.87(i) and 10 CFR 71.47, and to assure timely reporting of any reportable noncompliance.
5. Remove the top and bottom impact limiters.
6. Remove the cask tie-down strap.
7. Using the lifting yoke with the guides removed, engage the lifting trunnions. Raise the cask to vertical by rotating the cask rotation sockets on the rear cask supports, moving the crane and/or trailer as required to keep the lift yoke engaged to the

trunnions and the cask engaged in the rear supports. When the cask is fully vertical, lift the cask from the supports and remove it from the trailer/container.

8. Place the cask in the decontamination pit or other designated area. Disengage the lifting yoke. Clean cask surfaces of road dirt as required for entry into the spent fuel pool.

9. Visually inspect the neutron shield tank fill, drain and level inspection plugs for signs of neutron shield fluid leakage. If leakage is detected, verify shield tank fluid level and correct, as required.

10. Remove the Alternate B vent and drain valve port covers. Prior to reinstallation of the port covers, replace the metallic O-ring seal with an approved spare and inspect the Viton® O-ring seal for each port cover. If the Viton® O-ring shows any damage, replace it. Ensure that the replacement O-rings are properly installed and seated. Store the port covers to protect the seal surfaces. Visually inspect the valved quick-disconnect nipples and replace them, if necessary.

11. Remove closure lid bolts. Attach the lid lift slings to the closure lid. Remove the closure lid and set it on a support that is suitable for radiological control and for maintaining the cleanliness of the closure lid. Prior to reinstallation of the lid, carefully inspect the Teflon O-ring seal in the underside of the closure lid. If the O-ring shows any damage, replace it. Remove the metallic O-ring and replace it with an approved spare. Ensure that the replacement O-rings are properly installed and seated. Inspect the lid bolts and replace any that are damaged. Ensure that the TPBAR spacer is installed on the bottom of the cask lid for consolidation canister transports and not damaged when the lid is set down.

12. Visually inspect the inner cavity for foreign material or damage. Install or verify the presence of the standard drain tube and the TPBAR basket assembly (Drawing No. 315-40-10, Assembly 96 or Assembly 95) for loading of the consolidation canister; or the standard drain tube, TPBAR basket assembly (Drawing No. 315-40-10, Assembly 95), and the PWR Insert (Drawing No. 315-40-105, Assembly 99) for the loading of the PWR/BWR Rod Transport Canister containing TPBARs.

    Note: The PWR insert may be installed during the placement of the loaded PWR/BWR Rod Transport Canister into the NAC-LWT cask.

13 Fill the cask cavity with clean water. Install lift yoke arm guides and remote actuation components on the cask lifting yoke.

14. Engage the cask lifting yoke with the cask lifting trunnions and pick up the cask. Carefully lower the cask to the bottom of the cask loading area while spraying the cask down with clean water.

15. Disengage the lifting yoke from the cask and remove the yoke from the pool.

16. Identify the TPBAR consolidation canister or the PWR/BWR Rod Transport Canister containing TPBARs to be loaded.

17. Pick up the consolidation canister or the PWR/BWR Rod Transport Canister using the required grapple system.

18. Position the container over the cask and then carefully lower it into the cask to avoid damage to the cask sealing surfaces. Orient the consolidation canister bail so that it is aligned with the drain tube location. Confirm that the container is fully seated, then release and raise the grapple to the full up position.

19. Position the cask lifting yoke over the cask closure lid. Attach the slings to the closure lid and cask lifting yoke. Lower the yoke over the cask.

20. Position the closure lid over the cask and slowly lower it into place. For the consolidation canister, ensure the bail is properly aligned to the TPBAR spacer on the bottom of the lid. Use the cask and lid match marks as guides to properly align the lid. Visually confirm that the closure lid is seated.

21. Lower the cask handling yoke to slack the closure lid cables. Engage the lift yoke to the lifting trunnions and begin lifting.

    Note: Visually verify the yoke engagement before lifting the cask.

22. Raise the cask until the lid is slightly above the surface of the pool. At the option of the licensee/user, a number of closure lid bolts (4 to 12) may be installed hand tight.

23. Raise the cask clear of the pool, rinsing the yoke and cask with clean water.

24. Transfer the cask to the decontamination pit or other work area. Remove the yoke and lid lift slings.

25. Install and tighten the 12 closure lid bolts to 260 ± 20 ft-lb in three passes, using the torque sequence stamped on the closure lid.

26. At the option of the licensee/user, a 25 to 50 gallon clean water flush of the cask cavity may be performed by connecting a valved clean water line to the drain valve and a valved drain line to the vent valve. After the cavity flushing is completed, if performed, disconnect the water supply and drain lines.

27. Connect a gas supply line to the vent valve and the drain line to the drain valve.

28. Open the air, nitrogen or helium gas supply valve and pressurize the cask cavity (<30 psig) to force out the water. Continue to supply pressurized gas to the cask for a minimum of five minutes after the last residual free water discharges from the drain line. Remove the drain and gas supply lines and attach a vacuum drying system (VDS) to the cask vent valve.

29. Evacuate the cask cavity to a vacuum pressure of less than 10 torr (13 mbar) and continue vacuum pumping for a minimum of 15 minutes.

30. At the end of the vacuum pumping period, isolate the cask cavity from the vacuum pump and stop the pump. Monitor the cask cavity pressure for a minimum of ten (10) minutes. If the pressure rise is less than 5 torr (6.7 mbar), the cavity is verified as dry of free water. If the pressure rise >5 torr (6.7 mbar), repeat vacuum drying until the dryness verification results are satisfactory.

31. Backfill the cask cavity with helium to 0 psig (1 atmosphere, absolute), +1, -0 psi. Disconnect the VDS.

32. Perform the helium leakage test of the closure lid containment O-ring using a Helium Mass Spectrometer Leak Detector (He MSLD) in accordance with the requirements of Section 8.1.3.1, Steps 3 through 10.
33. Install and helium leakage test the Alternate B vent and drain port covers to leaktight criteria in accordance with Section 8.1.3.3.2.
34. Decontaminate the cask. Survey the cask for surface contamination and radiation dose rates.

    Note: Ensure compliance with 10 CFR 71.87(i) and 10 CFR 71.47.
35. Remove lift yoke arm guides. Engage the cask lifting yoke to the lifting trunnions.
36. Lift the cask and position the cask rotation sockets in the rear rotation trunnions of the rear support structure. Carefully lower the cask to the horizontal transport orientation resting on the front saddle by moving the crane and/or trailer, as required, to maintain cask engagement to the rear supports.
37. Disengage the cask lifting yoke from the cask lifting trunnions and remove it from the area.
38. Install the cask tie-down strap. Install the top and bottom impact limiters.
39. Install a TID to an attachment point on the top impact limiter.
40. Install roof cross-members, close ISO container doors, and replace ISO container roof.
41. Complete radiation and contamination surveys of the external surfaces of the package and record the data. Ensure removable contamination and radiation dose rate survey results comply with the limits specified in 10 CFR 71.87(i) and (j).
42. Measure the dose rate in millirems per hour at one meter from the package surface to determine the Transport Index (TI). Indicate the TI on the Radioactive Material labels applied to the package in accordance with 49 CFR 172, Subpart E.
43. Determine the appropriate Criticality Safety Index (CSI) assigned to the package contents in accordance with the CoC, and indicate the correct CSI on the Fissile Material label applied to the package per 49 CFR 172, Subpart E.
44. Apply appropriate placards to the transport vehicle in accordance with 49 CFR 172, Subpart F.
45. Complete the shipping documents and provide the carrier with instructions regarding the requirements for maintaining an exclusive use shipment.

7.1.10 Procedure for the Dry Loading of PULSTAR Fuel Into the NAC-LWT Cask

This section describes the procedures for loading the NAC-LWT cask with intact PULSTAR fuel assemblies, intact PULSTAR fuel rods in fuel rod inserts, and intact or damaged PULSTAR fuel assemblies, fuel rods, fuel debris, and nonfuel components of PULSTAR fuel assemblies in

either sealed or screened PULSTAR cans. Up to 28 PULSTAR fuel assemblies, rod inserts, and sealed or screened cans can be loaded in the 28 MTR (four module × seven cells/module) basket assembly. The 28 MTR basket assembly consists of a base module, two intermediate modules, and a top module.

Damaged PULSTAR fuel assemblies, damaged fuel rods, fuel debris, and nonfuel components of fuel assemblies are required to be loaded in either a sealed failed fuel or screened PULSTAR can. Intact PULSTAR fuel rods may be loaded into either one of the cans at the option of the licensee. The PULSTAR cans are limited to being loaded in any cell in either the top or the base module. The top and base basket modules can also contain intact PULSTAR fuel assemblies and fuel rod inserts containing intact PULSTAR fuel rods.

The NAC-LWT cask will be loaded dry, utilizing a transfer cask for loading each of the four basket modules. The basket modules will be preloaded with the PULSTAR fuel contents. The damaged fuel cans will be preloaded, closed, drained and dried, if applicable, prior to loading in either the top or base basket module. The PULSTAR cans shall be loaded and prepared for transport in accordance with the applicable steps of Section 7.1.7.

The NAC-LWT dry PULSTAR fuel loading and preparation for transport procedures are as follows.

1. Perform a receipt inspection of the empty cask and trailer/ISO container, inspecting for transport damage.
2. Position the trailer in the designated cask unloading area. Set the trailer brakes and chock the wheels to prevent unintended movement. If site-specific conditions exist that require the trailer to move to allow the cask to be uprighted on its rotation trunnions, release brakes and remove the chocks when required to complete uprighting operations. If an ISO container is used, it may be removed from the trailer and secured in the unloading area.
3. Remove the lid/top of the ISO container and remove any bracing.

   Note: Verify that the package nameplate displays the correct package identification number in accordance with the CoC.
4. Perform a Health Physics survey of the cask and adjacent surfaces of the trailer.

   Note: A receiving survey of the cask and transporter must be performed as soon as practical after arrival at the site to assure compliance with 10 CFR 71.87(i) and 10 CFR 71.47, and to assure timely reporting of any reportable noncompliance.
5. Remove the top and bottom impact limiters.
6. Remove the cask tie-down strap.

7. Using the lifting yoke with the guides removed, engage the lifting trunnions. Raise the cask to vertical by rotating the cask rotation sockets on the rear cask supports, moving the crane and/or trailer as required to keep the lift yoke engaged to the trunnions and the cask engaged in the rear supports. When the cask is fully vertical, lift the cask from the supports and remove it from the trailer/container.

8. Place the cask into the dry loading station.

9. Disengage the lift yoke.

10. Visually inspect the neutron shield tank fill, drain and level inspection plugs for signs of neutron shield fluid leakage. If leakage is detected or suspected, verify shield tank fluid level and correct, as required.

11. Remove the vent and drain port covers. Prior to reinstallation of the port covers, carefully inspect the port cover O-ring seals and, if the O-rings show any damage, replace them with approved spares. Ensure that the replacement O-rings are properly installed and seated. Visually inspect the vent and drain quick-disconnect nipples and replace them, if necessary.

    Note: For Alternate B port covers, replace the metallic O-ring with an approved spare prior to reinstallation.

12. Remove closure lid bolts. Attach the lid lift slings to the closure lid. Remove the closure lid and set it on a support that is suitable for radiological control and for maintaining the cleanliness of the closure lid. Prior to reinstallation of the lid, carefully inspect the Teflon O-ring seal in the underside of the closure lid. If the O-ring shows any damage, replace it. Remove the metallic O-ring and replace it with an approved spare. Ensure that the replacement O-rings are properly installed and seated. Inspect the lid bolts and replace any that are damaged.

13. Visually inspect the cask cavity for foreign material or damage. Clean as necessary. Install or verify the presence of a correct drain tube assembly including alignment ring.

14. Install the required dry transfer system components to the top of the cask.

15. Position the shielded transfer cask components for basket module loading, as appropriate.

16. Identify the PULSTAR fuel assemblies, fuel rod holders, and fuel cans to be loaded, and verify that the PULSTAR fuel contents comply with the authorized content, heat load and quantity conditions of the CoC. Four basket modules (e.g., one base module, two intermediate modules, and a top module) constitute the 28 MTR basket assembly. Spacers will be used as provided to position the PULSTAR fuel contents, as required.

17. Each module is capable of containing up to seven intact fuel assemblies, fuel rod inserts or a PULSTAR fuel can. Fuel cans are restricted to being loaded into the top and base modules, where the cans may be loaded with intact fuel assemblies or fuel rod holders without loading preference. There are no limitations on loading location for intact fuel assemblies or fuel rod holders in any of the four basket modules.

The base module is loaded into the cask first, followed by the two intermediate modules and the top module is loaded last.

18. Load the shielded transfer cask with the loaded base basket module.
19. Place the shielded transfer cask containing the base module unit onto the dry transfer system components positioned on the top of the cask.
20. Lower the fuel basket from the transfer cask into the NAC-LWT cask cavity.
21. Repeat the loading and transfer of loaded basket modules until the approved cask loading plan is completed.
22. Install the closure lid onto the cask using the dry transfer system. Visually verify that the lid is properly seated.
23. Remove the dry transfer cask system components from the top of the cask.
24. Install and torque the 12 closure lid bolts to 260 ± 20 ft-lb in three passes using the torquing sequence stamped on the lid.
25. Connect a gas supply line to the vent valve and a drain line to the drain valve.
26. Open the nitrogen or helium gas supply valve and pressurize the cask cavity (< 30 psig) to force any residual water out the drain line. Continue to supply pressurized gas to the cask for a minimum of five minutes after the last residual free water discharges form the drain. Remove the drain and gas supply lines and attach a vacuum drying system (VDS) to the vent.
27. Evacuate the cask cavity to less than or equal to 10 torr (13 mbar) and continue vacuum pumping for a minimum of 15 minutes.
28. At the end of the vacuum pumping period, isolate the cask cavity from the vacuum pump and stop the vacuum pump, and monitor the cask cavity pressure for a minimum of 10 minutes. If the pressure rise is less than 5 torr (6.7 torr), the cavity is verified dry of free water. If the pressure rise is >5 torr (6.7 mbar), continue vacuum drying until the dryness verification is completed satisfactorily.
29. Backfill the cask cavity with helium to 0 psig (1 atmosphere, absolute), +1, -0 psi. Disconnect the VDS from the vent valve.
30. Perform the helium leakage test of the closure lid containment O-ring using a Helium Mass Spectrometer Leak Detector (He MSLD) in accordance with the requirements of Section 8.1.3.1, Steps 3 through 10.
31. Install the vent and drain alternate port covers and torque the bolts to 100 ±10 inch-pounds.
32. If an alternate port cover containment O-ring seal was replaced, perform a helium leakage test on the affected port cover using a He MSLD in accordance with the requirements of Section 8.1.3.2.2.
33. If the alternate port cover containment seal was inspected and accepted for reuse, perform an air pressure drop leakage test on the affected port cover as follows.

a. Install a pressure test fixture to the port cover test port, including a calibrated pressure gauge with a minimum sensitivity of 0.25 psi.

b. Pressurize the port cover seal annulus to 15 psig, +1, -0 psi.

c. Isolate the gas supply and observe the pressure gauge for a minimum of five minutes.

d. The acceptance criterion for the test is no measurable drop in pressure during the minimum test time. An acceptable test assures that the minimum assembly verification leakage test sensitivity is achieved.

Note: Alternate B port covers, if used, require the satisfactory completion of a helium maintenance leakage rate test for each loaded transport. Install the Alternate B port cover and perform the maintenance leakage rate test per the requirements of 8.1.3.3.2.

34. Decontaminate the cask. Survey the cask for surface contamination and radiation dose rates.

    Note: Ensure compliance with 10 CFR 71.87(i) and 10 CFR 71.47.

35. Engage the cask lifting yoke to the lifting trunnions.

36. Lift the cask and position the cask rotation sockets in the rear rotation trunnions of the rear support structure. Carefully lower the cask to the horizontal transport orientation resting on the front saddle by moving the crane and/or the trailer as required to maintain cask engagement to the rear supports.

37. Disengage the lifting yoke from the lifting trunnions and remove it from the area.

38. Install the cask tie-down strap. Install the top and bottom impact limiters.

39. Install a TID to an attachment point on the top impact limiter.

40. Install ISO container bracing and lid.

41. Complete radiation and contamination surveys of the external surfaces of the package and record the data. Ensure removable contamination and radiation dose rate survey results comply with the limits specified in 10 CFR 71.87(i) and (j).

42. Measure the dose rate in millirems per hour at one meter from the package surface to determine the Transport Index (TI). Indicate the TI on the Radioactive Material labels applied to the package in accordance with 49 CFR 172, Subpart E.

43. Determine the appropriate Criticality Safety Index (CSI) assigned to the package contents in accordance with the Certificate of Compliance, and indicate the correct CSI on the Fissile Material label applied to the package per 49 CFR 172, Subpart E.

44. Apply appropriate placards to the transport vehicle in accordance with 49 CFR 172, Subpart F.

45. Complete the shipping documents and provide the carrier with instructions regarding the requirements for maintaining an exclusive use shipment.

7.1.11 Procedure for Dry Loading of TPBAR Waste Container

This section describes the procedure for the loading of a TPBAR Waste Container into a NAC-LWT cask in a dry loading facility. Appropriate radiological controls and procedures addressing tritium shall be utilized by the licensee, including appropriate monitoring for tritium exposure.

NAC-LWT casks to be used for the transport of TPBARs shall be configured as shown on Drawing No. 315-40-128, including Alternate B port covers.

1. Perform a receiving survey of the ISO and trailer, and inspect for damage.
2. Position the trailer in the designated cask unloading area. Set the trailer brakes and chock the wheels to prevent unintended movement. If site-specific conditions exist that require the trailer to move to allow the cask to be uprighted on its rotation trunnions, release the brakes and remove the chocks when required to complete the uprighting operations. If necessary, the ISO container may be removed from the trailer and secured in the unloading area.
3. Licensees shall receive and survey the package for radiation and removable contamination (for both gross beta-gamma and tritium) per 10 CFR 20 and 49 CFR 173. Record the survey results. If radiation or contamination levels exceed the limits of 49 CFR 173.441 or 173.443, respectively, the licensee shall notify the shipper and ensure the appropriate notifications are completed.
4. Remove the roof from the ISO container and open the front and rear ISO doors. Remove the ISO roof cross members, if installed.
5. Remove the top and bottom impact limiters.
6. Remove the cask tie-down strap. Complete the radiation and contamination surveys of the package as additional surfaces become accessible. Clean the cask surfaces as required for entry into the dry loading facility.
7. Using the cask lifting yoke with lift yoke arm guides removed, engage the lifting trunnions of the front end of the cask. Raise the cask to a vertical position on the rear cask supports, moving the crane and/or trailer, as required, to keep the cask engaged in the rear cask supports and the crane cable vertical. When the cask is vertical, block the trailer wheels and lift the cask from the container.
8. Place the cask in a transfer cart or a loading fixture. Disengage the lifting yoke.
9. Remove the Alternate B vent and drain valve port covers. Replace the metallic seal with an approved spare and inspect the Viton® O-ring seal on each cover. If the Viton® O-ring shows any damage, replace it. Ensure the replacement O-rings are properly installed and seated. Store the port cover to protect the seal surfaces. Visually inspect the vent and drain valved quick-disconnect nipples and replace, if necessary.
10. Loosen and remove all closure lid bolts.
11. Attach the lid removal fixture to the closure lid.
12. Use a transfer cart or loading fixture and move the cask into the loading position.

13. Remove the closure lid and set it on a support that is suitable for radiological control and for maintaining the cleanliness of the closure lid. Carefully inspect the Teflon O-ring seal in the underside of the closure lid. If the O-ring shows any damage, replace it. Remove the metallic O-ring and replace it with an approved spare. Ensure the replacement O-rings are properly installed and seated. Inspect the lid bolts and replace any that are damaged. Verify that the TPBAR spacer is installed on the bottom of the cask lid and not damaged when the lid is set down.
14. Install the seal surface protector in the lid cavity, if required.
15. Load the TPBAR Waste Container into the TPBAR basket positioned in the cask cavity using the required grapple or handling system. Verify the contents of the Waste Container comply with the CoC content conditions.
16. Remove the cask seal surface protector, if used, and install the cask closure lid.
17. Use the transfer cart or loading fixture and remove the cask from the loading area.
18. Inspect, install and tighten all 12 closure lid bolts to 260 ± 20 ft-lbs in three passes using the torque sequence indicated on the closure lid.
19. Connect a vacuum pump to the cask vent valve.
20. Install the drain port cover, if drain valve is not required for operations, and torque the port cover bolts to 285 ± 15 in-lbs.
21. Perform the helium mass spectrometer maintenance leakage rate test on the cask lid to leaktight criteria in accordance with the requirements of Section 8.1.3.1, Steps 3 through 10.
22. Following successful completion of the helium backfill and helium leak testing of the lid seal, monitor the cavity volume for tritium and record the results.

    Note: Tritium monitoring system shall have a minimum sensitivity of 5×10^{-3} micro curies/cc.
23. Install Alternate B port covers on the vent and drain openings and torque each port cover bolt to 285 ± 15 in-lbs. Perform a helium leakage rate test on each port cover to leaktight criteria in accordance with Section 8.1.3.3.2.
24. Decontaminate the cask. Survey the cask surface for gross beta-gamma and tritium removable contamination levels, and radiation dose rates.

    Note: Removable contamination levels and radiation levels shall comply with 49 CFR 173.443 and 173.441, respectively.
25. Using the cask lifting yoke with the guide arms removed, lift and position the cask in the rear cask supports on the ISO/trailer. Engage the trunnion pockets in the bottom end of the cask with the rotation trunnions. Lower the cask to rest on the front tiedown saddle, moving the crane, and/or trailer, as required, to keep the crane cables vertical. Disengage the cask lifting yoke from the cask lifting trunnions and set it aside.
26. Install and attach the cask tiedown strap. Install the cask top and bottom impact limiters.

27. Install a TID to an attachment point on the top impact limiter.
28. Install roof cross-members, close ISO container doors, and replace ISO container roof.
29. Complete a Health Physics survey on the external surface of the package and record the results. Complete dose rate measurements at the cask surface, at 1 meter from the cask surface, and at 2 meters from the vertical plane of the side of the transport vehicle. The maximum dose rate at 1 meter from the cask is the transport index (TI). Ensure compliance with 10 CFR 71.87(i) and observe the following criteria.
    - If the dose rate is less than 2 mSv/h (200 mrem/hr) at all accessible points on the external surface of the cask, and the TI is less than 10, the package must meet the requirements of 10 CFR 71.47 (a).
    - If the dose rate is greater than 2 mSv/h (200 mrem/hr), but is less than 10 mSv/h (1000 mrem/hr) at any point on the external surface of the package, or the TI is greater than 10, the package must be shipped as "exclusive use" and meet the requirements of 10 CFR 71.47 (b), (c) and (d). If the dose rate and shipping requirements of 10 CFR 71.47 (b), (1), (2), (3) and (4) cannot be met, the package cannot be shipped.

    Note: 10 CFR 71.47 (c) and (d) require the shipper to provide the carrier with written instructions for maintenance of the exclusive use shipment. The instructions must be included with the shipping paper information. The instructions must be sufficient so that, when followed, they cause the carrier to avoid actions that unnecessarily delay delivery or unnecessarily result in increased radiation levels or radiation exposures to transport workers or members of the general public.

    - If the dose rate is > 10 mSv/h (1000 mrem/hr) at any point on the external surface of the cask, the cask exceeds the limits of 10 CFR 71.47 and cannot be shipped.
30. Complete the shipping document, carrier instructions (if required), and apply appropriate placards and labels.

7.1.12 Procedure for Wet Loading PWR MOX Fuel Rods in a Transport Canister Into the NAC-LWT Cask

PWR MOX fuel rods (or combinations of PWR MOX and UO_2 PWR fuel rods) are required to be loaded into a screened or free flow PWR/BWR Rod Transport Canister prior to loading into the NAC-LWT cask for transport. Although a maximum quantity of 16 MOX fuel rods may be shipped, it is required that the 5 × 5 rod insert be used to position the rods in the transport canister (i.e., the 4 × 4 insert is not authorized for use for the transport of MOX fuel rods).

In order to satisfy the increased potential for release of significant quantities of radioactive materials, and as recommended by NUREG-1617, Supplement 1, the NAC-LWT cask assembly

specified for the transport of PWR MOX fuel rods contained in a transport canister provides a leaktight containment boundary.

The screened or free flow transport canister with a 5 × 5 rod insert will be loaded with up to 16 PWR MOX fuel rods (or a combination of up to 16 PWR MOX and UO_2 PWR fuel rods). In addition to the 16 PWR MOX fuel rods, up to 9 zirconium alloy-based burnable poison rods (BPRs) may be loaded into the unused insert openings.

NAC-LWT casks to be used for the transport of MOX fuel rods shall be configured as shown on Drawing No. 315-40-104, Assembly 97.

1. Perform a receiving survey of the empty cask and inspect for damage.
2. Position a trailer in the designated cask unloading area. Set the trailer brakes and chock the wheels to prevent unintended movement. If site-specific conditions exist that require the trailer to move to allow the cask to be uprighted on its rotation trunnions, release brakes and remove the chocks when required to complete uprighting operations. If an ISO is used, it may be removed from the trailer and secured in the unloading area.
3. Remove the roof from the ISO container and open the front and rear ISO doors. Remove roof cross-members, if installed.

   Note: Verify that the package nameplate displays the package identification number, USA/9225/B(U)F-96, as required by the CoC for PWR MOX fuel rods.
4. Perform a Health Physics survey of the cask and adjacent surfaces of the trailer.

   Note: A receiving survey of the cask and transporter must be performed as soon as practical after arrival at the site to assure compliance with 10 CFR 71.87(i) and 10 CFR 71.47, and to assure timely reporting of any reportable noncompliance.
5. Remove the top and bottom impact limiters.
6. Remove the cask tie-down strap.
7. Using the lifting yoke with the guides removed, engage the lifting trunnions. Raise the cask to vertical by rotating the cask rotation sockets on the rear cask supports, moving the crane and/or trailer as required to maintain the lift yoke engaged to the trunnions and the cask engaged in the rear supports. When the cask is fully vertical, lift the cask from the supports and remove it from the trailer/container.
8. Place the cask in the decontamination pit or other designated area. Disengage the lifting yoke. Clean cask surfaces of road dirt, as required, for entry into the spent fuel pool.
9. Visually inspect the neutron shield tank fill, drain and level inspection plugs for signs of neutron shield fluid leakage. If leakage is detected, verify shield tank fluid level and correct, as required.

10. Remove the vent and drain valve port covers. Prior to reinstallation of the port covers, carefully inspect the valve port cover O-ring seals and, if the O-rings show any damage, replace them with approved spares. Ensure that the replacement O-rings are properly installed and seated. Visually inspect the valved quick-disconnect nipples and replace them, if necessary.

    Note: For Alternate B port covers, replace the metallic O-ring with an approved spare prior to reinstallation.

11. Remove closure lid bolts. Attach the lid lift slings to the closure lid. Remove the closure lid and set it on a support that is suitable for radiological control and for maintaining the cleanliness of the closure lid. Prior to reinstallation of the lid, carefully inspect the Teflon O-ring seal in the underside of the closure lid. If the O-ring shows any damage, replace it. Remove the metallic O-ring and replace it with an approved spare. Ensure that the replacement O-ring(s) is properly installed and seated. Inspect the lid bolts and replace any that are damaged. Ensure that the Rod Transport Canister spacer is not damaged when the lid is set down.

12. Visually inspect the inner cavity for foreign material or damage. Install or verify the presence of the drain tube and the PWR basket assembly.

13 Fill the cask cavity with clean water. Install lift yoke arm guides and remote actuation components on the cask lifting yoke.

14. Engage the cask lifting yoke with the cask lifting trunnions and pick up the cask. Carefully lower the cask to the bottom of the cask loading area while spraying the cask down with clean water.

15. Disengage the lifting yoke from the cask and remove the yoke from the pool.

16. Identify the PWR/BWR Rod Transport Canister to be loaded and verify that a 5×5 rod insert is located in the canister.

17. Identify the PWR MOX fuel rods (and standard PWR rods and BPRs, as applicable) to be loaded into the PWR/BWR Rod Transport Canister. Verify that the fuel rods and BPRs comply with the content type, form, heat load, minimum cooling time and quantity conditions of the NAC-LWT CoC. Load the screened or free flow PWR/BWR transport canister with up to 16 PWR MOX fuel rods, a combination of MOX and standard PWR rods, and up to 9 BPRs in the open tube locations in the 5 × 5 insert. Perform an independent verification of the fuel rod selection and loading process.

18. Install the transport canister lid and torque the lid bolts to 35 ± 5 inch-pounds.

19. Position the loaded PWR/BWR Rod Transport Canister over the cask and then carefully lower it into the cask to avoid damage to the cask sealing surfaces. Note that the transport canister may be loaded into the cask with the PWR basket insert.

20. Position the cask lifting yoke over the cask closure lid. Attach the slings to the closure lid and cask lifting yoke. Lower the yoke over the cask.

21. Position the closure lid over the cask and verify that the appropriate lid spacer is installed per the approved PWR MOX fuel rod transport arrangement in Drawing 315-40-104, Section 1.4. Lower the closure lid into the lid recess using the lid match marks as guides to align the lid. Visually confirm that the closure lid is flush with the top of the cask and properly seated.

22. Lower the cask handling yoke to slack the closure lid cables. Engage the lift yoke to the lifting trunnions and begin lifting the cask.

    Note: Visually verify the yoke engagement before lifting the cask.

23. Raise the cask until the lid is slightly above the surface of the pool. At the option of the licensee/user, a number of closure lid bolts (4 to 12) may be installed hand tight.

24. Raise the cask clear of the pool, rinsing the yoke and cask with clean water and transfer the cask to the decontamination pit or other work area. Remove the yoke and lid lift slings.

25. Install and tighten the 12 closure lid bolts to 260 ± 20 ft-lb in three passes, using the torque sequence stamped on the closure lid.

26. At the option of the licensee/user, a 25 to 50 gallon clean water flush of the cask cavity may be performed by connecting a valved clean water line to the drain valve and a valved drain line to the vent valve. After the cavity flushing is completed, if performed, disconnect the water supply and drain lines.

27. Connect a nitrogen or helium gas supply line to the vent valve and the drain line to the drain valve.

28. Open the nitrogen or helium gas supply valve and pressurize the cask cavity (<30 psig) to force out the water. Continue to supply pressurized helium to the cask for a minimum of five minutes after the last residual free water discharges from the drain line. Remove the drain and gas supply lines and attach a vacuum drying system (VDS) to the cask vent valve.

29. Evacuate the cask cavity to a vacuum pressure of less than 10 torr (13 mbar) and continue vacuum pumping for a minimum of 15 minutes.

30. At the end of the vacuum pumping period, isolate the cask cavity from the vacuum pump and stop the pump. Monitor the cask cavity pressure for a minimum of 10 minutes. If the pressure rise is less than 5 torr (6.7 mbar), the cavity is verified as dry of free water. If the pressure rise is greater than 5 torr (6.7 mbar), repeat vacuum drying until the dryness verification results are satisfactory.

31. Backfill the cask cavity with helium to 0 psig (1 atmosphere, absolute), +2, -0 psi. Disconnect the VDS.

32. Perform the helium leakage test of the closure lid containment O-ring using a Helium Mass Spectrometer Leak Detector (He MSLD) in accordance with the requirements of Section 8.1.3.1, Steps 6 through 10.

33. Install the vent and drain port covers and torque the bolts to 100 ± 10 inch-pounds.

34. If an alternate port cover containment O-ring seal was replaced, perform a helium leakage test on the affected port cover using a He MSLD in accordance with the requirements of Section 8.1.3.2.2.

35. If the alternate port cover containment seal was inspected and accepted for reuse, perform a gas pressure drop leakage test on the affected port cover as follows.

    a. Install a pressure test fixture to the port cover test port, including a calibrated pressure gauge with a minimum sensitivity of 0.25 psi.

    b. Pressurize the port cover seal annulus to 15 psig, +1, -0 psi.

    c. Isolate the gas supply and observe the pressure gauge for a minimum of five minutes.

    d. The acceptance criterion for the test is no measurable drop in pressure during the minimum test time. An acceptable test assures that the minimum assembly verification leakage test sensitivity is achieved.

    Note: Alternate B port covers, if used, require the satisfactory completion of a helium maintenance leakage rate test to confirm a leaktight seal condition for each loaded transport. Install the Alternate B port cover and perform the maintenance leakage rate test per the requirements of Section 8.1.3.3.2.

36. Decontaminate the cask. Survey the cask for surface contamination and radiation dose rates.

    Note: Ensure compliance with 10 CFR 71.87(i) and 10 CFR 71.47.

37. Remove lift yoke arm guides. Engage the cask lifting yoke to the lifting trunnions.

38. Lift the cask and position the cask rotation sockets in the rear rotation trunnions of the rear support structure. Carefully lower the cask to the horizontal transport orientation resting on the front saddle by moving the crane and/or trailer, as required, to maintain cask engagement to the rear supports.

39. Disengage the cask lifting yoke from the cask lifting trunnions and remove it from the area.

40. Install the cask tie-down strap. Install the top and bottom impact limiters.

41. Install a TID to an attachment point on the top impact limiter.

42. Install roof cross-members, close ISO container doors, and replace ISO container roof.

43. Complete radiation and contamination surveys of the external surfaces of the package and record the data. Ensure removable contamination and radiation dose rate survey results comply with the limits specified in 10 CFR 71.87(i) and (j).

44. Measure the dose rate in millirems per hour at one meter from the package surface to determine the Transport Index (TI). Indicate the TI on the Radioactive Material labels applied to the package in accordance with 49 CFR 172, Subpart E.

45. Determine the appropriate Criticality Safety Index (CSI) assigned to the package contents in accordance with the CoC, and indicate the correct CSI on the Fissile Material label applied to the package per 49 CFR 172, Subpart E.

46. Apply appropriate placards to the transport vehicle in accordance with 49 CFR 172, Subpart F.

47. Complete the shipping documents and provide the carrier with instructions regarding the requirements for maintaining an exclusive use shipment.

7.2 Procedures for Unloading Package

In general, the procedure for unloading the package is the reverse of that presented for loading the package (Section 7.1). Specific generic procedures are provided in this section for the wet and dry unloading of various authorized contents from the NAC-LWT cask. As required to accommodate specific facilities and equipment, site-specific procedures shall be prepared and utilized for the unloading operations as appropriate to the contents.

7.2.1 Procedures for Wet Unloading of LWR Fuel and PWR, PWR MOX and BWR Fuel Rods in Transport Canisters

The procedures for unloading the package are as follows:

1. Perform a receipt inspection of the cask and trailer/ISO container, inspecting for transport damage.
2. Position the trailer in the designated cask unloading area. Set the trailer brakes and chock the wheels to prevent unintended movement. If site-specific conditions exist that require the trailer to move to allow the cask to be uprighted on its rotation trunnions, release brakes and remove the chocks when required to complete uprighting operations. If an ISO container is used, it may be removed from the trailer and secured in the unloading area.
3. Remove the lid/top of the ISO container and remove any bracing, or the personnel barrier.

   Note: Verify that the package nameplate displays the correct package identification number in accordance with the CoC.
4. Licensees shall monitor the package for radioactive contamination and radiation levels in accordance with 10 CFR 20.1906. If contamination levels exceed 10 CFR 71.87(i) or radiation levels exceed the limits of 10 CFR 71.47, the licensee shall notify the NRC Operations Center.
5. Verify the TID identification number on the top impact limiter to confirm tampering with the package did not occur.
6. Remove the top and bottom impact limiters.
7. Remove the cask tie-down strap.
8. Using the lifting yoke with the guides removed, engage the lifting trunnions. Raise the cask to vertical by rotating the cask rotation sockets on the rear cask supports, moving the crane and/or trailer as required to keep the lift yoke engaged to the trunnions and the cask engaged in the rear supports. When the cask is fully vertical, lift the cask from the supports and remove it from the trailer/container.

9. Place the cask in the decontamination pit or other designated area. Disengage the lifting yoke. Clean cask surfaces of road dirt as required for entry into the spent fuel pool.

10. Remove the vent and drain valve port covers. Connect a pressure gauge and isolation valve assembly to the cask vent valve.

11. Connect vent and clean water fill lines to the vent and drain valves.

12. Open the water supply valve to allow water to slowly enter the cask cavity.

    Note: The hot gases exiting from the vent valve could be highly radioactive. The exhaust gases must, therefore, be routed to an off-gas process system. The cask cavity does not contain a relief valve; therefore, any system for cooling down the package must be provided with a pressure relief device set so that the maximum pressure in the cask cavity does not exceed 100 psig. Coolant flow rates should be controlled to avoid thermal shock to the cask internals.

13. Continue the filling procedure until the cask cavity is filled with water. Remove fill and vent lines.

14. Loosen and remove the closure lid bolts. At the option of licensee/user, some bolts (i.e., 4-12) may be left installed hand tight for the cask movement to the spent fuel pool.

15. Engage the cask lifting yoke (with slings, yoke arm guides and remote actuation system components attached) with the cask lifting trunnions and connect the closure lid to the lifting yoke slings.

16. Position the cask over the spent fuel pool and lower the cask until the top of the cask is at an elevation that permits access to the closure lid bolts.

17. Remove any remaining closure lid bolts.

18. Carefully lower the cask to rest on the bottom of the cask unloading area while spraying the cask's exterior surfaces with clean water to minimize contamination.

19. Disengage the lifting yoke from the cask and slowly raise the yoke until the closure lid is raised clear of the cask. Remove the yoke from the vicinity of the cask to provide clearance for unloading the cask.

20. Unload the contents of the cask cavity (i.e., fuel assemblies or Rod Transport Canister containing PWR or BWR fuel rods and nonfuel-bearing components, if applicable) using the required grapple system. Verify that the unloaded contents conform to the contents described in the cask loading report. Place the fuel assemblies or transport canisters into storage or prepare them for further processing.

21. Position the cask lifting yoke with the cask closure lid over the cask cavity and slowly lower it into place using the cask and closure lid match marks as guides. Visually confirm that the closure lid is seated.

22. Engage the cask lifting yoke with the cask trunnions and raise the cask.

    Note: Verify yoke engagement before lifting the cask.

23. Raise the cask until the lid is slightly above the surface of the pool. At the option of the licensee/user, several of the closure lid bolts (i.e., 4-12) may be installed hand tight.
24. Raise the cask clear of the pool, rinsing the yoke and cask with clean water.
25. Transfer the cask to the decontamination pit or other work area. Remove the yoke and lid lift slings.
26. Install and tighten all 12 closure lid bolts to 260 ± 20 ft-lb in three passes, using the torque sequence stamped on the closure lid.
27. At the option of the licensee/user, a 25 to 50 gallon clean water flush of the cask cavity may be performed by connecting a valved, clean water line to the drain valve and a valved drain line to the vent valve. After the cavity flushing is completed, if performed, disconnect the water supply and drain lines.
28. Connect a gas (air, nitrogen or helium) supply line to the vent valve and the drain line to the drain valve.
29. Open the gas supply valve and pressurize the cask cavity (<30 psig) to force out the water. Continue to supply gas to the cask cavity for a minimum of five minutes after the last residual free water discharges from the drain line.
30. Remove the gas supply and drain lines.
31. Install the alternate port covers over the vent and drain valves and tighten the port cover bolts to 100 ± 10 inch-pounds. For Alternate B port covers, install and torque the high-strength bolts to 285 ± 15 inch-pounds.

    Note: It is not necessary to inspect or replace the port cover seals. Seal inspection and replacement, if required, will be performed prior to the next loaded transport.

7.2.2 Procedures for Wet Unloading of Metallic Fuel

The procedure for unloading the metallic fuel from the package in a spent fuel pool is as follows.

1. Perform a receipt inspection of the cask and trailer/ISO container, inspecting for transport damage.
2. Position the trailer in the designated cask unloading area. Set the trailer brakes and chock the wheels to prevent unintended movement. If site-specific conditions exist that require the trailer to move to allow the cask to be uprighted on its rotation trunnions, release brakes and remove the chocks when required to complete uprighting operations. If an ISO container is used, it may be removed from the trailer and secured in the unloading area.
3. Remove the lid/top of the ISO container and remove any bracing, or the personnel barrier.

   Note: Verify that the package nameplate displays the correct package identification number in accordance with the CoC.

4. Licensees shall monitor the package for radioactive contamination and radiation levels in accordance with 10 CFR 20.1906. If contamination levels exceed 10 CFR 71.87(i) or radiation levels exceed the limits of 10 CFR 71.47, the licensee shall notify the NRC Operations Center.
5. Verify the TID identification number on the top impact limiter to confirm tampering with the package did not occur.
6. Remove the top and bottom impact limiters.
7. Remove the cask tie-down strap.
8. Using the lifting yoke with the guides removed, engage the lifting trunnions. Raise the cask to vertical by rotating the cask rotation sockets on the rear cask supports, moving the crane and/or trailer as required to keep the lift yoke engaged to the trunnions and the cask engaged in the rear supports. When the cask is fully vertical, lift the cask from the supports and remove it from the trailer/container.
9. Place the cask in the decontamination pit or other designated area. Disengage the lifting yoke. Clean cask surfaces of road dirt as required for entry into the spent fuel pool.
10. Remove the vent valve and drain valve port covers. Connect a pressure gauge and isolation valve assembly to the cask vent valve. Open the isolation valve and record the internal pressure reading (if any). Using a suitable air line and the gauge/valve assembly, vent the cask cavity to an off-gas handling unit.
11. Connect vent and clean water fill lines to the vent and drain valves.
12. Open the water supply valve to allow water to slowly enter the cask cavity.

    Note: The hot gases exiting from the vent valve could be highly radioactive. The exhaust gases must, therefore, be routed to an off-gas process system. The cask cavity does not contain a relief valve; therefore, any system for cooling down the package must be provided with a pressure relief device set so that the maximum pressure in the cask cavity does not exceed 100 psig. Coolant flow rates should be controlled to avoid thermal shock to the cask internals.

13. Continue the filling procedure until the cask cavity is filled with water. Remove fill and vent lines.
14. Loosen and remove the 12 closure lid bolts. At the option of licensee/user, some bolts (i.e., 4-12) may be left installed hand tight for the cask movement to the spent fuel pool.
15. Engage the cask lifting yoke (with slings, lift yoke arm guides and remote actuation system components attached) with the cask lifting trunnions and connect the closure lid to the lifting yoke slings.
16. Position the cask over the spent fuel pool and lower the cask until the top of the cask is at an elevation, which permits access to the closure lid bolts.
17. Remove any remaining closure lid bolts, inspect and store.

18. Carefully lower the cask to rest on the bottom of the cask unloading area while spraying the exterior surfaces of the cask with clean water to minimize contamination.
19. Disengage the lifting yoke from the cask and slowly raise the yoke until the closure lid is raised clear of the cask. Remove the yoke from the vicinity of the cask to provide clearance for unloading the cask.

    Note: Closure lid may be brought out of the pool and later assembled to the empty cask.
20. Unload the contents of the cask cavity using the required grapple system.
21. Position the cask lifting yoke with the cask closure lid over the cask cavity and slowly lower it into place using the cask and closure lid match marks as guides. Visually confirm that the closure lid is seated.
22. Engage the cask lifting yoke with the cask trunnions and raise the cask.
23. Raise the cask until the lid is slightly above the surface of the pool. At the option of the licensee/user, several of the closure lid bolts (i.e., 4-12) may be installed hand tight.
24. Raise the cask clear of the pool, rinsing the yoke and cask with clean water.
25. Transfer the cask to the decontamination pit or other work area. Remove the yoke and lid lift slings.
26. Install and tighten the 12 closure lid bolts to 260 ± 20 ft-lb in three passes, using the torque sequence stamped on the closure lid.
27. At the option of the licensee/user, a 25 to 50 gallon clean water flush of the cask cavity may be performed by connecting a valved, clean water line to the drain valve and a valved drain line to the vent valve. After the cavity flushing is completed, if performed, disconnect the water supply and drain lines.
28. Connect a gas (air, nitrogen or helium) supply line to the vent valve and the drain line to the drain valve.
29. Open the gas supply valve and pressurize the cask cavity (<30 psig) to force out the water. Continue to supply gas to the cask cavity for a minimum of five minutes after the last residual free water discharges from the drain line.
30. Remove the gas supply and drain lines.
31. Install the alternate port covers over the vent and drain valves and tighten the port cover bolts to 100 ± 10 in-lb. For Alternate B port covers, install and torque the high-strength bolts to 285 ± 15 inch-pound.

    Note: It is not necessary to inspect or replace the port cover seals. Seal inspection and replacement, if required, will be performed prior to the next loaded transport.

7.2.3 Procedure for Wet Unloading of MTR, TRIGA, DIDO, ANSTO or PULSTAR Fuel Basket Contents

The procedure for the unloading of MTR, TRIGA, DIDO, ANSTO or PULSTAR fuel basket contents from the package in a spent fuel pool is as follows:

1. Perform a receiving survey of the cask and inspect for transport damage.
2. Position the trailer in the designated cask unloading area. Set the trailer brakes and chock the wheels to prevent unintended movement. If site-specific conditions exist that require the trailer to move to allow the cask to be uprighted on its rotation trunnions, release the brakes and remove the chocks when required to complete the uprighting operations. If an ISO container is used, it may be removed from the trailer and secured in the loading area.
3. Remove the roof from the ISO container, and open the front and rear ISO doors. Remove roof cross-members, if installed.

   Note: Verify that the package nameplate displays the correct package identification number in accordance with the CoC.
4. Licensees shall monitor the package for radioactive contamination and radiation levels in accordance with 10 CFR 20.1906. If contamination levels exceed 10 CFR 71.87(i) or radiation levels exceed the limits of 10 CFR 71.47, the licensee shall notify the NRC Operations Center.
5. Verify the TID identification number on the top impact limiter to confirm tampering with the package did not occur.
6. Remove the top and bottom impact limiters.
7. Remove the cask tie-down strap.
8. Using the cask lifting yoke with left yoke arm guides removed, engage the lifting trunnions of the front end of the cask. Raise the cask to a vertical position on the rear cask support, moving the crane as necessary to keep the cask engaged in the rear rotation supports and the crane cable vertical. When the cask is vertical, lift the cask from the container supports.
9. Place the cask in the decontamination pit or other site designated area. Disengage the lifting yoke. Clean cask surfaces of road dirt as required for entry into the spent fuel pool.
10. Remove the vent valve and drain valve port covers. Connect a pressure gauge and isolation valve assembly to the cask vent valve. Open the isolation valve and record the internal pressure reading (if any). Using a suitable air line and the gauge/valve assembly, vent the cask cavity to an off-gas handling unit.
11. Connect vent and clean water fill lines to the vent and drain valves.
12. Open the water supply valve to allow water to slowly enter the cask cavity.

Note: Gases or steam exiting the vent may be radioactive. The vent line should be routed to an off-gas process system or a HEPA filter. The system for cooling down the package shall contain a pressure relief device set to ensure that the cask internal pressure is maintained below 100 psig. Coolant flow rates are to be controlled to avoid thermal shock to the fuel contents.

13. Continue the filling procedure until the cask cavity is filled with water. Remove fill and vent lines.

14. Loosen and remove the 12 closure lid bolts. At the option of licensee/user, some bolts (i.e., 4-12) may be left installed hand tight for the cask movement to the spent fuel pool.

15. Engage the cask lifting yoke (with slings, yoke arm guides and remote actuation system components attached) with the cask lifting trunnions and connect the closure lid to the lifting yoke slings.

16. Position the cask over the spent fuel storage pool and lower the cask until the top of the cask is at an elevation which allows access for the removal of the closure lid bolts.

17. Remove any remaining closure lid bolts, inspect and store.

18. Carefully lower the cask to rest on the bottom of the cask unloading area while spraying the exterior surfaces of the cask with clean water to minimize contamination. Disengage the lifting yoke from the lifting trunnions and slowly raise the yoke until the closure lid is raised clear of the cask. Remove the yoke from the vicinity of the cask to provide for clearance for unloading the cask.

    Note: The closure lid may be brought out of the pool and later assembled to the empty cask.

19. Unload the MTR, TRIGA, DIDO, spiral, MOATA plate or PULSTAR fuel assemblies or fuel cans from the top basket module using the appropriate grapple or handling system. As required, remove empty basket modules from the cask cavity to allow access to the next basket module. Continue fuel unloading operations until all fuel assemblies, fuel cans, and empty basket modules are removed from the cavity. Alternatively, each basket module containing fuel assemblies or damaged fuel cans may be unloaded from the cask cavity and stored in the spent fuel pool. Continue unloading until all basket modules have been removed.

20. Position the cask lifting yoke with guide arms and remote actuation components installed over the cask closure lid. Attach the slings to the cask closure lid and cask lifting yoke.

21. Position the cask lifting yoke and closure lid over the cask cavity and slowly lower it into place using the cask and closure lid match marks as guides. Visually confirm that the closure lid is seated.

    Note: The closure lid may be installed separately after the empty cask is removed from the spent fuel pool.

22. Engage the cask lifting yoke with the cask trunnions and raise the cask.

23. Raise the cask until the lid is slightly above the surface of the pool. At the option of the licensee/user, several of the closure lid bolts (i.e., 4-12) may be installed hand tight.
24. Raise the cask clear of the pool, rinsing the yoke and cask with clean water.
25. Transfer the cask to the decontamination pit or other work area. Remove the yoke and lid lift slings.
26. Install and tighten four closure lid bolts to 100 ± 10 ft-lb using the torque sequence stamped on the closure lid.
27. At the option of the licensee/user, a 25 to 50 gallon clean water flush of the cask cavity may be performed by connecting a valved, clean water line to the drain valve and a valved drain line to the vent valve. After the cavity flushing is completed, if performed, disconnect the water supply and drain lines.
28. Connect a gas (air, nitrogen or helium) supply line to the vent valve and the drain line to the drain valve.
29. Open the gas supply valve and pressurize the cask cavity (<30 psig) to force out the water. Continue to supply gas to the cask cavity for a minimum of five minutes after the last residual free water discharges from the drain line.
30. Remove the gas supply and water drain lines.
31. Remove the four closure lid bolts and lift the lid clear of the cask.

    Note: It is not necessary to inspect or replace the closure lid metallic seal. A new metallic seal will be installed and tested prior to the next loaded transport.

32. Remove the drain tube assembly and drain tube alignment ring from the cask cavity.
33. Reinstall the closure lid and install the 12 closure lid bolts. Torque the bolts to 260 ± 20 ft-lbs in three passes using the torque sequence indicated in the closure lid.
34. Install the alternate port covers over the vent and drain valves and tighten the port cover bolts to 100 ± 10 inch-pounds. For Alternate B port covers, install and torque the high-strength bolts to 285 ± 15 inch-pounds.

    Note: It is not necessary to inspect or replace the port cover seals. Seal inspection and replacement, if required, will be performed prior to the next loaded transport.

7.2.4 Procedure for Dry Unloading of MTR, TRIGA, DIDO, ANSTO or PULSTAR Fuel Contents

This section describes the procedure for unloading of MTR, TRIGA, DIDO, ANSTO or PULSTAR fuel basket contents from the NAC-LWT in a cell or a dry unloading fixture.

1. Perform a receiving survey of the cask and inspect for transport damage.
2. Position the trailer in the designated cask unloading area. Set the trailer brakes and chock the wheels to prevent unintended movement. If site-specific conditions exist that require the trailer to move to allow the cask to be uprighted on its rotation trunnions,

release the brakes and remove the chocks when required to complete the uprighting operations. If an ISO container is used, the ISO container may be removed from the trailer and secured in the unloading area.

3. Remove the roof from the ISO container and open the front and rear ISO doors. Remove roof cross-members, if installed.

   Note: Verify that the package nameplate displays the correct package identification number in accordance with the CoC.

4. Licensees shall monitor the package for radioactive contamination and radiation levels in accordance with 10 CFR 20.1906. If contamination levels exceed 10 CFR 71.87(i) or radiation levels exceed the limits of 10 CFR 71.47, the licensee shall notify the NRC Operations Center.

5. Verify the TID identification number on the top impact limiter to confirm tampering with the package did not occur.

6. Remove the top and bottom impact limiters.

7. Remove the cask tie-down strap. Clean the cask surfaces as required for entry into the hot cell.

8. Using the cask lifting yoke with lift yoke arm guides removed, engage the lifting trunnions of the front end of the cask. Raise the cask to a vertical position on the rear cask support, moving the crane and/or trailer, as required, to keep the cask engaged in the rear rotation supports and the crane cable vertical. When the cask is vertical, block the trailer wheels and lift the cask from the container.

9. Place the cask in the cell transfer cart or unloading fixture. Disengage the lifting yoke.

10. Remove the vent valve port cover.

11. Connect vent line to the vent valve.

    Note: The hot gases exiting from the vent may be highly radioactive and the exhaust gas should be routed to an off-gas process system or to a HEPA filter.

12. Allow the cask to vent. Remove vent line.

13. Loosen and remove the 12 closure lid bolts. Visually inspect and store the bolts.

14. Attach the lid removal fixture.

15. Using the hot cell transfer cart or unloading fixture, move the cask into the unloading position.

16. Remove the cask lid.

    Note: It is not necessary to inspect or replace the closure lid metallic seal. A new metallic seal will be installed and tested prior to the next loaded shipment.

17. Install the seal surface protector in the lid cavity, if required.

18. Unload the MTR, TRIGA, DIDO, ANSTO or PULSTAR fuel basket modules from the cask cavity using the required grapple or handling system.

19. Remove the cask seal surface protector, if installed, and replace the cask lid.
20. Using the cell transfer cart or unloading fixture, remove the cask.
21. Remove the lid from the cask and remove the drain tube and drain tube alignment ring
22. Replace the cask lid and remove the lid removal fixture.
23. Install and tighten all 12 closure lid bolts to 260 ± 20 ft-lbs in three passes using the torque sequence indicated on the closure lid.
24. Install the port covers over the vent and drain valves and tighten the port cover bolts to 100 ±10 inch-pounds. For Alternate B port covers, install and torque the high-strength bolts to 285 ±10 inch-pounds.

    Note: It is not necessary to inspect or replace the port cover seals. Seal inspection replacement and leak testing will be performed prior to the next loaded transport.

7.2.5 Procedure for Dry Unloading of TPBAR Contents

This section describes the procedure for the unloading of a consolidation canister, a PWR/BWR Rod Transport Canister or a waste container that contains TPBARs from the NAC-LWT in a dry unloading facility.

1. Perform a receiving survey of the ISO container and trailer, and inspect for damage.
2. Position the trailer in the designated cask unloading area. Set the trailer brakes and chock the wheels to prevent unintended movement. If site-specific conditions exist that require the trailer to move to allow the cask to be uprighted on its rotation trunnions, release the brakes and remove the chocks when required to complete the uprighting operations. If necessary, the ISO container may be removed from the trailer and secured in the unloading area.
3. Licensees shall receive and survey the package for radiation and removable contamination (for both gross beta-gamma and tritium) per 10 CFR 20 and 49 CFR 173. Record the survey results. If radiation or contamination levels exceed the limits of 49 CFR 173.441 or 173.443, respectively, the licensee shall notify the shipper and ensure the appropriate notifications are completed.
4. Remove the roof from the ISO container and open the front and rear ISO doors. Remove the ISO roof cross members, if installed.
5. Verify the TID identification number on the top impact limiter to confirm tampering with the package did not occur.
6. Remove the top and bottom impact limiters.
7. Remove the cask tie-down strap. Complete the radiation and contamination surveys of the package as additional surfaces become accessible. Clean the cask surfaces as required for entry into the dry unloading facility.

8. Using the cask lifting yoke with lift yoke arm guides removed; engage the lifting trunnions of the front end of the cask. Raise the cask to a vertical position on the rear cask support, moving the crane and/or trailer, as required, to keep the cask engaged in the rear rotation supports and the crane cable vertical. When the cask is vertical, block the trailer wheels and lift the cask from the container.
9. Place the cask in a transfer cart or an unloading fixture. Disengage the lifting yoke.
10. Remove the vent and drain valve port covers.
11. Connect a tritium monitoring system to the vent and drain quick-disconnect valves, and operate the device in accordance with the manufacturer's instructions. The tritium monitoring system shall have a minimum sensitivity of 5×10^{-3} micro curie/cc.
12. Monitor the cavity gas for tritium. If the gas sample measurement indicates a tritium gas concentration greater than 1×10^{-2} micro curie/cc, the cask internals must be decontaminated after unloading is completed and prior to subsequent use in transporting non-TPBAR contents.

    Note: The gases exiting from the cavity may be radioactive and contaminated with tritium, and at an elevated temperature. Cavity gases should be controlled per the site requirements.
13. Vent the cask cavity. Remove the gas lines and monitoring system from the vent and drain valves.
14. Loosen and remove all closure lid bolts.
15. Attach the lid removal fixture.
16. Use a transfer cart or unloading fixture and move the cask into the unloading position.
17. Remove the cask lid.

    Note: Replacement of the closure lid metallic seal is not required. A new metallic seal will be installed and leak tested prior to the next loaded shipment.
18. Install the seal surface protector in the lid cavity, if required.
19. Unload the TPBAR contents from the cask cavity using the required grapple or handling system.
20. Using the transfer cart or unloading fixture, remove the cask from the unloading area.
21. Collect an ambient air sample near the cask cavity opening. If the measured tritium gas concentration exceeds 1×10^{-2} micro curie/cc, the cask cavity must be decontaminated after unloading and prior to subsequent use in transporting non-TPBAR contents.
22. Survey the accessible inside surfaces of the cask cavity and internal components (i.e., upper 2 feet) for tritium contamination. If measured tritium removable contamination is greater than $2.2 \times 10^{+4}$ dpm/100 cm^2, the cask must be decontaminated after unloading is completed and prior to subsequent use in transporting non-TPBAR contents.

    Note: If significantly higher tritium contamination levels and the need for repeated decontamination become indicative of residual tritium contamination in the

crystalline structure of the cask interior with potential for weeping, NAC will notify the NRC of the condition and its action.

23. Remove the cask seal surface protector, if used, and install the cask lid.
24. Inspect, install and tighten all 12 closure lid bolts to 260 ± 20 ft-lbs in three passes using the torque sequence indicated on the closure lid.

    Note: Replacement of the vent and drain port cover metallic seals is not required. New metallic seals will be installed and leak tested prior to the next loaded shipment.

25. Install the port covers on the vent and drain ports and torque the port cover bolts to 285 ± 15 inch-pounds.

7.2.6 Procedure for Dry Unloading of PWR/BWR/MOX Fuel Rod Contents

This section describes the procedure for the unloading of a PWR/BWR Rod Transport Canister from the NAC-LWT cask in a dry unloading facility.

1. Perform a receiving survey of the ISO container and trailer, and inspect for damage.
2. Position the trailer in the designated cask unloading area. Set the trailer brakes and chock the wheels to prevent unintended movement. If site-specific conditions exist that require the trailer to move to allow the cask to be uprighted on its rotation trunnions, release the brakes and remove the chocks when required to complete the uprighting operations. If necessary, the ISO container may be removed from the trailer and secured in the unloading area.
3. Licensees shall receive and survey the package for radiation and removable contamination per 10 CFR 20 and 49 CFR 173. Record the survey results. If radiation or contamination levels exceed the limits of 49 CFR 173.441 or 173.443, respectively, the licensee shall notify the shipper and ensure the appropriate notifications are completed.
4. Remove the roof from the ISO container and open the front and rear ISO doors. Remove the ISO roof cross members, if installed.
5. Verify the TID identification number on the top impact limiter to confirm tampering with the package did not occur.
6. Remove the top and bottom impact limiters.
7. Remove the cask tie-down straps. Complete the radiation and contamination surveys of the package as additional surfaces become accessible. Clean the cask surfaces as required for entry into the dry unloading facility.
8. Using the cask lifting yoke with lift yoke arm guides removed, engage the lifting trunnions of the front end of the cask. Raise the cask to a vertical position on the rear cask support, moving the crane and/or trailer, as required, to keep the cask engaged in the rear rotation supports and the crane cable vertical. When the cask is vertical, block the trailer wheels and lift the cask from the container.

9. Place the cask in a transfer cart or an unloading fixture. Disengage the lifting yoke.
10. Remove the vent and drain valve port covers.
11. Connect the vent line with pressure gauge and isolation valve to the vent port quick disconnect coupling.

    Note: At the discretion of the receiving facility, a gas sample may be taken prior to cavity venting to determine if leakage from the fuel rods occurred during transport.

    Note: The gases exiting from the cavity may be radioactive and at an elevated temperature and pressure. Cavity gases should be controlled and vented to radioactive gas treatment systems per site requirements.
12. Vent the cask cavity. Remove the vent line from the vent valves.
13. Attach the lid removal fixture.
14. Loosen and remove all closure lid bolts.
15. Use the transfer cart or unloading fixture and move the cask into the unloading position.
16. Remove the cask lid.

    Note: Replacement of the closure lid metallic seal is not required. A new metallic seal will be installed and leak tested prior to the next loaded shipment.
17. Install the seal surface protector in the lid cavity, if required.
18. Unload the PWR/BWR Rod Transport Canister and/or its contents, including PWR, PWR MOX or BWR fuel rods and nonfuel-bearing components, if applicable, using the appropriate grapple or handling system.
19. Using the transfer cart or unloading fixture, remove the cask from the unloading area.
20. Remove the cask seal surface protector, if used, and install the cask lid.
21. Inspect, install and tighten all 12 closure lid bolts to 260 ± 20 ft-lbs in three passes using the torque sequence indicated on the closure lid.

    Note: Inspection or replacement of the vent and drain port cover metallic seals is not required. New metallic seals will be installed and leak tested prior to the next loaded shipment.
22. Install the port covers on the vent and drain ports and torque the port cover bolts to 100 ± 10 inch-pounds for the alternate port covers or 285 ± 15 inch-pounds for the Alternate B port covers.