7 INSTRUMENTATION AND CONTROLS

7.1 INTRODUCTION

Complete supervision of both the nuclear and turbine-generator sections of the plant is accomplished by the instrumentation and control systems from the control room. This supervision includes the capability to periodically test the operability of the Reactor Trip System (RTS) while on-line.

In 1996, the NRC issued Generic Letter 96-01 (*Reference 3*) to notify licensees about problems with testing of safety-related logic circuits and to request that surveillance procedures be reviewed and modified as necessary to ensure that all portions of the logic circuitry, including parallel logic, interlocks, bypasses and inhibit circuits, are adequately covered to fulfill Technical Specification requirements. RG&E's response to GL 96-01 (*Reference 4*) stated that the NRC's requested actions would be complied with. In *Reference 5*, RG&E informed the NRC that the safety-related circuits had been evaluated and tested utilizing the criteria of GL 96-01 and that identified procedural deficiencies had been corrected and identified procedural weaknesses would be resolved within the allotted time period stipulated in GL 96-01. RG&E in *Reference 6* notified the NRC that all required actions for GL 96-01 had been completed. The NRC in *Reference 7* reviewed and accepted RG&E's response and closed out GL 96-01.

7.1.1 IDENTIFICATION OF SAFETY-RELATED SYSTEMS

The protection systems consist of both the Reactor Trip System (RTS) and the engineered safety features. Equipment supplying signals to any of these protective systems is considered a part of that protective system.

Design criteria for protection systems should permit maximum effective use of process measurements both for control and protection functions, thus enhancing the capability to provide an adequate system to deal with the majority of common-mode failures as well as to provide redundancy for critical control functions. The design approach provides a protection system which monitors numerous system variables by different means, i.e., protection system diversity. This diversity has been evaluated for a wide variety of postulated accidents (*Reference 1*).

Instrumentation and controls essential to avoid undue risk to the health and safety of the public are provided to monitor and maintain neutron flux, primary coolant pressure, flow rate, temperature, and control rod positions within prescribed operating ranges.

The non-nuclear regulating process and containment instrumentation measures temperatures, pressure, flow, and levels in the reactor coolant system, steam systems, containment, and other auxiliary systems. Process variables required on a continuous basis for the startup, operation, and shutdown of the plant are indicated, recorded, and controlled from the control room into which access is supervised. The quantity and types of process instrumentation provided ensure safe and orderly operation of all systems and processes over the full operating range of the plant.

7.1.2 IDENTIFICATION OF SAFETY CRITERIA

7.1.2.1 General Design Criteria

During the licensing of Ginna Station the criterion which applied in common to all instrumentation and control systems was General Design Criterion 12 (GDC 12) which was included in the Atomic Industrial Forum (AIF) version of proposed criteria issued by the AEC for comment on July 10, 1967. The AIF criteria including AIF-GDC 12 are discussed in detail in Section 3.1.1.

The design of the instrumentation and control systems was reviewed in 1972 (*Reference 2*) on the bases of the General Design Criteria contained in Appendix A to 10 CFR 50 and the criteria included in IEEE 279-1971, both of which were promulgated after the licensing of Ginna Station. Compliance of the design with 1972 General Design Criteria of Appendix A to 10 CFR 50 is discussed in Section 3.1.2.

Evaluation of the design with respect to guidance provided in Safety and Regulatory Guides effective in 1972 is discussed in Section 1.8.

7.1.2.2 Compliance with IEEE 279-1971

Compliance with IEEE 279-1971 Criteria for Protection Systems For Nuclear Power Generating Stations is discussed below.

7.1.2.2.1 Design Basis

The Ginna Station conditions which require protective system action are enumerated in the Technical Specifications. The Ginna Station variables that are required to be monitored and the levels that when reached will require protective action are also described in the Technical Specifications. The protection system is designed to perform automatically with precision and reliability to initiate appropriate protective action when required.

The source, intermediate, and power range sensors, their locations and range of operation, are described in Section 7.7.3. The neutron sensors are the only Ginna Station protective system components possessing a spatial dependence. The number of source, intermediate, and power range neutron-flux-measuring sensors, which can be inoperable without deleterious effect on the safety of continued Ginna Station operation are described in the Technical Specifications.

The instrumentation systems are designed to perform their functions while accommodating system response times and inaccuracies. The Technical Specifications list the limiting safety system settings for protective instrumentation. Instrument errors, setpoint errors, instrument delay times, and calorimetric errors are taken into account in transient analyses, which are discussed in Chapter 15.

Prudent operational limits for each variable referenced above are interpreted to be those levels, which will produce alarms but will not necessarily produce a protective system action. Each process variable referenced above has, in addition to its alarm function, a level providing protection system action. These values are called out and verified in the preoperational

tests that were performed. The operational modes in which these are applicable are specified in the Technical Specifications.

The range of transient and steady-state conditions of both the energy supply and the environment during normal, abnormal, and accident circumstances throughout which the system must perform has been evaluated and appropriate features have been incorporated to accommodate them. The Reactor Trip System (RTS) is designed to fail safe, i.e., to produce a protective action in the event of loss of power to the protection system. All system components are designed to operate indefinitely under the environmental conditions to which they are exposed under both steady-state and transient, and normal and anticipated abnormal station operating conditions. Reactor Trip System (RTS) components, which can be exposed to excessive heat, humidity, and pressure due to the accidents described in Chapter 15, are qualified to perform their required functions for the duration of time required for engineered safety features operation and postaccident monitoring. Environmental qualification is discussed in Section 3.11.

Because of the design, physical separation and electrical isolation, fire, missiles, and natural phenomena are not likely to affect a sufficient number of channels so as to compromise the system functions. Compliance with the separation and single-failure criteria and "fail safe" design ensure that the system will operate reliably on demand. All channels of the Reactor Trip System (RTS) are subject to the same environmental conditions in the control room although channel separation and electrical isolation are maintained. Should evacuation of the control room be required, alternative means of safely shutting down Ginna Station from outside the control room are provided. These are discussed in Section 7.4.3.

The protection system seismic design requirements are such that the safe shutdown earthquake will not result in loss of the system function. Seismic qualification is discussed in Section 3.10.

7.1.2.2.2 Requirements

7.1.2.2.2.1 Operability

The Ginna Station protection systems, with precision and reliability, automatically initiate appropriate protective action whenever a condition monitored by the system reaches a preset level. The Reactor Trip System (RTS) will automatically initiate load cutbacks, inhibit rod withdrawal, or trip the reactor depending on the severity of the condition. The instrumentation used to initiate action other than trip is generally similar to the Reactor Trip System (RTS). The protection systems are further described in Section 7.2.

As described in Section 7.2, the protection systems not only accommodate any single failure without loss of function but also provide protection against spurious actuation because of the coincident logic design.

The quality of instruments and components for use in the protection system was specifically examined during the design to ensure that they were consistent with the objectives of minimum maintenance and low failure rates.

Channel independence is carried through the system extending from the sensor to the relay providing the logic. The ac power supplies to the channels are excited by four separate instrument buses. Independence is maintained by use of separate channel penetrations, cable trays, and equipment compartments.

Control and protection systems employ the same measurement where applicable. The protection is separate and distinct from the control system. Control signals which are derived from the protection system measurements are transferred through isolation amplifiers. This prevents a failure in the control circuitry from affecting the protection system. The isolation amplifiers are classified protection system components and have been qualified by testing under conditions of maximum postulated faults.

The design is such that a single random failure which could cause a control system action resulting in a station condition requiring protection is seen as a trip demand in the channel designed to protect against the condition. The remaining redundant protection channels may be degraded by a second random failure or removed from service without loss of the protection function.

The design provides a protection system which monitors a wide spectrum of process variables by different means. Equipment, location, and measurement diversity protects against multiple failures from a credible single event.

Routing and separation standards applicable to existing cables are those that were invoked at the time of cable installation. For more information, see Section 8.3.1.4.

7.1.2.2.2.2 Testability

The entire protection system has the capability of being tested and calibrated with the reactor at power. Testing is discussed in Section 7.2. All instrumentation has the capability for sensor checks. Sensor testing can be done by perturbing the system variable, introducing a substitute input or by comparing sensors which measure a like variable.

The system is designed to permit any one channel to be maintained and when required, tested or calibrated during power operation without system trip. During such operation, the active parts of the system continue to meet the single-failure criterion. Exception is made in the one-of-two systems that are permitted to violate the single-failure criterion during channel bypass provided that acceptable reliability of operation can be otherwise demonstrated.

Operating bypasses that are removed automatically are restored automatically when permissive conditions are not met. Manual bypasses (located on the control board) that are immediately available to the operator are automatically reset or may be manually reestablished by the operator. Manual bypasses that are not automatically reset are designed to permit administrative control over their use. In all cases, there is continuous indication in the control room if the trip function of some part of the system has been bypassed or taken out of service.

7.1.2.2.2.3 Control of Protective Actions

The protection system is designed so that once initiated, a protective action will go to completion. The return of the plant to MODES 1 and 2 will require deliberate operator action.

Administrative control of the means of manually bypassing a channel or protective function is provided by controlling access to the control room and areas where a bypass can be affected.

Where multiple setpoints have been designed into the Ginna Station protection system, the design is in accordance with the other criteria of this standard. Means are provided for manual initiation of the protective system action. Failures in the automatic system do not prevent the manual actuation. The manual actuation requires the operation of a minimum of equipment.

Access to setpoint adjustment, calibration, and test points are designed to be under administrative control.

All protective actions are indicated and identified down to the channel level. Also, each is designed to provide the operator with accurate, complete, and timely information pertinent to its own status.

REFERENCES FOR SECTION 7.1

1. T. W. T. Burnett, Reactor Protection System Diversity in Westinghouse Pressurized Water Reactors, WCAP-7306, Westinghouse Corporation, April 1969.

2. Rochester Gas and Electric Corporation, Technical Supplement Accompanying Application for Full-Term Operating License, August 1972.

3. Generic Letter 96-01, Testing of Safety-Related Logic Circuits, dated January 10, 1996.

4. Letter from R. C. Mecredy, RG&E, to A. R. Johnson, NRC, Subject: Response to Generic Letter 96-01, dated April 18, 1996.

5. LER 96-005, Subject: Deficient Procedures for Testing of Safety-Related Logic Circuits, Identified Using Criteria of NRC Generic Letter 96-01, Resulted in Condition Prohibited by Technical Specifications, dated June 17, 1996.

6. Letter from R. C. Mecredy, RG&E, to G. S. Vissing, NRC, Subject: Notification of Completion of Requested Actions for 1996, Testing of Safety-Related Logic Circuits, dated December 19, 1997.

7. Letter from G. S. Vissing, NRC, to R. C. Mecredy, RG&E, Subject: Completion of Licensing Action for Generic Letter 96-01, "Testing of Safety-Related Logic Circuits", dated January 14, 1998.

7.2 REACTOR TRIP SYSTEM (RTS)

7.2.1 DESIGN BASES

7.2.1.1 Design Criteria

The following design criteria were used during the licensing of Ginna Station. They represent the Atomic Industrial Forum (AIF) version of proposed criteria issued by the AEC for comment on July 10, 1967 (see Section 3.1.1). Conformance with 1972 General Design Criteria of 10 CFR 50, Appendix A, is discussed in Section 3.1.2. The criteria discussed in Section 3.1.2 as they apply to the Reactor Trip System (RTS) include 2, 4, 13, 19, 20, 21, 22, 23, 24, 25, and 29. Conformance with IEEE 279-1971 is discussed in Section 7.1.2.

7.2.1.1.1 Fuel Damage Limits

CRITERION: Core protection systems, together with associated equipment, shall be designed to prevent or to suppress conditions that could result in exceeding acceptable fuel damage limits (AIF-GDC 14).

The Reactor Trip System (RTS) is designed to trip the reactor, when necessary, to prevent or limit fission product release from the core.

The reactor possesses high-speed Westinghouse magnetic-type control rod drive mechanisms. The reactor internal components, fuel assemblies, control rod assemblies, and unlatching mechanisms for the drive system components are designed as Seismic Category I equipment.

Two reactor trip breakers are provided to interrupt power to the control rod drive mechanisms. The breaker main contacts are connected in series with the power supply to the mechanism coils. The trip breakers are opened by the trip devices described in Section 7.2.2.1.5. Each protection channel actuates two separate trip logic trains, one for each reactor trip breaker. The electrical state of the devices providing signals to the trip breakers causes these breakers to trip in the event of power loss. Opening either trip breaker interrupts power to the magnetic latch mechanisms on each control rod drive, causing them to release the rods and allowing the rods to insert by gravity into the core. The reactor shutdown function of the rods is completely independent of the normal control functions because the trip breakers completely interrupt the power supply to the rod mechanisms and thereby negate any possibility of response to control signals. The control rods must be energized to remain withdrawn from the core. An automatic reactor trip occurs on loss of power to the control rods. All components that are required to perform the reactor trip function are classified as safety-related equipment

The Reactor Trip System (RTS) receives, from plant instrumentation, signals that are indicative of an approach to an unsafe operating condition, actuates alarms, prevents control rod motion, initiates load runback, and/or opens the reactor trip breakers, depending on the severity of the condition.

The basic reactor trip philosophy is to define a region of power and coolant temperature conditions allowed by the primary trip functions, the overpower delta T trip, the overtemperature delta T trip, and the nuclear overpower trip. The allowable operating region within these trip

settings is provided to prevent any combination of power, temperature, and pressure that could result in a departure from nucleate boiling with all reactor coolant pumps in operation. Additional trip functions such as a high pressurizer pressure trip, low pressurizer pressure trip, high pressurizer water level trip, loss-of-flow trip, steam generator low-low water level trip, turbine trip, safety injection trip, nuclear source and intermediate range trip, and manual trip are provided to back up the primary trip functions for specific accident conditions and mechanical failures.

A rod stop is initiated by a dropped rod signal to provide additional core protection. The dropped rod is indicated by individual rod position indicators and by a rapid flux decrease on any of the power range nuclear channels.

Rod stops from nuclear overpower, overpower delta T, overtemperature delta T, and T_{AVG} deviation are provided to prevent abnormal power conditions which could result from excessive control rod withdrawal initiated by a malfunction of the reactor control system or by operator violation of administrative procedures.

7.2.1.1.2 Reliability and Testability

CRITERION: Protection systems shall be designed for high functional reliability and inservice testability necessary to avoid undue risk to the health and safety of the public (AIF-GDC 19).

The reactor uses a higher speed version of the Westinghouse magnetic-type control rod drive mechanisms (CRDM) used in the San Onofre and Connecticut Yankee plants. The replacement control rod drive mechanisms (CRDM) provided by PCR 2001-0042 are Westinghouse design, manufactured by Framatome, Jeumont Plant. Upon a loss of power to the coils, the lead screws are released, allowing the control rods to fall by gravity into the core.

The reactor internals, fuel assemblies, rod cluster control assemblies, and drive system components (as required for trip) are designed as Seismic Category I equipment. The rod cluster control assemblies are fully guided through the fuel assembly for the maximum travel of the control rod into the guide tube. Furthermore, the rod cluster control assemblies are never fully withdrawn from their guide thimbles in the fuel assembly. Due to this and the flexibility designed into the rod cluster control assemblies, abnormal loadings and misalignments can be sustained without impairing operation of the rod cluster control assemblies.

The rod cluster control rod guide system throughout its length is locked together with pins, bolts and welds to ensure against misalignments which might impair control rod movement under normal operating conditions and credible accident conditions.

All reactor protection channels are supplied with sufficient redundancy to provide the capability for channel calibration and test at power. Bypass removal of one trip circuit is accomplished by placing that circuit in a half-tripped mode; i.e., a two-out-of-three circuit becomes a one-out-of-two circuit. Testing does not trip the system unless a trip condition exists in another channel.

Reliability and independence is obtained by redundancy within each tripping function. In a two-out-of-three circuit, for example, the three channels are equipped with separate primary sensors. Each channel is continuously fed from its own independent electrical sources. Failure to deenergize a channel when required would be a mode of malfunction that would affect only that channel. The trip signal furnished by the two remaining channels would be unimpaired in this event.

Routing and separation standards applicable to existing cables are those that were invoked at the time of cable installation. For more information, see Section 8.3.1.4.

7.2.1.1.3 Redundancy and Independence

CRITERION: Redundancy and independence designed into protection systems shall be sufficient to ensure that no single failure or removal from service of any component or channel of such a system will result in loss of the protection function. The redundancy provided shall include, as a minimum, two channels of protection for each protection function to be served (AIF-GDC 20).

Two reactor trip breakers are provided to interrupt power to the control rod drive mechanisms. The breaker main contacts are connected in series with the power supply to the mechanism coils. Opening either breaker interrupts power to the magnetic latch mechanism on each control rod drive, causing them to release the rods to fall by gravity into the core. Each breaker is opened through an undervoltage coil. Each protection channel actuates two separate trip logic trains, one for each reactor trip breaker undervoltage trip coil. The protection system is thus inherently safe in the event of a loss of rod control power.

The coincident trip philosophy is carried out to provide a safe and reliable system since a single failure will not defeat the function of a redundant channel and will also not cause a spurious plant trip. Channel independence is carried throughout the system extending from the sensor to the relay providing the logic. In most cases, the safety and control functions when combined are combined only at the sensor (and power supply). Both functions are fully isolated in the remaining part of the channel, control being derived from the primary safety signal path through an isolation amplifier. As such, a failure in the control circuitry does not affect the safety channels. This approach is used for pressurizer pressure and water level channels, steam-generator water level, T_{AVG} and delta T channels, steam flow, and nuclear power range channels.

The power supplies to the channels are fed from four instrument buses. Two of the buses are supplied by constant voltage transformers and two are supplied by inverters.

Routing and separation standards applicable to existing cables are those that were invoked at the time of cable installation. For more information, see Section 8.3.1.4.

7.2.1.1.4 Effects of Adverse Conditions

CRITERION: The effects of adverse conditions to which redundant channels or protection systems might be exposed in common, either under normal conditions or those

of an accident, shall not result in loss of the protection function or shall be tolerable on some other basis (AIF-GDC 23).

The components of the protection system are qualified such that the mechanical and thermal adverse environment resulting from any emergency situations during which the components are required to function does not prevent accomplishing their safety function.

7.2.1.1.5 Testing While In Operation

CRITERION: Means shall be included for suitable testing of the active components of protection systems while the reactor is in operation to determine if failure or loss of redundancy has occurred (AIF-GDC 25).

Each protection channel in service at power is capable of being calibrated and tripped independently by simulated signals for test purposes to verify its operation. This includes checking through to the trip breakers which necessarily involves the trip logic. Thus, the operability of each trip channel can be determined conveniently and without ambiguity.

7.2.1.1.6 Fail Safe Design

CRITERION: The protection systems shall be designed to fail into a safe state or into a state established as tolerable on a defined basis if conditions such as disconnection of the systems, loss of energy (e.g., electrical power, instrument air), or adverse environments (e.g., extreme heat or cold, fire, steam, or water) are experienced (AIF-GDC 26).

Each reactor trip channel is designed so that trip occurs when the channel is deenergized; an open circuit or loss of channel power therefore causes the system to go into its trip mode. In a two-out-of-three circuit, the three channels are equipped with separate primary sensors, and each channel is energized from independent electrical buses. Failure to deenergize when required is a mode of malfunction that affects only one channel. The trip signal furnished by the two remaining channels is unimpaired in this event.

Reactor trip is implemented by interrupting power to the magnetic latch mechanisms on each drive, allowing the rod clusters to insert by gravity. The protection system is thus inherently safe in the event of a loss of power.

7.2.1.1.7 Single Failure Criterion

CRITERION: The Reactor Trip System (RTS) shall be capable of protection against any single malfunction of the reactivity control system, such as unplanned continuous withdrawal (not ejection or dropout) of a control rod, by limiting reactivity transients to avoid exceeding acceptable fuel damage limits (AIF-GDC 31).

Reactor shutdown with rods is completely independent of the normal control functions since the trip breakers completely interrupt the power to the rod mechanisms regardless of existing control signals. Details of the effects of continuous withdrawal of a rod cluster control assembly and of continuous deboration are described in Section 7.7 and Section 9.3.4.

7.2.1.2 Seismic Design

The seismic design for Class 1E electrical equipment was analyzed during the conduct of the Systematic Evaluation Program (SEP) Topic III-6, "Seismic Considerations." This evaluation was based on a zero-period ground acceleration of 0.2g. As described in NUREG/CR-1821, "Seismic Review of the R. E. Ginna Nuclear Power Plant as Part of the SEP," floor response spectra were generated for all Ginna Station structures/levels and the equipment evaluated for potential effects. The review concluded that, for the most part, electrical equipment would withstand seismic forces. Upgrades for certain equipment such as the battery racks, main control board panels, and some equipment anchorages were performed as part of the SEP. (See Section 3.10.)

7.2.1.3 Operating Environment

The protective channels are designed to perform their function when subjected to the most adverse environmental conditions expected when the protective function is required and to prevent loss of function resulting from environmental conditions anticipated during their lifetimes.

Type test data or reasonable engineering extrapolation based on test data are available to verify that Environmentally Qualified equipment, which must operate to provide protective system action, will meet on a continuing basis the functional requirements under the ambient conditions anticipated when the function is required.

The operating environment for equipment within the containment will normally be controlled to 120°F or lower. The Reactor Trip System (RTS) instrumentation within the containment is designed for continuous operation in an environment of 120°F, atmospheric pressure and 50% (nominal) relative humidity. The portions of the Reactor Trip System (RTS) and Engineered Safety Features Actuation System (ESFAS) required to perform safety functions in a harsh postaccident environment are qualified to operate in accordance with the requirements of 10 CFR 50.49, as described in Section 3.11.

Postulated accident conditions at the location of the trip breakers are relatively mild (212°F, 0.25 psig, 100% relative humidity). Trip breakers are environmentally qualified since they perform their function within seconds.

They (Reactor Trip Breakers) are located two floors from the postulated pipe crack and long-term failure could not cause control rod withdrawal from the core.

The environment for the neutron detectors is limited to 150°F with a relative humidity of less than 90%. The detectors are designed for continuous operation in an environment of 180°F, 100% relative humidity, and 100 psig. The 100% humidity value assumes that the detector connections, in the instrument wells, are covered with nuclear grade (Raychem) sleeving.

Protective equipment outside of the containment and inside the control room is designed for continuous operation in an ambient temperature of 75°F and 50% relative humidity. The control room is maintained at the personnel comfort level; however, protective equipment in the control room operates within design tolerance up to a temperature of 104°F.

7.2.2 DESCRIPTION

The Reactor Trip System (RTS) automatically trips the reactor to protect against reactor coolant system damage caused by high system pressure and to protect the reactor core against fuel rod cladding damage caused by a departure from nucleate boiling.

The basic reactor tripping philosophy is to define a region of power and coolant temperature and pressure conditions allowed by the primary trip functions (overpower delta T trip, overtemperature delta T trip, and nuclear overpower trip). The allowable operating region within these trip settings is provided to prevent any combination of power, temperature, and pressure that would result in a departure from nucleate boiling with all reactor coolant pumps in operation.

Additional trip functions such as a high pressurizer pressure trip, low pressurizer pressure trip, high pressurizer water level trip, loss-of-flow trip, steam-generator low-low water level trip, turbine trip, safety injection trip, nuclear source and intermediate range trips, and manual trip are provided to back up the primary trip functions for specific accident conditions and mechanical failures.

The core protective systems in conjunction with inherent plant characteristics are designed to prevent anticipated abnormal conditions from causing fuel damage exceeding limits established in Chapter 4, or primary system damage exceeding effects established in Chapter 5.

Figure 7.2-1 is a block diagram of the Reactor Trip System (RTS).

The curves of Technical Specifications Figure 2.1.1-1 represent the loci of points of thermal power, coolant system pressure, and average temperature for which the minimum departure from nucleate boiling ratio, as defined in the Technical Specifications, is satisfied. The area of safe operation is below these lines.

Adequate margins exist between the worst steady-state operating point (including all temperature, calorimetric, and pressure errors) and required trip points to preclude a spurious plant trip during design transients.

Where operating requirements necessitate automatic or manual bypass of a protective function, the design is such that the bypass is removed automatically whenever permissive conditions are not met. Devices used to achieve automatic removal of the bypass of a protective function are part of the protection system and are designed in accordance with the criteria discussed in Section 7.2.1.

The protection system is so designed that, once initiated, a protective action goes to completion. Return to MODES 1 and 2 requires administrative action by the operator.

Where it is necessary to change to a more restrictive trip setting to provide adequate protection for a particular mode of operation or set of operating conditions, the design provides positive means of ensuring that the more restrictive trip setting is used. The devices used to prevent improper use of less restrictive trip settings are considered a part of the protective system and are designed in accordance with the other provisions of these criteria.

Interlocks and administrative procedures required to limit the consequences of fault conditions other than those specified as limits for the protective function comply with the protection system criteria.

Interlocking functions of the Reactor Trip System (RTS) inhibit control rod withdrawal on the occurrence of a specified parameter reaching a value before the value at which reactor trip is initiated.

The power supply for the entire protection system originates from four independent sources, one for each of the four channels. These sources are the 120-V ac instrument power buses of the electrical system.

7.2.2.1 Logic Train

The nuclear and process instrumentation systems send trip signals to the logic trains. There are two complete and independent sets of logic circuits to the Reactor Trip System (RTS) cabinets. Each set constitutes a logic train. When the setpoint values are sensed, a trip signal is sent to the protection cabinets. If a reactor trip is required, the protection cabinets will send a signal to the reactor trip breakers. Tripping of these breakers will remove power from the control rod drive mechanisms allowing the rods to drop into the reactor core. Additionally, the protection cabinets will actuate any required safeguards devices and also provide appropriate permissive signals to the logic trains to allow automatic or manually initiated interlocks and blocks.

The analog channels provide the input portion to the Reactor Trip System (RTS). The typical analog channel consists of a sensor, power supplies, and the process or nuclear instrumentation. The process and nuclear instrumentation contain signal conditioning circuits, controllers, signal comparators, and isolation amplifiers. The remainder of the Reactor Trip System (RTS) is composed of protection cabinets, relay logic cabinets, test panels, trip breakers, undervoltage coils, and shunt trip coils.

Separation of the redundant analog channels originates at the process sensors and continues through the field wiring and containment penetrations to the protection cabinets. Separation of field wiring is achieved by using separate wireways, cable trays, conduit runs, and containment penetrations for each redundant channel. At the protection cabinets, the components of the four channels are located in separate panels. Furthermore, power for each channel is supplied from separate buses.

Routing and separation standards applicable to existing cables are those that were invoked at the time of cable installation. For more information, see Section 8.3.1.4.

7.2.2.1.1 Sensors

The sensors measure plant process parameters such as pressure, temperature, levels, power flow, bus voltage, and frequency. They convert the measurement into an electrical signal proportional to that parameter when necessary. Typical sensors are resistance temperature detectors, pressure cells, differential pressure cells, ion chambers, and undervoltage and underfrequency devices.

7.2.2.1.2 Process and Nuclear Instrumentation

The process instrumentation receives the process signal from the detector and processes the received signal in one or more ways. These ways may include amplification, integration, differentiation, summation, exponential, square root, or lead-lag type functions. After processing, the signal is used for indication, control, and protection of the reactor. Control and indication circuits are electrically isolated from the process instrument output via an isolation amplifier, while the protection circuit connects directly to the output. This electrical isolation prevents feedback effects from grounds, opens, or shorts in the control circuitry from affecting the protection circuitry, thereby maintaining the reliability of the Reactor Trip System (RTS).

7.2.2.1.3 Protection Cabinets

Located at the south wall of the control room, there are four protection cabinets, one for each input from the respective instrumentation channel. They contain the protection bistables for both the reactor trip and safeguards actuation functions as well as the bistables for the permissive functions.

7.2.2.1.4 Logic Relay Cabinets

The logic relay cabinets are divided into two groups of cabinets, the reactor trip logic cabinets and the safeguards actuation logic cabinets. The reactor trip logic cabinets consist of four separate cabinets for each train of protection with inputs from each of the four protection cabinets. Each protection cabinet sends its signal to two trip logic cabinets, one cabinet in each protection train. The front section of the reactor trip logic cabinet contains the logic, trip, and permissive relays. The rear section contains test relays that are used only during testing (see Section 7.2.4). The incoming protection signal to the logic cabinet passes through a set of test relay contacts. These contacts are shut during normal at power operation. A test relay actuates these contacts in the respective logic cabinet and is controlled from the logic test panels.

The protection signal supplies power directly to a logic relay, maintaining it energized during MODES 1 and 2. Should the specified setpoint value be detected by a channel, the protection signal would deenergize the logic relay. The logic relay contacts are wired in the proper logic matrix. This logic matrix contains the logic relay contacts from each channel's respective logic cabinet. Each logic matrix represents a specific trip function and two or more are normally wired in series. The logic matrices are also in series with one of eight trip relays and their power supplies. The trip relays are divided equally among the four cabinets in one train. When a reactor trip is needed, the logic relays deenergize, opening their contacts, which in turn deenergize the trip relays.

The permissive logic relays are arranged in the same fashion as the reactor trip logic relays. They are also controlled by bistables in the protection cabinets. When the permissive logic relays energize, their contacts shut. This allows a given permissive function to occur automatically or by manual operator action.

7.2.2.1.5 Trip Breakers

The reactor trip breakers are designed to quickly interrupt power supplied from the rod control motor-generator sets to the control rod drive mechanisms. Each breaker has the capability to insert a bypass breaker that allows for the testing of each main trip breaker. Each reactor trip breaker and bypass breaker has an undervoltage trip coil and shunt trip coil that trip the breaker through a mechanical linkage. Test switches can be used to independently verify the operation of both the undervoltage trip assembly and the shunt trip assembly. Undervoltage coils deenergize to trip the breaker, while shunt trip coils energize to cause a breaker trip. Undervoltage and shunt trip coils in each train are powered from the Class 1E, 125-V-dc battery system associated with that train.

Each undervoltage coil is connected to its 125-V-dc power supply in series with all the trip relay contacts in the reactor trip logic cabinets and the manual trip switches on the main control board. As long as a complete electrical flow path is present, the undervoltage coils remain energized holding the trip breakers shut. Once a trip condition is detected, the respective trip relay will deenergize, thus opening its contacts and causing the 125-V-dc power to be interrupted to the undervoltage coils.

In order to minimize the likelihood of a failure of a breaker to trip, the two reactor trip breakers use a reverse tripping logic to automatically activate the existing trip coil concurrent with the deenergization of the undervoltage coil. This results in two simultaneous mechanical forces acting on the tripper bar instead of one.

Each reactor trip breaker (but not the bypass breaker) uses a reverse tripping logic to automatically energize the shunt trip coil concurrent with deenergization of the undervoltage coil. Trip relays, which form the logic for the undervoltage coils, have both "a" and "b" type contacts. The "b" contacts close when the trip relays deenergize while the "a" contacts open. The "b" contacts are used to form the reverse logic that energizes the shunt trip coils. The reactor trip breaker shunt trip coil is energized by the same Reactor Trip System (RTS) signals that cause the undervoltage trip coil to deenergize. The one exception is undervoltage trip below 8% power and 500°F. This trip is a backup to administrative controls and operates only on the undervoltage coil. This trip is only used when the plant is heating up or cooling down and therefore its inclusion in the reverse logic is not warranted. In this case the zirconium guide tube interlocks are used to trip each reactor trip breaker using the undervoltage trip assembly and the trip is not duplicated in the shunt trip coil logic.

In addition to the automatic control of the shunt trip coil on the reactor trip breaker, the shunt trip coils on the reactor trip breakers and the bypass breaker are controlled by the manual reactor trip switches.

A simplified electrical diagram of the undervoltage trip coil and shunt trip assembly is shown in Figure 7.2-20.

7.2.2.2 Reactor Trips

7.2.2.2.1 General

Rapid reactivity shutdown is provided by the insertion of control rod assemblies by gravity fall to compensate for fast reactivity effects, e.g., doppler and moderator temperature effects. Duplicate series-connected circuit breakers supply all power to the control rod drive mechanisms. The control rod drive mechanisms must be energized to remain withdrawn from the core. Automatic reactor trip occurs upon the loss of power to the control rod drives. The trip breakers are opened by any of several trip signals.

Certain reactor trip channels are automatically bypassed at low power where they are not required for safety and to enable convenient operation for conditions such as startup and shutdown. Nuclear source range and intermediate range trips, which are specifically provided for protection at low power or subcritical operation, are bypassed at power operation to prevent spurious reactor trip signals and to prevent the degradation of the detectors at power levels above 8%.

During power operation, a sufficiently rapid shutdown capability in the form of control rods is administratively maintained through the control rod insertion limit monitors (see Section 7.7). Administrative control requires that all shutdown rods be in the fully withdrawn position during power operation.

During the MODE 6 (Refueling) in 1981, zirconium guide tubes were installed in the fuel assemblies. The different thermal expansion rates of zirconium versus stainless steel raised a potential problem of interference which could lead to damage of the rod drive mechanisms if a cooldown were to occur with the control rod drives latched. To alleviate the problem an automatic interlock has been installed to ensure that the reactor trip breakers are open prior to cooling down.

Technical Specification Table 3.3.1-1 lists the requirements necessary to preserve the effectiveness of the reactor control and protection system.

The logic diagram for the reactor trip signals is shown in Drawings 33013-1353, Sheet 1 and 33013-1353, Sheet 2. Drawing 33013-1353, Sheet 1 provides the index of the symbols used in all the logic diagrams.

7.2.2.2.2 Manual Trip

A manual reactor trip is provided to permit the operators to trip the reactor. The manual actuating devices are independent of the automatic reactor trip circuitry and are not subject to failures that could make the automatic circuitry inoperable. The manual trip logic is shown in Drawing 33013-1353, Sheet 14.

7.2.2.2.3 High-Nuclear-Flux (Power Range) Trip

This circuit trips the reactor when two out of the four power range channels read above the trip setpoint. The low setting can be manually bypassed (permissive P-10) when two out of the four power range channels read above approximately 8% power. Three out of the four

channels below 8% automatically reinstate the trip. The high setting is always active. The high-nuclear-flux (power range) trip logic is shown in Drawing 33013-1353, Sheet 10.

7.2.2.2.4 High-Nuclear-Flux (Intermediate Range) Trip

This circuit trips the reactor when one out of the two intermediate range channels reads above the trip setpoint. This trip can be manually bypassed if two-out-of-four power range channels are above approximately 8%. Three-out-of-four channels below this value automatically reinstate the trip. The intermediate channels (including detectors) are separate from the power range channels in this plant design. The high-nuclear-flux (intermediate range) trip logic is shown in Drawing 33013-1353, Sheet 10.

7.2.2.2.5 High-Nuclear-Flux (Source Range) Trip

This circuit trips the reactor when one out of the two source range channels reads above the trip setpoint. It can be manually bypassed when one-out-of-two intermediate range channels reads above the source range cutoff value and is automatically reinstated when both intermediate range channels decrease below this value. This trip is also bypassed by two-out-of-four high power range signals.

The trip point is set between the source range cutoff power level and the maximum source range power level.

The high-nuclear-flux (source range) trip logic is shown in Drawing 33013-1353, Sheet 10.

7.2.2.2.6 Overtemperature Delta T Trip

The purpose of this trip is to protect the core against departure from nucleate boiling. In the protection system, the indicated loop delta T is used as a measure of reactor power and is compared with a setpoint that is automatically varied, depending on T_{AVG}, pressurizer pressure, and axial flux difference. The circuit trips the reactor on coincidence of two out of the four signals, with two channels per loop.

The overtemperature delta T trip logic is shown in Drawing 33013-1353, Sheet 14.

7.2.2.2.7 Overpower Delta T Trip

The purpose of this trip is to protect against excessive power (fuel rod rating protection) and subsequent fuel rod failure. The indicated delta T is used as a measure of reactor power and is compared with a setpoint that is automatically varied depending on T_{AVG} This circuit trips the reactor on coincidence of two out of the four signals, with two channels per loop.

The overpower delta T trip logic is shown in Drawing 33013-1353, Sheet 14.

7.2.2.2.8 Low Pressurizer Pressure Trip

The low pressurizer pressure trip is designed to protect against departure from nucleate boiling, and also serves to limit the range of the overtemperature delta T trip by establishing a lower limit on reactor coolant pressure. Four pressurizer pressure channels are used in a two-out-of-four logic. The low pressurizer pressure trip is automatically bypassed below 8%

power since the protection afforded by the trip is not essential at this low power level due to the lower reactor coolant system temperature. The low pressurizer pressure trip logic is shown in Drawing 33013-1353, Sheet 12.

7.2.2.2.9 High Pressurizer Pressure Trip

The high pressurizer pressure trip is designed to protect the reactor coolant system from an overpressure condition. There are three pressure channels sensing pressure in the pressurizer and arranged in a two-out-of-three logic. The trip setting is above the Pressurizer Power Operated Relief Valves (PORV) setting to prevent an unnecessary reactor trip for those pressure increases that can be controlled by the valves. The trip, along with the Pressurizer Power Operated Relief Valves (PORV) and Main Steam Safety Valves (MSSV), prevents overpressurization. The high pressurizer pressure trip logic is shown in Drawing 33013-1353, Sheet 12.

7.2.2.2.10 High Pressurizer Water Level Trip

The high pressurizer level trip is provided as a backup to the high pressure trip. It is also used to prevent potential damage to the pressurizer safety valves and discharge piping which could be caused by water hammer if these valves lift to pass water instead of steam. Three high level channels are arranged in a two-out-of-three logic. The high pressurizer water level trip logic is shown in Drawing 33013-1353, Sheet 12.

7.2.2.2.11 Low Reactor Coolant Flow Trip

The low flow trips are provided to protect the core from departure from nucleate boiling following a loss-of-flow accident. The means of sensing a low flow condition are as follows:

1. Measured low flow in the reactor coolant piping.
2. Sensing an undervoltage condition on the reactor coolant pump buses.
3. Sensing an underfrequency condition on the reactor coolant pump buses.
4. Sensing reactor coolant pump circuit breakers open.

The low flow trip signal is actuated by the coincidence of two-out-of-three signals for each reactor coolant loop. The loss of flow in either loop causes a reactor trip.

Below the permissive power setpoint P-8, loss of flow in both loops would cause a reactor trip. This permits an orderly plant shutdown under administrative control following a single loop loss of flow during low power operation. Since the plant will not be maintained in operation above permissive power setting P-7 without both loops in service, independent accidents simultaneous with a single loop loss of flow at low power are not considered in the protection system design. The loss of reactor coolant flow trip logic is shown in Drawing 33013-1353, Sheet 14.

The undervoltage on the reactor coolant pump buses trip is provided for protection following a complete loss of power to the reactor coolant pumps. A voltage condition below 3150 volts, as sensed by undervoltage relays (one-out-of-two logic) on both reactor coolant pump buses,

will directly trip the reactor to prevent departure from nucleate boiling. This trip is bypassed below 8% power by permissive P-7.

The underfrequency on the pump power supply trip provides reactor protection following a major grid frequency disturbance. If an underfrequency condition below 57.7 Hz (one-out-of-two logic) exists on both reactor coolant pump buses, all reactor coolant pump breakers and the reactor are tripped. This is done because an underfrequency condition will slow down the pumps thereby reducing their coastdown time following a pump trip.

The undervoltage and underfrequency trip logic is shown in Drawing 33013-1353, Sheet 4.

7.2.2.2.12 Safety Injection System Actuation Trip

A reactor trip occurs on the actuation of the safety injection system. The means of actuating the safety injection system trips are described in Section 7.3.2.

7.2.2.2.13 Turbine Trip/Reactor Trip

Turbine trip causing a reactor trip is provided to anticipate probable plant transients and to avoid the resulting thermal transients. If the reactor were not tripped by the turbine trip, the overtemperature delta T or high pressure trip would prevent reactor safety limits from being exceeded. By utilizing this trip, undesirable excursions are prevented rather than terminated.

The trip is sensed by a decrease in emergency trip system oil pressure or all stop valves shut. Three switches are mounted on the emergency trip oil header and their outputs are tied together in a two-out-of-three logic. This logic will initiate a reactor trip (auto-stop oil pressure less than 45 psig) provided the reactor is operating above 50% power as sensed by permissive P-9. It is not necessary to trip the reactor if it is operating below 50% power since rod control in conjunction with steam dump can accomodate a 50% load rejection without a reactor trip (Section 10.7.1). Turbine trip leading to reactor trip logic is shown in Drawing 33013-1353, Sheet 3.

7.2.2.2.14 Low-Low Steam-Generator Water Level Trip

The purpose of this trip is to protect the steam generators for the case of a sustained steam/feedwater flow mismatch. The trip is actuated on two-out-of-three low-low water level signals in either steam generator. The trip logic is shown in Drawing 33013-1353, Sheet 13.

7.2.2.3 Interlocks

A number of reactor trips applicable to power range operation are automatically bypassed to permit reactor startup and low power operation. The following trip functions are blocked by a coincidence of three-out-of-four power range nuclear flux channels reading less than 8% power and one-out-of-two low turbine load (turbine impulse chamber pressure) signals:

A. Low reactor coolant flow (both loops).

B. Reactor coolant pump breaker trip (both loops).

C. Turbine trip with P-9 permissive present.

D. Undervoltage.

E. Underfrequency.

F. Low pressurizer pressure.

Similarly, the high-nuclear-flux source range and high-nuclear-flux intermediate range trips applicable to startup and low power operation are bypassed during power operation.

7.2.2.4 Permissive Circuits

Various permissive signals are generated throughout the plant for the purpose of providing both automatically and manually initiated interlocks and bypass circuits. Actuation of the permissives is indicated on the permissive status panel. The permissives associated with the Reactor Trip System (RTS) are listed in Table 7.2-2 and are described below. The logic diagram is shown in Drawing 33013-1353, Sheet 11.

7.2.2.4.1 P-1 Permissive

The P-1 permissive, rod stop on overpower, blocks automatic and manual rod withdrawal. The overpower rod stops are initiated by one-out-of-four high nuclear flux of 103%; one-out-of-two high flux at 20% current equivalent power; two-out-of-four high overtemperature delta T at 3% of rated loop ΔT below trip setpoints; and high overpower delta T at 3% of rated loop ΔT below the trip setpoint with two-outof-four logic. High overpower delta T and overtemperature delta T will also initiate a turbine runback at 200%/min for 1.5 sec every 30 sec.

7.2.2.4.2 P-2 Permissive

The P-2 permissive blocks automatic rod withdrawal at low power. It is initiated by one-out-of-one first stage turbine pressure less than 12.8% turbine power.

7.2.2.4.3 P-3 Permissive

The P-3 permissive blocks automatic rod withdrawal on a rod drop signal. A rod drop signal is initiated by a rapid decrease of nuclear flux of 5%. Logic of one-out-of-four power-range detectors will satisfy this permissive. Additionally a rod drop signal is initiated if a rod is indicating 0 steps when any rod in its bank or any subsequent programmed bank indicates 24 steps or greater.

7.2.2.4.4 P-4 Permissive

The P-4 permissive arms the steam dump system for operation upon sudden decrease in turbine load actuated on one-out-of-one first stage turbine pressure decrease equivalent to a 10% full power decrease.

7.2.2.4.5 P-6 Permissive

The P-6 permissive permits bypassing the source range channel high flux trip during an approach to power. It is derived from a bistable circuit of the intermediate range channels. The bistable circuit will initiate the permissive if either intermediate range channel is above a power level of 1×10^{-10} amp and illuminates the "Power Above P-6" light. In order to block the source range high flux trip, however, two buttons must be depressed after the permissive

is effective. One is supplied for each logic train. After both buttons are depressed, the "Source Range Trip Blocked" light will be illuminated. If both intermediate range channels drop below 5×10^{-11} amp, the permissive will automatically be defeated. The permissive may be manually defeated if power is below P-10 by simultaneously depressing both defeat pushbuttons. Either method will reinstate the trip capability.

7.2.2.4.6 P-7 Permissive

The P-7 permissive is used to bypass the low pressurizer pressure reactor trips during low power or startup operation. It is also used to bypass reactor coolant low flow trips. It is derived from a bistable circuit indicating less than 8.5% power as measured by both first stage turbine pressure (two-out-of-two) and power range (two-out-of-four). The power range input is supplied by the P-10 permissive.

7.2.2.4.7 P-8 Permissive

The P-8 permissive allows the loss of flow trip logic to change so that a loss of a single loop below P-8 setpoint will not cause a reactor trip. P-8 is set at 25% reactor power as sensed by two-out-of-four power range instruments of the nuclear instrumentation system.

7.2.2.4.8 P-9 Permissive

The P-9 permissive prevents a reactor trip when the turbine trips if nuclear power is below 50%. The permissive has two-out-of-four logics and it also allows for the unnecessary reactor trip when the steam dump is available.

7.2.2.4.9 P-10 Permissive

The P-10 permissive is used to bypass the intermediate range channel and low-level power range channel trips during an approach to power. It is also used as a backup to P-6, to block out the source range instrumentation, and in the development of P-7. It is derived from a bistable circuit indicating greater than 8% power as measured by the power range channels (two-out-of-four). In order to block the intermediate range high flux and low power high flux trips, two buttons for each trip must be depressed on the control panel. If power falls below 6% on three or four channels, the nuclear instrument trips will be automatically unblocked.

7.2.2.5 Alarms

Alarms will also be used to alert the operator to deviation from normal operating conditions so that, where possible, the operator may take corrective action to avoid a reactor trip. Further, actuation of any rod stop or trip of any reactor trip channel will actuate an alarm.

Any of the following conditions actuates an alarm:

A. Reactor trip (first-out annunciator).

B. Trip of any reactor trip channel.

C. Actuation of any permissive circuit (get a light) or override.

D. Significant deviation of any major control variable (pressure, T_{AVG}, pressurizer water level, and steam-generator water level).

E. Incompleted administrative test procedures in any reactor trip channel (and control channel, where feasible).

7.2.2.6 Design Features

7.2.2.6.1 Isolation of Redundant Protection Channels

7.2.2.6.1.1 Channelized Design

The Reactor Trip System (RTS) is designed on a channelized basis to achieve isolation between redundant protection channels. The channelized design, as applied to the analog as well as the logic portions of the protection system, is illustrated by Figure 7.2-12 and is discussed below. Although shown for four-channel redundancy, the design is applicable to two- and three-channel redundancy. Figure 7.2-12 shows only the undervoltage coil associated with each trip breaker; a similar circuit for each breaker, consisting of a dc power feed, relay contacts, and a shunt trip coil is omitted for clarity.

Isolation of redundant analog channels originates at the process sensors and continues back through the field wiring and containment penetrations to the analog protection racks. Physical separation in cable trays, conduit, and containment penetrations is used to the maximum practical extent to achieve isolation. Analog equipment is isolated by locating redundant components in different protection racks.

Routing and separation standards applicable to existing cables are those that were invoked at the time of cable installation. For more information, see Section 8.3.1.4.

The power supplies to the channels are fed from four instrument buses. Two of the buses are supplied by constant voltage transformers, and two are supplied by inverters. Each channel is energized from a separate ac power feed. Each reactor trip circuit is designed so that a trip occurs when the circuit is deenergized. An open circuit or the loss of channel power, therefore, causes the system to go into its trip mode. Reliability and independence are obtained by redundancy within each tripping function. In a two-out-of-three circuit, the three channels are equipped with separate primary sensors and each channel is energized from an independent electrical bus. A single failure may be applied in which a channel fails to deenergize when required; however, such a malfunction can affect only one channel. The trip signal furnished by the two remaining channels is unimpaired in this event.

All reactor protection channels are supplied with sufficient redundancy to provide the capability for channel calibration and testing at power. Bypass removal of one trip circuit is accomplished by placing that circuit in a half-tripped mode; that is, a two-out-of-three circuit becomes a one-out-of-two circuit. Testing does not trip the system unless a trip condition concurrently exists in a redundant channel.

Certain reactor trip channels are automatically bypassed at low power, to allow for such conditions as startup and shutdown, and where they are not required for safety. Nuclear source range and intermediate range trips, which specifically provide protection at low power or sub-

critical operation, are bypassed at power operation to prevent spurious reactor trip signals and to improve reliability.

7.2.2.6.1.2 Separation

The reactor trip bistables are mounted in the protection racks and are the final operational component in an analog protection channel. Each bistable drives two logic relays (C and D). The contacts from the C relays are interconnected to form the required actuation logic for trip breaker No. 1 through dc power feed No. 1. The transition from channel identity to logic identity is made at the logic relay coil/relay contact interface. As such, there is both electrical and physical separation between the analog and the logic portions of the protection system. The above logic network is duplicated for trip breaker No. 2 using dc power feed No. 2 and the contacts from the D relays. Therefore, the two redundant reactor trip logic channels are physically separated and electrically isolated from one another. Overall, the protection system is comprised of identifiable channels that are physically, electrically, and functionally separated and isolated from one another to the extent practical.

Components, cabling, and panel wiring for reactor trip breaker undervoltage and shunt trip circuitry are grouped into two redundant trains and physically separated. Each of the two manual reactor trip switches activates undervoltage and shunt trips for both trains. Wiring to these switches is separated to the maximum extent possible in the main control board. Channel separation is maintained between the control wiring for the undervoltage trip coils and the shunt trip coils. A fault on any one control circuit will not degrade both redundant trains.

7.2.2.6.2 Channel Bypass or Removal from Operation

The system is designed to permit any one channel to be maintained, and when required, tested or calibrated during power operation without system trip. During such operation, the active parts of the system continue to meet the single-failure criterion.

Exception: "One-out-of-two" systems are permitted to violate the single-failure criterion during channel bypass provided that acceptable reliability of operation can be otherwise demonstrated.

7.2.2.6.3 Capability for Test and Calibration

The bistable portions of the protective system (e.g., relays and bistables) provide trip signals only after signals from analog portions of the system reach preset values. Capability is provided for calibrating and testing the performance of the bistable portion of protective channels and various combinations of the logic networks during reactor operation.

The analog portion of a protective channel (e.g., sensors and amplifiers) provides analog signals of reactor or plant parameters. The following means are provided to permit checking the analog portion of a protective channel during reactor operation:

A. Varying the monitored variable.

B. Introducing and varying a substitute transmitter signal.

C. Cross-checking between identical channels or between channels which bear a known relationship to each other and which have readouts available.

The design permits the administrative control of the means for manually bypassing channels or protective functions.

The design permits the administrative control of access to all trip settings, module calibration adjustments, test points, and signal injection points.

7.2.2.6.4 Information Readout and Indication of Bypass

The protective systems are designed to provide the operator with accurate, complete, and timely information pertinent to their own status and to plant safety. Indication is provided in the control room if the trip function of some part of the system has been administratively bypassed or taken out of service.

Trips are indicated and identified down to the channel level.

7.2.2.6.5 Physical Isolation

The physical arrangement of all elements associated with the protection system reduces the probability of a single physical event impairing the vital functions of the system.

System equipment is separated between instrument cabinets so as to reduce the probability of damage to the total system by some single event.

Wiring between vital elements of the system outside of equipment housing is routed and protected so as to maintain the true redundancy of the systems with respect to physical hazards.

The RG&E wire and cable routing for safety channels has been separated in general by the following means:

A. Redundant circuits run in separate conduits.

B. Redundant circuits run in separate cable trays.

C. Redundant circuits run in opposite sides of cable trays that have been partitioned with a metal barrier plate.

Routing and separation standards applicable to existing cables are those that were invoked at the time of cable installation. For more information, see Section 8.3.1.4.

7.2.2.6.6 Sensor Line Separation

Physical separation between redundant protection instrument sensing lines is generally achieved by providing 4 ft of separation for vertical runs and 18 in. for horizontal runs. Where physical separation could not be obtained due to space limitations or obstructions, protection has been achieved by barriers and/or enclosed sectional raceways. The barriers and/or raceways are made of heavy gauge metal.

7.2.2.6.7 Instrument Line Identification

The identification of electrical circuits, cables, conduits, and cable trays is generally accomplished as shown in the following list:

A. Individual wires are tagged with an oblong fiber tag at each wire end. This tag carries the wire number as listed in the wiring schedule sheets.

B. Individual cables are tagged with a round fiber tag attached to the cable close to the end of the cable outer sheath where it has been stripped back to expose the individual wires. This tag carries the cable number corresponding to the cable schedule sheet number.

C. Each conduit is tagged with a brass numbering check attached at each end of the conduit and at intermediate points in the run as specified in the conduit layout drawings.

D. Each cable tray is stenciled with a tag number at each end with the identifying number shown on the cable tray layout drawings.

E. Sensors in the protection channels are identified by tag numbers at the sensor location.

7.2.3 ANALYSIS

7.2.3.1 Reactor Trip System (RTS) and Departure From Nucleate Boiling

The following is a description of how the Reactor Trip System (RTS) prevents departure from nucleate boiling (DNB).

The plant variables affecting the DNB ratio (DNBR) are

- Thermal power.
- Coolant flow.
- Coolant temperature.
- Coolant pressure.
- Core power distribution (hot-channel factors).

7.2.3.2 Core Protection System

The basic overpower-overtemperature protection mentioned in conjunction with the power capability discussion consists of the delta T trip functions based on the differences between measurements of the hot-leg and cold-leg temperatures, which are proportional to core power.

The delta T trip functions are provided with a nuclear flux feedback to reflect a measure of power distribution. This will assist in preventing an adverse distribution which could lead to exceeding allowable core conditions. The overpower-overtemperature protection and the power distribution feedback are described below. (See Figures 7.2-14 and 7.2-15.)

7.2.3.2.1 Overpower Protection

In addition to the nuclear power range trips, a delta T trip is provided (two-out-of-four logic) to limit the maximum overpower. This trip is modified as described in Section 7.2.2.2.7.

In addition, a rod stop function and turbine runback function is provided in the form:

$\Delta T_{(rod\ stop)} = \Delta T_{(trip)}$ - constant

with a programmed turbine runback until $\Delta T < \Delta T_{(rod\ stop)}$

This function serves to maintain essentially a constant margin to trip and gives the operator the opportunity to make appropriate adjustments before a reactor trip occurs.

7.2.3.2.2 Overtemperature Protection

A second delta T trip (two-out-of-four logic) provides a trip which protects against departure from nucleate boiling. This trip is modified as described in Section 7.2.2.2.6.

Four long ion chamber pairs are provided and each one independently feeds a separate delta T trip channel. Thus, a single failure neither defeats the function nor causes a spurious trip. The axial flux difference penalty function is only in the direction of decreasing the trip setpoint; it cannot increase the setpoint.

If the difference between the top and bottom detectors exceeds a preset limit indicative of excess power generation in the upper or lower half of the core, a proportional signal is transmitted to the delta T trip to reduce its setpoint.

A similar rod stop and turbine runback function is provided as discussed in Section 7.2.3.2.1.

7.2.4 REACTOR TRIP SIGNAL TESTING

Provisions are made to manually place the output of the bistable in a tripped condition for "at power" testing of all portions of each trip circuit including the reactor trip breakers. Administrative procedure requires that the final element in a trip channel (required during power operation) is placed in the trip mode before that channel is taken out of service for repair or testing so that the single-failure criterion is met by the remaining channels.

Provision is made for the insertion of test signals in each analog loop. Verification of the test signal is made by station instruments at test points specifically provided for this purpose. This enables testing and calibration of meters and bistables. Transmitters and sensors are checked against each other and against precision readout equipment during normal power operation.

7.2.4.1 Analog Channel Testing

The basic elements comprising an analog protection channel are shown in Figure 7.2-16 and consist of a transmitter, power supply, bistable, bistable trip switch and proving lamp, test signal injection switch, test signal injection jack, and test point.

Each protection rack includes a test panel containing those switches, test jacks, and related equipment needed to test the channels contained in the rack. A hinged cover encloses the test panel. Opening the cover or placing the test-operate switch in the TEST position will initiate an alarm. These alarms are arranged on a rack basis to preclude entry to more than one redundant protection rack (or channel) at any time. The test panel cover is designed such that it

cannot be closed and the alarm cleared unless the test signal plugs (described below) are removed. Closing the test panel cover will mechanically return the test switches to the OPERATE position.

Administrative procedures require that the bistable in the channel under test be placed in the tripped mode prior to test. This places a proving lamp across the bistable output so that the bistable trip point can be checked during channel calibration. The bistable trip switches must be manually reset after completion of a test. Closing the test panel cover will not restore these switches to the untripped mode.

Administrative controls prevent the nuclear instrumentation source range and intermediate range protection channels from being disabled during periodic testing. Power range overpower protection cannot be disabled since this function is not affected by the testing of circuits. Administrative controls also prevent the power range dropped rod protection from being disabled by testing. In addition, the rod position system would provide indication and associated corrective actions for a dropped rod condition.

Actual channel calibration will consist of injecting a test signal from an external calibration signal source into the signal injection jack. Where applicable, the channel power supply will serve as a power source for the calibration source and permit verifying the output load capacity of the power supply. Test points are located in the analog channel and provide an independent means of measuring the calibration signal level.

7.2.4.2 Logic Channel Testing

7.2.4.2.1 Planned Tests

The trip logic channels for a typical two-out-of-three and two-out-of-four trip function are shown in Figure 7.2-17. The analog portions of these channels are shown in Figure 7.2-18. Each bistable drives two relays (A and B for level and C and D for pressure). Contacts from the A and C relays are arranged in a two-out-of-three and two-out-of-four trip matrix for trip breaker No. 1. The above configuration is duplicated for trip breaker No. 2 using contacts from the B and D relays. Figure 7.2-17 shows only the circuits associated with the undervoltage trip coils; the energize-to-trip shunt trip coils and associated relay contacts are omitted for clarity, however the configuration is the same.

The planned logic system testing includes exercising the individual reactor trip breakers at least once to demonstrate system integrity. Subsequent logic tests will use installed indicating lights to verify proper logic functions. A bypass breaker is installed to allow opening the normal trip breaker. During MODES 1 and 2, the bypass breaker is maintained racked-out in the cell for reactor trip breaker B. Only one bypass breaker will be used in conjunction with testing of the reactor trip breakers. To test both reactor trip breakers, the bypass breaker must be racked-in the cell for one reactor trip breaker, after which it is physically moved to the cell associated with the other reactor trip breaker. One annunciator window on the main control board will indicate that the bypass breaker is closed in either cell. Direct red and green light indication on the main control board shows the bypass breaker position. Interlocks are provided to prevent bypass breakers from being used simultaneously in the cell for reactor trip breaker A and the cell for reactor trip breaker B.

As shown in Figure 7.2-17, the trip signal from the logic network is simultaneously applied to the main trip breaker associated with the specific logic chain as well as the bypass breaker associated with the alternate trip breaker. Should a valid trip signal occur while AB-1 is bypassing TB-1, TB-2 will be opened through its associated logic train. The trip signal applied to TB-2 is simultaneously applied to AB-1, thereby opening the bypass around TB-1. TB-1 would either have been opened manually as part of the test or would be opened through its associated logic train which would be operational or tripped during a test.

An auxiliary relay is located in parallel with the undervoltage coils of the trip breakers. This relay is tied to an event recorder which is used to indicate transmission of a trip signal through the logic network during testing. Lights are also provided to indicate the status of the individual logic relays.

7.2.4.2.2 Test Procedure

The following procedure illustrates the method used for testing trip breaker No. 1 and its associated logic network.

1. With the bypass breaker being tested (AB-1) racked-in, manually close and trip bypass breaker AB-1 to verify operation.
2. Manually re-close bypass breaker AB-1. Trip the associated reactor trip breaker (TB-1) using a selected logic combination.
3. Sequentially deenergize the trip relays (A1, A2, and A3) for each logic combination (1-2, 1-3, and 2-3). Verify that the logic network deenergizes the undervoltage coil on the reactor trip breaker TB-1 for each logic combination. Temporarily installed indicator lamps monitor the signal applied to the undervoltage coil, operation of the undervoltage coil can be determined from the indicator.
4. Repeat step (3) for every logic combination in each matrix, except Source Range Trip when at power.
5. Close the associated reactor trip breaker (TB-1). Then open and rack-out the bypass breaker (AB-1).

7.2.4.2.3 Logic Channel Test Panels

In order to minimize the possibility of operational errors from either the standpoint of tripping the reactor inadvertently or only partially checking all logic combinations, each logic network includes a logic channel test panel. This panel includes those switches, indicators, and recorders needed to perform the logic system test. The arrangement is shown in Figure 7.2-19. The test switches used to deenergize the trip bistable relays operate through inter-posing relays as shown in Figure 7.2-16 and Figure 7.2-18. This approach avoids violating the separation philosophy used in the analog channel design. Thus, although test switches for redundant channels are conveniently grouped on a single panel to facilitate testing, physical and electrical isolation of redundant protection channels are maintained by the inclusion of the interposing relay, which is actuated by the logic test switches. Identification of instrumentation protection systems is made by colored name plates on the cabinets.

7.2.4.3 Trip Breaker Testing and Preventive Maintenance

Preventive maintenance is performed on the reactor trip breakers each refueling outage. Preventive maintenance procedures conform to the intent of the guidance developed by the Westinghouse Owner's Group.

Response time testing of each reactor trip breaker is performed at each refueling outage in an off-line condition. Breaker response time is determined by deenergizing the undervoltage coil with the shunt trip coil blocked and then by energizing the shunt trip coil with the undervoltage coil blocked. Breaker clearing times are recorded and trended for signs of degradation. The measured response times are less than the 10 cycles assumed for accident analysis. Breaker response time averages about 6 cycles for the undervoltage trip attachment and about 3.5 cycles for the shunt trip attachment. Should the as-found response times show an upward trend and reach 8 cycles, the breaker components or the breaker itself will be replaced or repaired to maintain acceptable performance.

In addition to response time, the parameters of undervoltage trip attachment dropout voltage, trip force, and breaker insulation resistance are trended in order to detect degradation.

Functional testing of the reactor trip breakers is performed monthly with each of the two breakers tested on alternate months. The tests include independent testing of the undervoltage trip attachments and shunt trip attachments of the reactor trip breakers.

7.2.5 INTERACTION OF CONTROL AND PROTECTION SYSTEMS

7.2.5.1 Introduction

The design basis for the control and protection systems permits the use of a sensor for both protection and control functions. Where this is done, all equipment common to both the protection and control circuits is classified as part of the protection system. Isolation amplifiers prevent a control system failure from affecting the protection system. In addition, where failure of a protection system component can cause a process excursion which requires protective action, the protection system can withstand another independent failure without loss of function. Generally, this is accomplished with two-out-of-four trip logic. Also, wherever practical, provisions are included in the protection system to prevent a plant outage because of single failure of a sensor.

Evaluation of the Ginna Station Reactor Trip System (RTS) isolation was performed as part of the SEP, Topic VII-1.A. The safety evaluation concluded (*Reference 1*) that the Reactor Trip System (RTS) is adequately isolated from non safety systems and satisfies the criteria set forth in 10 CFR 50, Appendix A (GDC 24), and IEEE-279 (1971), Section 4.7.2.

7.2.5.2 Specific Control and Protection Interactions

7.2.5.2.1 Nuclear Flux

Four power-range nuclear flux channels are provided for overpower protection. (See Drawings 33013-1353, Sheet 2 and 33013-1353, Sheet 10.) Isolated outputs from all four channels are averaged for automatic control rod regulation of power. If any channel fails in such a way

as to produce a low output, that channel is incapable of proper overpower protection. In principle, the same failure would cause rod withdrawal and overpower. Two-out-of-four overpower trip logic will ensure an overpower trip if needed even with an independent failure in another channel.

In addition, the control system will respond only to rapid changes in indicated nuclear flux; slow changes or drifts are overridden by the temperature control signal. Also, a rapid decrease of any nuclear flux signal will block automatic rod withdrawal as part of the rod drop protection circuitry. Finally, an overpower signal from any nuclear channel will block automatic and manual rod withdrawal. The setpoint for this rod stop is below the reactor trip setpoint.

7.2.5.2.2 Coolant Temperature

Four T_{AVG} channels are used for overtemperature-overpower protection. Isolated output signals from all four channels are also averaged for automatic control rod regulation of power and temperature. In principle, a spuriously low temperature signal from one sensor would partially defeat this protection function and also cause rod withdrawal and overtemperature. Two-out-of-four trip logic is used to ensure that an overtemperature trip will occur if needed even with an independent failure in another channel.

In addition, channel deviation alarms in the control system will block automatic rod motion (insertion or withdrawal) if any temperature channel deviates significantly from the others. Automatic and manual rod withdrawal blocks will also occur if any two of four nuclear channels indicates an overpower delta T condition or if any two of four temperature channels indicates an overtemperature delta T condition. Finally, as shown in Section 15.4.2, the combination of trips on nuclear overpower, high pressurizer water level, and high pressurizer pressure also serves to limit an excursion for any rate of reactivity insertion.

7.2.5.2.3 Pressurizer Pressure

Three high pressure and four low pressure channels are used for high pressure and low pressure protection and for overpower and overtemperature protection.

Isolated output signals from these channels also are used for pressure control. These are discussed separately below.

A. Control of rod motion: the discussion for coolant temperature is applicable, i.e., two-out-of-four logic for overpower-overtemperature protection as the primary protection, with backup from multiple rod stops and "backup" trip circuits.

B. Pressure control: spray, Pressurizer Power Operated Relief Valves (PORV), and heaters are controlled by isolated output signals from the pressure protection channels.

Low pressure

A spurious high pressure signal from one channel can cause low pressure by spurious actuation of spray and/or a relief valve. Additional redundancy is provided in the protection system to ensure underpressure protection, i.e., two-out-of-four low pressure reactor trip logic

and one-out-of-three logic for safety injection. (Safety injection is actuated on two-out-of-three low pressure.)

In addition, interlocks are provided in the pressure control system such that a relief valve will close if either of two independent pressure channels indicates low pressure. Spray reduces pressure at a lower rate and sometimes is available for operator action (about 3 minutes at maximum spray rate before a low pressure trip is required).

High pressure

The pressurizer heaters are incapable of overpressurizing the reactor coolant system. Maximum steam generation rate with heaters is about 7500 lb/hr, compared with a total capacity of 576,000 lb/hr for the two safety valves and a total capacity of 358,000 lb/hr for the two Pressurizer Power Operated Relief Valves (PORV). Therefore, overpressure protection is not required for a pressure control failure. Two-out-of-three high pressure trip logic is therefore used.

In addition, either of the two Pressurizer Power Operated Relief Valves (PORV) can easily maintain pressure below the high-pressure trip point. The two Pressurizer Power Operated Relief Valves (PORV) are controlled by independent pressure channels, one of which is independent of the pressure channel used for heater control. Finally, the rate of pressure rise achievable with heaters is slow, and ample time and pressure alarms are available for operator action.

7.2.5.2.4 Pressurizer Level

Three pressurizer level channels are used for high-level reactor trip (two-out-of-three). Isolated output signals from these channels are used for volume control, increasing or decreasing water level. A level control failure could fill or empty the pressurizer at a slow rate (on the order of half an hour or more).

The pressurizer level instrument utilizes an open reference leg, which is maintained full by condensing steam from the pressurizer vapor space. Three pressurizer level transmitters are fed from independent reference legs. Channel independence is maintained from the reference leg to the sensors to the relays providing the trip logic as required by Section 7.1.2. This design is adequate for controlling pressurizer level and for safely performing all protection and safeguards functions.

High level

A reactor trip on pressurizer high level is provided to prevent rapid thermal expansions of reactor coolant fluid from filling the pres-surizer: the rapid change from high rates of steam relief to water relief could be damaging to the safety valves and the relief piping and pressure relief tank. However, a level control failure cannot actuate the safety valves because the high-pressure reactor trip is set below the safety valve set pressure. With the slow rate of charging available, overshoot in pressure before the trip is effective is much less than the difference between reactor trip and safety valve set pressures. Therefore, a control failure does not require protection system action. In addition, ample time and alarms are available for operator action.

Low level

A signal of low level from either of two independent level control channels will isolate letdown, thus preventing the loss of coolant. Ample time and alarms exist for operator action.

7.2.6 ANTICIPATED-TRANSIENT-WITHOUT-SCRAM MITIGATION SYSTEM ACTUATION CIRCUITRY

10 CFR 50.62 requires that all PWRs provide a means that is diverse and independent from the existing Reactor Trip System (RTS) for tripping the main steam turbine and initiating auxiliary feedwater flow following an anticipated transient without scram (ATWS) event. Anticipated transients include loss of normal feedwater flow, loss of electrical load that results in closure of the turbine stop valves, and loss of offsite power. Rochester Gas & Electric has installed a system providing ATWS mitigation system actuation circuitry (AMSAC) at Ginna Station that satisfies the 10 CFR 50.62 requirement (*Reference 2*). The AMSAC is based on low feedwater flow logic. The AMSAC is a nonClass 1E system designed to trip the turbine and start the motor-driven (MDAFW) and turbine-driven (TDAFW) auxiliary feedwater pumps if main feedwater flow is lost with reactor power above 40%. The actuation signal has a variable time delay that is a function of reactor power, to permit time to recover from partial loss of feedwater flow, if possible, without initiating AMSAC. In addition, a power level lock-in feature latches the timing value of the variable timer, for that power, at the moment an ATWS event actuates. Existing feedwater flow and turbine first-stage pressure instruments provide the necessary input signals. The AMSAC system is powered from the technical support center battery.

Four feedwater flow signals, two per loop, are used to detect the loss of main feedwater. Any three of the four channels indicating a loss of flow will call for initiation of auxiliary feedwater and a turbine trip.

The actuation signals are blocked (C-20 permissive) below a level of 40% reactor power, as determined by one of two turbine firststage pressure signals being below predetermined setpoints. Both of the turbine first-stage pressure signals exceeding their setpoint (corresponding to 40% reactor power) will arm the AMSAC logic and permit actuation of the turbine trip and auxiliary feedwater start circuits. To ensure the AMSAC system remains armed sufficiently long to perform its function in the event of a turbine trip, the C-20 permissive signal will be maintained via a preset time delay for at least 30 sec longer than the value of the variable timer at 40% nominal reactor power after the turbine trip has occurred. This interlock is provided since it has been demonstrated that the reactor coolant system pressure does not approach the ASME stress level C limit of 3200 psig when an ATWS event occurs below 40% reactor power. This is to ensure that spurious AMSAC actuations do not occur at low power operations and during startup. The block will automatically be removed as reactor power increases above the 40% level and reinstated as reactor power decreases below the 40% level.

The AMSAC signal processing hardware is Foxboro Spec 200 and Spec 200 Micro and is housed in a Spec 200 instrument rack (Fox 3 Rack) in the relay room. The existing feedwater flow and turbine first-stage pressure signals are input to the AMSAC from racks in the control and relay rooms via the relay room cable trays. In addition, AMSAC status lights and a man-

ual bypass switch are installed on the main control board. The AMSAC output actuation signals are input to the existing turbine trip and auxiliary feedwater start logic via qualified output relays. The AMSAC equipment power supply must be independent of existing Reactor Trip System (RTS) power supplies and shall not fail upon loss of offsite power. The technical support center battery satisfies these requirements. The AMSAC 120-V ac power supply is obtained from a static inverter, which receives its input from the technical support center battery.

During power operations, operability of the AMSAC is testable from each analog input to the final output actuation relay. The AMSAC actuation logic can be bypassed by the manual bypass switch to preclude actually tripping the turbine and starting auxiliary feedwater flow. Indication that the AMSAC is in the bypass mode is continuously displayed in the control room. During shutdown, operability of the system can be tested from the analog inputs to verification of turbine trip and initiation of auxiliary feedwater flow. Maintenance and testing at power is also possible by placing the system in the bypass mode.

REFERENCES FOR SECTION 7.2

1. Letter from D. M. Crutchfield, NRC, to L. D. White, Jr., RG&E, Subject: SEP Topic VII-1.A; Reactor Protection System Isolation, dated December 12, 1980.

2. Letter from C. Stahle, NRC, to R. C. Mecredy, RG&E, Subject: Safety Evaluation Report on Compliance with ATWS Rule, 10 CFR 50.62(c)(1), dated March 16, 1989.

Table 7.2-1
Table DELETED

Table DELETED

Table 7.2-2
PERMISSIVE CIRCUITS

Permissive Number	Function	Input
1	Rod stop on overpower	1/4 high nuclear flux (power range); 1/2 high nuclear flux (intermediate range); 2/4 overtemperature delta T; or 2/4 overpower delta T.
2	Auto-rod withdrawal stop at low powers	1/1 low Mwe load signal
3	Auto-rod withdrawal stop on rod drop	1/4 rapid decrease of nuclear flux or rod bottom indication
4	Steam dump interlock	1/1 rapid decrease of MWe load signal
5[a]		
6	Manual block of source range level trip	1/2 high intermediate range allows manual block, 2/2 low intermediate range defeats block
7	Permissive power (block various trips)	3/4 low-low nuclear flux or 1/2 low MWe load signal
8	Block single primary loop loss of flow trip	3/4 low nuclear power
9	Block reactor trip on turbine trip	3/4 low nuclear flux and steam bypass unblocked
10	Manual block of low power trip and intermediate range trip	2/4 high nuclear flux allows manual block, 3/4 low nuclear flux defeats manual block

a. Not applicable to this plant.

Table 7.2-3
REACTOR TRIP FUNCTION SETPOINTS

Reactor Trip Function	Limiting Safety System Setting	Protection
Source range high flux	$\leq 1x10^5$ CPS	Shutdown reactivity change start-up accident
Intermediate range high flux	current equivalent to ≤ 25.7% rated thermal power	Start-up accident
Power range high flux (low setpoint)	a	Start-up accident
Power range high flux (high setpoint)	a	Overpower
Single loop low flow	a	DNB
Two loop low flow	a	DNB
Manual	NA	Operator judgement
4-kV bus undervoltage	≥ 3101 volts	Anticipatory loss of RCS flow, DNB
4-kV bus under frequency	a	Anticipatory loss of RCS flow, DNB
Overtemperature ΔT	a	DNB
Overpower ΔT	a	Excessive kW/ft

Reactor Trip Function	Limiting Safety System Setting	Protection
Pressurizer low pressure	a	DNB limits range of overtemperature ΔT
Pressurizer high pressure	a	RCS overpressure
Steam generator low-low level	a	Loss of heat sink
Turbine trip		Limits temperature and pressure transients on reactor imposed by turbine trip
Autostop oil pressure or	≥ 45 psig	
Turbine stop valves	Closed	
Safety injection	Any of 4 safety injection signals	Trips reactor to limit DNB
Zirc guide		Rod drive damage
T_{hot}	500°F[b]	
Pressurizer high level	a	Prevent water relief through pressurizer safety valves and RCS integrity

a. Technical Specifications Table 3.3.1-1 specifies the limiting Trip Setpoint for Reactor Trip functions credited in the accident analyses.

b. This is a nominal value, as the Zirconium Guide Tube Trip is a commercial concern only.

Figure 7.2-1 ***Reactor Protection Systems***

GINNA/UFSAR
CHAPTER 7 INSTRUMENTATION AND CONTROLS

Figure 7.2-1 Reactor Protection Systems

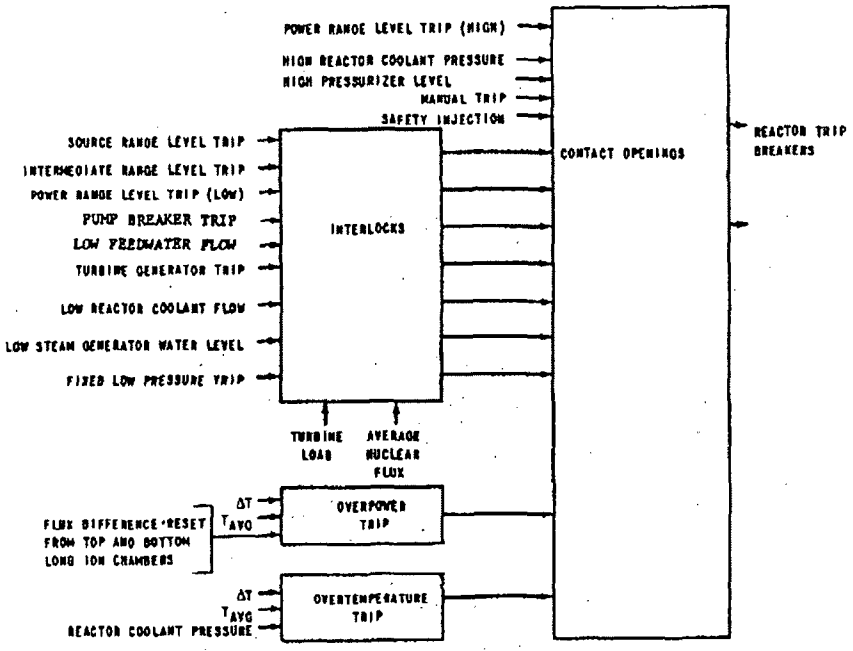

R.E. GINNA NUCLEAR POWER PLANT UPDATED FINAL SAFETY ANALYSIS REPORT
Figure 7.2-1 Reactor Protection Systems

Figure 7.2-2 Figure DELETED

Figure Deleted

Figure 7.2-3 Figure DELETED

Figure Deleted

Figure 7.2-4 Figure DELETED

Figure Deleted

Figure 7.2-5 Figure DELETED

Figure Deleted

Figure 7.2-6 Figure DELETED

Figure Deleted

Figure 7.2-7 Figure DELETED

Figure Deleted

Figure 7.2-8 Figure DELETED

Figure Deleted

Figure 7.2-9 Figure DELETED

Figure Deleted

Figure 7.2-10 Figure DELETED

Figure Deleted

Figure 7.2-11 Figure DELETED

Figure Deleted

Figure 7.2-12 Design Philosophy to Achieve Isolation Between Channels

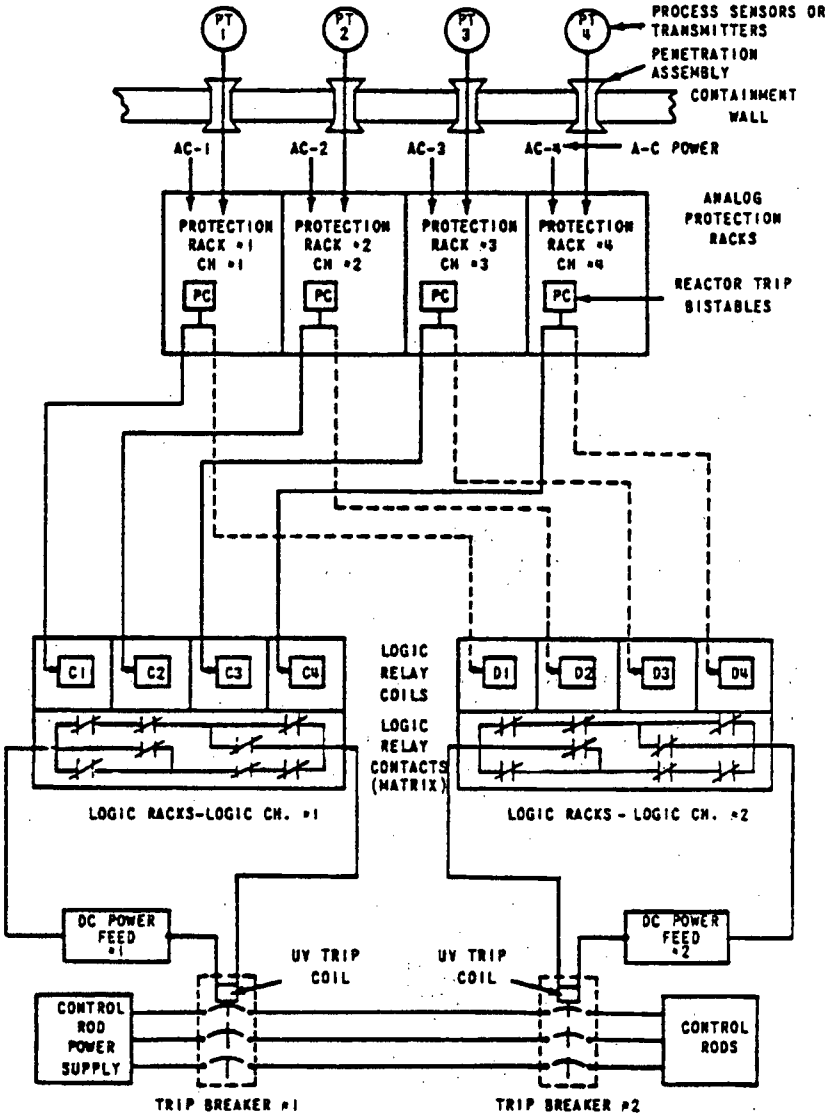

NOTE: SHUNT TRIP COIL CIRCUITS NOT SHOWN - SEE SECTION 7.2.2.6.1

ROCHESTER GAS AND ELECTRIC CORPORATION
R.E. GINNA NUCLEAR POWER PLANT
UPDATED FINAL SAFETY ANALYSIS REPORT

Figure 7.2-12

Design Philosophy to Achieve Isolation Between Channels

REV 4 12/88

Figure 7.2-13 Figure DELETED

Figure Deleted

Figure 7.2-14 Channel Configuration (Channel 1 Typical) T_{avg} / ΔT Control and Protection System

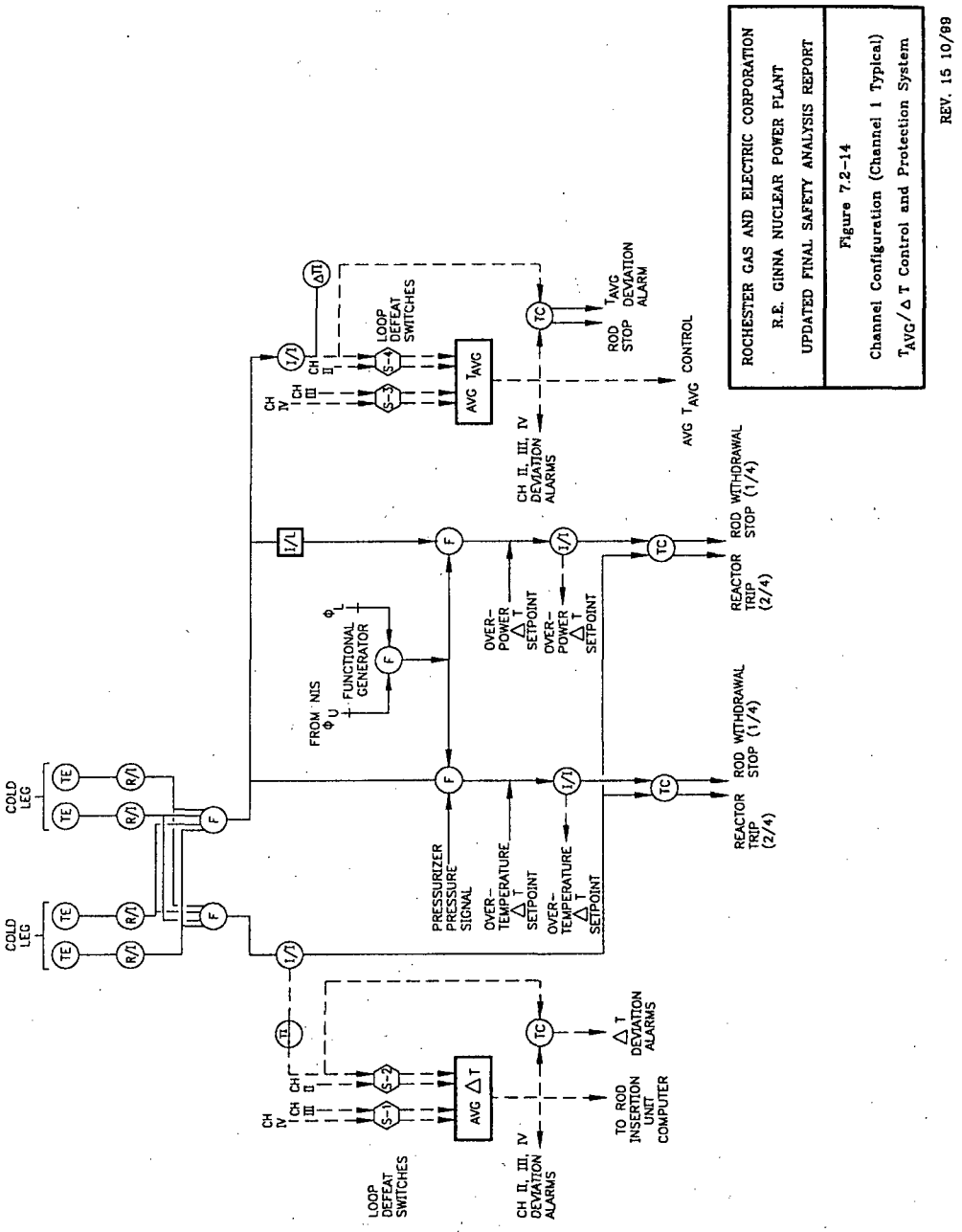

Figure 7.2-15 Analog System Symbols

Lo.L	-	Low level
AL.	-	Alarm
L.T.	-	Level transmitter
PS	-	Power supply
I/I	-	Isolation current repeater
LC, PC, FC	-	Level, pressure or flow controller (off-on unless output signal is shown)
Hi LRT	-	High level reactor trip
Lo LRT	-	Low level reactor trip
Hi PRT	-	High pressure reactor trip
Lo PRT	-	Low pressure reactor trip
SI	-	Safety injection
TJ	-	Test signal insertion jack
TP	-	Test point
LI	-	Level indicator
L_{ref}	-	Programmed reference level
(S)	-	Control channel transfer switch (used to maintain auto channel during test of the protection channel)
PT	-	Pressure transmitters
FT	-	Flow transmitters
PI	-	Pressure indicator
FI	-	Flow indicator
F	-	Special function (such as a pressure compensation unit or lead/lag compensation, or math/lead/lag compensation)
TE	-	Temperature element
R/I	-	Resistance to current connector
ISOL	-	Isolation (other than I/I)
$\phi_{U,L}$	-	Out of core upper or lower ion chamber flux signals
P_{ref}	-	Programmed reference pressure
NQ	-	Nuclear power supply
NE	-	Nuclear detector
T	-	Built-in test point
NI	-	Nuclear indicator
NC	-	Nuclear controller

ROCHESTER GAS AND ELECTRIC CORPORATION
R.E. GINNA NUCLEAR POWER PLANT
UPDATED FINAL SAFETY ANALYSIS REPORT

Figure 7.2-15
Analog System Symbols

REV.14 5/98

Figure 7.2-16 Analog Channel Testing Arrangement

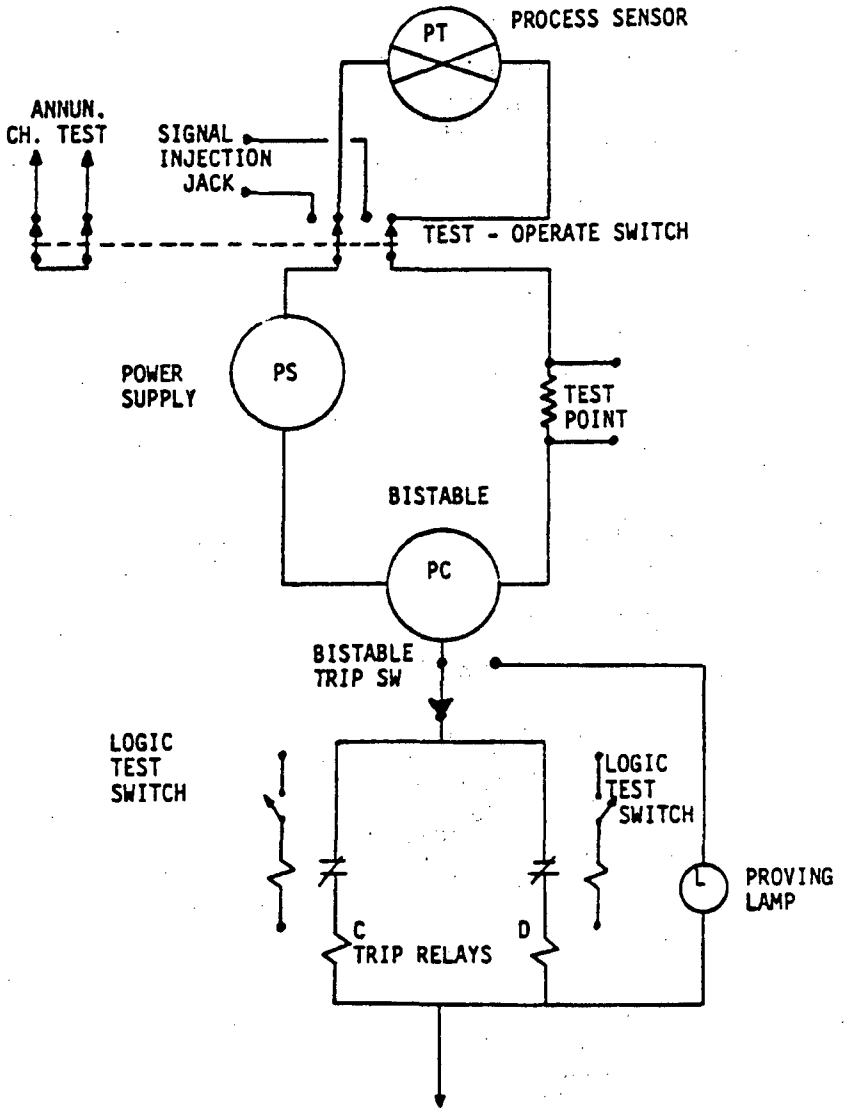

ROCHESTER GAS AND ELECTRIC CORPORATION R.E. GINNA NUCLEAR POWER PLANT UPDATED FINAL SAFETY ANALYSIS REPORT
Figure 7.2-16 Analog Channel Testing Arrangement

Figure 7.2-17 Trip Logic Channels

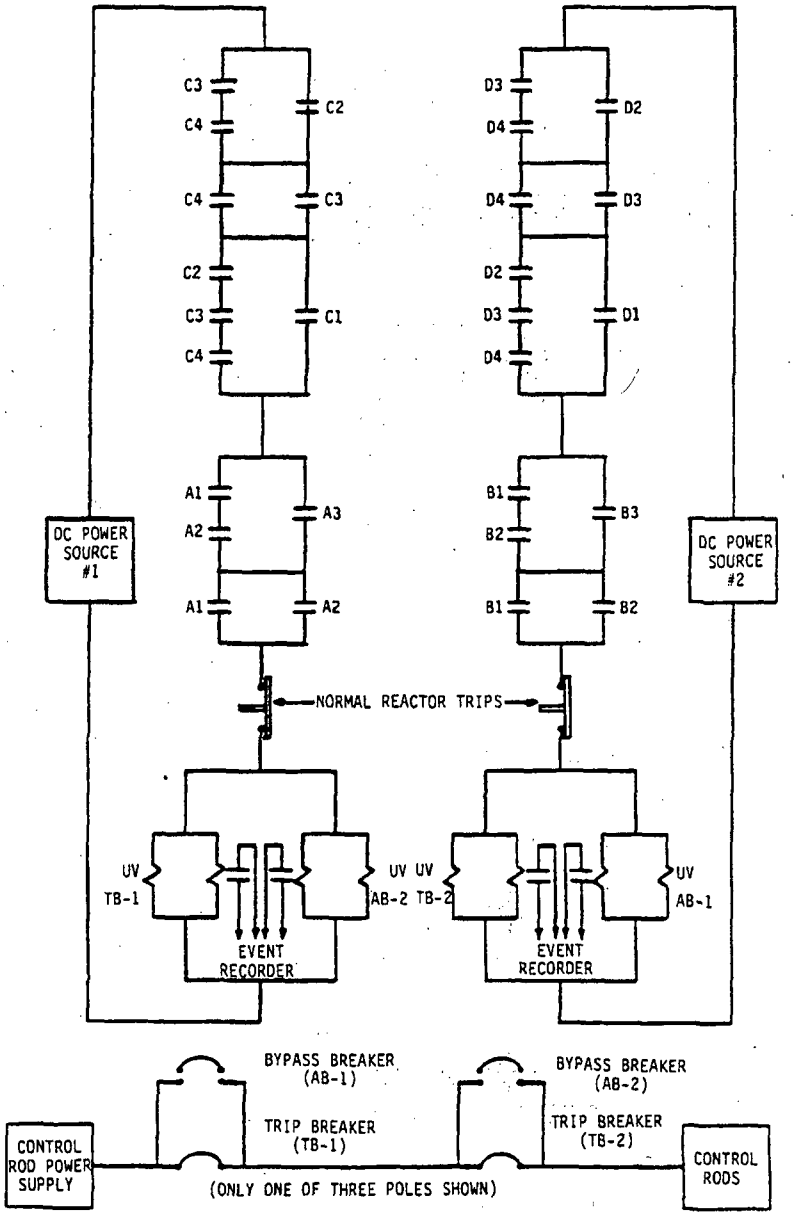

NOTES: (1) SHUNT TRIP COIL CIRCUITS ARE OMITTED FOR CLARITY.

(2) ONLY ONE BYPASS BREAKER IS PROVIDED. IT IS INSTALLED IN THE APPROPRIATE ENCLOSURE WHEN REQUIRED FOR TESTING.

ROCHESTER GAS AND ELECTRIC CORPORATION
R.E. GINNA NUCLEAR POWER PLANT
UPDATED FINAL SAFETY ANALYSIS REPORT

Figure 7.2-17
Trip Logic Channels

REV 3 12/87

Figure 7.2-18 Analog Channels

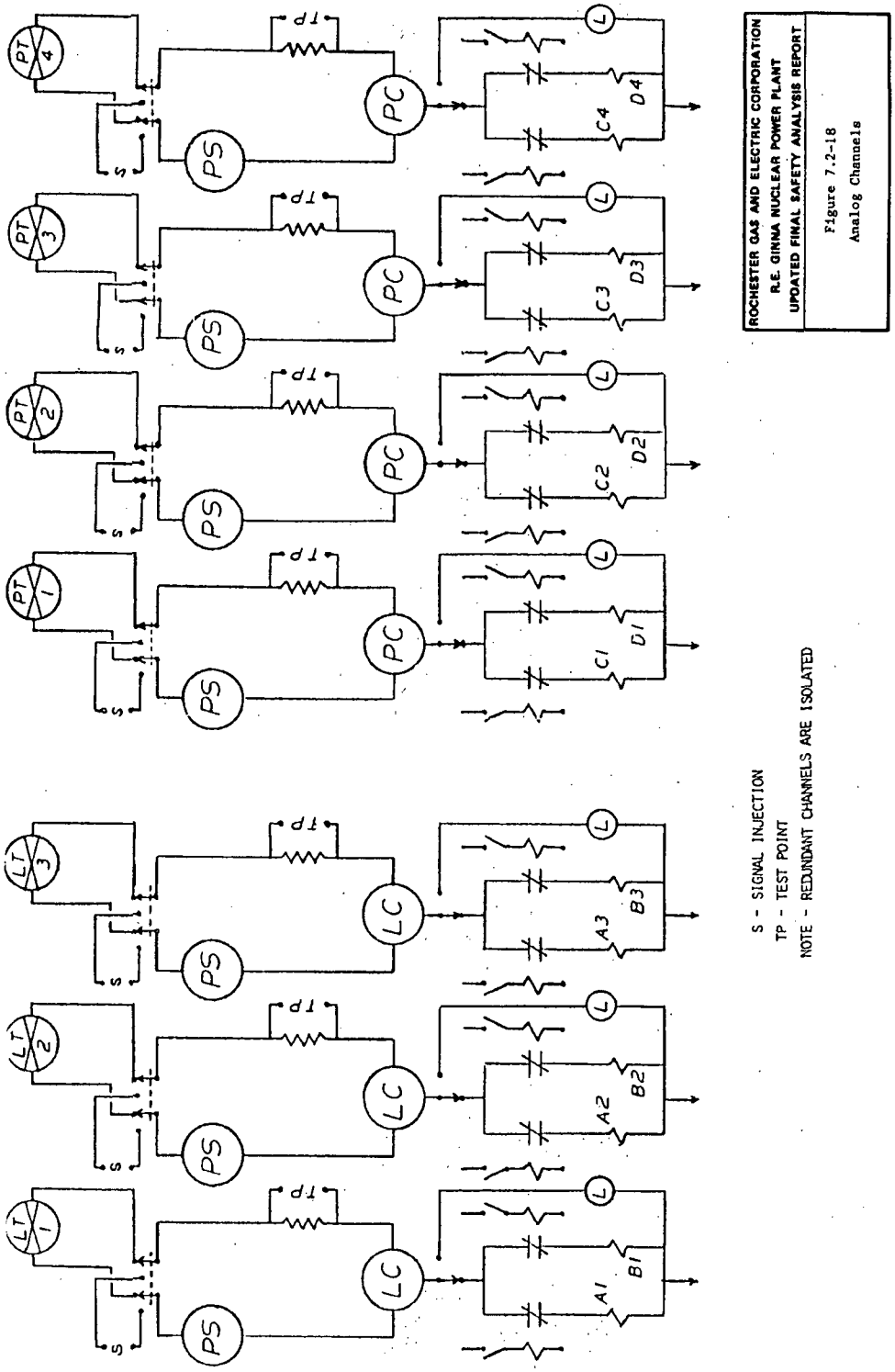

Figure 7.2-19 Logic Channel Test Panels

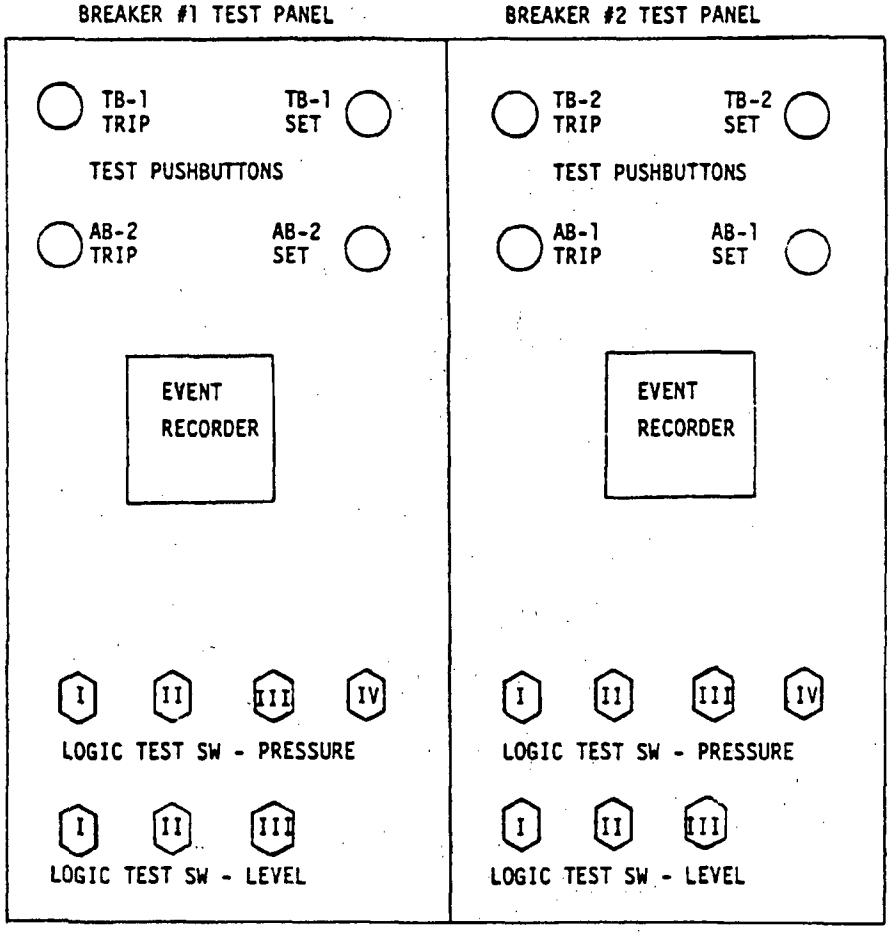

ROCHESTER GAS AND ELECTRIC CORPORATION
R.E. GINNA NUCLEAR POWER PLANT
UPDATED FINAL SAFETY ANALYSIS REPORT

Figure 7.2-19
Logic Channel Test Panels

Figure 7.2-20 Electrical Diagram - Undervoltage Coil and Shunt Trip Assembly

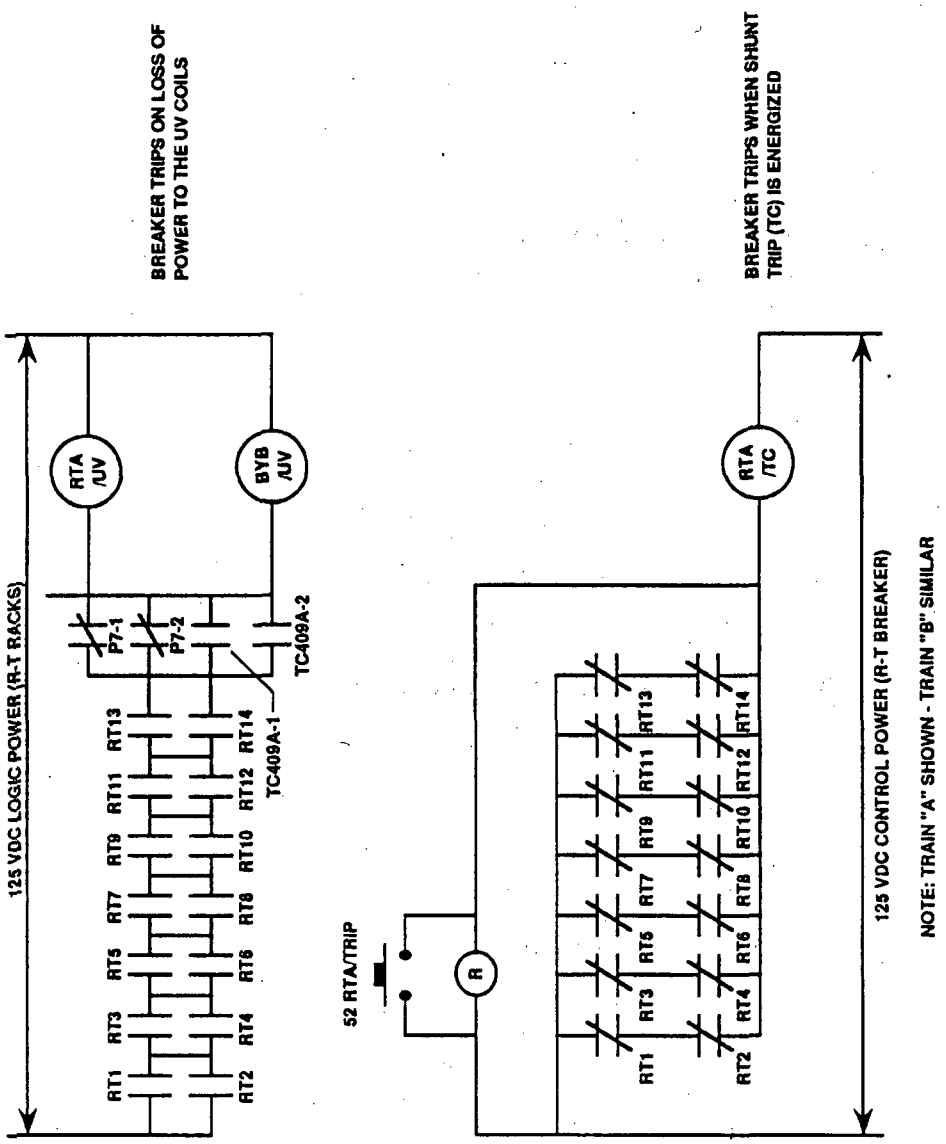

ROCHESTER GAS AND ELECTRIC CORPORATION
R. E. GINNA NUCLEAR POWER PLANT
UPDATED FINAL SAFETY ANALYSIS REPORT

Figure 7.2-20

Electrical Diagram - Undervoltage Coil and Shunt Trip Assembly

REV 7 12/91

7.3 ENGINEERED SAFETY FEATURES SYSTEMS

The engineered safety features systems are used to provide protection against the release of radioactive materials in the event of a loss-of-coolant accident or a secondary line break accident. The engineered safety features systems function to maintain the reactor in a shutdown condition. They also provide sufficient core cooling to limit the extent of fuel and fuel cladding damage and to ensure the integrity of the containment structure. These functions rely on the Engineered Safety Features Actuation System (ESFAS) and associated instrumentation and controls.

7.3.1 DESIGN CRITERIA

The design criteria discussed in Section 7.2.1 for the Reactor Trip System (RTS) are equally applicable for the engineered safety features actuation. The following criteria were used during the licensing of Ginna Station. They represent the Atomic Industrial Forum (AIF) version of proposed criteria issued by the AEC for comment on July 10, 1967 (see Section 3.1.1). Conformance with 1972 General Design Criteria of 10 CFR 50, Appendix A is discussed in Section 3.1.2. The criteria discussed in Section 3.1.2 as they apply to the engineered safety features systems include 2, 4, 13, 19, 20, 21, 22, 23, 24, and 29.

7.3.1.1 Protection Systems

CRITERION: Protection systems shall be provided for sensing accident situations and initiating the operation of necessary engineered safety features (AIF-GDC 15).

The Engineered Safety Features Actuation System (ESFAS) provides actuation of the following functions: safety injection, containment isolation, steam line isolation, containment spray and feedwater isolation, automatic diesel startup, and preferred auxiliary feedwater pump startup.

The safety injection system delivers water to the reactor core following a loss-of-coolant accident. The principal components of the safety injection system are two passive accumulators (one for each loop), three high-head safety injection pumps, two low-head safety injection (residual heat removal) pumps, and the essential piping and valves. The accumulators are passive devices which discharge into the cold leg of each loop.

The safety injection system may be actuated by two-out-of-three low-pressurizer-pressure signals, two-out-of-three low-steam-line-pressure signals, two-out-of-three high-containment-pressure signals; or the system can be actuated manually. Any of the safety injection system signals will open the system isolation valves, start the high-head safety injection pumps and the low-head (residual heat removal) pumps (see Section 6.3).

The steam line isolation valves are closed upon receipt of high steam line flow in conjunction with a safety injection system signal, by containment pressure, or by manual initiation. See Section 6.2.4.3 and Section 7.3.2.2.1 for a more detailed description of steam line isolation.

The containment spray system consists of two pumps, one spray additive tank, valves, piping, and spray nozzles. Containment spray is initiated by coincident signals from two sets of two-out-of-three containment pressure signals monitoring containment high-high pressure. The

actuation signal starts the pumps and opens the discharge valves to the spray header. Valves for the spray additive tank open after a very short time delay.

Containment isolation is initiated by an automatic safety injection system signal or manually. Actuation of containment isolation trips the containment sump pumps, closes containment isolation valves (as discussed in Section 6.2.4 and listed in Tables 6.2-15 and 6.2-16), and trips the purge supply and exhaust fans. Containment ventilation isolation and depressurization valves are also isolated on high containment activity (R-11 and R-12), any safety injection signal, or from a manual containment spray signal. See Section 6.2.4.3 for a more detailed description of containment isolation and containment ventilation isolation.

The feedwater isolation system consists of the two main feedwater regulating valves, two main feedwater regulating valve bypass valves, and two main feedwater isolation valves. The main feedwater regulating valves and the main feedwater regulating bypass valves close when they receive a safety injection system signal or an engineered safety feature sequence initiation signal. They fail closed if power or air is lost. The two main feedwater isolation valves close when they receive a safety injection signal. They fail close if power or instrument air is lost. See Section 7.3.2.2.2 for a more detailed description of feedwater isolation.

Automatic diesel startup will be caused by undervoltage at the engineered safety features buses in addition to being caused by the safety injection signal.

The motor-driven auxiliary feedwater pumps (MDAFW) start upon a safety injection signal, either steam-generator low-low level, loss of both main feedwater pumps, or ATWS Mitigation System Actuation Circuitry (AMSAC) actuation. The turbine-driven auxiliary feedwater pump (TDAFW) will start on low-low level in both steam generators and loss of bus voltage on 11A and 11B. See Section 7.3.2.2.2 and Section 7.2.6 for a more detailed description of auxiliary feedwater pump starts.

7.3.1.2 Redundancy and Independence

CRITERION: Redundancy and independence designed into protection systems shall be sufficient to assure that no single failure or removal from service of any component or channel of such a system will result in loss of the protection function. The redundancy provided shall include, as a minimum, two channels or protection for each protection function to be served (AIF-GDC 20).

The initiation of the engineered safety features provided for loss-of-coolant accidents (e.g., high-head safety injection and residual heat removal pumps, and containment spray systems) is accomplished from several signals derived from reactor coolant system and containment instrumentation. Channel independence is carried throughout the system from the sensors to the signal output relays including the power supplies for the channels. (Routing and separation standards applicable to existing cables are those that were invoked at the time of cable installation. For more information, see Section 8.3.1.4.) The initiation signal for containment spray comes from coincidence of two sets of two-out-of-three high-high containment pressure signals. The containment fan cooler recirculation system is initiated by a safety injection signal and the dampers are aligned to make use of the charcoal filters.

The signal for containment isolation of nonvital valves, i.e., the isolation valves trip signal, is derived from an automatic safety injection signal. This setpoint for safety injection input from coincident two-out-of-three containment high-pressure signals is below that for containment spray actuation.

Strict administrative control prevents the opening of large penetrations during reactor operation. For example, personnel locks are interlocked to ensure that one door is always closed, with verification by signals in the main control room. Ventilation purge valves also must be maintained closed at all times while the reactor is critical and cannot be opened until the reactor has been subcritical for at least 1 hr. (See Section 6.2.4.4.9. for a description of current containment purging methodology.)

The Ginna onsite emergency ac power system consists of two redundant diesel-generator power trains. Diesel generator 1A supplies 480-V buses 14 and 18 and diesel generator 1B supplies 480-V buses 16 and 17.

Manual means exist to tie buses 17 and 18 through a tie breaker and to tie buses 14 and 16 through two tie breakers. The control circuit for each electrically operated breaker provides interlocks such that the breaker cannot be closed if more than one diesel generator or normal supply breaker is closed on either bus. Additionally, if the tie breakers are closed, they will trip upon a safety injection signal or when an undervoltage signal is received from both buses the breaker ties together. Restoration of normal supply or diesel generator supply breakers onto a bus requires the respective bus tie breaker to be opened. For buses 14 and 16, manual operation would be required to physically insert and close the manually operated bus tie breaker at bus 14. For buses 17 and 18, manual operation would be required to physically insert the bus tie breaker prior to electrically closing the breaker.

7.3.1.3 Testing While In Operation

CRITERION: Means shall be included for suitable testing of the active components of protection systems while the reactor is in operation to determine if failure or loss of redundancy has occurred (AIF-GDC 25).

The testability of the protection channels at power is discussed in Section 7.2.1.

Periodic testing of the diesel generators is routinely performed to ensure their operability. During power operation, surveillance testing verifies that the fuel transfer system is operational, the diesels start from normal standby conditions, the generators are properly synchronized and loaded, and that proper alignment is made so that the diesel generators could supply safeguards bus power. During shutdown conditions, the diesel generators are tested to ensure they can restore safeguards bus voltage in a timely manner by automatically actuating breakers in the time period required.

7.3.1.4 Fail Safe Design

CRITERION: The protection systems shall be designed to fail into a safe state or into a state established as tolerable on a defined basis if conditions such as disconnection of the systems, loss of energy (e.g., electrical power, instrument air), or adverse

environments (e.g., extreme heat or cold, fire, steam, or water) are experienced (AIF-GDC 26).

The design criterion for the protection systems in general is addressed in Section 7.2.1.

7.3.2 SYSTEM DESCRIPTION

The function of the instrumentation and control associated with the engineered safety features is to supply component trip signals and to initiate the engineered safety features.

The Engineered Safety Features Actuation System (ESFAS) logic and sequence are shown in Drawing 33013-1353, Sheets 6 through 9. The major difference between the engineered safety features instrumentation and the Reactor Trip System (RTS) instrumentation (Section 7.2.2) is that each protective action is initiated by two pairs of coincident input signals which actuate the engineered safety features equipment. Protective action is initiated when either of the two channels becomes deenergized.

Sensors, process and nuclear instrumentation, and protection cabinets are discussed in Section 7.2.2.1. The Engineered Safety Features Actuation System (ESFAS) logic controls are arranged and operate in a similar manner to that of the reactor trip logic cabinets. There are four cabinets for each protection train. Each cabinet receives protection signals from the safeguards bistables in the protection cabinets. All of the cabinets are divided into two sections by a metal divider plate. The safeguards logic relays are located in the front section, and master and auxiliary relays are positioned in the rear of the cabinets. The safeguards logic relay coils are powered by the actuation bistables in the protection cabinets and are energized during normal operations. As in the reactor trip logic cabinets, the logic relay contacts are arranged in a logic matrix, a major difference being the safeguards logic relay contacts are shut when the respective coil is deenergized. The logic matrices are wired in series with the master relay and a power supply, which therefore regulate the relays state of operation. The master relay contacts control the power supplied to the auxiliary relays. One master relay controls several auxiliary relays. The auxiliary relays in turn control the automatic operation of various pieces of engineered safety features equipment.

When a condition within the reactor plant occurs that requires engineered safety features actuation, the protection bistables will switch to the OFF state at the output. Once this occurs, the safeguards logic relays will deenergize, shutting their contacts. When the required number of logic relay contacts within the logic matrix shut, the master relay will energize, closing its contacts and activating the auxiliary relays. As the auxiliary relays contacts shut, different pieces of engineered safety features equipment start up or operate to mitigate the detected unsafe condition.

7.3.2.1 Initiating Circuitry

The Engineered Safety Features Actuation System (ESFAS) circuitry and hardware layout are designed to maintain circuit isolation through the bistable-operated logic relays. The channelized design follow-through is shown in Figure 7.3-4.

The safeguards bistables, mounted in the analog protection racks, drive both A and B logic matrix relays. Each matrix contains its own test light and test circuitry. Control power for

logic channels A and B is supplied from dc sources 1 and 2, respectively. These redundant actuating channels operate the various engineered safety features components that are required, with the large loads sequenced as necessary.

Manual reset of the Engineered Safety Features Actuation System (ESFAS) relays may be accomplished at any time following their operation. Once reset action is taken, the master relay is reset and its operation blocked until the engineered safety features initiating signal clears, at which time it is automatically unblocked and restored to service.

Protection channel separation is maintained by metal barriers arranged as shown in Figure 7.3-4. Protection channel identity is lost in the intermixing of the relay matrix wiring. Separation of A and B logic channels is maintained by the separate logic racks.

7.3.2.2 System Functions

The engineered safety features instrumentation automatically performs the following vital functions:

1. Starts operation of the safety injection system.
2. Operates the containment isolation and ventilation isolation valves.
3. Starts the containment spray system upon detection of a higher containment pressure signal than required in item 2 above, based on coincidence of two sets of two-out-of-three high-pressure signals.
4. Starts the containment fan cooler recirculation system.

7.3.2.2.1 Steam Line Isolation

Either of the following signals will initiate steam line isolation:

1. One-out-of-two high-high steam flow in a particular steam line in coincidence with any safety injection signal will close the main steam isolation valve in that line. One-out-of-two high steam flow in a steam line in coincidence with two-out-of-four indications of low T_{AVG} and any safety injection signal will also close the main steam isolation valve in that line.
2. Two-out-of-three high-high-containment-pressure signals will close both main steam isolation valves.
3. Manual steam line isolation (pushbutton) will close the associated main steam isolation valve.

7.3.2.2.2 Feedwater Line Isolation

The feedwater isolation system consists of two main feedwater isolation valves, two main feedwater regulating valves, and two main feedwater regulating bypass valves. The main feedwater regulating valves and the bypass valves close when they receive a safety injection system signal or an engineered safety feature sequence initiation signal. They fail close if power or air is lost. Any safety injection signal will redundantly isolate the feedwater lines by (1) venting the supply air to all main feedwater regulating valves causing valves to close, (2)

closing the main feedwater isolation valves, and (3) tripping the main feedwater pumps, including closure of the feedwater pump discharge valves.

Additional safety features are provided to prevent emergency conditions from becoming accident conditions. These are:

1. Automatic diesel startup will be caused by low voltage on the feeder lines to the engineered safety features buses in addition to being caused by the safety injection signal.
2. The motor-driven auxiliary feedwater pumps (MDAFW) start upon a safety injection signal, steam generator low-low level on either steam generator, trip of both main feedwater pumps, or ATWS Mitigation System Actuation Circuitry (AMSAC) actuation.
3. The turbine-driven auxiliary feedwater pump (TDAFW) will start on low-low level in both steam generators, loss of voltage on both 4160-V buses 11A and 11B, or AMSAC actuation.
4. **The TDAFW pump DC Lube Oil Pump can be powered by a portable diesel generator (DC) in the emergency event of a loss of site AC and DC power, to maintain proper steam generator level.**
5. The Main Feedwater Regulating Valves (MFRV) and bypass valves will close after a reactor trip in coincidence with low T_{AVG}, if the valves are in automatic control.
6. The MFRV and bypass valve for a steam generator will close on high steam generator level in the associated steam generator.

The **4-k V buses 11A and 11B loss of voltage** trip setpoint for the start of the turbine driven auxiliary feedwater (TDAFW) pump is 2870-Volts.

The trip logic for the Engineered Safety Features Actuation System (ESFAS) is shown in Drawing 33013-1353, Sheets 6, 7, and 9.

7.3.2.3 Sensing and Display Instrumentation

The following instrumentation helps to monitor the effective operation of the engineered safety features:

7.3.2.3.1 Reactor Vessel Level Indication System

Redundant differential pressure transducers are used to monitor reactor vessel coolant level during all phases of plant operation, including postaccident conditions with quasi-steady-state conditions and during relatively slow developing transients. The system provides trending of reactor vessel coolant inventory to ensure adequate core cooling during these postaccident and transient conditions. (Section 7.6.5.)

7.3.2.3.2 Containment Pressure

Six channels monitoring containment pressure reflect the effectiveness of engineered safety features.

7.3.2.3.3 Containment Sump Level

Redundant containment sump B level indicators (LI-942 and LI-943) show that water has been delivered to the containment following an accident and that, subsequently, the residual heat removal pumps will be effective in providing recirculation flow. These containment sump B level indicating switches are designed to withstand accident conditions.

7.3.2.3.4 Accumulator Level and Pressure

Redundant pressure and level transmitters for each accumulator provide information about the ability of the accumulators to discharge their contents into the reactor coolant system cold legs following a loss-of-coolant accident.

7.3.2.3.5 Refueling Water Storage Tank Level (RWST)

Two channels indicate that safety injection and containment spray have removed water from the storage tank and provide information on when to initiate the sump switchover emergency procedure.

7.3.2.3.6 Sodium Hydroxide Tank Level and Flow

Transmitters provide information necessary to determine the quantity of NaOH injected into the containment spray system during the injection and recirculation phases following a loss-of-coolant accident.

7.3.2.3.7 Safety Injection Pumps Discharge Pressure and Flow

These channels clearly show that the safety injection pumps are operating and delivering sufficient flow to the proper loops. The pressure transmitters are outside the containment; the flow transmitters are inside the containment.

7.3.2.3.8 Residual Heat Removal (Low-Head Safety Injection) Flow

Redundant transmitters provide the capability to determine the effectiveness of these pumps to deliver the necessary flow.

7.3.2.3.9 Pump Energization

All pump motor power feed breakers indicate that they have closed by energizing indicating lights on the control board.

7.3.2.3.10 Valve Position

All active engineered safety features valves have position indication on the control board to show proper positioning of the valves. Air-operated and solenoid-operated valves are selected so as to move in a preferred direction on the loss of air or power. Motor-operated valves remain in their positions at the time of loss of power to the motor.

7.3.2.3.11 Residual Heat Exchangers

Combined exit flow is indicated and combined inlet temperature is recorded on the control board to monitor operation of the residual heat exchangers. In addition, the exit temperature of each heat exchanger is locally indicated. These transmitters are outside reactor containment.

7.3.2.3.12 Alarms

Visual and audible alarms are provided to call attention to abnormal conditions. The alarms are of the individual acknowledgement type; that is, the operator must recognize and silence the audible alarm for each alarm point. For most control systems, the sensing device and circuits for the alarms are independent, or isolated from, the control devices.

7.3.2.3.13 Air Coolers

The cooling water discharge flow and exit temperature of each of the four containment fan coolers are alarmed in the control room if the flow is low or if the temperature is high. The transmitters are outside the reactor containment. In addition, the exit flow is monitored for radiation and alarmed in the control room if high radiation should occur. This is a common monitor and the faulty cooler can be detected locally by manually valving each one out in turn.

7.3.2.3.14 Local Instrumentation

In addition to the above, the following local instrumentation is available:

- Residual heat removal (RHR) pumps discharge pressure.
- Residual heat exchanger exit temperatures.
- Containment spray (CS) test lines total flow.
- Safety injection (SI) test line flow and SI pump pressure.

7.3.2.4 Engineered Safety Features Reset Controls

Safety Injection Circuit. This circuit has a reset switch which gives the operator the means of resetting safety injection 1 minute or longer after initiation. Actuation of the reset switch only does not change the state of any equipment but permits the operator to place the equipment affected by safety injection to the position desired.

Containment Ventilation Isolation Circuit. This circuit has been modified to ensure that no equipment changes state upon the actuation of the containment ventilation isolation reset switch. Once the reset switch has been actuated, the operator must then operate the control module switch/indicator on the containment isolation reset pushbutton panel for equipment requiring change of state.

Containment Isolation Circuit. This circuit has been modified to ensure that no equipment changes state upon the actuation of the containment isolation reset switch. Once the reset switch has been actuated the operator must then operate the control module switch/indicator on the containment isolation reset pushbutton panel for equipment requiring change of state.

Containment Spray Circuit. This circuit has a reset switch which gives the operator the means of resetting containment spray. Once the reset switch has been actuated, the spray additive tank discharge valves will return automatically to the position called for by their controllers.

The containment spray pumps and their discharge valves would require operator action to change state. This capability is necessary so the operator has flexibility in dealing with post-accident conditions within containment (i.e., loss-of-coolant accident or steam line break).

7.3.3 DESIGN EVALUATION

7.3.3.1 Engineered Safety Features Systems Isolation

The engineered safety features control logic and design were evaluated under the Systematic Evaluation Program (SEP), Topic VII-2 (*Reference 1*), as it conforms to 10 CFR Part 50, Appendix A; General Design Criteria 22 and 24; and IEEE 279-1971. The evaluation concluded that nonsafety systems which are electrically connected are properly isolated from the engineered safety features and that the isolation devices meet the above licensing criteria.

7.3.3.2 Loss of Voltage or Degraded Voltage on Engineered Safety Features Bus

The loss of voltage and degraded voltage trips ensure operability of engineered safety features equipment during a postulated design-basis event concurrent with a degraded bus voltage condition.

The undervoltage setpoints are selected so that engineered safety features motors will start and accelerate the driven loads (pumps) within the required time and will be able to perform for long periods of time at degraded conditions above the trip setpoints without significant loss of design life. All control circuitry or safety-related control centers and load centers, except for motor control centers M and L, are dc. Therefore, degraded grid voltages do not affect these control centers and load centers. Motor control centers M and L, which supply the standby auxiliary feedwater system, are fully protected by the undervoltage setpoints. Further, the standby system is normally not in service and is manually operated only in the event of a total loss of feedwater and preferred auxiliary feedwater. Degraded and loss of voltage conditions are discussd in Sections 8.3.1.1.4.1. and 8.3.1.2.7.

7.3.4 TESTING

7.3.4.1 Analog Channel Testing

The basic elements comprising an analog protection channel are shown in Figure 7.3-6. This system consists of a transmitter, power supply, bistable, bistable trip switch and proving lamp, test signal injection switch, test signal injection jack, and test point.

Each protection rack will include a test panel containing those switches, test jacks, and related equipment needed to test the channels contained in the rack. A hinged cover encloses the signal injection switch and signal injection jack of the test panel.

Opening the cover or placing the test-operate switch in the TEST position will initiate an alarm identifying the rack under test. These alarms are arranged on a rack basis to preclude

entry to more than one redundant protection rack (or channel) at any time. The test panel cover is designed such that it cannot be closed (and the alarm cleared) unless the test device plugs (described below) are removed. Closing the test panel cover will mechanically return the test switches to the NORMAL position.

Administrative procedures will require that the bistable in the channel under test be placed in the tripped mode prior to test. This places a proving lamp across the bistable output so that the bistable trip setting can be checked during channel calibration. The bistable trip switches must be manually reset after completion of a test. Closing the test panel cover will not restore these switches to the untripped mode. To prevent safety injection trip, procedures limit bistable testing to one circuit at a time.

Actual channel calibration will consist of producing a test signal using the transmitter power supply external calibration device which plugs into the signal injection jack. In this application, where specified, the channel power supply will serve as a power source for the calibration device to permit verifying the output load capacity of the power supply. Test points are located in the analog channel and provide an independent means of measuring and/or monitoring the calibration signal level.

7.3.4.2 Logic Channel Testing

Figure 7.3-6 shows the basic logic test scheme. Test switches will be located in the associated relay racks rather than in a single test panel. The following procedures will be used for testing the logic matrices:

A. Following administrative procedure, test channel A or B one at a time.

B. Select a matrix and turn the test switches to TEST, then depress the push button. Test lights will glow upon actuation of the matrix being tested. Release pushbutton and return test switch to OPERATE. ON TEST lights glow any time any switch is in a test position. Test lights can be tested by depressing the lens.

C. Verify master actuating relay coil integrity by connecting ohmmeter across coil terminals.

REFERENCES FOR SECTION 7.3

1. Letter from D. M. Crutchfield, NRC, to J. E. Maier, RG&E, Subject: SEP Topic VII-2, Engineered Safety Features System Control Logic and Design, Safety Evaluation for Ginna, dated December 28, 1981.

Figure 7.3-1 Sheet 1 - Figure DELETED

Figure Deleted

Figure 7.3-1 Sheet 2 - Figure DELETED

Figure Deleted

Figure 7.3-2 Figure DELETED

Figure Deleted

Figure 7.3-3 Figure DELETED

Figure Deleted

Figure 7.3-4 Actuation Circuits of Engineered Safety Features

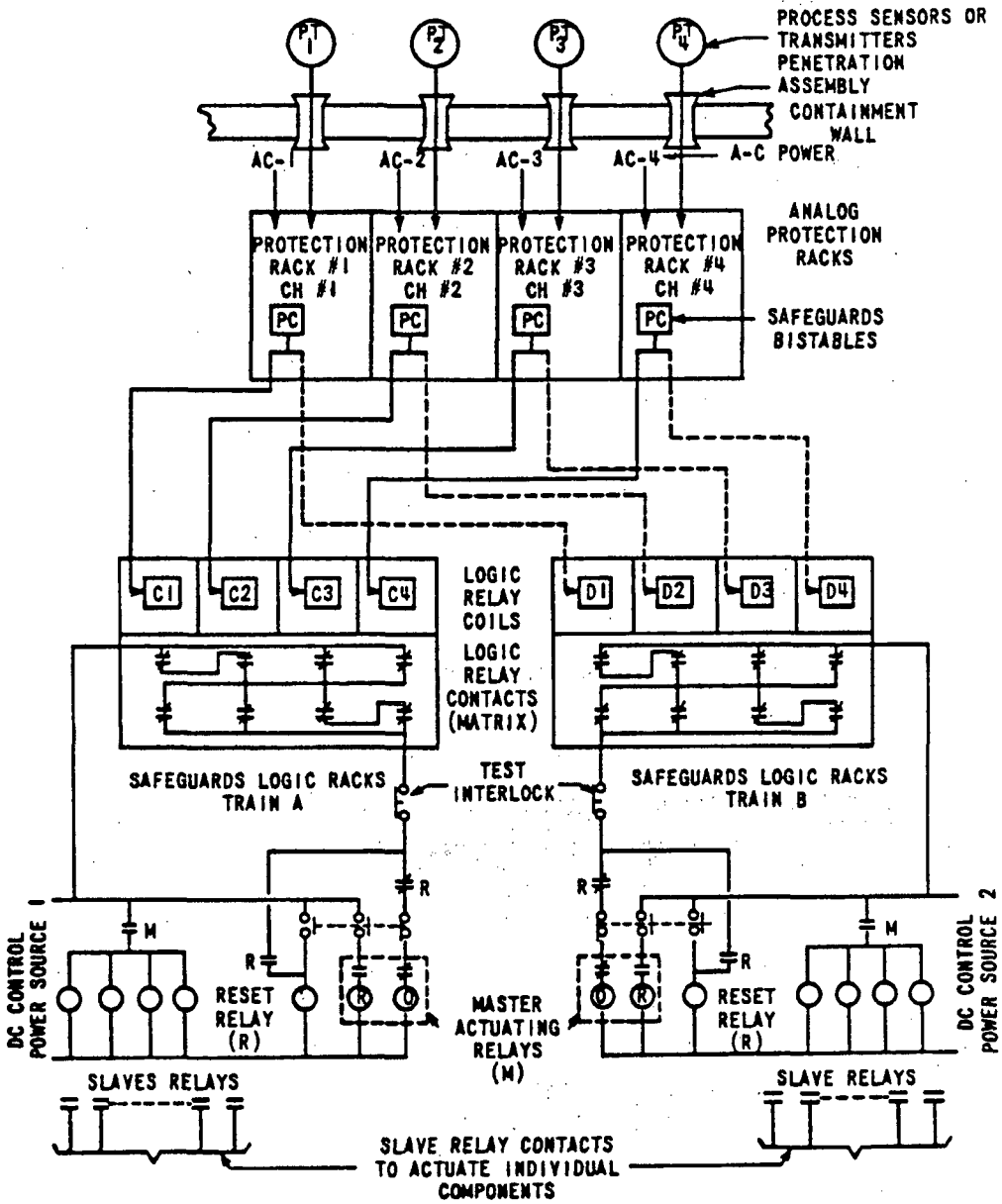

ROCHESTER GAS AND ELECTRIC CORPORATION
R.E. GINNA NUCLEAR POWER PLANT
UPDATED FINAL SAFETY ANALYSIS REPORT

Figure 7.3-4
Actuation Circuits of Engineered Safety Features

Figure 7.3-5 Figure DELETED

Figure Deleted

Figure 7.3-6 Analog and Logic Channel Testing

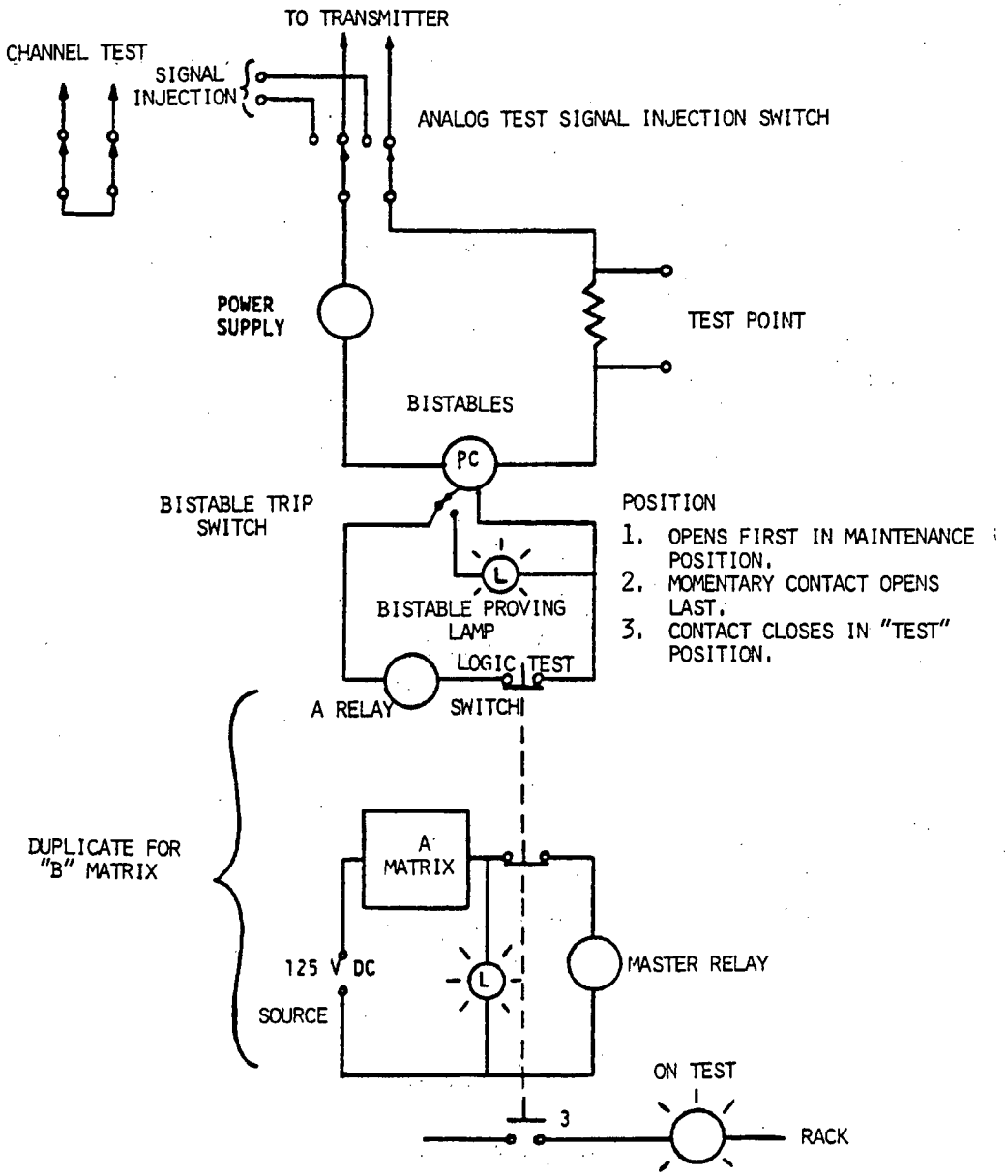

ROCHESTER GAS AND ELECTRIC CORPORATION R.E. GINNA NUCLEAR POWER PLANT UPDATED FINAL SAFETY ANALYSIS REPORT
Figure 7.3-6 Analog and Logic Channel Testing

7.4 SYSTEMS REQUIRED FOR SAFE SHUTDOWN

7.4.1 DESCRIPTION

In the Systematic Evaluation Program (SEP) review of safe shutdown systems for Ginna Station, the NRC Staff and RG&E developed a list of the minimum systems necessary to take the reactor from operating conditions to MODE 5 (Cold Shutdown). Although other systems may be used to perform shutdown and cooldown functions, the following list is the minimum number of systems required to fulfill the requirements of Branch Technical Position RSB 5-1 (*Reference 1*).

1. Reactor Trip System (RTS).
2. Auxiliary feedwater system.
3. Main steam system.
4. Service water (SW) system.
5. Chemical and volume control system.
6. Component cooling water (CCW) system.
7. Residual heat removal system.
8. Electrical instrumentation and power systems for the above systems.

Five basic tasks, or functions, are required to proceed from plant power operation to MODE 3 (Hot Shutdown) to MODE 5 (Cold Shutdown). These functions and their associated alternate methods are identified in Table 7.4-1.

7.4.1.1 Reactor Trip System (RTS)

The Reactor Trip System (RTS) is described in Section 7.2.

The Reactor Trip System (RTS) is designed on a channelized basis to achieve isolation and independence between redundant protection channels. Channel independence is carried throughout the system extending from the sensor to the relay providing the logic. Isolation of redundant analog channels originates at the process sensors and continues back through the field wiring and containment penetrations to the analog protection racks. When safety and control functions are combined, both functions are fully isolated in the remaining part of the channel, control being derived from the primary safety signal path through an isolation amplifier. As such, a failure in the control circuitry does not affect the safety channel. Reactor Trip System (RTS) channels are supplied with sufficient redundancy to provide the capability for channel calibration and testing at power. Bypass removal of one trip circuit is accomplished by placing that circuit in a half-tripped mode, i.e., a two-out-of-three circuit becomes a one-out-of-two circuit. Testing does not trip the system unless a trip condition concurrently exists in a redundant channel.

The power supplies to the channels are fed from four instrument buses. Two of the buses are supplied by constant voltage transformers and two are supplied by inverters. Each channel is energized from a separate ac power feed. Each reactor trip circuit is designed so that a trip occurs when the circuit is deenergized. An open circuit or the loss of channel power causes

the system to go into its trip mode. Reliability and independence are obtained by redundancy within each tripping function. In a two-out-of-three circuit, the three channels are equipped with separate primary sensors and each channel is energized from an independent electrical bus. A single failure may be applied in which a channel fails to deenergize when required; however, such a malfunction can affect only one channel. The trip signal furnished by the two remaining channels is unimpaired in this event.

7.4.1.2 Auxiliary Feedwater Systems

The auxiliary feedwater systems are described in Section 10.5.

The preferred auxiliary feedwater system is divided into two independent trains. There are two motor-driven pumps powered from separate redundant 480-V safeguards emergency buses which can receive power from either onsite or offsite sources. Each motor-driven pump can provide 100% of the preferred auxiliary feedwater system flow required for decay heat removal and can be cross-connected to provide flow to either steam generator. There is also a turbine-driven pump which can receive motive steam from each steam line and provide flow to either or both steam generators. The turbine-driven pump provides 200% of the flow required for decay heat removal.

A standby auxiliary feedwater system (SAFW) provides flow in case the preferred auxiliary feedwater system pumps are inoperable. The standby auxiliary feedwater system (SAFW) uses two motor-driven pumps which can be aligned to separate service water (SW) system loops. The standby auxiliary feedwater system (SAFW) has the same features as the preferred auxiliary feedwater system pumps with regard to functional capability and power supply separation. The system is manually actuated from the control room.

The standby pumps (SAFW) are electrically interlocked with the primary motor-driven pumps (MDAFW). The interlocks prevent inadvertent actuation of either standby pump when its associated motor-driven auxiliary feedwater pump (MDAFW) is available. Standby auxiliary feedwater pump (SAFW) C cannot be manually started if preferred motor driven auxiliary feedwater pump (MDAFW) A is operating, and standby pump D cannot be started if preferred motor driven auxiliary feedwater pump (MDAFW) B is operating. The primary purpose of the interlocks is to prevent both pumps (A and C or B and D) from being energized simultaneously and overloading the emergency diesel generator on loss of offsite power.

7.4.1.3 Main Steam System

The main steam system is described in Section 10.3.

The safety-grade shutdown components associated with the main steam system are the main steam isolation valves, the steam safety valves, and the steam atmospheric dump valves. Each of the two steam generators is equipped with an air-operated, solenoid-controlled main steam isolation valve, four steam safety valves, and one air-operated atmospheric dump valve. The main steam isolation valves will shut upon loss of control air. For core decay heat removal with natural circulation of the reactor coolant, only one steam generator and one of its four safety valves are required to remove core decay heat a few seconds after reactor trip. One atmospheric steam dump, which can be operated from the control room, is also sufficient

for maintaining MODE 3 (Hot Shutdown) or to achieve cooldown of the reactor coolant system below MODE 3 (Hot Shutdown) conditions.

Boiling of feedwater in the steam generator is the dominant mode of removing primary system heat. Normally, the energy in the steam is removed in the turbine and the main condenser. After the turbine is tripped, the turbine bypass system provides a controlled steam release directly to the condenser. The ultimate heat sink for the condenser is the circulating water system. When the condenser is not available, the steam is released directly to the atmosphere through either the steam safety valves or the atmospheric dump valves. As the steam is lost, a continuing source of feedwater is required.

7.4.1.4 Service Water System

The service water (SW) system is described in Section 9.2.1.

The service water (SW) system circulates water from the screen house to various heat exchangers and systems in the containment, auxiliary, and turbine buildings. The system has four pumps, three of which have the capacity to supply normal cooling loads. **One** pump is sufficient to supply essential loads **during the injection phase of a LOCA. Two pumps are sufficient to supply essential loads during the recirculation phase of an accident.** The service water (SW) system piping is arranged so that either pump train can provide flow to each essential load; through a single loop header; nonessential loads are automatically isolated on a safety injection (SI) signal concurrent with an associated 480-V safeguards bus undervoltage condition. Valving is provided to isolate any single active failure and to permit continued operation of the system. The service water (SW) system consists of a single loop header supplied by two separate, 100% capacity, safety related pump trains. The physical design of the service water system is such that one 100% capacity pump from each class 1E electrical bus (buses 17 and 18) is arranged on a common piping header which then supplies the service water (SW) loop header. A service water (SW) train is based on electrical source only. Motor-operated valves, which isolate nonessential service water (SW) system loads, as well as the system pumps, are operable from the control room. Power for the service water (SW) system pumps is provided by the 480-V safeguards emergency buses which can be supplied by onsite (emergency diesels) or offsite power. One service water (SW) system pump per emergency diesel is automatically started during postaccident diesel load sequencing.

7.4.1.5 Chemical and Volume Control System

The chemical and volume control system is described in Section 9.3.4.

The chemical and volume control system provides borated water from the boric acid storage tanks or from the refueling water storage tank (RWST) through three positive displacement charging pumps to the reactor coolant system. The capacity of one pump (60 gpm) is sufficient to compensate for contraction of the reactor coolant system coolant during normal cooldown. One charging pump alone or with one boric acid transfer pump can provide MODE 5 (Cold Shutdown) boration requirements following reactor shutdown. Borated water for the charging pumps can be controlled locally or from the control room. Power for the charging pumps is supplied via the emergency buses from either onsite or offsite power sources. The charging pumps discharge into a common pulse dampening accumulator. In

the event of a single failure in the common portion of the system, a redundant method of charging and boration exists by means of the high-pressure safety injection system. Any of the three high-pressure safety injection pumps can be lined up from the control room to take suction from the refueling water storage tank (RWST) and to inject borated water into the reactor coolant system via the high-pressure safety injection lines, once reactor coolant system pressure is reduced below 1500 psi.

7.4.1.6 Component Cooling Water System (CCW)

The component cooling water (CCW) system is described in Section 9.2.2.

The component cooling water (CCW) system consists of two pumps, two heat exchangers, a surge tank, and connecting valves and piping. During normal full power operation, one component cooling water pump and one component cooling water heat exchanger can accommodate the heat removal loads. The standby pump and heat exchanger provide 100% backup. Both pumps and both heat exchangers are utilized to remove the residual and sensible heat during plant shutdown. If one of the pumps or one of the heat exchangers is not operative, the time for cooldown is extended. The component cooling water (CCW) pumps receive power from the redundant 480-V safeguards emergency buses which can be supplied by onsite or offsite power. The component cooling water (CCW) system is normally operated from the control room. The surge tank accommodates expansion, contraction, and inleakage of water, and ensures a continuous component cooling water (CCW) supply until a leaking cooling line can be isolated. Because the surge tank is normally vented to the atmosphere, a radiation monitor in the component cooling system annunciates in the control room and closes a valve in the vent line in the event that the radiation level reaches a preset level above the normal background.

7.4.1.7 Residual Heat Removal System

The residual heat removal system is described in Section 5.4.5.

The residual heat removal system consists of a single drop line from the reactor coolant system hot leg through two redundant pumps and their associated heat exchangers and back to the reactor coolant system via a single header. Each pump can be manually cross-connected to the alternate heat exchanger for increased reliability. Normal cooldown of the reactor coolant system is accomplished by operating both pumps and heat exchangers; however, a lesser cooldown rate can be achieved with only one pump. With a lake temperature of 80°F or less, one heat exchanger can effect cooldown approximately 30 hr after shutdown. For a maximum lake temperature of 85°F, cooldown to cold shutdown conditions with one residual heat removal (RHR) heat exchanger would exceed 30 hr; however, cold shutdown conditions would still be reached in a reasonable period of time. Each residual heat removal pump is supplied with power from separate redundant 480-V safeguards emergency buses which can receive power from either onsite or offsite sources. The system is normally operated from the control room.

7.4.1.8 Electrical Instrumentation and Power Systems

Table 7.4-2 provides a list of the instruments required to conduct a safe shutdown. The list includes those instruments which provide information to the control room operator from which the proper operation of all safe shutdown systems can be inferred. These instruments show reactor coolant system pressure, reactor coolant system temperature, pressurizer level, and steam- generator level. Improper trending of these parameters would lead the operator to investigate the potential causes. Other instruments listed in the table provide the operator with a direct check on safe shutdown system performance and an indication of actual or impending degradation of system performance.

Offsite emergency power is provided by two independent transmission lines each connected to a separate station auxiliary (startup) transformer. A third (delayed access) source of offsite power can be made available via the unit auxiliary transformer by manually disconnecting flexible connections at the main generator terminals.

Onsite emergency power is furnished by two diesel-engine generating sets. Either diesel generator is capable of supplying sufficient safety loads. The diesel generators and loads are divided on a split-bus arrangement. There is no automatic tie between the two buses. Both diesels are started by a safety injection signal, and each diesel is started by an undervoltage condition at either of its 480-V safeguards buses. Each diesel can also be started locally or from the control room.

Table 7.4-3 lists the safe shutdown systems power source and location.

7.4.2 EVALUATION

In the SEP review of the safe shutdown systems for Ginna Station (Topic VII-3), the NRC staff noted that the systems required to take the reactor from MODE 3 (Hot Shutdown) to MODE 5 (Cold Shutdown) (assuming only offsite power is available or only onsite power is available with a single failure) are capable of initiation to bring the plant to safe shutdown and are in compliance with current licensing criteria and safety objectives. The staff concluded that with the installation of a redundant component cooling water (CCW) surge tank level indication (See Section 9.2.2.5), Ginna Station satisfies all of the requirements for safe shutdown, including GDC 17 (10 CFR 50, Appendix A), because of the number and quality of systems provided, an 8-hr battery capacity, and the capability to establish a delayed access line by backfeeding through the main transformer in less than 8 hours (*Reference 2*). See Section 8.2.2.2.3 for additional details.

7.4.3 EMERGENCY SHUTDOWN CONTROL

7.4.3.1 General

The control building, equipment, and furnishings have been designed so that the likelihood of fire or other conditions making the main control room inaccessible even for a short time is extremely small.

As a further measure to ensure safety, provisions have been made so that plant operators can shut down and maintain the plant in a safe condition by means of controls located outside the

control room. During such a period of control room inaccessibility, the reactor will be tripped and the plant maintained in the MODE 3 (Hot Shutdown) condition. If the period extends for a long time, the reactor coolant system can be borated to maintain shutdown as xenon decays.

Local controls located at the stations are to be utilized at times when attention is needed, and are within the capability of the plant operating crew. The plant intercom system provides communication among the personnel so that the operation can be coordinated.

The functions for which local control provisions have been made are listed below along with the type of control and location in the plant. Transfer of certain components to local controls is annunciated in the control room.

If the control room should be evacuated suddenly without any action by the operators, the reactor can be tripped by either of the following:

A. Open both reactor trip breakers at the reactor trip switch gear.

B. Open both MG set breakers at Buses 13 and 15.

Following evacuation of the control room, the following functions, systems, and equipment are provided to maintain the plant in a safe shutdown condition from outside the control room:

AA. Residual heat removal (Section 7.4.3.2).

BB. Reactivity control, i.e., boron injection to compensate for fission product decay (Section 7.4.3.3).

CC. Pressurizer pressure and level control (Section 7.4.3.4).

DD. Electrical systems as required to supply the above systems (Section 7.4.3.5).

EE. Other equipment, as described in Sections 7.4.3.2 through 7.4.3.7.

7.4.3.2 Residual Heat Removal

Following a normal plant shutdown, an automatic steam dump control system bypasses steam to the condenser and maintains the reactor coolant temperature at its no-load value. This implies the continued operation of the steam dump system, condensate circuit, condenser cooling water, preferred auxiliary feedwater pumps, and steam generator instrumentation. If the automatic steam dump control system is not available, independently controlled relief valves on each steam generator maintain the steam pressure. These relief valves are further backed up by code safety valves on each steam generator. The steam relief facility is adequately protected by redundancy and local protection. For decay heat removal, it is only necessary to maintain the control on one steam generator.

For the continued use of the steam generators for decay heat removal, it is necessary to provide a source of water of approximately 200 gpm, a means of delivering that water, and finally, instrumentation for pressure and level indication.

The normal source of water supply is the secondary feedwater circuit; this implies satisfactory operation of the condenser, air ejectors, condenser cooling circuit, etc. In addition to the normal feedwater circuit, the plant may use, as a backup, water from the condensate storage tanks, lake water via the service water (SW) system, or water provided from the yard fire hydrant loop.

Feedwater may be supplied to the steam generators by the preferred auxiliary feedwater pumps (two electric motor-driven and one steam turbine-driven) or the motor-driven standby auxiliary feedwater pumps (SAFW); these pumps and associated valves have local controls.

7.4.3.3 Reactivity Control

Following a normal plant shutdown to MODE 3 (Hot Shutdown) condition, soluble poison is added to the primary system to maintain subcriticality. For boron addition, the chemical and volume control system is used. Boration requires the use of the following:

A. Charging pumps and volume control tank, with boric acid transfer pumps and tanks, and associated piping; or the charging pumps could draw directly from the refueling water storage tank (RWST).

B. Regenerative heat exchanger, nonregenerative heat exchanger, and associated equipment component cooling and service water (SW) systems; or the steam generators could be used to remove decay heat, using auxiliary feedwater and steam dump.

C. Periodic operation of one main coolant pump, if available, or the auxiliary spray/heaters for pressurizer homogenization is desirable. However, natural circulation is acceptable.

D. Compressed air for valve operation; manual could be adopted if necessary.

With the reactor held at MODE 3 (Hot Shutdown) conditions, boration of the plant is not required immediately after shutdown. The xenon transient does not decay to the equilibrium level until some 10 to 15 hr after shutdown, and a further period would elapse before the 1% reactivity shutdown margin provided by the control rods had been cancelled. This delay would provide ample time for initiating boration.

7.4.3.4 Pressurizer Pressure and Level Control

Following a reactor trip, the primary temperature will automatically reduce to the no-load temperature condition as dictated by the steam generator temperature conditions. This reduction in the primary water temperature reduces the primary water volume and, if continued pressure control is to be maintained, makeup is required. This is supplied by the chemical and volume control system which also provides pressurizer level control in normal circumstances. This requires the charging pump for boration plus a borated water supply such as the normal boron regeneration equipment, the boric acid storage tanks, or the refueling water storage tank (RWST).

7.4.3.5 Electrical Systems

Offsite or onsite emergency power must be available to supply the above systems and equipment for the MODE 3 (Hot Shutdown) condition.

7.4.3.6 Startup of Other Equipment

The average ambient air temperature inside containment is maintained below 120°F. For this reason, the containment air recirculation fan coolers should be continued in operation, if possible.

At least one service water (SW) pump must normally be in operation while the diesel generators are operating. Hose connections have been installed from the fire water system to provide an alternate source of cooling water for the diesel generators that is independent of the service water (SW) system. (See Section 9.5.5.)

7.4.3.7 Indication and Controls Provided Outside the Control Room

The specific indication and controls provided outside the control room for emergency shutdown control are summarized as follows:

7.4.3.7.1 Local Panel Indication

A. The auxiliary feedwater pump panel provides indication of the following:
   - Steam generator wide-range water levels--the median of three wide-range level transmitters is displayed for each steam generator (2).
   - Steam generator pressures (2).
   - Pressurizer pressure.
   - Pressurizer level.

B. The feedwater bypass valve panel provides indication of steam generator wide-range water levels--the median of three wide-range level transmitters is displayed for each steam generator.

C. The charging pump panel provides indication of pressurizer level.

D. Standby auxiliary feedwater flow and pressure is provided in the standby auxiliary feedwater building.

E. The intermediate building emergency local instrument panel (near the turbine-driven auxiliary feedwater [AFW] pump) is a new panel installed in response to a 10 CFR 50 Appendix R review that provides the following indications.
   - Primary temperature--reactor coolant system loop A hot and cold leg.
   - Steam generator 1A wide-range level.
   - Steam generator 1A pressure.
   - Turbine-driven auxiliary feedwater flow.
   - Steam Generator 1B wide-range level.

F. Auxiliary building emergency local instrument panel installed in the charging pump room in response to the Appendix R review to provide for control of the primary coolant inventory. The panel provides the following indications.
   - Primary pressure.

- Pressurizer level.

G. Portable source range drawer to monitor neutron flux.

7.4.3.7.2 Local Motor Controls

Local stop/start pushbutton motor controls with a selector switch are provided at each of the following motors: motor-driven auxiliary feedwater pumps (MDAFW), charging pumps, and boric acid transfer pumps. The selector switch will transfer control of the switchgear from the control room to local at the motor. Placing the local selector switch in the local operating position will give an annunciator alarm in the control room and will turn out the motor control position lights on the control room panel.

A local start/stop switch and local/remote selector switch are located on the intermediate building emergency local instrument panel **(IBELIP)** for local control of the turbine-driven auxiliary feedwater pump turbine dc-lube-oil pump. **This panel may be powered by a portable DC diesel generator during a loss of both AC and DC plant power.**

Remote stop/start pushbutton motor controls with a selector switch are also provided for each of the containment air recirculation fan motors. These controls are grouped at one point in the intermediate building convenient for operation. The selector switch will transfer control of the switchgear from the control room to the remote point. Placing the selector switch to local operation will give an annunciator alarm in the control room and will turn out the motor control position lights on the control room panel.

Remote stop/start pushbutton motor controls with a selector switch located in the intermediate building were originally provided for each of the service water (SW) pump motors. In 1997, these controls were removed after an evaluation (*Reference 6*) yielded that a high energy line break (HELB) in the intermediate building could fail all dc control power to the service water (SW) pumps due to the existence of these controls and the associated wiring. Since local control for the service water (SW) pump motors was available at the 480 volt buses 17 and 18 located in the screen house, it was determined that the control devices in the intermediate building were not necessary.

Speed control is provided locally for the charging pumps. In the event of loss of instrument air to a charging pump pneumatic speed controller, the pump will reset to its low speed setting, supplying approximately 18 gpm, which is adequate to maintain reactor coolant system (RCS) inventory and minimum boric acid injection requirements.

7.4.3.7.3 Valve Control

A. Main feed regulators.

B. Auxiliary feed control valves. (These valves are operated locally at the preferred auxiliary feedwater pumps.)

C. Atmospheric dump. (Automatic control normally at MODE 3 (Hot Shutdown).)

D. All other valves requiring operation during MODE 3 (Hot Shutdown) can be locally operated at the valve.

E. Letdown orifices isolation valves operated locally to the charging pumps. Local stop and start buttons with selector switch and position lamp.

7.4.3.7.4 Pressurizer Heater Control

Stop and start buttons with selector switch and position lamp are located near the motor-driven auxiliary feedwater pumps (MDAFW) for the backup heater group.

7.4.3.7.5 Lighting

Emergency lighting is provided in all operating areas. Additional lighting has been installed as part of the RG&E alternative shutdown effort (see Section 7.4.4) and portable self-contained electric lights are available to the operators to ensure access to and egress from required locations.

7.4.3.7.6 Communications

The communication system provides for communication between local operating stations without the use of the control room. Also, hand-held radios are available for operating personnel communications.

7.4.3.7.7 Electrical Systems

In the event of a main control room evacuation, combined with a loss of offsite power, one diesel generator must be operable. The 1A diesel generator is provided with an emergency local control panel that permits local control of the diesel generator following evacuation of the control complex. The emergency local control panel is equipped with isolation switches, start and stop controls, voltmeter, ammeter, speed indicator, and additional alternative controls. The use of this local control panel is covered by Ginna Station procedures. In addition to this provision, a new breaker has been installed between the 1B diesel generator and 480-V safeguards bus 17 for protection against both diesel generators failing because of a fire-induced circuit failure at buses 17 and 18 in the screen house.

7.4.4 ALTERNATIVE SHUTDOWN SYSTEM

7.4.4.1 System Description

An alternative shutdown system concept has been developed in response to the requirements for fire protection as defined by 10 CFR 50.48 and 10 CFR 50, Appendix R. The objective of these requirements is to limit damage to safe shutdown systems resulting from an unmitigated fire to the extent that the ability to achieve safe shutdown is ensured. The description of the fire protection features to ensure safe-shutdown capability at Ginna Station and the relationship of these features to the above requirements are fully described in *Reference 3*. Approval of Ginna Station Appendix R compliance was given in *References 4* and *5*. See also Section 9.5.1.3.

Alternative shutdown capability is a means to safe shutdown provided by rerouting, relocating, or modifying existing safe shutdown systems to ensure the ability to achieve and maintain safe-shutdown conditions independent of the equipment associated with certain fire areas.

Safe shutdown is normally accomplished from the control room by utilizing the safe-shutdown equipment along with the other available equipment. Limited operator actions may be taken outside the control room for fires in specific fire areas. This is the preferred shutdown method and is defined as "normal safe shutdown."

If there is a fire in any fire area that has the potential to interfere with safe shutdown from the control room, the operators will proceed to the alternative shutdown stations if necessary. Reactor trip can be initiated and verified prior to evacuation, should it be necessary.

The following fire areas described as fire areas of concern contain control circuits for redundant sets of safe-shutdown equipment that do not meet Appendix R, Section III.G.2, requirements: the control complex, battery rooms 1A and 1B, cable tunnel, and auxiliary building basement/mezzanine (see *Reference 3* for area descriptions). The cable tunnel contains control circuits for most redundant safe-shutdown equipment. The auxiliary building basement/mezzanine level contains control circuits for all redundant components powered from either bus 14 or bus 16.

The alternative shutdown system provides alternative control stations for these areas. Alternative shutdown, controlled from the independent control stations, will ensure the achievement of all prescribed safe-shutdown functions given an unmitigated fire in any of the fire areas of concern. Remote plant locations have been designated as primary shutdown and support stations. These locations contain the necessary control and instrumentation to achieve and maintain the required safe-shutdown functions. A fire at these locations does not impair the achievement and maintenance of safe shutdown from the control room.

7.4.4.2 Alternative Shutdown Stations

The alternative shutdown stations at Ginna Station will provide the following capabilities.

7.4.4.2.1 Charging Pump Room (Primary Station) (see Section 7.4.3.7.1 F)

A. Transfer switch to isolate control circuits of charging pump 1A bus 14 power breakers from fire areas of concern.

B. Independent primary system pressure and pressurizer level indication to local indicator panel.

C. Independent Appendix R dc power source for the local indicator panel.

D. Local start/stop switches to operate charging pump 1A from this location.

E. Transfer switch to isolate the control power to bus 14 and supply charging pump 1A control circuit with alternative dc power.

F. A local air supply is available to allow full range of speed control for charging pump 1A from the local or remote controls for a minimum of one hour. This feature mitigates the postulated loss of instrument air due to failed soldered pipe joints in the fire area outside the charging pump room. After the fire is extiguished, instrument air supply to charging pump 1A can be restored via hoses connected to the service air system.

7.4.4.2.2 Intermediate Building North (Primary Station) (see Section 7.4.3.7.1 E)

A. Independent reactor coolant system loop temperature (A loop), steam generator level (Steam Generators A and B), steam generator pressure (Steam Generator A only), and turbine-driven auxiliary feedwater flow indication to local indicator panel.

B. Independent Appendix R dc power source for the local indicator panel.

C. Local operation of turbine-driven auxiliary feedwater pump turbine dc-lube-oil pump.

D. Local source range monitor hookup.

E. Local operation of turbine-driven auxiliary feedwater pump discharge valve.

7.4.4.2.3 Emergency Diesel Generator Area (Support Station) (see Section 7.4.3.7.7)

A. Transfer switches to isolate required control room control circuits (for emergency diesel generator 1A).

B. Alternative local diesel generator 1A start/stop speed and voltage control.

C. Alternative diesel generator 1A diagnostic instrumentation.

7.4.4.2.4 480-Volt Alternating Current Bus 14 (Support Station)

A. Local operation of emergency diesel generator 1A feeder breaker (52/EG 1A1) and isolation of dc control power to the control circuit.

B. Local operation of bus 12 feeder breaker (bus 14 480-V feed from 4160-V distribution).

C. Manual stripping of all non-safe-shutdown loads.

7.4.4.2.5 Battery Rooms 1A and 1B (Support Station)

Operation of breakers at main fuse cabinets 1A and 1B and main dc distribution panels 1A and 1B to

A. Verify required power supply to turbine building dc distribution panel.

B. Verify required power supply to auxiliary building distribution panels 1A and 1B.

C. Verify required power supply to emergency diesel generator 1A and 1B dc distribution panels.

D. Align technical support center battery to main fuse cabinets 1A and 1B for long-term dc supply, if necessary. This should only be used if both the A and B dc power train battery chargers are not operable and both A and B trains are used for process instrumentation for long term cooldown.

E. Isolate dc control power to potential spurious operation components.

7.4.4.2.6 Motor Control Centers 1C and 1D (Support Station)

Isolation of motive power to potential spurious operation components.

7.4.4.2.7 480-Volt Alternating Current Bus 18 (Support Station)

A. Local operation of emergency diesel generator 1A feeder breaker (52/EG 1A2) and isolation of dc control power to the control circuit.

B. Local operation of feeder breaker (bus 18 480-V feed from 4160-V distribution) and isolation of dc control power to the control circuit.

C. Local operation of the feeder breaker for service water (SW) pump 1A and isolation of dc control power to the control circuits.

7.4.4.2.8 Selected Safe Shutdown Systems

Table 7.4-4 lists the safe shutdown systems selected for alternative shutdown, the applicable alternative shutdown control stations and their locations, and the alternative shutdown functions served by each system.

REFERENCES FOR SECTION 7.4

1. U.S. Nuclear Regulatory Commission, Branch Technical Position, RSB 5-1, Design Requirements of the Residual Heat Removal System, Revision 1.

2. U.S. Nuclear Regulatory Commission, Safety Evaluation Report Related to the Full-Term Operating License for R. E. Ginna Nuclear Power Plant, NUREG 0944, October 1983.

3. R. E. Ginna Nuclear Power Plant Appendix R Alternative Shutdown System Report.

4. Letter from J. A. Zwolinski, NRC, to R. W. Kober, RG&E, Subject: Safety Evaluation for Appendix R, Items III.G.3 and III.L, dated February 27, 1985.

5. Letter from J. A. Zwolinski, NRC, to R. W. Kober, RG&E, Subject: Exemptions to Section III.G of Appendix R, dated March 21, 1985.

6. SEV-1086, Removal of Service Water Pump Remote Control Switches from Control Circuits, PCR 96-121, dated December 2, 1996.

Table 7.4-1
FUNCTIONS FOR SHUTDOWN AND COOLDOWN

Function	Method
Control of reactor power	Boration
	Chemical and volume control system
	High-pressure safety injection
	Control rods
	Controlled rod insertion
	Reactor trip
Core heat removal	Forced circulation (reactor coolant pumps)
	Natural circulation (using steam generators)
	Residual heat removal
	Chemical and volume control system letdown heat exchangers
	Pressurizer safety valves and safety injection
Steam generator heat removal	Main condenser (circulating water system)
	Atmospheric dumps (manual actuation)
	Safety valves
	Auxiliary feed system turbine
	Steam-generator blowdown
	Water-solid steam generator
Feedwater	Main feedwater pumps
	Steam- and motor-driven auxiliary feedwater pumps (TDAFW/ MDAFW)
	Standby auxiliary feedwater (SAFW) pumps
Primary system control	Chemical and volume control system
	Pressurizer safety valves

Table 7.4-2
SAFE SHUTDOWN INSTRUMENTS

Component/System	Instrument	Instrument Location
Main steam	Steam generator level LT & LI 460, 461, 470, and 471	LT inside containment LI control room[a]
Reactor coolant	Pressurizer level LT & LI 426, 427, 428 LT 433; LI 433A	LT inside containment LI control room[a]
	Pressurizer pressure PT & PI 449, 429, 430, 431	PT inside containment PI control room[a]
	Reactor coolant system temperature TE 409A-1; TI 409A-1 TE 409B-1; TI 409B-1 TE 410A-1; TI 410A-1 TE 410B-1; TI 410B-1	TE inside containment TI control room
Auxiliary feed	Preferred auxiliary feedwater system (AFW) flow FT 2001, 2002, 2006, 2007 FI 2021A, 2022A, 2023A, 2024A	FT intermediate building FI control room[a]
	Standby auxiliary feedwater system (SAFW) flow	FT auxiliary building addition

Component/System	Instrument	Instrument Location
	FT 4084 & 4085 FI 4084B & 4085B	FI control room[a]
Service water	Pump discharge pressure	PT screen house
	PT 2027 & 2028 PI 2160 & 2161	PI control room
Chemical and volume control	Charging flow	FIT auxiliary building
	FIT 128, FI 128, FI 128B	FI control room
	Seal injection flow[b]	FIT and FT auxiliary building
	FIT 115, 116 FT 115A, 116A FI 115A, 116A	FI control room
	Refueling water storage tank (RWST) level	LT auxiliary building with indications in the control room
	LT 920, LT 921	
Component cooling water (CCW)	System flow	FIT auxiliary building
	FIT 619	Low flow alarm in control room
	Surge tank level	LIT auxiliary building with alarms in control room
	LIT 618, LAH 618A, LAL 618B	
Residual heat removal	System flow	FT auxiliary building
	FT 626, FI 626 FT 689, FI 689	FI control room

Component/System	Instrument	Instrument Location
Diesel generator	Generator output voltage and current	Control room
Emergency ac power	480-V buses 14, 16, 17, 18, voltage indication	Control room
Emergency dc power	125-V dc buses 1 and 2 voltage indication	Control room

a. Some indicators are also available at local shutdown panels.

b. Seal injection flow indication is not required for safe shutdown. The RCP seal injection flow instrumentation is nonseismic except for the pressure boundary portion, which is Seismic Category I.

Table 7.4-3
SAFE SHUTDOWN SYSTEMS POWER SOURCE AND LOCATION

System	Power Source	Location Building (Elevation)
Reactor protection		
Breakers	dc power	Control room (289 ft)
Bistables	Instrument buses	
Main steam		
Safety valves	---	Intermediate building (278 ft)
Isolation valves	Air (fail closed)	Intermediate building (278 ft)
Atmospheric dump valves	Air, nitrogen bottles, or manual	Intermediate building (278 ft)
Auxiliary feed		
Motor-driven pumps A, B	A bus 14; B bus 16	Intermediate building (253 ft)
Turbine-driven pump	Not applicable	Intermediate building (253 ft)
Standby pumps C, D	C bus 14; D bus 16	Auxiliary building addition (270 ft)
Service water pumps A, B, C, D	A, C bus 18; B, D bus 17	Screen house (253 ft)
Chemical and volume control (charging) pumps A, B, C	A bus 14 B; C bus 16	Auxiliary building (235 ft) east
Refueling water storage tank (RWST)	---	Auxiliary building
Component cooling water		

System	Power Source	Location Building (Elevation)
Pumps A, B	A bus 14; B bus 16	Auxiliary building (271 ft)
Heat exchangers	---	Auxiliary building (271 ft)
Residual heat removal		
Pumps A, B	A bus 14; B bus 16	Auxiliary building (219 ft) residual heat removal pit
Heat exchangers	---	Auxiliary building (235 ft)
Diesel generators 1A, 1B	125-V dc control power	Diesel room north side of turbine building (253 ft)
480 V, bus 14	Diesel 1A or offsite power	Auxiliary building (271 ft)
480 V, bus 16	Diesel 1B or offsite power	Auxiliary building (263 ft)
480 V, bus 17	Diesel 1B or offsite power	Screen house (253 ft)
480 V, bus 18	Diesel 1A or offsite power	Screen house (253 ft)
Instrument buses 1A, 1B, 1C, 1D	1A-inverter 1 and 1B-480-V motor control center 1C-inverter 2 and 1D-480-V motor control center	Control room (289 ft)
Battery and inverter 1A	---	Battery room 1A (253 ft)
Battery and inverter 1B	---	Battery room 1B (253 ft)

Table 7.4-4
APPENDIX R ALTERNATIVE SHUTDOWN METHODS AND CONTROL LOCATIONS

Safety Functions	System	Control Location	Comments
Reactivity control/scram	Reactor pressure - manual or auto	Control room	Scram initiated prior to control room evacuation.
Primary makeup capability	Chemical and volume control	Charging pump room (elevation 235 ft)	Local control of charging pump 1A to provide makeup.
		Local valves	Manual closure of pressure boundary and reactor coolant system inventory valves.
Primary pressure control	Chemical and volume control	Charging pump room (elevation 235 ft)	Local control of charging pump 1A to provide increase in reactor coolant system pressure.
	Reactor coolant	NA	Automatic operation of primary code safety valves.
Decay heat removal	Turbine driven auxiliary feedwater (TDAFW)	Intermediate building (elevation 253 ft 6 in.)	Local control of lube-oil pump, discharge valve, and turbine.
	Standby auxiliary feedwater (SAFW)	Control room (elevation 289 ft 6 in.)	Standby auxiliary feedwater system (SAFW) used with underground yard fire water supply in case of service water loss to turbine driven auxiliary feedwater (TDAFW) system.
Process monitoring	Process monitoring	Charging pump room (elevation 235 ft)	Monitor primary pressure and pressurizer level indication at local panel. Power supplied from new inverter powered from auxiliary building distribution panel.

Safety Functions	System	Control Location	Comments
		Intermediate building (elevation 253 ft 6 in.)	Monitor primary temperature, steam-generator pressure and level, and turbine driven auxiliary feedwater pump (TDAFW) flow at local panel. Power supplied from new inverter powered from new dc feed from turbine building dc-distribution panel. Spare neutron monitor panel installed at penetration before MODE 5 (Cold Shutdown).
Support services	Emergency power system	Emergency diesel generator areas (elevation 253 ft 6 in.)	Transfer of EDG 1A control and necessary diagnostic instrumentation locally.
		Auxiliary building operating level (elevation 271 ft)	Local control of bus 14 feeder breaker (from EDG 1A) at bus 14.
		Technical support center (elevation 271 ft of fire area AVT)	Local control of technical support center diesel generator to supply long-term dc power.
		Turbine building (elevation 253 ft 6 in.)	Local operation of technical support center vital battery manual throwover switch to provide main fuse cabinet 1A or 1B with dc power from technical support center battery charger.
		Battery room 1A or 1B (elevation 253 ft 6 in.)	Local operation of technical support center vital battery fused disconnect switch to provide main fuse cabinet 1A and/or 1B with dc power from technical support center battery charger.

Safety Functions	System	Control Location	Comments
		Plant yard (elevation 271 ft)	Local connection between underground yard fire water hydrant and emergency diesel generator using fire hose to provide alternative emergency diesel generator cooling. Local connection between standby auxiliary feedwater system (SAFW) and underground yard fire water hydrant using fire hose to provide alternative auxiliary feedwater in the event of service water loss.

7.5 SAFETY-RELATED DISPLAY INSTRUMENTATION

Process variables required on a continuous basis for the startup, operation, and shutdown of the unit are indicated, recorded, and controlled from the control room. The quantity and types of process instrumentation provided ensure safe and orderly operation of all systems and processes over the full operating range of the plant.

Certain controls that require a minimum of operator attention, or are only in use intermittently, are located on local control panels near the equipment to be controlled. Monitoring of the alarms of such control systems is provided in the main control room.

7.5.1 CONTROL ROOM

7.5.1.1 Description

7.5.1.1.1 General

Alarms and annunciators in the control room provide the operators with a warning of abnormal plant conditions that might lead to damage of components, fuel, or other unsafe conditions. Other displays and recorders are provided for indication of routine plant operating conditions and for the maintenance of records.

7.5.1.1.2 Main Control Board

Consideration is given to the fact that certain systems normally require more attention from the operator. The control system, therefore, is centrally located on the three-section board. Figure 7.5-1 shows the control room layout for the unit. The control board is divided into relative areas to show the location of control components and information display pertaining to various subsystems.

On the center section of the control board is the cathode ray tube (CRT) display for the microprocessor rod position indication system. The microprocessor rod position indication system monitors the position of all rods and causes a rod deviation alarm to be generated by the plant process computer system (PPCS) to alert the operator should an abnormal condition exist for any individual control rod. Displayed in this same area is nuclear instrumentation information required to start up and operate the reactor. Control rods are manipulated from the left section.

Variables associated with operation of the secondary side of Ginna Station are displayed and controlled from the center section of the control board. These variables include steam pressure, feedwater flow, main feedwater and feedwater bypass valve position, steam generator wide and narrow range level, steam flow, motor- and turbine-driven auxiliary feedwater pump flow, and other signals involved in the plant control system. The center section of the control board also contains provisions for indication and control of the reactor coolant system. Redundant indication is incorporated in the system design since pressure and temperature variables of the reactor coolant system are used to initiate safety features. Control and display equipment for station auxiliary systems is also located here.

The engineered safety features systems are controlled and monitored from the left section of the control board. Valve-position indicating lights are provided as a means of verifying the proper operation of the control and isolation valves following initiation of the engineered safety features. Control switches located on this panel allow manual operation or test of individual units. Also located on this section are the control switches, indicating lights, and meters for fans and pumps required for emergency conditions.

Controls and indications for all ventilation systems and containment isolation are located on the left section of the control board. A containment isolation and containment ventilation isolation reset panel has been installed near the radiation monitoring rack.

In addition, mounted on the right-hand section of the control board are the auxiliary electrical system controls required for manual switching between the various power sources described in Section 8.2.2.

Postaccident monitoring by use of the existing instrumentation is described in the Plant Procedures. All safety-related valves have position indication on the control board termed "status lights" and, in most cases, the valve position is also indicated by red and green lights over the valve control switch. The status lights are white. Valves that are in the safeguards position cause the corresponding status lights to be bright. Valves in the nonsafeguards position cause the corresponding status lights to be dim. The status lights are controlled by the valve control switches.

See Table 6.3-7 for a listing of instrumentation readouts available to the operator in the control room during the recirculation phase of safety injection.

7.5.1.1.3 Other Control Room Displays

To maintain the desired accessibility for control of the station, miscellaneous recorders not required for station control are located on the vertical recorder board where they are visible to the operator. Radiation monitoring information also is indicated there.

Computer readout and input handling facilities are located in the control room, facing the main control board. The operator will have close access to these facilities, which will aid in the safe and reliable operation of the plant. The computer is isolated from control circuits, and therefore any computer troubles will not affect control. The computer is only an aid to the operator and is not required for operation of the plant.

Audible alarms will be sounded in appropriate areas throughout the station if high radiation conditions are present at the continuous air monitor.

The auxiliary benchboard includes the fire panel section and the control room habitability section. The fire panel section includes controls and indicators for certain components of the fire protection system. The control room habitability section includes certain controls and indicators for the control room HVAC system.

7.5.1.2 Design Review

Rochester Gas and Electric Corporation has conducted a control room design review program in response to NUREG 0737, Supplement 1, which required a detailed control room design review to identify and correct design deficiencies, and NUREG 0700, which provided human engineering guidelines. The program emphasized determination of the adequacy of information available to the operator to effectively mitigate emergency conditions and was also designed to improve controls and displays that were determined not to conform with good human factors practices. The review scope encompassed known future control room design changes (e.g., new plant process computer and safety parameter display systems) as well as the existing design. The NRC evaluated the detailed control room design review (DCRDR) program for Ginna and concluded in the Staff Safety Evaluation Report (*Reference 1*) that the program satisfied all DCRDR requirements of Supplement 1 to NUREG 0737.

7.5.2 SAFETY PARAMETER DISPLAY

The requirements for safety parameter display are contained in Regulatory Guide 1.97, Revision 3, as well as in NUREG 0737, Supplement 1.

Regulatory Guide 1.97, Revision 3, lists the minimum variables that should be available to control room personnel during and following an accident. NUREG 0737 requires that sufficient information be presented in order that emergency operating procedures may be carried out.

The NRC evaluated Rochester Gas and Electric's position relative to the guidance provided in Regulatory Guide 1.97, Revision 3, and concluded in the staff safety evaluation report (*Reference 2*) that Rochester Gas and Electric either conforms to or has provided acceptable justification for deviation from the guidance of Regulatory Guide 1.97. Instrumentation associated with postaccident neutron flux monitoring received separate NRC approval by *Reference 5*. Table 7.5-1 provides a comparison of Ginna Station postaccident instrumentation to Regulatory Guide 1.97, Revision 3, criteria, with the exception of those items removed by subsequent licensing basis changes (*References 6 and 7*).

The selection of NUREG 0737, Supplement 1, Post Accident Monitoring (PAM) Instrumentation parameters, is discussed in a detailed safety analysis and implementation plan submitted to the NRC on November 30, 1984 (*Reference 3*).

See Section 7.7.6 for a discussion of the plant process computer system (PPCS) and safety parameter display system (SPDS). The safety parameter display system (SPDS) meets the requirements of NUREG 0737, Supplement 1, for a Post Accident Monitoring (PAM) Instrumentation (*Reference 4*). The SPDS is integrated in the plant process computer system (PPCS).

REFERENCES FOR SECTION 7.5

1. Letter from A. R. Johnson, NRC, to R. C. Mecredy, RG&E, Subject: Safety Evaluation on the Ginna Detailed Control Room Design Review, dated June 14, 1990.

2. Letter from A. R. Johnson, NRC, to R. C. Mecredy, RG&E, Subject: Emergency Response Capability - Conformance to Regulatory Guide 1.97, Revision 3, dated February 24, 1993.

3. Letter from R. W. Kober, RG&E, to J. A. Zwolinski, NRC, Subject: NUREG 0737, Supplement 1, SPDS Parameter Safety Analysis, dated November 30, 1984.

4. Letter from A. R. Johnson, NRC, to R. C. Mecredy, RG&E, Subject: Response to NRC Generic Letter 89-06 on the Safety Parameter Display System [Post Accident Monitoring (PAM) Instrumentation] for Rochester Gas and Electric Corporation, dated June 29, 1990.

5. Letter from A. R. Johnson, NRC, to R. C. Mecredy, RG&E, Subject: Conformance to Regulatory Guide 1.97, Revision 2, Post-Accident Neutron Flux Monitoring Instrumentation, dated November 27, 1995.

6. Letter from Robert Clark (NRC) to Robert Mecredy (RG&E), R. E. Ginna Nuclear Power Plant-Amendment Re: Elimination of Post Accident Sampling System (TAC No. MB3387), dated January 17, 2002.

7. Letter from Donna Skay (NRC) to Maria Korsnick (Ginna), R. E. Ginna Nuclear Power Plant-Amendment Eliminating Requirements for Hydrogen Recombiners and Hydrogen Monitors using the Consolidated Line Item Improvement Process (TAC No. MC4195), dated May5, 2005.

Table 7.5-1
COMPARISON OF GINNA STATION POSTACCIDENT INSTRUMENTATION TO REGULATORY GUIDE 1.97, REVISION 3, CRITERIA

Table 7.5-1 consists of 13 entries for each variable: a sequential number (#), the variable type (TYPE), the variable description (VARIABLE), category (CAT), range (RANGE), the equipment environmental qualification status (EEQ), seismic qualification status (SEISMIC), the quality assurance program classification of the equipment (QA), the power source for the channel (P.S.), whether or not there is control room indication of the variable (CR IND), whether or not recording is provided via discrete recorders (CHART), or the plant process computer (COMP), and any comments on the variable (COMMENTS). Entries in bold are from Regulatory Guide 1.97, Revision 3. Entries below each bold entry depict Ginna Station configurations. Any entries in parentheses represent proposed configurations not currently installed. Details relating to each superscript are listed at the end of this table.

										RECORDER[a]		
#	TYPE[b]	VARIABLE	CAT.[c]	RANGE	EEQ[d]	SEISMIC[d]	QA[e]	P.S.[f]	C.R. IND.[g]	CHART	COMP	COMMENTS
1	n.a.	**Auxiliary Feedwater Flow**	**1**	**Plant Specific**	**Yes**	**Yes**	**Full**	**1E**	**Yes**	**Plant Specific**		
	A	FT-2001 (MDAFW/SGA)	1	0-275 gpm (0-138%)	Mild	Yes	SR	1A	FI-2021A	No	F2021	Two per redundant function provided Also satisfies item #69
		FT-2013 (MDAFW/SGA)	1	0-275 gpm (0-138%)	Mild	Yes	SR	1C	FI-2029	No	F2029	
		FT-2002 (MDAFW/SGB)	1	0-275 gpm (0-138%)	Mild	Yes	SR	1C	FI-2022A	No	F2022	
		FT-2014 (MDAFW/SGB)	1	0-275 gpm (0-138%)	Mild	Yes	SR	1A	FI-2030	No	F2030	
		FT-2006 (TDAFW/SGA)	1	0-500 gpm (0-125%)	Mild	Yes	SR	1C	FI-2023A	No	F2023	
		FT-2007 (TDAFW/SGB)	1	0-500 gpm (0-125%)	Mild	Yes	SR	1A	FI-2024A	No	F2024	
2		**Deleted**										
3	n.a.	**Core Exit Thermocouples**	**1**	**Plant Specific**	**Yes**	**Yes**	**Full**	**1E**	**Yes**	**Plant Specific**		
	A	T1-T39	1	0-2300°F	Yes	Yes	SR	1A 1C	CETA CETB	No	Yes	39 CETs are provided. Technical Specifications require a minimum of four operable per quadrant. 19 CETs are associated with the A train and 20 with the B train. Also satisfies items #30, 37
4		**Deleted**										
5		**Deleted**										
6	n.a.	**Containment Pressure**	**1**	**Plant Specific**	**Yes**	**Yes**	**Full**	**1E**	**Yes**	**Plant Specific**		
	A	PT-945	1	0-60 psig	Yes	Yes	SR	1A	PI-945	No	P0945	Also satisfies items #35, 41
		PT-946	1	10-200 psia	Yes	Yes	SR	1B	PI-946	No	P0946	
		PT-947	1	0-60 psig	Yes	Yes	SR	1C	PI-947	No	P0947	
		PT-948	1	10-200 psia	Yes	Yes	SR	1C	PI-948	No	P0948	
		PT-949	1	0-60 psig	Yes	Yes	SR	1B	PI-949	No	P0949	
		PT-950	1	10-200 psia	Yes	Yes	SR	MQ-483	PI-950	No	No	

7	**n.a.**	**Condensate Storage Tank (CST) Level**	**1**	**Plant Specific**	**Yes**	**Yes**	**Full**	**1E**	**Yes**	**Plant Specific**		
	A	LT-2022A (tank A) LT-2022B (tank B)	1 1	0-24 ft 0-24 ft	Mild Mild	Yes Yes	SR SR	1A 1C	LI-2022A LI-2022B	No No	L2022A L2022B	The transmitters are not located in a Seismic Category I building. The tanks are connected by a locked open 10-in. line.
8	**n.a.**	**Pressurizer Pressure**	**1**	**Plant Specific**	**Yes**	**Yes**	**Full**	**1E**	**Yes**	**Plant Specific**		
	A	PT-429 PT-430 PT-431 PT-449	1 1 1 1	1700-2500 psig 1700-2500 psig 1700-2500 psig 1700-2500 psig	Yes Yes Yes Yes	Yes Yes Yes Yes	SR SR SR SR	1A 1B 1C 1D	PI-429 PI-430 PI-431 PI-449	PR-429 PR-429 PR-429 PR-429	P0429 P0430 P0431 P0449	PR-429 has the capability of recording any one of the four channels at a time (switch selectable). Although channel PT-449 is not powered from a safety-related supply, it is maintained as a Category 1 variable in all other aspects. Its protection signals are failsafe.
9	**n.a.**	**Pressurizer Level**	**1**	**Plant Specific**	**Yes**	**Yes**	**Full**	**1E**	**Yes**	**Plant Specific**		
	A	LT-426 LT-427 LT-428	1 1 1	0-100% 0-100% 0-100%	Yes Yes Yes	Yes Yes Yes	SR SR SR	1A 1B 1C	LI-426 LI-427 LI-428	LR-428 LR-428 LR-428	L0426 L0427 L0428	Level instrumentation does not cover the hemispherical top and bottom of the pressurizer. Also satisfies item #60
10		**Deleted**										
11	**n.a.**	**RCS Cold Leg Temperature**	**1**	**Plant Specific**	**Yes**	**Yes**	**Full**	**1E**	**Yes**	**Plant Specific**		
	A	TE-409B-1 (Loop A) TE-410B-1 (Loop B)	1 1	0-700°F 0-700°F	Yes Yes	Yes Yes	SR SR	1A 1C	TI-409B-1 TI-410B-1	RK-3 RK-3	T0409B T0410B	Also satisfies item #28
12		**Deleted**										
13	**n.a.**	**RCS Pressure**	**1**	**Plant Specific**	**Yes**	**Yes**	**Full**	**1E**	**Yes**	**Plant Specific**		
	A	PT-420 PT-420A	1 1	0-3000 psig 0-3000 psig	Yes Yes	Yes Yes	SR SR	1A 1C	PI-420 PI-420A	No PR-420A	P0420 P0420A	Also satisfies items #29,40
14	**n.a.**	**RHR Flow (Low Pressure Injection)**	**1**	**Plant Specific**	**Yes**	**Yes**	**Full**	**1E**	**Yes**	**Plant Specific**		
	A	FT-626 FT-689 FT-931A (Loop A)* FT-931B (Loop B)*	1 1 1 1	0-4000 gpm 0-4000 gpm 0-2200 gpm 0-2200 gpm	Yes Yes Yes Yes	Yes Yes Yes Yes	SR SR SR SR	1C 1A 1B 1C	FI-626 FI-689 FI-931A FI-931B	No No No No	F0626 F0689 No No	*FT-931A and FT-931B monitor RHR flow to containment spray and SI pumps suction. Also satisfies items #49, 56

15	**n.a.**	**Reactor Vessel Level Indication System**	**1**	**Plant Specific**	**Yes**	**Yes**	**Full**	**1E**	**Yes**	**Plant Specific**		
	A	LT-490A LT-490B	1 1	0-100% 0-100%	Yes Yes	Yes Yes	SR SR	1A 1C	LI-490A LI-490B	No No	L0496A L0496B	RVLIS receives 'correction' inputs from sensor line temperature, RCP status, RHR flow, SI flow, CETs, RCS pressure, and Tcold. Where both channels have common inputs the input signals to each channel are isolated. Also satisfies item #31
16	**n.a.**	**Refueling water storage tank (RWST) Level**	**1**	**Plant Specific**	**Yes**	**Yes**	**Full**	**1E**	**Yes**	**Plant Specific**		
	A	LT-920 LT-921	1 1	0-100% 0-100%	Mild Mild	Yes Yes	SR SR	1C* 1A	LI-920 LI-921	No No	L0920 L0921	*Computer indication of this channel also requires power from 1A. Also satisfies item #57
17		**Deleted**										
18	**n.a.**	**Steam Generator Wide Range Level**	**1**	**Plant Specific**	**Yes**	**Yes**	**Full**	**1E**	**Yes**	**Plant Specific**		**Two Per Steam Generator Required for Two Loop Plants**
	A	LT-504 (SG A) LT-505 (SG A) LT-506 (SG B) LT-507 (SG B)	1 1 1 1	0-100% 0-100% 0-100% 0-100%	Yes Yes Yes Yes	Yes Yes Yes Yes	SR SR SR SR	1A 1C 1A 1C	LI-504 LI-505 LI-506 LI-507	LR-504 LR-505 LR-506 LR-507	L0504 L0505 L0506 L0507	Two per steam generator provided. Also satisfies item #65
19	**n.a.**	**Steam Generator Narrow Range Level**	**1**	**Plant Specific**	**Yes**	**Yes**	**Full**	**1E**	**Yes**	**Plant Specific**		
	A	LT-461 (SG A) LT-462 (SG A) LT-463 (SG A) LT-471 (SG B) LT-472 (SG B) LT-473 (SG B)	1 1 1 1 1 1	0-100% 0-100% 0-100% 0-100% 0-100% 0-100%	Yes Yes Yes Yes Yes Yes	Yes Yes Yes Yes Yes Yes	SR SR SR SR SR SR	1A 1C 1D 1D 1A 1B	LI-461 LI-462 LI-463 LI-471 LI-472 LI-473	Yes* Yes* Yes* Yes* Yes* Yes*	L0461 L0462 L0463 L0471 L0472 L0473	*Median of three channels per generator is recorded. Although channels LT-463 and LT-471 are not powered from a safety-related supply, they are maintained as Category 1 variables in all other aspects. Also satisfies item #65
20	**n.a.**	**Steam Generator Pressure**	**1**	**Plant Specific**	**Yes**	**Yes**	**Full**	**1E**	**Yes**	**Plant Specific**		
	A	PT-468 (SG A) PT-469 (SG A) PT-478 (SG B) PT-479 (SG B) PT-482 (SG A) PT-483 (SG B)	1 1 1 1 1 1	0-1400 psig 0-1400 psig 0-1400 psig 0-1400 psig 0-1400 psig 0-1400 psig	Yes Yes Yes Yes Yes Yes	Yes Yes Yes Yes Yes Yes	SR SR SR SR SR SR	1A 1B 1C MQ-483 1C 1B	PI-468 PI-469 PI-478 PI-479 PI-482A PI-483A	No No No No No No	P0468 P0469 P0478 P0479 P0482 P0483	Also satisfies item #66
21		**Deleted**										

22	**n.a.**	**RCS Subcooling Monitor**	**1**	**Plant Specific**	**Yes**	**Yes**	**Full**	**1E**	**Yes**	**Plant Specific**		
	A	TI-409A TI-410A	1 1	0-100°F subcooled 0-100°F subcooled	Yes Yes	Yes Yes	SR SR	1A 1C	TI-409A TI-410A	No No	*TSUBA *TSUBB	*Ginna EOPs provide the means for determining subcooling based on CETs and RCS pressure. The SPDS/PPCS also calculates subcooling using these variables. Both capabilities exceed the range recommended in RG 1.97, Rev. 3. Also satisfies item #32.
23	**n.a.**	**Containment Sump Wide Range Level**	**1**	**Plant Specific**	**Yes**	**Yes**	**Full**	**1E**	**Yes**	**Plant Specific**		
	A	LC-942 (A-E) LC-943 (A-E)	1 1	8, 78, 113, 180, 214 in. 8, 78, 113, 180, 214 in.	Yes Yes	Yes Yes	SR SR	1A 1C	Yes Yes	No No	Yes Yes	Five discrete level switches per channel, 214-in. indication corresponds to approximately 500,000 gal. Also satisfies items #34, 43
24	**B**	**Neutron Flux**	**1**	**1E-6-100% Power**	**Yes**	**Yes**	**Full**	**1E**	**Yes**	**Plant Specific**		
	B	N-31, N-32 (SR) N-35, N-36 (IR) N-41A, B; N-42A, B; N-43A, B; N-44A, B (PR)	3 3 3 3	1E-1 to 1E6 cps (SR) 1E-11 to 1E-3 amps (IR) 0 to 100% power (PR)	No No No No	Yes Yes Yes Yes	SR** SR** SR** SR**	1A/1C 1A/1B 1A/1B 1C/1D	NI-31, 32 NI-35, 36 NI-41, 42 NI-43, 44 (B suffix for MCB ind.)	Yes* Yes* Yes* Yes*	Yes Yes Yes Yes	Neutron flux indication is considered a backup type B indication at Ginna and is therefore considered Category 3. *A two-pen recorder is provided with switchable inputs from all channels. **Protection portions of channels only.
25	**B**	**Control Rod Position**	**3**	**Full In or Not Full In**	**No**	**No**	**Comm.**	**n.p.**	**No**	**No**		
	B	Microprocessor rod position indication system (MRPI)	3	Rod position indicated in 12 step increments, as well as indication of rods full in or not full in	No	No	SS	*	Yes	No	Yes	*The MRPI system is powered from a dedicated transformer from safety-related 480-V MCCK/01MM.
26	**B**	**RCS Boron Concentration**	**3**	**0-6000 ppm**	**No**	**No**	**Comm.**	**n.p.**	**No**	**No**		
	B	AI-6053 [postaccident sampling system (PASS) boron analyzer]	3	50 ± 50 - 6000 ± 300 ppm	No	No	SS	*	No	No	No	*The PASS instrument panel is powered from 480-V bus 13 (non SR) via panel SB14. NRC SER dated 4/14/86, deferred the range and accuracy capabilities of postaccident sampling systems to NUREG-0737, item II.B.3. The Ginna PASS meets these criteria.
27	**B**	**RCS Hot Leg Water Temperature**	**1**	**50-700°F**	**Yes**	**Yes**	**Full**	**1E**	**Yes**	**Plant Specific**		
	B	TE-409A-1 (Loop A) TE-410A-1 (Loop B)	1 1	0-700°F 0-700°F	Yes Yes	Yes Yes	SR SR	1A 1C	TI-409A-1 TI-410A-1	No No	T0409A T0410A	

28	**B**	**RCS Cold Leg Water Temperature**	**1**	**50-700°F**	**Yes**	**Yes**	**Full**	**1E**	**Yes**	**Plant Specific**		
	A	*	*	*	*	*	*	*	*	*	*	*See item #11, RG&E type A variable
29	**B**	**RCS Pressure**	**1**	**0-3000 psig**	**Yes**	**Yes**	**Full**	**1E**	**Yes**	**Plant Specific**		
	A	*	*	*	*	*	*	*	*	*	*	*See item #13, RG&E type A variable.
30	**B**	**Core Exit Temperature**	**3**	**200-2300°F**	**No**	**No**	**Comm.**	**n.p.**	**No**	**No**		
	A	*	*	*	*	*	*	*	*	*	*	*See item #3, RG&E type A variable.
31	**B**	**Coolant Inventory**	**1**	**Hot Leg Bot.-Flange**	**Yes**	**Yes**	**Full**	**1E**	**Yes**	**Plant Specific**		
	A	*	*	*	*	*	*	*	*	*	*	*See item #15, RG&E type A variable.
32	**B**	**RCS Degrees of Subcooling**	**2**	**200°Fsub -35°Fsuper**	**Yes**	**No**	**Partial**	**Rel.**	**No**	**No**		
	A	*	*	*	*	*	*	*	*	*	*	*See item #22, RG&E type A variable.
33	**B**	**Containment Sump Level Narrow Range**	**2**	**Plant Specific**	**Yes**	**No**	**Partial**	**Rel.**	**No**	**No**		
	C	LT-2039 (Sump A) LT-2044 (Sump A)	3 3	0-30 ft 0-30 ft	No No	No No	SS SS	1A 1A	LI-2039 LI-2044	No No	L2039 L2044	NRC SER dated 12/4/90, found the instrumentation provided to be acceptable. Also satisfies item #42
34	**B**	**Containment Sump Level Wide Range**	**1**	**Plant Specific**	**Yes**	**Yes**	**Full**	**1E**	**Yes**	**Plant Specific**		
	A	*	*	*	*	*	*	*	*	*	*	*See item #23, RG&E type A variable.
35	**B**	**Containment Pressure**	**1**	**-5 psig to Design**	**Yes**	**Yes**	**Full**	**1E**	**Yes**	**Plant Specific**		
	A	*	*	*	*	*	*	*	*	*	*	*See item #6, RG&E type A variable. Note: The Ginna containment pressure indication covers a range of 10 psia to 300% design pressure.

36	**B**	**Containment Isolation Valve Position**	**1**	**Closed/Not Closed**	**Yes**	**Yes**	**Full**	**1E**	**Yes**	**Plant Specific**		**One per redundant function reqd. Check valve position ind. is not reqd.**
	B	See UFSAR Table 6.2-15 for list of containment isolation valves.	3	Open/closed	No	Yes	SS	ADC, BDC	Yes	No	Yes	Isolation valves outside containment go closed prior to being exposed to a harsh environment and therefore environmental qualification is not required. RG&E has taken exception to the need to qualify indication for valves inside containment. Ref. letter RG&E-NRC 5/6/91.
37	**C**	**Core Exit Temperature**	**1**	**200-2300°F**	**Yes**	**Yes**	**Full**	**1E**	**Yes**	**Plant Specific**		
	A	*	*	*	*	*	*	*	*	*	*	*See item #3, RG&E type A variable.
38	**C**	**RCS Radiation Level**	**1**	**0.5 - 100X Tech Spec**	**Yes**	**Yes**	**Full**	**1E**	**Yes**	**Plant Specific**		
	n.a.	Postaccident sampling system (PASS), manual radiation isotopic spectroscopy after sample taken	3	0.01 mR-1.0E04 R/hr	n.a.	n.a.	SS	n.a.	No	No	No	NRC SER dated 4/14/86, found the instrumentation provided to be acceptable. See note at end of table.
39	**C**	**Gamma Analysis of Primary Coolant**	**3**	**1.0E-5-10 Ci/ml**	**No**	**No**	**Comm.**	**N.P.**	**No**	**No**		
	C	Postaccident sampling system (PASS), manual radiation isotopic spectroscopy after sample taken	3	1.0E-5-10 Ci/ml. Range can be extended by dilution techniques.	n.a.	n.a.	SS	n.a.	No	No	No	NRC SER dated 4/14/86, found the instrumentation provided to be acceptable.
40	**C**	**RCS Pressure**	**1**	**0-3000 psig**	**Yes**	**Yes**	**Full**	**1E**	**Yes**	**Plant Specific**		
	A	*	*	*	*	*	*	*	*	*	*	*See item #13, RG&E type A variable.
41	**C**	**Containment Pressure**	**1**	**-5 psig to design**	**Yes**	**Yes**	**Full**	**1E**	**Yes**	**Plant Specific**		
	A	*	*	*	*	*	*	*	*	*	*	*See item #6, RG&E type A variable. Note: The Ginna containment pressure indication covers a range of 10 psia to 300% design pressure.
42	**C**	**Containment Sump Level Narrow Range**	**2**	**Top to Bottom**	**Yes**	**No**	**Partial**	**Rel.**	**No**	**No**		
	C	*	*	*	*	*	*	*	*	*	*	*See item #33, RG&E type C variable. NRC SER dated 12/4/90, found the instrumentation provided to be acceptable.

43	**C**	**Containment Sump Level Wide Range**	**1**	**Plant Specific**	**Yes**	**Yes**	**Full**	**1E**	**Yes**	**Plant Specific**		
	A	*	*	*	*	*	*	*	*	*	*	*See item #23, RG&E type A variable.
44	**C**	**Containment Area Radiation**	**3**	**1 to 1.0E4 R/hr**	**No**	**No**	**Comm.**	**n.p.**	**No**	**No**		
	E	R-2	3	0.01-1.0E5 R/hr	No	Yes	SS	1B	Yes	Yes	R02	NRC SER dated 4/14/86 found the instrumentation provided to be acceptable.
45	**C**	**Condenser Air Exhaust Noble Gas Radioactivity**	**2**	**1E-6 to 1E5 μCi/cm^3**	**Yes**	**No**	**Part.**	**Rel.**	**No**	**No**		
	E	R-15	2	1E-6 to 1E-3 μCi/cm^3	Mild	No	SS	1D	Yes	Yes	R15	
	C	**R-47**	**3**	**3.5 E-7 to 5.3 E-2 μCi/cm^3**	**Mild**	**No**	**SS**	**TSC**	**No**	**No**	**R47**	
	E	**R-48**	**2**	**1.3 E-2 to 1.0 E-5μCi/cm^3**	**Mild**	**No**	**SS**	**TSC**	**No**	**No**	**R48**	
46		**Deleted**										
47	**C**	**Containment Effluent Noble Gas at Release**	**2**	**1E-6 to 1E-2 μCi/cm^3**	**Yes**	**No**	**Partial**	**Rel.**	**No**	**No**		
	C	R-12 (cont. purge vent) R-14 (plant exhaust vent) R-31 (SG steam line A) R-32 (SG steam line B)	2 2 2 2	1E-6 to 1E-2 μCi/cm^3 1E-6 to 1E-1 μCi/cm^3 1E-1 to 1E3 μCi/cm^3 1E-1 to 1E3 μCi/cm^3	Mild Mild Mild Mild	No No No No	SR SS SS SS	1A 1A * *	Yes Yes Yes Yes	Yes Yes No No	Yes Yes Yes Yes	*SPING monitors are powered via a dedicated transformer from MCC D (safety related). SPING monitors R-12A (cont. purge vent) and R-14A (plant exhaust vent) are also available to monitor noble gas releases as well as particulates and iodine.
48	**C**	**Containment Effluent Noble Gas at Pen. etc.**	**2**	**1E-6 to 1E-2 μCi/cm^3**	**Yes**	**No**	**SS**	**Rel.**	**No**	**No**		
	C	*	*	*	*	*	*	*	*	*	*	*See item #47. These monitors are considered to provide adequate monitoring of all credible releases.
49	**D**	**RHR System Flow**	**2**	**0-110% Design**	**Yes**	**No**	**Partial**	**Ref.**	**No**	**No**		
	A	*	*	*	*	*	*	*	*	*	*	*See item #14, RG&E type A variable.

50	**D**	**RHR Heat Exchanger Outlet Temperature**	**2**	**40-350°F**	**Yes**	**No**	**Partial**	**Rel.**	**No**	**No**		
	n.a.	TE-627	3	50-400°F	No	No	SS	*	No	No	T0627	NRC SER dated 12/4/90 found the range provided acceptable. *Power to temperature loop from AC Dist. Panel CD03C/02
51	**D**	**Accumulator Tank Level**	**2**	**10-90%**	**Yes**	**No**	**Partial**	**n.p.**	**No**	**No**		
	n.a.	LT-934 (loop A) LT-935 (loop A) LT-938 (loop B) LT-939 (loop B)	3 3 3 3	±7 in. from nominal ±7 in. from nominal ±7 in. from nominal ±7 in. from nominal	No No No No	No No No No	SS SS SS SS	1C 1B 1C 1B	LI-934 LI-935 LI-938 LI-939	No No No No	No No No No	NRC SER dated 12/4/90 found the instrumentation provided acceptable. The Category 3 designation is consistent with RG&E's category determination philosophy.
52	**D**	**Accumulator Tank Pressure**	**2**	**0-750 psig**	**Yes**	**No**	**Partial**	**n.p**	**No**	**No**		
	n.a.	PT-936 (loop A) PT-937 (loop A) PT-940 (loop B) PT-941 (loop B)	3 3 3 3	0-800 psig 0-800 psig 0-800 psig 0-800 psig	No No No No	No No No No	SS SS SS SS	1C 1B 1C 1B	PI-936 PI-937 PI-940 PI-941	No No No No	No No No No	NRC SER dated 12/4/90 deferred resolution of these deviations to generic staff review of this issue. The Category 3 designation is consistent with RG&E's category determination philosophy.
53	**D**	**Accumulator Isolation Valve Position**	**2**	**Open/Closed**	**Yes**	**No**	**Partial**	**n.p.**	**No**	**No**		
	n.a.	MOV-841 (loop A) MOV-865 (loop B)	3 3	Open/closed Open/closed	No No	Yes Yes	SS SS	ADC BDC	Yes Yes	No No	No No	Valves are locked open and deenergized. NRC SER dated 12/4/90 found the instrumentation provided acceptable.
54	**D**	**Boric Acid Charging Flow**	**2**	**0-110% Design**	**Yes**	**No**	**Partial**	**Rel.**	**No**	**No**		
	n.a.	FT-128	2	0-75 gpm	Mild	No	SS	1D	FI-128B	No	F0128	NRC SER dated 4/14/86 found the instrumentation provided acceptable.
55	**D**	**High Pressure Injection (SI) Flow**	**2**	**0-110% design**	**Yes**	**No**	**Partial**	**Rel.**	**No**	**No**		
	D	FT-924 (SIP B) FT-925 (SIP A)	2 2	0-600 gpm 0600 gpm	Yes Yes	Yes Yes	SR SR	1A 1C	FI-924 FI-925	No No	F0924A F0925A	
56	**D**	**Low Pressure Injection (RHR) Flow**	**2**	**0-110% Design**	**Yes**	**No**	**Partial**	**Rel.**	**No**	**No**		
	A	*	*	*	*	*	*	*	*	*	*	*See item #14, RG&E type A variable.
57	**D**	**RWST Level**	**2**	**Top to Bottom**	**Yes**	**No**	**Partial**	**Rel.**	**No**	**No**		
	A	*	*	*	*	*	*	*	*	*	*	*See item #16, RG&E type A variable.

58	**D**	**RCP Status**	**3**	**Motor Current**	**No**	**No**	**Comm.**	**n.p.**	**No**	**No**		
	D	4.16-kV bus ammeters and RCP breaker status lights	3	0-1200A	No	No	SS	n.a.	Yes	No	Yes	
59	**D**	**Pressurizer PORVs and Safeties Position**	**2**	**Closed/Not Closed**	**Yes**	**No**	**Partial**	**Rel.**	**No**	**No**		
	D	ZS-430 (PORV) ZS-431C (PORV) TE-438 (discharge temperature) ZT-434 (safety valve) ZT-435 (safety valve) TE-436, TE-437 (dis temp)	2 2 3* 2 2 3*	Open/close Open/close 0-300°F Open-close (in.) Open-close (in.) 0-400°F	Yes Yes No Yes Yes No	Yes Yes Yes Yes Yes Yes	SR SR SS SS SS SS	BDC BDC 1A 1A 1A 1A	Yes Yes TI-438 Yes Yes Yes, Yes	No No No No No No	V0430 V0431 No No No No	*The RTDs downstream of these valves, TE-438 (PORVs) and TE-436 and TE-437 (safeties), are available in the control room and are considered backup indication of valve position.
60	**D**	**Pressurizer Level**	**1**	**Top to Bottom**	**Yes**	**Yes**	**Full**	**1E**	**Yes**	**Plant Specific**		
	A	*	*	*	*	*	*	*	*	*	*	*See item #9, RG&E type A variable. Note: level indication does not cover the hemispherical top and bottom portions of the pressurizer.
61	**D**	**Pressurizer Heaters Status**	**2**	**Electric Current**	**Yes**	**No**	**Partial**	**Rel.**	**No**	**No**		
	D	Control bank breaker status lights Backup bank breaker status lights 480-V bus voltage and kW demand	2 2 2	Closed/auto/on Closed/auto/on 0-1500 kW	Mild Mild Mild	No No No	SS SS SS	ADC BDC n.a.	Yes Yes Yes	No No No	No No Yes	NRC SER dated 12/4/90 found the instrumentation provided acceptable.
62	**D**	**Pressurizer Relief (Quench) Tank Level**	**3**	**Top to Bottom**	**No**	**No**	**Comm.**	**n.p.**	**No**	**No**		
	D	LT-442	3	0-100%	No	No	SS	1B	LI-442	No	L0442	
63	**D**	**Pressurizer Relief (Quench) Tank Tamp.**	**3**	**50°F-750°F**	**No**	**No**	**Comm.**	**n.p.**	**No**	**No**		
	D	TE-439	3	(50-400°F)	No	No	SS	1A	TI-439	No	T0439	NRC SER dated 12/4/90 found the instrument range acceptable.
64	**D**	**Pressurizer Relief (Quench) Tank Pressure**	**3**	**0 psig to design**	**No**	**No**	**Comm.**	**n.p.**	**No**	**No**		
	D	PT-440	3	0-150 psig	No	No	SS	1B	PI-440A PI-440B	No	P0440	Rupture disk setpoint is 100 psig.
65	**D**	**Steam Generator Wide Range Level**	**1**	**Tubesheet - Separators**	**Yes**	**Yes**	**Full**	**1E**	**Yes**	**Plant Specific**		**Two per generator required for two loop plants**
	A	*	*	*	*	*	*	*	*	*	*	*See item #18, RG&E type A variable.
66	**D**	**Steam Generator Pressure**	**2**	**Atm. - 20% > Safety**	**Yes**	**No**	**Partial**	**Rel.**	**No**	**No**		
	A	*	*	*	*	*	*	*	*	*	*	*See item #20, RG&E type A variable.

67	D	**Main Steam Flow (or SG Safety Valve Pos.)**	2	**0-110% Design**	**Yes**	**No**	**Partial**	**Rel.**	**No**	**No**		
	D	FT-464 (SG A) FT-465 (SG A) FT-474 (SG B) FT-475 (SG B) FT-498 (SG A) FT-499 (SG B)	2 2 2 2 3 3	0-4.6E6 pph 0-4.6E6 pph 0-4.6E6 pph 0-4.6E6 pph 0-4.6E6 pph 0-4.6E6 pph	Yes Yes Yes Yes No No	Yes Yes Yes Yes Yes Yes	SR SR SR SR SS SS	1A 1B 1C 1D 1C/TSC* 1C/TSC*	FI-464 FI-465 FI-474 FI-475 FI-498 FI-499	Yes** Yes** Yes** Yes** Yes** Yes**	F0464 F0465 F0474 F0475 F0498 F0499	*Denotes auctioneered power supply from the advanced digital *feedwater control system* (ADFCS). Power for the system is auctioneered from bus 1C and the TSC Inverter. **Median of three channels per SG is recorded.
68	D	**Main Feedwater Flow**	3	**0-110% Design**	**No**	**No**	**Comm.**	**N.P.**	**No**	**No**		
	D	FT-466 (SG A) FT-467 (SG A) FT-476 (SG B) FT-477 (SG B) FT-500 (SG A) FT-503 (SG B)	3 3 3 3 3 3	0-4.6E6 pph 0-4.6E6 pph 0-4.6E6 pph 0-4.6E6 pph 0-4.6E6 pph 0-4.6E6 pph	No No No No No No	No No No No No No	SS SS SS SS SS SS	1C/TSC** 1C/TSC** 1C/TSC** 1C/TSC** 1C/TSC** 1C/TSC**	FI-466 FI-467 FI-476 FI-477 FI-500 FI-503	Yes* Yes* Yes* Yes* Yes* Yes*	F0466 F0467 F0476 F0477 F0500 F0503	*Recorders FR-465 (SG A) and FR-475 (SG B) record median flow of the three channels. **Main feedwater flow transmitters receive power from the digital feedwater control system (ADFCS). Power for the system is auctioneered from bus 1C and the TSC Inverter.
69	D	**Auxiliary Feedwater Flow**	2	**0-110% Design**	**Yes**	**No**	**Partial**	**Rel.**	**No**	**No**		
	A D D	* FT-4084 (Standby**) FT-4085 (Standby**)	* 2 2	* 0-300 gpm (0-128%) 0-300 gpm (0-128%)	* Mild Mild	* Yes Yes	* SR SR	* 1A 1C	* FI-4084B FI-4085B	* No No	* F4084 F4085	*See item #1, RG&E type A variable. **Ginna Station has a manual standby auxiliary feedwater system, (SAFW) which duplicates the capacity of the motor-driven Preferred auxiliary feedwater system (AFW).
70	D	**Condensate Storage Tank (CST) Level**	1	**Plant Specific**	**Yes**	**Yes**	**Full**	**1E**	**Yes**	**Plant Specific**		
	A	*	*	*	*	*	*	*	*	*	*	*See item #7, RG&E type A variable.
71	D	**Containment Spray Flow**	2	**0-110% Design**	**Yes**	**No**	**Partial**	**Rel.**	**No**	**No**		
	n.a.	None	*	*	*	*	*	*	*	*	*	*Indirect indication of containment spray flow is available using SI flow and RHR flow. NRC SER dated 12/4/90 found this acceptable.

72	D	**Containment Fan Heat Removal**	2	**Plant Specific**	**Yes**	**No**	**Partial**	**Rel.**	**No**	**No**		
	n.a.	None	*	*	*	*	*	*	*	*	*	*Indirect indication of containment fan heat removal is available using containment air temperature, sump temperature, and containment pressure. NRC *SER dated 12/4/90 found this* acceptable.
73	D	**Containment Air Temperature**	2	**40-400°F**	**Yes**	**No**	**Partial**	**Rel.**	**No**	**No**		
	D	TE-6031 (elev. 245 ft 0 in.)	2	0-300°F	Yes	(Yes)	SS	*	No	No	Yes	NRC SER dated 12/4/90 found the range deviation to be acceptable. *1E supply from MCC 1D (B train)
		TE-6035 (elev. 261 ft 9 in.)	2	0-300°F	Yes	(Yes)	SS	*	No	No	Yes	
		TE-6036 (elev. 261 ft 9 in.)	2	0-300°F	Yes	(Yes)	SS	*	No	No	Yes	
		TE-6037 (elev. 261 ft 9 in.)	2	0-300°F	Yes	(Yes)	SS	*	No	No	Yes	
		TE-6038 (elev. 261 ft 9 in.)	2	0-300°F	Yes	(Yes)	SS	*	No	No	Yes	
		TE-6045 (elev. 286 ft 4 in.)	2	0-300°F	Yes	(Yes)	SS	*	No	No	Yes	
74	D	**Containment Sump Temperature**	2	**50-250°F**	**Yes**	**No**	**Partial**	**Rel.**	**No**	**No**		
	n.a.	TE-490 A/B (sump A)	2	0-360°F	Yes	Yes	SR	1A/1C	No	No	Yes	TE-490A/B and TE-491A/B are dual element RTDs. The 'A' elements are powered from bus 1A and the 'B' elements are powered from bus 1C. Each element is available on the PPCS as a separate point.
		TE-491 A/B (≈4.3 ft above basement floor)	2	0-360°F	Yes	Yes	SR	1A/1C	No	No	Yes	
75	D	**Reactor Water Makeup Flow (CVCS)**	2	**0-110% Design**	**Yes**	**No**	**Partial**	**Rel.**	**No**	**No**		
	n.a.	FT-111	2	5-75 gpm (0-100%)	Mild	No	SS	1A	No	FR-110	No	NRC SER dated 12/4/90 found the instrument range acceptable.
76	D	**Letdown Flow (CVCS)**	2	**0-110% Design**	**Yes**	**No**	**Partial**	**Rel.**	**No**	**No**		
	n.a.	FT-134	2	0-100 gpm (0-167%)	Mild	No	SS	1D	FI-134	No	F0134	
77	D	**Volume Control Tank Level**	2	**Top to Bottom**	**Yes**	**No**	**Partial**	**Rel.**	**No**	**No**		
	n.a.	LT-112	2	0-100%	Mild	No	SS	1B	LI-112	No	L0112	
78	D	**CCW Temperature to ESF System**	2	**40-200°F**	**Yes**	**No**	**Partial**	**Rel.**	**No**	**No**		
	n.a.	TE-621 (component cooling water (CCW) heat exchanger temperature)	2	0-225°F	Mild	No	SS	1B	TI-621	No	T0621	NRC SER dated 12/4/90 found the instrumentation provided to be acceptable.

79	**D**	**CCW Flow to ESF System**	**2**	**0-110% Design**	**Yes**	**No**	**Partial**	**Rel.**	**No**	**No**		
	n.a.	FT-619 (component cooling water (CCW) system flow)	2	0-7000 gpm	Mild	No	SS	1C	No	No	F0619	The CCW system is prealigned with flows to various ESF components manually adjusted using local flow indicating switches. RG 1.97 states that the purpose of this variable is to monitor operation. The instrumentation provided meets this intent.
80	**D**	**Hi Level Radioactive Liquid Tank Level**	**3**	**Top to Bottom**	**No**	**No**	**Comm.**	**n.p.**	**No**	**No**		
	D	LT-1001 (waste holdup tank) LT-1003 (reactor coolant drain tank)	3 3	≈0-100% ≈0-100%	No No	No No	SS SS	** *	No No	No No	No L1003	Indication of both tank levels are available at the radwaste panel *Normally fed from 480-V safeguards bus 14 (train A) with a manual backup to 480-V safeguards bus 16 (train B) ** Pneumatic
81	**D**	**Radioactive Gas Holdup Tank pressure**	**3**	**0-150% Design**	**No**	**No**	**Comm.**	**n.p.**	**No**	**No**		
	n.a.	PT-1036 (Tank 1) PT-1037 (Tank 2) PT-1038 (Tank 3) PT-1039 (Tank 4)	3 3 3 3	0-150 psig (0-100%) 0-150 psig (0-100%) 0-150 psig (0-100%) 0-150 psig (0-100%)	No No No No	No No No No	SS SS SS SS	** ** ** **	No No No No	No No No No	No No No No	Design of each tank and its safety valve setpoint is 150 psig. Normal radgas pump operating pressure is <100 psig. NRC SER dated 12/4/90 found this range deviation acceptable. ** Pneumatic
82	**D**	**Emergency Ventilation Damper Position**	**2**	**Open/Closed**	**Yes**	**No**	**Partial**	**Rel.**	**No**	**No**		
	D	7970 (mini-purge) 7971 (mini-purge) 7445 (mini-purge) 7478 (mini-purge)	3 3 3 3	Open/closed Open/closed Open/closed Open/closed	No No No No	Yes Yes Yes Yes	SS SS SS SS	ADC ADC ADC ADC	Yes Yes Yes Yes	No No No No	No No No No	Mini-purge valves are locked closed and only opened for containment pressure control. These valves are in their safety-related position prior to any adverse conditions and do not change position throughout any accident. Therefore EQ is not deemed necessary.
83	**D**	**Standby Power/Energy Imp. to Safety Status**	**2**	**Plant Specific**	**Yes**	**No**	**Partial**	**Rel.**	**No**	**No**		
	D	EDG A, B: V, 1W, A 125-V dc A, B, V, A PT-2023 (instrument air) PT-455 (PORV, SI acc) PT-456 (PORV, SI acc)	3 3 3 2 2	0-500 V, 0-3000 A, 0-2 MW 0-150 V, 0-50 A 0-160 psig 0-1000 psig 0-1000 psig	Mild Mild Mild Mild Mild	No No No No No	SS SS NS SS SS	n.a n.a 1C 1B 1A	Yes Yes PI-2086 PI-455 PI-456	No No No No No	Yes Yes No No No	

84	**E**	**Containment High Radiation Monitor**	**1**	**1-1E7 R/hr**	**Yes**	**Yes**	**Full**	**1E**	**Yes**	**Plant Specific**		
	E	R-29 R-30	1 1	1 R/hr-1E7 R/hr 1 R/hr-1E7 R/hr	Yes Yes	Yes Yes	SR SR	1A 1C	RM-29 RM-30	Yes Yes	R-29 R-30	
85	**E**	**Radiation Exposure Rate-Access Required Areas**	**3**	**1E-1-1E4 R/hr**	**No**	**No**	**Comm.**	**n.p.**	**No**	**No**		
	D	Various microprocessor based monitors located and qualified to satisfy NUREG 0654	3	0.1-1E7 mR/hr	No	No	SS	Various	Yes	Yes	Yes	
86	**D**	**Airborne Radiation Release Noble Gas and Flow**	**2**	**1E-6-1E5 μCi/cm^3**	**Yes**	**No**	**Partial**	**Rel.**	**No**	**No**		
	C	*	*	*	*	*	*	*	*	*	*	*See item #47, RG&E type C variable
87	**E**	**Airborne Radiation Release Particulate and Halogens**	**3**	**1E3-1E2 μCi/cm^3**	**No**	**No**	**Comm.**	**n.p.**	**No**	**No**		
	E	RM-12A (containment vent) RM-14A (plant exhaust vent)	3 3	1E-5-10 μCi/cm^3 halogens, 1E-6-1 μCi/cm^3 particulate 5E-5-50 μCi/cm^3 halogens, 2.5E-5-25 μCi/cm^3 part.	No No	No No	SS SS	* *	Yes Yes	Yes Yes	R-12A R-14A	*SPING radiation monitors are powered from a dedicated supply from MCC D (safety related).
88	**E**	**Airborne Radioactivity and Part. (Portable Samplers)**	**3**	**1E-9-1E-3 μCi/cm^3**	**No**	**No**	**Comm.**	**n.p.**	**No**	**No**		
	E	Various fixed and portable samplers	3	1E-12-1E-3 μCi/cm^3 (Aliquot or diluted sample)	No	No	SS	n.a.	No	No	No	
89	**E**	**Plant and Environ. Radiation (Portable)**	**3**	**1E-3-1E4 R(rad)/hr**	**No**	**No**	**Comm.**	**n.p.**	**No**	**No**		**Beta Radiations and Photons**
	E	Various portable instrumentation	3	1E-6-1E3 R/hr gamma 1E-3-1E3 R/hr beta	No	No	SS	n.a.	No	No	No	
90	**E**	**Plant and Environ. Radioactivity (Portable)**	**3**	**Isotopic Analysis**	**No**	**No**	**Comm.**	**n.p.**	**No**	**No**		
	E	Multichannel gamma ray spectrometer	3	1E-8-10 μCi	No	No	SS	n.a.	No	No	No	
91	**E**	**Wind Direction**	**3**	**0-360°**	**No**	**No**	**Comm.**	**n.p.**	**No**	**No**		
	E	Wind direction at 33 ft Wind direction at 150 ft Wind direction at 250 ft (elevations at met tower)	3 3 3	0-360° 0-360° 0-360°	No No No	No No No	SS SS SS	* * *	No No No	RK-32 No No	WD033 WD150 WD250	*The weather tower currently receives power directly via an offsite supply.

92	**E**	**Wind Speed**	**3**	**0-50 mph**	**No**	**No**	**Comm.**	**n.p.**	**No**	**No**		
	E	Wind speed at 33 ft Wind speed at 150 ft Wind speed at 250 ft (elevations at met tower)	3 3 3	0-50 mph 0-100 mph 0-100 mph	No No No	No No No	SS SS SS	* * *	No No No	RK-32 No No	WS033 WS150 WS250	*The weather tower currently receives power directly via an offsite supply.
93	**E**	**Estimation of Atmospheric Stab.**	**3**	**Based on Vert. ΔT**	**No**	**No**	**Comm.**	**n.p.**	**No**	**No**		
	E	RTDs at 33, 150, 250 ft elevations (met tower)	3	-8-20°F between each elevation	No	No	SS	*	Yes**	No	WDT1 WDT2	*The weather tower currently receives power directly via an offsite supply. **Temperatures at each elevation are displayed in the control room.
94		**Deleted**										
95		**Deleted**										

a. Recorder

Chart

Yes — A control room recorder is provided. The equipment identification number is provided if appropriate.

No — No recorder is provided.

Comp

Yes — The variable is available on the plant process computer. (The point identification is given if appropriate).

No — The instrument does not input to the computer.

b. Classification

Postaccident instrumentation at Ginna Station is classified according to the following criteria:

Type A: Indication required by the operator during performance of an emergency operating procedure (EOP), in response to a design basis accident, to determine if manual actions are required in order to accomplish required safety functions for which no automatic action is provided.

Type B: Indication used by the operator during performance of an emergency operating procedure (EOP), in response to a design basis accident, to verify that required automatic or manual safety functions have been accomplished.

Type C: Indication used by the operator during performance of an emergency operating procedure (EOP), in response to a design basis accident, to determine if any of the barriers to fission product release have been or may be breached.

Type D: Indication used by the operator during performance of an emergency operating procedure (EOP), in response to a design basis accident, to determine that a safety system or system important to safety has actuated.

Type E: Indication used by the operator to determine the magnitude of a radioactive release and to continually assess the release.

n.a. is entered for variables that although listed in Regulatory Guide 1.97, Revision 3, are not considered postaccident variables at Ginna Station.

ization

Type A variables and key (primary) types B and C variables make up Category 1.

Key (primary) types D and E variables make up Category 2.

Backup types B, C, D, and E variables make up Category 3.

annel is not considered postaccident instrumentation at Ginna Station (n.a. under TYPE) then this entry represents the current level of qualification of the channel.

ent Qualification

Those portions of Category 1 or 2 postaccident instrumentation channels located in harsh environments are qualified for their design basis accident environments in accordance witl 10 CFR 50.49 Environmental Qualification Program. Design basis accident environments are specified in Table 3.11-1. Those portions of postaccident instrumentation channels l environments do not require environmental qualification.

Yes	Signifies environmental qualification in accordance with the Ginna Station 10 CFR 50.49 compliance program (Section 3.11) is provided.
No	Signifies environmental qualification is not provided.
Mild	Signifies the primary device is located in a mild environment during its postaccident function and therefore environmental qualification is not provided.
(Yes)	Signifies environmental qualification in accordance with the Ginna Station 10 CFR 50.49 compliance program is planned but not yet complete.

Category 1 postaccident instrumentation is seismically qualified in accordance with the Ginna Seismic Qualification Program (Section 3.10) with the following clarifications:

1.	Seismic qualification for analog indicators was generally not provided for those indicators in place before 1983 regardless of category. Only those portions of the channel that function (i.e., RPS or ESF actuation) were qualified.
2.	Seismic qualification is not considered necessary for recorders unless they provide the sole indication for a Category 1 variable.
3.	Seismic qualification for inputs to the plant process computer is provided only up to the isolating device feeding the computer input. The SAS/PPCS is not seismically qua
4.	Only the mounting of status light housings is considered seismically qualified. Light bulbs are considered "commercially rugged" and can be reasonably expected to surviv
Yes	Signifies seismic qualification in accordance with the Ginna Seismic Qualification Program is provided. Seismic qualification at Ginna is currently being resolved under U
No	Signifies seismic qualification is not provided.
(Yes)	Signifies seismic qualification is proposed but not yet provided.

Seismic qualification only applies to the primary variable indication and those portions of the instrument loop necessary for this indication to function. Recorders are not se unless they are the primary indicator. The plant process computer is not seismically qualified.

Assurance

ory Guide 1.97 Quality Assurance Category

lity assurance in accordance with Regulatory Guides 1.28, 1.30, 1.38, 1.58, 1.64, 1.74, 1.88, 1.123, 1.144, and 1.146 is recommended.

lity assurance commensurate with the importance to safety of the instrument should be provided.

lity assurance through high quality commercial practices should be provided.

naintains an approved 10 CFR 50 Appendix B Quality Assurance Program which is based on the ANSI/ANS 51.1 Standard. Three quality categories exist:

ety-related class (SR)

ety-significant class (SS)

n-safety class (NS)

ety-related class (SR) provides for full program control and is considered suitable for any category of postaccident instrumentation. The safety-significant class (SS) provides augmented quality nportance to safety of the device or activity and is considered suitable for Categories 2 or 3 variables, and certain portions of Category 1 channels (recorders, secondary indicators). The non-safe normal commercial-grade quality control which may be suitable for some Category 3 variables.

nent of postaccident instrumentation equipment currently installed was in accordance with the Quality Assurance Program in effect at the time of the procurement for the classification of the e . Future procurement, maintenance, calibration, and design controls will be in accordance with the program as described above.

upply

ory Guide 1.97

ver provided in accordance with Regulatory Guide 1.32 with battery backup if momentary loss cannot be tolerated should be provided.

igh reliability power source with battery backup if momentary loss cannot be tolerated should be provided.

provision made in Regulatory Guide 1.97, Revision 3.

tation

afety-related power supply (1E) provided from instrument bus 1A. Safety-related battery A supply precludes momentary loss of power.

afety-related power supply (1E) provided from instrument bus 1B. No battery backup is provided. Emergency onsite power is provided by emergency diesel generator A.

afety-related power supply (1E) provided from instrument bus 1C. Safety-related battery B supply precludes momentary loss of power.

afety-related power supply from inverter MQ-483. Safety-related battery A supply precludes momentary loss of power.

on-safety-related power supply from instrument bus 1D. No battery backup is provided nor emergency onsite source.

ighly reliable onsite power source with battery backup to preclude momentary loss of power.

ety-related battery bus A.

ety-related battery bus B.

Room Indication

trol room indication separate from a recorder is provided.

trol room indicator (other than plant process computer or recorder) is not provided.

e: the equipment identification number is provided if appropriate.

Figure 7.5-1 Control Room Layout

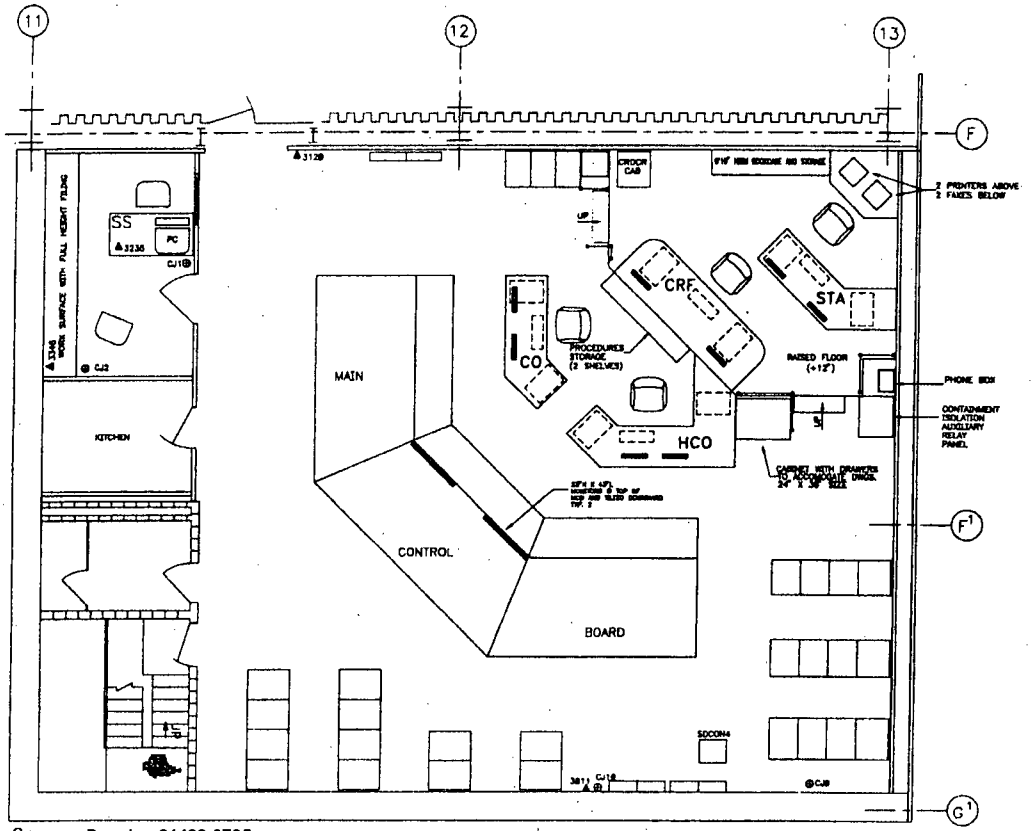

Source: Drawing 21489-0735

7.6 OTHER INSTRUMENTATION SYSTEMS REQUIRED FOR SAFETY

7.6.1 OVERPRESSURE PROTECTION DURING LOW POWER OPERATION

The actuation circuitry of the pressurizer power operated relief valves (PORVs) has been modified to provide a low-pressure lift setpoint within the limit specified in the Pressure and Temperature Limits Report (PTLR) during startup and shutdown conditions (see Section 5.2.2.2).

The Low Temperature Overpressure Protection (LTOP) circuitry for low pressure power operated relief valve (PORV) actuation circuitry uses multiple pressure sensors, power supplies and logic trains to improve system reliability. Each of the two pressurizer power operated relief valves (PORVs) is manually enabled using two keylock switches, one to line up the nitrogen supply and the other to enable the low-pressure setpoint.

When the reactor vessel is at low temperature with the Low Temperature Overpressure Protection (LTOP) system enabled, a pressure transient is terminated below the 10 CFR 50, Appendix G limit by automatic opening of the pressurizer power operated relief valves (PORVs). An enabling alarm monitors the reactor coolant system temperature, the position of the keylock switches, and the upstream isolation valve position.

The Low Temperature Overpressure Protection (LTOP) system is required to be in operation during plant cooldown prior to decreasing temperature below the limit specified in the PTLR or on initiation of the residual heat removal system, and it is disabled prior to exceeding 350°F during plant heatup. The enabling alarm alerts the operator in the event the reactor coolant system temperature is below the limit specified in the PTLR and the Low Temperature Overpressure Protection (LTOP) system valve or switch alignment has not been completed.

The pressurizer power operated relief valves (PORVs) are spring closed and air or nitrogen opened. Each of the two pressurizer power operated relief valves (PORVs) receives actuating gas from either the plant instrument air system or a backup nitrogen accumulator; however, only nitrogen is used during LTOP conditions. Low-pressure alarms are installed in the control room to alert the operator to a low nitrogen accumulator pressure condition.

In addition to narrow-range pressurizer pressure indication, a reactor coolant system wide-range pressure indication and recording (0-3000 psig) and a low-pressure indication (0-700 psig) are provided on the main control board.

An overpressure alarm that incorporates two setpoints is also provided. One setpoint is variable and follows the PTLR limit. The other alarms at a preprogrammed differential pressure. Both setpoints alarm and light on the plant process computer system.

7.6.2 AUXILIARY FEEDWATER SYSTEM AUTOMATIC INITIATION AND FLOW INDICATION

Redundant flow indication is provided for each motor-driven auxiliary feedwater pump (MDAFW) and the common discharge of the turbine-driven auxiliary feedwater pump (TDAFW). Each redundant channel of flow indication consists of the following:

- Qualified transmitter.
- Transmitter power supply.
- Square root extractor.
- Output isolation amplifier.
- Main control board analog indicator.

Continuous indication is provided to the operator by means of a dual movement vertical scale indicator. Each movement receives the analog signal from its respective channel of flow indication for a particular auxiliary feedwater flow path. Hence, the operator can quickly ascertain if there is any discrepancy between channels.

7.6.3 SUBCOOLING METER

As a result of NUREG 0578, Item 2.1.3.b, Instrumentation for Detection of Inadequate Core Cooling, two separate analog subcooling meters were installed to provide a continuous display of reactor coolant temperature margin to saturation. There is one resistance temperature detector input from each hot leg, one going to each meter. The range is 0°-700°F. The dual-element resistance temperature detectors are seismically and environmentally qualified. There is one pressurizer pressure input for each meter with a range of 0-3000 psig. Resistance temperature detectors and pressure transmitters are seismically and environmentally qualified.

Redundancy is provided by the plant process computer system and safety parameter display system whose inputs are independent of the subcooling meter. Computer temperature input comes from five in-core thermocouples with a range of 300-700°F and pressure input comes from the reactor coolant system with a range of 0-3000 psig.

Indication of the subcooling margin is provided in the control room. An alarm is provided to indicate that one of the channels has computed a subcooling margin of 35 °F or less. Subcooling margin is input to the plant process computer system for MODES 1 and 2 and safety assessment.

Emergency operating procedures (EOPs) utilize core exit thermocouples, reactor coolant system pressure and EOP subcooling attachments to determine subcooling values for EOP usage.

7.6.4 DIRECT CURRENT POWER SYSTEM BUS VOLTAGE MONITORING AND ANNUNCIATION

A dc monitoring system has been added to the three dc systems. The system provides a separate group alarm for each battery consisting of a high voltage alarm (greater than 140 V), a low voltage alarm (less than 132 V), low charging rate alarm, or negative (discharging) rate

alarm. The system along with existing alarms (Section 8.3.2.2) provides complete indication of abnormal dc system conditions.

7.6.5 REACTOR VESSEL LEVEL INDICATION SYSTEM

The reactor vessel level indication system is used to trend coolant inventory within the reactor vessel during all phases of plant operation, including postaccident conditions with quasi-steady-state conditions and during slowly developing transients. The reactor vessel level indication system is a Class 1E system and all components are designated Seismic Category I. The reactor vessel level indication system consists of two redundant differential pressure transmitters. One process connection of the transmitters is connected to tubing from the reactor vessel head and the other is connected to tubing associated with an in-core neutron flux mapping guide tube. The output from these transmitters is processed by redundant Foxboro signal processing racks. The Foxboro signal processing rack produces an analog signal that is proportional to the reactor coolant inventory in the reactor vessel.

Other parameters introduced to the Foxboro signal processing racks are core exit temperatures, cold leg temperature, reactor coolant system wide-range pressure, reactor coolant pump status, safety injection status, and residual heat removal status. The introduction of these inputs is necessary for an accurate reactor vessel inventory output. The differential pressure signals are processed to compensate for reference leg temperature differences, primary coolant flow and temperature, safety injection, and residual heat removal operation.

The reactor vessel level indication system displays reactor vessel level and vessel fluid fraction locally at each reactor vessel level indication system instrument rack and in the main control room. Signals are also input to the plant process computer system for an independent calculation of reactor vessel level.

An evaluation of the Westinghouse Owners Group Emergency Response Guidelines was performed to establish a minimum accuracy design objective for the reactor vessel level indication system. This evaluation is presented in *Reference 1*. For worst-case conditions an uncertainty of approximately 10% was determined to be an acceptable design objective. The worst-case uncertainty for the system is 10%, which meets the design objective.

Failure of the upper sensing line to drain under voiding conditions is addressed in *Reference 2*. If this line does not drain, the reactor vessel level indication system will read higher than the actual reactor vessel level, which is non-conservative. A correction factor will address this issue. This correction factor of 4% fluid fraction (with reactor coolant pumps on) or 9% reactor vessel level (with reactor coolant pumps off) has been added to the setpoints for the reactor vessel level indication system used in emergency operating procedures.

The instrumentation ranges from the top of the reactor vessel to the top of the core exit thermocouples. Because of flow instabilities with vessel inventory below the hot leg and the reactor coolant pumps on, the instrumentation will only provide accurate trending information from the top of the vessel to the hot leg. With the reactor coolant pumps off, the instrumentation is accurate from the top of the vessel to the top of the core exit thermocouples. Inventory trending below the top of the core is calculated based upon assumed saturated conditions within the core corresponding to system pressure. Instrument indication below the top

of the core should give reasonable results for collapsed inventory; however, it is considered only an approximation of the inventory trend because of the many phenomena that may affect system response. The reactor vessel level indication system was installed to meet the requirements of NUREG 0737, Item II.F.2. Its purpose is to provide the plant operator additional information on reactor vessel water level, particularly during transient events.

REFERENCES FOR SECTION 7.6

1. Letter from R. W. Kober, RG&E, to C. Stahle, NRC, Subject: Inadequate Core Cooling Instrumentation, NUREG 0737, Item II.F.2, dated September 18, 1987.

2. Rochester Gas and Electric Corporation Design Analysis, DA-EE-97-055, Reactor Vessel Level Indication System (RVLIS) Correction, dated June 23, 1997.

7.7 CONTROL SYSTEMS NOT REQUIRED FOR SAFETY

7.7.1 DESCRIPTION

7.7.1.1 General

7.7.1.1.1 Reactor Control System

The reactor control system is designed to limit nuclear plant transients for prescribed design load perturbations, under automatic control, within prescribed limits to preclude the possibility of a reactor trip in the course of these transients.

The following is a general description of the reactor control system employed by Westinghouse for control of pressurized water reactors (PWRs):

During steady-state operation, the primary function of the reactor control is to maintain a programmed average reactor coolant temperature that rises in proportion to load. The control system also limits nuclear plant system transients to prescribed limits about this programmed temperature for specified load perturbations. (See Figure 7.7-1.)

In 1997 and 1999, components in channels I, II, III, and IV were replaced such that the function being performed by the electrical bridge circuit in the temperature channels were modified to be accomplished mathematically in the time domain module (see Figure 7.2-14).

The controller compares the average of these temperatures with the programmed temperature. A signal, proportional to plant load, sets the programmed temperature.

The controller directs fixed groups of control rod clusters (the control groups) to increase or decrease reactor power as required to maintain the desired average temperature. Within each control group, a proportional speed control sequentially actuates the rods. The sequential mode of operation provides fine temperature control for steady-state operation, including those periods when boron concentration is adjusted to account for long-term reactivity effects such as core burnup.

For rapid reactivity requirements to accommodate relatively large changes in load, the control groups are driven at a higher rate through the proportional speed control so that each group is effectively moving as a unit. A neutron flux signal and a turbine load signal are used in addition to the average temperature signal to improve the controller response for large and rapid load variations.

7.7.1.1.2 Steam Dump Control System

A steam dump control system removes sensible heat stored in the reactor coolant system for a large step load decrease or a reactor trip. With the average reactor coolant temperature programmed, the full load average temperature is significantly greater than the saturation pressure corresponding to the Main Steam Safety Valve (MSSV) set pressure. Steam is dumped in order to remove the stored heat in the primary system at a rate fast enough to prevent lifting of the Main Steam Safety Valve (MSSV) for a large step load decrease, or a reactor trip. The

average reactor coolant temperature and steam pressure activate the dump system, which is interlocked with plant output to improve overall control reliability.

7.7.1.1.3 Reactivity Control

The shutdown groups of control rods are capable of shutting the reactor down by a sufficiently safe margin. They are used in conjunction with the adjustment of chemical shim and the control group to maintain proper shutdown margins for all operating conditions.

The automatic control group is interlocked with measurements of turbine output to prevent automatic control below a predetermined percentage of full power. The manual automatic controls are further interlocked with measurements of coolant temperatures, nuclear flux, and rod drop indication to prevent approach to an overpower condition.

Overall reactivity control is achieved by the combination of chemical shim and control rod clusters. Long-term regulation of core reactivity is accomplished by adjusting the concentration of boric acid in the reactor coolant. Short-term reactivity control for power changes or reactor trip is provided by movement of control rod clusters.

The primary function of the reactor control system is to provide automatic control of the rod clusters during power operation of the reactor. The system uses input signals including neutron flux, coolant temperature, and plant turbine load. The chemical and volume control system serves as a secondary reactor control system by the addition and removal of varying amounts of boric acid solution.

A block diagram of the reactor control system is shown in Figure 7.7-2.

There is no provision for a direct continuous visual display of primary coolant boron concentration. When the reactor is critical, the best indication of reactivity status in the core is the position of the control group in relation to plant power and average coolant temperature. There is a direct, predictable, and reproducible relationship between rod position and power and it is this relationship that establishes the lower insertion limit calculated by the rod insertion limit monitor. There are two alarm setpoints to alert the operator to take corrective action in the event a control group approaches or reaches its lower limit.

Any unexpected change in the position of the control group under automatic control or a change in coolant temperature under manual control provides a direct and immediate indication of a change in the reactivity status of the reactor. In addition, periodic samples of coolant boron concentration are taken. The variation in concentration during core life provides a further check on the reactivity status of the reactor including core depletion.

7.7.1.1.4 Reactor Control System Operation

The reactor control system is designed to enable the reactor to follow load changes automatically when the plant output is above 12.8% of nominal power. Control rod positioning may be performed automatically when plant output is above this value and manually at any time.

The operator is able to select any single bank of rods for manual operation. This is accomplished with a single switch so that the operator may not select more than one bank. The

operator may also select automatic or manual reactor control, in which case the control banks can be moved only in their normal sequence with some overlap as one bank reaches its full withdrawal position and the next bank begins to withdraw. Relay interlocks, designed to meet the single-failure criterion, are provided to preclude simultaneous withdrawal of more than one group of control and shutdown rods except in overlap regions.

The system enables the nuclear plant to accept a generation step load increase of 10% and a ramp increase of 5% per minute within the load range of 12.8% to 100% without reactor trip subject to possible xenon limitations. Similar step and ramp load reductions are possible within the range of 100% to 12.8% of nominal power.

The control system is capable of restoring coolant average temperature to within the programmed temperature deadband, following a scheduled or transient change in load.

The reactor plant can be placed under automatic control in the power range between 12.8% load and full load for the following design transients:

A. ±10% step change in load without steam dump.

B. ±5% per minute loading and unloading.

C. 50% load rejection from full power.

D. Turbine trip from 50% power without a reactor trip.

The control system is designed to operate as a stable system over the full range of automatic control throughout core life without requiring operator adjustment of setpoints other than normal calibration procedures.

7.7.1.1.5 Pressurizer Pressure and Water Level Control System

A programmed pressurizer water level as a function of reactor coolant average temperature minimizes the requirements of the chemical and volume control and waste disposal systems resulting from coolant density changes during loading and unloading from full power to zero power.

The pressurizer water level control system establishes, maintains, and restores pressurizer water level within specified limits as a function of the average coolant temperature.

The pressurizer pressure control system maintains plant pressure within an acceptable operating band during steady-state and/or transient conditions.

7.7.1.1.6 Steam Dump System

Following a reactor and turbine trip, sensible heat stored in the reactor coolant is removed without actuation of Main Steam Safety Valves (MSSV) by means of controlled steam dump to the condenser and by injection of feedwater to the steam generators. Reactor coolant system temperature is reduced to the no-load condition. This no-load coolant temperature is maintained by steam bypass to the condensers to remove residual heat.

The advanced digital feedwater control system (ADFCS) measures, indicates, and controls the water level in the two steam generators. The steam dump system is used to minimize the stresses on the primary system induced by disturbances in the secondary plant steam loads. In conjunction with the rod control system, the steam dump system allows the plant to accommodate a 50% load rejection without inducing a reactor trip.

7.7.1.2 Rod Control System

7.7.1.2.1 Control Group Control

7.7.1.2.1.1 General

The rod control system is a solid-state electronic control system that moves and holds the control rods according to system input orders. The rod drive mechanism is an electromagnetic stepping type mechanism with three actuating coils for holding and movement. To hold a control rod, the system keeps a gripper coil energized. To move a rod, the system sequentially energizes and deenergizes the three coils causing the rod to move in discrete steps.

In automatic control the rod control system maintains a programmed reactor coolant average temperature with adjustments of control rod position for equilibrium plant conditions. The reactor control system is capable of restoring programmed average temperature following a scheduled or transient change in load. The coolant average temperature increases linearly from zero power to the full power conditions.

In manual control the operator maintains control of the reactor through bypassing the reactor control unit. By using the bank selector and the IN-HOLD-OUT switches the operator can move the rods either by individual banks or in manual with bank overlap.

The control system will also compensate initially for reactivity changes caused by fuel depletion and/or xenon transients. Final compensation for these two effects is periodically made with adjustments of boron concentration. The control system then readjusts the control rod in response to changes in coolant average temperature resulting from changes in boron concentration.

7.7.1.2.1.2 Rod Control Input Signals

The coolant average temperatures are measured from the hot leg and the cold leg twice in each reactor coolant loop. The average of the four measured average temperatures is the main control signal. This signal is sent to the control rod programmer through a proportional plus rate compensation unit. The control rod programmer commands the direction and speed of control rod motion. A power-load mismatch signal is also employed as a control signal to improve the plant performance. The power-load mismatch channel takes the difference between nuclear power (average of all four power range channels) and a signal of turbine load (first-stage turbine pressure) and passes it through a high-pass filter such that only a rapid change in flux or power causes rod motion. The power-load mismatch compensation serves to speed up system response and to reduce transient peaks.

7.7.1.2.1.3 Rod Control Program

The control group is divided into four banks to follow load changes over the full range of power operation. Each control bank is driven by a sequencing, variable speed rod drive control unit. The rods in each control bank are divided into two subgroups; the subgroups are moved sequentially one step at a time. The sequence of motion is reversible, that is, a withdrawal sequence is the reverse of the insertion sequence. The variable speed sequential rod control affords the ability to insert a small amount of reactivity at low speed to accomplish fine control of reactor coolant average temperature about a small temperature deadband.

Manual control is provided to manually move a control bank in or out at a preselected fixed speed.

Proper sequencing of the control rod assemblies is ensured first, by automatic programming equipment in the rod control system and second, through administrative control by the reactor plant operator. Startup of the plant is accomplished by first manually withdrawing the shutdown rods to the full OUT position. This action requires the operator to select the SHUTDOWN BANK position on a control board mounted selector switch and then to position the IN-HOLD-OUT lever (which has a spring return to the HOLD position) to the OUT position.

Control rod assemblies are then withdrawn under manual control of the operator by first selecting the MANUAL position on the control board mounted selector switch and then positioning the IN-HOLD-OUT lever to the OUT position. In the MANUAL selector switch position, the rods are withdrawn (or inserted) in a predetermined programmed sequence by the automatic programming equipment.

When the reactor power reaches approximately 12.8%, the operator may select the AUTOMATIC position, where the IN-HOLD-OUT lever is out of service and rod motion is controlled by the reactor control and protection systems. A permissive interlock limits automatic control to reactor power levels above 12.8%. In the AUTOMATIC position, the rods are again withdrawn (or inserted) in a predetermined programmed sequence by the automatic programming equipment.

Programming is set so that as the first bank out (control bank A) reaches a preset position near the top of the core, the second bank out (control bank B) begins to move out simultaneously with the first bank. When control bank A reaches the top of the core, it stops, and control bank B continues until it reaches a preset position near the top of the core where control bank C motion begins. This withdrawal sequence continues until the plant reaches the desired power level. The programmed insertion sequence is the opposite of the withdrawal sequence, i.e., the last control bank out is the first control bank in.

With the simplicity of the rod program, the minimal amount of operator selection and two separate direct position indications available to the operator, there is very little possibility that rearrangement of the control rod sequencing could be made.

Twenty-one of 29 control rods are used for reactivity control to maintain the programmed average coolant temperature as power level changes. The remainder are reserved for reactor shutdown.

7.7.1.2.2 Shutdown Group Control

The shutdown groups of control rods together with the control group are capable of shutting the reactor down. They are used in conjunction with the adjustment of chemical shim and the control group to maintain an adequate shutdown margin of at least 1% with a stuck control rod for all normal operating conditions. These shutdown groups are manually controlled, except for automatic trip signals, and are moved at a constant speed. They are fully withdrawn during power operation and are withdrawn first during startup. Criticality is always approached with the control group after withdrawal of the shutdown groups.

7.7.1.2.3 Control Rod Drive Performance

The control group is driven by a sequencing, variable speed rod drive programmer. In the control group of rod cluster control assemblies, control subgroups (each containing a small number of rod cluster control assemblies) are moved sequentially in a cycle such that all subgroups are maintained within one step of each other.

The sequence of motion is reversible, that is, withdrawal sequence is the reverse of the insertion sequence. The sequencing speed is proportional to the control signal from the reactor control system. This provides control group speed control proportional to the demand signal from the control system. (See Figure 7.7-3.)

A rod drive mechanism control center is provided to receive sequenced signals from the programmer and to actuate contactors in series with the coils of the rod drive mechanisms. Two reactor trip breakers are placed in series with the supply for these coils. To permit on-line testing, one bypass breaker position is provided across each of the two trip breakers.

7.7.1.2.4 Control Rod Power Supply System

7.7.1.2.4.1 General

The control rod drive power supply concept using a single scram bus system has been successfully employed on all Westinghouse PWR plants. Potential fault conditions with a single scram bus system are discussed in this section. The unique characteristics of the latch-type mechanism with its relatively large power requirements make this system with the redundant series trip breakers particularly desirable.

The solid-state rod control system is operated from two parallel connected 400-kVA generators (Figure 7.7-4) which provide a 260-V, line-to-line, three- phase, four-wire ac power to the rod control circuits through two series connected reactor trip breakers. This ac power is distributed from the trip breakers to a lineup of identical solid-state power cabinets using a single overhead run of enclosed bus duct which is bolted to and therefore comprises part of the power cabinet arrangement. The alternating current from the motor-generator sets is converted to a profiled direct current by the power cabinet and is then distributed to the mechanism coils. Each complete rod control system includes a single 70-V dc power supply that is used for holding the mechanisms in position during maintenance of normal power supply.

This 70-V supply, which receives its input from the ac power source downstream of the reactor trip breakers, is distributed to each power cabinet and permits holding mechanisms in

groups of four manual positioning switches located in the power cabinets. The output capacity of this 70-V dc supply is 50 amp. The system configuration limits the holding capability to eight rods assuming that the dc holding function is used in only one power cabinet at a time.

Current to the mechanisms is interrupted by opening either of the reactor trip breakers. The 70-V dc maintenance supply will also be interrupted since this supply receives its input power through the reactor trip breakers.

The trip breakers are arranged in the reactor trip switchgear in individual metal-enclosed compartments. The 1000-amp bus work, making up the connections between scram breakers, will be separated by metal barriers to prevent the possibility that any conducting object could short circuit or bypass scram breaker contacts. Figure 7.7-4 indicates the arrangement of this equipment.

The 70-V dc holding supply and associated switches have been provided to avoid the need for bringing a separate dc power source to the rod control system during maintenance on the power cabinet circuits. This source is adequate for holding a maximum of eight mechanisms and satisfies all maintenance holding requirements.

7.7.1.2.4.2 Control Rod Power Supply Connections

The control rods are divided into banks that are further divided into two groups each. The banks are moved such that the groups of a bank are always within one step of each other. Groups of rods consist of two or more rods that are electrically parallel to step simultaneously.

The banks and groups are distributed among four solid-state power cabinets as shown below:

Control Bank A - Group 1	Control Bank A - Group 2
Control Bank C - Group 1	Control Bank C - Group 2
Shutdown Bank A - Group 1	Shutdown Bank A - Group 2
Control Bank B - Group 1	Control Bank B - Group 2
Control Bank D - Group 1	Control Bank D - Group 2
Not Used	Not Used

Each power cabinet is designed to operate three groups of mechanisms such that only one group can be moved at a time while the other two groups are held in position. Therefore, the distribution permits no more than two banks to move at a time.

7.7.1.2.5 Control Rod Power Supply Evaluation

The rod control system equipment is assembled in enclosed steel cabinets. Three-phase power is distributed to the equipment through a steel-enclosed bus duct, bolted to the cabinets. Direct current power connections to the individual mechanisms are routed to the reactor head area from the solid-state cabinets through insulated cables, enclosed junction boxes, enclosed reactor containment penetrations, and sealed connectors. In view of this type of construction, any accidental connection of either an ac or dc power source, either internal or external to the cabinets, is not considered credible.

7.7.1.2.5.1 Alternating Current Power Connections

The three-phase four-wire supply voltage required to energize the equipment is 260 V line to line, 58.3 Hz, 400-kVA capacity, zigzag connected. It is unlikely that any power supply, and in particular one as unusual as this four-wire power source could be accidently connected in phase in the required configuration. Also it should be noted that this requires multiple connections, not single connections. The closest outside sources available in the plants are 480-V auxiliary power sources and 208-V lighting sources.

Connections of either a 480-V or 208-V, 60-Hz source to the single ac bus supplying the rod control system causes currents to flow between the sources due to an out-of-phase condition. These currents flow until the generator accelerates to a speed synchronous with the 60-Hz outside source, a time sufficient to trip the generator breakers. The out-of-phase currents for an unlimited capacity outside source, an outside source with a capacity equivalent to the normal generator kVA, and for either one or two motor-generator sets in service are tabulated in Table 7.7-1.

All of the currents in Table 7.7-1 are sufficiently high to trip out the generator breakers on overcurrent. This trip-out is detectable by annunciation in the control room. If the outside power source trips, the connection is of no concern.

Each solid-state power cabinet is tied to the main ac bus through three fused disconnect switches: one each for the stationary gripper coil circuits, the movable gripper coil circuits, and the lift coil circuits. Reference voltages to operate the control circuits for all three coil circuits must be in phase with the supply to all coil circuits for proper operation of the system. If the outside power source were brought into an individual cabinet, nine normal source connections would have to be disconnected and the outside source would have to be tied in phase to the proper nine points plus one neutral point to allow movement of the rods. This is not considered credible.

Connection of a single-phase ac source (i.e., one line to neutral) is also considered improbable. This would again require a high capacity source which would have to be connected in phase with the nonsynchronous motor-generator set supply. Again more than one connection is needed to achieve this condition. Each power cabinet contains three alarm circuits (stationary, movable, and lift) that would annunciate the condition to the operator. In addition, calculations show that a single-phase source of 208 V, 260 V, or 480 V would not supply enough current to hold the rods. Therefore, a jumper across two trip circuit breaker contacts in series

that results in a single phase remaining closed would not provide sufficient current to hold up the rods.

The normal source generators are connected in a zigzag winding configuration to eliminate the effects of direct current saturation of the machines resulting from the direct currents that flow in the half wave bridge rectifier circuits. If this connection were not used, the generator core would saturate and loss of generating action would occur. This condition would also occur in a transformer. An outside source not having the zigzag configuration would have to have a large capacity (>400 kVA) to avoid the loss of transformer action from saturation.

Most of the components in the equipment are applied with a 100% safety factor. Therefore, the possibility exists that the system will operate at 480 V with a source of sufficient capacity. The system will definitely operate at 208 V with a source of sufficient capacity.

The connection of an outside source of ac power to one rod control system would first require a need for this source. No such need exists since two power sources (motor-generator sets) are already provided to supply the system. If the source were connected in spite of the need, extreme measures would have to be taken to complete the connection. The outside source would have to be a large capacity (400-kVA) one. The currents that flow would require the routing of large conductors or bus bars, not the usual clip leads. Then, the disassembly of switchgear or enclosed bus duct would be required to expose the single ac bus. Large bolted cable or bus bar terminations would have to be completed. A total of four conductors would have to be connected in phase with a nonsynchronous source. To expect that a connection could be completed with the equipment either energized or deenergized, in view of the obstacles which would prevent such a connection, is incredible. However, even if the connection were completed, the outside source connection would be detectable by the operator through the tripping of the generator breakers.

7.7.1.2.5.2 Direct Current Power Connections

An external dc source could, if connected inside the power cabinet, hold the rods in position. This would require a minimum supply voltage of 50 V. Since the holding current for each mechanism coil is 4.4 amp, the dc current capacity would have to be approximately 128 amp to hold all rods. Achieving this situation would require several acts: bringing in a power source which is not required for any type of operation in the rod control system, preferentially connecting it into the system at the correct points, and actuating specific holding switches so as to interconnect all rods. Closure of 12 switches in four separate cabinets would be required to hold all rods. One switch could hold as many as four rods.

Should an external dc source be connected to the system, the system is provided with features to permit its detection.

Each solid-state power cabinet contains circuitry which compares the actual currents in the stationary and movable gripper coils with the reference signals from the step sequencing unit (slave cycler). In taking a single step, the current to the stationary gripper coil will be profiled from the holding value to the maximum, to zero, and return to holding level. Correspondingly, the movable gripper coil must change from zero to maximum and return to zero. The

pressure of an external dc source on either the stationary or movable coils would prevent the related currents from returning to zero.

This situation would be instantaneously annunciated by way of the comparison circuit. Therefore, any rod motion would actuate an alarm indicating the presence of an external dc source. In addition, an external dc source would prevent rods from stepping. Thus, an external source could be detected by the rod position indication system indicating failure of the rod(s) to move.

Connection of an external dc power source to the output lines of the 70-V dc power supply can be detected by opening the three-phase primary input of the supply and checking the output with a voltmeter.

7.7.1.2.5.3 Evaluation Summary

In view of the preceding discussion, the postulated connection of an external power source (either ac or dc) or short circuits that could prevent dropping of the rods is not considered credible. Specifically,

a. The need for an outside power source has been eliminated by incorporating built-in holding sources as part of the rod control system and by providing two motor-generator sets.

b. The equipment is contained within enclosed steel cabinets precluding the possibility of an accidental connection of either ac or dc power in the cabinets.

c. Alternating current power distribution is accomplished using steel-enclosed bus duct. The high capacity (400-kVA) ac power source is unique and not readily available. Multiple connections are required.

d. Direct current power is distributed to the individual mechanisms through insulated cables and enclosed electrical connections precluding the accidental connection of an outside dc source external to the cabinets. The high capacity dc source required to hold rods is not readily available in the rod control system, would require multiple connections, and would require deliberate positioning of switches within the enclosed cabinets.

e. Provisions are made in the system to permit detection of an external dc source that could preclude a rod release.

The total capacity of the system including the overload capability of each motor-generator set is such that a single set out of service does not cause limitations in rod motion during MODES 1 and 2. In order to minimize reactor trip as a result of a unit malfunction, the power system is normally operated with both units in service.

There is no possible failure in the power cabinet that can cause more than one group of four mechanisms to be moved at one time. First, to allow motion of mechanisms in a second group while one group is moving, the circuits for the stationary, movable, and lift coils must all fail simultaneously. However, should this occur, the circuit arrangement for the movable and lift coils will cause the current available to the mechanism's coils to divide equally between coils in the two groups. It has been shown by test that the L-106 mechanism will not operate on half current. Finally, a multiplexing failure detection circuit is included in each power cabinet which stops rod withdrawal or insertion should such a failure occur.

7.7.1.2.6 Rod Position Indication System

Two separate systems are provided to sense and display control rod position as described below:

7.7.1.2.6.1 Microprocessor System

The microprocessor rod position indication (MRPI) system consists of a digital detector assembly for each rod, a data cabinet located inside containment, and display racks located in the relay room. Rod position data is displayed on a color cathode ray tube (CRT) in the control room and also transmitted to the plant process computer system. The data cabinet inside containment contains two multiplexers(MUX), which take rod position information from each of the rods and transmit it to the processors, which are in the display racks located in the relay room. One processor supplies information to the CRT located on the control board, the other processor supplies information to the plant process computer system. Both processors are required to produce a block rod withdrawal signal. The plant process computer system backup can be used if the CRT in the MRPI system becomes inoperable.

The MRPI system directly senses rod position in intervals of 12 steps for each rod. The digital detector assemblies consist of 20 discrete coil pairs spaced at 12-step intervals as shown in Figure 7.7-4a. The MRPI system will normally indicate zero rod position until the rod goes from zero steps to the first step. At that time the indication will normally switch from zero to 12. When the rod goes from >one to two steps, the indication will normally switch from 0 to 8. The rod will normally be within +7 to –5 steps of the MRPI indication; however, if the transition uncertainty of +2 steps is considered, the rod will always be within +9 steps of the MRPI indication.

The safety concerns associated with the MRPI system are associated with generation of a block rod withdrawal signal and the ability to comply with the rod misalignment requirement.

The MRPI system consists of one digital detector assembly per rod. All the detector assemblies are multiplexed and become input to two redundant MRPI signal processors. Each signal processor independently monitors all rods and senses a rod bottom for any rod. A rod bottom signal from both signal processors is required to generate a block rod withdrawal signal. The two-out-of-two coincident signal requirement reduces inadvertent block rod withdrawal but does not affect the accident analysis assumptions.

The MRPI system is designed to satisfy the rod misalignment requirement. The MRPI system determines rod position in 12-step intervals. The true rod position is always within ±9 to –7 steps of the indicated position (±7 to –5 steps due to the 12-step interval and ±2 steps transition uncertainty due to processing and coil sensitivity). Assume a rod becomes stuck at zero steps. The MRPI indication for that rod could be 8. Since the step counter does not know the rod is stuck, it would continue to count. The rod deviation alarm will be generated by the plant process computer system. The alarm would be generated when the step counter reaches 20 steps (20 steps--MRPI indication of 8 steps = ± setpoint of 12 steps). Therefore, the maximum deviation possible is 20 minus 0 or 20 steps. This is bounded by the accident analysis, which assumes 25-step rod misalignment. Another possible situation is the rod to rod misalignment within a group or a bank. Assume the inoperable rod is at step 0. The MRPI indi-

cation for this rod could be 8 steps. If the others within the group or bank are aligned so that their MRPI indicated position is also 8 steps, the highest actual position for any of these rods would be 14 steps. Therefore, if the rods are required to have the same indicated position, the maximum actual position difference would be 14 minus 0 or 14 steps. This is bounded by the accident analysis, which assumes 25-step rod misalignment.

The MRPI system is not Class 1E. The system is not required for safe shutdow of the plant and is not required to operate during or after a seismic event.

7.7.1.2.6.2 Digital System

The digital system counts pulses generated in the rod drive control system. One counter is associated with each group of rods within a bank, making a total of 10 for the four control banks and one shutdown bank. Readout of the digital system is in the form of digital add-subtract counters reading the number of steps of rod withdrawal with one display for each. These readouts are mounted on the control panel.

The digital and MRPI systems are separate systems; each serves as backup for the other. Operating procedures require the reactor operator to compare the system readings upon recognition of any apparent malfunction. Therefore, a single failure in rod position indication does not in itself lead the operator to take erroneous action in the operation of the reactor.

7.7.1.2.6.3 Actual Position Indication

This system derives the position signal directly from measurements of the driven rod position using the MRPI system described in Section 7.7.1.2.6.1, Item 1.

7.7.1.2.6.4 Demand Position Indication

The bank demand position signal is derived from the programmer and is displayed on an add-subtract pulse counter mounted in the control console.

7.7.1.2.6.5 Rod Deviation Alarm

Both the demand and actual rod position signals are monitored by a rod deviation monitoring system that provides an alarm whenever the individual rod position signal deviates from the bank demand signal by a preset limit.

7.7.1.2.7 Pulse-to-Analog Converter

A pulse-to-analog converter is furnished for each control bank. The converter and the plant process computer receive the control bank demand position pulses from the rod control system. The pulse to analog converter converts the count signal to an equivalent dc analog signal proportional to bank demand. This signal is fed to the bank insertion limit monitor and plant process computer system. The pulse-to-analog converter has a digital display inside the rod position indication cabinet with provisions for manually pulsing the counter up or down.

7.7.1.2.8 Interlocks and Rod Stops

The control group used for automatic control is interlocked with measurements of turbine-generator load and reactor power to prevent automatic control rod withdrawal below 12.8% of nominal power. The manual and automatic controls are further interlocked with measurements of nuclear flux, delta T, and rod drop indication to prevent approach to an overpower condition. The logic diagram of these interlocks is shown in Drawing 33013-1353, Sheet 15.

The following permissives (rod stops) are provided in the rod control system and are listed in Table 7.7-2.

A. Overpower rod stops (for withdrawal).

1. Power range nuclear instrumentation system high flux, setpoint 103% power with a one-of-four coincidence; operates in the manual and automatic modes.
2. Intermediate-range nuclear instrumentation system high flux, setpoint is current equivalent to 20% power with a one-of-two coincidence; operates in the manual and automatic modes; the rod stop is blocked when the intermediate-range nuclear instrumentation system trip is blocked.
3. Overtemperature delta T, setpoint is 3% of rated ΔT below the trip setpoint with a two-of-four coincidence; operates in the manual and automatic modes.
4. Overpower delta T, setpoint is 3% of rated ΔT below the trip setpoint with a two-of-four coincidence; operates in the manual and automatic modes.

B. Low power rod stop.

Low power rod stop prevents outward rod motion in automatic when turbine impulse pressure is less than 12.8% power. This prevents unstable low power operation.

C. Auto rod stop on dropped rod.

Dropped rod automatic rod stop has two setpoints or detected conditions: first, if a 5% power decrease occurs in 5 sec on one-of-four power range nuclear instrumentation system, and second, if any of the following conditions exist, outward rod motion will be prohibited.

D.

- any rod in the shutdown bank A or control bank A at 0 steps
- any rod in control bank B at 0 steps with bank B, C, or D $\geq$ 32 steps
- any rod in control bank C at 0 steps with bank C or D $\geq$ 32 steps
- any rod in control bank D at 0 steps with bank D $\geq$ 32 steps

E. T_{AVG} - average T_{AVG} channel deviation rod stop.

A temperature difference of ±4°F between any one of the four T_{AVG} channels and average T_{AVG} will actuate a control room alarm and stop automatic rod movement.

7.7.1.2.9 Rod Insertion Limit Circuit

The rod insertion limit circuit is designed to provide a continuously calculated insertion limit for each of the control banks that is variable with power. It provides alarms to ensure that the operator keeps the control rods located within the limits. The rod insertion limit circuit performs its function by receiving control bank position data from the rod control system. It compares this data to the calculated limit that is determined by reactor power as measured from the coolant loop average differential temperature (delta T).

The rod insertion limits ensure that adequate shutdown margin exists to shut down the reactor at any time and condition in the life of the core. In addition, it guarantees protection from core damage due to a postulated rod ejection accident, as well as possible core damage due to uneven core power distribution from misaligned control rods at high power (e.g., provides for acceptable core peaking factors).

The control rod insertion limits, Z_{LL}, are calculated as a linear function of power and reactor coolant temperature. The equation is

$$Z_{LL} = A\ (\text{average delta T}) + B\ (\text{average } T_{AVG}) + C$$

where A, B are preset manually adjustable gains and C is a preset manually adjustable bias. Average delta T and average T_{AVG} are discussed in Section 7.7.5.

One insertion limit monitor is provided for each control bank. The Low alarm Bank D only alerts the operator of an approach to a reduced shutdown reactivity situation requiring boron addition by following normal procedures with the chemical and volume control system. Actuation of the Low-Low alarm (Banks A, B, C, and D) requires the operator to take immediate action to add boron to the system by any one of several alternative methods.

7.7.1.2.10 Rod Drop Protection

Two independent systems are provided to sense a dropped rod, (1) a rod bottom position detection system and (2) a system that senses sudden reduction in out-of-core neutron flux. Both protection systems initiate protective action in the form of blocking of automatic rod withdrawal. This action compensates for possible adverse core power distributions and permits an orderly retrieval of the dropped rod cluster control assembly.

The primary protection for the dropped rod cluster control assembly accident is the rod bottom signal derived for each rod from its individual position indication system. With this system, initiation of protection is not dependent on location, reactivity worth, or power distribution changes.

Backup protection is provided by use of the out-of-core power range nuclear detectors and is particularly effective for larger nuclear flux reductions occurring in the region of the core adjacent to the detectors.

The rod drop detection circuit from nuclear flux consists basically of a comparison of each ion chamber signal with the same signal taken through a first-order lag network. Since a dropped rod cluster control assembly will rapidly depress the local neutron flux, the decrease

in flux will be detected by one or more of these four sensors. Such a sudden decrease in ion chamber current will be seen as a difference signal. A negative signal output greater than a preset value (approximately 5%) from any one of the four power range channels will actuate the rod drop protection.

Figure 7.7-6 indicates schematically the dropped rod alarm and the nuclear protection system in general. The potential consequences of any dropped rod cluster control assembly without protective action are limited to localized fuel failure, and the integrity of the reactor coolant system is maintained.

7.7.1.2.11 Asymmetric Rod Cluster Control Assembly Withdrawal

In a generic letter to licensees, Generic Letter 93-04, on June 21, 1993, the NRC staff identified actions to be taken by licensees related to the Salem rod control system failure event. Rochester Gas and Electric Corporation responded (*References 2* and *3*) to the generic letter with detailed information on additional surveillance, troubleshooting, and monitoring that had been conducted; procedural changes and administrative controls that had been put into place; training on the Salem event that had been instituted; and a Westinghouse Owners Group initiative, which had demonstrated that for all Westinghouse plants there was no safety significance for an asymmetric rod cluster control assembly withdrawal related to the generic letter. Based on the results of the Westinghouse Owners Group initiative, RG&E concluded that the licensing basis for Ginna Station is still satisfied with regard to General Design Criterion 25 (or equivalent) for system response to a single failure in the rod control system.

The basis for this determination was enhanced by implementation of the following option as recommended by the Westinghouse Owners Group: (1) modification of the current order timing scheme to preclude asymmetric rod withdrawal in the presence of a rod control system failure and (2) implementation of a new current order surveillance test performed on a refueling outage basis that verifies that control rod drive mechanism current orders are not corrupted. Ginna Station successfully performed the lead plant testing on the timing change on April 14, 1994. Existing rod control system logic cabinet slave cycler decoder cards for lift coils, stationary coils, and movable coils were replaced with modified cards. Diodes were repositioned to implement a revised Westinghouse standard timing scheme. A fault similar to those experienced at Salem would now result in either conservative or no rod motion. This change does not affect normal rod movement and is transparent to operators.

A generic assessment of asymmetric rod cluster control assembly withdrawal was performed by Westinghouse and reported in WCAP 13803. A rod control system evaluation program performed on behalf of all Westinghouse plants was developed (WCAP 13864) to determine the type of motion that could occur when control rod drive mechanisms are subjected to corrupted current orders under varying conditions.

Test results from the Ginna Station lead plant tests were reviewed by the NRC and the as-tested modified timing sequence found acceptable (*Reference 4*). The Westinghouse Owners Group closure of this generic issue was provided to the NRC in *Reference 5* and was approved by the NRC in *Reference 6*. In *Reference 7*, the NRC stated that RG&E's responses to Generic Letter 93-04 were found to be acceptable and that the generic letter for Ginna Station was closed.

7.7.1.2.12 Rod Control Cabinet Cooling

The control rod drive logic cabinet and power cabinets located in the basement of the Intermediate Building (clean side) have been provided with packaged air conditioning units (door mounted). These air conditioning units are designed to maintain the internal cabinet temperatures within the normal intermediate building temperature limits. A high internal cabinet temperature alarm has also been provided (see Drawing 33013-1872).

7.7.1.3 Pressurizer Pressure and Level Control

7.7.1.3.1 Pressure Control

The reactor coolant system pressure is maintained at constant value by using heaters in the water region and spray in the steam region of the pressurizer. Electrical immersion heaters are located near the bottom of the pressurizer. A portion of the heater groups are proportional heaters and are used for small pressure variation control and to compensate for heat losses. The remaining backup heaters are turned on either when the pressurizer pressure controller signal is below a preset value or when pressurizer level is above a preset level setpoint.

Spray valves are located at the top of the pressurizer. Spray is initiated when the pressure controller signal is above a preset setpoint. Spray rate increases proportionally with increasing pressure until it reaches the maximum spray capacity. Steam condensed by spray reduces the pressurizer pressure. A small continuous spray is normally maintained to reduce thermal stresses and thermal shock when the spray valves open and to maintain uniform water chemistry and temperature in the pressurizer.

Two Pressurizer Power-Operated Relief Valves (PORV) limit system pressure below 2350 psia for large load reduction transients.

One relief valve is operated on the pressurizer pressure controller signals; the other one is operated on the actual pressure signal. An interlock is provided so that if a second pressure channel indicates low at the time the relief valve operation is called for by the control channel, the valve activation is blocked.

Two spring-loaded pressurizer safety valves limit system pressure below 2750 psia following a complete loss of load without direct reactor trip or turbine bypass. Under locked-rotor conditions, the pressurizer safety valves would maintain reactor coolant system pressure at a level below 2836 psia, which is acceptable.

The pressurizer has four pressure transmitters which provide signals used for indication, control, and protection. Each of the four channels may be displayed on a recorder by selecting the desired channel with the pressurizer pressure recorder selector switch. Pressurizer pressure is displayed on the main control board by four meters, with a range of 1700-2500 psig.

A pressure transmitter has also been installed on the pressurizer that is fully qualified to IEEE 323 and IEEE 344. This transmitter, which is powered from a Class 1E source, has its output continuously recorded to provide reactor coolant system wide-range pressure indication in the event of loss of offsite power.

To provide the control signal to the various pieces of equipment the actual system pressure is compared with the setpoint pressure. The output of the comparison is supplied to a proportional integral derivative (PID) circuit. The proportional part of the PID output is proportional to the actual pressure minus the reference pressure. Added to this is the integral component which accounts for the length of time a difference exists between actual and reference signals. Also added is a correction for rate-of-change of deviation signal to help speed up system response. This rate function is set to zero at Ginna Station.

7.7.1.3.2 Level Control

The pressurizer level control system maintains the pressurizer level within a programmed band consistent with T_{AVG}. The programmed level is a sufficient margin above the low level alarm where the heaters turn off. Letdown isolation is then initiated. The programmed level is sufficiently low to ensure that there is enough steam volume. A programmed level is used to limit charging pump speed change demands on a transient where T_{AVG} is changing, in contrast with a constant pressurizer level.

7.7.1.4 Turbine Bypass

A turbine bypass system is provided to accommodate a reactor trip with turbine trip, loss of 50% of rated load without reactor and turbine trip, or a turbine trip without reactor trip below 50% of rated load. The turbine bypass system removes steam to reduce the transient imposed upon the reactor coolant system so that the control rods can reduce the reactor power to a new equilibrium value without causing overtemperature-overpressure conditions in the reactor coolant system.

A turbine bypass is actuated by the coincidence of compensated coolant average temperature higher than the programmed value by a preset value and electrical load decrease greater than a preset value. All the turbine bypass valves stroke to full open immediately upon receiving the bypass signal. The bypass valves are modulated by the compensated coolant average temperature signal after they are full open. The turbine bypass reduces proportionately as the control rods act to reduce the coolant average temperature. The artificial load is therefore removed as the coolant average temperature is restored to its programmed equilibrium value.

The turbine bypass capacity is discussed in UFSAR Section 10.7.1. Analyses have shown that the capacity is adequate for the design basis transients described at the beginning of this section. The bypass flows to the main condenser.

7.7.1.5 Steam Generator Level Control

The steam generator water level is controlled by a digital microprocessor controlled steam generator feedwater control system termed the advanced digital feedwater control system (ADFCS). The ADFCS provides automatic control of the programmed level in the steam generators without the need for operator intervention over the range of power operation. This range of operation extends from the point at which the transition is made from feeding via the preferred auxiliary feedwater system to feeding via the main feedwater system on the Main Feedwater bypass valve (approximately 2-3% power) up to full power. One control system operates on both the Main Feedwater Regulating Valve (MFRV) and Main Feedwater bypass

valves without the need for manual action to switch operating modes or switch between valves.

The basic control system functional design is similar to the original analog feedwater control system; however, a number of features have been added to improve the performance of the system. Functional block diagrams of the system are shown in Figures 7.7-14, 7.7-15, and 7.7-16. A feedwater temperature-dependent gain has been added to the narrow-range level regulator as shown in Figures 7.7-14 and 7.7-15. The response of steam generator water level to changes in feedwater flow is a function of feedwater temperature. At low feedwater temperatures and low power levels the level response exhibits more of the classical shrink/ swell effect. This non-minimum-phase response is a destabilizing influence on the feedback control system. Therefore the control system lowers the gain at low feedwater temperature to preserve stability and increases the gain at high feedwater temperature to improve the response of the system. Derivative action has also been added to the level controller to provide some anticipatory action based on the rate of change of level.

The flow regulator has a high-power mode and a low-power mode which is shown in Figure 7.7-15. This is necessary because the feedwater flow and steam flow signals are not usable at low power levels. The switching between these two modes is done automatically within the system and is performed in a bumpless manner without the need for operator action. At low power levels a load index is used as a feed forward signal to anticipate the need for changes in feedwater flow in advance of an actual change in level. The wide-range steam generator water level measurement is used for this purpose. This signal changes with plant load and also leads the response of the narrow-range measurement.

The high-power load regulator uses the standard steam-flow-feedflow mismatch input. However, the loop steam flow signal is compensated with high-pass filtered loop average steam flow to improve the response of the system to steam-flow-induced transients, such as a large load change. Initially, during a large load change, there is a rapid decrease in steam flow. If the compensation on steam flow were not present, this would cause the control system to close the feedwater control valve, which is opposite to the desired response. As was the case with the lowpower mode load index, the feed flow and steam flow signals will automatically be switched in and out of the system. This mode switching is performed independently of which valve (Main Feedwater Regulating Valve (MFRV) or Main Feedwater bypass valve) is being used for control.

An additional unique feature of the control system design is the valve lift calculator or the "linearization circuit." The block diagram of this part of the system is shown in Figures 7.7-15 and 7.7-16. The output of the flow regulator is a demanded feedwater flow. The relationship between changes in valve position and changes in feedwater flow is highly nonlinear. It depends on the valve flow characteristic, pressure drop across the system, and system hydraulic characteristics. The linearization circuit calculates the amount that the control valve(s) must be moved to accomplish the change in flow demanded by the control system. The valve lift calculator operates on both the Main Feedwater Regulating Valve (MFRV) and Main Feedwater bypass valves and is independent of the control mode. The Main Feedwater bypass and Main Feedwater Regulating Valves (MFRV) are stroked open sequentially with some overlap. Either of the valves may be operated in manual while leaving the other valve

in auto as shown in Figure 7.7-16. The valves are closely coupled through the algorithms in the valve demand portion of the system in order to minimize disturbances on the process (flow and level).

As the plant is taken from low power to high power, the Main Feedwater bypass and Main Feedwater Regulating Valves (MFRV) are opened sequentially. Before the Main Feedwater bypass valve reaches its nominal full-open condition, the control system logic begins to open the Main Feedwater Regulating Valve (MFRV) from its full-closed position. At full power, the valves normally operate in a "split-range" fashion with both valves open as controlled by the system's valve sequencing logic. Therefore, there is no valve "switchover" at a particular power level. The normal sequence can be altered by placing either or both of the valves in manual control. Also, at full power operation, the system can be operated with only the Main Feedwater Regulating Valve (MFRV) valve open by taking manual control of the Main Feedwater bypass valve and closing it.

The feedwater control system includes signal validation for input signals to reduce the probability of a failed sensor causing an upset condition in the plant. The input channel signal validation configuration is shown in Figure 7.7-14. When three channels of a variable are available, the median signal select method is used. In this method, the middle value of the three input values is used as the input to the control algorithms. This will prevent high or low failures of a single input from affecting the control system. When two input channels of a variable are available, an arbitration method is used. In this method, the two inputs are compared, and if they agree to within a certain criterion, they are averaged and the result is sent to the control algorithms. If the two channels disagree significantly, they are compared to an estimate of the variable, which is calculated using other process measurements. The primary input that is closest to the estimate is used in the control system.

The signal validation feature of the feedwater control system allowed elimination of the low feedwater flow reactor trip that was incorporated into the original design of the plant. WCAP 12347 provides justification for elimination of the trip (*Reference 1*).

A summary of the signals input to the advanced digital feedwater control system is as follows:

Number of Process Variable	Channels
Narrow-range steam generator water level	6, 3/loop
Wide-range steam generator water level	6, 3/loop
Steam flow	6, 3/loop
Feedwater flow	6, 3/loop
Feedwater temperature	2, 1/loop
Steam generator pressure	6, 3/loop
Turbine first stage pressure	2
Feedwater header pressure	2

Valve position	4, 1/valve

Controls for the two Atmsopheric Relief Valves (ARV) have also been incorporated into the advanced digital feedwater control system. Each Atmsopheric Relief Valves (ARV) is now controlled by a validated, median signal-selected steam generator pressure signal (Section 10.3.2.5).

7.7.1.6 Steam Generator Overfill Protection

In a generic letter to licensees, Generic Letter 89-19, on September 20, 1989, the NRC staff identified actions to be taken by licensees related to automatic steam generator overfill protection. Rochester Gas and Electric Corporation's initial response to the generic letter provided overfill protection information as it related to the then existing analog feedwater control system. Upon installation of the new advanced digital feedwater control system (ADFCS) in 1991 (see Section 7.7.1.5), the NRC requested that the original response to the generic letter be updated with regard to the ADFCS. Rochester Gas and Electric Corporation's updated response (*Reference 8*) was accepted by the NRC (*Reference 9*) as confirmation that a satisfactory design for steam generator overfill protection was provided, closing out Generic Letter 89-19 for Ginna Station.

7.7.2 CONTROL SYSTEM EVALUATION

7.7.2.1 Plant Stability

The rod control system is designed to limit the amplitude and the frequency of continuous oscillation of coolant average temperature about the control system setpoint within acceptable values. Continuous oscillation can be induced by the introduction of a feedback control loop with an effective loop gain that is either too large or too small with respect to the process transient response, i.e., instability induced by the control system itself. Because stability is more difficult to maintain at low power under automatic control, no provision is made to provide automatic control below 12.8% of full power.

The control system is designed to operate as a stable system over the full range of automatic control throughout core life.

7.7.2.2 Step Load Changes Without Turbine Bypass

A typical power control requirement is to restore equilibrium conditions, without a plant trip, following a plus or minus 10% change in load demand, over the 12.8% to 100% power range for automatic control. The design must necessarily be based on conservative conditions and a greater transient capability is expected for actual operating conditions. A load demand greater than full power is prohibited by the turbine control load limit devices.

The function of the control system is to minimize the reactor coolant average temperature deviation during the transient within an acceptable value and to restore average temperature to the programmed setpoint within an acceptable time. Excessive pressurizer pressure variations are prevented by using spray and heaters in the pressurizer.

The margin to overtemperature high delta T reactor trip is of primary concern for the step load changes. This margin is influenced by nuclear flux, pressurizer pressure, and reactor coolant average temperature and temperature rise across the core.

7.7.2.3 Loading and Unloading

Ramp loading and unloading is provided over the 12.8% to 100% power range under automatic control. The function of the control system is to maintain the coolant average temperature and the secondary steam pressure as functions of turbine-generator load within acceptable deviation from the programmed values. The minimum control rod speed provides a sufficient reactivity rate to compensate the reactivity changes resulting from the moderator temperature coefficient and the power coefficient.

The coolant average temperature is increasing during loading and there is a continuous insurge to the pressurizer resulting from coolant expansion. The sprays limit the resulting pressure increase. Conversely, as the coolant average temperature is decreasing during unloading, there is a continuous outsurge from the pressurizer resulting from coolant contraction. The heaters limit the resulting system pressure decrease. The pressurizer level is programmed such that the water level has an acceptable margin above the low level heater cutout setpoint during the loading and unloading transients.

The primary concern for the loading is to limit the overshoot in coolant average temperature to provide sufficient margin to overtemperature high delta T trip.

The automatic load controls are designed to safely adjust the unit generation to match load requirements within the limits of the unit capability and licensed rating.

7.7.2.4 Loss of Load With Turbine Bypass

The reactor control system is designed to accept a turbine trip from 50% power or 50% loss of load. No reactor trip or turbine trip will be actuated. The automatic bypass system is able to accommodate this abnormal load rejection and to reduce the transient imposed upon the reactor coolant system. The reactor power is reduced at a rate consistent with the capability of the rod control system. Manual control is used when the power is below this value. The bypass is removed as fast as the control rods are capable of inserting negative reactivity.

The pressurizer safety valves might be actuated for the most adverse conditions, e.g., the most negative doppler coefficient and the minimum incremental rod worth. The relief capacity of the Pressurizer Power Operated Relief Valves (PORV) is sized large enough to limit the system pressure to prevent actuation of high-pressure reactor trip for the most adverse conditions.

7.7.2.5 Turbine Trip With Reactor Trip

A turbine-generator unit trip above 50% power is accompanied by reactor trip. With a secondary system design pressure of 1100 psia, the plant is operated with a programmed average temperature as a function of load, with the full load average temperature significantly greater than the saturation temperature corresponding to the Main Steam Safety Valve (MSSV) setpoint. This, together with the fact that the thermal capacity in the reactor coolant system is

greater than that of the secondary system, requires a heat sink to remove heat stored in the reactor coolant to prevent actuation of Main Steam Safety Valves (MSSV) for turbine and reactor trip from full power.

This heat sink is provided by the combination of controlled release of steam to the condenser and by makeup of cold feedwater to the steam generators. The turbine bypass system is controlled from the reactor coolant average temperature signal whose reference setpoint is reset upon trip to the no-load value. Turbine bypass actuation must be rapid to prevent Main Steam Safety Valve (MSSV) actuation. With the bypass valves open the coolant average temperature starts to reduce quickly to the no-load setpoint. A direct feedback of reactor coolant average temperature acts to proportionately close the valves to minimize the total amount of steam bypassed.

Following turbine trip, the steam voids in the steam generators will collapse and the fully opened feedwater valves will provide sufficient feedwater flow to restore water level in the downcomer. The feedwater flow is cut off when the reactor coolant average temperature decreases below a preset temperature value or when the steam-generator water level reaches a preset high setpoint.

Additional feedwater makeup is then controlled manually to restore and maintain steam-generator level while maintaining the reactor coolant at the no-load temperature. Residual heat removal (manually selected) is maintained by the steam-generator pressure controller which controls the amount of steam dump to the condensers. This controller operates the same bypass valves to the condensers which are controlled by coolant average temperature during the initial transient following turbine and reactor trip.

The pressurizer pressure and level fall very fast during the transient resulting from the coolant contraction. If heaters become uncovered following a reactor trip by the automatic low level shutoff, the chemical and volume control system will provide full charging flow to restore water level in the pressurizer. Heaters are then turned on after the pressurizer level has been restored to heat up pressurizer water and restore pressurizer pressure to normal.

The turbine bypass and feedwater control systems are designed to prevent the coolant average temperature falling below the programmed no-load temperature following the trip to ensure adequate reactivity shutdown margin.

7.7.2.6 Control Rod Misalignment

7.7.2.6.1 General

Ginna Station does not have fixed in-core instrumentation. Measurements of core power distribution necessary to provide information to the operator for the control of axial power distribution will be performed by the out-of-core power range nuclear instrumentation. In addition, protection of the core from abnormal axial power distributions is achieved by this same out-of-core nuclear instrumentation. The protection system functions that achieve this protection have been described in Section 7.2. The analytical justification for the use of out-of-core nuclear instrumentation in the control system and the protection system together with supporting experimental data has been reported in WCAP 7208, October 1968.

Abnormal power distribution can also be caused by rods out of position with respect to other bank positions for rods in the same group. The operation of control rods is supervised by the operator who is provided with continuous indication of all control rods. The operator is assisted in this supervision by a rod deviation monitoring program in the computer that will alarm whenever a rod deviates from the bank position by more than a preset amount. In the event the signal for the position of any control rod is lost or suspected of a malfunction, the operator can monitor the core power distribution by signals from the out-of-core nuclear instrumentation, primary coolant system temperature instrumentation, in-core thermocouples, and the in-core flux monitoring system. The checks and periodic tests the operator performs under this condition of plant operation, together with experimental data which demonstrates the sensitivity of the various instrumentation systems to rod misalignment, are presented below.

7.7.2.6.2 Consequences of Rod Misalignment

As discussed below, the immediate consequences of control rod misalignment are tolerable, i.e., in no case would the core safety limits be exceeded. The operator would be made aware of rod misalignment by the direct rod position indication system and associated deviation alarms and would take corrective action as necessary. If the rod position indicator is out of service, the effects of rod misalignment can be noted by checking for normal indications in other variables as discussed in Section 7.7.2.6.5. An emergency procedure has been prepared for the case of a rod position indicator being out of service.

7.7.2.6.3 Analysis of Control Rod Misalignment

Rod cluster misalignment is defined as one cluster being lower than its bank or one cluster being higher than its bank.

If one control rod cluster is below its bank, the hot-channel factors F_Q and $F_{\Delta H}$ remain within design limits. If one control rod cluster is above its bank the design hot-channel factor limits may, in extreme cases, be exceeded. However, even complete rod misalignment (control rod 12 ft out of alignment with its bank) does not result in exceeding core safety limits in steady-state operation at rated power.

7.7.2.6.4 Redundant Checks for Control Rod Malfunction

Analysis has shown that malpositioning of a control rod will not result in exceeding the core safety limits during MODES 1 and 2. In extreme cases, however, core design margins are not maintained, i.e., design hot-channel factors are exceeded. Plant Technical Specifications are therefore placed on control rod positioning. Allowable hot-channel factors are also prescribed in the Technical Specifications.

Monitoring long-term trends in hot-channel factors with core burnup is the responsibility of the reactor engineering staff. The shift operators are responsible at all times for monitoring control rod position and taking corrective action as necessary in the event that a malfunction of the rod control system occurs.

7.7.2.6.4.1 Operator Checks

In order for the operator to fulfill the responsibility for verifying proper rod positioning, several independent and redundant instrumentation systems are provided. The usage of these systems is outlined below, along with appropriate operator action in the event of alarms or abnormal indications.

a. **Rod position indication system.** Each control rod position is continuously indicated on a color cathode ray tube in the control room on the main control board. The cathode ray tube is a component of the microprocessor rod position indication system, which provides input to the cathode ray tube display by a digital detector assembly for each rod (see Section 7.7.1.2.6).

   The plant computer also monitors each position signal and alarms if deviation from the bank demand signal occurs.

b. **Nuclear instrumentation system.** The total signal (top plus bottom detector) for each of the four sets of power range excore nuclear detectors is automatically compared to the average of all channels and an alarm is generated if channel deviation occurs. This alarm alerts the operator to short-term trends which would be indicative of a power tilt.

   Additional symmetric checks and alarms are performed by the plant computer.

   Technical Specifications provide the required actions for rod position indication or step counter inoperability.

c. **Core outlet thermocouples.** Two core outlet thermocouple temperatures can be readily compared, one in the immediate vicinity of the nonindicated rod, and the other in a symmetric location far away from the control rod. Excessive differences between the two temperatures would be indicative of control rod malfunction. In the core there are at least two pairs of symmetric thermocouples suitable for monitoring any suspect control rod.

   In addition to this operator check, during normal operation the plant computer also monitors all thermocouples and alarms abnormal conditions.

d. **In-core movable detector system.** Axial movable detector traces can easily be taken by the shift operators and require no data analysis or evaluation. Just as for the thermocouple check above, axial traces in two symmetric locations would be compared. One trace would be near the suspect rod, and the other in a symmetric location further away. If the deviation between the two traces is excessive, control rod malfunction is indicated.

   At least two pairs of symmetric movable detector locations are available for each suspect control rod in the core.

7.7.2.6.4.2 Additional Periodic Tests

In addition to routine operator surveillance and the checks described above, normal plant instructions and procedures include the following tests to be performed on a periodic basis. These also constitute independent checks of correct control rod operation.

a. **Rod exercise test.** As required by the Technical Specifications, any rod not fully inserted is exercised periodically to verify correct operation. In the event a rod position indicator is

out of service, positive verification that the rod has moved can be accomplished by monitoring the neighborhood of the non-indicated rod by in-core detectors.

b. **In-core power distribution maps.** Approximately once a month in MODES 1 and 2, the Technical Specifications require that a complete core power distribution map be made by use of the in-core movable detectors. Additional complete or partial maps may be made whenever desired. Any misaligned rod that has a significant effect on hot-channel factors or burnup would be noticeable from the results of these maps.

7.7.2.6.4.3 Details of Instrumentation System

Pertinent details of the power range nuclear instrumentation and in-core movable detectors are discussed in the following sections.

7.7.2.6.4.4 Power Range Nuclear Instrumentation

The power range nuclear instrumentation system is described in Section 7.7.3.

There are four channels, each consisting of two long ion chambers (top and bottom detectors). These channels are on the 45 degree and 135 degree axis with respect to the core. Detector position and analog circuitry is shown in Figures 7.7-7, 7.7-8, and 7.7-9.

Two types of signals are provided from each channel: a calibrated power signal, and a calibrated current signal from each of the two detectors.

The calibrated current signal represents the normalized signal from each detector. At rated full power, with nominal full power conditions and a flat power distribution, each calibrated current signal is set equal to 100%. In this way, detector sensitivity and geometry effects are cancelled. This calibration is done by instrument technicians on the basis of the plant startup tests and results of subsequent in-core power distribution studies. The total power signal is calibrated by the operators each day (or more frequently if necessary) such that all channels indicate the total reactor power as determined by calorimetric measurements.

The delta-current indicators provide information to the operator on axial power distribution. The calibrated current signals are also used in the Reactor Trip System (RTS) for reduction of the delta T reactor trips if adverse axial power distribution exists.

The total power signal is used for the nuclear overpower reactor trip. A comparator and deviation alarm alerts the operator to channel deviations. In MODES 1 and 2, errors caused by power distribution variations would affect all channels by the same amount. Therefore, this alarm indicates an abnormality, either a power tilt or a channel failure, and alerts the operator to check for abnormalities in other instrumentation.

The design specification for the power range channels calls for ±1% reproducibility. Somewhat better reproducibility is expected for day-to-day operation. Including readout error and normal symmetric variations, the calibrated signals from symmetric locations are expected to follow one another to within 2%.

7.7.2.6.4.5 Thermocouples

Thirty-nine chromel-alumel thermocouples are threaded into guide tubes that penetrate the reactor vessel head through seal assemblies (36 terminate at the exit flow end of the fuel assemblies and three are located in the upper head). The thermocouples are enclosed in stainless steel sheaths within the above tubes to allow replacement if necessary.

Thermocouple readings are indicated in the control room on scanning digital display units, and selected core exit thermocouples may be removed from scan if they are inoperable or malfunctioning. If removed from scan, the thermocouple readings are not displayed on the local digital display units or on the plant process computer system (PPCS). The location of the thermocouples is shown in Figure 7.7-8.

Thermocouple data is continually archived by the plant process computer system (PPCS).

Based on operational experience with similar thermocouple systems, the thermocouple reproducibility is expected to be within ±1/2°F. Including allowance for flow mixing and normal variations in temperature profiles, the normal variation between symmetric thermocouples is expected to be within 3°F.

7.7.2.6.4.6 In-Core Movable Detectors

The movable detector flux monitoring system is described in Section 7.7.4. These miniature neutron flux detectors are remotely positioned in the core and provide remote readout for flux mapping. Retractable thimbles are provided into which the miniature detectors are driven. The 36 thimble locations are shown in Figure 7.7-8.

Four movable detectors are provided, with separate drives and readouts. This allows four locations to be monitored simultaneously. The four detectors are cross-calibrated to give the same readout in the same thimble. This cross-calibration is done during each flux map.

The control room contains the necessary equipment for control, position indication, and flux recording. Panels are provided to indicate the core position of the detectors and for recording the flux level versus the detector position. A "flux-mapping" consists, briefly, of selecting (by panel switches) flux thimbles in given fuel assemblies at various core quadrant locations. The detectors are driven or inserted to the top of the core and stopped automatically. A plot of position versus flux level is initiated with the slow withdrawal of the detectors through the core from the top to a point below the bottom. In a similar manner other core locations are selected and plotted.

Each detector provides axial flux distribution data along the center of a fuel assembly. Various radial positions of detectors are then compared to obtain a flux map for a region of the core.

Experience has shown that flux traces in symmetric locations are virtually identical in MODES 1 and 2 and deviate markedly when a control rod is withdrawn or inserted near one location.

7.7.2.6.4.7 Summary

Routine operator surveillance of the rod position indicators and nuclear instrumentation system, supplemented by operational alarms on rod position deviation and nuclear power range channel deviation, provide redundant checks of control rod position. These checks are sufficient to ensure, by two independent means, that a malpositioned control rod would be quickly noticed and corrective action taken as required for control rod malfunction.

In the event that this routine monitoring cannot be performed because of instrument malfunction, backup checks can be readily carried out by the shift operators using in-core movable detectors and/or thermocouples. Prescribed limits, based on operating history, can be specified for the allowable deviation between detectors at symmetric locations. Thus, there is no requirement for data analysis and evaluation on the part of the operator.

The expected maximum variations between symmetrically located detectors is summarized in Table 7.7-3 for MODES 1 and 2. Similar values for complete misalignment between a control rod and its bank are listed for comparison.

7.7.2.6.5 Expected Instrument Response to Control Rod Misalignment Ginna Station

The placement of in-core and ex-core instrumentation relative to the control rod placement is shown in Figure 7.7-8. For all control rod clusters, at least one core outlet thermocouple and one movable detector channel are located in adjacent fuel assemblies.

Instrument response to misaligned control rods were determined during the plant initial startup tests. As shown by operating plant data, asymmetric variations in thermocouple temperatures of only a few degrees can be used as a reliable indication of abnormal radial power tilts.

7.7.2.6.6 Plant Startup Tests

Extensive core physics tests were conducted as part of the plant initial startup tests to determine the effects of misaligned rods (see Section 14.6.1). These included rod insertion tests, in which each rod or its symmetric equivalent was fully inserted with other rods essentially fully withdrawn. Rod withdrawal tests were also made for selected rods in which the rod was fully withdrawn while its bank was deeply inserted. This included all rods in control banks C and D.

Test measurements included rod worths and hot-channel factors based on in-core and thermocouple maps, and the response of out-of-core nuclear instrumentation. The hot-channel factor measurements were to verify that core limits would not be exceeded in steady-state operation as an immediate result of any malpositioned rod. The measured response of core thermocouples and nuclear instrumentation was recorded and attached to the operating instructions as a guide for checking rod alignment if a rod position indicator was out of service.

7.7.3 NUCLEAR INSTRUMENTATION SYSTEM

7.7.3.1 Design Basis

The following design criterion was used during the licensing of Ginna Station. It was included in the Atomic Industrial Forum (AIF) version of proposed criteria issued by the

AEC for comment on July 10, 1967 (see Section 3.1.1). Conformance with 1972 General Design Criteria of 10 CFR 50, Appendix A, is discussed in Section 3.1.2. The criteria discussed in Section 3.1.2 as they apply to the nuclear instrumentation system includes GDC 13 and GDC 19. Conformance to IEEE 279-1971 Standard is discussed in Section 7.1.2.2.

CRITERION: Means shall be provided for monitoring or otherwise measuring and maintaining control over the fission process throughout core life under all conditions that can reasonably be anticipated to cause variations in reactivity of the core (AIF-GDC 13).

The nuclear instrumentation system is provided to monitor the reactor power from source range through the intermediate range and power range up to 120% full power. The system provides indication, control, and alarm signals for reactor operation and protection.

The operational status of the reactor is monitored from the control room. When the reactor is sub-critical and during approach to criticality (i.e., during MODE 6, "Refueling" through MODE 3 "Hot Shutdown", and during MODE 2 "Startup"), the relative reactivity status (neutron source multiplication) is continuously monitored by two source range proportional counter detectors located in instrument wells within the primary shield and adjacent to the reactor vessel. Two source range detector channels are provided to supply neutron source multiplication information during the above mentioned plant modes. A reactor trip is actuated from either channel if the neutron flux level becomes excessive.

The source range channels are checked prior to operations in which criticality may be approached. A source of neutrons is necessary to provide at least the minimum count rate (> 5 cps) required for startup operations. The discrete (Sb-Be) secondary sources initially installed were removed from the core during the EOC 20 refueling outage. The neutron emissions which occur naturally in burnt fuel are now utilized as the neutron source. These neutron emissions are produced primarily by spontaneous fission of Cm-242 and Cm-244.

Any appreciable increase in the neutron source multiplication, including that caused by the maximum physical boron dilution rate, is slow enough to give ample time to start corrective action (boron dilution stop and/or emergency boron injection) to prevent the core from becoming critical.

When the reactor is critical, means for showing the relative reactivity status of the reactor is provided by control bank positions displayed in the control room. The position of the control banks is directly related to the reactivity status of the reactor when at power and any unexpected change in the position of the control banks under automatic control or change in the coolant temperature under manual control provides a direct and immediate indication of a change in the reactivity status of the reactor. Periodic samples of the coolant boron concentration are taken. The variation in concentration during core life provides a further check on the reactivity status of the reactor including core depletion.

High-nuclear-flux protection is provided both in the power and intermediate ranges by reactor trips actuated from either range if the neutron flux level exceeds trip setpoints. When the reactor is critical, the best indications of the reactivity status in the core (in relation to the

power level and average coolant temperature) is the control room display of the rod control group position.

7.7.3.2 System Design

The nuclear instrumentation system provides the detectors and electronic circuitry necessary to monitor flux levels from outside the reactor vessel. Indication is provided over the range of 10^{-1} to 10^{11} n/cm^2-sec. The lowest range (source range) covers six decades of neutron flux. The next range (intermediate range) covers eight decades of flux and overlaps both the source range and power range. The highest level of indication (power range) covers approximately three decades of neutron flux. The three instrumentation ranges are provided with overlap between adjacent ranges so that continuous readings will be available during transition from one range to another, as indicated in Figure 7.7-10.

Triaxial cable is used for all interconnections from the detector assemblies to the instrumentation in the control room. The electronic equipment for each of the source, intermediate, and power range channels is contained in a drawout panel mounted adjacent to the main control board. The detector assemblies are located in instrument wells around the reactor as shown in the (plan view) lower right hand corner of Figure 7.7-6.

The neutron detectors are positioned in detector assembly containers by means of a linear, high-density moderator insulator. The detector and insulator units are packaged in a housing that is inserted into the guide thimbles.

The detector assembly is electrically isolated from the guide thimble by means of insulated standoff rings.

7.7.3.2.1 Source Range Description

The source range is composed of two independent channels, N-31 and N-32. The neutron detectors are proportional counters that are filled with boron trifluoride (BF_3) gas.

Neutron flux, as measured in the primary shield area, produces current pulses in the detectors. These preamplified pulses are applied to transistor amplifiers and discriminators located in the control room. The preamplifiers are located outside the reactor containment.

The channels indicate the source range neutron flux and provide high flux level reactor trip and alarm signals to the reactor control and protection system. The reactor trip signal is manually blocked when a permissive signal from the intermediate range is available. They are also used at shutdown to provide an audible alarm in the control room of any inadvertent increase in reactivity. An audible count rate signal is used during initial phases of startup and is audible in both the reactor containment and control room. The range of the source range channels is 10^0 to 10^6 cps.

The pulse integrator derives an analog signal, proportional to the logarithm of the number of pulses per unit time, as received from the output of the preamplifier. This unit amplifies the neutron pulse, provides gamma and noise discrimination, shapes the output pulse, performs

log integration of the pulse rate to determine the count rate, and amplifies the log integrator output for indication, recording, control, and automatic data logging.

Each source range contains two bistable trip units. Both units trip on high flux level but one is used during shutdown to alarm reactivity changes and the other provides overpower protection during shutdown and startup. The shutdown alarm unit is blocked manually approximately two decades above shutdown. When the input to either unit is below its setpoint, the bistable is in its normal position and assumes a FULLY ON status. When an input from the log amplifier reaches or exceeds the setpoint, the unit reverses its condition and goes FULLY OFF. The output of the reactor trip unit controls a relay in the Reactor Trip System (RTS).

Power supplies furnish the positive and negative voltages for the transistor circuits and alarm lights and the adjustable high voltage for the neutron detector.

A test calibration unit can insert selected test or calibration signals into the preamplifier channel input or the log amplifier input. A set of precalibrated level signals is provided to perform channel tests and calibrations. An alarm is registered on the main control board annunciator whenever a channel is being tested or calibrated. A trip bypass switch is also provided to prevent a reactor trip during channel test under certain reactor conditions.

The neutron detector high-voltage cutoff assembly receives a trip signal when a one-of-two matrix controlled by intermediate range channel flux level bistables and manual block condition are present and disconnects the voltage from the source range channel high voltage power supply to prevent operation of the BF_3 counter outside its design range. High voltage and reactor trip circuits are reactivated automatically when two of the intermediate range signals are below the permissive trip setting.

Mounted on the front panel of the source range channel is a neutron flux level indicator (1 to 10^6 cps). Mounted on the control board is a neutron count rate level indicator (1 to 10^6 cps). Isolated neutron flux signals are available for recording by the nuclear instrumentation system recorder, by the data logger, and for startup rate computation. The startup rate for each channel is indicated at the main control board in terms of decades per minute over the range of -0.5 to 5.0 decades/min. The isolation network for these signals prevents any electrical malfunction in the external circuitry from affecting the signal being supplied to the flux level bistables. The signals for channel test, high neutron flux at shutdown, and source range reactor trip are alarmed on the main control board annunciator. In addition, there are annunciators for the following source range conditions: manual block of high-flux level at shutdown, loss of high voltage, and individual nuclear instrumentation system trip bypass.

7.7.3.2.2 Intermediate Range Description

The intermediate range is composed of two independent channels. The lowest level of intermediate range indication corresponds to ~10^3 cps on the source range and the highest level corresponds to full power operation. The intermediate range channels measure neutron flux in the range of 10^{-11} to 10^{-3} amp. The intermediate range has control and protective functions.

The intermediate range neutron detectors are compensated ionization chambers that sense thermal neutrons in the range from 2.5×10^2 to 5×10^{10} neutrons/cm^2-sec and have a nominal sensitivity of 7.6×10^{-14} amp per neutron/cm^2-sec. They produce a corresponding direct current of 10^{-11} to 10^{-3} amp. These detectors are located in the same detector assemblies as the proportional counters for the source range channels.

Direct current from the ion chambers is transmitted through triaxial cables to transistor logarithmic current amplifiers in the nuclear instrumentation equipment.

The logarithmic amplifier derives a signal proportional to the logarithm of the current as received from the output of the compensated ion chamber. The output of the logarithmic amplifier provides an input to the level bistables for reactor protection purposes and source range cutoff. The bistable trip units are similar to those in the source range. The trip outputs can be manually blocked after receiving a permissive signal from the power range channels. On decreasing power, the intermediate range trips for reactor protection are automatically inserted when the power range permissive signal is not present.

Low voltage power supplies contained in each drawer furnish the necessary positive and negative voltages for the channel electronic equipment. Two medium voltage power supplies, one in each channel, furnish compensating voltage to the two compensated ion chambers. The high voltage for the compensated ion chambers is supplied by separate power supplies also located in the intermediate range drawers.

On the front panel of the intermediate range channel cabinet and on the control board are mounted a neutron (log N) flux level indicator (10^{-11} to 10^{-3} amp).

Isolated neutron flux level signals are available for recording, automatic data logging, and startup rate computation. The startup rate for each channel is indicated at the main control board in terms of decades per minute over the range -0.5 to 5.0 decades/min.

Channel test, block rod withdrawal, and reactor trip signals are alarms on the main control board annunciator. The latter signal is sent to the Reactor Trip System (RTS).

7.7.3.2.3 Power Range Description

The power range portion of the nuclear instrumentation system consists of four channels. The power range instrumentation covers approximately three decades and overlaps the intermediate range. The power range utilizes linear instead of log indicators. Each channel and individual detector is continually compared with the others to alert the operator to a possible flux imbalance.

Four detector assemblies are used in the power range. They are long ionization chambers approximately equal to the core height, in which the inner electrodes are divided into two equal sections to supply in effect a total of eight separate ionization chambers approximately one-half the core height. The eight uncompensated (guard-ring) ionization chambers sense thermal neutrons in the range from 5×10^2 to 1×10^{11} neutrons/cm^2-sec.

Each has a nominal sensitivity of 3.1 x 10^{-13} amp per neutron/cm^2-sec. The four long ionization chamber assemblies are located in vertical instrument wells adjacent to the four "corners" of the core. The assembly is manually positioned in the assembly holders and is electrically isolated from the holder by means of insulated standoff rings.

There are three sets of power range measurements. Each set utilizes four individual currents as follows:

A. Four currents directly from the lower sections of the long ionization chambers.

B. Four currents directly from the upper sections.

C. Four total currents of A. and B. above, equivalent to the average of each section.

For each of the four currents in A. and B., the current measurement is indicated directly by a microammeter and isolated signals are available for data logging and control console indication and recording. Analog signals proportional to individual currents are transmitted through buffer amplifiers to the overtemperature and overpower delta T channels and provide automatic reset of the trip point for these protection functions. The total current, equivalent to the average, is then applied through a linear amplifier to the bistable trip circuits. The amplifiers are equipped with gain and bias controls for adjustment to the actual output corresponding to 100% rated reactor power.

Each of the four amplifiers also provides amplified isolated signals to the main control board for indication and for use in the reactor control system. Each set of bistable trip outputs is operated as a two-out-of-four coincidence to initiate a reactor trip. Bistable trip outputs are provided at low and high power setpoints depending on the operating power. To provide more protection during startup operation, the low power setpoint is used. The trip is manually blocked after a permissive condition is obtained by two-of-four power range channels. The high power trip bistable is always active.

The four amplifier signals corresponding to C. above are supplied to circuits that compare a referenced channel output with the corresponding signal from the other channels. Alarms are provided to present deviations that might be indicative of quadrant flux asymmetries.

The overpower trip will be set so that, for operating limit reactor conditions concurrent with the maximum instrumentation and bistable setpoint error, the maximum reactor overpower condition will be limited to 115%. This limit is accomplished by the use of solid-state instrumentation and long ionization chambers that permit an integration of flux external to the core over the total length of the core, thereby reducing the influence of axial flux distribution changes due to control rod motion.

The ion chamber current of each detector is measured by sensitive meters with an accuracy of 0.5%. A shunt assembly and switch in parallel with each meter allows selection of one of four meter ranges. The available ranges are 0.1, 0.5, 1, and 5 mA. The shunt assemblies are designed in such a manner that they will not disconnect the detector current to the summing assembly upon meter failure or during switching. An isolation amplifier provides an analog signal proportional to ion chamber current for data logging and delta flux indication. A test

calibration unit provides necessary switches and signals for checking and calibrating the power range channels.

7.7.3.2.4 Dropped Rod Protection

As backup to the primary protection for the dropped control rod accident, the rod bottom signal, an independent detection means is provided using the out-of-core power range nuclear channels that is effective even if one of the channels is out of service. The dropped-rod sensing unit contains a difference amplifier that compares the instantaneous nuclear power signal with an adjustable power lag signal and responds with a trip signal to the bistable amplifier when the difference exceeds a preset adjustable amount. The signal initiates protective action in the form of blocking of rod withdrawal.

7.7.3.2.5 Audio Count Rate Channel

The audio count rate channel provides audible source range information during MODE 6 (Refueling) operations in both the control room and the reactor containment. In addition, this channel signal is fed to a scaler-timer assembly that produces a visual display of the count rate for an adjustable sampling period.

7.7.3.2.6 Recorders

One large 2-pen strip chart recorder is mounted on the main control board for recording the complete range of the source, intermediate, and power channels. A switch is provided for each pen that enables the selection of any one channel. The recorder records any two channels as linear signals. Variable chart speeds are provided.

Switching of inputs to the recorder does not cause any spurious signals that would initiate false alarms or reactor trips.

7.7.3.2.7 Power Supply

The nuclear instrumentation system is powered by four independent vital bus circuits (see Section 8.3).

7.7.3.2.8 Equipment Locations

The plant location of the detectors are shown in the (plan view) lower right-hand corner of Figure 7.7-6. The view also indicates the position of the detectors relative to the core center plane.

7.7.3.3 System Evaluation

The sensitivity of the reactor neutron detectors is illustrated in Figure 7.7-10.

The nuclear instrumentation draws its primary power from battery-backed vital instrument buses whose reliability is discussed in Section 8.3.

Loss of nuclear instrumentation power would result in the initiation of all reactor trips that were operational prior to the power loss. In addition, all trips that were blocked prior to loss

would be unblocked and initiated also. Single bus failures do not result in reactor trips since only one channel is powered from each bus.

The requirements established for the Reactor Trip System (RTS) apply to the nuclear instrumentation. All channel functions are independent of every other channel.

7.7.4 IN-CORE INSTRUMENTATION

7.7.4.1 Design Basis

The in-core instrumentation is designed to yield information on the neutron flux distribution and fuel assembly outlet temperatures at selected core locations. Using the information obtained from the in-core instrumentation system, it is possible to confirm the reactor core design parameters and calculated hot-channel factors. The system provides means for acquiring data and performs no operational plant control.

7.7.4.2 System Design

7.7.4.2.1 General

The in-core instrumentation system consists of thermocouples, positioned to measure fuel assembly coolant outlet temperature at preselected locations, and flux thimbles that run the length of selected fuel assemblies to measure the neutron flux distribution within the reactor core.

The experimental data obtained from the in-core temperature and flux distribution instrumentation system, in conjunction with previously determined analytical information, can be used to determined the fission power distribution in the core at any time throughout core life. This method is more accurate than using calculational techniques alone. Once the fission power distribution has been established, the maximum power output is primarily determined by thermal power distribution and the thermal and hydraulic limitations determine the maximum core capability.

The in-core instrumentation provides information that may be used to calculate the coolant enthalpy distribution, the fuel burnup distribution, and an estimate of the coolant flow distribution.

Both radial and azimuthal symmetry of power may be evaluated by combining the detector and thermocouple information from the one quadrant with similar data obtained from the other three quadrants.

7.7.4.2.2 Thermocouples

Chromel-alumel thermocouples are threaded into guide tubes that penetrate the reactor vessel head through seal assemblies (36 terminate at the exit flow end of the fuel assemblies and three are located in the upper head). A simplified sketch of a typical thermocouple is shown in Figure 7.7-12 (Sheet 2). The thermocouples are enclosed in stainless-steel sheaths within the above tubes to allow replacement if necessary. Thermocouples are split into two trains outside of containment and run to separate digital scanning displays in the control room. The displays provide isolated outputs to the plant process computer system (PPCS) as required for

MODES 1, 2, and 3. The displays, cable, containment penetrations, and connectors at the reactor head are seismically and environmentally qualified. Operating range of the thermocouple system, including displays, is 0-2300°F. The support of the thermocouple grid tubes in the upper core support assembly is described in Section 3.9.5.1.3.

7.7.4.2.3 Movable Miniature Neutron Flux Detectors

Four fission chamber detectors (employing U_3O_8 which is approximately 90 to 93% enriched in Uranium-235) can be remotely positioned in retractable guide thimbles to provide flux mapping of the core. Maximum chamber dimensions are 0.188 in. in diameter and 2.10 in. in length. The stainless-steel detector shell is welded to the leading end of the helical-wrap drive cable and the stainless steel sheathed coaxial cable. Each detector is designed to have a minimum thermal neutron sensitivity of 1.0×10^{-17} amp/nv and a maximum gamma sensitivity of 3×10^{-14} amp/R-hr. Operating thermal neutron flux range for these probes is 1×10^{11} to 5×10^{13} nv. Other miniature detectors, such as gamma ionization chambers and boron-lined neutron detectors, can also be used in the system. A simplified sketch of a typical basic system for the insertion of these detectors is shown in Figures 7.7-11 and 7.7-13. Retractable thimbles into which the miniature detectors are driven are pushed into the reactor core through conduits that extend from the bottom of the reactor vessel down through the concrete shield area and then up to a thimble seal zone.

The thimbles are closed at the leading ends, are dry inside, and serve as the pressure barrier between the reactor water pressure and the atmosphere.

Mechanical seals between the retractable thimbles and the conduits are provided at the seal table.

During reactor operation, the retractable thimbles are stationary. They are extracted downward from the core during MODE 6 (Refueling) to avoid interference within the core. A space above the seal table is provide'd for the retraction operation.

The drive system for the insertion of the miniature detectors consists basically of four drive assemblies, four path group selector assemblies, and four rotary selector assemblies, with a typical simplified sketch of the arrangement shown in Figure 7.7-13. The drive system pushes hollow helical-wrap drive cables into the core with the miniature detectors attached to the leading ends of the cables and small diameter sheathed coaxial cables threaded through the hollow centers back to the trailing ends of the drive cables. Each drive assembly generally consists of a gear motor that pushes a helical-wrap drive cable and detector through a selective thimble path by means of a special drive box and includes a storage device that accommodates that total drive cable length. Further information on mechanical design and support is described in Section 3.9.5.1.3.

7.7.4.2.4 Control and Readout System

The control and readout system provides the means for inserting the miniature neutron detectors into the reactor core and withdrawing the detectors at a selected speed while plotting a level of induced flux level versus detector position. The control system consists of two sections, one physically mounted with the drive units, and the other contained in the control

room. Limit switches in each drive conduit provide the means for prerecording detector and cable positioning in preparation for a flux mapping operation. Each drive wheel shaft drives an encoder for positional data plotting. One group path selector is provided for each drive unit to route the detector into one of the flux thimble groups. A rotary transfer assembly is a transfer device that is used to route a detector into any one of up to 10 selectable paths. A total of 36 manually operated isolation valves allows free passage of the detector and drive wire when open and prevents steam leakage from the core in case of a thimble rupture when closed. A path common to each group of flux thimbles is provided to permit cross calibration of the detectors.

The control room contains the necessary equipment for control, position indication, and flux recording. Panels are provided to indicate the core position of the detectors and for plotting the flux level versus the detector position. Additional panels are provided for such features as drive motor controls, core path selector switches, plotting, and gain controls. A flux map consists, briefly, of selecting (by panel switches) flux thimbles in given fuel assemblies at various core quadrant locations. The detectors are driven or inserted to the top of the core and stopped automatically. An x-y plot (position versus flux level) is initiated with the slow withdrawal of the detectors through the core from the top to a point below the bottom. In a similar manner other core locations are selected and plotted.

Each detector provides axial flux distribution data along the center portion of a fuel assembly. This data is then processed to obtain a core flux map.

7.7.5 REACTOR COOLANT TEMPERATURE INDICATION

The reactor coolant system temperature provides indication of the system heat content, power, and core reactivity balance. Temperature is measured by resistance temperature detectors and is used to control the Atmsopheric Relief Valves (ARV), control rods, and pressurizer level. The T_{AVG} and delta T signals generated by the temperature instruments are used by the Reactor Trip System (RTS) to generate reactor trips. Alarms are generated to alert the operator to possible problem conditions.

There are 11 resistance temperature detector locations utilized in each reactor coolant system loop. Four (T_{cold}) are direct immersion 510°F to 590°F detectors; Four (T_{hot}) are direct immersion 540°F to 650°F detectors; The T_{cold} and T_{hot} detectors provide input to the narrow range (540°F to 620°F) T_{avg} temperature channels and 0-85°F ΔT temperature channels. Two are direct immersion, wide-range (0°F to0 700°F), dual-element detectors; and one is a wide-range (50°F to 650°F) detector installed in a thermowell.

The narrow-range temperature indication system for the reactor coolant system loops provides high accuracy, fast responding indication of loop average temperature (T_{AVG}) and hot-leg minus cold-leg temperature difference (delta T) necessary for various reactor control and protection functions.

The narrow-range temperature is measured by four resistance temperature detectors in each loop hot leg and four resistance temperature detectors in each loop cold leg (16 total). The need for faster responding temperature signals dictated the need for direct immersion or wet-

bulb type resistance temperature detectors. An immersion type resistance temperature detector results in a higher probability for coolant system leaks and the system must be depressurized and drained to allow replacement.

Plant average T_{AVG} is computed from the average of the four T_{AVG} channel values, displayed on a recorder, and used to generate alarms. Plant average T_{AVG} also sends a control signal to the automatic rod control system, pressurizer level program, steam dump control system, rod insertion limit computer, and the Main Feedwater Regulating Valves (MFRV).

Plant average delta T is computed from the average of the four delta T channel values, and provides a deviation alarm and an input to the rod insertion limit computer.

Wide-range reactor coolant system temperature is measured by one direct immersion, dual-element detector (0°F to 700°F) in each hot leg and cold leg and by one thermowell mounted detector (50°F to 650°F) in each cold leg (six total). The wide-range reactor coolant loop temperature measurement system provides hot leg and cold leg temperature signals, which are input to redundant hot and cold leg temperature displays, the subcooling monitor, the zirconium guide tube interlock reactor trip, the Low Temperature Overpressure Protection (LTOP) System, and the reactor vessel level indication system.

The wide-range temperature indication range (0°F to 700°F) is adequate to monitor transients and heatup and cooldown operations. The temperature is displayed on a 3-pen recorder located on the main control board left section, on indicators in the main control board and the intermediate building emergency local instrument panel, and on the plant process computer system.

7.7.6 PLANT PROCESS COMPUTER SYSTEM AND SAFETY ASSESSMENT SYSTEM

7.7.6.1 General

The plant process computer system (PPCS)/safety parameter display system (SPDS) is an integrated data acquisition and display system. The PPCS has hardcopy output devices. The PPCS/SPDS satisfies the performance requirements of NUREG 0696, as modified by NUREG 0737.

The PPCS/SPDS computer system is not designed to perform any control functions. The system is capable of operation during all plant conditions except a seismic event. During a seismic event, the main control board will provide critical parameter display in the event of loss of nonseismic equipment. MUX cabinets 1-4 are powered from the technical support center uninterruptible power supply. Breakers and fuses are provided to protect the multiplexers (MUX) in the event of electrical faults.

In 2001, the plant process computer system (PPCS) and safety assessment system (SAS) were replaced with an integrated advanced technology system (*Reference 11*). The SAS, now referred to as the safety parameter display system (SPDS), is part of the plant process computer system (PPCS). Redundancy is maintained, since there are two independent PPCS systems, and the SPDS processing and display functions can be accessed from any of the several PPCS monitors in the control room. There are two major differences between the former SAS

and the new SPDS. The diagnostic "AIDS" bars were removed. These bars were not required by regulation, and could provide misleading information for some accident scenarios. Also, the continuous monitoring function of the SPDS is accomplished by an audible and visual alarm on the PPCS monitor. These alarms alert the operator that a parameter on the top-level display of the SPDS has reached a predetermined value. The operator is administratively directed to display the appropriate SPDS screen. In addition, the top-level display automatically displays on the terminal located on the desk of the head control operator when a reactor trip occurs. Manual action by the head control operator is required to remove this display.

There are six multiplexer (MUX) cabinets. When redundant field inputs for a parameter are available, they are assigned to different MUX cabinets. This minimizes the effect of a MUX failure on the parameter.

The three MUX cabinets in the relay room are seismically qualified and use input cards, which provide electrical isolation sufficient to prevent any credible voltage excursion from propagating to the Reactor Trip System (RTS) and Engineered Safety Features Actuation System (ESFAS) circuits from other inputs via the multiplexer. The remaining three MUX cabinets are located in the Turbine and Intermediate (cleanside) Buildings, and Station 13A. These new remote MUX cabinets allow for additional plant parameters to be displayed on the PPCS.

All PPCS/SPDS alarms and displays will be viewable on CRTs in the control room, technical support center, emergency operations facility, and engineering support center.

The systems are capable of displaying and printing the set of Type A, B, C, D, and E variables specified in Regulatory Guide 1.97 when sensor outputs are available for those parameters.

Data storage and recall capability are provided. At least 2 hours of pre-event and 12 hours of post-event data will be recorded for selected parameters. Capacity to record at least 2 weeks of additional post-event data for selected parameters with reduced time resolution are provided. The capability to transfer data between active memory and archival data storage without interrupting data acquisition and displays are provided.

7.7.6.2 Plant Process Computer System

The purpose of the plant process computer system (PPCS) is to provide information to the plant operator to effectively assist in the operation of the nuclear steam supply system and to inform the operator of specific abnormal conditions by comparison with preset or calculated limits. Basic to the design of this computer system is the requirement that the conventional plant instrumentation systems and control room instrumentation and control functions permit operation of the plant with the computer out of service. The computer system reduces the burden to the plant operator in maintaining surveillance over the nuclear steam supply system to ensure that operating conditions are maintained within normal bounds.

The computer and instrumentation are used instead to alert plant operators that in-core parameters are deviating from values shown to be safe by prior analysis.

For the analysis of in-core thermocouple data, the core is divided into regions. Thermocouple readings (converted to enthalpy rise) are compared region-wise to check for possible peaking or asymmetry. The variation of this type of data over time is available to the operator so that trends can be identified at an early stage.

The plant process computer system (PPCS) supports in-core flux mapping by providing a convenient data collection platform. The plant process computer system is used for data acquisition during flux mapping activities. This data is transferred to a separate workstation for subsequent reduction to determine the core power distribution and peaking factors.

Plant process computer system inputs are provided from the reactor coolant system, the secondary system, the effluent monitoring system, and auxiliary service systems throughout the plant. These inputs are stored as discrete, addressable data points that are used to perform specific computations (e.g., compute subcooling margin), generate alarms, indicate digital and analog information, and to provide pre-trip and post-trip data.

7.7.6.3 Safety Parameter Display System

The safety parameter display system (SPDS) is designed to provide an integrated display of critical plant safety parameters and perform reference diagnostics during emergencies. The performance requirements of NUREG 0696, as modified by NUREG 0737, are satisfied by the SPDS. It also fully meets the requirements of NUREG 0737, Supplement 1 (*Reference 10*). See also Section 7.5.2. The SPDS provides the operators in the control room and personnel in the technical support center, the emergency operations facility, and the engineering support center with an indication of the safety status of the plant and postaccident monitoring. In the event of specific abnormal conditions (those for which computer programs were formulated) the computer system is designed to assist the operator by an orderly presentation of symptoms.

The control room reliability of the plant process computer system (PPCS)/safety parameter display system (SPDS) meets the NUREG-0696 specified unavailability goal of 0.01 when the reactor is above MODE 5 (Cold Shutdown) and 0.2 while the reactor is in cold-shutdown status.

Human factors have been considered in all aspects of the SPDS design. Function keyboards are provided that allow for rapid and error-free display requests. Color and pattern coding techniques have been extensively used to portray status in graphic form for rapid and unambiguous recognition. Color-coded bars, targets, and alphanumeric displays are employed to represent off-normal parameter values. The displays were designed to be readable at distances in accordance with the safety significance of particular data. The information on the top level or mode displays is sized to be readable at a distance of up to 15 ft, while alphanumeric text data are readable at a 28-in. viewing distance. The SPDS displays can be accessed from any PPCS terminal.

REFERENCES FOR SECTION 7.7

1. Westinghouse Electric Corporation, Advanced Digital Feedwater Control System, Median Signal Selector for Rochester Gas & Electric, Robert E. Ginna, WCAP 12347, September 1990.

2. Letter from R. C. Mecredy, RG&E, to A. R. Johnson, NRC, Subject: Response to Generic Letter 93-04, dated August 5, 1993.

3. Letter from R. C. Mecredy, RG&E, to A. R. Johnson, NRC, Subject: Transmittal of 90-day Response to Generic Letter 93-04, dated September 20, 1993.

4. Letter from M. Virgilio, NRC, to R. Newton, Westinghouse Owners Group, Subject: Generic Letter 93-04, Demonstration Plant Testing and Closure of Issuance, dated June 20, 1994.

5. Letter from R. A. Newton, Westinghouse Owners Group, to A. C. Thadani, NRC, Subject: Final Transmittal of Documentation Associated with Westinghouse Owners Group Rod Control System Enhancement Program Addressing Generic Letter 93-04, dated July 12, 1994 (OG-94-62).

6. Letter from G.M. Holahan, NRC, to R.A. Newton, Westinghouse Owners Group, Subject: WCAP-13864, "Rod Control System Evaluation," Revision 1 and Related Documents (TAC No. M88305), dated November 10, 1994.

7. Letter from A.R. Johnson, NRC, to R.C. Mecredy, RG&E, Subject: Resolution of Generic Letter 93-04, "Rod Control System Failure and Withdrawal of Rod Cluster Control Assemblies, 10 CFR 50.54 (f)," (TAC No. M86848), dated June 27, 1995.

8. Letter from R. C. Mecredy, RG&E, to A. R. Johnson, NRC, Subject: Generic Letter 89-19, "Safety Implication of Control System in LWR Nuclear Power Plants" (USI A-47), dated October 27, 1993.

9. Letter from A. R. Johnson, NRC, to R. C. Mecredy, RG&E, Subject: Closeout of Generic Letter (GL) 89-19, "Request for Action Related to Resolution of Unresolved Safety Issue A-47, 'Safety Implication of Control Systems in LWR Nuclear Power Plants' Pursuant to 10 CFR 50.54(f)" (TAC No. M74945), dated December 21, 1993.

10. Letter from A. R. Johnson, NRC, to R. C. Mecredy, RG&E, Subject: to NRC Generic Letter 89-06 on the Safety Parameter Display System [Post Accident Monitoring (PAM) Instrumentation] for Rochester Gas and Electric Corporation, dated June 29, 1980.

11. PCR 2000-0005, SAS/PPCS Replacement.

Table 7.7-1
OUT-OF-PHASE CURRENTS (AMPS)

	One Motor-Generator Set in Service	Two Motor-Generator Sets in Service
480-V		
Unlimited capacity	25,000	50,000
400-kVA capacity	12,000	24,000
208-V		
Unlimited capacity	16,000	32,000
400-kVA capacity	8,000	16,000

Table 7.7-2
ROD STOPS

Rod Stop	Actuation Signal	Rod Motion to be Blocked
Rod drop	1/4 rapid power range nuclear flux decrease or any rod bottom signal	Automatic withdrawal
Nuclear overpower	1/4 high power range nuclear flux or 1/2 high intermediate range nuclear flux	Automatic and manual withdrawal
High delta T	2/4 overpower delta T or 2/4 overtemperature delta T	Automatic and manual withdrawal
(Actuation of rod stops [item 3] indicates a turbine load reduction)		
Low power	1/1 low MWe load signal	Automatic withdrawal
T_{AVG} deviation	1/4 T_{AVG} channel deviation from average T_{AVG}	Automatic withdrawal and insertion

Table 7.7-3
EXPECTED MAXIMUM VARIATIONS BETWEEN SYMMETRICALLY LOCATED DETECTORS

Parameter	Expected Normal Symmetric Variation	Expected Symmetric Variation With Rod Misalignment
Power range nuclear instrumentation	±2%	10% to 35%
Core outlet thermocouples	±3°F	15°F to 35°F
In-core movable detectors	±2%	10% to 50%

Figure 7.7-1 Reactor Control System

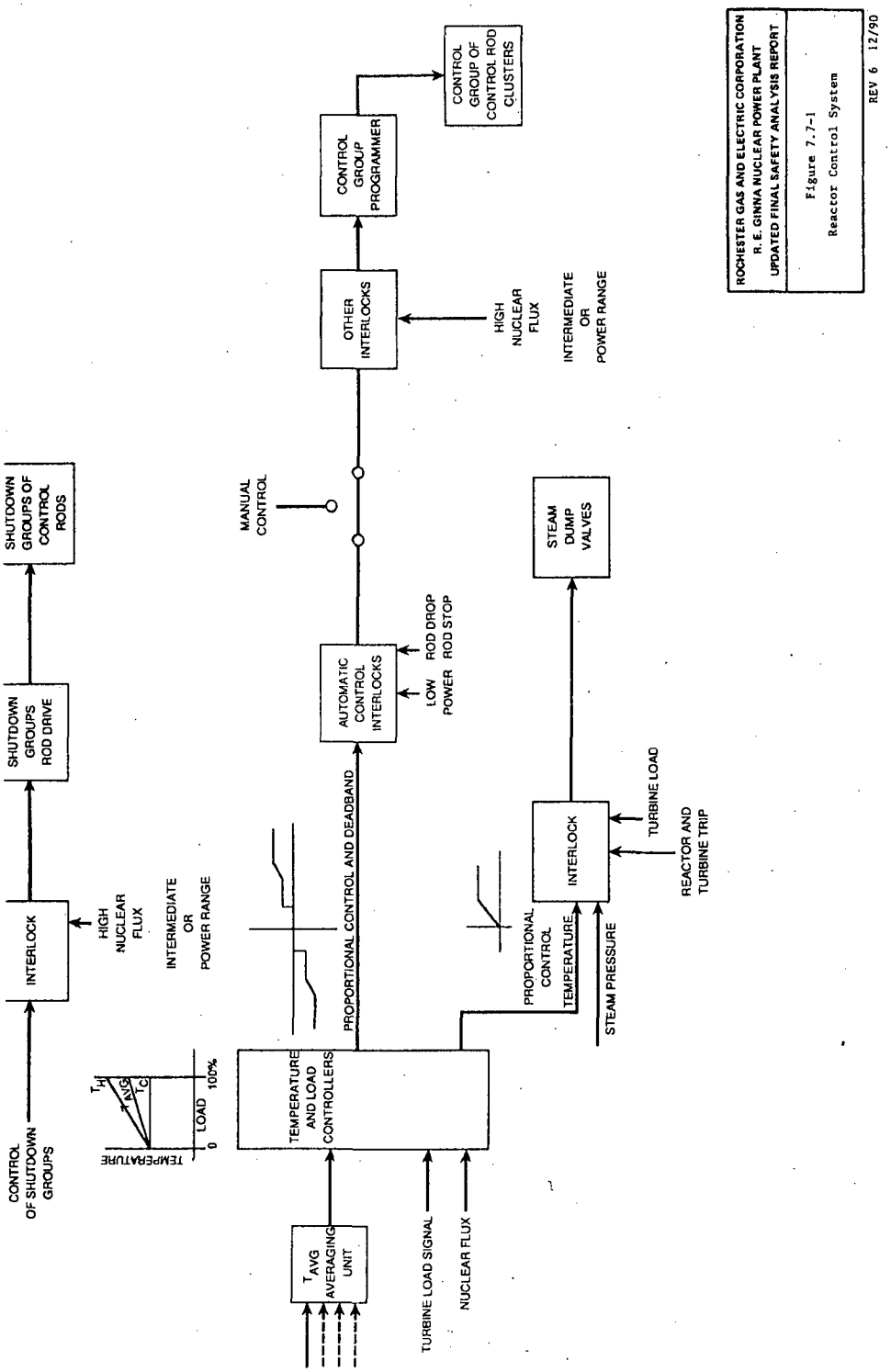

Figure 7.7-2 Simplified Block Diagram of Reactor Control Systems

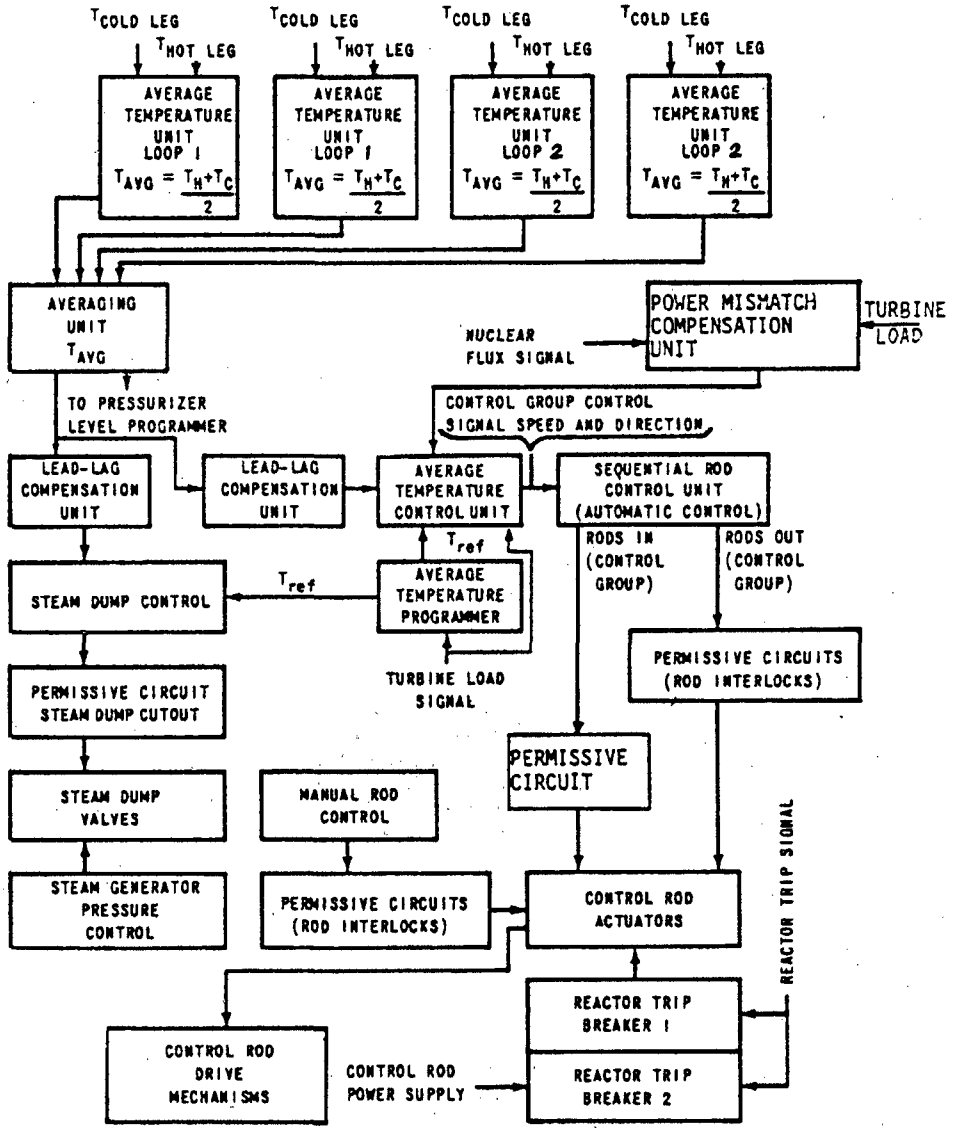

NOTES:

1. TEMPERATURES ARE MEASURED AT STEAM GENERATORS INLET AND OUTLET.
2. PRESSURE IS MEASURED AT THE PRESSURIZER.

ROCHESTER GAS AND ELECTRIC CORPORATION
R.E. GINNA NUCLEAR POWER PLANT
UPDATED FINAL SAFETY ANALYSIS REPORT

Figure 7.7-2

Simplified Block Diagram of Reactor Control Systems

Figure 7.7-3 Control Group - Rod Drive System

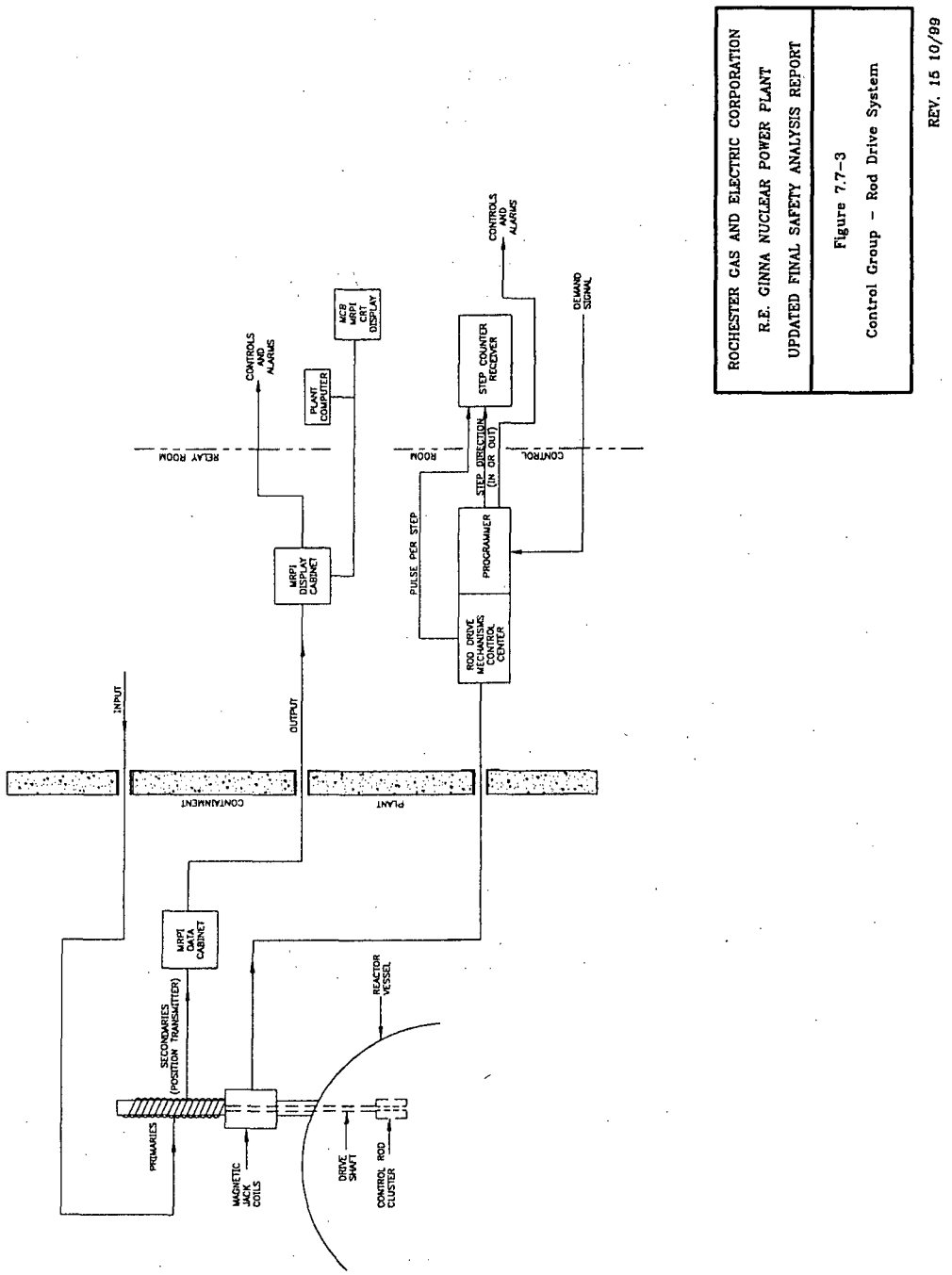

Figure 7.7-4 Power Supply to Rod Control Equipment and Control Rod Drive Mechanisms

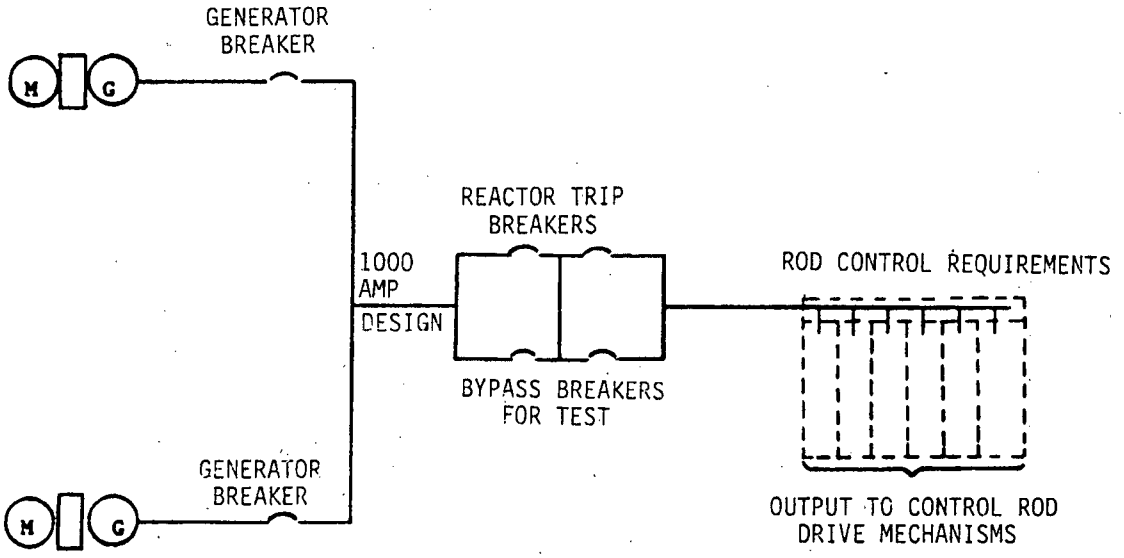

ROCHESTER GAS AND ELECTRIC CORPORATION R.E. GINNA NUCLEAR POWER PLANT UPDATED FINAL SAFETY ANALYSIS REPORT
Figure 7.7-4 Power Supply to Rod Control Equipment and Control Rod Drive Mechanisms

Figure 7.7-4a Illustration of MRPI Indication

GINNA/UFSAR
CHAPTER 7 INSTRUMENTATION AND CONTROLS

Figure 7.7-4a Illustration of MRPI Indication

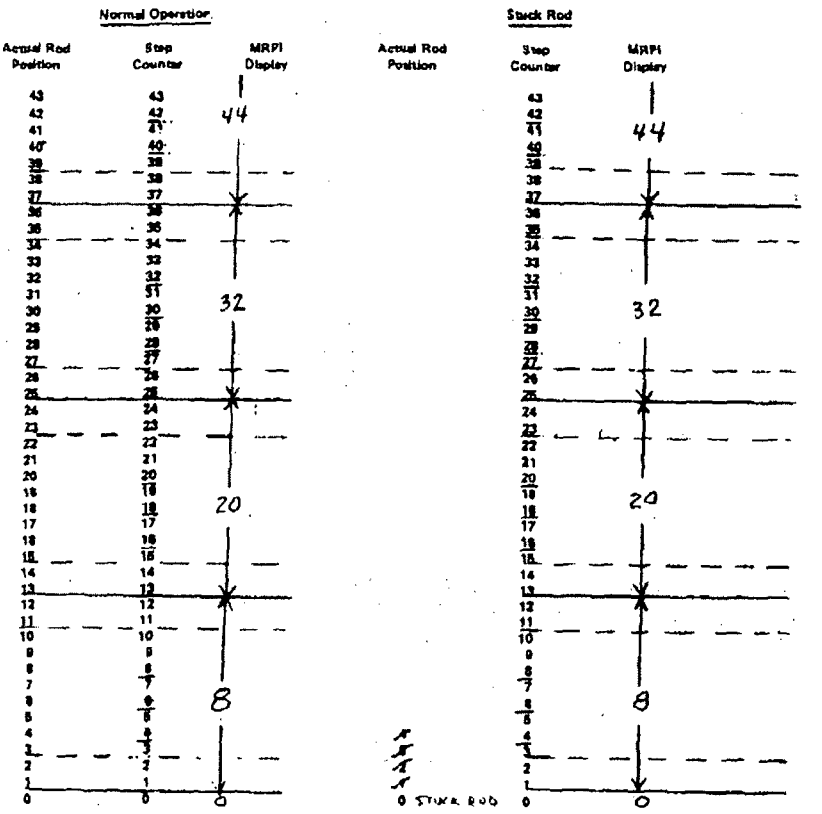

— — — — Indicates transition uncertainty associated with processing and coil sensitivities.

ROCHESTER GAS AND ELECTRIC CORPORATION
R. E. GINNA NUCLEAR POWER PLANT
UPDATED FINAL SAFETY ANALYSIS REPORT

Figure 7.7-4a

Illustration of MRPI Indication

REV 3 12/87

Figure 7.7-5 Figure DELETED

Figure Deleted

Figure 7.7-6 Nuclear Protection System

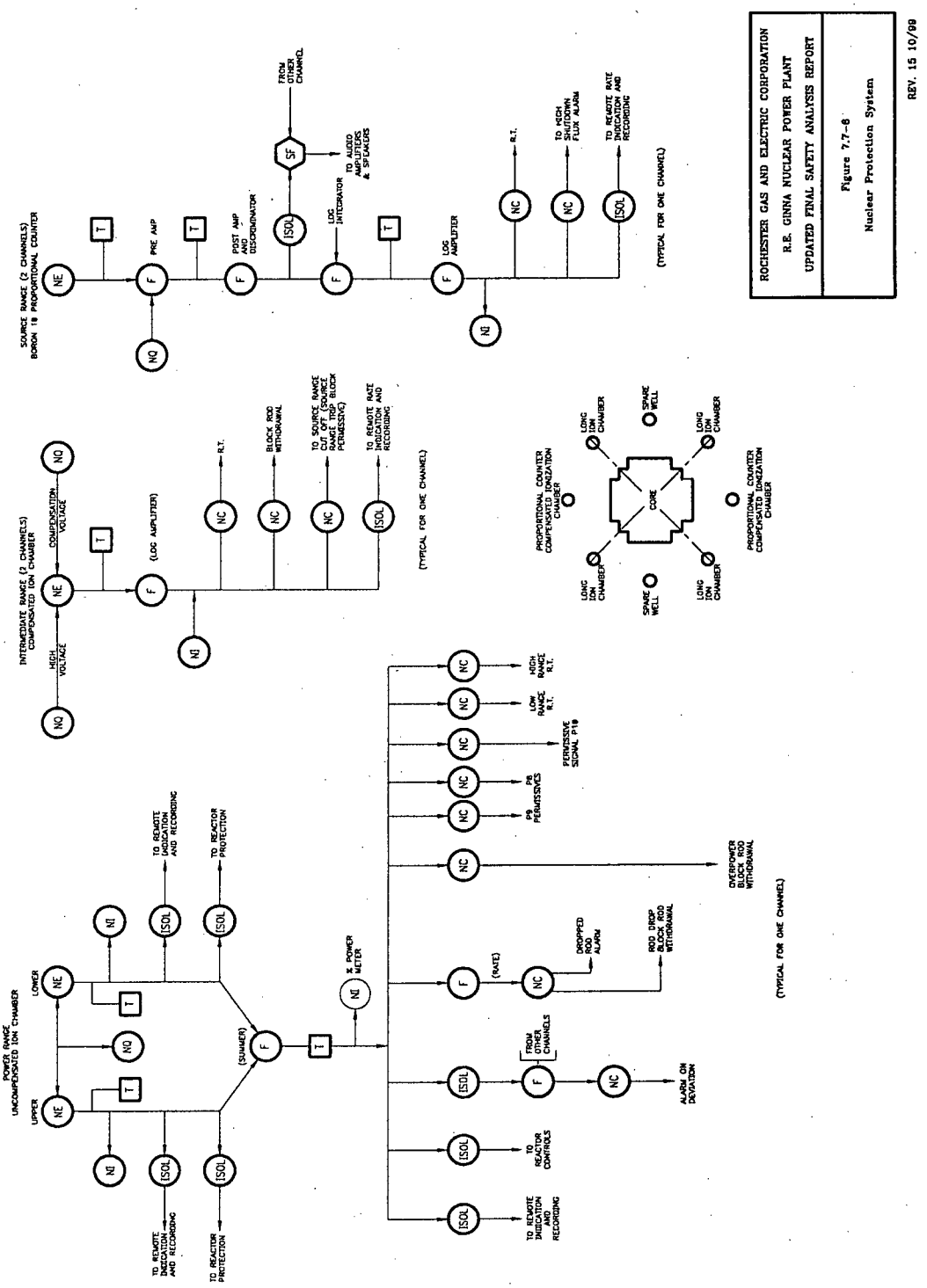

Figure 7.7-7 Power Range Nuclear Detector Locations

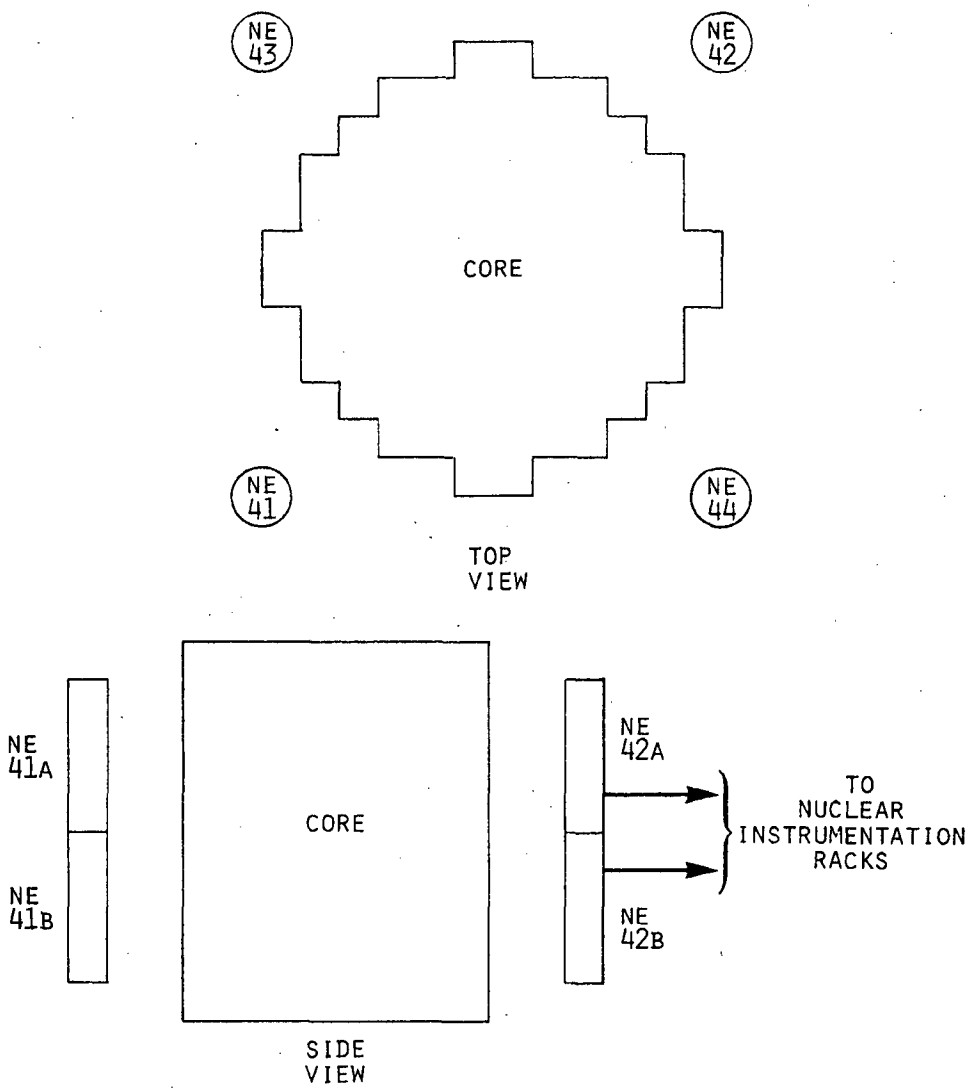

ROCHESTER GAS AND ELECTRIC CORPORATION R.E. GINNA NUCLEAR POWER PLANT UPDATED FINAL SAFETY ANALYSIS REPORT
Figure 7.7-7 Power Range Nuclear Detector Locations

Figure 7.7-8 Location of Control Rods and Instrumentation

GINNA/UFSAR
CHAPTER 7 INSTRUMENTATION AND CONTROLS

Figure 7.7-8 Location of Control Rods and Instrumentation

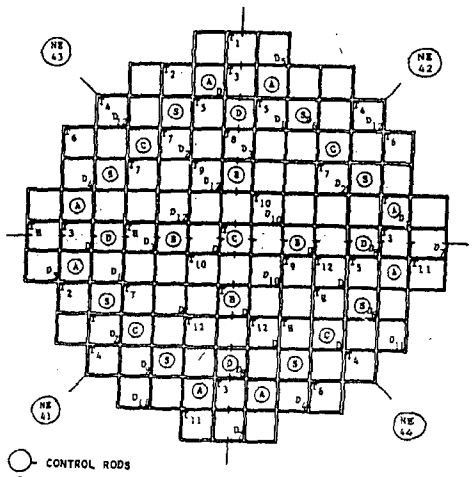

- CONTROL RODS
S - SHUTDOWN BANK
A,B,C,D - CONTROL BANKS
D - MOVABLE DETECTORS (36)
T - THERMOCOUPLES, FUEL ASSEMBLIES (36)
T_H - THERMOCOUPLES, UPPER HEAD (3)
NE - POWER RANGE NUCLEAR DETECTOR

R.E. GINNA NUCLEAR POWER PLANT
UPDATED FINAL SAFETY ANALYSIS REPORT

Figure 7.7-8

Location of Control Rods and Instrumentation

Figure 7.7-9 Power Range Nuclear Instrumentation System

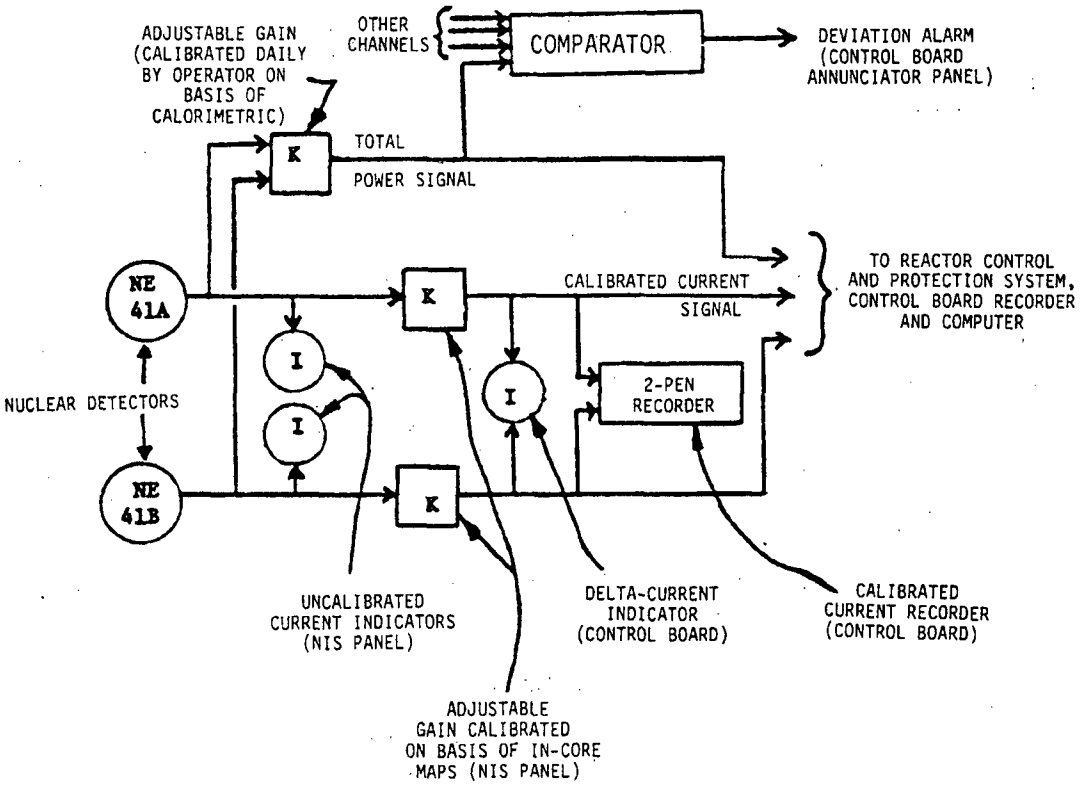

(PARTIAL BLOCK DIAGRAM FOR CHANNEL N-41 SHOWN. OTHER CHANNELS ARE IDENTICAL.)

ROCHESTER GAS AND ELECTRIC CORPORATION R.E. GINNA NUCLEAR POWER PLANT UPDATED FINAL SAFETY ANALYSIS REPORT
Figure 7.7-9 Power Range Nuclear Instrumentation System

Figure 7.7-10 Neutron Detectors and Range of Operation

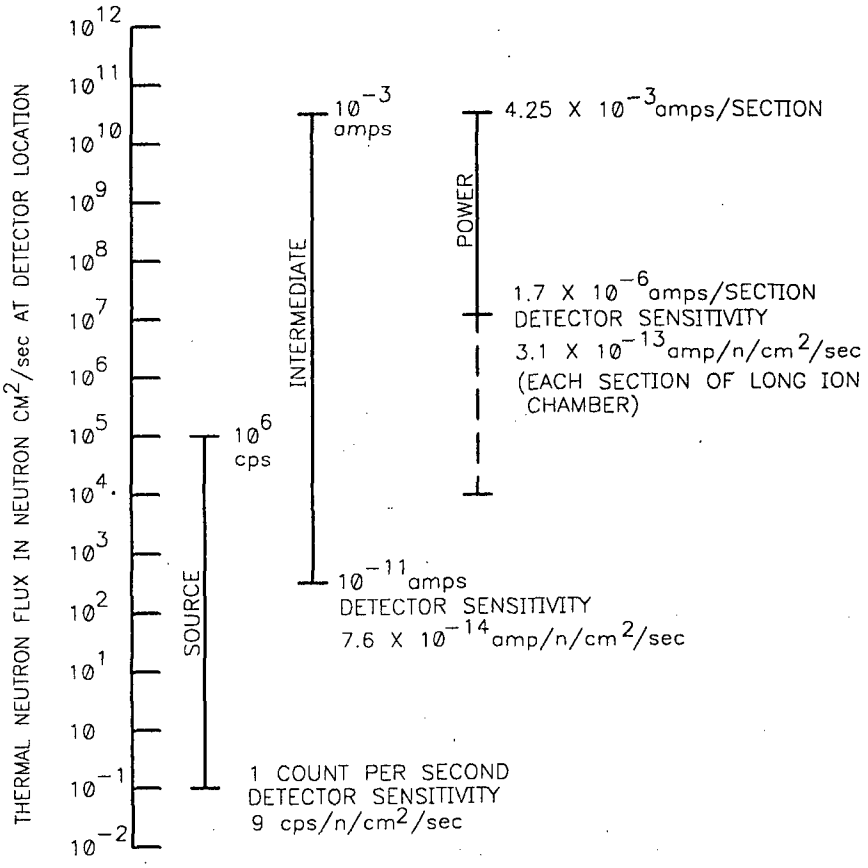

ROCHESTER GAS AND ELECTRIC CORPORATION
R.E. GINNA NUCLEAR POWER PLANT
UPDATED FINAL SAFETY ANALYSIS REPORT

Figure 7.7-10
Neutron Detectors and Range of Operation

REV. 15 10/99

Figure 7.7-11 In-Core Instrumentation - Assembly

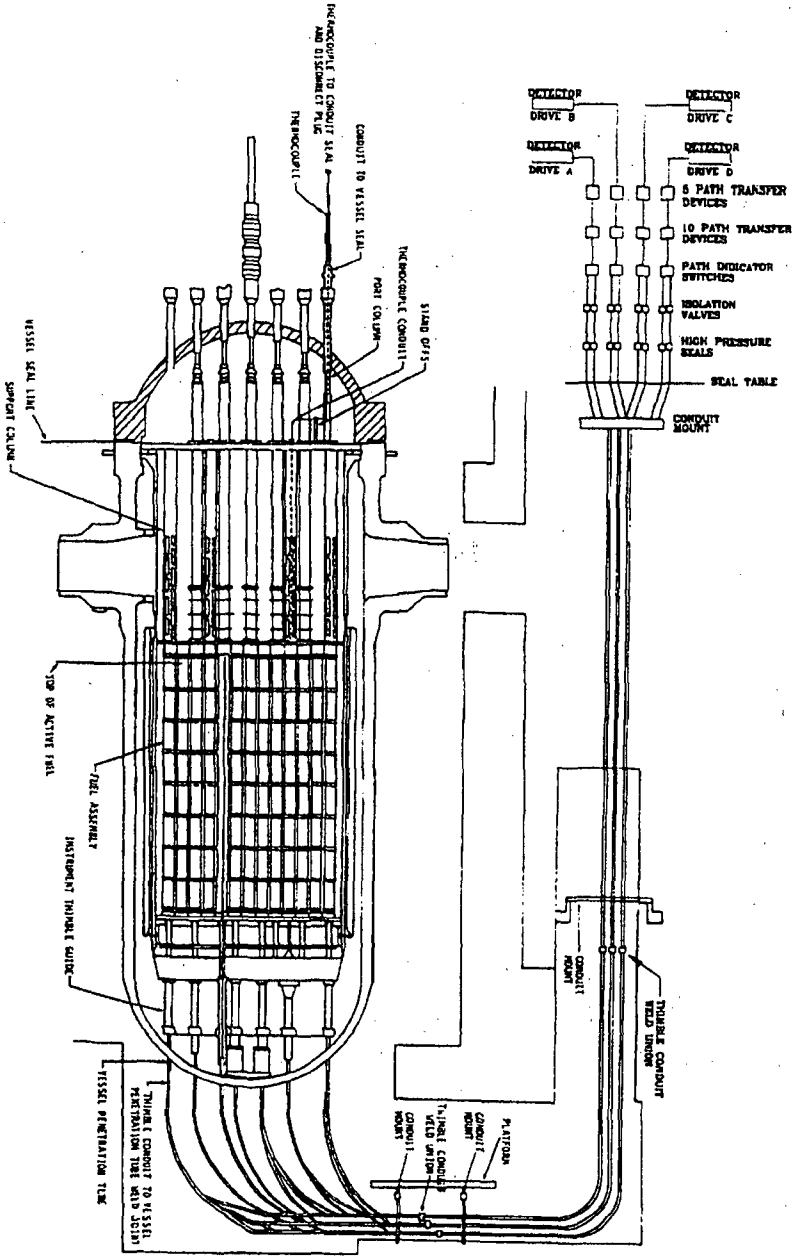

ROCHESTER GAS AND ELECTRIC CORPORATION
R.E. GINNA NUCLEAR POWER PLANT
UPDATED FINAL SAFETY ANALYSIS REPORT

Figure 7.7-11
In-Core Instrumentation - Assembly

Revised 10/15/2003

Figure 7.7-12 Sheet 1 - In-Core Instrumentation, Details

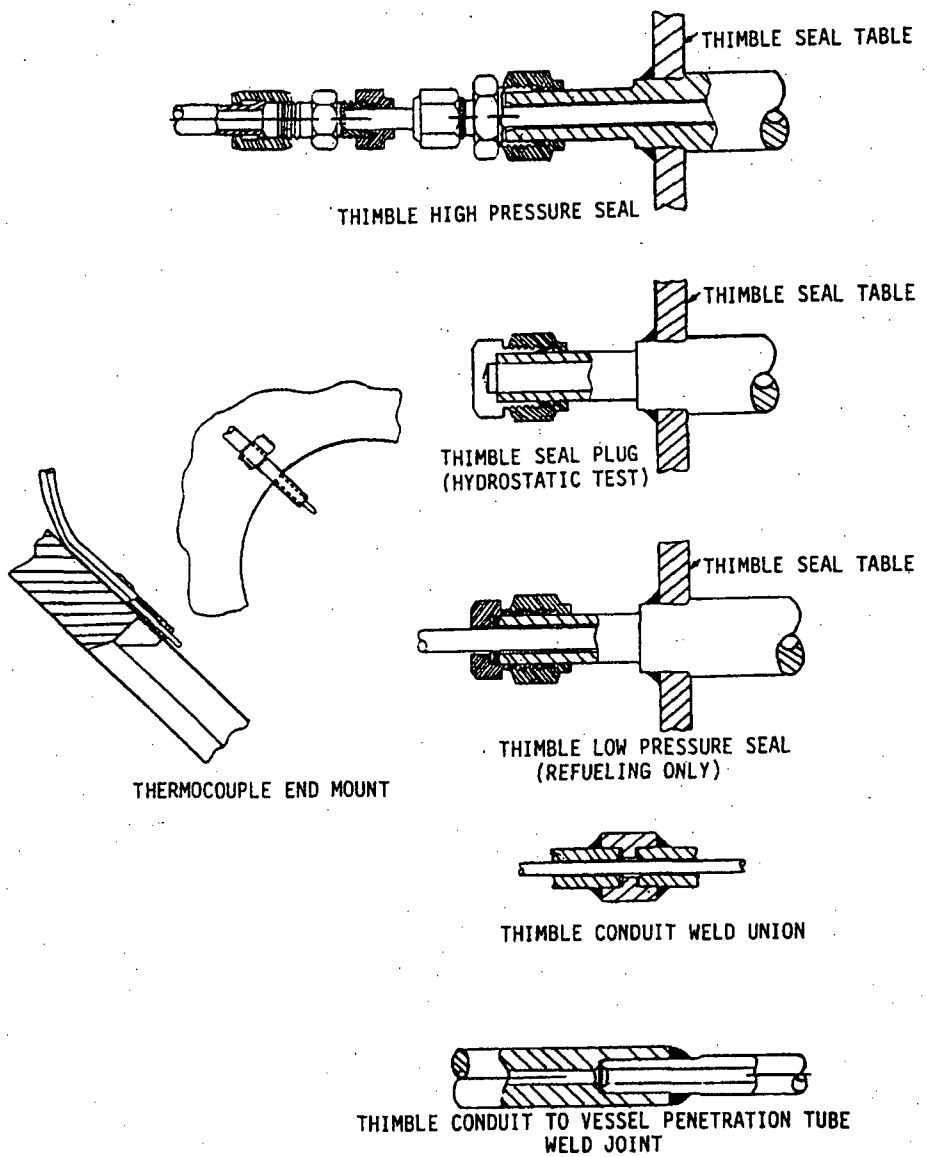

ROCHESTER GAS AND ELECTRIC CORPORATION
R.E. GINNA NUCLEAR POWER PLANT
UPDATED FINAL SAFETY ANALYSIS REPORT

Figure 7.7-12, Sheet 1 of 2
In-Core Instrumentation - Details

Figure 7.7-12 Sheet 2 - In-Core Instrumentation, Details

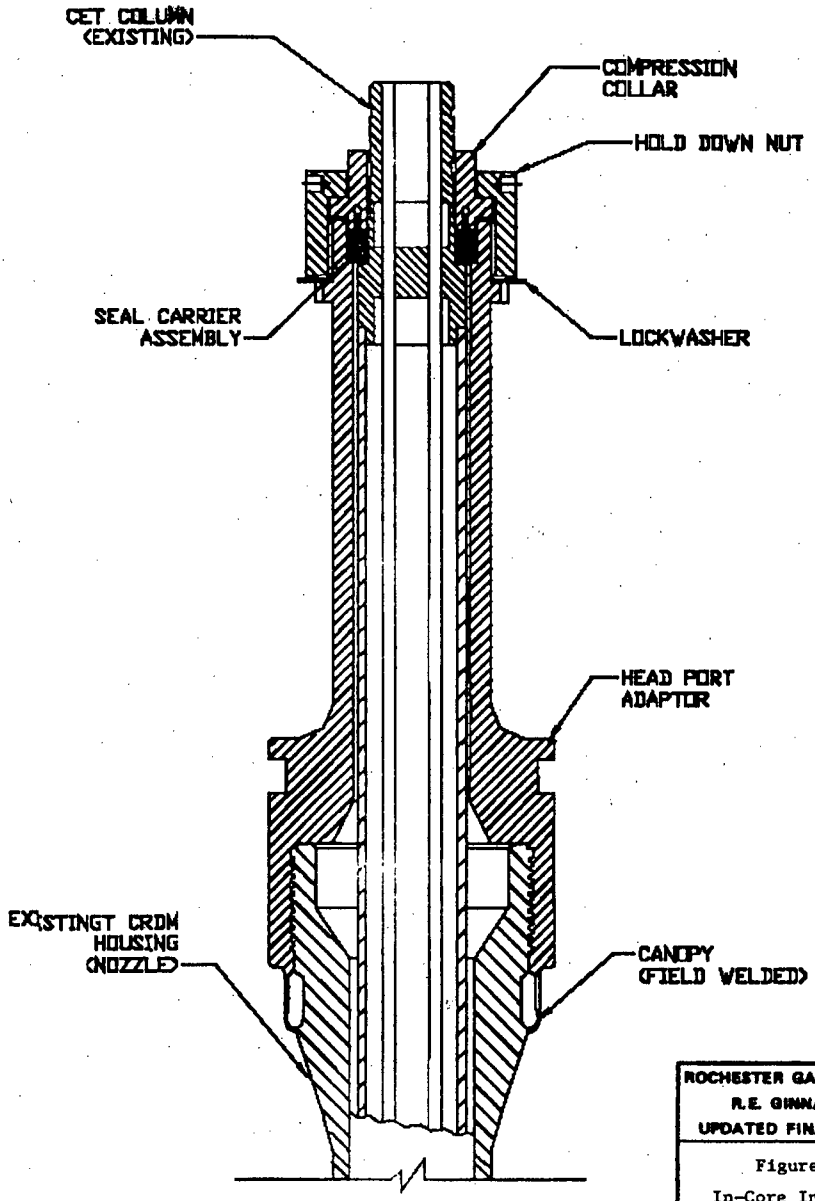

ROCHESTER GAS AND ELECTRIC CORPORATION
R.E. GINNA NUCLEAR POWER PLANT
UPDATED FINAL SAFETY ANALYSIS REPORT

Figure 7.7-12, Sheet 2 of 2
In-Core Instrumentation - Details

Figure C
Westinghouse Seal Welded CETNA

Figure 7.7-13 Typical Arrangement of Moveable Miniature Neutron Flux Detector System

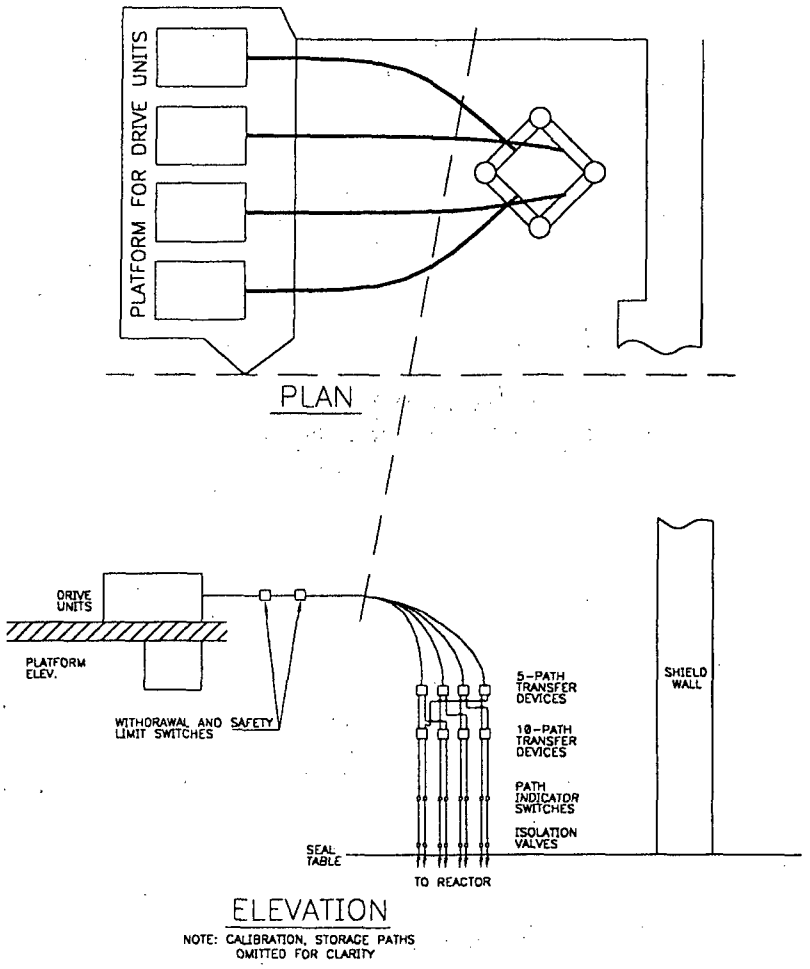

ROCHESTER GAS AND ELECTRIC CORPORATION R.E. GINNA NUCLEAR POWER PLANT UPDATED FINAL SAFETY ANALYSIS REPORT
Figure 7.7-13 Typical Arrangement of Movable Miniature Neutron Flux Detector System

REV. 15 10/99

Figure 7.7-14 Advanced Digital Feedwater Control System Input Signal Validation

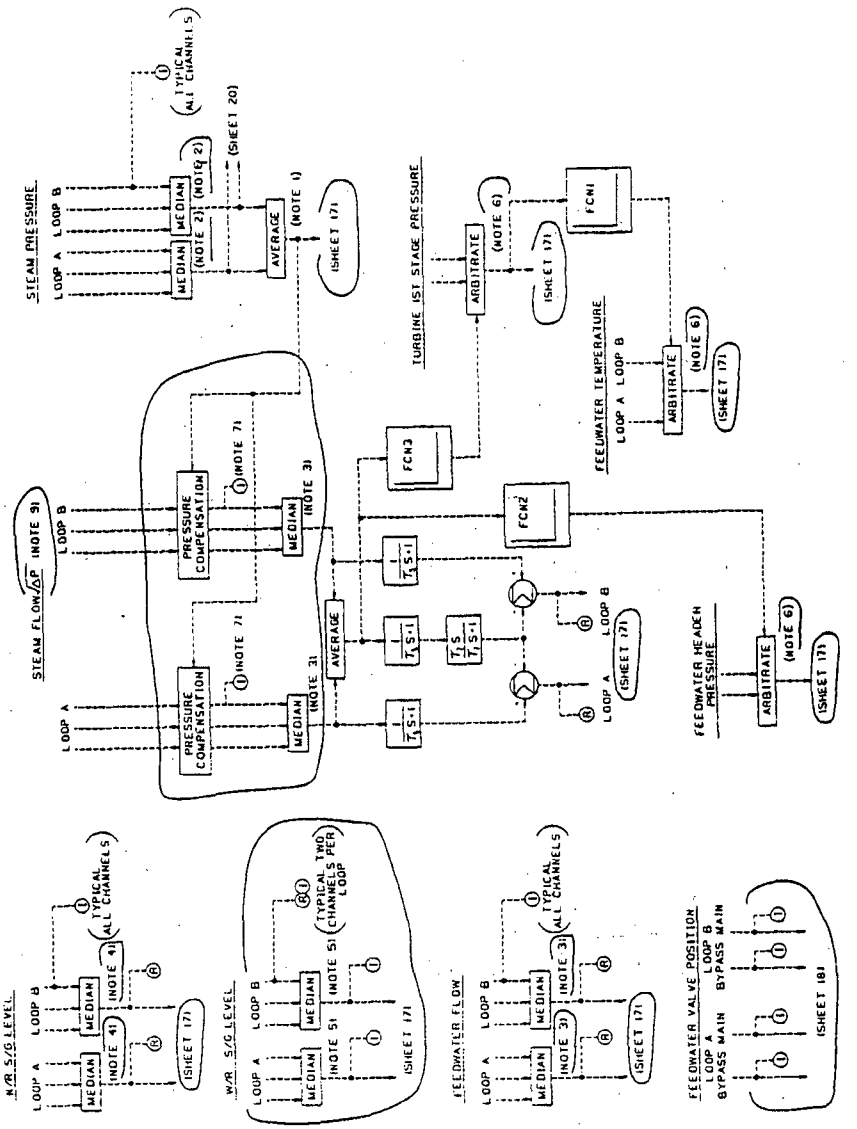

NOTES:
1. UPON FAILURE OF THE MEDIAN VALUE FOR EITHER LOOP, THE AVERAGE SHALL BE SET EQUAL TO THE NON-FAILED VALUE AND FEEDWATER CONTROL REMAINS IN AUTOMATIC. UPON FAILURE OF THE MEDIAN VALUES FOR BOTH LOOPS, FEEDWATER CONTROL FOR BOTH LOOPS SHALL BE SWITCHED TO MANUAL.
2. UPON FAILURE OF THE MEDIAN VALUE FOR EITHER LOOP, ATMOSPHERIC RELIEF VALVE CONTROL FOR THE AFFECTED LOOP SHALL BE SWITCHED TO MANUAL.
3. UPON FAILURE OF THE MEDIAN VALUE FOR EITHER LOOP, BOTH LOOPS OF FEEDWATER CONTROL SHALL BE SWITCHED TO MANUAL.
4. UPON FAILURE OF THE MEDIAN VALUE FOR EITHER LOOP, FEEDWATER CONTROL FOR THE AFFECTED LOOP SHALL BE SWITCHED TO MANUAL.
5. UPON FAILURE OF THE MEDIAN VALUE IN EITHER LOOP WHILE IN THE LOW-POWER MODE, FEEDWATER CONTROL REMAINS IN AUTOMATIC AND THE ALTERNATE GAIN (K_{TFW2}) IS APPLIED TO NARROW-RANGE LEVEL ERROR (SEE SHEET 17).
6. UPON FAILURE OF BOTH INPUT SIGNALS, THE VALUE OF THE ARBITRATOR SIGNAL SELECTOR SHALL BE SET EQUAL TO THE VALUE OF THE ARBITRATOR SIGNAL.
7. STEAM FLOW INDICATIONS FOR TWO CHANNELS PER LOOP ARE DRIVEN BY SEPARATE, ISOLATED, PRESSURE COMPENSATED SIGNALS FROM THE PROTECTION SYSTEM.
8. DELETED.
9. SQUARE ROOT EXTRACTION IS PERFORMED IN THE ADFCS INPUT HARDWARE.

ROCHESTER GAS AND ELECTRIC CORPORATION
R. E. GINNA NUCLEAR POWER PLANT
UPDATED FINAL SAFETY ANALYSIS REPORT

Figure 7.7-14

Advanced Digital Feedwater Control System Input Signal Validation

Westinghouse Drawing 882D612, Revision 2

REV 7 12/91

Figure 7.7-15 Advanced Digital Feedwater Control System Flow Controller and C_v Demand

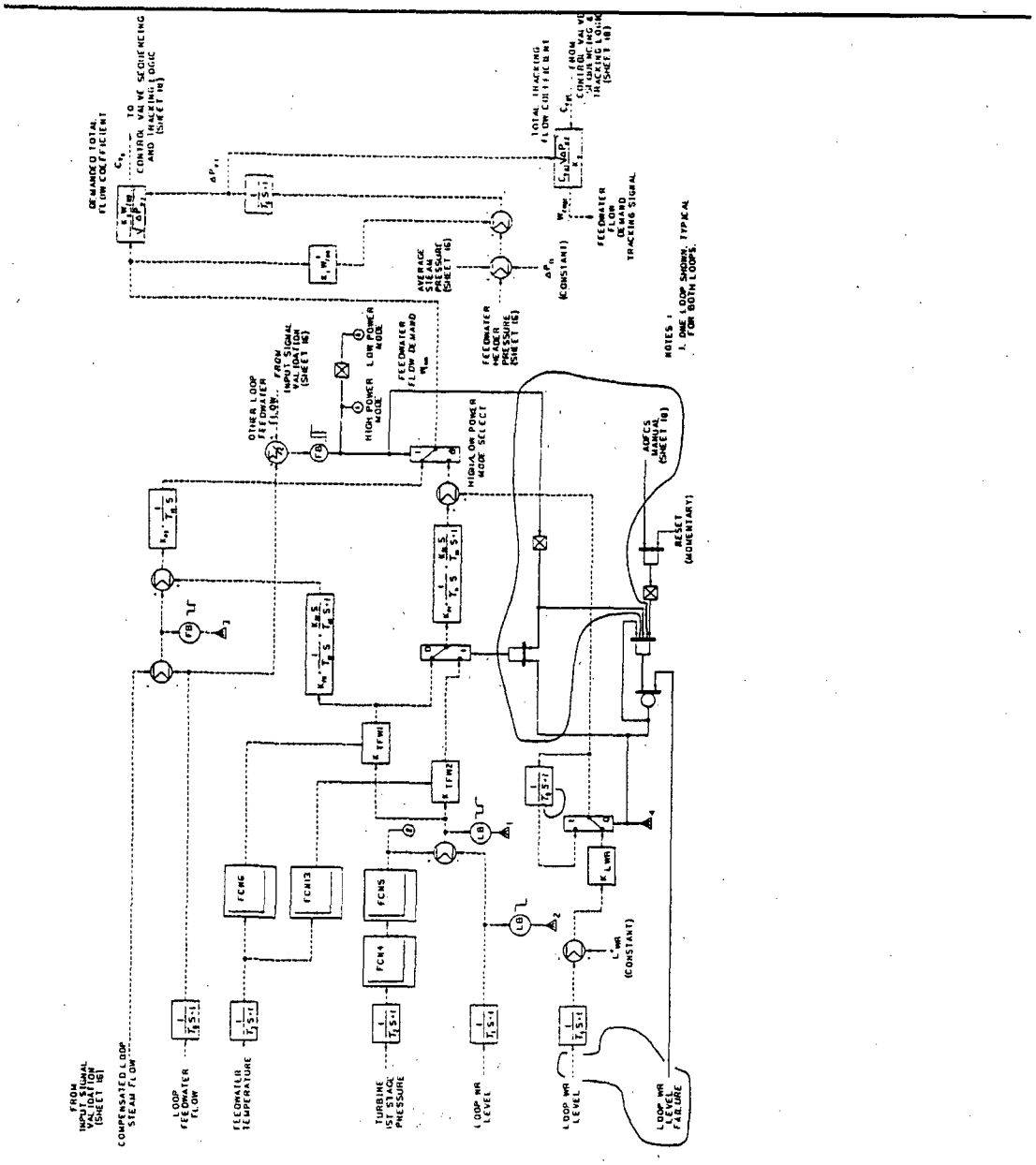

ROCHESTER GAS AND ELECTRIC CORPORATION
R. E. GINNA NUCLEAR POWER PLANT
UPDATED FINAL SAFETY ANALYSIS REPORT

Figure 7.7-15

Advanced Digital Feedwater Control System Flow Controller and C_v Demand

Westinghouse Drawing 882D612, Revision 2

REV 7 12/91

Figure 7.7-16 Advanced Digital Feedwater Control System Valve Sequence and Tracking Logic

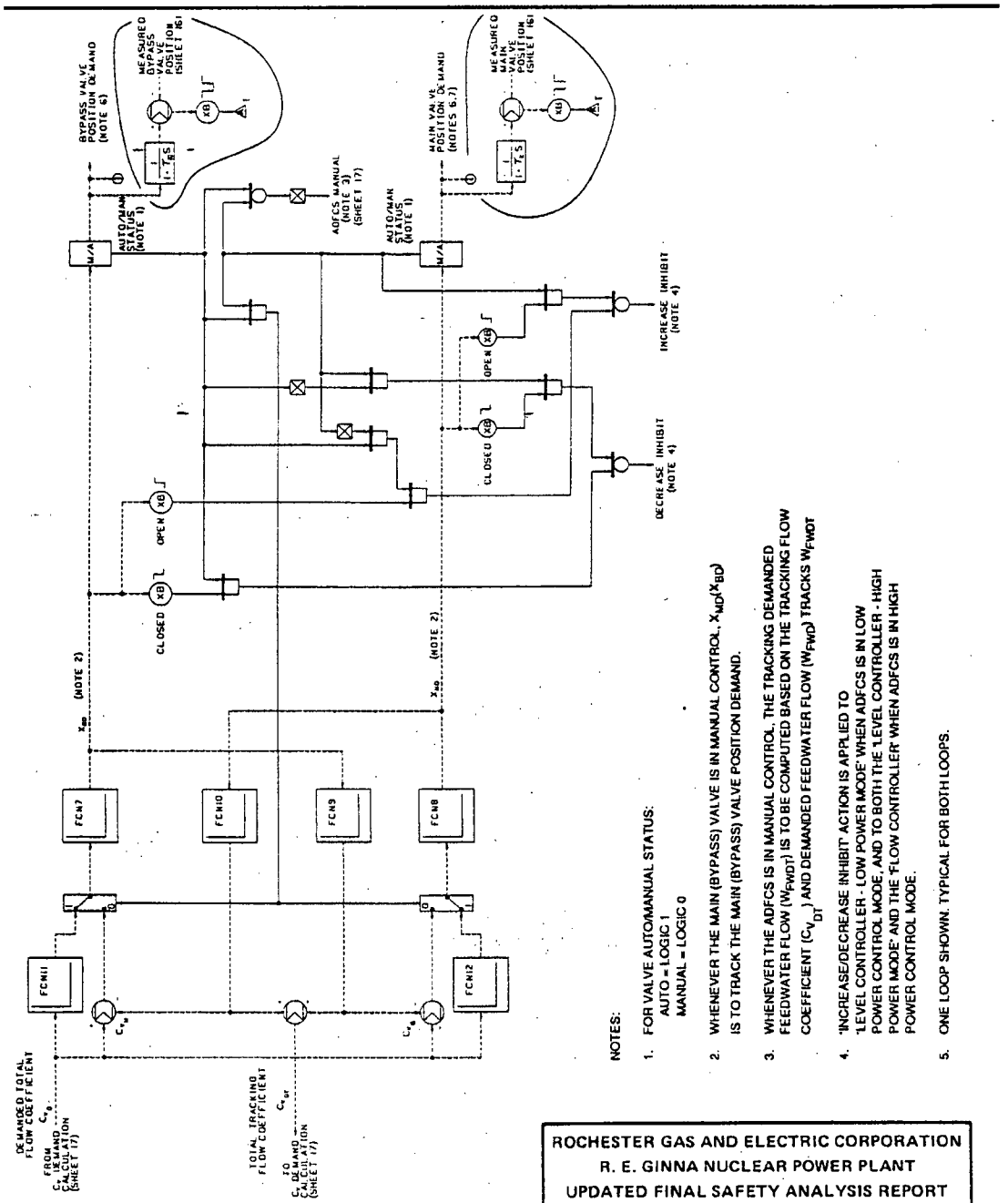

Westinghouse Drawing 882D612, Revision 2

ROCHESTER GAS AND ELECTRIC CORPORATION
R. E. GINNA NUCLEAR POWER PLANT
UPDATED FINAL SAFETY ANALYSIS REPORT

Figure 7.7-16

Advanced Digital Feedwater Control System Valve Sequence and Tracking Logic

REV 7 12/91

8 ELECTRIC POWER

8.1 INTRODUCTION

8.1.1 GENERAL

The electrical power system for the R. E. Ginna Nuclear Power Plant is shown in Figure 8.1-1. The system has three basic power sources:

I. Offsite power (from the transmission system through the station auxiliary transformers 12A and 12B).

II. Onsite power (from the main generator through the station unit auxiliary transformer 11).

III. Emergency onsite power (from the diesel generators).

The electrical power system was initially designed with a single station auxiliary transformer (12A) but a spare transformer (12B) was added after the beginning of commercial operation. The station auxiliary transformers are used to supply the normal auxiliary power during plant startup and shutdown. During normal power operation, the station auxiliary transformers remain energized, essentially unloaded (except for supplying 1E loads), and plant auxiliary power is supplied from the main generator via the station unit transformer. With the plant not operating, and offsite power not available, the principal source of power for vital electrical loads is from the emergency diesel generators. For long-term outages of offsite power a backup source of power for the diesel generators is from the normally outgoing power feeder. Power can be brought in over this feeder to the station unit transformer by removing the flexible generator bus disconnects (links) to disconnect the main generator.

The overall reliability of the plant electrical system design has been well established by the following features:

- Providing alternate and emergency power sources.
- Providing two independent offsite power sources.
- Bringing in power from offsite via normal outgoing power feeder by disconnecting the generator from its isolated phase bus.
- Isolation and separation of components, buses, feeders, etc.
- Designing the emergency power system to permit outage of one diesel-generator unit and still maintain ability to carry emergency load on the system.
- Redundancy in system where required for plant safety.
- Protective features to isolate faults without damage to other components and systems.
- Onsite and reserve fuel supplies for diesel generators to permit uninterrupted operation for the duration of any emergency.
- Use of reliable equipment.

8.1.2 OFFSITE POWER DESCRIPTION

The Rochester Gas and Electric Corporation transmission system provides two basic and interrelated functions for Ginna Station. It supplies all auxiliary power for startup and normal shutdown and Class 1E auxiliary loads during MODES 1 and 2 via the station auxiliary

transformers, and it delivers the output of the station to the grid. During normal startup and operation, the station auxiliary transformers are supplied from two separate offsite feeders. Each of these feeders is capable of supplying the entire auxiliary power load. During normal shutdown, all auxiliary loads are transferred to the station auxiliary transformers prior to securing the main generator.

The offsite power system is described in detail in Section 8.2.

8.1.3 ONSITE POWER DESCRIPTION

The function of the electrical power system is to provide reliable power to those auxiliaries required during any normal or emergency mode of plant operation. The design of the system is such that sufficient independence or isolation between the various sources of electrical power is provided in order to guard against concurrent loss of all auxiliary power.

The main generator feeds electrical power at 19 kV through an isolated phase bus to the generator step-up transformer, which steps this voltage up to 115 kV for distribution offsite. The bulk of the power required for station auxiliaries when the main generator is online is normally supplied by a station unit transformer connected to the isolated phase bus. The Class 1E auxiliary loads are supplied by the station auxiliary transformers connected to offsite power sources.

The station unit transformer 11 is capable of supplying the entire auxiliary load under normal operating conditions. If power from the main generator is interrupted, auxiliary loads necessary for plant shutdown are transferred automatically to one or both of the station auxiliary transformers 12A and 12B depending on the lineup at the time. Referring to Figure 8.1-1, breakers 12AX, 12AY, 12BX and 12BY can be lined up so that the load is split between transformers 12A and 12B or the entire load is aligned to transformer 12A or 12B (see Section 8.2.1.2).

When the reactor trips concurrent with an outage of offsite power, the emergency diesel generators will automatically assume vital station auxiliary loads necessary for safe shutdown as described in Section 8.3.1.2.6. These loads will be transferred to the diesel generators when the last source of voltage decreases to a preset value and the diesel generators come up to speed and voltage.

The onsite power system is described in detail in Section 8.3.

8.1.4 PRINCIPAL DESIGN CRITERIA

8.1.4.1 Performance Standards

The following electrical design criteria were used during the licensing of Ginna Station. They represent the Atomic Industrial Forum version of proposed criteria issued by the AEC for comment on July 10, 1967. Conformance with the General Design Criteria (GDC) of 10 CFR 50, Appendix A, is discussed in Section 8.1.4.3.

CRITERION: Those systems and components of reactor facilities which are essential to the prevention or to the mitigation of the consequences of nuclear accidents which

could cause undue risk to the health and safety of the public shall be designed, fabricated, and erected to performance standards that will enable such systems and components to withstand, without undue risk to the health and safety of the public, the forces that might reasonably be imposed by the occurrence of an extraordinary natural phenomenon such as earthquake, tornado, flooding condition, high wind, or heavy ice. The design bases so established shall reflect: (a) appropriate consideration of the most severe of these natural phenomena that have been officially recorded for the site and the surrounding area and (b) an appropriate margin for withstanding forces greater than those recorded to reflect uncertainties about the historical data and their suitability as a basis for design. (AIF-GDC 1)

All electrical systems and components vital to plant safety, including the emergency diesel generators, are designed as Seismic Category I and designed so that their integrity is not impaired by the maximum potential earthquake, wind storms, floods, or disturbances on the external electrical system. Power, control and instrument cabling, motors, and other electrical equipment required for operation of the engineered safety features are suitably protected against the effects of either a nuclear system accident or of severe external environmental phenomena. Such protection ensures a high degree of confidence in the operability of such components in the event that their use is required.

Specific operability requirements for electrical systems and components are provided in the Technical Specifications.

8.1.4.2 Emergency Power

CRITERION: An emergency power source shall be provided and designed with adequate independence, redundancy, capacity, and testability to permit the functioning of the engineered safety features and protection systems required to avoid undue risk to the health and safety of the public. This power source shall provide this capacity assuming a failure of a single active component. (AIF-GDC 39)

Independent alternate power systems are provided with adequate capacity and testability to supply the required engineered safety features and protection systems.

The plant is supplied with normal, standby, and emergency power sources as follows:

A. The normal source of auxiliary power during plant operation is the main generator. Power is supplied via the station unit transformer (11) which is connected to the main leads of the generator, except for safeguards loads required during MODES 1 and 2, which are supplied from transformers 12A and 12B and the offsite sources.

B. Standby power required during plant startup, shutdown, and after reactor trip is supplied from the Rochester Gas and Electric Corporation (RG&E) 115-kV system by two independent 34.5-kV lines to the station auxiliary transformers 12A and 12B.

C. Two diesel-generator sets are connected to the engineered safety features buses to supply emergency shutdown power in the event of loss of all other ac auxiliary power.

D. Emergency power supply for vital instruments, for control, and for emergency lighting is supplied from the two 125-V dc station batteries.

The diesel-generator sets are located adjacent to the turbine building and are connected to separate 480-V auxiliary system buses. Each set will be started automatically on a safety injection signal or upon undervoltage on its corresponding 480-V auxiliary buses. Each diesel is adequate to supply the engineered safety features for the design-basis accident concurrent with loss of offsite power. This capacity is adequate to provide a safe and orderly plant shutdown in the event of loss of offsite electrical power.

The starting of the diesel-generator sets can be tested from the control room. The ability of the units to start within the prescribed time and to carry intended loads is periodically tested in accordance with the Technical Specifications to demonstrate that they will provide power for operation of equipment. Diesel-generator testing ensures that the emergency generator system controls and the control systems for safeguards equipment will function automatically in the event of a loss of all normal 480-V ac station service power or in the event of a safety injection signal. Diesel-generator trips are also tested periodically.

The testing frequency specified is often enough to identify and correct any mechanical or electrical deficiency before it can result in a system failure. The control components are in enclosures. The fuel supply and starting circuits and controls are continuously monitored and any faults are alarm indicated. An abnormal condition in these systems would be signaled without having to place the diesel generators on test.

8.1.4.3 Adequacy of Electrical Design Relative to 1972 Criteria

The adequacy of the Ginna Station electrical design relative to the following General Design Criteria (GDC) is discussed in Section 3.1.2:

- GDC 2, Design Bases for Protection Against Natural Phenomena.
- GDC 4, Environmental and Missile Design Bases.
- GDC 5, Sharing of Structures, Systems, and Components.
- GDC 17, Electrical Power Systems.
- GDC 18, Inspection and Testing of Electrical Power Systems.
- GDC 50, Containment Design Basis.

The conformance with the following Safety and Regulatory Guides and IEEE Standards is discussed in Section 1.8.

- Safety Guide 6, Independence Between Redundant Standby (Onsite) Power Sources and Between Their Distribution Systems.
- Safety Guide 9, Selection of Diesel-Generator Set Capacity for Standby Power Supplies.
- Regulatory Guide 1.32; Use of IEEE Standard 308-1971, Criteria for Class 1E Electric Systems for Nuclear Power Generating Stations.
- Regulatory Guide 1.47, Bypassed and Inoperable Status Indication for Nuclear Power Plant Safety Systems.

- IEEE 308-1971, Class 1E Electrical Systems for Nuclear Power Generating Stations.
- IEEE 317-1971, Electrical Penetration Assemblies in Containment Structures for Nuclear Fueled Power Generating Stations.
- IEEE 323-1971, Qualifying Class I Electric Equipment for Nuclear Power Generating Stations.
- IEEE 336-1971, Installation, Inspection, and Testing Requirements for Instrumentation and Electric Equipment During the Construction of Nuclear Power Generating Stations.
- IEEE 344-1971, Seismic Qualification of Class I Electric Equipment for Nuclear Power Generating Stations.

Routing and separation standards applicable to existing cables are those that were invoked at the time of cable installation. For more information, see Section 8.3.1.4.

8.1.4.4 Potential Risk of Station Blackout

The likelihood of a station blackout event at Ginna Station is very low, in part because of the high reliability of the emergency diesel generators. The calculated diesel-generator reliability is 0.990 and is supported by an Electric Power Research Institute study (EPRI Data Base on Diesel Generator Reliability), which shows that for the 1983-1985 time period the reliability was 0.991.

Although severe weather increases the probability of a loss of offsite power, it has only a slight effect on the risk of a station blackout. The emergency power systems at Ginna Station were thoroughly reviewed for operability in the instances of severe and extreme natural phenomena such as floods, tornadoes, and snowstorms as part of the Systematic Evaluation Program (SEP). The Ginna Station design basis, therefore, already includes the system design features and procedures to ensure that no unacceptable loss of emergency onsite power will occur during severe weather events.

Additional safety features independent of the emergency ac power distribution system are available at Ginna Station. In addition to the 200%-capacity turbine-driven auxiliary feedwater system (TDAFW), Ginna Station has (a) a diesel-driven air compressor, which can charge the instrument air and service air systems, (b) a diesel-driven fire pump taking suction from Lake Ontario, which can provide an inexhaustible source of secondary cooling water to the steam generators, and (c) a technical support center battery system, with 2880 amp-hr capacity, which can be cross-connected to either station battery to supply vital loads on one train for much longer than 4 hours.

An evaluation has been performed against the requirements of the station blackout rule (10 CFR 50.63) using guidance from NUMARC 87-00 (*Reference 1*) and Regulatory Guide 1.155 (*Reference 2*) except for the analyses for the effects of loss of ventilation where a plant-specific analysis was used. Using NUMARC 87-00, Section 3, 4 hours was determined to be the Ginna Station blackout coping duration. Ginna Station is able to cope with a station blackout of 4 hours. (*References 3*, *4*, and *5*).

The station blackout rule requires that the following issues be addressed: station blackout duration, condensate inventory for decay heat removal, Class 1E battery capacity, compressed

air, effects of loss of ventilation, containment isolation, reactor coolant inventory, procedures and training, quality assurance and Technical Specifications, and the emergency diesel generator reliability program. The NRC safety evaluation (*Reference 6*) and supplemental safety evaluation (*Reference 7*) concluded that the following station blackout issues were acceptably resolved: condensate inventory for decay heat removal, Class 1E battery capacity, containment isolation, and reactor coolant inventory.

8.1.4.5 Station Blackout Program

A station blackout program has been developed for Ginna Station. The Station Blackout Program manual (*Reference 8*) is a comprehensive document that presents the history, regulatory commitments, calculations, bases, procedure changes, and modifications that were implemented to reduce the risk of consequences during a station blackout. Contained in the manual is the documentation required to substantiate Ginna's submittals to the NRC pursuant to 10 CFR 50.63 (*References 3*, *4*, and *9*). Regulatory commitments for station blackout are also listed in the program manual with an implementation summary.

8.1.4.5.1 Assumptions

The NUMARC 87-00 general criteria and baseline assumptions for the Station Blackout Program are the following: general criteria, initial plant conditions, initiating event, station blackout transient, reactor coolant inventory loss, operator action, effects of the loss of ventilation, system cross-tie capability, instrumentation and controls, containment isolation valves, and hurricane preparations.

As established in the baseline assumptions contained in Section 2 of NUMARC 87-00, the station blackout event is assumed to occur while the reactor is normally operating at 100% power after having been in that mode for 100 days. The initiating event is the loss of offsite power resulting from either a switchyard related event due to random faults, an external event such as grid disturbance, or a weather event that affects the offsite power either throughout the grid or at the plant. Following the loss of offsite power event, if neither of the emergency diesel generators start on demand to provide onsite AC power, the plant operators will implement the emergency contingency action procedure which addresses the loss of all AC power.

Loss of offsite power events caused by fire, flood or seismic activity are not expected to occur with sufficient frequency to require explicit criteria and therefore are not required to be addressed. No design basis accidents or other events are assumed to occur immediately prior to or during the station blackout.

Station blackout transient assumptions as presented in NUMARC 87-00 stipulate that following the loss of all offsite power the reactor is assumed to automatically trip with sufficient shutdown margin to maintain subcriticality at MODE 3 (Hot Shutdown) or MODE 4 (Hot Standby). Based on the Ginna configuration, an automatic reactor trip will not necessarily result from the loss of offsite power. However, Ginna Station emergency procedures specify operator action to manually trip the reactor in the event of a loss of all AC power.

In NUMARC 87-00, it is also assumed that throughout the station blackout transient the main steam system valves (such as main steam isolation valves, turbine stops, atmospheric dumps,

etc.) necessary to maintain decay heat removal functions operate properly. In addition, it is assumed that safety/relief valves or Pressurizer Power Operated Relief Valves (PORV) operate properly which includes the assumption that the valves reseat normally. The event is presumed to end when AC power is restored to the safety-related 480-v buses from any source.

The potential for mechanistic failures resulting from the loss of HVAC in a station blackout event has been addressed. No independent failures, other than those causing the station blackout event, are assumed to occur in the course of the transient. Within 4 hours of the start of the event, AC power is assumed to become available to necessary safe shutdown equipment from either the onsite supply or the emergency diesel generators.

Sources of reactor coolant system leakage during a station blackout at Ginna are presumed to include normal system leakage (11 gpm) and reactor coolant pump seal leakage (25 gpm) for a total leakage of 61 gpm. Under these conditions, the reactor core will remain covered with the reactor coolant inventory for the 4-hour duration of a station blackout.

8.1.4.5.2 Ventilation

An evaluation of expected room temperature during a station blackout was performed. The main dominant areas of concern for loss of ventilation failures were determined to be the areas near the Atmospheric Relief Valves (ARV) and the turbine driven auxiliary feedwater pump (TDAFW) in the intermedate building. The control room, battery rooms, and relay room were also identified as containing station blackout coping equipment. The following conservative maximum temperatures for a 4-hour coping period were determined: Atmospheric Relief Valve (ARV) area, 179°F; turbine driven auxiliary feedwater pump (TDAFW) area, 145°F provided the double doors on the north wall to the turbine building are opened within 30 minutes of the station blackout onset; control room area, 116°F, provided the doors to the turbine building are opened within 30 minutes; battery rooms, 108.2°F; and relay room, 103°F. These temperatures demonstrated that reasonable assurance of equipment operability was provided in accordance with NUMARC 87-00.

8.1.4.5.3 Plant Classification

Under the NUMARC 87-00 guidelines, Ginna Station is classified as a P2 plant, with P1 plants being least susceptible and P3 plants being most susceptible to extended offsite power losses.

8.1.4.5.4 Diesel Generator Reliability

An emergency diesel generator reliability target of 0.975 is required to achieve a 4-hour coping duration when a NUMARC 87-00 EAC Group C site classification is used in conjunction with the P2 plant classification. "Exceedance" trigger values are utilized to support emergency diesel generator reliability and unavailabilty performance. Should the specified trigger values be exceeded, appropriate remedial actions are taken. The target emergency diesel generator trigger values are specified in the Emergency Diesel Generator Reliability and Unavailability Performance Criteria Program.

8.1.4.5.5 Diesel Generator Cold Starts

NUMARC station blackout Initiative 3 was structured to provide utility attention toward reducing, as much as possible, cold starting of emergency diesel generators during test conditions. A cold start is defined as an attempt to start an emergency diesel generator from ambient conditions without the presence of pre-warmed circulating water or pre-warmed pre-lubrication. The diesel generators are maintained continuously pre-warmed and therefore are not expected to have cold starts. Each emergency diesel generator is provided with jacket water and lube oil heating devices to maintain the engine coolant and lube oil temperature at an operable level for fast and reliable starting. A motor-driven lube oil circulating pump runs continuously until the engine is started resulting in bearings which are always lubricated and ready for operation.

REFERENCES FOR SECTION 8.1

1. Nuclear Management and Resources Council, Guidelines and Technical Bases for NUMARC Initiatives Addressing Station Blackout at Light Water Reactors, NUMARC 87-00, November 23, 1987.

2. U.S. Nuclear Regulatory Commission, "Station Blackout," Regulatory Guide 1.155, August 1988.

3. Letter from R. C. Mecredy, RG&E, to T. E. Murley, NRC, Subject: 10 CFR 50.63 Station Blackout, dated April 17, 1989.

4. Letter from R. C. Mecredy, RG&E, to T. E. Murley, NRC, Subject: 10 CFR 50.63 Station Blackout, dated July 10, 1990.

5. Letter from R. C. Mecredy, RG&E, to A. R. Johnson, NRC, Subject: 10 CFR 50.63, Loss of All Alternating Current Power, dated April 22, 1991.

6. Letter from A. R. Johnson, NRC, to R. C. Mecredy, RG&E, Subject: Station Blackout Safety Evaluation, dated January 30, 1992.

7. Letter from A. R. Johnson, NRC, to R. C. Mecredy, RG&E, Subject: Station Blackout Rule Supplemental Safety Evaluation, dated September 23, 1992.

8. Station Blackout Program, EWR 4520 Revision 1, dated August 26, 1999.

9. Letter from R.C. Mecredy, RG&E, to A.R. Johnson, NRC, Subject: Station Blackout, dated September 26, 1994.

Figure 8.1-1 Electrical Distribution System

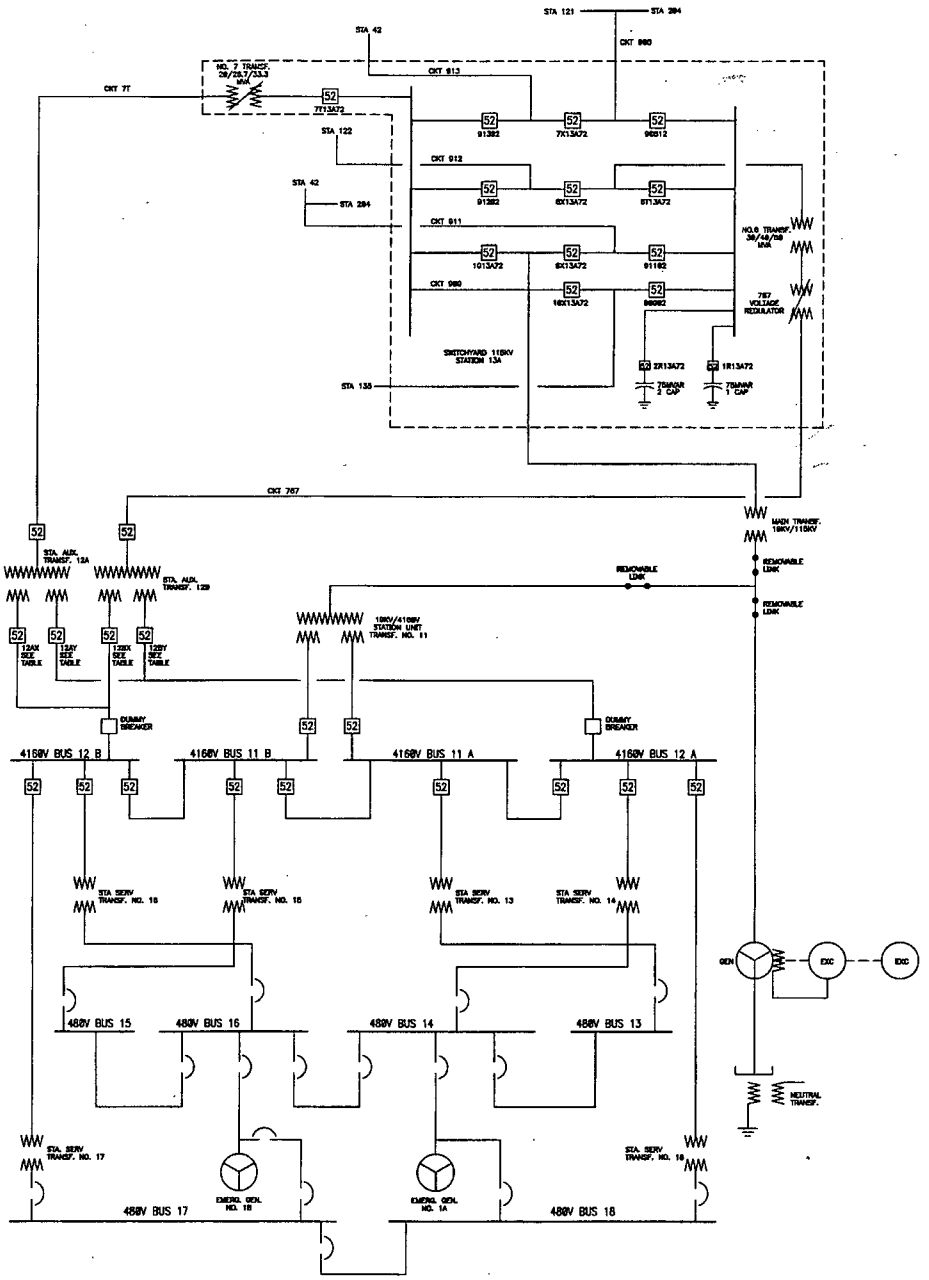

OFFSITE POWER ALIGNMENT	52/12BX	52/12BY	52/12AX	52/12AY
50/50 NORMAL	NC	NO	NO	NC
50/50 ALTERNATE	NO	NC	NC	NO
100/0	NC	NC	NO	NO
0/100	NO	NO	NC	NC

8.2 OFFSITE POWER SYSTEM

8.2.1 DESCRIPTION

A single-line diagram showing the connections of the main generator and off-site power supplies to the power system grid is shown in Figure 8.2-1.

8.2.1.1 Transmission System

8.2.1.1.1 Step-up Transformers

Electric energy, generated at 19 kV, is raised to 115 kV by the generator step-up transformer and delivered from Ginna to station 13A (switchyard) via four 115-kV underground pipe type cables through 115-kV, 3000-amp circuit breakers. The remaining breakers at the station are 115 kV, 1600 amp, and 2000 amp. Five 115-kV transmission circuits emanate from the station; circuits 911 and 913 connect into the main Rochester Gas and Electric Corporation (RG&E) transmission network via station 42; circuits 908, **909** and 912 connect to the 115-kV transmission network at RG&E stations 121, **135,** and 122, respectively.

8.2.1.1.2 Transmission Lines

Five 115-kV lines (908, **909,** 911, 912, and 913 described above) connect to station 13A through the "breaker-and-a-half" technique of switching (Figure 8.1-1). As they leave station 13A toward station 204, four of the five lines are supported on two separate rows of structures. Specifically, circuits 908 and 913 are on one set of structures and circuits 911 and 912 are on a second set of structures. The fifth line (circuit 909) has its own set of structures on the east side of the right-of-way. **Circuit 909 terminates at station 135 (Rt 104 and Slocum Road). Circuit 929 ties station 135 to station 121.** The structures for the two pairs of lines are spaced sufficiently far apart on the right-of-way so that a structure carrying one pair of lines cannot fall on a structure carrying the other pair. Structural anchoring is installed on the structures for the fifth line to minimize transverse collapse. For all lines, except for the steel structures used at corners in the line, the transmission is on multiple cross-arm wooden poles.

South of station 204 for approximately 4 miles, each of the **five** lines (908, **929,** 911, 912, and 913) is located on its own wood structure on a right-of-way. **Three** lines extend south from this point to RG&E stations 121 and 122 and two lines extend west to RG&E station 42 on separate rights-of-way. Transverse cascading of these structures is extremely remote because safety factors in excess of 250% have been used in all phases of their design.

Different span lengths are employed on the four main circuits with structural anchoring utilized at regular intervals along the right-of-way. In addition, the capacity of any single 115-kV line greatly exceeds (1) the power requirements of engineered safety features, which are satisfied by two 2500-kVA diesel generators, (2) the auxiliary plant load, which is about 29 MVA, and (3) the capacities of circuits 7T or 767, which deliver power at 34.5 kV to the plant. Circuit 767, one 34.5-kV offsite source, is fed from the 115-kV/34.5-kV transformer 6 at station 13A and is routed underground to 34.5-kV/4.16-kV transformer 12B at Ginna Station. A voltage regulator was installed on circuit 767 in 1996. Circuit 7T , the second 34.5-kV offsite source, is fed from the 115-kV/34.5-kV transformer 7 at station 13A and is routed

underground to 34.5-kV/4.16-kV transformer 12A. Transformer 7 is a load tap changing (LTC) design. Circuits 767 and 7T are run over different routes than the four 115-kV lines to substation 13A.

8.2.1.1.3 Circuit Breakers

The generator, its isolated phase bus, the generator step-up transformer, the station unit transformer (11), and the four oil pipe type cables that deliver the output to the station 13A are protected by circuit breakers as a unit. Protection through differential and pilot wire relaying will provide for isolation of the unit within six cycles in the event of a fault within the protected zones. Additional protection in the form of negative sequence, loss of excitation, phase protection, stator ground, and reverse power relaying provides adequate protection for faults within the unit. Any one of the pipe type cables can be electrically disconnected after deenergizing the pipe type cables and then the remaining pipe type cables can be reenergized and the unit returned to service. During deenergization of the pipe type cables, auxiliary power would be available to the plant from the 115-kV /34.5-kV transformer 6 at station 13A via circuit 767, and/or the 115-kV/34.5-kV transformer 7 at station 13A via circuit 7T to supply normal shutdown power.

The breaker-and-a-half layout (seen in Figure 8.1-1) of station 13A consists of **eleven** breakers, three rated at 3000 amp, two at 2000 amp, and six at 1600 amp. One 3000-amp-rated breaker is used to feed one bus section from the generator and two in series are used to feed the other bus section with circuit 911 tapped between the breakers. The breaker-and-a-half layout provides the versatility of dual feed for each line and the ability to remove any breaker or transmission line without deenergizing any other part of the station.

Station 13A has a **twelfth** circuit breaker (rated at 2000 amp) to supply transformer 7 and circuit 7T. **This breaker is** fed from bus section #1. **The station also has two 75 MVAR capacitor banks fed by two 2000 amp zero crossing breakers from bus section #2.** The breaker-and-a-half design is not used on these **circuit/capacitors**.

Failure of either primary breaker for the generator, transformer, and oil pipe type cables to open would be backed up by a secondary breaker operation. Operation of the secondary breaker backing up one of the primary breakers (9X13A72) would result in loss of circuit 911. Operation of the **four** breakers backing up the other primary breaker (1G13A72) would result in the loss of circuit **7T**.

Administrative procedures are utilized to ensure Ginna generation does not exceed the capability of the output circuits when output breakers and/or transmission lines are out of service.

8.2.1.1.4 Protective Relay Circuits

The basic transmission system buses at all the stations are protected with high-speed differential protection with primary and secondary relay circuits. Breaker backup protection is obtained by operating adjacent and remote breakers. Backup tripping is initiated after a five-cycle delay circuit has found that the breaker has failed to clear. Total elapsed time between a fault and the isolation of the stuck breaker should not exceed 10.1 cycles.

The **five** 115-kV transmission lines are each protected by primary and secondary relays, which function independently of one another. These relays initiate tripping operation by operating their associated tripping relays, which in turn trip the associated breakers and initiate their breaker backup schemes. The primary relays are connected for permissive overreaching transfer tripping (permissive tripping) by utilizing fiber optic cable and multiplex devices.

Separate current transformers and separate potential transformer windings from a two secondary winding transformer are used for primary and secondary relays. Separately fused dc control circuits are used from separate battery systems so that a short circuit in the primary relay control circuits will not incapacitate the secondary relay control circuits, and vice versa.

The primary and secondary protective relay systems are physically separated. Separate control boards are provided for the primary and secondary protective devices. Redundant, independent dc systems including battery, charger, control panel, and segregated control cables are provided for control of oil circuit breakers and the primary and secondary protective relay systems. The control cables between the control boards and oil circuit breakers are separate.

Each set of protective tripping relays energizes separate breaker trip coils, completing the redundancy of relay systems for security and reliability.

The switchyard meets minimum requirements for reliability and security as developed in the Northeast Power Coordinating Council and New York **Independent System Operator** Reliability Criteria as it applies to protective relays.

The primary relays for two 115-kV transmission lines 908 and 913 are three-zone phase (step-distance) and ground relays. In addition, instantaneous overcurrent relays serve as fault detectors to provide security in the relay schemes, since they must operate in order for the distance relay to complete the tripping relay operation. The secondary relays for these two 115-kV transmission lines, are two-zone mho type distance relays. In addition, instantaneous overcurrent relays serve as fault-detectors to provide security in the relay schemes, since they must operate in order for the distance relays to complete the tripping relay operation. **The primary and secondary digital relays for circuit 909 provide three zone distance with overcurrent fault detection security and ground protection.**

The primary relays for two 115-kV transmission lines, 911 and 912, are two-zone mho type distance relays. The secondary relays for these two 115-kV transmission lines, are three-zone (step-distance) phase and ground relays. The fastest relay operation under secondary relaying contingencies occurs in the first zone, where higher fault currents are available. This inherently improves the stability of the system under the most severe failure analysis where higher fault currents prevail.

8.2.1.2 Station Auxiliary (Startup) Transformers 12A and 12B

Ginna Station was originally designed with a single station auxiliary transformer 12A. A spare station auxiliary transformer 12B, was subsequently acquired and in 1977 the spare transformer was permanently connected to the 34.5-kV bus. To increase the availability margin in the event of a single system failure, the 34.5-kV bus was later split and the system con-

figured as shown in Figure 8.1-1. Station auxiliary transformer 12A is connected to circuit 7T and station auxiliary transformer 12B is connected to circuit 767. Circuit 7T receives 34.5 kV from RG&E station 13A via 115 kV to 34.5 kV stepdown transformer 7, which has an integral load tap changer (LTC) for voltage regulation. Circuit 767 receives 34.5 kV from RG&E Station 13A via 115 kV to 34.5-kV stepdown transformer 6. Circuit 767 voltage regulator and transformer 7 ensure acceptable voltages during system transients.

Transformers 12A and 12B are self-cooled/forced-air-cooled three-winding transformers (oil-immersed type), rated 28/37.33 MVA (55°C rise) with 12% higher continuous capability at a 65°C rise. The transformers have two identical secondary windings each exactly half of the total capacity.

The high voltage winding is rated at 34.5-kV, 200-kV basic impulse level. The two secondary windings are each rated at 4.16-kV, 75-kV basic impulse level.

The transformers are equipped with current transformers for metering and relaying, oil-level gauge with alarm, oil temperature indicator with alarm, and a tank pressure relief device with alarm.

Three 30-kV lightning arresters are connected to the high-voltage bushings for lightning protection. In addition, the transformers have high-speed protective relays, including differential, phase and ground backup, that rapidly remove all sources of power during an internal fault to minimize damage.

During normal operations the station auxiliary transformers supply the engineered safeguards (Class 1E) auxiliary loads and the station unit transformer (11) supplies the non-Class 1E auxiliary loads. Transformer 11 is fed by the Ginna Station main generator. During startup, shutdown, and loss of Ginna Station generating capacity, transformers 12A and 12B supply all auxiliary loads because transformer 11 is not available. A main generator trip results in the automatic transfer of the auxiliary loads on buses 11A and 11B to the station auxiliary transformers by the closing of bus ties 11A-12A and 11B-12B and the opening of the transformer 11 feeds (see Figure 8.1-1).

The transformers are very conservatively sized. Each is capable of supplying all plant auxiliary loads for full power operation without exceeding 90% of the forced air rating at 55°C rise. This value will not exceed 33.6 MVA at maximum guaranteed turbine output; however, the transformers are capable of continuous operation at 41.8 MVA at 65° rise . During startup and shutdown of the station, the requirements are considerably less, due to partial loading of many of the auxiliaries. The engineered safety features system load imposed on the transformer is only a fraction of its total rating. During MODES 1 and 2, one secondary winding supplies one 4-kV bus section, which in turn supplies two 4-kV/480-V transformers providing power to the engineered safety features system. This is done to avoid having to transfer those auxiliaries from one secondary winding to another at the time that they are required to operate. Thus the transformer is very lightly loaded during MODES 1 and 2 and the operator is continuously aware of its status.

Breakers 12AX, 12AY, 12BX, and 12BY (see Figure 8.1-1) permit the station auxiliary transformers to be lined up so that transformer 12A supplies one engineered safeguards bus and

transformer 12B supplies the other (50/50 mode), transformer 12A supplies both safeguards buses (0/100 mode), or transformer 12B supplies both safeguards buses (100/0 mode). The 50/50 mode is the normal configuration.

Periodic maintenance is performed by Ginna Station on 12A and 12B transformers to ensure maximum reliability. In addition to inspection and cleaning, oil sampling and analysis are performed and power factor, excitation, and capacitance measurements are made to determine degradation of the oil and insulation.

8.2.2 ANALYSIS

8.2.2.1 Transmission System

8.2.2.1.1 Loss of Ginna Station Output

Upon a sudden loss of Ginna Station generating capacity, the plant auxiliary load, including engineered safety features, would continue to be fed from either one or both of the 34.5-kV lines. The load from transformer 11 would be transferred to the station auxiliary transformers. If the generation was less than 50% capacity, the reactor could remain in operation; if greater than 50%, the plant would be tripped because of steam dump capacity.

The Interconnection Agreement between R. E. Ginna Nuclear Power Plant, LLC and Rochester Gas and Electric Corporation does not require a reduction in power for the loss of any single 115-kV transmission circuit (908, **909,** 911, 912, 913). Upon a loss of any circuit, Ginna Station certifies it can reduce power to net generation levels that will not damage equipment in the event of a subsequent circuit outage.

The main criterion in determining the dependability of the transmission system is to determine if it will remain synchronized with the rest of the system after the most severe fault, sustained for the longest duration under second contingency conditions. Synchronization is maintained for the longest duration fault, 9.5 cycles, if a breaker fails to open and backup breakers must open to clear. The critical clearing time is between 11 and 12 cycles at which time a fault would create electrical instability at Ginna Station.

8.2.2.1.2 Switchyard Direct Current Power System

At station 13A, as in other major stations, dc rather than ac is used for tripping and closing of the breakers in order to remove the possibility of a loss of ac voltage or a reduction to a low value and the inability to operate the trip coil due to a heavy fault on the protected circuit. The dc source consists of two completely independent battery systems.

The dc sources are sufficient to supply station requirements without ac powered chargers for more than 24 hours of normal operation. Duplicate feeds, one from the 115-kV/34.5-kV transformer 6 at station 13A and one at 12 kV from station **132,** provide redundant charging supply to the batteries.

8.2.2.1.3 Transmission Network Protective Features

Arrangements to minimize the probability of power failure due to faults in the network interconnections and the associated switching are as follows:

A. Redundancy is designed into the network interconnections by transmission lines **connected** to the RG&E 115-kV transmission network at stations 121 and 122. **A single** circuit may be interrupted and the **others** will be capable of carrying the required emergency loading.

B. **Three** 115-kV transmission circuits (908, **909,** and 912) are installed on separate structures on the same right-of-way and each line of circuit structures is separated from the **others.**

C. Each circuit is protected from lightning by an overhead shield wire. Switching surge protection is accomplished via surge arresters.

D. The breaker-and-a-half switching arrangement in station 13A includes two full capacity main buses which feed each circuit through a circuit breaker connected to each bus. Primary and secondary relaying are provided for each circuit along with circuit breaker failure backup for fault clearing. These provisions permit the following:

1. Any circuit can be switched under normal or fault switching without affecting another circuit.
2. Any single circuit breaker can be isolated for maintenance without interrupting the power or protection to any circuit.
3. Short circuits of a single main bus will be isolated without interrupting service to any circuit.
4. Failure of a tie breaker to clear a short circuit will result in the loss of its two adjacent circuits until it is isolated by disconnect switches, **except 10X13A72**.
5. Failure of a bus side breaker to clear a short circuit will result in the loss of only one circuit until it is isolated, **except circuit 7T.**
6. Circuit protection against failure of the primary protective relaying is provided by secondary relaying.

With the above protective features, the probability of loss of more than one source of 115-kV power from credible faults is low.

Information on loss-of-offsite-power events is contained in *References 1* and *2*.

8.2.2.1.4 Northeast Power Coordinating Council Load-Shedding Practice

The Northeast Power Coordinating Council (NPCC), of which RG&E is a member, has instituted load-shedding practices based on frequency. Presently the NPCC has established a two-step automatic load scheme that can compensate for a total generation deficiency of 25%. It is within this 25% range that the NPCC expects its members to maintain coordination. "Coordination" is defined as preventing the large generating units from tripping ahead of the load shed relays in hopes of recovering from generation deficiencies. Specifically, coordination requires that Ginna remain on-line until the load-shedding scheme has sufficient time to operate and the system to recover from a mismatch of generation and load. The existing under frequency setpoint which achieves the required coordination is 57.7 Hz.

8.2.2.2 Station Auxiliary (Startup) Transformers 12A and 12B

8.2.2.2.1 Original Ginna Station Design

Ginna Station was originally designed with a single station auxiliary transformer No. 12A. A single transformer was considered acceptable because it would afford the required degree of plant safety for the following reasons:

A. The plant can be safely shut down without the use of offsite power. In the unlikely event of complete loss of electrical power to the station, decay heat removal would continue to be ensured by the availability of one steam-driven and two motor-driven auxiliary feed-water pumps and steam discharge to the atmosphere via main steam safety valves and atmospheric relief valves.

B. All vital loads (safety systems, instruments, etc.) can be supplied from emergency diesel generators.

C. The diesel generators have an adequate fuel supply readily available to them (Section 9.5.4). Reserve fuel supplies are available for delivery within 8 hours.

   The two diesel generators, each capable of supplying safeguards loads, and the station auxiliary transformer provide three separate sources of power immediately available for operation of these loads. Thus the power supply system meets the single-failure criterion required of safety systems.

D. As an emergency backup to the diesel generators, should they be required to operate for an extended period during an outage of the station auxiliary transformer, power can be fed back from the 115-kV grid through the generator step-up transformer and the station unit transformer. Before power can be brought in from this source, flexible links at the generator terminals must be removed. This operation can be accomplished in about 8 hours.

E. Heat removal can be accomplished by dumping steam, in association with natural circulation, following loss of power to reactor coolant pumps.

8.2.2.2.2 Transformer Failure Rates

The use of a single station auxiliary transformer is a well-established practice in the electrical utility industry. Failure rates of transformers vary with voltage rating, type of service, maintenance, as well as various other factors; however, in discussions with various utilities, the number of recorded failures for transformers in startup service has been very low.

A survey conducted in 1966 by the Electrical System and Equipment Committee of Edison Electric Institute is further proof of this low failure rate. Briefly, the 63 utilities that took part in the survey reported 768 transformer failures during the period between January 1, 1956, and December 31, 1965. The report does not list the total number of transformers that were reviewed by the survey. However, based on an increase of 50% in installed transformer capacity in a 10-year period, and using the total of 12,170 transformers installed during the period, the annual failure rate for all types of transformers would be 0.2%. It does record the fact that 20 of the 768 failures occurred in generating stations; however, the length of time that the transformers were in service was not recorded.

This report also indicates that 319 failures were associated with transformers installed in the same 10-year period. This is an annual failure rate of 0.0026 transformer failure per transformer year for all types of services such as distribution, transmission tie, and also transformers. The actual number of failures in generating station service could be a very low number.

The Edison Electric Institute report also indicated that a very high percentage of transformer failures occur early in life, as much as 25% in the first year. Since the transformer will be energized for plant testing for about 1 year prior to plant operation, this abnormally high failure period will have been passed. If the failures in the first year are deducted from the total number, the annual failure rate would be even less than 0.0026.

8.2.2.2.3 Backup Auxiliary Transformers

Even though a single station auxiliary transformer (12A) is sufficient, an additional transformer (12B) was made available in 1977 that would provide backup for the loss of the 12A transformer. The backup transformer was connected to the 34.5-kV bus through a normally open varmaster switch, which had full capability to withstand fault currents, and a disconnecting switch. Protective relaying, independent of the station auxiliary transformer 12A, was also installed and supplied by nonsafety ac and dc power supplies.

In the event of a reactor accident, coupled with long-term unavailability of the station auxiliary transformers, the station unit transformer (11) could be used as backup to the diesel generators for providing power for long-term cooldown. This can be accomplished by disconnecting flexible links on the isolated phase bus at the generator terminals and backfeeding from the 115-kV system through the generator step-up transformer. This effort could be accomplished in a short time (6 to 8 hours)[a] after which the vital loads on the four 480-V buses could be transferred from the diesel generators.

The NRC reviewed the Ginna compliance with General Design Criterion 17 and determined that the RG&E system met current regulatory requirements. In the Safety Evaluation Report for SEP Topic VII-3, Safe Shutdown, dated April 2, 1981 (*Reference 3*), it was concluded that "this design meets the current NRC requirements for offsite power supply (General Design Criterion 17), provided that the disconnection of the main generator terminals can be accomplished within the time constraints imposed by coolant water inventory and battery life." Since Ginna Station has sufficient coolant water inventory (see Chapter 10) and the batteries were considered capable of supplying vital loads for 8 hours, which is longer than required for the terminal disconnection action to enable backfeeding, General Design Criterion 17 was considered met. Subsequent replacement of the batteries continue to meet this 8 hour requirement (*Reference 6*).

Reference 3 noted that in the event of loss of both diesel generators the offsite power supply would be subject to single failure (transformer 12A); however, the design was acceptable because of the ability to manually shift to transformer 11 within the above time constraints. During the 1987 Ginna Station MODE 6 (Refueling) outage, station auxiliary transformer

---

a. This was reviewed and found acceptable during the review of SEP Topic VIII-1.A, SER, dated January 19, 1982.

12A was out of service for maintenance and the two emergency diesel generators were supplying power. Low fuel oil levels in both emergency diesel-generator day tanks caused by partially plugged suction strainers to the diesel fuel oil transfer pumps threatened loss of both diesel generators and a station blackout.

It was concluded that although the existing offsite power system met the requirements of existing licensing commitments, it lacked sufficient operating margin when applying the single-failure criterion. Therefore, the offsite power system was reconfigured by splitting the existing 34.5-kV onsite bus and energizing both station auxiliary transformers 12A and 12B, one from each independent offsite transmission line as described in Section 8.2.1.2. Crediting either the two station auxiliary transformers or a single station auxiliary transformer and back feeding through the generator step-up transformer meets the General Design Criteria 17 requirement to have two physically independent circuits.

8.2.2.3 Radiation Exposure During Restoration of Power

Restoration of power or putting emergency or backup sources of power into operation may require access to plant areas that could be subjected to above normal radiation levels, resulting from accident conditions (e.g., the loss-of-coolant accident is the worst postulated accident) that could exist during power restoration. Entry to the station auxiliary transformer area (Nos. 11, 12A, and 12B), the generator bus area, and the diesel-generator area could be necessary or desirable to restore power. The design basis direct radiation levels at these locations for a 24-hour period following a loss-of-coolant accident, as calculated at initial plant licensing, are listed in Table 8.2-1.

Following a LOCA, radiation exposure from airborne contamination may exist. The design-basis inhalation dose rate within 200 ft of the containment, as calculated at initial plant licensing, is given in Table 8.2-2.

Radiation exposure from airborne contamination can be reduced to acceptable levels by equipping workers with breathing apparatus. Direct radiation would be the limiting source in determining the access time in designated work areas. As noted in the tabulation, direct radiation would decay very rapidly following a loss-of-coolant accident. This rapid decay of radiation following an accident would permit access to these work areas.

Results of more recent calculations are contained in Chapter 12.

REFERENCES FOR SECTION 8.2

1. Letter from K. W. Amish, RG&E, to J. F. O'Leary, AEC, Subject: Abnormal Occurrences 73-9 and 73-10 (related to a loss-of-offsite-power event), dated October 31, 1973.

2. Letter from L. D. White, Jr., RG&E, to D. L. Ziemann, NRC, Subject: Loss of Offsite Power Events at the R. E. Ginna Nuclear Power Plant, dated November 15, 1979.

3. Letter from D. M. Crutchfield, NRC, to J. E. Maier, RG&E, Subject: SEP Topics VII-3 and VIII-2 (R. E. Ginna Nuclear Power Plant), dated April 2, 1981.

4. Rochester Gas and Electric Corporation, Design Analysis EEA 09004, Rev. 0, May 4, 1991.

5. Rochester Gas and Electric Corporation, Design Analysis DA-EE-96-068-03, Offsite Power Load Flow study, Rev. 0, July 10, 1996

6. Rochester Gas and Electric Corporation, Design Analysis DA-EE-2001-028, Vital Battery 8 Hour Capacity, Rev. 0, June 28, 2001.

Table 8.2-1
DIRECT RADIATION DOSE RATES[a] (REM/HR)

Time (hr)	Station Auxiliary Transformer	Diesel Generator	Generators Bus
0	9	4.5	6.9
1	2.5	1.2	1.8
2	1.7	0.9	1.3
24	0.08	0.04	0.06

a. At listed locations following a loss-of-coolant accident.

Table 8.2-2
INHALATION DOSE RATES[a] (REM/SEC)

Time (hr)	25% of Iodine Available for Leakage is Assumed to be Present in Nonremovable Form	All Iodine is Present in Removable Form
0	0.67	0.67
1	7.1×10^{-2}	4.1×10^{-2}
2	5×10^{-2}	1.04×10^{-2}
24	0.7×10^{-2}	0.39×10^{-2}

a. Within 200 ft of containment following a loss-of-coolant accident.

Figure 8.2-1 Transmission Connections

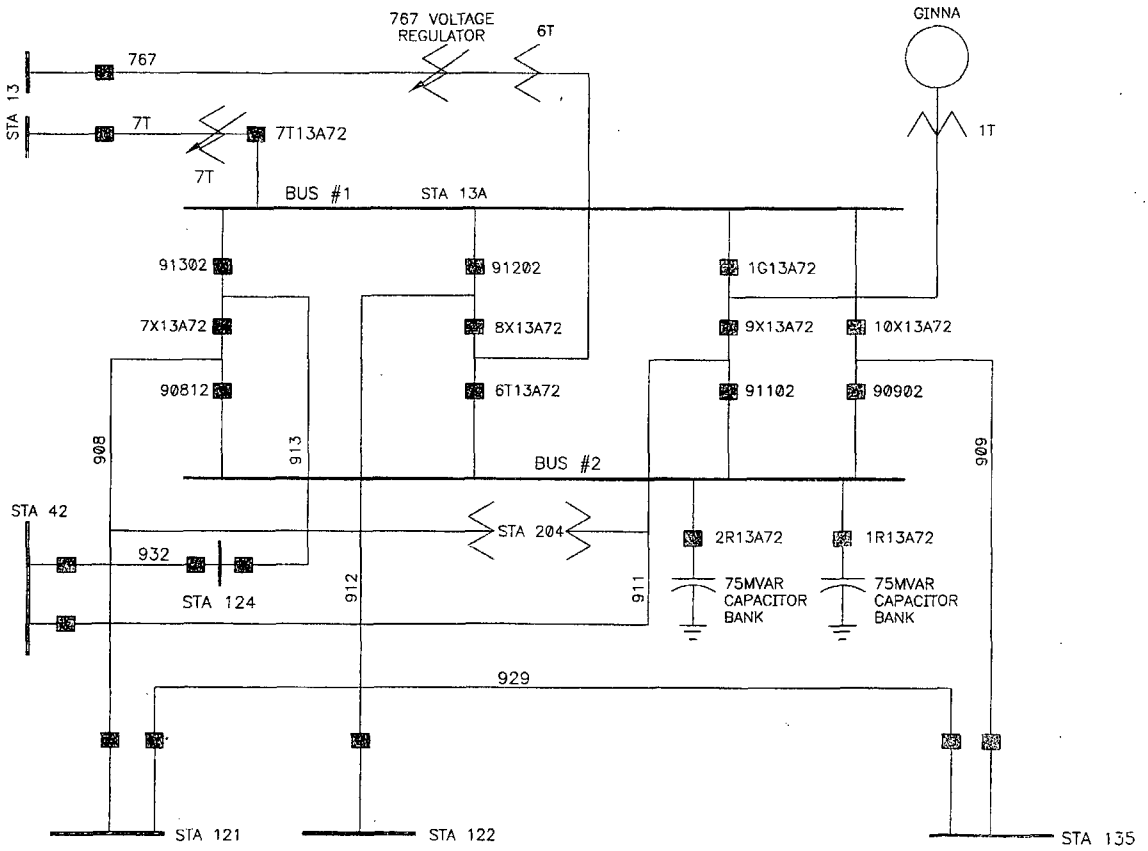

8.3 ONSITE POWER SYSTEM

8.3.1 ALTERNATING CURRENT POWER SYSTEM

8.3.1.1 Description

The electrical power system is designed to provide a simple arrangement of buses requiring the minimum of switching to restore power to a bus in the event that the normal supply to that bus is lost.

8.3.1.1.1 Single-Line Diagrams

The basic components of the alternating current portions of the station electrical system are shown in Drawings 03201-0102, 33013-0623, 33013-0652, and 33013-0653, which show the overall station system, 4160-V system, the 480-V system, and the 120-V ac instrument bus system.

8.3.1.1.2 Station Unit Transformer

The plant generator serves as the main source of auxiliary electrical power during "on-the-line" operation of the plant. Power is supplied via a 19/4.16-kV, three-winding station unit transformer that is connected to the main leads from the generator.

Auxiliary power required during plant startup, shutdown, and after reactor trip is supplied from the 34.5-kV system. After reactor or turbine generator trip, the necessary auxiliaries on the 4160-V buses are transferred by a fast bus transfer scheme using stored energy breakers from the station unit transformer to the station auxiliary transformer(s). Control power for the breakers is obtained from the station batteries. The 34.5-kV switchyard is served by two separate sources. Both sources come directly from the Rochester Gas and Electric Corporation (RG&E) >115-kV system through step-down transformers. Incoming lines to the 115-kV substation, other than the tie to the plant generator step-up transformer, consist of **five** lines from the RG&E transmission network. The 34.5-kV system is also the normal supply for the auxiliary load associated with plant engineered safeguards.

Three auxiliary transformers provide all the electrical power requirements for the onsite loads at Ginna Station. The station auxiliary transformers 12A and 12B, are described in Section 8.2 and represent two of the three auxiliary transformers. The 12A and 12B transformers are double secondary transformers and one or both are connected to two 4160-V buses, 12A and 12B. The station unit transformer (No. 11) is also a three-winding transformer identical in capacity to the No. 12 transformers and is directly connected to the isolated phase bus. The voltage rating is 19 kV to 4160 V and has a 150-kV basic impulse level on the 19 kV winding. The station unit transformer is connected on the secondary side to two non-Class 1E 4160-V buses, 11A and 11B.

The primary purpose of transformer 11 is to supply normal station auxiliary loads while the main generator is connected to the 115-kV grid. The same conservatism is applied to the station unit transformer as to the station auxiliary transformers in that it can carry all auxiliaries within 90% of its forced-air rating at 55°C; however, its normal load is considerably higher than that of the No. 12 transformers.

When off-line or during startup, all onsite power is supplied from the offsite 34.5-kV system through transformer 12A, 12B, or 12A and 12B. The four 4160-V buses are arranged as shown in Drawings 33013-0623, sheet 1 and Drawing 33013-0653. Bus 11A is fed from transformer 12A and bus 11B is fed from transformer 12B through bus tie breakers. Once the main generator is synchronized to the grid, the bus ties are opened at about 5% power, isolating buses 11A and 11B from 12A and 12B. Buses 11A and 11B supply all non-safety-related loads while buses 12A and 12B remain energized from the offsite system and supply safety-related and non safety related loads on the 480-V safeguards buses through station service transformers. After a reactor or turbine generator trip, the necessary auxiliaries on the 4160-V buses are transferred by a fast bus transfer scheme using stored energy breakers from the station unit transformer to the station auxiliary (12A and 12B) transformers. The station auxiliary transformers are served by two independent sources: one line through a tie to the RG&E 115-kV switchyard via stepdown transformer 7 (circuit 7T)is connected to transformer 12A and a second line through a tie to the RG&E 115-kV switchyard via step-down transformer 6 (circuit 767) is connected to transformer 12B.

8.3.1.1.3 The 4160-Volt System

The 4160-V system (Drawing 33013-0653) consists of four buses that are classified as non-Class 1E. The system is formed by four sets of Westinghouse metal-clad switchgear, which use DH type air circuit breakers. Discrete relaying is used to afford overcurrent, undervoltage, and underfrequency protection as required. The two buses connected to the No. 11 transformer supply all normal plant auxiliary loads (non-Class 1E) and are designated 11A and 11B. The two buses connected to the offsite system through transformers 12A and 12B supply all the startup power and also feed the Class 1E loads on the 480-V safeguards system through four station service transformers.

Buses 11A and 11B are connected to the generator leads via bus main breakers and the station unit transformer. Buses 11A and 12A or buses 11B and 12B can be tied together via bus tie breakers. When off-line, a tie breaker is also supplied between buses 11A and 11B, which may be closed under administrative control so as to perform certain maintenance activities. All 4160-V auxiliaries except condensate booster pump 1A are split between buses 11A and 11B. In addition, buses 11A and 11B each serve one 4160/480-V station service transformer. Buses 12A and 12B each serve two 4160/480-V station service transformers. Bus 12A also feeds condensate booster pump 1A.

Buses 11A and 11B are provided with solid-state underfrequency relays and undervoltage relays to provide protection against a loss-of-flow transient. The underfrequency relays are set to give a reactor trip before decreasing bus frequency can degrade primary system flow below the level assumed in the steady-state or transient analyses (Section 15.3). The setpoint information is described in Section 8.2.2.

8.3.1.1.4 The 480-Volt System

8.3.1.1.4.1 480-Volt Buses

The 480-V system (Drawing 33013-0652) is divided into six buses. Each bus is supplied by a separate 4160/480-V station service transformer. The 480-V buses are supplied from the

4160-V buses as follows: buses 14 and 18 from bus 12A, 16 and 17 from 12B, 13 from 11A, and 15 from 11B. Tie breakers are provided between 480-V buses 14 and 13, buses 16 and 14, buses 16 and 15, and buses 17 and 18.

The buses are formed by Westinghouse load centers using DB type air circuit breakers. The breakers are protected by overcurrent devices. They were each originally equipped with three single-phase series trip thermal/mechanical direct acting devices. These overcurrent devices were upgraded by replacing the three single-phase devices with one, three-phase solid-state device referred to as an Amptector. The Amptector design has been superseded by the Westinghouse Westector, which is equivalent in fit and fuction to the Amptector design. New and replacement overcurrent devices are now Westector units. The solid-state device detects fault currents and overloads and directly trips the circuit breaker mechanically. Tripping energy is derived from the load current flowing through sensors so that no separate power source is required. The assembly is mounted on the breaker and consists of sensors, a solid-state trip unit, actuator, and discriminator. The solid-state overcurrent trip devices are set so as to be coordinated with associated breakers, which include the 4160-V buses and motor control centers. Coordination ensures that the correct device clears the fault or overload and that no other device operates except where necessary to afford backup protection. The devices used on buses 14, 16, 17, and 18 are Class 1E. Those used on buses 13 and 15 are non-Class 1E. All Class 1E assemblies are qualified to IEEE 344-1975 thus ensuring operability during a safe shutdown earthquake.

8.3.1.1.4.2 Class 1E Trains

Two Class 1E independent trains provide the necessary redundancy on the 480-V safeguards system. Train A consists of 480-V safeguards buses 14 and 18, while train B consists of safeguards buses 16 and 17. Buses 14 and 16 are located in the auxiliary building, while 17 and 18 are located in the screen house.

A bus tie between the two inplant Class 1E 480-V safeguards buses 14 and 16 can be used for maintenance purposes. This tie consists of a breaker in each bus, one manually operated and the other electrically operated.

The bus tie control scheme is discussed in Section 7.3.1.2.

Each safeguards bus has two undervoltage channels. Each channel has a type 27N relay to detect a complete loss of voltage and a type 27 relay to detect abnormally low voltage. One out of two relays is required to activate the channel. Activation of either channel will give an undervoltage protection system alarm. Activation of both channels will result in bus load shedding and an associated diesel generator start and bus connection.

In the event of a loss of offsite power, or abnormal offsite power, the diesel generators are started concurrent with load shedding. When the diesel generators come up to speed and close onto the buses, the undervoltage relays reset, thus allowing the operator to manually load any of the motors that are required. Some loads may also be automatically loaded onto the bus. The automatic load sequencer is not activated unless a safety injection signal is present.

The failure of a 125-V dc/120-V ac inverter coincident with an undervoltage condition or the loss of offsite power was examined for impact on the undervoltage protection system functionality. This failure scenario was less limiting than the single failure of a diesel generator to start. As a result of the analysis, the undervoltage protection system design was modified for buses 14, 16, 17, and 18 to provide power to the undervoltage control cabinets from the 125-V dc battery system instead of from the 120-V ac system and inverter. The modified undervoltage protection system design functionality is not impaired by a postulated coincident inverter/loss of offsite power failure condition.

In the event of a station service failure or degraded voltage resulting in the loss of one 480-V safeguards bus, the diesel generator associated with that train will get a start command. Once up to speed, the diesel-generator breaker on that bus only will close restoring rated voltage. Should the same event occur concurrent with a safety injection signal, the other bus on that train will be tripped by the undervoltage relay on the failed bus. This condition will actuate the load sequencer on that train and Class 1E loads will be brought into service in a preprogrammed fashion. The other train, not experiencing undervoltage, will program into service only those loads that are not already in service. That is, no load shedding of engineered safety features actuation system (ESFAS) will occur.

8.3.1.1.5 The 120-Volt Alternating Current System

The 120-V ac instrument supply (Drawing 03201-0102) is split into four buses that are capable of being supplied by multiple sources. Each bus is supplied by a pair of mechanically interlocked breakers such that paralleling of redundant sources is prevented.

Two of the buses are fed by inverters which are in turn supplied from separate 125-V dc buses. The other two buses are supplied by constant voltage transformers connected to separate 480-V buses. Instrument buses 1A and 1C have two power sources, with automatic transfer from the primary to backup supply. Instrument Buses 1A, 1B, and 1C provide power to vital plant instrumentation. All three buses are backed up by safety-related emergency supplies; bus 1A from battery 1A and diesel generator 1A; bus 1B from diesel generator 1A; and bus 1C from battery 1B and diesel generator 1B. Instrument bus loads are shown in Drawing 03201-0102.

In addition to the four instrument buses, one channel each of containment wide range pressure and steam generator B pressure instrumentation (P950 and P479) are fed from a separate inverter (MQ-483), which is supplied from 125-V dc battery 1A. See Section 8.3.2.1.

8.3.1.1.5.1 Instrument Bus 1A

Instrument bus 1A is normally supplied from Class 1E 125-V dc distribution system train "A" through inverter A. The backup supply is the Class 1E 480-V ac bus 14 MCC-1C through a regulating transformer. When the normal supply fails, a static switch automatically switches to the backup supply. When the normal supply returns, the static switch is manually switched back to the normal supply. The automatic transfer switch is initiated by any of the following: inverter failure, overcurrent beyond the static switch, inverter output undervoltage, manual operation, or a failure of the static switch. When inverter or static switch maintenance is required, instrument bus 1A can be manually switched to the maintenance supply, which is

supplied from non-Class 1E bus 13 MCC-1A and a regulating transformer, by operating a mechanically interlocked breaker at the instrument bus 1A distribution panel in the main control room.

Several local alarms on the inverter feed a common alarm which annunciates on the main control board, directing operators to check the instrument bus inverters. There are two ac voltmeters and a frequency meter located on the 1A instrument bus distribution panel that indicate the 1A inverter output voltage and frequency and the 1A instrument bus output voltage. A main control board alarm will annunciate if the 1A instrument bus voltage drops below 105 V ac.

8.3.1.1.5.2 Instrument Bus 1B

Instrument bus 1B is normally supplied from Class 1E bus 14 MCC-1C and a regulating transformer. The backup supply for instrument bus 1B is supplied from non-Class 1E bus 13 MCC-1A and a regulating transformer. Operator action is required to switch to the backup supply by operating a mechanically interlocked breaker at the instrument bus 1B distribution panel located in the main control room. There is an ac voltmeter located on the 1B instrument bus distribution panel which indicates the 1B bus voltage. A main control board alarm will annunciate if the 1B instrument bus voltage drops below 105 V ac.

8.3.1.1.5.3 Instrument Bus 1C

Instrument bus 1C is normally supplied from Class 1E 125-V dc distribution system train "B" through inverter B. The backup supply is the Class 1E 480-V ac bus 16 MCC-1D through a regulating transformer. When the normal supply fails, a static switch automatically switches to the backup supply. When the normal supply returns, the static switch is manually switched back to the normal supply. The automatic transfer switch is initiated by any of the following: inverter failure, overcurrent beyond the static switch, inverter output undervoltage, manual operation, or a failure of the static switch. When inverter or static switch maintenance is required, instrument bus 1C can be manually switched to the maintenance supply, which is supplied from non-Class 1E bus 13 MCC-1A and a regulating transformer, by operating a mechanically interlocked breaker at the instrument bus 1C distribution panel in the main control room.

Several local alarms on the inverter feed a common alarm which annunciates on the main control board, directing operators to check the instrument bus inverters. There are two ac voltmeters and a frequency meter located on the 1C instrument bus distribution panel that indicate the 1C inverter output voltage and frequency and the 1C instrument bus output voltage. A main control board alarm will annunciate if the 1C instrument bus voltage drops below 105 V ac.

8.3.1.1.5.4 Instrument Bus 1D

Instrument bus 1D is normally supplied from non-Class 1E bus 15 MCC-1B via a regulating transformer. The backup supply for instrument bus 1D is supplied from bus 13 MCC-1A via a regulating transformer. Operator action is required to switch to the backup supply by operating a mechanically interlocked breaker at instrument bus 1D distribution panel located in

the main control room. There is an ac voltmeter located on the 1D instrument bus distribution panel that indicates the 1D bus voltage. A main control board alarm will annunciate if the 1D instrument bus voltage drops below 105 V ac.

Critical channel D instruments (one channel each of containment wide-range pressure and steam generator B pressure instrumentation [P950 and P479]) are fed from class 1E inverter MQ-483, which is supplied from battery 1A.

8.3.1.1.6 Emergency Power

8.3.1.1.6.1 Emergency Power Sources

The first source of emergency power is the 34.5/4.16-kV station auxiliary transformers. As described in Section 8.2.1.2, each of the two transformers has an independent supply. One is circuit 767 from 115/34.5-kV transformer 6 at RG&E station 13A and the second is circuit 7T from 115-kV/34.5-kV transformer 7 at RG&E Station 13A. The routing is entirely independent of the main transmission right-of-way.

If the 34.5-kV sources and/or the 12A and 12B transformers should fail, the next source of emergency power is the two diesel-generator sets. Each set consists of an Alco model 16-251-F engine coupled to a Westinghouse 1950-kW (continuous rating), 0.8 power factor, 900 rpm, three-phase, 60-cycle, 480-V generator. The diesel-generator units have extended ratings of 2300 kW for 0.5 hours and 2250 kW for 2 succeeding hours.

Each unit, as a backup to the normal standby ac power supply, is capable of sequentially starting and supplying the power requirement of one complete set of engineered safety features equipment. The units are located in separate rooms in a Seismic Category I structure located outside the northeast wall of the turbine building.

8.3.1.1.6.2 Diesel-Generator Rapid Startup and Loading

Each diesel generator is automatically started by an air motor. Each unit has a complete 40-ft^3 air storage capacity (two 20-ft^3 tanks each) and compressor system powered from the 480-V emergency bus. The piping and the electrical services are arranged so that manual transfer between units is possible. Each unit has the air storage capacity required to ensure that the available diesel cranking time is sufficient for five diesel starts without recharging the air receivers. The unit is capable of being started and supplying one-third load after 10 sec. It can be fully loaded 30 sec after the initial starting signal. The starting system is completely redundant for each diesel generator.

To ensure rapid start, the units are equipped with water jacket and lube-oil heating and pre-lube pump for circulation of lube oil when the unit is not running. The units are located in heated rooms.

An audible and visual alarm system is located in the main control room and will alarm abnormal conditions of jacket water temperature, lube-oil temperature, fuel-oil level, and starting air pressure.

8.3.1.1.6.3 Diesel-Generator Protective Trips

The protective trips and conditions that render the diesel generators incapable of responding to an automatic start signal are the following:

- Low lube-oil pressure (40 psig; two-out-of-three logic).
- Overcrank.
- Reverse power (if safety injection signal not present).
- Overcurrent (if safety injection signal not present).
- Overspeed.
- Control switch in PULL-STOP.
- Local/remote switch in LOCAL.

The reverse power and overcurrent protective trips are automatically bypassed upon receipt of a safety injection actuation signal. Since the low lube-oil pressure trip uses redundant sensors and coincident logic, the diesel generator protective trips meet the requirements of Branch Technical Position ICSB-17. (*References 1*, *2* and *3*)

All instrument tubing and instruments required for diesel generator operation are Seismic Category I. These instruments include lube oil pressure, jacket water pressure, and fuel oil pressure switches.

The Technical Specifications require that the generator be periodically tested to verify the capability to reject a load of 295-kW without tripping due to overspeed.

An overspeed condition would cause generator damage and therefore the diesel generator should be shut down for corrective action to be taken to restore the generator output to normal.

A shutdown of the diesel generator is indicated in the control room by an audible alarm on the control board and by the generator bus voltmeter.

Normal oil pressure is about 85 psi; the emergency diesel-generator audible alarm sounds at 60 psi. Low oil pressure shutdown is initiated when two-out-of-three oil pressure switches operate at 40 psi. Since the engine cannot run without proper lubrication, shutdown permits corrective action to be taken before the engine is damaged and the diesel generator can then be returned to service.

8.3.1.1.6.4 Fuel Oil Supply

An onsite diesel-generator fuel oil inventory is maintained to support operation of both diesel generators. Information on diesel fuel oil, including storage locations and tank capacities, is found in Section 9.5.4. Fuel oil storage and sampling requirements are in the Technical Specifications.

8.3.1.1.6.5 Diesel-Generator Startup Logic

The diesel-generator units are given a starting signal any time there is an abnormal voltage condition, and also when a safety injection signal is initiated. The logic diagram for the diesel-generator startup is shown in Drawing 33013-1353, Sheet 5. The index of logic symbols is shown in Drawing 33013-1353, Sheet 1.

The units have demonstrated that they are capable of coming up to speed and voltage, ready to accept load, in 10 sec. They have also demonstrated the capability of accepting blocks of loads; however, to keep voltage dips to a minimum, loads are sequenced onto their buses using programmed time increments of 5 to 7 sec.

8.3.1.1.6.6 Emergency Power Supply

During MODES 1 and 2, and normal shutdown, the diesels are in a standby condition. Diesel generator 1A is available to supply buses 14 and 18, and diesel generator 1B is available to supply buses 16 and 17. Each diesel-generator set is automatically started and placed on line upon undervoltage (without a safety injection signal) on one of the 480-V buses associated with the set. The undervoltage protection system is designed with two channels per bus. With an undervoltage signal on both channels of a particular bus, the associated diesel generator starts and loads onto the affected bus. An undervoltage signal on a single channel will give an undervoltage protection system alarm but will not start the diesel generator. The automatic actuation upon undervoltage conditions on a safeguards bus is as follows:

a. All motor feeder breakers, the main supply, and the tie breakers to non-safety-related buses that are on the affected bus are tripped. Exceptions to this are the component cooling pumps, which require both undervoltage conditions and a safety injection signal to trip, and the containment spray pumps and motor control centers 1C and 1D, which require a manual trip.

b. The diesel generator is started.

c. After the unit comes up to speed and voltage, the emergency generator breaker closes. The electrically driven auxiliary feedwater pump is loaded onto the bus when a start signal is present. The component cooling pump and motor control centers remain connected and are operational as soon as power is restored. The service water pumps have timed delays before being added to the diesel so as not to add to the starting load. Other equipment must be manually started as automatic load sequencing does not occur on undervoltage alone.

If there is a requirement for engineered safety features operation (i.e., the initiation of a safety injection signal) coincident with undervoltage on the 480-V bus, the sequential starting of engineered safety features equipment is as shown in Table 8.3-1 and in Drawing 33013-1353, Sheet 8.

Starting of containment spray pumps, if initiated by high containment pressure, is accomplished simultaneously with any of the steps shown in Table 8.3-1.

The motor control centers once energized remain tied to their respective buses and are not shed (tripped) during undervoltage. The injection valves are automatically opened at the same time as the respective pumps are started.

Tie breakers exist between buses 14 and 16 and buses 17 and 18 (see Drawing 33013-0623, Sheets 1 and 2). The tie between buses 14 and 16 consists of a breaker in each bus, one manually operated and the other electrically operated. The tie between buses 17 and 18 consists of a single electrically operated breaker. This feature is used when the plant is in MODE 5 (Cold Shutdown) for maintenance. Technical Specifications require that the tie breakers between buses 14 and 16 and buses 17 and 18 remain open when the plant is above MODE 5 (Cold Shutdown) conditions. Closure of either the electrically operated tie breaker between buses 14 and 16 or the breaker between 17 and 18 is annunciated in the control room.

The electrically operated bus tie breaker between buses 14 and 16 can only be closed if either bus 14 or 16 is deenergized. The diesel generator and normal supply breakers on buses 14 and 16 will not close if the electrically operated tie breaker is closed. The electrically operated bus tie breaker is automatically tripped on safety injection and/or undervoltage conditions.

Above MODE 5 (Cold Shutdown), the tie breaker for buses 17 and 18 is maintained in the test position, which prevents electrical or mechanical closure. Below MODE 5 (Cold Shutdown), when the breaker is racked in, the control scheme allows the bus tie breaker to be closed only if either bus 17 or 18 is deenergized. The diesel generator and normal supply breakers on buses 17 and 18 will not close if the tie breaker is closed. The tie breaker is automatically tripped on safety injection and/or undervoltage conditions.

The breakers cannot be closed when a safety injection signal is present. The Ginna Station design utilizes a safety injection signal reset function that requires both completion of engineered safety features sequencing and administrative controls prior to manual reset.

In the June 16, 1994, Safety Evaluation Report, the NRC evaluated the appropriateness of using the tie breaker for buses 17 and 18 (52/BT 17-18) at Ginna Station during the recirculation phase of a design-basis accident. Specifically, given the worst-case design-basis accident (loss-of-coolant accident with loss of offsite power) and failure of one emergency diesel generator, the cross-ties between the two redundant Class 1E 480-V safeguards buses could be utilized such that two service water pumps could be powered by one diesel generator. The NRC determined that adequate time limitations and surveillance requirements exist at Ginna Station for the proper use of the tie breakers on occurrence of loss of offsite power and failure of one emergency diesel generator, and that these actions are consistent with the guidance provided in Generic Letter 91-11. The NRC concluded that pending completion of their evaluation of analyses submitted by RG&E supporting single service water pump operation in the recirculation phase (see Section 9.2.1.4.1), the compensatory measure of using the bus tie breaker for buses 17 and 18 during the recirculation phase of a design-basis accident is acceptable.

The issue regarding single service water pump operation during loss-of-coolant accident (LOCA) recirculation has since been resolved. See Section 9.2.1.4.1. The option to use the bus tie breaker to supply a second service water pump from a single emergency diesel generator is retained, following appropriate evaluation by Technical Support Center staff.

Should any of the feeder breakers associated with the above safeguards components or the 480-V bus tie breaker trip due to overload, they can be reclosed from the control room. The

emergency generator overload trip is blocked when there is a safety injection signal. Overload trip elements on the reversing starters associated with the various motor-operated valves can be reset at the motor control centers.

Diesel generator 1B has two series circuit breakers feeding bus 17. This arrangement reduces the likelihood **of a loss of both diesel generators in** an event (such as fire or tornado) **that affects** the screen house in such a way as to simultaneously fault both buses 17 and 18 **and their feeder cables.**

Either diesel-generator unit is capable of supplying all power required by a full set of engineered safety features; therefore, failure of either one can be tolerated.

8.3.1.1.6.7 Alternative Shutdown Provisions

In response to the requirements of Appendix R to 10 CFR 50, an alternative shutdown system was installed at Ginna Station. This system provides isolation of control circuits in the 1A diesel-generator room and also provides sufficient control features so as to allow local control of the 1A diesel generator. The isolation of control and control power circuits outside the 1A diesel-generator room ensures that fire damage in other fire areas cannot inhibit proper diesel control and operation. In addition, alternative controls and instrumentation in the 1A diesel-generator room could start up and ensure continued operation of the diesel generator during and following certain fires, including a fire that results in complete evacuation of the control room. This ensures availability of an onsite Class 1E 480-V safeguards ac source for safe shutdown of the plant.

8.3.1.1.6.8 Regulatory Review of Diesel-Generator Capability

A regulatory review of the onsite diesel-generator capability at Ginna Station was conducted pursuant to the NRC Systematic Evaluation Program (SEP). It was determined that the maximum automatically connected load to either generator was 1995 kW and the maximum long-term automatically connected load was 1517 kW, both of which are well within the corresponding generator ratings of 2300 kW (30-minute rating), 2250 kW (2 hour rating), and 1950 kW (continuous rating).(*Reference 3*) Recent analyses (*References 24* and *25*) provided similar results of 1982 kW and 1664 kW respectively for automatically connected loads. Therefore, the total automatically connected load is within the criteria of Regulatory Guide 1.9 (*Reference 4*).

8.3.1.2 Analysis

8.3.1.2.1 Evaluation of Layout and Load Distribution

The physical locations of electrical distribution system equipment is such as to minimize vulnerability of vital circuits to physical damage as a result of accidents.

Routing and separation standards applicable to existing cables are those that were invoked at the time of cable installation. For more information, see Section 8.3.1.4.

The redundant onsite ac power trains have no automatic transfers of loads and/or load groups, except safety injection pump 1C and its fan will transfer automatically to bus 16 after a time

delay if not loaded onto bus 14 when a safety injection signal is present. The manual transfer of load groups or manual inter-connection of emergency buses have interlocks to prevent inadvertent paralleling of redundant sources.

8.3.1.2.2 Diesel Generators

Each diesel generator is sized to start and carry the engineered safety features required during worst case accident loading conditions. These loads are shown in Drawing 33013-0652 and tabulated in **Tables 8.3-2a and 8.3-2b**.

8.3.1.2.3 Normal Power Sources

In the event that normal power should be available for actuation of Emergency Core Cooling System (ECCS) components, the magnitudes and starting sequence of the engineered safety feature loads are the same as stated for the diesel generator. The time required for loading is shorter. Normal power sources may be loaded immediately so that first loading may be energized 10 sec sooner than can be accomplished in loading of the diesel generator.

8.3.1.2.4 Reliability Assurance

8.3.1.2.4.1 Redundancy

The electrical system equipment is arranged so that no single contingency can inactivate enough engineered safety features equipment to jeopardize the plant safety. The 480-V engineered safety features equipment is arranged on four buses.

Two independent offsite power sources are available to supply the engineered safety features equipment. These offsite sources each feed an independent station auxiliary transformer. See Figure 8.1-1. Offsite circuit **7T** feeds transformer 12A. Offsite circuit **767** feeds transformer 12B. Each transformer is capable of supplying all plant engineered safety features equipment. Breakers 12AX, 12AY, 12BX, and 12BY (see Figure 8.1-1) permit the station auxiliary transformers to be lined up so that transformer 12A supplies one engineered safeguards bus and transformer 12B supplies the other (50/50 mode), transformer 12A supplies both safeguards buses (0/100 mode), or transformer 12B supplies both safeguards buses (100/0 mode). The 50/50 mode is the normal configuration.

The plant auxiliary equipment is arranged electrically so that multiple items receive their power from the two different sources. The charging pumps are supplied from the 480-V buses 14 and 16. The four service water pumps are divided between 480-V buses 17 and 18. The four containment fans are divided between 480-V buses 14 and 16. The two residual heat removal pumps are on separate 480-V emergency buses 14 and 16. Valves are supplied from motor control centers.

8.3.1.2.4.2 Sequencing Circuits

Refer to Table 8.3-1 for the engineered safety features automatic actuation sequence and times after the initiation signal for the cases when the normal power source is available and when only the diesel generator power source is available.

The components of the sequencing circuits are control relays and electro-pneumatic timing relays. One control relay or one timing relay is used to close each circuit breaker feeding 480-V three-phase power to the engineered safety features components. The control power for the relays is supplied from the station batteries. Battery 1A supplies the sequencing circuits for safeguards actuation train A, while battery 1B supplies the sequencing circuits for safeguards actuation train B. The sequencing circuits for the two safeguards actuation trains are located in separate safeguards actuation relay racks in the relay room.

When there is voltage on the associated 480-V safeguards buses (see Drawing 33013-0652), closure of the master safety injection relay contact initiates the safeguards sequencing circuit by energizing one control relay and seven timing relays. In train A, the control relay immediately closes the circuit breaker 52/SIP1A to energize safety injection pump 1A. After a 5-sec time delay, the first timing relay times out and closes its contact to close circuit breaker 52/SIP1C2, starting safety injection pump 1C. The second timing relay times out after 10 sec to close circuit breaker 52/RHRP1A and start residual heat removal pump 1A. In the same manner, each of the remaining five timing relays times out, with a 5-sec interval between each relay, closing the circuit breakers for one service water pump, two containment air recirculating fans, and an auxiliary feedwater pump.

The sequencing circuit for train B is similar to that described above for train A. Safety injection pump breaker 52/SIP1B is closed instantaneously to start safety injection pump 1B. After a 7-sec time delay, the contact of the first timing relay times out to close circuit breaker 52/SIP1C1 to start safety injection pump 1C. The next time delay relay times out 12 sec after the initiating signal to close circuit breaker 52/RHRP1B and start residual heat removal pump 1B. The remaining timing relays time out at 5-sec intervals to start one service water pump, two containment air recirculating fans, and an auxiliary feedwater pump.

8.3.1.2.4.3 Sequencing Relays

The sequencing relays all begin timing at the instant the circuit is energized. Each relay times out independently. Therefore, if a timing relay fails to operate, the circuit breaker operated by that relay will not close and the associated component will not start. However, the sequence is not interrupted and the remaining components will be started.

The reliability of the Agastat timing relays has been proven by operating experience in many applications and by reliability tests. Operability is further ensured by calibrations and system testing during each MODE 6 (Refueling) outage.

An analytical design bases has been established for the setpoints associated with the time delay relays used at Ginna Station. Agastat timers that require replacement use the setpoints determined by the design analyses to ensure proper system operation. Replacement Agastat timers must provide the necessary time delay signals consistent with the functional requirements for each system. Each relay application is analyzed to determine the following three tolerances or ranges:

a. The system "functional operating range" is the range within which the relay is required to operate for the system to meet its designed operating requirements. The relay setpoints plus all calibration tolerances must fall within the system operating range.

b. "Calibration tolerance" defines the range within which the relay is expected to fall when checked during periodic testing and calibration. If the setpoint is found outside of this range, it must be recalibrated and the frequency of testing may be increased to ensure it stays within this range.

c. The "Acceptable Drift" is the range in which the relay's setpoints is allowed to drift without exceeding the relay's design limits. This range will be used as acceptance criteria for all Agastat relays; however, the required operating range will still be the calibration tolerance discussed above.

Replacement relays are tested for proper setpoints and operation following installation using plant calibration and test procedures. Both Class 1E and non-Class 1E relays are evaluated to ensure that the relay setpoints provide the required performance.

If the sequence has started and 480-V power on the safeguards buses is interrupted, the circuit breakers will be tripped and the sequencing relays will be deenergized by contacts of the 480-V bus undervoltage relays. The timing relays reset instantaneously. When 480-V power is restored, the 480-V bus undervoltage relays energize the sequencing circuit and the sequence is repeated from the beginning.

8.3.1.2.4.4 Engineered Safety Features Actuation

The Engineered Safety Features Actuation System (ESFAS) at Ginna Station consists of control relays, electro-pneumatic timers, and a series of electrical and mechanical interlocks on each train. In general, Class 1E equipment is loaded on the safeguards buses at approximately 5-sec intervals. The only exception is the 1C safety injection pump, which is a "swing" pump and may be fed from either breaker 52/SIP1C2 (bus 14, train A) or breaker 52/SIP1C1 (bus 16, train B). Bus 14 has been designated as the preferred source for the 1C safety injection pump motor. To prevent closure of both circuit breakers, causing buses 14 and 16 to be paralleled, a network of interlocks is used.

a. Circuit breakers 52/SIP1C1 and 52/SIP1C2 are electrically interlocked such that if one breaker is closed, the closing coil of the other breaker cannot be energized.

b. The time delay relays, associated with the 1C SIP breakers, on the train A and B sequencers are interlocked using timed delayed contacts. This ensures that only one SIP-1C breaker is given a closed command. In addition, a control feature exists that initiates a transfer from bus 14 to bus 16 should the 52/SIP1C2 fail to close for any reason except an electrical fault. In the event of an electrical fault on the 1C motor, the transfer is blocked, after closure onto bus 14 fails, thus ensuring that both safety trains are not subject to a common fault.

8.3.1.2.4.5 Separation

The power feed from the diesel generators is run by a separate route so that if the tunnel were lost, power to the engineered safety features would still be provided.

One outside source of power is required to give sufficient power to run normal operating equipment. One transmission line can supply all the plant auxiliary power. The 115-kV/34.5-kV station transformer 6 or transformer 7 can supply all the auxiliary loads.

8.3.1.2.4.6 Fuse Coordination

The sizing of pairs of individual circuit fuses in the plant are coordinated with source-side fuses so as to provide selective blowing. In some cases, a minimum size ratio of 2 to 1 between the source-side fuse and the load-side fuse exists. With this sizing ratio, the load-side fuse will clear the circuit for any condition of fault or overload without blowing the source-side fuse. Fuses are used to provide isolation of non-Class 1E dc loads fed from the two Class 1E battery systems. Therefore, all faults will clear before causing a bus outage. The 480-V switchgear has automatic transfer of dc control power to an emergency supply from the redundant train. Fuse coordination eliminates a common-mode failure mechanism by preventing a single postulated event (automatic transfer of dc control power into a fault) from interrupting dc control power to redundant buses.

8.3.1.2.4.7 Overload and Short Circuit Protection

All ac motors whether continuous or intermittent duty have both overload and short circuit protection. These protective devices are sized and coordinated in order to achieve full short circuit protection and maximize system operability. Any instantaneous tripping is set to operate at a minimum of 1.73 times the locked rotor current. Motor-operated valves required to operate during or after a loss-of-coolant accident are equipped with a safety injection bypass of any thermal overload relay and/or the overload heater is sized to account for uncertainties in favor of completing safety-related action. The bypass is activated on receipt of a safety injection signal and remains activated until safety injection is reset. The short circuit protection is not bypassed. This ensures operation of the motor-operated valves required to operate during a safety injection signal in the event of abnormal current levels less than 1.73 times locked-rotor current. This is in compliance with Regulatory Guide 1.106.

8.3.1.2.5 Instrument Bus Evaluation

Instrument buses 1A, 1B, 1C, and 1D provide 120-V ac power to instrumentation and controls which are used to monitor and actuate systems important to the safety of the plant. The instrument buses meet the single failure criteria of IEEE Standard 379-1972. The inverters and static switches for instrument buses 1A and 1C meet the separation criteria of IEEE Standard 384-1974.

The inverter, regulating transformer, and static switch combination provides an uninterruptible supply to instrument buses 1A and 1C. Static bypass switches are solid-state devices using semiconductors for the switching element. Maximum transfer time, including sensing time, is 1/4 cycle. Therefore, static switch spurious trips will not affect the devices connected to instrument bus 1A or 1C because power to the instrument bus will not be interrupted. The backup supplies (bus 14 or 16) will be available unless the plant is already shut down. If the plant is shut down and a static switch spurious trip occurs on one bus, the other bus will still remain in operation.

Static switch transfer is initiated by inverter failure, overcurrent beyond the static switch, inverter output undervoltage, or manual pushbutton. A failure in the static switch itself will also cause automatic transfer of the load to the backup supply.

Transfer of instrument bus 1A and 1C loads without interruption will reduce the number of unnecessary plant trips and the associated transients resulting from failures in the inverter feed supply. A complete failure or loss of power from both the backup and normal supplies will place in trip mode those controls fed from the instrument bus and will normally produce a plant trip. The only monitoring instrumentation which would be lost is that associated with the single deenergized instrument bus.

The backup supply from bus 14 for instrument bus 1A and the backup supply from bus 16 for instrument bus 1C improves the reliability of both instrument buses. The backup supply cables to the constant voltage transformers meet the separation requirements of IEEE 384-1974.

A single regulated supply from nonsafeguards bus 13 provides the maintenance supply to instrument buses 1A, 1B, 1C, and 1D. The maintenance supply transfer switches are used as isolation devices, as defined by IEEE Standard 384-1974. The necessary separation between redundant Class 1E systems and between Class 1E systems and associated systems is accomplished with the maintenance supply transfer switches for each instrument bus.

The two 7.5-kVA single-phase circuits from instrument buses 1A and 1C affect safeguards buses 14 and 16, respectively. One circuit from bus 14 is required to supply instrument bus 1A backup when the normal supply fails and during maintenance of the normal supply. One circuit from bus 16 is required to supply instrument bus 1C backup when the normal supply fails and during maintenance of the normal supply. With the additional load, the total engineered safety features load (**Tables 8.3-2a and 8.3-2b**) remains below the rated load capacity of each diesel generator for all phases of operation.

8.3.1.2.6 Loss of Offsite Power Under Accident Conditions

8.3.1.2.6.1 Operator Actions

In the event of a loss-of-coolant accident (which is considered the worst-case condition) and with an outage of the station auxiliary transformers, it can be shown that the plant can be maintained in a safe shutdown condition by operating the diesel generators to supply vital loads. During other types of accidents, e.g., loss of flow or steam line break, cooldown can be accomplished by dumping steam in conjunction with flow coastdown and natural circulation. Operator actions to be taken under accident conditions and with the station auxiliary transformers out of service are described below. These conditions assume that the diesel generators have already received a start signal and are up to speed and rated voltage.

Shutdown Condition

a. Loss-of-coolant accident: Operate diesel generators to assume vital loads to maintain plant in safe shutdown condition. If incoming power from the 115-kV switchyard is available, the flexible generator bus disconnects (links) should be removed and power supplied from the station unit transformer in order that the diesels may be secured and act as a backup source.

b. Loss-of-flow accident: During hot plant conditions, dump steam as necessary in conjunction with coolant flow coastdown and natural circulation to maintain plant temperature

within permissible range. Operate diesel generators to assume vital loads to maintain safe plant shutdown. During cold plant conditions, operate residual heat removal system to maintain temperature below 200°F.

c. Steam line break accident (only applicable to hot plant condition): Operate diesel generators to assume vital loads to maintain safe plant shutdown. Dump steam in conjunction with flow coastdown and natural circulation to reduce plant temperature below 200°F.

While the two diesel generators are in service, the 4160-V buses can be restored using the 115-kV system and transformer 11 in 8 hours or less. This limits the time the two diesels are the sole source of power to 8 hours or less.

Startup Condition

The actions would be the same as for a shutdown condition, except the startup would be terminated and the reactor tripped prior to initiating these actions:

Power Operating Condition

a. Loss-of-coolant accident: Operate diesel generators to assume vital loads to maintain reactor in safe shutdown condition. If power is available from the 115-kV switchyard, remove flexible generator bus disconnects (links) , and transfer emergency load to station unit transformer in order that the diesel generator can be secured and used as a backup source.

b. Loss-of-flow accident: Operate diesel generators to assume vital loads to maintain plant in safe shutdown condition. Dump steam in conjunction with coolant coastdown and natural circulation to maintain temperature in permissible range.

c. Steam line break accident: Operate diesel generators to assume vital loads to maintain plant in safe shutdown condition. If possible, dump additional steam in conjunction with coolant flow coastdown and natural circulation to reduce plant temperature below 200°F. Transfer vital loads to station unit transformer and secure the diesel generators when access can be gained to the turbine building to remove generator bus disconnects (links) .

8.3.1.2.6.2 Reliability Assurance

Based on the foregoing discussion, it can be concluded that the electrical power system, utilizing two station auxiliary transformers fed from two independent sources plus two independent diesel generators (as shown in Figure 8.1-1), provides a reliable and flexible power system, capable of supplying the necessary plant equipment required under postulated outages with accident conditions existing. The bases for this conclusion follow:

a. The emergency diesel-generator power supply has been provided with sufficient capacity and redundancy to permit failure of a unit to start, with the remaining unit capable of supplying the vital loads necessary for safe plant shutdown. The engine is equipped with jacketwater and lube-oil heating, which maintain temperatures at a level to permit immediate load acceptance. A motor-driven lube-oil pump runs continuously until the engine is started, so that engine bearings are always lubricated and ready for operation. Therefore, the emergency diesel generators do not undergo cold fast starts.

b. A rigid program of preventative maintenance and testing is carried out to ensure that the diesel generators are maintained in a ready state and transformer failures are reduced to a minimum. Surveillance testing is performed monthly, and during these tests the diesels are run for a minimum of 1 hour at its continuous kW rating.

c. Emergency procedures are in effect to handle accident conditions under postulated power outages.

d. Sufficient quantities of diesel fuel oil will be on hand or in reserve to operate the diesel generators during any postulated power outage or accident condition. Information on diesel fuel oil capacities and availability is found in Section 9.5.4. Diesel fuel tanks are emptied, cleaned, and refilled with fresh fuel in accordance with the preventive maintenance program.

e. Provisions have been made to supply power to the station unit a transformer from the 115-kV grid after disconnecting the generator.

f. The probability of losing one station auxiliary transformer is low, based on reliability of these transformers. When considered in conjunction with a plant accident that requires shutdown of the plant, the probability is even less. However, in the event one transformer fails the second transformer is immediately available. The probability of losing both station auxiliary transformers is very low.

See Section 8.1.4.4 for additional safety features in case of station blackout.

8.3.1.2.7 Degraded Grid Voltage

The "degraded-grid-voltage" issue was first considered by the NRC in 1976 following a degraded grid condition at an operating plant. (*Reference 5*) A subsequent event at a second operating plant brought into question the conformance of the station electric distribution system to General Design Criterion 17. (*Reference 6*) Both of these items were ultimately resolved as part of the NRC SEP. The SEP evaluated the adequacy of protection against degraded grid voltages, as discussed in Section 8.3.1.2.7.1. The SEP also evaluated the adequacy of onsite power system voltages, as discussed in Section 8.3.1.2.7.2.

8.3.1.2.7.1 Susceptibility to Degraded Grid Voltage Conditions

By *Reference 7*, the NRC requested RG&E to assess the susceptibility of Ginna Station to sustained degraded voltage conditions and to assess the interaction between offsite and onsite emergency power systems. RG&E responded to the NRC request and in *Reference 8* the NRC concluded that the Ginna Station design was adequate based on the following considerations:

a. The Ginna Station Technical Specifications address degraded voltage protection. The Technical Specifications define the maximum times (determined by equipment manufacturers) that Class 1E equipment can operate for various degraded voltages without causing equipment damage, loss of equipment life, or a reduction in ability of equipment to perform required functions. The loss-of-voltage setpoint ensures that Class 1E motors will start and be loaded onto diesel generator within the time assumed in the accident analysis (Chapter 15). The Technical Specifications also define maximum allowable time delays of various

bus voltage levels before protective relaying action must be initiated to preclude any loss of service life of the motors. In addition, the time delays are long enough to override short bus voltage transients due to motor starting. Relays are tested periodically to ensure that they comply with the Technical Specifications.

b. The second level of voltage protection (degraded voltage condition) uses two-out-of-two coincident logic and is integrated into the logic scheme for the first level of voltage protection (loss-of-voltage condition). The loss-of-voltage protection has been upgraded and also requires coincident logic to trip. The logic automatically disconnects offsite power from Class 1E safeguards buses experiencing degraded voltage and initiates a voltage restoration for onsite emergency diesel generators. The relays and relaying scheme comply with IEEE 308-1974 and IEEE 279-1971.

c. In order to protect Class 1E equipment from unsatisfactory bus voltages, the undervoltage setpoints and time-delay values have been chosen to allow retention of the load-shedding feature even after emergency buses are being supplied by onsite sources. The load-shedding setpoints are chosen such that relay operating drift will not cause spurious trips of the onsite sources while Class 1E loads are being sequenced onto the buses. (*Reference 28*)

8.3.1.2.7.2 Adequacy of Onsite Power System Voltages

By *Reference 6*, the NRC requested RG&E to conduct an analysis to determine if the Ginna Station onsite power distribution system, in conjunction with offsite power sources, has sufficient capacity and capability to automatically start and operate all required safety loads within equipment voltage ratings. In response to the NRC request, RG&E performed an analysis based on an interactive computer loadflow program that modeled the entire Ginna Station electrical distribution system. The NRC reviewed the RG&E analysis and, in *Reference 9*, concluded that the Ginna Station design was acceptable based on the following considerations:

a. Under worst-case conditions, the Class 1E equipment will automatically start and continue to operate within their voltage design ratings.

b. The voltage at the Class 1E equipment will not exceed the upper design voltage rating under maximum offsite voltage and minimum plant loading conditions.

c. The analysis submitted was verified by test. The test data indicate that the analytical results are lower than actual measured values; thus the model is conservative with acceptable percentage error differences.

d. Spurious trips will not occur for the voltages and plant operating conditions analyzed.

8.3.1.3 Containment Electrical Penetrations

General Design Criterion 50 requires that containment penetrations be designed so the containment structures can, without exceeding the design leakage rate, accommodate the postulated environment resulting from a loss-of-coolant accident. IEEE 317, *Reference 10*, augmented by Regulatory Guide 1.63, *Reference 11*, provides electrical penetration design bases acceptable to the NRC staff.

The Ginna Station containment electrical penetrations are listed in Table 8.3-3. The penetrations have been shown to maintain structural integrity when subjected to mechanical stresses caused by large magnitude fault currents. The manufacturer has conducted tests at current levels higher than those available at Ginna. The tests indicated that no seal failures occurred on the high-energy penetrations when subjected to the design-basis fault currents. In addition, an RG&E study has shown that the penetrations can adequately handle the heating effects due to all levels of abnormal fault currents. These currents are assumed to be sustained for a period of time equal to the time for the backup circuit breaker to detect and clear a fault condition. The details of the evaluation can be found in *References 12, 13, 14, 15* and *16.*

8.3.1.4 Independence of Redundant Systems

Routing and separation standards applicable to existing cables are those that were invoked at the time of cable installation. Specific criteria for evaluating routing and separation issues associated with cables are provided in *Reference 26.*

8.3.1.4.1 Criteria Relating to Cable-Tray Loading and Separation

The following criteria were established for cable-tray loading and separation.

4160-V Power Cable

a. Generally, this power cable is routed in trays and/or a conduit designated for high-energy power circuits.

b. Cable load capacity in the original design was derated by using a 0.81 factor.

480-V Power Cable

A. Generally, the 480-V power cable is routed in trays designated for power circuits and not instrumentation and control.

B. Emergency diesel-generator feeders to buses 14 and 16 are separated, as are the feeders to buses 17 and 18.

C. Control cables are mixed in some cases with 480-V low power cable, size number 6 and smaller.

D. Tray loadings of 50% physical fill are typical; there are exceptions where some trays approach 100% fill. However, in all cases thermal loading has been considered. In the original design derating factors of 0.6 for 480-V power cable size number 4 and larger and 0.5 for size number 6 and smaller were used. In the case of the 480-V pressurizer heater cables, extra spacing has been provided around the cables and a derating factor of 0.5 has been used. With the use of these derating factors, the trays as filled are acceptable.

For modifications or design analyses performed after 1991 the criteria used for determining ampacity and derating factors in 480-V and 4160-V power cables in open top cable trays is that developed in ICEA P-54-440/NEMA Standard WC51, "Ampacities of Cables in Open Top Cable Trays."

Control Cable

In general, control cable trays are not filled above 100% of their physical capacity. However, there are areas where the cable fill may be over 100%. In all cases, however, thermal loading and seismic effects have been considered and these trays are acceptable as filled.

Instrument Cable

In general, instrument cable trays are not filled above 100% of their physical capacity. However, there are areas where the cable fill may be over 100%. In all cases, however, thermal loading and seismic effects have been considered and these trays are acceptable as filled.

8.3.1.4.2 Separation of Redundant Circuits

The following criteria were established for separation of redundant circuits.

A. All components requiring redundant cabling, as well as the cabling for redundant components, have been identified and the redundant power, instrumentation, and control cables are run separately.

   1. There is four-channel separation for the reactor protection and safeguards instrumentation circuits. This separation is maintained from the sensor through the analog racks to the logic or relay cabinets.

   2. Logic output control and power cables for the operation of redundant components in safety-related or engineered safety features systems are routed separately, except where cable trays converge at the control board. The location of redundant component wiring in the control board requires that these cables converge in this area.

   3. Undervoltage control cabling for bus 17 is not routed separately from redundant cabling in the west side of tray SH3, located in the basement of the screen house. There is no single contingency that can impair these cables in tray SH3 and inactivate enough engineered safety features equipment to jeopardize plant safety. Tray SH3 is not vulnerable to damage from mechanistic effects, and internal cable faults will not affect the independence of redundant undervoltage control cable in the west side of tray SH3.

B. Direct current control power from the station batteries is run in underground duct, separated, and apart from the cable tunnel, in order to maintain the necessary control in the event of an emergency.

C. The physical separation between redundant power, control, and instrument cable trays is generally a minimum of 5 in. vertically and 2 in. horizontally. An effort has been made to maintain maximum separation between trays, and in most cases has been accomplished, with separation of as much as 1 ft or more.

   The means of achieving physical separation between redundant cables for power, control, and instrument systems is by use of a galvanized sheet metal barrier in cable trays. Board-type barriers made of refractory materials, such as Marinite®, are also used in some cases to achieve electrical separation of cables.

D. There are three different locations on the containment where electrical penetrations are made. The three locations are widely separated. The physical separation of the penetration cartridges within the particular area is determined by the concrete reinforcing bars. The 10-in. penetration sleeves are spaced on minimum vertical spacing of 2-ft centers as dictated by the reinforcing.

8.3.1.4.3 Quality Assurance

Redundancy requirements for new modifications are initiated by the cognizant discipline (electrical) system designer. The designer prepares the applicable circuit schedule sheet (designating the cable routing and termination), which is checked by the cognizant electrical engineer.

The construction group installs the cable as directed by the circuit schedule sheet. When the circuit is completed, the foreman of the installing crew verifies that it was properly installed. The installations are monitored by field engineers and complete checks of all Class 1E circuits are made to further ensure that the installation is consistent with the design.

With respect to the initial cable installation, Westinghouse had direct responsibility for plant design and construction but RG&E field engineers also checked to ensure that cable installation met established criteria.

8.3.2 DIRECT CURRENT POWER SYSTEMS

8.3.2.1 Description

8.3.2.1.1 Direct Current System

The basic components of the direct current portions of the station electrical system are shown in Drawing 03202-0102.

The 125-V dc system is divided into two buses with one battery and two battery chargers (supplied from the 480-V system) serving each. The battery chargers supply the normal dc loads as well as maintaining proper charges on the batteries.

Two 60-cell, lead-acid, 1495 amp-hr stationary batteries (1A and 1B) are provided for power supply for control, emergency lighting, and the inverters for critical 60-cycle instrument power. Control power for all 4160-V and 480-V switchgear sections and for each diesel-generator can be supplied from either battery.

Two batteries provide separate sources of dc power. The train A engineered safety features equipment is supplied from battery 1A while train B engineered safety features equipment is supplied from battery 1B. In addition, the 480-V engineered safety features switchgear and diesel-generator control panels are supplied from either battery by means of an automatic transfer circuit in the switchgear and control panels. The normal supply from train A (switchgear buses 14 and 18 and diesel generator 1A) is from dc distribution panels 1A in the auxiliary building, diesel generator building, and screen house. These panels also provide the emergency dc supply for train B (switchgear buses 16 and 17 and diesel generator 1B). Similarly, dc distribution panels 1B in the auxiliary building, diesel generator building and screen

house provide the normal supply for switchgear buses 16 and 17 and diesel generator 1B and the emergency supply for switchgear buses 14 and 18 and diesel generator 1A. In the event of loss of the normal Class 1E battery supply, throwover contactors automatically transfer the load to the emergency supply (other battery). The alarm relays for the diesel generators actuate main control board annunciators. The distribution panels are shown in Drawing 03202-0102.

Battery testing is conducted in accordance with the Technical Specifications. A standard IEEE-450 discharge test verifies that battery capacity is at least 80% of the manufacturer's recommendations.

120-V ac instrument bus 1A is supplied by inverter 1A from battery 1A through main dc distribution panel 1A switch 15. 120-V ac instrument bus 1C is supplied by inverter 1B from battery 1B through main dc distribution panel 1B switch 15. The 120 Vac instrument power connections are shown on Drawing 03201-0102. One channel of wide range containment pressure and steam generator B pressure instrumentation (P950 and P479) is fed from a separate inverter (MQ 483), which is supplied by battery 1A through the main control board dc distribution panel 1A switch 14. See Drawing 03202-0102.

8.3.2.1.2 Battery Room

The two station batteries are in the basement of the control building. This locates the batteries within a Seismic Category I area and makes them fully accessible at all times. The batteries are seismically qualified to the requirements of IEEE 323-1983 and IEEE 344-1987. Each battery is provided with a rack designed to withstand earthquake forces. Bracing is provided to keep the cells from falling from the racks during an earthquake, and blocking is provided between the cells to prevent cell breakage through bumping together. The two batteries are physically separated by a 2-hr fire wall.

Supplemental heating and cooling to the battery rooms is provided by a non-seismic air conditioning unit, with associated service water piping, ventilation ductwork, electric heating coil, and fire dampers. The electric heating coil is seismically mounted in the heating, ventilation, and air conditioning unit discharge duct. The unit is controlled by thermostats located in each battery room. The system is designed to maintain the battery room space temperature within the normal operating temperature range and not adversely affect the storage capacity of the batteries. The unit and associated ductwork and piping are designed to function during all plant modes. Although the overall design is nonseismic, the piping and ductwork are designed to maintain structural integrity during a design-basis earthquake. Each battery room has an ac-powered propeller exhaust fan that takes suction from the area to remove hydrogen gas generated by the batteries. Also, there is a separate emergency dc-powered ventilation system that is manually actuated in the event of low air flow in the ductwork of either of these battery room exhaust fans. Loss of battery room ventilation is alarmed in the control room. (See also Section 9.4.9.3.)

8.3.2.1.3 Battery Chargers

There are four battery chargers available to the station batteries, each with a capacity of 200 amps. Chargers A (BYCA) and B (BYCB) are current limited to 165 amps. Chargers A1

(BYCA1) and B1 (BYCB1) are rated at 200 amps. The normal configuration is for chargers A1 and B1 to be in service, and chargers A and B to be in standby mode. Battery chargers A and A1 are normally aligned to battery A (BTRYA) , and battery chargers B and B1 are normally aligned to battery B (BTRYB).

8.3.2.1.4 Technical Support Center Battery

A third 60-cell, lead-acid, 2880-amp-hr station type battery was installed in the technical support center. This new battery and 500-amp charger supply power to the uninterruptible power supply to the plant process computer. The uninterruptible power supply is designed to provide continuous power for up to 3 hours during loss of its normal power supply and failure of the technical support center diesel generator to start. It also supplies dc power to the turbine emergency bearing oil pump, airside seal oil backup pump, circulating water discharge valves (V-3150 and V-3151), the 4-kV breaker test cabinet, and the anticipated-transient-without-scram (ATWS) mitigation system actuation circuitry (AMSAC) inverter. The AMSAC inverter supplies 120-V ac power to the AMSAC system FOX-3 rack that powers the AMSAC modules. The technical support center battery is capable of supplying both safeguards dc trains in the event of an emergency.

However, the system is designed with an intertie between each of the two main (A and B) distribution panels and the technical support center panel so that either Class 1E battery and its chargers can be removed from service. This intertie is utilized only during maintenance, testing, or abnormal plant conditions. The intertie is also configured so both Class 1E battery systems can be paralleled simultaneously through the technical support center battery (see Drawing 03202-0102). Procedures permit this condition only during specific 10 CFR 50 Appendix R conditions in which some process instrumentation from both trains is required for long-term cooldown.

Paralleling both safety-related dc trains is restricted by two separate key locks on the throwover switches and separate locked disconnect switches in each battery room.

The technical support center battery is tested periodically. Monthly, the specific gravity of selected cells is tested. Quarterly, the specific gravity of all cells is tested.

8.3.2.2 Analysis

Each of the two station batteries is capable of carrying its expected shutdown loads following a plant trip and a loss of all ac power for a period of 4 hours without battery terminal voltage falling below 108.6 V. Major loads with their approximate operating times for the four hour coping period on each battery are listed in Table 8.3-4 (*Reference 27*) and shown in Drawing 03202-0102.

Each of the four battery chargers has been sized to recharge either of the above partially discharged batteries within 24 hours while carrying its load.

At least one battery charger on each batteryshall be in service for each battery so that the batteries will always be at full charge in anticipation of a loss-of-offsite-power incident. This ensures that adequate dc power will be available for starting the emergency diesel generators and other emergency uses.

Automatic transfer of 125-V dc load groups from train A to train B (or vice versa) occurs in fifteen locations. Six throwover relays provide control power for the six 480-V buses, two throwover relays provide control power for the two diesel generator control panels, two throwover relays provide control power for the four switchgear breakers (12AX, 12AY, 12BX, 12BY), four throwover relays provide control power for buses 14, 16, 17 and 18 undervoltage system, and one throwover relay provides control power to main control board annunciator panels A through L. The throwover relays automatically transfer load to the redundant train on loss of power from the normal source. Each load automatically transfers back to the normal supply when the normal supply is restored.

Three abnormal battery conditions are alarmed in the control room. First, an alarm will activate if voltage on either bus decreases to 110 V. The alarming bus can be identified by monitoring separate bus voltmeters located on the control board. Low-voltage annunciation provides warning of a change from normal conditions before they reach critical voltage conditions. Second, an alarm will activate if the output from a battery charger is lost. Local instrumentation is used to identify the affected battery charger. Third, an alarm will activate for a ground on either battery. The affected battery is identified by a local ground light on the respective main battery charger.

In addition a battery load flow monitor system monitors current magnitudes and direction for each of the station batteries. The system provides visual displays of the direction and magnitude of current going into and out of each battery locally in the battery room and remotely in the main control room. The system annunciates abnormal battery conditions and loss of continuity of battery circuits both locally and in the main control room. The system provides a separate group alarm for the vital batteries, which activates when either battery indicates a high voltage (greater than 140 V), low voltage (less than 132 V), low charging rate, or negative (discharging) rate. The charger alarm will respond to charger current levels of zero or less. This system, along with the three abnormal battery condition alarms, affords complete indication of abnormal dc system conditions.

In a generic letter to licensees, Generic Letter 91-06, on April 29, 1991, the NRC staff identified actions to be taken by licensees related to Generic Issue A-30, Adequacy of Safety Related DC Power Supplies. Rochester Gas and Electric Corporation responded (*Reference 17*) to the generic letter with detailed information on the safety-related direct current system at Ginna Station including the control room alarms/indications and response procedures associated with the battery monitoring system; existing maintenance, surveillance, and testing procedures associated with the batteries and battery chargers; justification for negative responses to questions presented in the generic letter; and procedural changes that would be implemented to comply with the recommendations of the generic letter. The NRC action with respect to Generic Letter 91-06 was completed upon transmittal to RG&E (*Reference 18*) of their finding that RG&E's responses satisfied the reporting requirements of the generic letter.

8.3.2.3 Direct Current Fuse Coordination

As a result of SEP Topic VI-7.C.1, Independence of Redundant Onsite Power Systems, specific design requirements have been established and implemented to provide dc fuse coordination.

There are two redundant Class 1E 125-V dc distribution systems, each consisting of a main fuse and a series of branch fuses. Branch fuses usually feed panels with smaller branches and subbranches. Certain branch fuses feed supplementary overcurrent protection fuses. The supplementary fuses supply discreet loads within equipment and are generally not coordinated. All main and branch fuses (not supplementary overcurrent fuses) are treated as isolation devices. An isolation device prevents malfunctions in one section of a distribution system from causing unacceptable influences in other sections of that system. Non-Class 1E circuits are electrically isolated from Class 1E circuits by these isolation devices.

All fuses used as isolation devices in the distribution systems are required to be coordinated, which is generally defined as being able to carry design basis currents for all loads. In addition, isolation devices closest to a fault must clear prior to the clearing or degrading of the upstream fuses. Coordination is demonstrated provided that the following more detailed requirements are satisfied:

A. All branch fuses must continuously carry worst-case credible loads without interruption of service under accident temperature conditions. Worst-case credible loads are the sum of all Class 1E and non-Class 1E components within a load group; that is, all components fed by a branch fuse are assumed to be operating at the same time.

B. All main fuses (those that supply branch fuses) are sized to carry the combination of all Class 1E worst-case credible load currents plus 125% of all non-Class 1E normal loads.

C. Isolation is demonstrated by maintaining a minimum main to branch fuse ratio depending on the operating characteristics of the fuses. In addition, where a large number of branches are supplied by a main fuse, the effects of the branch circuits carrying normal load current must be combined along with the largest faulted branch to ensure that the main fuse will not be degraded or blow.

D. Actual response characteristics are developed and used along with the I^2t values (for 30-amp fuses and above) when different types of fuses are being coordinated.

A mixture of time delay, general purpose, and fast-acting fuses are used in the dc distribution systems. Various combinations are made to coordinate with each other.

The main and branch fuses used in the dc distribution system must have a minimum dc rating of 140 V.

Since the Class 1E distribution systems supply both safeguards and non-safeguards loads, the interconnections between Class 1E and non-Class 1E loads must not result in a degradation of the safety systems. The fuses supplying the nonessential loads are therefore considered isolation devices and must meet Class 1E requirements. The specific criteria in IEEE 308 governing the connection and disconnection of non-safety-related distribution buses apply. In addition, the separation requirements of IEEE 384-1981 also apply to the extent practical given the existing plant configuration. Where IEEE 384-1981 cannot be met, the separation criteria of Section 8.3.1.4 must be met.

The dc distribution system fed from the Class 1E vital batteries has been analyzed, upgraded if required, and tested to meet the dc fuse coordination requirements. All fuses fed from the

Class 1E vital batteries are included in the Ginna Station configuration control program and changes in dc fuses are controlled through the configuration control program.

8.3.3 FIRE PROTECTION FOR CABLE SYSTEMS

Information on fire protection systems and practices at Ginna Station is contained in Section 9.5.1. Information on fire protection for cable systems is also given below and in *References 19 through 23*.

In general, motor and transformer feeder cables are rated on a continuous basis at 115% of full load current. This provides for motor operation at service factor rating. Tray loadings of 50% physical fill are typical; there are exceptions where some trays approach 100% fill. However, in all cases thermal loading has been considered. In the original design, derating factors of 0.6 for 480-V power cable size number 4 and larger and 0.5 for size number 6 and smaller were used. In the case of the 480-V pressurizer heater cables, extra spacing has been provided around the cables and a derating factor of 0.5 has been used. With the use of these derating factors, the trays as filled are acceptable. For modifications or design analyses performed after 1991 the criteria used for determining ampacity and derating factors in 480-V and 4160-V power cables in open top cable trays is that developed in ICEA P-54-440/NEMA Standard WC51, "Ampacities of Cables in Open Top Cable Trays".

Fire barriers are used at cable trays and cable runs where they enter or leave a designated fire area. There are fire barriers where the cable trays enter the relay room, auxiliary building, and where vertical trays pass through floor openings.

Alternating current circuits within the plant are protected by circuit breakers. Direct current circuits are protected by fuses. The use of circuit breakers provides three-phase isolation of a circuit that is not guaranteed by using fuses for three-phase circuits, since the operation of any thermal element of the breaker opens all three phases of the breaker.

Nonsegregated, metal-enclosed 4160-V buses are used for all major bus runs where large blocks of current are to be carried. The routing of the metal-enclosed buses minimizes its exposure to mechanical, fire, and water damage.

Power circuit cables were established on the basis of the maximum ambient temperature expected, the current requirements of the respective equipment, and the designed cable tray loading. An ambient temperature of 50°C within the reactor containment and an ambient temperature of 40°C in all other plant areas are the design-basis ambient temperatures for all power cable ratings.

The application and routing of control, instrumentation, and power cables minimizes their vulnerability to damage from any source. All cables are designed using conservative margins with respect to their current carrying capacities, insulation properties, and mechanical construction. Power cable insulation in the reactor building has fire-resistant sheathing, selected to minimize the harmful effects of radiation, heat, and humidity. Appropriate instrumentation cables are shielded to minimize induced voltage and magnetic interference. Wire and cables related to engineered safety features and Reactor Trip System (RTS) are routed and installed

to maintain the integrity of their respective redundant channels and protect them from physical damage.

The station auxiliary transformers, the station unit transformer, and the generator step-up transformer are located outdoors, physically separated from each other.

Lightning arresters are used where applicable for lightning protection. All outdoor transformers are covered by automatic water spray systems to extinguish oil fires quickly and prevent the spread of fire. Transformers are spaced to minimize their exposure to fire, water, and mechanical damage.

The 4160-V switchgear and 480-V load centers are located in areas that minimize their exposure to mechanical, fire, and water damage. This equipment is properly coordinated electrically to permit safe operation of the equipment under normal and short circuit conditions.

The 480-V motor control centers are located in the areas of electrical load concentration. Those associated with the turbine-generator auxiliary system in general are located below the turbine-generator operating floor level. Those associated with the nuclear steam supply system are located in the auxiliary building.

REFERENCES FOR SECTION 8.3

1. Letter from D. M. Crutchfield, NRC, to J. E. Maier, RG&E, Subject: SEP Topics VII-3 and VIII-2, dated April 2, 1981.

2. U.S. Nuclear Regulatory Commission, Diesel-Generator Protective Trip Circuit Bypasses, Branch Technical Position ICSB-17.

3. Letter from D. M. Crutchfield, NRC, to J. E. Maier, RG&E, Subject: SEP Topics VI-7.F, VII-3, VII-6, and VIII-2, Safety Evaluations for Ginna, dated June 24, 1981.

4. U.S. Nuclear Regulatory Commission, Selection, Design, and Qualification of Diesel-Generator Units Used as Standby (Onsite) Electric Power Systems at Nuclear Power Plants, Regulatory Guide 1.9.

5. Letter from A. Schwencer, NRC, to L. D. White, Jr., RG&E, Subject: R. E. Ginna Atomic Power Station (degraded grid voltage event at another site), dated August 12, 1976

6. Letter from W. Gammill, NRC, to All Power Reactor Licensees (except Humboldt Bay), Subject: Adequacy of Station Electric Distribution Systems Voltages, dated August 8, 1979.

7. Letter from A. Schwencer, NRC, to L. D. White, Jr., RG&E, Subject: R. E. Ginna Atomic Power Station (susceptibility to degraded voltage), dated June 3, 1977.

8. Letter from D. M. Crutchfield, NRC, to J. E. Maier, RG&E, Subject: Amendment 38 to Provisional Operating License DPR-18, dated March 26, 1981.

9. Letter from D. M. Crutchfield, NRC, to J. E. Maier, RG&E, Subject: SEP Topic VIII-1.A, Potential Equipment Failures Associated With Degraded Grid Voltage, dated January 29, 1982.

10. IEEE-317, Electrical Penetration Assemblies in Containment Structures for Nuclear Power Generating Stations.

11. U.S. Nuclear Regulatory Commission, Electric Penetration Assemblies in Containment Structures for Light-Water-Cooled Nuclear Power Plants, Regulatory Guide 1.63.

12. Letter from H. G. Saddock, RG&E, to D. L. Ziemann, NRC, Subject: SEP Topic VIII-4, Electrical Penetrations of Reactor Containment, dated April 12, 1979.

13. Letter from L. D. White, Jr., RG&E, to D. M. Crutchfield, NRC, Subject: SEP Topic VIII-4, Electrical Penetration of Reactor Containment, dated July 21, 1980.

14. Letter from J. E. Maier, RG&E, to D. M. Crutchfield, NRC, Subject: SEP Topic VIII-4, Electrical Penetrations, dated June 9, 1981.

15. Letter from J. E. Maier, RG&E, to D. M. Crutchfield, NRC, Subject: SEP Topic VIII-4, Electrical Penetrations, dated July 14, 1981.

16. Letter from D. M. Crutchfield, NRC, to J. E. Maier, RG&E, Subject: SEP Topic VIII-4, Electrical Penetrations of Reactor Containment, Safety Evaluation Report for R. E. Ginna Nuclear Power Plant, dated October 8, 1981.

17. Letter from R. C. Mecredy, RG&E, to A. R. Johnson, NRC, Subject: Resolution of Generic Issue A-30, Adequacy of Safety-Related DC Power Supplies (Generic Letter 91-06, dated April 29, 1991), dated October 28, 1991.

18. Letter from A. R. Johnson, NRC, to R. C. Mecredy, RG&E, Subject: Closure of Generic Letter 91-06, "Resolution of Generic Issue A-30, Adequacy of Safety-Related DC Power Supplies" - (TAC No. M81444), dated June 21, 1993.

19. Letter from D. L. Ziemann, NRC, to L. D. White, Jr., RG&E, Subject: Amendment 24 to Provisional Operating License DPR-18, dated February 14, 1979.

20. Letter from D. M. Crutchfield, NRC, to J. E. Maier, RG&E, Subject: Fire Protection - Ginna, dated December 17, 1980.

21. Letter from D. M. Crutchfield, NRC, to J. E. Maier, RG&E, Subject: Fire Protection - Ginna, dated February 6, 1981.

22. Letter from Leon D. White, RG&E, to A. Schwencer, NRC, Subject: Fire Protection at R. E. Ginna Nuclear Power Plant, dated February 24, 1977.

23. Letter from J. E. Maier, RG&E, to D. M. Crutchfield, NRC, Subject: 10 CFR Part 50, Appendix R, Alternative Shutdown System, dated January 16, 1984.

24. Rochester Gas and Electric Corporation, Design Analysis, DA-EE-92-098-01, Diesel Generator A Steady State Loading Analysis, Rev. 3, dated July 30, 1999.

25. Rochester Gas and Electric Corporation, Design Analysis, DA-EE-92-120-01, Diesel Generator B Steady State Loading Analysis, Rev. 3, dated August 3, 1999.

26. Topical Design Basis - Electrical Independence, dated June 19, 1997.

27. Rochester Gas & Electric Corporation Design Analysis DA-EE-97-069, Sizing of Vital Batteries A and B, Revision 2, dated September 7, 1999.

28. Rochester Gas & Electric Corporation Design Analysis DA-EE-006-08, 480 Volt Under-voltage Relay Settings and Test Acceptance Criteria, Revision 1, dated September 26, 1997.

Table 8.3-1a
ENGINEERED SAFETY FEATURES ACTUATION (ESFAS) SEQUENCE ACTION (TRAIN A)

Time (Sec)	*(Train B action similar)*
0	Starting signal will be given to emergency generator 1A.
0	Trip signals will be given to the following 480-V bus tie breakers; 52/BT 16-14, 52/BT 16-15, 52/BT 14-13, and 52/BT 17-18. Administrative procedure is such that breakers 52/BT 16-14 and 52/BT 17-18 shall be open during normal plant operation. Thus, in effect, the only tie breakers that could need to be tripped are 52/BT 14-13 and 52/BT 16-15.
0	All nonsafeguards loads on buses 14 and 18 will be given trip signals.
Note:	With outside power available, the sequence will follow that given in the diesel-generator loading tabulation shown in Table 8.3-1b. In this case, 10 sec should be subtracted from the times given in Table 8.3-1b starting with "Safeguards buses energized."

Without outside power the automatic sequences will proceed as follows:

0	All loads will be tripped off buses 14 and 18 with the exception of the safeguards motor control center 1C and the containment spray pump.
10	Emergency generator 1A will have started and reached no-load speed and voltage at which time the breakers connecting it to buses 14 and 18 will close.
10 to 45	The sequence will follow that given in Table 8.3-1b.

Table 8.3-1b
ENGINEERED SAFETY FEATURES ACTUATION (ESFAS) SEQUENCE ACTION - DIESEL GENERATOR LOADING

Time (sec)	*Bus 14 and 18 - Train A (Generator 1A)*	*Time (sec)*	*Bus 16 and 17 - Train B (Generator 1B)*
0	Safety injection signal	0	Safety injection signal
10	Safeguards buses energized	10	Safeguards buses energized
15	Safety injection pump 1A running	15	Safety injection pump 1B running
20	Safety injection pump 1C running	22	(If sequencing timer 2/SIP1C2 fails to operate) safety injection pump 1C running
25	Residual heat pump 1A running	27	Residual heat pump 1B running
30	Service water pump 1A or 1C running, selected prior to accident, i.e., preselected	32	Service water pump 1B or 1D running, selected prior to accident, i.e., preselected
35	Containment fan 1A running	37	Containment fan 1B running
40	Containment fan 1D running	42	Containment fan 1C running
45	Auxiliary feedwater pump 1A running	47	Auxiliary feedwater pump 1B running
		52	(If sequencing timer 2/SIP1C2 operates and BKR1C2 does not close) safety injection pump 1C running
a	Containment spray pump 1A running	a	Containment spray pump 1B running

a. May be loaded onto safeguards buses anytime after buses are energized

Table 8.3-2a
DIESEL GENERATOR LOADING (TRAIN A)

	Injection Phase		*Recirculation Phase Low Head and Safety Injection*		*Recirculation Phase Low Head*	
Engineered Safety Features Load	***Quantity Required***	***kW***	***Quantity Required***	***kW***	***Quantity Required***	***kW***
Safety injection pumps	2	**604**	1	**302**	0	-
Residual heat removal pump	1	**125**	1	**145**	1	**145**
Service water pump	1	**266**	2	**534**	2	**534**
Containment air recirculating fans	2	**401**	2	**291**	2	**291**
Auxiliary feedwater pump	1	**230**	1	**230**	1	**230**
Containment spray pump	1	**191**	0	-	0	-
Component cooling water pump	0	-	1	**127**	1	**127**
Motor control center loading		**147**		**174**		**174**
Excitation losses		15		15		15
Crankcase exhaust motor		**2**		**2**		**2**
Cable losses		**35**		23		**17**
TOTAL ENGINEERED SAFEGUARDS LOAD		**2016**		**1843**		**1535**

Table 8.3-2b
DIESEL GENERATOR LOADING (TRAIN B)

	Injection Phase		***Recirculation Phase Low Head and Safety Injection***		***Recirculation Phase Low Head***	
Engineered Safety Features Load	***Quantity Required***	***kW***	***Quantity Required***	***kW***	***Quantity Required***	***kW***
Safety injection pumps	2	**604**	1	**302**	0	-
Residual heat removal pump	1	**125**	1	**145**	1	**145**
Service water pump	1	**266**	2	**534**	2	**534**
Containment air recirculating fans	2	**401**	2	**291**	2	**291**
Auxiliary feedwater pump	1	**230**	1	**230**	1	**230**
Containment spray pump	1	**191**	0	-	0	-
Component cooling water pump	0	-	1	**127**	1	**127**
Motor control center loading		**140**		**166**		**167**
Excitation losses		15		15		15
Crankcase exhaust motor		**2**		**2**		**2**
Cable losses		**33**		23		**17**
TOTAL ENGINEERED SAFEGUARDS LOAD		**2007**		**1835**		**1528**

Table 8.3-3
CONTAINMENT ELECTRICAL PENETRATIONS

Penetration Number	*Manufacturer*	*Circuit Description*[a]
AE-1	Crouse-Hinds	Containment air recirculation fan 1C
AE-2	Crouse-Hinds	Pressurizer heaters
AE-3	Crouse-Hinds	Motor-operated valves and pressurizer heater groups 21, 22, and 23
AE-4	Crouse-Hinds	Containment air recirculation fan 1B
AE-5	Crouse-Hinds	Pressurizer heaters
AE-6	Crouse-Hinds	Reactor compartment fans 1A/1B, pressurizer heater groups 24, 25, and 26, and lighting transformer 1D
AE-7	Crouse-Hinds	Motor-operated valves and reactor compartment fans 1A/1B
AE-8	Crouse-Hinds	Solenoid-operated valves and instrumentation and control
AE-9	Crouse-Hinds	Spare
AE-10	Crouse-Hinds	Instrumentation and control
AE-11	Crouse-Hinds	Instrumentation and control
AE-12	Westinghouse	Instrumentation and control
AE-13	Crouse-Hinds	Reactor coolant pump 1B
AE-14	Crouse-Hinds	Reactor coolant pump 1B
BE-1	Crouse-Hinds	In-core instrumentation
BE-2	Crouse-Hinds	Spare
BE-3	Crouse-Hinds	In-core instrumentation and hydrogen recombiner 1B
BE-4	Crouse-Hinds	In-core instrumentation
CE-1	Crouse-Hinds	Instrumentation and control and microprocessor rod position indication
CE-2	Crouse-Hinds	Instrumentation and control
CE-3	Westinghouse	Instrumentation and control
CE-4	Crouse-Hinds	Instrumentation and control
CE-5	Crouse-Hinds	Instrumentation and control
CE-6	Crouse-Hinds	Instrumentation and control
CE-7	Crouse-Hinds	Instrumentation and control
CE-8	Crouse-Hinds	Power and intermediate range detectors
CE-9	Crouse-Hinds	Power and source range detectors

Penetration Number	***Manufacturer***	***Circuit Description***[a]
b		
CE-11	Crouse-Hinds	Power and intermediate range detectors
CE-12	Crouse-Hinds	Power and source range detectors
CE-13	Crouse-Hinds	Control rod drive lift coils
CE-14	Crouse-Hinds	Control rod drive gripper coils
CE-15	Crouse-Hinds	Control rod drive lift coils, Control rod shroud fan 1A
CE-16	Crouse-Hinds	Control rod drive lift coils
CE-17	Crouse-Hinds	Control rod drive gripper coils
CE-18	Crouse-Hinds	Control rod drive lift coils
CE-19	Crouse-Hinds	Motor-operated valves and instrumentation
CE-20	Crouse-Hinds	Control rod shroud fan 1B
CE-21	Crouse-Hinds	Containment air recirculation fan 1A
CE-22	Crouse-Hinds	Smoke and fire detectors
CE-23	Crouse-Hinds	Motor-operated valves and instrumentation
CE-24	Crouse-Hinds	Containment air recirculation fan 1D
CE-25	Crouse-Hinds	Reactor coolant pump 1A
CE-27	Crouse-Hinds	Reactor coolant pump 1A
CE-29	Crouse-Hinds	Instrumentation and solenoid-operated valves
CE-30	Westinghouse	Radiation monitors
CE-31	Westinghouse	Radiation monitors
CE-32	Crouse-Hinds	Instrumentation and solenoid-operated valves
CE-33	Crouse-Hinds	Instrumentation and solenoid-operated valves
CE-34	Westinghouse	Radiation monitors

a. Only the major circuit descriptions are listed for each penetration.
b. Penetration Number CE-10 no longer exists.

Table 8.3-4
MAJOR BATTERY LOADS

Battery A Loading (Loads > 10 Amps)

Load	Current	Time Frame
Inverter A/Auxiliary Loads	137 amps	0-4 hours
MOV 3505A (Starting)	82 amps	0-1 minutes
Feedwater Pump A dc Lube Oil Pump (Starting)	83 amps	0-1 minutes
Circuit Breaker Tripping	82 amps	0-1 minutes
Feedwater Pump A dc Lube Oil Pump (Running)	16 amps	1-12 minutes
Circuit Breaker Closing/Field Flash	61 amps	239-240 minutes
MCB Annunciators A-L	16 amps	0-4 hours

Battery B Loading (Loads > 10 Amps)

Load	Current	Time Frame
Inverter B/Auxiliary Loads	107 amps	0-4 hours
MOV 3504A (Starting)	82 amps	0-1 minutes
Feedwater Pump B dc Lube Oil Pump (Starting)	82 amps	0-1 minutes
Circuit Breaker Tripping	82 amps	0-1 minutes
TDAFW Pump dc Oil Pump (Starting)	71 amps	0-1 minutes
Feedwater Pump B dc Lube Oil Pump (Running)	14 amps	1-12 minutes
TDAFW Pump dc Oil Pump (Running)	15 amps	1-120 minutes
Circuit Breaker Closing/Field Flash	61 amps	239-240 minutes
MOV 3996 (Starting)	115 amps	1-2 minutes

9 AUXILIARY SYSTEMS

9.1 FUEL STORAGE AND HANDLING

9.1.1 NEW FUEL STORAGE

New fuel is delivered by truck to the site in NRC-Department of Transportation-approved containers. The assemblies are removed, inspected, and transferred to the new fuel storage racks using the auxiliary building crane (see Figure 9.1-1). The storage location on the operating level of the auxiliary building facilitates the unloading of trucks and the transfer of the fuel assemblies. The Seismic Category I storage vault contains specially constructed racks which ensure a minimum 20-in. center-to-center spacing of the new fuel assemblies. This spacing ensures a K_{EFF} less than 0.95 for the accidental full water density flooding scenario and less than 0.98 for the accidental low water density (optimum moderation) flooding scenario. The use of Westinghouse 422+ Vantage Fuel Assemblies satifies these K_{EFF} requirements (*Reference 67* and *Reference 68*). The storage area is located above grade to help prevent this from occurring.

The new fuel storage area is configured to store 12 fuel assemblies. The fuel storage area is isolated from potential contamination resulting from work performed in the auxiliary building maintenance shop, or from normal activities on the auxiliary building operating floor.

The design of the new fuel storage racks is in compliance with 10 CFR 50.68, Criticality accident requirements.

9.1.2 SPENT FUEL STORAGE

The original spent fuel storage racks provided capacity for the storage of 210 fuel assemblies. In 1976, the NRC approved the replacement of the original racks with higher density flux trap type racks (*References 1* and *2*). This expanded the storage capability from 210 to 595 fuel assemblies.

In 1984, the NRC approved the conversion of six flux trap type racks to high-density fixed poison type racks (*References 3* and *4*). This further expanded the storage capacity from 595 to 1016 fuel assemblies. At this point, the spent fuel pool (SFP) was divided into two regions. Region 1 comprised three flux trap type racks to accommodate a full core off-load. Region 2 consisted of six high-density fixed poison (Boraflex) type racks for the storage of 840 fuel assemblies that satisfied minimum burnup criteria and had cooled for a minimum of 60 days.

In 1998, the NRC approved re-racking the spent fuel pool (*Reference 38*). This re-rack effort, to be done in two phases, reconfigures the pool to accommodate a net increase of 353 locations. This is accomplished by retaining the six existing high-density region 2 racks (840 minus 12 for attachment of new racks = 828 locations) and installing new borated stainless steel (BSS) racks with up to 541 additional storage locations for a total of 1369 storage locations after completion of both phases.

After completion of phase 1 of the re-rack in November 1998, the pool has three types of racks in two regions. Region 1 contains new high-density flux-trap design BSS racks designated as type 3 for fresh and spent fuel. Region 2 contains the existing Boraflex racks designated as type 1 and new high-density BSS racks designated as type 2. With the completion of

phase 1, the pool contains 1321 storage locations. Figure 9.1-3 shows the phase 1 re-racked configuration.

In addition to intact fuel assemblies, consolidated fuel canisters can also be stored in region 1 and region 2 of the pool. In 1985, the NRC approved the storage of consolidated fuel in the spent fuel pool (*Reference 5*). This process involves placing spent fuel containing, at most, all the rods from two standard spent fuel assemblies, which have decayed at least 5 years, into one canister. The canisters are designed to hold 358 fuel rods and can be placed in either region 1 or region 2 rack locations. The canisters are fabricated from stainless steel.

Prior to Plant Uprate the number of fuel rods contained in the intact fuel assemblies and/or consolidated rod storage canisters was limited to no more than the number of rods contained in 1879 fuel assemblies (179 fuel rods per assembly x 1879 assemblies = 336,341 fuel rods). The Technical Specifications limitedstorage at that time to 1879 fuel assemblies. As part of plant uprate in 2006, the maximum number of fuel assemblies that could be stored in the sent fuel pool was limited to 1321, which is consistent with the regulatory requirements imposed by Reference 68.

The fuel assembly grids, guide tubes, upper tie plates, and lower tie plates that remain after removal of the fuel rods are crushed and stored in a waste canister. The waste canister will maintain the fuel assembly non-fuel-bearing components in a physically stable configuration such that under all postulated conditions there will be no damage to the stored spent fuel in the spent fuel pool (SFP). The waste canister will be stored in the spent fuel storage pool until ultimate disposal.

The spent fuel pool inventory consists of intact fuel assemblies and other components (both fuel bearing and non-fuel bearing, including consolidated fuel canisters, consolidated hardware canisters, a failed fuel rod storage basket, dummy fuel assemblies, a dummy canister, trash baskets, an irradiated sample basket, and a coupon tree). In addition, one cell in the type 1 racks is capped.

The design of the new fuel storage racks is in compliance with 10 CFR 50.68, Criticality accident requirements.

9.1.2.1 Design Criteria

9.1.2.1.1 General

The original design was based on the General Design Criteria (GDC) included in the Atomic Industrial Forum (AIF) version of proposed criteria issued by the AEC for comment on July 10, 1967. These criteria (AIF-GDC 66, 67, 68, and 69) are discussed in Section 3.1.1. Criteria for the design and performance of the current spent fuel storage system are defined by AIF-GDC 62, ANSI/ANS Standard 57.2-1983 and Regulatory Guide 1.13. The spent fuel racks satisfy these criteria as described below. In addition, the spent fuel rack design complies with the "Staff Position for Review and Acceptance of Spent Fuel Storage and Handling Applications," dated April 14, 1978, as modified January 18, 1979; and section 9.1.2 of the Standard Review Plan dated July 1981 (*Reference 52*).

9.1.2.1.2 Effective Multiplication Factor

The design of spent fuel storage racks and transfer equipment shall be such that the effective multiplication factor will not exceed 0.95 with new fuel of the highest anticipated enrichment in place assuming limited credit for soluble boron. Credit may be taken for the inherent neutron absorbing effect of materials of construction or, if the requirements are met, for added nuclear poisons or for fuel assembly burnup.

The effective multiplication factor is less than or equal to 0.95, including biases and uncertainties, provided the combination of assembly average burnup and initial U-235 enrichment satisfies the requirements of Technical Specification LCO 3.7.13. Assemblies are stored in regions 1 and 2 locations based on their initial enrichments and minimum burnups as specified in LCO 3.7.13. Credit is taken in the LCO calculations for the presence of borated stainless steel in the type 2 and type 3 racks.

9.1.2.1.3 Protection Against Damage

Fuel handling system facilities shall be designed to prevent damage to fuel assemblies while in storage or during transport from one location to another.

Each fuel assembly or consolidated fuel canister is stored in a stainless steel box, which physically separates that fuel assembly from all other fuel assemblies. The stainless steel box is strong enough to prevent damage to the contained fuel assembly in the unlikely event that another fuel assembly should be dropped anywhere on top of the spent fuel racks.

The rack design contains no protuberances that could cause damage to a fuel assembly being lowered into or being lifted out of a storage position. Lead-ins are provided at the top of some boxes in region 1. No lead-ins are provided in region 2.

9.1.2.1.4 Storage Capacity

The fuel storage pool capacity shall accommodate at least one shipping cask and one complete core, in addition to the maximum number of fuel assemblies normally stored in the pool. Consideration should be given to potential for highly radioactive components, which may require storage in the pool.

The rack design provides the capability to store projected spent fuel discharges resulting from operation through the fall of 2009, while still retaining the capability to accommodate one shipping cask and removal of the complete core from the reactor vessel. The current Ginna operating license expires in 2029. The racks will have the capability to accommodate removal of the core from the reactor during the operating cycle that ends in the spring of 2011. Following receipt of new fuel in preparation for the 2011 spring outage, the racks will not have the capability to store a complete core removal from the reactor vessel. Ginna plans to implement on-site dry cask storage after the 2009 refueling outage to accommodate spent fuel storage requirements through 2029. The end of the current license period. During MODE 6 (Refueling) periods, and whenever the shipping cask is not in the pool, the cask area will be available to store radioactive components or to perform underwater inspection or mechanical operations on radioactive components.

9.1.2.1.5 Fuel Pool Cooling System Instrumentation

Suitable provisions shall be made in the design of the fuel storage pool cooling system to permit installation of instrumentation to monitor system performance.

The pressure and flow of service water (SW) and the temperature, pressure, and flow of spent fuel pool (SFP) water circulating through SFP heat exchanger A are measured and indicated locally. Service water (SW) pressure and flow through SFP heat exchanger B has local indication, as well as installed resistance temperature detectors (RTD) to allow local measurement of service water (SW) inlet/outlet temperatures. SFP heat exchanger B also has indication for the pressure and flow of spent fuel pool (SFP) water as well as installed resistance temperature detectors (RTD) to allow local measurement of spent fuel pool (SFP) water inlet/outlet temperatures. The spent fuel pool (SFP) water temperature is measured and a high temperature alarm is actuated in the control room if the spent fuel pool (SFP) water temperature exceeds 115°F. To provide increased monitoring capabilities during a full core off-load, and depending upon lake temperature this high temperature alarm setpoint may be lowered to a level as determined by the Reactor Engineer. The spent fuel pool (SFP) water level is also measured and a high/low alarm is actuated in the control room if the water level exceeds preset values.

9.1.2.1.6 Seismic Design

The fuel storage pool and storage racks shall be designed to accommodate, within applicable code stress limits, normally imposed loads due to half the design-basis earthquake.

The fuel storage pool and storage racks shall be designed so that normally imposed loads plus loads imposed by the design-basis earthquake will not cause failure. Plastic deformation may take place but with a substantial margin to that which might result in failure.

These criteria are satisfied as described in Section 3.7.

The spent fuel (SFP) pool is founded on sound rock. The spent fuel storage racks are capable of withstanding loads imposed by the safe shutdown earthquake without plastic deformation of the racks and without damage to spent fuel assemblies. The bearing loads are sufficiently low to prevent damage to the stainless steel liner of the spent fuel pool (SFP) and supporting concrete. The reinforced-concrete structure of the pool is capable of transmitting these loads to the rock without plastic deformation of the pool structure.

9.1.2.1.7 Fuel Handling System

Lifting and transport equipment of the fuel handling system shall be designed to prevent dropping of fuel assemblies. Heavy loads shall not be carried over stored fuel assemblies. The design shall prevent lifting a fuel shipping cask over fuel storage racks.

The design includes these provisions except for the full consolidated fuel canisters. The canisters containing consolidated fuel are considered a heavy load per NUREG-0612 criteria. They may be carried over stored fuel assemblies provided that the spent fuel racks beneath the transported canister contain only spent fuel that has decayed at least 60 days since reactor shutdown. See Section 9.1.5 for the discussion of control of heavy loads at Ginna Station.

9.1.2.1.8 Minimum Center-to-Center Spacing

Fuel storage racks shall physically prevent placing more than one fuel assembly in a single storage location; specified minimum center-to-center distances between individual fuel assemblies shall be maintained to meet criticality requirements.

The rack design permits only one fuel assembly or consolidated fuel canister to be inserted into a storage box. Minimum center-to-center spacings between fuel assemblies are maintained by the rack structure.

In the fuel consolidation process, fuel rods are removed from the fuel assembly and stored in a canister. The canister, containing no more than 358 fuel rods (two fuel assemblies), is then placed in a rack storage location. The design of the storage racks has been verified to be able to withstand the loads associated with a maximum dead weight of a canister with 358 fuel rods in each storage location.

Criticality analyses show that even with the consolidated fuel storage, the K_{EFF} criterion of less than or equal to 0.95 is satisfied.

9.1.2.1.9 Stability of Fuel Storage Racks

Fuel storage rack design shall prevent geometric changes due to environmental conditions characteristic of this site. The design shall be stable against tipping with provisions to prevent unplanned movement of the fuel or the racks.

The region 2 type 1 racks, which were not replaced in phase 1 of the re-rack in 1998, are free standing racks which are supported on the pool floor only. The gaps between racks and those between the racks and the pool walls are designed such that the new racks installed in phase 1 of the re-rack do not impose any additional loading on the resident racks or on the pool walls. The new region 1 type 3 racks and region 2 type 2 racks installed in phase 1 are also free standing and self-supporting.

The new type 2 and 3 racks' stainless steel square tubes are fillet welded to the base plate. The stainless steel cells are joined together along their length by connecting tabs welded to the square tube faces. This forms the cells in each rack into a continuous structure.

The rack pedestals are adequate in size and number to ensure that the rack structure is stable, thus minimizing tilting, and to equally distribute and minimize the resulting bearing loads onto the pool liner and floor. The pedestals also provide threaded connections to ensure the overall rack module levelness during installation, thus minimizing any load eccentricities and imbalances. The rack design is stable against tipping. Each stored fuel assembly is completely surrounded by a relatively close fitting box.

9.1.2.1.10 Fuel Pool Leakage Prevention

The spent fuel storage pool (SFP) and refueling canal shall have provisions, such as a watertight liner, to prevent leakage of pool water.

A stainless steel liner is provided. The spent fuel racks are designed to limit local mechanical loadings on the pool liner to prevent damage to the liner.

9.1.2.1.11 Depth of Water Over Fuel

The fuel storage pool minimum depth shall be determined by dose considerations at the top of the pool considering irradiated fuel or components stored in the pool or in transit and radioactive contaminants in the pool water.

The top of the fuel assemblies stored in the spent fuel storage racks are approximately 26 ft below the surface of the water. A radiological evaluation of the rack design is presented in Section 9.1.2.6.

9.1.2.1.12 Fixed Neutron Poisons

Fuel storage racks using nuclear poisons additional to those inherent in the structural materials shall be designed and fabricated in a manner to prevent inadvertent removal of the additional poisons by mechanical or chemical action. Prior to installation of the additional nuclear poisons, the quantity and effectiveness of the additional poisons shall be verified. Effectiveness of the additional poisons may be checked by isotopic analysis. Provisions shall be made to permit periodic inspection or verification or both, thereafter.

Both borated stainless steel (BSS) and Boraflex are used as neutron absorber materials in the storage racks. BSS fixed absorber plates are provided in the region 2 type 2 and region 1 type 3 racks of the spent fuel pool (SFP). The BSS was specified as ASTM A887-89, grade B, type B6/B7, with a minimum boron content of 1.70%. BSS has an exceptional resistance to corrosion by electrolytic hydridation, oxidation, or other chemical reactions in borated and pure water. There are no significant changes to the mechanical properties of the BSS upon exposure to the levels of irradiation encountered over the design life of the fuel storage racks.

The BSS plate is a free standing member in the type 2 and type 3 rack designs. The BSS is neither bent nor welded in these racks which precludes any cracking or thermal alteration of the metal.

Boraflex fixed absorber material is provided in the region 2 type 1 racks of the spent fuel pool (SFP). The absorber assemblies are welded in place in each storage cell, thus precluding inadvertent mechanical removal.

To address concerns with Boraflex degradation as presented in Generic Letter 96-04 (*Reference 15*), Ginna Stationm performed tests in February 1998 of the B-10 areal density of 24 representative Boraflex panels in region 2 of the spent fuel pool (SFP) using the Boron Areal Density Gauge for Evaluating Racks (BADGER). During the testing, degradation beyond the four inch gap assumption of the criticality analysis was noted on selected Boraflex panels. This data indicated that some panels had undergone dissolution beyond expected levels and placed the spent fuel pool in an unanalyzed condition.

This event and the results of the associated assessment that was performed were reported to the NRC in *Reference 10*. In addition, the Technical Specifications were changed to ensure

that controls were in place to verify at least 2300 ppm of soluble boron was maintained in the spent fuel pool (SFP).

A subsequent criticality analysis (Section 9.1.2.4) was performed without crediting any Boraflex in the Region 2, Type 1 racks (*Reference 60*). This analysis demonstrated that a soluble boron concentration of 975 ppm, based on a B-10 isotropic fraction of 0.197 for recycled boron, was necessary to maintain $k_{EFF} \leq 0.95$ under normal and accident conditions. The Technical Specifications retained the control that at least 2300 ppm of soluble boron be maintained in the spent fuel pool. The 2300 ppm ensures that there is sufficient time to detect and mitigate any postulated dilution event before the concentration of soluble boron is diluted to 975 ppm. A boron dilution analysis (*Reference 61*) demonstrated that the volume necessary to dilute from 2300 ppm to 975 ppm was 183,000 gallons. Based on this analysis, any postulated dilution event is not credible. Plant Uprate performed in 2006 has no impact on this boron dilution analysis.

9.1.2.1.13 Bearing Loads on Pool Liner

Provisions shall be made to accommodate the necessary heavy equipment loads in the fuel storage pool without subjecting the pool liner to mechanical damage.

The bearing loads on the pool liner are low and will not cause mechanical damage to the liner.

The spent fuel storage facility should be designed to Seismic Category I requirements. The spent fuel pool (SFP) and spent fuel racks are designed to Seismic Category I requirements.

9.1.2.2 Description

9.1.2.2.1 Spent Fuel Pool (SFP)

The spent fuel pool (SFP) is a Seismic Category I design, reinforced-concrete structure located in the west end of the auxiliary building. The spent fuel pool (SFP) is totally clad with stainless steel. The spent fuel pool (SFP) contains approximately 255,000 gallons of water (*Reference 27*), which is maintained borated to at least a 2300-ppm concentration. A leak chase system under the floor liner plate minimizes the chances of accidental drainage, and the weir gate access to the refueling canal has a high sill to prevent inadvertent drainage through the canal from uncovering the stored fuel assemblies.

The normal makeup water sources to the spent fuel pool (SFP) are from the refueling water storage tank (RWST) or one of the chemical and volume control system holdup tanks. The minimum required refueling water storage tank (RWST) water volume is 300,000 gal. The refueling water storage tank (RWST) capacity is approximately 338,000 gal. Water is supplied from the refueling water storage tank (RWST) by the refueling water purification pump to the spent fuel pool (SFP) purification system to the spent fuel pool (SFP). Alternative sources of makeup water are available from the primary water treatment plant and the reactor makeup water tank or the monitor tanks.

The spent fuel pool (SFP) water leak collection system consists of channels in the concrete pool floor which are designed to collect any water that may leak through the stainless steel liner. Leakage is directed to a collection tank, leading to the liquid waste processing system.

9.1.2.2.2 Spent Fuel Storage Racks

The spent fuel pool (SFP) capacity is discussed in Section 9.1.2. Vertical storage racks are seated on the pool floor and cover the entire area except for a section in the southeast corner reserved for fuel shipping cask loading operations. Control rods are stored in the fuel assemblies. The new fuel elevator is located at the northeast corner and is used to lower new fuel elements into the spent fuel pool (SFP) for transfer to the reactor.

The storage pool is divided into two regions that may contain either intact fuel assemblies or consolidated fuel canisters. The inherent strength of the rack designs results from their honeycomb box structure arrangement. The rack assemblies are made up of a repeating array of square stainless steel boxes in a checkerboard arrangement. Region 1 allows fresh fuel storage with a combination of a fixed neutron absorber, flux traps, and a checkerboard arrangement of fresh and burned fuel assembles. Lead-in funnels are provided on some cells that are allowed to contain fresh fuel. Region 2 rack types ensure criticality safety with a combination of fixed neutron absorbers, burnup credit, and a checkerboard arrangement of burned fuel assemblies. The checkerboard arrangements are set forth in Technical Specification LCO 3.7.13. No lead-in funnels are provided in any cell in region 2. In both regions, the lower end of each box contains a horizontal plate, with a circular hole in the center, both to position the spent fuel assembly or consolidated fuel canister and to allow cooling water flow.

Region 1 contains five modules of the rack design designated as type 3. The boxes forming the rack cells are joined at the corners in a checkerboard arrangement to create an array with a nominal 9.23 in. center-to-center pitch. Each cell formed by the box array contains a borated stainless steel insert with an approximate 8.14 in. square inner dimension. The insert is positioned vertically to span the active fuel region of the fuel assemblies. Eight horizontal belts on alternate borated stainless steel (BSS) cells maintain a water gap between the BSS cells to provide a flux trap for slowing neutrons between the BSS absorber plates. Region 1 provides storage locations for 144 fresh, 145 burned, and 5 damaged (bowed) assemblies (see Figure 9.1-3). Either fresh or burned assemblies may be stored in these locations, as long as a fresh/burned checkerboard configuration is maintained for the fresh fuel assemblies.

Upon completion of phase 1 of the re-rack in 1998, region 2 contains two different rack designs designated as types 1 and 2 for the storage of burned fuel. All rack types are formed with stainless steel boxes. The type 1 racks are the high-density fixed absorber racks which were converted in 1984. This type of rack has an approximate 8.11 in. square inner dimension with two Boraflex panels per cell. Six type 1 modules (140 cells/module) provide 839 storage locations (840 cells less 1 capped cell) for storage of burned fuel assemblies or canisters with burned fuel rods. The type 2 racks are high-density free-standing racks with borated stainless steel (BSS) plates as the fixed absorbers. This type of rack is fabricated with stainless steel cells joined at the corners, with BSS inserts in every other cell. Two type 2 modules provide 187 storage locations for burned fuel assemblies or canisters with burned fuel rods.

The phase 1 re-rack in 1998 installed the type 2 and 3 racks to augment the storage remaining in the type 1 racks. Thus, as of 1998 the pool contains six type 1 modules, two type 2 modules, and five type 3 modules for a total of 1321 storage cells.

9.1.2.3 Design Evaluation

The original spent fuel storage racks provided capacity for the storage of 210 fuel assemblies. In 1976, the NRC approved the replacement of the original racks with higher density flux trap type racks (*References 1* and *2*). This expanded the storage capability from 210 to 595 fuel assemblies. In the submittal to the NRC, a nuclear criticality analysis was made assuming a fuel assembly design enriched to 3.5 wt % of Uranium-235. This criticality analysis was applicable to the previously delivered Westinghouse fuel.

With the fuel reload of 1984, fuel assemblies of a Westinghouse design incorporating axial natural uranium blankets were used. This change in design, along with the adoption of low radial leakage fuel management, requires central region enrichments in excess of the 3.5% used in the analysis of *Reference 1*.

In 1984, the NRC approved the conversion of six flux trap type racks to high-density fixed poison type racks (*References 3* and *4*). This further expanded the storage capacity from 595 to 1016 fuel assemblies and resulted in a two-region spent fuel pool (SFP).

In 1983, the NRC approved a new analysis which assumes an unirradiated fuel assembly enrichment of 4.25 wt % Uranium-235 (*References 6* and *28*). The analysis did not include any changes to the storage rack or pool design.

In 1985, NRC approval was received for the use of consolidated fuel canisters (*Reference 29*). In 1996, NRC approval was received to store unirradiated fuel assemblies with integral burnable poisons with up to a nominal 5.0 w/o U-235, provided the K_∞ is ≤ 1.458 (*References 26* and *30*).

In 1998, NRC approval was received for re-racking portions of the spent fuel pool (*Reference 38*). This included replacement of the three region 1 flux trap racks with two types of high-density fixed neutron absorber type racks. In addition, the approval allowed attachment of similar high-density fixed neutron absorber type racks to the north and south faces of the Boraflex neutron absorber racks that constituted region 2 prior to the approval. The installation of the new high-density racks was planned in two phases. In 1998, phase 1 added five rack modules to create region 1 for storage of fresh fuel and two additional rack modules to augment region 2. This modification increased the number of usable cells from 1015 to 1320 (one additional cell is capped). The phase 2 attachment of the remaining six high-density rack modules to the Boraflex racks in region 2 will be done in the future as needed.

9.1.2.4 Nuclear Analysis

9.1.2.4.1 Methods of Analysis

The criticality calculation method and cross-section values are verified by comparison with critical experiment data for fuel assemblies similar to those for which the racks are designed. This benchmarking data is sufficiently diverse to establish that the method bias and uncertainty will apply to rack conditions which include strong neutron absorbers, large water gaps and low moderator densities.

New Fuel Storage Rack

The design method that insures the criticality safety of fuel assemblies in the new fuel storage rack was described in the application for the 1996 enrichment upgrade (*Reference 31*). This design method uses the AMPX (*References 7* and *8*) system of codes for cross-section generation and KENO Va (*Reference 9*) for reactivity determination.

The 227 energy group cross-section library that is the common starting point for all cross-sections used for the benchmarks of KENO Va and the KENO Va storage rack calculations is generated from ENDF/B-V (*Reference 7*) data. The NITAWL (*Reference 8*) program includes, in this library, the self-shielded resonance cross-sections that are appropriate for each particular geometry. The Nordheim Integral Treatment is used. Energy and spatial weighting of cross-sections is performed by the XSDRNPM (*Reference 8*) program which is a one-dimensional S_n transport theory code. These multigroup cross-section sets are then used as input to KENO Va (*Reference 9*) which is a three dimensional Monte Carlo theory program designed for reactivity calculations.

A set of 44 critical experiments has been analyzed using the above method to demonstrate its applicability to criticality analysis and to establish the method bias and uncertainty. The benchmark experiments cover a wide range of geometries, materials, and enrichments, ranging from relatively low enriched (2.35, 2.46, and 4.31 w/o), water moderated, oxide fuel arrays separated by various materials (B_4C, aluminum, steel, water, etc.) that simulate LWR fuel shipping and storage conditions to dry, harder spectrum, uranium metal cylinder arrays at high enrichments (93.2 w/o) with various interspersed materials (plexiglass and air). Comparison with these experiments demonstrates the wide range of applicability of the method.

The highly enriched benchmarks show that the criticality code sequence can correctly predict the reactivity of a hard spectrum environment, such as the optimum moderation condition often considered in fresh rack and shipping cask analyses. However, the results of the 12 highly enriched benchmarks are not incorporated into the criticality method bias because the enrichments are well above any encountered in commercial nuclear power applications. Basing the method bias solely on the 32 low enriched benchmarks results in a more appropriate and more conservative bias.

The 32 low enriched, water moderated experiments result in an average KENO Va K_{EFF} of 0.9930. Comparison with the average measured experimental K_{EFF} of 1.0007 results in a method bias of 0.0077. The standard deviation of the bias value is 0.0014 ΔK. The 95/95 one-sided tolerance limit factor for 32 values is 2.20. Thus, there is a 95 percent probability with a 95 percent confidence level that the uncertainty in reactivity, due to the method, is not greater than 0.0030 ΔK.

Material and construction tolerance reactivity effects and reactivity sensitivities are determined using the transport theory computer code, PHOENIX (*Reference 11*). PHOENIX is a depletable, two-dimensional, multigroup, discrete ordinates, transport theory code which utilizes a 42 energy group nuclear data library.

Spent Fuel Storage Racks

The analysis methods employ: (1) SCALE-PC, a personal computer version of the SCALE-4.3 code system, as documented in *Reference 53*, with the update SCALE-4.3 version of the 44 group ENDF/B-V neutron cross section library, and (2) the two-dimensional integral transport code DIT, *Reference 54*, with an ENDF/B-VI neutron cross section library.

SCALE-PC is used for calculations involving infinite arrays of storage cells and checkerboarded storage cells depending on the storage features of individual rack types. In addition, it is employed in a full pool representation of the storage racks to evaluate soluble boron worths and postulated accidents.

SCALE-PC modules employed in both the benchmarking analyses and the spent fuel storage rack analyses include the control module CSAS and the following functional modules: BONAMI, NITAWL-II, and KENO V.a. All references to KENO in the text to follow should be interpreted as referring to the KENO V.a module.

The DIT code is used for simulation of in-reactor fuel assembly depletion. The following sections describe the application of these codes in more detail.

Validation of SCALE-PC

Validation of SCALE-PC for purposes of fuel storage rack analyses is based on the analysis of selected critical experiments from two experimental programs. The first program is the Babcox & Wilcox (B&W) experiments carried out in support of Close Proximity Storage of Power Reactor Fuel, *Reference 55*. The second program is the Pacific Northwest Laboratory (PNL) Program carried out in support of the design of Fuel Shipping and Storage Configurations; the experiments of current interest to this effort are documented in *Reference 56*. *Reference 57*, as well as several of the relevant thermal experiment evaluations in *Reference 58*, were found to be useful in updating pertinent experimental data for the PNL experiments.

Nineteen experimental configurations were selected from the B&W experimental program; these consisted of the following experimental cores: Core X, the seven measured configurations of Core XI, Cores XII through XXI, and Core XIIIa. These analyses employed measured critical data, rather than the extrapolated configurations to a fixed critical water height reported in *Reference 55*, so as to avoid introducing possible biases or added uncertainties associated with the extrapolation techniques. In addition to the active fuel region of the core, the full environment of the latter region, including the dry fuel above the critical water height, was represented explicitly in the analyses.

The B&W group of experimental configurations employed variable spacing between individual rod clusters in the nominal 3 x 3 array. In addition, the effects of placing either SS-304 or B/A1 plates of different boron contents in the water channels between rod clusters were measured.

Eleven experimental configurations were selected from the PNL experimental program. These experiments included unpoisoned uniform arrays of fuel pins and 2 x 2 arrays of rod clusters with and without interposed SS-304 or B/A1 plates of different blacknesses. As in

the case of the B&W experiments, the full environment of the active fuel region was represented explicitly.

The approach employed for a determination of the mean calculational bias and the mean calculational variance is based on Criterion 2 of *Reference 59*. The mean calculational bias, the mean calculational variance, and the 95/95 confidence level multiplier are deduced as 0.00259, $(0.00288)^2$, and 2.22, respectively.

Application to Fuel Storage Pool Calculations

As noted above, the CSAS control module was employed to execute the functional modules within SCALE-PC. The CSAS25 control module was used in the majority of the cases to analyze either infinite arrays of single or multiple storage cells or the full spent storage pool.

Standard material compositions were employed in the SCALE-PC analyses consistent with those of *Reference 39*. For fresh fuel conditions, the fuel nuclide number densisties were derived within the CSAS module. For burned fuel representations, the fuel isotopics were derived from the DIT code as described below.

The DIT Code

The DIT (Discrete Integral Transport) code performs a heterogeneous multigroup transport calculation for an explicit representation of a fuel assembly. The neutron transport equations are solved in integral form within each pin cell. The cells retain full heterogeneity throughout the discrete integral transport calculations. The multigroup spectra are coupled between cells though the use of multigroup interface currents. The angular dependence of the neutron flux is approximated at cell boundaries by a pair of second order Legendre polynomials. Anisotropic scattering within the cells, together with the anisotropic current coupling between cells, provide an accurate representation of the flux gradients between dissimilar cells.

The multigroup cross sections are based on the Evaluated Nuclear Data File Version 6 (ENDF/B-VI). Cross sections have been collapsed into an 89 group structure which is used in the assembly spectrum calculation. Following the multigroup spectrum calculation, the region-wise cross sections within each heterogeneous cell are collapsed to a few groups (usually 4 broad groups), for use in the assembly flux calculation. A B1 assembly leakage correction is performed to modify the spectrum according to the assembly in- or out-leakage. Following the flux calculation, a depletion step is performed to generate a set of region-wise isotopic concentrations at the end of a burnup interval. An extensive set of depletion chains are available, containing 33 actinide nuclides in the thorium, uranium and plutonium chains, 171 fission products, the gadolinium, erbium and boron depletable absorbers, and all structural nuclides. The spectrum-depletion sequence of calculations is repeated over the life of the fuel assembly. Several restart capabilities provide the temperature, density and boron concentration dependencies needed for three dimensional calculations with full thermal-hydraulic feedback effects.

The DIT code and its cross section library are employed in the design of initial and reload cores and have been extensively benchmarked against operating reactor history and test data.

For the purpose of spent fuel pool criticality analysis calculations, the DIT code is used to generate the detailed fuel isotopic concentrations as a function of fuel burnup and initial feed enrichment. Each selected set of fuel isotopics is equivalenced to a reduced set of burned fuel isotopics at specified time points after discharge. The latter burned fuel representation includes the following nuclides: ^{235}U, ^{236}U, ^{238}U, ^{239}Pu, ^{240}Pu, ^{241}Pu, ^{149}Sm, ^{16}O, and ^{10}B. The DIT code lists the Samarium-149 isotopics for ^{149}Sm and ^{149D}Sm (a metastable isomer). Since ^{149}Sm is a stable isotope, the concentration of this Samarium isotope is the sum of the individual concentration of these two isomers.

The isotopic number densities from the DIT calculation are base upon Cell average values. The input to KENO calculations require that the number densities be specified for the fuel pellet. Therefore, the number densities from the DIT calculations are scaled by the ratio of area of the cell to the area of the fuel pellet for use in the KENO calculations. The concentration of Boron - 10 is determined by reactivity equivalencing a given DIT cell calculation with a corresponding KENO cell calculation to within the KENO one sigma uncertainty level.

9.1.2.4.1.1 Criticality Methodology

A summary of the methodology follows.

1. Determine the fresh and spent fuel storage configuration of the spent fuel pool using no soluble boron conditions such that the 95/95 upper tolerance limit value of K_{EFF} for the storage pool, including applicable biases and uncertainties, is less than unity.
2. Next, using the resulting storage configuration from the previous step, calculate the spent fuel rack effective multiplication factor with the chosen concentration of spent fuel pool soluble boron present. Then calculate the sum of: (a) the latter multiplication factor, (b) the reactivity uncertainty associated with fuel assembly and storage rack tolerances, and (c) the biases and other uncertainties required to determine the final 95/95 confidence level effective multiplication factor and show that at the chosen concentration of soluble boron, the system maintains the overall effective multiplication factor less than or equal to 0.95.
3. Use reactivity equivalencing methodologies to determine the minimum fuel assembly burnup for fuel assembly enrichments higher than allowed in Step 1, above. As a function of time after discharge and burnup, calculate the reactivity credit due to actinides for each fuel assembly.
4. Determine the increase in reactivity caused by postulated accidents and the corresponding additional amount of soluable boron needed to offset these reactivity increases.

An alternative form of expressing the soluble boron requirements is given in *Reference 50.* The final soluble boron requirement is determined from the following summation:

$$SBC_{TOTAL} = SBC_{95/95} + SBC_{RE} + SBC_{PA}$$

where: SBC_{TOTAL} = total soluble boron credit requirement (ppm),

$SBC_{95/95}$ = soluble boron requirement for 95/95 $K_{EFF} \leq 0.95$ (ppm),

SBC_{RE} = soluble boron required for reactivity equivalencing methodologies

(ppm),

SBC_{PA} = soluble boron required for $K_{EFF} \leq 0.95$ under accident conditions (ppm)

For purposes of the analyses contained herein, minimum burnup limits established for fuel assemblies to be stored in the different types of storage racks do include burnup credit established in a manner which takes into account conservative approximations to the operating history of the fuel assemblies. Variables such as the axial burnup profile as well as the axial profile of moderator and fuel temperatures have been factored into the analyses.

The methodology employed in this analysis for soluble boron credit is analogous to that of *Reference 49* and employs analysis criteria consistent with those cited in the Safety Evaluation by the Office of Nuclear Reactor Regulation, *Reference 50.*

The design input employed in this analysis is basically the same as that employed in the Ginna SFP Reracking Licensing Report, *Reference 39.* However, the current analyses employ a broader scope by implementing the Soluble Boron Credit Methodology, taking credit for the decay of ^{241}Pu, and quantifying the spent fuel storage limits for Region 2, Type 1 and 2 Racks independently. The Soluble Boron Credit Methodology provides additional reactivity margin in the spent fuel storage analyses which may then be used to implement added flexibility in storage criteria and, for example, eliminate the need to implement the degraded boraflex modeling as well as eliminate credit for IFBA in fresh fuel assemblies with enrichments above 4 wt% ^{235}U.

Please note that for the Region 1, Type 3 storage racks, reactivity control is achieved by means of a checkerboard of burned and fresh fuel assemblies having initial enrichments of up to 5.0 wt% ^{235} U(nominal); no Integrated Fuel Burnable Absorber (IFBA) credit for fresh fuel assemblies with nominal enrichments above 4.0 wt% ^{235}U is required. Region 2 accommodates burned fuel assemblies having initial enrichments up to 5 wt% ^{235}U(nominal) at prescribed minimum burnups.

The selection of design basis fuel assembly types was based on an evaluation of the variety of fuel assemblies employed in the reactor to date and selecting the most reactive type for a given evaluation. The candidate fuel assembly types include the Westinghouse Standard, Westinghouse OFA, Mixed Oxide fuel assemblies and other Lead Test Assemblies, as well as the Consolidated Fuel Assembly Canisters and the damaged fuel rod basket.

The selection of the Westinghouse OFA as the design basis fresh fuel assembly is predicated on the fact that this assembly is an optimized design and is more reactive than the Westinghouse Standard in the fresh fuel condition. This result is consistent with the analyses of *Reference 39*; the latter analyses also concluded that the Westinghouse Standard assembly becomes more reactive than the OFA assembly beyond burnups greater than about 12,000 MWD/MTU burnup. Thus, the design basis burned fuel assembly employed for these analyses is taken to be a variant of the Westinghouse Standard fuel assembly because of its burnup characteristics and the fact that it is, in general, more representative of fuel assemblies employed in the past operation of the plant. The design basis burned fuel assembly is taken to be a Westinghouse Standard fuel assembly with the instrument tube replaced by a fuel rod and

the RCC guide tubes made of zircaloy. These changes were simply added conservatisms to assure enveloping of the variety of fuel assemblies that had passed through the core and presently reside in the spent fuel pool.

The reactivity characteristics of the different rack Types 1, 2, and 3 were evaluated using infinite lattice analyses; this environment was employed in the evaluation of the burnup limits versus initial enrichment for each rack type as well as the evaluation of physical tolerances and uncertainties. The full spent fuel pool model was also employed to evaluate soluble boron worths and the reactivity worth of postulated accidents.

9.1.2.4.1.2 Criticality Analysis of Consolidated Rod Storage Canisters in Spent Fuel Racks

The fuel rod consolidation canister is employed to store burned fuel rods removed from multiple, typically two or less, fuel assemblies. The purpose of these canisters is to increase the storage capacity of the pool consistent with the load bearing capability of the pool structure by removing fuel rods from the burned fuel assembly cage structure and storing the rods in the consolidated fuel rod canister at a reduced water to fuel ratio. The base canister model assumed only a square stainless steel can with an outer square dimension of 8.02 in. and a wall thickness of 0.089 in. The upper tolerance value of the outer dimension of the canister and the lower tolerance value of the thickness of the steel enclosure were used to maximize the capacity of the canister. The divider plate was not modeled for conservatism.

The KENO calculations were performed with both the Westinghouse Standard and Westinghouse OFA fuel rods. The pitch of the fuel rods inside the canister was varied to obtain the near-optimum pitch for the canister. The fuel rods were enriched to 1.30 wt% ^{235}U, a conservative value for Region 2 Type 1 cells. The KENO results show the most reactive case occurs when 225 fuel rods from the Westinghouse Standard fuel assembly are optimally spaced in the canister. This value of K_{EFF} is, however, lower than for the case of the design basis spent fuel assembly in a Type 1 cell. It can therefore be concluded that results based on loading design basis spent fuel assemblies in Type 1 cells is bounding and the canisters can be excluded from further treatment. This argument is also extended to other type storage cells in the spent fuel pool so as to permit use of the consolidated canisters in those locations.

These evaluations indicate that the criticality condition is satisfied for storage of consolidation containers in locations for intact spent assemblies. The criticality criterion of 95/95 $K_{EFF} \leq 0.95$ is also met for the fuel rods that satisfy the burnup vs. enrichment curves for either region 1 or 2.

9.1.2.4.1.3 Summary of Criticality Results

Fresh Fuel Racks

The acceptance criteria for criticality requires the effective neutron multiplication factor, K_{EFF}, in the fresh fuel storage rack to be less than or equal to 0.95, including uncertainties, under flooded conditions and less than or equal to 0.98, including uncertainties, under optimum moderation conditions.

The acceptance criteria for criticality is met for the Ginna Fresh Fuel Storage Racks for the storage of both Westinghouse 14x14 OFA and 422 VANTAGE+ fuel assemblies with nominal enrichments up to 5.0 w/o Uranium-235.

Spent Fuel Racks

A summary of the results is as follows:

1. Soluble boron credit methodology was employed to establish a target K_{EFF} value of 0.98051 for the spent fuel pool at zero soluble boron. The allowance for applicable biases and uncertainties was deduced to be 0.01592; thus, the 95/95 upper tolerance limit value of K_{EFF} was deduced to be 0.99643. The total soluble boron requirement for achieving a 95/95 value of $K_{EFF} \leq .095$ was deducted to be the summation of the following three terms: $SBC_{95/95}$ = 377 ppm, SBC_{RE} = 207 ppm, and SBC_{PA} = 381 ppm for a total of 965 ppm. The soluble boron concentration was increased by 1% due to the difference in the ^{10}B atom percent used in the analysis (19.9 a/o) and that measured at Ginna (19.7 a/o). This results in a soluble boron concentration equal to 975 ppm. Note that this soluble boron concentration includes an allowance for 5% burnup uncertainty. In addition, all of the burnup versus enrichment storage curves have been increased by 5%. Therefore, a 5% burnup uncertainty has been double counted.
2. The design basis fuel assembly for the fresh fuel storage cells in the Region 1, Type 3 racks was taken to be a conservative representation of the Westinghouse OFA 14 x 14 fuel assembly having a nominal enrichment of 5 wt% ^{235}U, no IFBA loadings, and the instrument tube location replaced by a fuel rod. The design basis fuel assembly for the burned fuel storage cells in both Region 1 and 2 racks was taken to be a conservative approximation to the Westinghouse Standard 14 x 14 fuel assembly wherein the RCC guide tubes were represented as zircalloy-4 and the instrument tube was replaced by a fuel rod. This conservative approximation to the burned fuel assembly envelops the characteristics of all burned fuel assemblies, including lead test assemblies, currently stored in the spent fuel pool. This design basis burned fuel assembly was represented by an 8-node axial representation of the assembly burnup and applicable fuel and moderator temperatures.
3. All representations of the Region 2, Type 1 spent fuel storage racks, originally containing boraflex inserts between the L-shaped insert and the storage cell tube wall, were represented in both the infinite cell array and full storage pool analyses as having nominal pool water in place of the boraflex.
4. Minimum fuel assembly burnup limits versus fuel assembly initial average enrichment were established for Region 2, Type 2 spent fuel storage cells. These limits were established on both a nominal basis and an equivalent dual tier approach for 0, 5, 10, 15, and 20 years of ^{241}Pu decay so as to provide more efficient utilization of the available spent fuel storage capacity of the storage racks.
5. It was demonstrated that the existing fuel assembly burnup versus initial enrichment criteria established in *Reference 39* are applicable for Region 1, Type 3 cells. These analyses also demonstrated this objective is easily achieved with fresh fuel enrichments of 5 wt% ^{235}U and no requirements for IFBA credit in the fresh fuel assemblies.

It was further established that either a fuel rod consolidation canister or a damaged rod storage basket is less reactive than a fuel assembly of equivalent burnup when placed in a spent fuel storage cell. Consequently, there are no restrictions as to placement of these storage devices in the spent fuel storage cells.

Other items may be stored in the spent fuel pool in addition to fresh or discharged fuel assemblies. These items, in general, fall into the category of Non-Special Nuclear Material (SNM). These items are non-multiplying and, in general, are parasitic to the spent fuel rack local reactivity. Some of the items which fall under this category that can be safely stored in the spent fuel pool are: Dummy Canisters containing Non-SNM, Consolidation Hardware, Dummy Fuel Assemblies, Trash Basket containing full length control rods, etc. The general rule for safely storing these types of items is very simple: any non-multiplying and non-fissile item can be safely stored in any cell location. Note that neutron sources are considered to be non-multiplying and non-fissile.

The analyses contained herein lead to the conclusion that the total soluble boron concentration required to maintain K_{EFF} less than 0.95, after including all biases and uncertainties and assuming the most limiting accident, is less than or equal to 965 ppm (assuming a Boron-10 atomic fraction equal to .199). This latter value is composed of three values:

1. A 377 ppm requirement for $K_{EFF} \leq 0.95$
2. A 207 ppm requirement for reactivity equivalencing methodologies, and
3. A 381 ppm requirement to maintain $K_{EFF} \leq 0.95$ for the most limiting accident condition

The most limiting accident condition was determined to be the misloading of a fresh 5 wt% ^{235}U fuel assembly in the Region 2 Type 1 fuel racks.

Technical Specification defines the limits on storage of spent fuel assemblies versus assembly burnup, initial enrichment, and years of ^{241}Pu decay.

The analytical methods employed in the criticality analysis conform with ANSI N18.2-1973, "Nuclear Safety Criteria for the Design of Stationary Pressurized Water Reactor Plants," Section 5.7 Fuel Handling System; ANSI 57.2-1983, "Design Objectives for LWR Spent Fuel Storage Facilities at Nuclear Power Stations," Section 6.4.2; ANSI 57.3-1983, "Design Requirements for New Fuel Storage Facilities at Light Water Reactor Plants"; ANSI N16.9-1975, "Validation of Calculational Methods for Nuclear Criticality Safety"; and the NRC Standard Review Plan, Section 9.1.2, "Spent Fuel Storage".

As discussed in *Reference 67*, the critical design parameters (fuel pellet diameter and fuel stack height) of the 422 Vantage+ fuel assemblies used for the plant uprate are bounded by the critical parameters used for the Westinghouse Standard 14 x 14 fuel assembly in the design basis criticality analyses. Additionally, the burn-up characteristics of the 422 Vantage+ fuel assembly at 1775 Mwt nominal power level are bounded by the burn-up characteristics used in the analysis for the Westinghouse Standard fuel assembly. Therefore, the pre-uprate criticality analyses for spent fuel remaining bounding.

9.1.2.4.2 Accident Analysis

9.1.2.4.2.1 Fresh Fuel Storage Racks

Under normal conditions, the fresh fuel racks are maintained in a dry environment. The introduction of water into the fresh fuel rack area is the worst case accident scenario. The water flooding cases analyzed in this report are bounding accident situations which result in the most conservative fuel rack K_{EFF}.

Other accidents can be postulated which would cause some reactivity increase (i.e., dropping a fuel assembly between the rack and wall, or dropping an assembly on top of the rack). For these other accident conditions, the double contingency principle is applied. This states that one is not required to assume two unlikely, independent, concurrent events to ensure protection against a criticality accident. Thus, for these other accident conditions, the absence of a moderator in the fresh fuel storage racks can be assumed as a realistic initial condition since assuming its presence would be a second unlikely event.

Experience has shown that the maximum reactivity increase associated with postulated accident (dropping a fuel assembly between the rack and wall, or dropping an assembly on top of the rack) is less than 10 percent ΔK.

Therefore, since the normal, dry fresh fuel rack reactivity is less than 0.55, and the maximum reactivity increase for the postulated accidents is less than 10 percent ΔK, the maximum rack K_{EFF} under these other postulated accidents conditions will be less than 0.95.

9.1.2.4.2.2 Spent Fuel Storage Racks

The soluble boron concentration (ppm) required to maintain K_{EFF} less than or equal to 0.95 under accident conditions is determined by first surveying all possible events which increase the K_{EFF} value of the spent fuel pool. The accident event which produced the largest increase in spent fuel pool K_{EFF} value is employed to determine the required soluble boron concentration necessary to mitigate this and all less severe accident events.

Several fuel mishandling events and one seismic event were simulated to assesss the possible increase in the K_{EFF} value of the spent fuel pool. The fuel mishandling events all assumed that a fresh 5.0 wt % ^{235}U assembly with no IFBAs was mislocated into any cell of the spent fuel pool intended for less reactive fuel assemblies. The seismic event results in the reduction of the gap between all the modules to 0.1 cm. The inter-module gap was originally simulated based on the minimum fabricated values.

A survey of the various fuel mishandling events considered in an earlier analysis (Section 4.3.6, *Reference 39*) indicated that the most disruptive accident would be the misplacement of a fresh fuel assembly with 5.0 wt % ^{235}U in a Type 1 location. Therefore, all the other mishandling events were simulated with equivalent fresh fuel assemblies in all the cells; this event was simulated with burnt fuel assemblies occupying the Region 2 Type 1 and Type 2 locations. The various mishandling accidents (including the location) were simulated and the calculated K_{EFF} values were compared.

The calculations determined that the highest worth of a fuel mishandling event is based on a misloading in the Type 1 racks with a worth of 5.953% delta K_{EFF}. The soluble boron concentration (ppm) necessary to compensate for this reactivity insertion is conservatively calculated to be 381 ppm.

As noted above, the misplaced fuel assembly was cited in *Reference 39* as being the most adverse postulated mishandling event. Other dropped assembly events such as, for example, the postulated Rack Type 2 T-bone fuel assembly accident configuration and the postulated deep drop type accidents, have little effect on the local K_{EFF} of the spent fuel storage rack as indicated by the analyses cited in Table 4.3-14 of *Reference 39*. In the case of the T-bone accident, the delta K_{EFF} resulting from a fuel assembly lying on top of the storage rack is quite minimal due to the relatively large separation distance between the top of the fuel columns for the assemblies standing vertical in the storage rack and the fuel assembly lying across the top of the rack. In the case of the postulated deep drop accident, the deflection of the base plate is limited by the height of the pedestals supporting the rack above the concrete floor and the structural design of the rack. A significant fraction of the base plate deflection distance would be taken up by the fuel assembly structure below the active fuel columns. Thus, one would again conclude the misplaced fuel assembly accident overshadows the reactivity insertion resulting from the postulated deep drop event.

9.1.2.5 Thermal-Hydraulic Analysis

The evaluation of the heat removal criteria of the spent fuel pool (SFP) cooling system is presented in Section 9.1.3.4.

9.1.2.6 Radiological Evaluation

The principal source of radiation levels observed at the surface of the spent fuel pool (SFP) water is due to the concentration of radionuclides within the pool water. This has been verified by calculations. The observed dose rate has been typically less than 20 mrem/hr. The radionuclides are removed from the water by the spent fuel pool (SFP) demineralizer with the need for changing the demineralizer resin determined by the demineralizer Decontamination Factor (DF), radiation levels, or the pressure drop across the demineralizer. Increased fuel storage may result in an increased frequency of changing the demineralizer resin, but is not expected to result in any increase in the radionuclide concentrations or in subsequent radiation levels at the surface of the water. As dose rates show a very weak relationship to the amount of fuel stored in the pool, the increase in fuel storage capacity due to the use of consolidated fuel canisters will not affect the station's ability to maintain individual occupational doses within the limits of 10 CFR 20.

The top of the fuel assemblies stored in the spent fuel storage racks are approximately 26 ft below the surface of the water. The 26-ft water shield reduces the direct radiation from the stored fuel assemblies to values that are negligible when compared to background.

The extent of damage that might result to a fuel assembly during fuel handling and the radiological consequences of such an event are discussed in Section 15.7.

9.1.2.7 Radiological Consequences of Tornado Missile Accident (TMA)

Previous analyses (*References 12*, *44* and *66*) and evaluations (*Reference 65*) performed for the original 1998 re-rack modification identified that a tornado missile impact of spent fuel assemblies in Region 1 of the spent fuel pool resulted in the limiting control room and off-site radiological consequences. Subsequent to the spent fuel pool re-rack in 1998, the tornado missile analysis (*Reference 71*) was revised (per *References 72* and *73*) using Alternate Source Term methodology as part of the installation of the control room emergency air treatment system (CREATS) in 2004. The control room dose for the TMA was re-analyzed as part of the control room emergency air treatment system (CREATS) upgrade modification to reflect the new configuration. For consistency the atmospheric dispersion factors (X/Q) and off-site doses were also re-analyzed. The resulting radiological consequences were analyzed (*Reference 69*) and evaluated (*Reference 70*). As part of the plant uprate the limiting tornado missile accident radiological consequences due to uprate were re-analyzed using Alternate Source Term methodology (*Reference 67*) and evaluated by the NRC (*Reference 68*).

The tornado missile accident assumed that a hypothetical tornado missile representing a 1490 pound wooden pole, 35 feet in length and 13.5 inches in diameter, propelled by the wind, penetrates the auxiliary building roof. Since the pool is divided into two regions, it is possible that the hypothetical tornado missile can impact and damage up to nine fuel assemblies in either region. For uprate, the missile is assumed to impact nine fuel assemblies in Region 1 of the spent fuel pool (five fuel assemblies decayed for 100 hours and four fuel assemblies decayed for 60 days) which represents the limiting condition for radiological releases. Neither control room isolation nor re-circulating filtration are conservatively assumed. The major assumptions and parameters used in this analysis are summarized in Table 9.1-2.

The resulting offsite and control room doses due to the tornado missile accident occurring in region 1 are shown in Table 9.1-5.

9.1.2.8 Radiological Consequences of a Dropped Consolidated Canister

A consolidated canister can contain all of the fuel rods from two assemblies and is considered a heavy load per NUREG-0612 criteria. There are established controls which govern the movement of the canisters in the spent fuel pool (SFP). The canisters will be lifted using a single-failure proof crane and a single-failure proof lifting system and will be handled in accordance with the guidelines in NUREG-0612 with regard to limiting the chance of an unacceptable heavy load drop. This action will prevent potential fuel damage and the subsequent release of fission products. Thus, the offsite radiological consequences need not be determined for this accident.

9.1.3 SPENT FUEL POOL COOLING

9.1.3.1 Design Bases

The spent fuel pool (SFP) cooling system is designed to remove from the spent fuel pool (SFP) the heat generated by stored spent fuel elements. Piping is so arranged that failure of any pipeline does not drain the spent fuel pool (SFP).

The heat removal criteria of the spent fuel pool (SFP) cooling system are that the system should be capable of maintaining the spent fuel pool (SFP) temperature less than or equal to 120°F during normal refueling operations and less than or equal to 150°F during full core discharge situations. The 120°F is not a safety requirement but is a limit set for operator comfort during refueling operations. As discussed in UFSAR Section 9.1.3.4.1.7, it is possible that the 120°F administrative limit may be exceeded for a short period of time at the beginning of a normal refueling off-load. For structural integrity reasons, the pool water temperature is not to exceed 180°F ***(Reference 76)***. In order to provide sufficient time to take corrective action in the event of spent fuel pool (SFP) cooling system failure, the pool temperature limit is not to exceed 150° for all modes of operation including a full core discharge.

Normal refueling operations are conducted approximately every 18 months and are defined for the purpose of these criteria as having approximately 45 fuel assemblies (one-third of the core) being removed from the core and placed in the spent fuel pool (SFP).

Full core discharge occurs when all the fuel in the reactor (121 fuel assemblies) is placed in the spent fuel pool (SFP). The full core will be discharged once every 10 years for inservice inspection. Full core discharge may also occur on other occasions when it is deemed necessary, i.e., full core discharges may occur several times during a 10 year inservice inspection interval.

The spent fuel pool (SFP) cooling system consists of three SFP pumps, two installed SFP heat exchangers, one SFP standby heat exchanger (which is not normally installed), and associated piping, valves, and hoses. Five (5) spent fuel pool (SFP) cooling loop options, as listed in the Technical Requirements Manual (TRM), are available, provide 100% cooling capability (under normal and refueling operation). These SFP cooling loop options are:

1. SFP Loop A (normal)
2. SFP Loop B
3. SFP Standby Loop (normal)
4. SFP Loop A (cross-connect)
5. SFP Standby Loop (cross-connect)

The flow path starts at the common suction from the spent fuel pool to the three SFP pumps, through one or more SFP pumps and one or more SFP heat exchangers, and to the spent fuel pool via the common return line. The primary loop (SFP Loop B) is made up of the SFP pump B, SFP heat exchanger B, and piping. The backup loops include:

a. installed SFP Loop A with the SFP pump A, SFP heat exchanger A, and piping, and
b. a SFP Standby Loop with the SFP standby pump, SFP standby heat exchanger, and hoses.

There is also the ability to align the SFP Pump A and SFP standby Pump individually or in parallel to the SFP Heat Exchanger B. Service water (SW) circulates through the shell while SFP water circulates through the tubes of the SFP heat exchangers. There is also the ability to provide fire water for cooling of the SFP heat exchanger A and SFP standby heat exchanger.

SFP Loop B is designed to maintain the spent fuel pool (SFP) water below 150°F with a safety basis heat load of 16 x 10^6 Btu/hr. It is also designed to maintain the spent fuel pool (SFP) water below 120°F with a normal basis heat load of 7.6 x 10^6 Btu/hr. Adequacy of the cooling capability for normal and full core off-loads after 1999 is discussed in Section 9.1.3.4.1. SFP heat exchanger B is sized to remove the safety basis and normal basis heat loads.

SFP Loop A and SFP Standby Loop are each designed to remove a normal basis heat load of 5.3 x 10^6 Btu/hr with a pool temperature of 120°F and service water (SW) at 80°F. At a 150°F pool temperature, SFP heat exchanger A or SFP standby heat exchanger are each capable of removing 7.93 x 10^6 Btu/hr with an 80°F service water temperature. They are each capable of removing the normal basis heat load. When SFP Loop A and SFP Standby Loop are operated in parallel, they are capable of removing the safety basis heat load.

The ratings of each cooling loop are shown in Table 9.1-3.

Impact of 85°F Lake Temperature

Increasing the maximum lake temperature from 80°F to 85°F results in decreasing the heat removal capability of all three spent fuel pool (SFP) loops. As discussed in *Reference 45*, the loop 2 heat removal capability would decrease by approximately 1.2 x 10^6 Btu/hr at 85°F when compared to the 80°F heat removal capability. The corresponding decrease in the loop 1 and loop 3 heat removal capability would be approximately 0.65 x 10^6 Btu/hr for each loop. These changes result in decreasing SFP heat removal capability by approximately 8% for a 150°F spent fuel pool (SFP) temperature.

During normal plant operation the decrease in SFP heat removal capability associated with an 85°F maximum lake temperature would result in either an increase in service water (SW) flow to the SFP heat exchangers or a slight increase in SFP temperature. Since SFP temperatures typically are maintained well below 120°F during normal plant operation, any increase in SFP temperature would be acceptable. During a full core off-load refueling outage, the decrease in SFP heat removal capability associated with an 85°F lake temperature would have no impact on SFP temperature. As discussed in Section 9.1.3.4.1.8, the minimum required reactor shutdown time before performing a full core off-load is cycle-specific based upon SFP total heat load and a bounding assessment of expected lake temperature. Consequently, performing a full core off-load coincident with lake temperatures approaching 85°F would result in increasing the required shutdown time prior to initiating the full core off-load.

9.1.3.2 System Design and Operation

9.1.3.2.1 System Design

The spent fuel pool (SFP) cooling system is shown in Drawing 33013-1248.

The spent fuel pool (SFP) cooling system removes residual heat from fuel stored in the spent fuel pool (SFP). The system is normally required to handle the heat load from one-third of the core freshly discharged from the reactor, plus that stored from previous refuelings, and it

can safely accommodate the heat load from a full core discharge plus that stored from previous refuelings.

The spent fuel pool (SFP) is located outside the reactor containment and is not affected by any loss-of-coolant accident in the containment. The water in the pool is separated from that in the refueling canal by a removable weir gate. Only a very small amount of interchange of water occurs as fuel assemblies are transferred between containment and the SFP.

The spent fuel pool (SFP) cooling system is described in Section 9.1.3.1. Components are described in Section 9.1.3.3. SFP heat exchanger B is supplied service water (SW) from one section of the service water (SW) loop header. SFP heat exchanger A and SFP standby heat exchanger (when installed) are supplied service water (SW) from another section of the service water (SW) loop header. Motor-operated valves provide automatic and remote manual isolation of the service water (SW) supply to the SFP heat exchangers and the component cooling water heat (CCW) exchangers. These motor-operated valves are automatically isolated on a safety injection (SI) signal concurrent with an associated 480-V safeguards bus undervoltage condition. Handwheels are provided for manual operation. Radiation detectors, alarms, and recorders are provided to detect radioactivity in the service water (SW) in the event that tube leaks occur in SFP heat exchanger A or SFP heat exchanger B. Normally locked closed manual valves can be opened to align the service water (SW) flow from one section of the service water (SW) loop header to a desired SFP heat exchanger when performing maintenance on another section of the SW loop header.

9.1.3.2.2 System Operation

Operation of the spent fuel pool (SFP) cooling system is manual. Control for all three spent fuel pool (SFP) cooling pumps is from local control stations near the pumps. An electrical interlock prevents simultaneous operation of the spent fuel pool (SFP) pumps A and B, which are supplied from 480-V safeguards buses. SFP pump A is operated from MCC 1C. MCC 1C is supplied from 480-V safeguards bus 14. SFP pump B is operated from 480-V safeguards bus 16. Normally either SFP pump A or SFP pump B is operated alone to maintain the desired pool temperature. The spent fuel pool (SFP) standby pump, when connected is supplied from a temporary power source at MCC 1C. The temporary electrical power source for the SFP standby pump may be varied to provide for increased redundancy.

Following a safety injection signal, spent fuel pool (SFP) pump B, if operating, will be shed from 480-V safeguards bus 16. After reset of safety injection, spent fuel pool (SFP) pump B can be manually started.

Following a safety injection signal with loss of offsite power (1A diesel generator output breaker closed), spent fuel pool (SFP) pump A and spent fuel pool (SFP) standby pump, if operating, will be shed from MCC 1C. After reset of safety injection and reset of the MCC 1C load shed device, spent fuel pool (SFP) pump A and spent fuel pool (SFP) standby pump can be manually started.

In the event of spent fuel pump shedding, the cooling of the spent fuel pool (SFP) water will be interrupted and the water temperature will increase as indicated in Section 9.1.3.4.3 until cooling is restored.

The clarity and purity of the spent fuel pool (SFP) water is maintained by passing approximately 60 gpm of the flow through a filter and demineralizer.

In the event of low water level in the spent fuel pool (SFP), a level switch will trip loop 2 spent fuel pool (SFP) pump B. The switch actuates at elevation 275 ft-11.5 in., which is approximately 2 ft below the top of the spent fuel pool (SFP) and approximately 2 ft above the pump upper suction line. To protect against the possibility of complete loss of water in the spent fuel pool (SFP), the upper suction line penetrates the spent fuel pool (SFP) near the top of the pool. The lower suction line penetrates the spent fuel pool (SFP) approximately 5 ft-4 in. above the top of the fuel racks to preclude the possibility of draining the pool and to ensure a minimum water level of 5 ft-4 in. above the top of the fuel. See Figure 9.1-7

The spent fuel pool (SFP) cooling water return line, which terminates at the bottom of the spent fuel pool (SFP), contains an 0.25-in. vent hole near the normal spent fuel pool (SFP) water level so that the pool water cannot be siphoned.

9.1.3.2.3 Suction Lineup Using Spent Fuel Pool (SFP) Pump A

When spent fuel pool (SFP) pump A is in operation by itself, it is normally lined up to the upper spent fuel pool suction with the lower suction line isolated. For off normal conditions where the pool level is temporarily lowered (such as maintenance, transfer slot filling evolutions or emergency conditions), operation using the lower suction has been evaluated (*Reference 34*). This configuration has been shown to be acceptable as long as the spent fuel pool is maintained at an elevation greater than 261 ft and the pool temperature is less than 150°F. This evaluation involved a test which showed that spent fuel pool stratification is negligible when SFP pump A is operating on the lower suction.

9.1.3.3 Spent Fuel Pool (SFP) Cooling System Components

Table 9.1-4 lists the spent fuel pool (SFP) cooling system component data.

9.1.3.3.1 Spent Fuel Pool (SFP) Heat Exchangers

The spent fuel pool (SFP) heat exchangers are of the shell and U-tube type with the tubes welded to the tubesheet. Service water (SW) circulates through the shell, and spent fuel pool (SFP) water circulates through the tubes. The tubes are austenitic stainless steel and the shells are carbon steel.

9.1.3.3.2 Spent Fuel Pool (SFP) Pumps

The spent fuel pool (SFP) pumps circulate water in the spent fuel pool (SFP) cooling system to accomplish the heat removal function. All wetted surfaces of the pumps are austenitic stainless steel or equivalent corrosion resistant material. The pumps are operated manually from local stations. Spent fuel pool (SFP) pump A and spent fuel pool (SFP) standby pump, if connected and operating, are automatically shed from MCC 1C following a safety injection signal, with a loss of offsite power (1A diesel generator output breaker closed). Spent fuel pool (SFP) pump B, if operating, is automatically shed from 480-V safeguards bus 16 following a safety injection signal.

9.1.3.3.3 Spent Fuel Pool (SFP) Filter

The spent fuel pool (SFP) filter removes particulate matter larger than 5 microns from the spent fuel pool (SFP) water. The filter cartridge is of synthetic fiber and the vessel shell is austenitic stainless steel.

9.1.3.3.4 Spent Fuel Pool (SFP) Strainer

A stainless steel strainer is located at the upper inlet of the spent fuel pool (SFP) suction line for removal of relatively large particles, which might otherwise clog the spent fuel pool (SFP) demineralizer.

9.1.3.3.5 Spent Fuel Pool (SFP) Demineralizer

The demineralizer is sized to pass approximately 60 gpm to provide adequate purification of the fuel pool water for unrestricted area access to the working area, and to maintain optical clarity.

9.1.3.3.6 Spent Fuel Pool (SFP) Skimmer

A skimmer pump and filter are provided for surface skimming of the spent fuel pool (SFP) water.

9.1.3.3.7 Spent Fuel Pool (SFP) Valves

Manual stop valves are used to isolate equipment and lines, and manual throttle valves provide flow control. Valves in contact with spent fuel pool (SFP) water are austenitic stainless steel or equivalent corrosion-resistant material. Motor-operated valves are used to isolate service water (SW) flow to the spent fuel pool (SFP) heat exchangers. They have remote manual control from the control room and close automatically upon coincidence of safety injection and loss of offsite power (normal feed breaker to bus 14/16 open coincident with safety injection).

9.1.3.3.8 Spent Fuel Pool (SFP) Piping

All piping in contact with spent fuel pool (SFP) water is austenitic stainless steel. The piping is welded except where flanged connections are used at the pump, heat exchanger, and filter to facilitate maintenance. The hoses from the SFP Standby Loop to the spent fuel pool (SFP) piping and the service water (SW) piping are styrene butadiene rubber or equivalent.

9.1.3.4 System Evaluation

9.1.3.4.1 Thermal-Hydraulic Analysis

9.1.3.4.1.1 Heat Removal Requirements

The heat removal criteria of the spent fuel pool (SFP) cooling system are given in Section 9.1.3.1 and are that the system should be capable of maintaining the spent fuel pool (SFP) temperature less than or equal to 120°F during typical normal refueling operations and less than or equal to 150°F during full core discharge situations. Depending on the lake tempera-

ture and off-load time for a normal refueling outage, spent fuel pool (SFP) temperature may exceed 120°F for a short time period.

9.1.3.4.1.2 Service Water Temperature

The spent fuel pool (SFP) heat exchanger transfers heat from the spent fuel pool (SFP) water to the service water (SW). The service water (SW) system is discussed in Section 9.2.1.

The temperature of the service water (SW) going into the spent fuel pool (SFP) heat exchanger is a controlling factor in determining the heat transfer capability of the spent fuel pool (SFP) cooling system. The service water (SW) temperature is approximately the same as the intake (lake) water temperature except during the winter months when recirculation is used as necessary to moderate the service water temperature.

The intake water temperature has been recorded since December 1969. The data through the end of 1975 showed the following:

1. The instantaneous daily maximum temperature exceeded 80°F three times and then only by a maximum of 2°F.
2. The monthly average of the daily maximum temperatures had not exceeded 75°F.
3. The monthly average of the daily average temperatures had not exceeded 73°F.

The data from 1978 through 1988 confirmed items 1, 2, and 3 above with no occurrence of the daily maximum temperature exceeding 80°F. The service water (SW) temperature to the inlet of the spent fuel pool (SFP) cooling system heat exchanger can therefore be assumed to be 80°F or less. See Section 9.1.3.1 for a discussion of the current maximum service water (SW) temperature.

9.1.3.4.1.3 Analysis of Heat Removal System

The spent fuel pool (SFP) cooling system is described in Section 9.1.3.1. Water is drawn from the spent fuel pool (SFP) by the spent fuel pool (SFP) pump, forced through the heat exchanger, and returned to the spent fuel pool (SFP). The heat exchanger is cooled by the service water (SW). Approximately 60 gpm of the water from the spent fuel pool (SFP) bypasses the heat exchanger and is passed through a demineralizer and filter.

The design capabilities of the spent fuel pool (SFP) cooling system were calculated for 120°F and 150°F (maximum normal pool temperature). For SFP heat exchanger A and SFP standby heat exchanger, a service water (SW) flow of 700 gpm at 80°F was assumed with a spent fuel pool (SFP) outlet flow of 610 gpm and with only 550 gpm flowing through the spent fuel pool (SFP) cooling system heat exchanger. Under these conditions, the heat exchanger, with design fouling, will transfer 5.3×10^6 Btu/hr with a spent fuel pool (SFP) outlet temperature of 120°F and 7.93×10^6 Btu/hr with a spent fuel pool (SFP) outlet temperature of 150°F. For SFP heat exchanger B, a 1600-gpm service water (SW) flow at 80°F was assumed with a spent fuel pool (SFP) outlet flow of 1200 gpm passing through spent fuel pool (SFP) heat exchanger B. Under these conditions the heat exchanger will transfer 16×10^6 Btu/hr with a spent fuel pool (SFP) outlet temperature of 150°F. For SFP heat exchanger B, with a service

water (SW) flow of 1000 gpm, pool water temperature of 120°F, pool water flow of 1200 gpm with 1140 gpm through the heat exchanger, the heat exchanger will transfer 7.6 x 10^6 Btu/hr. The ratings of each cooling loop are shown in Table 9.1-3.

The heat removal requirements are 7.6 x 10^6 Btu/hr normal-basis heat load and 16 x 10^6 Btu/hr safety-basis heat load (see Section 9.1.3.1).

9.1.3.4.1.4 Cooling Water Flow in Fuel Pool

Water is returned to the spent fuel pool (SFP) from the spent fuel pool (SFP) cooling system heat exchanger through a discharge pipe entering the pool at the west wall. Water enters the spent fuel pool (SFP) cooling system through another pipe located on the south wall. To ensure proper cooling of the fuel assemblies, the discharge pipe is routed along the west wall of the spent fuel pool (SFP). The pedestal and rack baseplate designs provide sufficient cutouts for fluid cooling while ensuring adequate structural strength. Details of the rack baseplate designs are available in *Reference 39.*

9.1.3.4.1.5 Cooling Analysis of Individual Fuel Assemblies

Pre-uprate Analysis

The major cooling mechanism for fuel assemblies stored in the spent fuel pool is natural circulation cooling that is induced by the decay heat generated in the fuel assemblies. The density difference between the hot water in the spent fuel pool racks and the bulk pool water above the racks results in a thermal driving head for establishing water flow through each canister that contains a spent fuel assembly. The water flow through an individual spent fuel canister is determined by balancing the thermal head or buoyancy term for the individual canister with its associated unrecoverable pressure losses due to water flow. The canister thermal head term is determined by the decay heat generation for the stored fuel assembly. The natural circulation pressure losses occur due to frictional losses in the downcomer flow region, turning losses, canister entrance and exit losses, frictional losses for flow past the fuel assembly, and contraction and expansion losses at a number of locations associated with flow at the base of a spent fuel rack, underneath the spent fuel rack and through the cooling holes contained in the rack pedestals.

Due to the different spent fuel rack designs used in the spent fuel pool (e.g. types 1-4) and differences in decay heat limitations between region 1 and region 2 of the spent fuel pool, a number of individual natural circulation cooling analyses were performed to identify the limiting spent fuel canister location and verify adequacy of cooling water flow. Adequate cooling water flow exists for all spent fuel assemblies by demonstrating that the peak cladding temperature and the exiting cooling water temperature for the limiting fuel assembly are both below the boiling water temperature at the discharge of the spent fuel canister. The boiling water temperature limit is 238.9°F which corresponds to the saturation temperature due to the static head associated with 23 feet of water at a bulk temperature of 150°F.

To verify adequate natural circulation cooling water flow to individual spent fuel assemblies the following configurations were analyzed in *Reference 39*:

1. Type 2 rack in region 2
2. Type 3 rack in region 1
3. Type 4 rack in region 2

For each region and rack type, the cooling water flow for the hottest spent fuel assembly was calculated. The maximum fuel clad and water exit temperature were calculated with the following conservative assumptions:

a. Maximize spent fuel assembly decay heat based on bounding fuel enrichment and burn-up
b. Maximize decay heat based on minimum shutdown time of 100 hours for region 1 fuel assemblies and 60 days for region 2 fuel assemblies
c. Maximize canister water exit temperature by assuming a maximum pool bulk temperature of 150°F.
d. Maximize hot assembly decay heat based upon hot channel peaking factor of $F^N_{\Delta H} = 1.75$

The results of the *Reference 39* local fuel assembly natural circulation cooling analyses identified that the limiting fuel assembly was located in a type 3 canister in region 1. The maximum cladding and exiting water temperature for the limiting type 3 canister are 232°F and 222°F respectively. These results are below the 238.9°F boiling temperature for the water at the top of the spent fuel racks. The type 3 canister location was more limiting than the region 2 racks analyzed due to the significantly higher decay heat used for its hot assembly based upon the 100 hour shutdown assumption. Therefore, the natural circulation cooling results for the type 3 racks bound the results for the other three rack types.

Uprate Analysis

Based on the pre-uprate analysis, the limiting hot assembly cooling analysis is for a Type 3 fuel assembly discharged to spent fuel pool region 1 after a 100 hour shutdown time. At 1520 MWt the maximum temperature leaving the hot assembly is 222°F which is below the 238.9°F boiling temperature for water at the top of the spent fuel pool rack. At uprate with a core power level of 1775 MWt, the heat load in the hot assembly at 100 hours after a shutdown would increase proportionally with the change in power level or ~17% (1775 MWt / 1520 MWt). Conservatively ignoring the increase in mass flow through the hot assembly due to the increased heat load, a 17 % increase in assembly decay heat would result in a corresponding 17 % increase in temperature rise across the fuel assembly. The water inlet temperature for the existing hot assembly analysis is 150°F which results in a temperature rise of 72°F for the pre-uprate analysis. Therefore, at uprate the 17 % increase in core power would conservatively result in a hot assembly temperature rise of ~ 85°F (1.17 x 72°F). The resulting water temperature leaving the hot assembly spent fuel pool rack would be ~235°F. Since this temperature is still below the boiling temperature of the water at the spent fuel pool rack location, adequate cooling water is provided to the hot assembly at uprate. In reality, the actual temperature rise across the hot assembly would be less than 85°F. The increase in water outlet temperature results in increased thermal buoyancy in the hot assembly. This increased buoyancy result in a higher mass flow through the hot assembly at uprate and correspondingly a lower water temperature rise.

The increase in water exit temperature leaving the spent fuel rack would also result in an increase in the maximum cladding temperature. The pre-uprate analysis determined that the peak cladding temperature would be approximately 232°F or 10°F higher than the water exit temperature. With the ~13°F increase in water exit temperature at uprate, the maximum clad temperature would also be expected to increase a comparable amount. This would result in the peak clad temperature exceeding the water saturation temperature which would result in the onset of boiling heat transfer. The transition to pool boiling heat transfer from single phase heat transfer would result in an increase in the heat transfer coefficient between the cladding and the bulk water. This would result in a decrease in the required temperature differential between the water and cladding to remove the cladding decay heat. Therefore, the increase in cladding peak temperature would be smaller than the increase in water temperature. The transition to boiling heat transfer could cause the peak cladding temperature to be slightly higher than the water saturation temperature. Since the peak temperature is only slightly higher than the water saturation temperature, adequate cooling of the cladding for the hot assembly at uprate is still being maintained.

9.1.3.4.1.6 Cooling Analysis of Consolidated Fuel Canisters

In addition to the local fuel assembly cooling analysis discussed in Section 9.1.3.4.1.5, *Reference 39* also re-evaluated natural circulation cooling of fuel canisters that contained consolidated fuel rods. The re-analysis assumed that the limiting consolidated canister contained fuel rods from two fuel assemblies (358 fuel rods) with a minimum decay time of 5 years. To maximize decay heat generation, the fuel rods were assumed to have a burn-up of 60 GWD/MTU. The consolidated canister was located in the most limiting position in region 1 of the spent fuel pool (SFP). The resulting peak cladding and water outlet temperatures are 231°F and 222°F, respectively, which are both below the 238.9°F boiling temperature limit at the top of the spent fuel racks. This analysis was based on a fuel assembly decay heat load of 4335 BTU/hr (*Reference 74*) which exceeds the Ginna Technical Specifications Section 4.3.1.1 limit of 2150 BTU/hr for a fuel assembly to be stored in a consolidated canister.

9.1.3.4.1.7 Normal 1/3 Core Off-Load Cooling Capability

For a normal refueling outage, approximately 1/3 of the core is off-loaded to the spent fuel pool (SFP). SFP cooling is typically provided by operating one SFP cooling loop with 100% back-up capability being available by having another SFP cooling loop operable, as defined in the Technical Requirements Manual (TRM). The available SFP cooling system is required to maintain the bulk SFP temperature below 150°F. The actual heat load from irradiated fuel assemblies stored within the SFP is a variable based on the total number of assemblies stored, the power history of the individual assemblies, and the time since the assemblies were last irradiated. The actual heat removal capabilities of each SFP cooling loop are also variables, and the heat removal capabilities are determined by Nuclear Engineering Services based on plant conditions. For a 150°F SFP bulk temperature, SFP Loop B is capable of removing 16 x 10^6 Btu/hr with a service water temperature of 80°F. Although SFP heat exchanger A and SFP standby heat exchanger are each required to remove 7.93 x 10^6 Btu/hr at 150°F SFP temperature, actual heat removal capability for SFP heat exchanger A and SFP standby heat exchanger at this temperature is significantly higher than the design requirement. As dis-

cussed in *Reference 43*, each heat exchanger is capable of removing a minimum of 9.3 x 10^6 Btu/hr for a 150°F SFP temperature and an 80°F service water temperature.

A normal refueling outage occurs approximately every 18 months and is based upon removal of approximately one-third of the 121 reactor core fuel assemblies. For the uprate operating conditions, the typical number of fuel assemblies to be discharged is expected to alternate between 44 and 45 fuel assemblies per outage. For normal core refueling in 2029 at the expiration of present operating license, the decay heat was calculated based upon 45 fuel assemblies irradiated for 18 months at a power level of 1811 MWt and off-loaded 100 hours after a reactor shutdown. This decay heat load was calculated by the ORIGEN2 computer program (*Reference 40*) based upon bounding assessments of fuel burn-up and a reactor power of 102% of rated full EPU power and corresponds to approximately 9.0 x 106 Btu/hr. ORIGEN2 has previously been used for the Ginna Re-racking Licensing Amendment Request in 1998. In addition, the background heat load in the SFP is based upon the assumption that 1200 previously discharged fuel assemblies are resident in the spent fuel pool with a combined decay heat of 3.9 x 106 Btu/hr. The combined decay heat for previously discharged assemblies is based upon the actual fuel assembly discharge history for all refueling outages prior to 1997 and the offloading sequence described above. Presently, the actual number of spent fuel rack storage positions installed in the SFP is 1321. Due to the present inventory of stored fuel assemblies, Ginna plans to implement on-site dry cask storage around 2009 to accommodate the off-loads out through 2029. Therefore, to maximize the pool residual heat load from the existing 1321 storage positions a bounding full core off-load in 2029 was assumed. The off-load analysis assumed completely filling all 1321 available storage locations. The previously discharged fuel was assumed to be the most recent spent fuel available to completely fill the pool. This assumes that fuel assemblies being stored in dry casks are the oldest fuel assemblies with the lowest decay heat rates.

Therefore, for a normal 45 fuel assembly core refueling outage, a bounding estimate of the total spent fuel pool heat load at the time of core off-load is 12.9 x 106 Btu/hr.

Since the total heat load for a normal 45 fuel assembly off-load 100 hours after the reactor shutdown is well below the available heat removal capability of SFP heat exchanger B, the combined heat removal capability of SFP heat exchanger A and SFP standby heat exchanger, and the available heat removal capability of either SFP pump A or the standby SFP pump cross connected to SFP heat exchanger B, the maximum expected spent fuel pool temperature would be below the 150°F limit.

Although a 1/3 core discharge to the spent fuel pool after a shutdown time of 100 hours would not approach the 150°F pool operational limit, the bounding off-load at 100 hours could cause the SFP temperature to exceed the 120°F value identified in Section 9.1.3.4.1 as the nominal upper bound for a normal refueling outage. The actual pool temperature for a 1/3 core off-load scenario would be dependent upon actual service water temperature as well as actual shutdown time to off-load and total decay heat inventory of the SFP. For the bounding 1/3 core off-load initiated at 100 hours time, the time period that the pool temperature could exceed 120°F would be small due to the continued reduction with time of the off-loaded fuel decay heat.

9.1.3.4.1.8 Full Core Off-Load Cooling Capability

For a full core off-load scenario spent fuel pool (SFP) cooling is provided by five (5) SFP cooling system options, as listed in the Technical Requirements Manual (TRM). These SFP cooling system options are:

1. SFP Loop A (normal)
2. SFP Loop B
3. SFP Standby Loop (normal)
4. SFP Loop A (cross-connect)
5. SFP Standby Loop (cross-connect)

The Technical Requirements Manual (TRM) specifies the minimum required time after shutdown for each of the five options listed above. The available SFP cooling system is capable of maintaining the bulk SFP temperature below 150°F as required by the Technical Requirements Manual (TRM). Use of the 150°F pool temperature limit provides 30°F of margin to the spent fuel pool structural integrity design limit of 180°F.

Consideration of a single passive failure for SFP cooling is not required by the NRC Standard Review Plan (SRP) (*Reference 46*) and is not a part of the licensing basis for the Ginna Station SFP cooling system. Per Section 9.1.3 of the SRP, for the "maximum normal heat load" (of the spent fuel pool) there should be suitable redundancy of components so that safety functions can be performed assuming a single active failure of a component coincident with the loss of offsite power. For the "abnormal maximum heat load" (defined in the SRP as full core unload), a single active failure need not be considered. The NRC Systematic Evaluation Program (SEP) evaluated Ginna Station's conformance to the SRP. Ginna Station's conformance to SRP Section 9.1.3 is addressed in *Reference 47* and *Reference 48*.

The minimum amount of time required after plant shutdown before the full core can be off-loaded is a function of the available SFP heat removal capability. Since cooling is provided by service water from Lake Ontario, the SFP heat removal capability is a function of lake temperature. The allowed combinations of lake temperature (as measured by **screen house** bay water temperature), time after shutdown, and SFP cooling system options, are cycle/outage specific and these combinations need to be re-evaluated for each full core off-load. The current requirements are listed in the Technical Requirements Manual (TRM).

The Technical Requirements Manual (TRM) indicates that the required time after shutdown prior to initiating a full core off-load is strongly dependent upon the available lake temperature. Use of an 85° F lake temperature for assessing full core off-loads during a typical Ginna fall or spring outage associated with an eighteen month fuel cycle may require delaying core off-load for an extended period. Consequently, for performing full core off-loads, each off-load scenario is conservatively evaluated on a case by case basis to identify the minimum required time after shutdown.

The minimum time after shutdown before initiating a full core off-load is determined by a conservative assessment of an upper bound lake temperature for the actual time of year and a review of historic lake temperature data. The total pool background decay heat is also conser-

vatively assessed for the actual loading of spent fuel in the pool and operating characteristics of the off-loaded fuel. The performance of the available spent fuel pool cooling system is conservatively assessed based upon the latest heat exchanger thermal performance test results along with the actual available heat exchanger surface area (e.g. current plugging level of the SFP heat exchangers). These parameters are used to determine both the available heat removal cooling capability at a 150°F pool temperature as well as the total spent fuel pool heat load as a function of shutdown time. Full core off-loads are not initiated until the spent fuel pool decay heat with the off-loaded core is less than the heat removal capability of the available cooling systems.

Additionally, as required by *Reference 38* for any full core off-load, the cycle specific limits for lake temperature and time after shutdown will be specified by the Technical Requirements Manual (TRM). The Technical Requirements Manual (TRM) also requires the availability of a 100% back-up SFP cooling heat removal system.

9.1.3.4.2 Leakage Provisions

Whenever a leaking fuel assembly is transferred from the fuel transfer canal to the spent fuel storage pool, a small quantity of fission products may enter the spent fuel cooling water. A small purification loop is provided for removing these fission products and other contaminants from the water. Radiation monitors detect leakage of spent fuel pool (SFP) water from the spent fuel pool (SFP) heat exchangers A or B into the service water (SW) system (see Section 11.5.2.2.13).

The probability of inadvertently draining the water from the spent fuel pool (SFP) cooling system is exceedingly low. The only means is through an action such as opening a valve on the cooling line and leaving it open when the pump is operating. In the unlikely event of water being drained from a portion of the SFP cooling system, the spent fuel storage pool itself cannot be drained, and no spent fuel is uncovered since the spent fuel pool (SFP) cooling connections enter near the top of the pool. Although the spent fuel pool (SFP) cooling pump discharge piping discharges near the bottom of the storage racks, a 1/4-in.-diameter drilled hole in the discharge piping, located approximately 18 in. below the normal spent fuel pool (SFP) water level, provides an antisiphoning effect, thereby precluding the lowering of the water level and uncovering the spent fuel assemblies. The temperature and level indicators in the spent fuel pool (SFP) would warn the operator of the loss of cooling. The slow heatup rate of the spent fuel pool (SFP) would allow sufficient time to take any necessary action to provide adequate cooling while the cooling capability of the spent fuel pool (SFP) cooling system is being restored.

9.1.3.4.3 Interruption of Spent Fuel Pool (SFP) Cooling

For plant uprate to 1775 MWt, the impact of a complete loss of spent fuel pool (SFP) cooling capability was evaluated. The loss of SFP cooling was assumed to occur100 hours after reactor shutdown immediately following a full core off-load with an initial SFP temperature of 150°F and SFP Loop B in operation. Since the shutdown time required for a full core off-load is a function of lake temperature as discussed in Section 9.1.3.4.1.8, SFP heat-up was analyzed for lake temperatures of 40°F, 60°F and 80°F.

The SFP heat-up analysis conservatively neglected any cooling associated with heat transfer to the SFP concrete walls, convective cooling to the ambient air and any evaporative cooling from the pool surface. The analysis took credit for the thermal inertia of the SFP water as well as the thermal inertia associated with the SFP racks, stored fuel assemblies and the SFP steel liner. The SFP heat load was assumed to be constant over the duration of the SFP heat-up. The SFP heat load assumed for the heat-up analysis is listed in Table 9.1-6 for the three lake temperatures analyzed. For the 40°F, 60°F, and 80°F lake temperature, the heat load assumed is equal to the heat removal capability of the SFP cooling system at a 150°F pool temperature.

Since the SFP structural design basis temperature is 180°F, the heat-up time from 150°F to the 180°F limit was analyzed for heat uprates based on both operation of SFP heat exchanger B and the combined operation of SFP heat exchanger A and the skid mounted SFP heat exchanger. Heat uprates were calculated for lake temperatures of 40°F, 60°F and 80°F. The results of these analyses assuming a complete loss of cooling are presented in Table 9.1-6. Heat up times to 212°F have also been calculated, though the 180°F heat-up times are controlling for Ginna since they correspond to the SFP design temperature of 180°F. These heat-up rates to 212°F and corresponding boil-off rates are also listed in Table 9.1-6. The heat up rates to 212°F are conservative because they do not include any operator action to restore cooling from an alternate source.

A makeup water flow rate of 60 gpm can be made available from the refueling water storage tank in less than 15 minutes. This make-up rate exceeds all of the boil-off rates listed in Table 9.1-6. As a back-up, 50 gpm of water from the chemical and volume control system hold up tanks can also be made available in approximately 15 minutes, which bounds all but one case presented in Table 9.1-6. For this one case where the initial boil-off rate exceeds 50 gpm, the mass imbalance would result in a maximum inventory loss from the SFP of less than 2 inches (*Reference 75*). Ginna Technical Specifications (T.S.) 3.9.11 requires that the water level above the top of the fuel assemblies in the SFP exceed 23 feet. Additionally, T.S. 3.9.11 requires stopping any fuel movement activities if the SFP level falls below 23 ft. Since the potential decrease in SFP inventory following a loss of cooling event is small, the resulting loss in inventory for the bounding case was determined to be acceptable (*Reference 68*).

The use of redundant components in the SFP cooling system provides adequate protection against primary component failures. Valves are also provided for isolating individual branch connections, pumps and heat exchangers should they fail. The existence of the installed SFP cooling systems and the availability of the SFP Standby Loop and other options as listed in the Technical Requirements Manual (TRM) provide assurance that SFP cooling can be restored should SFP cooling be rendered inoperable during a safety basis heat load scenario.

Following a complete loss of SFP cooling, operator actions would be taken to restore SFP cooling system capability, using one or more of the options as listed in the Technical Requirements Manual (TRM). The SFP cooling system can be aligned to establish cooling prior to the SFP heat-up to 180°F.

The SFP heat exchanger A can be made operational within forty-five (45) minutes following a complete loss of cooling of SFP heat exchanger B, as discussed in *Reference 41*. Initiation

of cooling by SFP heat exchanger A would cause the pool heat-up rate to be cut in half due to the 50% cooling available from SFP heat exchanger A. For the 40°F case listed in Table 9.1-6, the time for the pool temperature to reach 180°F at initiation of cooling by SFP heat exchanger A would be approximately 5.2 hours. The heat removal available by operation of SFP heat exchanger A would provide time for establishing additional SFP cooling capability. The SFP standby heat exchanger can be put in operation in three hours, which is less than the 5.2 hours available before the pool temperature would reach 180°F. An analysis was performed to demonstrate the time to boil if there is a complete loss of cooling to the SFP. A makeup water flow rate of 60 gpm can be made available from the refueling water storage tank in less than 15 minutes. As an alternative, 50 gpm of water from the chemical and volume control system hold up tanks can also be made available in approximately 15 minutes such that cooling the SFP by adding makeup water during an unlikely event of a complete loss of SFP cooling conforms with the guidance described in the NRC Standard Review Plan (SRP), (*Reference 46*); therefore, it is acceptable. The results of this analysis are documented in *Reference 38*, where the NRC concludes that cooling the SFP by adding makeup water during an unlikely event of a complete loss of SFP cooling conforms with the guidance described in the NRC Standard Review Plan (SRP) (*Reference 46*); therefore, it is acceptable. The SFP cooling capability provided is capable of maintaining SFP temperature below the 180°F structural design limit for the SFP.

9.1.3.5 Minimum Operating Conditions

The spent fuel storage pool is normally limited to 120°F except in unusual circumstances as previously described. Boric acid concentration in the pool fluid must be maintained at a minimum of 2300 ppm.

9.1.4 FUEL HANDLING SYSTEMS

The fuel handling systems provide a safe and effective means for transporting and handling reactor fuel from the time the fuel reaches the plant in an unirradiated condition until it leaves the plant after post-irradiation cooling. The fuel handling systems can be divided into the two categories of fuel storage and fuel handling. Fuel storage is discussed in Sections 9.1.1 through 9.1.3. The fuel handling category covers the facilities other than storage, equipment, and tools used to refuel the reactor and are discussed below.

As a result of using Westinghouse 422Vantage+ fuel assemblies, the following changes were made to existing fuel handling tools:

- Replace refueling machine gripper with any equivalent gripper design that is compatible with both the existing Ginna fuel assembly types and the new 422V+ design.
- Obtain new spent fuel and new fuel handling tools that are compatible with both the existing Ginna fuel assembly types and the new 422V+ design.
- Adjust RCCS stop on fuel handling car to prevent interference when transferring new 422V+ fuel from containment and the SFP.
- Modify portable RCCS tool to be compatible with both the existing Ginna fuel assembly types and the new 422V+ design.

9.1.4.1 Reactor Cavity

The reactor cavity is a reinforced-concrete structure that forms a pool above the reactor when it is filled with borated water for MODE 6 (Refueling). The cavity is filled to a depth that limits the radiation at the surface of the water to 50 mR/hr during those brief periods when a fuel assembly is transferred over the reactor vessel flange. The reactor vessel flange is sealed to the bottom of the reactor cavity by **a cam-lock** seal ring, which prevents leakage of refueling water from the cavity. This seal is installed after reactor cooldown but prior to flooding the cavity for MODE 6 (Refueling) operations. **The previously used inflatable seal is available in the event it is needed.** The cavity is large enough to provide storage space for the reactor upper and lower internals, the rod cluster control drive shafts, and miscellaneous refueling tools.

The likelihood of reactor cavity seal failure and its consequences were analyzed in response to IE Bulletin 84-03 (*References 16* and *17*). It was concluded that seal failure, such as occurred at Haddam Neck, is improbable due to differences in both plant and seal design. **Since the cam-lock seal was developed after IE Bulletin 84-03, the design is different than that used at Haddam Neck.** However, should a postulated gross seal failure occur, operator action is necessary to prevent fuel uncovery only in the event that a fuel assembly is in the manipulator crane mast at the time of the event. Procedures direct the crane operator to take appropriate action to protect the fuel assembly from overheating. For all other cases, the fuel remains covered, although some water shielding will be lost. High-radiation fields, which could result, will have negligible effect on the general public.

To maintain clarity of the water in the reactor cavity during MODE 6 (Refueling), a reactor cavity filtration system has been installed, which consists of a 600-gpm centrifugal pump and four filters.

9.1.4.2 Refueling Canal

The refueling canal is a passageway extending from the reactor cavity to the inside surface of the reactor containment. The canal is formed by two concrete shielding walls which extend upward to the same elevation as the reactor cavity. The floor of the canal is at a lower elevation than the reactor cavity to provide the greater depth required for the fuel transfer system upender and the rod cluster control changing fixture located in the canal. The transfer tube enters the reactor containment and protrudes through the end of the canal. Canal wall and floor linings are similar to those for the reactor cavity.

9.1.4.3 Fuel Handling Equipment

9.1.4.3.1 Auxiliary Building Crane

The auxiliary building crane is used in moving the new fuel assemblies into and out of their storage area and in the movement of the spent fuel shipping cask. The crane is electrically interlocked to prevent movement over the spent fuel storage racks. These interlocks may be defeated by keys, and when defeated, indicate the condition by rotating flashing yellow or red lights. When in this condition, the crane operator is responsible to observe the following restrictions: (1) A load in excess of one fuel assembly and its handling tool may not be carried over storage racks containing spent fuel, and (2) the restriction in (1) shall not apply to

the movement of canisters containing consolidated fuel rods if the spent fuel racks beneath the transported canister contain only spent fuel that has decayed at least 60 days since reactor shutdown. The weight of one standard fuel assembly and its handling tool is 2000 lb. The weight of a fully loaded canister is approximately 2300 lb.

The auxiliary building crane main hoist meets the single-failure criteria of NUREG 0554 and NUREG 0612. The main hoist is rated at 32.5 tons; however, the maximum critical load is 30 tons, which is characterized as a fully loaded single-element spent fuel cask with a redundant yoke. No single failure of any lifting component of the main hoist will result in the drop of any load up to 32.5 tons. The main hoist is used for handling heavy loads such as the spent fuel cask. The main hoist is capable of stopping and holding the load under all conditions, including the safe shutdown earthquake. The 5-ton auxiliary hoist, which does not meet the single-failure criteria of NUREG 0554 and NUREG 0612, is used to handle new fuel assemblies and canisters. Administrative procedural controls and the Technical Requirements Manual restrict the use of the auxiliary building crane when handling heavy loads.

9.1.4.3.2 New Fuel Elevator

The new fuel elevator is a box-shaped carriage (sized to contain a single fuel assembly), which rides on a track mounted to the spent fuel pool (SFP) wall. It is used to lower new fuel assemblies into the spent fuel pool (SFP). It is also utilized under special administrative controls to perform fuel reconstitution activities on spent fuel assemblies. The elevator is not interlocked, but the button must be continuously depressed for up or down movement. An electric winch is used as the motive power for the elevator and is controlled from the spent fuel pool bridge control panel located on the operating floor level.

9.1.4.3.3 Spent Fuel Pool (SFP) Bridge

The spent fuel pool (SFP) bridge is a wheel-mounted walkway which spans the spent fuel pool (SFP) in the north-south direction. It carries two electric motor driven monorail hoists on overhead structures which may be manually positioned along the walkway. Fuel assemblies are moved within the pool by means of a long-handled tool (spent fuel handling tool) suspended from the hoist in service. The hoist travel and tool length limit the maximum lift of a fuel assembly, thus maintaining a safe shielding depth of water above the fuel. A hoist load cell used between the hoist and motorized trolley allows for a constant check on fuel assembly load conditions. The monorail hoists and trolleys are rated at 1 ton. Rod Cluster Control Assemblies (RCCAs) are moved within the pool by means of another long handled tool (Portable RCCA Tool).

9.1.4.3.4 Fuel Transfer System

The fuel transfer system is an underwater, variable speed cable/winch driven conveyor car that runs on tracks extending from the spent fuel pool (SFP) through the transfer tube and into the containment refueling canal. The conveyor car basket receives a fuel assembly in the vertical position, is lowered to the horizontal for passage through the fuel transfer tube, and is raised to the vertical for removal of the fuel assembly. Conveyor car motion and the upending and lowering functions are controlled from panels on the operating floor.

Two electric winches are mounted above the water in the Auxiliary Building at the South end of the transfer slot. The winches are electrically interlocked such that when one winch is energized, the counter-torque of the other hoist is energized, maintaining cable tension at all times. Reeved and attached to the conveyor car, the hoist moves the transfer conveyor back and forth between the Spent Fuel Pool (SFP) upender and the containment refueling canal upender. The conveyor is capable of speeds up to 80 fpm.

The conveyor car winches are provided with load sensitive bases, which are used to de-energize the winches if the cable tension builds up to a preset limit, thereby providing overload protection during operation. The load sensitive bases also function to protect from a preset underload limit or slack cable condition.

The conveyor car winch, which pulls the conveyor car into the Auxiliary Building, is equipped with a resolver, which provides both the Auxiliary Building and Containment Refueling Canal stops and slow zones. As a redundancy feature, the Programmable Logic Controller (PLC) monitors a resolver mounted **on** the **r**eactor **c**onveyor **w**inch and compares the positions reported by the two resolvers to ensure that they are within a reasonable delta.

The fuel assembly basket is pin-hinged to the conveyor car to permit tipping it to a vertical position for fuel assembly loading and unloading. The basket engages with an upending frame at either end of its travel, and when the frame is raised with an electric winch on the operating floor, the basket and fuel assembly are raised with it. The lifting frames are interlocked such that the conveyor car must be at the end of its travel before the frame will operate. An interlock is also provided to prevent car motion unless the fuel assembly basket is in the DOWN position. Note that the gate valve interlock is not currently functional and is permanently jumpered out. Conveyor car motion is administratively controlled by refueling procedures. The conveyor car is also provided with an emergency cable which allows the car to be retrieved from the transfer tube should a **cable break** or the motor fail.

The fuel transfer tube through which the conveyor car runs may be closed on the spent fuel pool (SFP) side with a gate valve, manually operated by means of a reach rod from the operating floor. A blind flange is provided for the containment side. During normal plant operations the conveyor car is stored in the spent fuel pool (SFP), the gate valve seals off the reactor containment, and the blind flange seals the containment side of the tube.

9.1.4.3.5 Manipulator Crane

The manipulator crane shown in Figure 9.1-9 transfers fuel assemblies within the core and between the core and the fuel transfer system conveyor car. It is a rectilinear bridge and trolley crane with a vertical mast, which extends down into the refueling water. The bridge spans the reactor cavity and runs north-south on rails set along the cavity edge. The trolley traverses east-west along the bridge. This allows exact positioning of the mast above any fuel assembly.

A long gripper tube with a pneumatic gripper assembly on the end is lowered down from the mast to grip the fuel assembly. A winch mounted on the trolley raises the gripper tube and fuel assembly up into the mast tube. While inside the mast tube, the fuel is transported to its

new position. The outer mast is mounted on a support bearing that allows rotation of the mast about its centerline to allow proper alignment of the fuel.

All controls for the manipulator crane are located on a console on the trolley. The bridge is positioned over the core by the operator while observing a monitor on the console, which reflects the view given by a television camera mounted to the crane bridge. The camera views a coordinate system laid out on the adjoining wall. The camera and monitor are used only during MODE 6 (Refueling) operations. The camera lens is removed and the power and signal cables are disconnected and stored when not in use. To position the bridge over the rod cluster control assembly change fixture, it is positioned against the rail end stops. The drives for the bridge, trolley, and winch are all variable speed. In an emergency, the drives may be operated manually using a handwheel on the motor shaft.

The suspended weight on the gripper tool is monitored by electric load cells with an indicator mounted on the console. A load in excess of 110% of a fuel assembly stops the winch drive in the up direction. The load cells also sense a slack cable condition and connect to the gripper interlock which prevents the opening of a solenoid valve in the air line to the gripper except when zero suspended weight is indicated. This interlock is backed up by a mechanical weight actuated lock in the gripper which prevents gripper operation even if air pressure is applied, thereby preventing opening when a fuel assembly is being supported.

There are several other safety features or interlocks incorporated in the manipulator crane:

1. Travel limit switches on the bridge and trolley drives prevent movement north of the core (away from the transfer canal).
2. Bridge, trolley, and winch drives are mutually interlocked to prevent simultaneous operation of any two drives.
3. A position safety switch, the Gripper Tube Up position switch, prevents bridge and trolley main motor drive operation except when the safety switch is actuated.
4. An interlock on the hoist drive circuit in the up direction permits the hoist to be operated only when either the Open or Closed indicating switch on the gripper is actuated.
5. An interlock of the bridge and trolley drives prevents the bridge drive from traveling beyond the edge of the core towards the transfer canal unless the trolley is aligned with the refueling canal centerline. The trolley drive is locked out when the bridge is beyond the south edge of the core.
6. The manipulator crane is designed so as not to drop a fuel assembly or to fall into the cavity during a safe shutdown earthquake.

The manipulator crane was modified in 1997 to accept a skid mounted sipping system for in-mast fuel assembly leakage examinations. The permanent aspects of this modification include suction connections at the fuel gripper and associated hoses routed through the mast to a dedicated location on the mast support structure.

9.1.4.3.6 Reactor Vessel Head Lifting Device

The reactor head lifting device shown in Figure 9.1-10 consists of a welded and bolted structural steel frame with suitable rigging for removal and storage of the reactor head for servicing and replacing the reactor internal components.

The device, an annular ring girder, is permanently attached to three lifting lugs which are an integral part of the reactor head through three lug assemblies. The legs are pinned and held fastened by a jam nut. They extend vertically upward and pass through the girder and a circular platform assembly to which they are based and welded. The upper portion of the lift rig was modified by PCR 2001-0042 during the Fall 2003 refueling outage, to serve as a portion of the control rod drive cooling system ductwork.

The platform elevation is such that it encloses the top of the control rod drive housing shroud and thus provides access to and allows maintenance on the rod drives and position indication equipment. A removable handrail is placed around the outer periphery of the platform. Located around the outside bottom portion of the ring girder is an I-beam. The beam acts as a support and monorail for the stud tensioners used during the **refueling** procedure. An adjustable tripod lifting sling is pinned to the hook of the crane and lowered over the platform assembly of the lifting rig. Each leg of the sling is positioned for alignment by its turnbuckle and attached to the top of the three legs of the lifting rig in the same manner as to the head.

The lifting sling must be removed and stored on the operating deck when not in use. Permanent installation would impede placement of the missile shield located above the control rod drive housing.

9.1.4.3.7 Reactor Internals Lifting Device

The internals lifting rig is a structural frame device used to handle the upper and lower reactor vessel internal packages. The rig consists of a sling assembly, spreader assembly, leg assembly, and support ring.

The rig is suspended from the main crane hook. The alignment of the rig, with respect to the internals lift points, is obtained through bushings attached to the support ring which fit over the reactor vessel guide studs. When the rig is not in use, it is normally stored on the upper internals storage stand.

The rig is placed on the reactor vessel after the vessel head is removed and is bolted to the internals. The rig normally remains on the internals until replacement in the reactor vessel after the refueling operations are complete and the vessel head is to be reinstalled.

A tension or load cell is provided with the rig as part of the sling assembly. Its purpose is to monitor the load during all handling operations. Any deviations from the established normal load readings will indicate interference or binding and allow corrective action to prevent damage.

9.1.4.3.8 Rod Cluster Control Assembly Changing Fixture

The rod cluster control assembly fixture is used to remove, install, and temporarily store rod cluster control assemblies. It is located in the refueling canal near the containment terminus of the fuel transfer system. It is made up of a guide tube section, a carriage section, a frame and track section, and a gripper and drive mechanism.

The wheel-mounted carriage section rides on a track anchored to the refueling canal floor. It is made up of three compartments. The center and one end compartment will accept fuel assemblies while the other section will accept only a rod cluster control assembly.

The guide tube is mounted on the refueling pool wall above the carriage and acts to maintain alignment of the rod cluster control assembly rodlets when the pneumatic gripper raises and lowers them as required. All positioning of the carriage and operation of the gripper is accomplished from the operating floor. The fuel assemblies are moved into and out of the fixtures with the manipulator crane.

9.1.4.3.9 Upper Internals Storage Stand

The upper internals storage stand is a structural stainless steel fixture installed in the refueling cavity and is used to support the upper internals package when removed from the reactor vessel. The construction of the upper internals does not permit them to be supported from the bottom. During MODE 6 (Refueling) the stand is underwater.

9.1.4.4 Fuel Handling/Refueling Tools

The fuel handling tools are used to prevent close operator exposure to the fuel. Several other specialized tools are also available to aid the operators in performing specific MODE 6 (Refueling) functions.

9.1.4.4.1 New Fuel Assembly Handling Tool

The new fuel assembly handling tool, shown in Figure 9.1-11, is used to lift and transfer fuel assemblies from the new fuel shipping containers to the new fuel storage racks. The tool is also used to transfer fuel assemblies from the new fuel storage racks to the new fuel elevator. The tool employs four cam-actuated latching fingers which grip the underside of the fuel assembly top nozzle. The operating handles to actuate the fingers are located on the side of the tool. With the fingers latched, the operating handles are in the DOWN position; with the fingers unlatched, the operating handles are in the UP position. When the fingers are latched, the safety locking device on the side of the tool is turned in to prevent the accidental unlatching of the fingers.

9.1.4.4.2 Spent Fuel Handling Tool

The spent fuel handling tool shown in Figure 9.1-11, also called the long-handled tool, is used to manually handle and inspect new and spent fuel in the spent fuel pool (SFP) and to move fuel to and from the fuel transfer system conveyor car. Its operation is similar to that of the new fuel handling tool. The spent fuel assembly handling tool employs four cam-actuated latching fingers which grip the underside of the fuel assembly top nozzle. The operating han-

dle to actuate the fingers is located at the top of the tool. With the operating handle in the DOWN position, the fingers are latched; with the handle in the UP position, the fingers are unlatched. Once the fingers are latched, insertion of a pin in the operating handle prevents the fingers from being accidentally unlatched during fuel handling operations.

9.1.4.4.3 Burnable Poison Rod Assembly Handling Tool

(Note: The information in this section is for historical purposes only. The burnable poison rod assembly (BPRA) handling tool is no longer used since plate mounted BPRAs are no longer utilized at Ginna.) The burnable poison rod assembly handling tool, shown in Figure 9.1-11, is used to transfer plate-mounted burnable poison rod assemblies between fuel assemblies or between a fuel assembly and a burnable poison rod assembly storage insert in the spent fuel racks. Transfer is accomplished by raising the burnable poison rod assembly out of one location, drawing it up inside the tool, then lowering it down out of the tool into the other location.

This tool is used in the spent fuel building, suspended from the hoist on the spent fuel bridge and operating on the bridge walkway. The tool enters into the guide holes of a fuel assembly top nozzle or rack insert. Two sleeve actuated fingers engage the holddown bar at the top of the burnable poison rod assembly. The fingers actuator assembly is spring loaded in the DOWN (holding) position and can be moved upward to release the fingers only when the burnable poison rod assembly is in the FULL DOWN position.

Four pneumatic-cylinder-driven comb assemblies at right angles form an interlocking grid to position and guide the poison rods during withdrawal or insertion. During the up or down movement of the burnable poison rod assembly inside the tool, an indicator is tripped to notify the operator when moving the combs in or out to avoid the thimble plugs.

The 6-in.-long thimble plugs are larger in diameter than the burnable poison rods and will interfere with extended combs; consequently, the combs must be fully retracted when the thimble plugs are at or below the level of the combs.

The comb cylinders are driven by an attached air supply and controlled by a valve package mounted at the top of the tool. A safety latch over the valve handles prevents the combs from being accidentally withdrawn.

Two types of burnable poison rod assembly handling tool guides are provided to assist in locating the handling tool on a fuel assembly or rack insert. One type aligns over the top funnel portion of a spent fuel rack; the other is designed to align over a spent fuel rack insert or the upender fuel assembly container. Each guide has two attached nylon ropes for lowering into position prior to landing the handling tool. The guide remains there during burnable poison rod assembly removal or insertion and is removed after the handling tool has been raised for transfer to the next specified location.

Tool guides are necessary because the large base plate near the bottom end of the handling tool completely overhangs the three locating pins which must enter close-fitting holes in the fuel assembly top nozzle or rack insert. Thus, the tool operator standing on the spent fuel bridge cannot observe the pins to guide them into their respective holes.

9.1.4.4.4 Control Rod Drive Shaft Tool

The control rod drive shaft tool, shown in Figure 9.1-11, is utilized by the operator to disconnect the rod drive split shaft from the collet coupling on the rod cluster control spider. This is done after the head is removed and before the upper internals lifting device is attached. Once disconnected, the drive shafts remain with the upper internals package as it is lifted and wet stored.

The control rod drive shafts are removed from and reconnected to the rod cluster control assembly by means of the control rod drive shaft unlatching tool. The tool employs two sets of cam-actuated latching fingers, which grip the control rod drive shaft and disconnect button, respectively. The cams are actuated by air cylinders controlled by valves equipped with a locking ring on the operating handle to prevent accidental energizing of the air cylinders. The air cylinders actuating the drive shaft latching fingers are spring loaded causing them to lock in the shaft latch position in case of loss of air, thus preventing accidental dropping of the control rod. The disconnect button finger assembly is connected directly to an indicator rod by the double ended air cylinder. The upper end of the indicator rod is calibrated to the FULL UP and FULL DOWN position of the drive shaft disconnect button.

9.1.4.4.5 Thimble Plug Handling Tool

The thimble plug handling tool, shown in Figure 9.1-11, is used to handle the Westinghouse Optimized Fuel Assemblies and the Westinghouse VANTAGE + Fuel Assemblies. It employs two sleeve-actuated latching fingers to grip the thimble plug handling bar. The fingers and the finger housing move with respect to the outside frame thereby permitting the thimble plug to be withdrawn up inside the frame. The operating handle to actuate the fingers is located at the top of the tool. With the handle in the DOWN position, the fingers are latched; with the handle in the UP position the fingers are unlatched.

9.1.4.4.6 Irradiation Sample Handling Tool

The irradiation sample handling tool, shown in Figure 9.1-11, is a long handled tool suspended from the containment building crane used to remove the irradiation specimens from their holders located on the outer surface of the neutron shield panels along the lower core barrel. This tool, operated from the manipulator crane bridge, extends through aligned access openings in the upper core barrel flange, thereby preventing unnecessary lifting of the core barrel out of the reactor vessel.

The irradiation sample handling tool employs three cam-actuated latching fingers which grip the top plug of the irradiation sample capsule. The operating handle to actuate the fingers is located at the top of the tool. With the fingers latched, the operating handle is in the DOWN position; with the fingers unlatched, the handle is in the UP position. As a safety feature, a pin is to be inserted into the operating shaft to preclude the possibility of the fingers becoming unlatched during removal of capsules. The tool is also equipped with a secondary operating sleeve which will permit an operator to remove the irradiation specimen access plug. The pin would be removed during this operation and the operating handle would be held in either the UP or DOWN position by means of the ball detents.

9.1.4.4.7 Stud Tensioners

The stud tensioners are hydraulically operated devices which unload the reactor vessel head studs to transition from MODE 5 (Cold Shutdown) to MODE 6 (Refueling) conditions and then preload them following refueling to transition back to MODE 5. The tension is normally applied simultaneously to as many studs as there are tensioners, and studs are tensioned to their operational load according to a sequence designed to prevent high stresses in the flange region, and unequal loading in the studs.

Trolleys operate on an I-beam (welded to the ring girder) around the reactor vessel head to position the hoists, which are used to move the stud tensioners from one stud to another. A hydraulic pumping unit, control console, and pressure release/relief valve provide the means to operate the tensioners. When the hydraulic pressure release valve is operated, the hydraulic fluid pressure is decreased, thus reducing the force applied to the stud by the tensioner. Because it contains aluminum and electronics, all removable tensioning equipment (trolleys, hoists, pumping unit, etc) is taken out of containment before reactor operation.

9.1.4.4.8 Portable Rod Cluster Control Assemble (RCCA) Tool

The portable RCCA Tool is used by the operator to move rod control cluster assemblies in the spent fuel pool. The tool is suspended from the SFP bridge hoist when in use. The tool consists of a telescoping grapple that engages the RCCA hub and retracts the RCCA into a cage that maintains alignment of the rodlets. The portable RCCA tool is compatible with OFA and 422V+ fuel assembly top nozzles.

9.1.4.5 Fuel Handling System Operation During MODE 6 (Refueling)

9.1.4.5.1 Introduction

The MODE 6 (Refueling) sequence follows detailed procedures which ensure a safe, efficient operation. These procedures, along with Technical Specifications requirements and the previously discussed equipment interlocks and safety features, provide assurance that no threat to the public health and safety will occur. The MODE 6 (Refueling) operation may be divided into three major phases: preparation, MODE 6 (Refueling), and reactor reassembly.

9.1.4.5.2 Preparation Phase

In the preparation phase, the reactor is shut down, cooled down to less than 140°F, and borated to a value that meets the requirements of the Section 3.9.1 of the Ginna Technical Requirements Manual (TRM) . The containment is surveyed and ventilated as necessary, refueling equipment is checked out, and reactor disassembly begun. The control rod drive mechanism missile shield is removed to storage, then ventilation ducting, control rod drive mechanism cables, reactor vessel head insulation, instrument leads, and core exit thermocouple nozzle assemblies (CETNAs) are removed. The reactor vessel studs are detensioned, the studs removed, and stud hole plugs and three guide studs installed. The flux mapping thimbles are retracted and low pressure seals made up. The final preparation of underwater lights and tools is made, the reactor vessel to cavity seal ring is installed, and the fuel transfer tube blind flange is removed.

At this point the reactor vessel head lifting rig is installed and the head is unseated, checked for levelness, and lifted 108 in. above the flange. The reactor cavity is now filled with water from the refueling water storage tank (RWST) as the head is raised until at least 23 ft of water exists above the flange. The reactor vessel head is then removed to storage.

The control rod drive shafts are disconnected and, with the upper internals, are removed by the vessel internals lifting rig and containment crane. The upper internals are wet stored on a stand in the refueling cavity. The fuel assemblies are now free from obstructions, and the core is ready for MODE 6 (Refueling).

9.1.4.5.3 MODE 6 (Refueling) Phase

With the initiation of the MODE 6 (Refueling) phase, the reactor cavity water level is verified to be covering the transfer canal and the reactor cavity boron concentration is verified to be within Technical Specifications limits. The fuel transfer tube valve is then opened. This provides a fuel movement path and allows level monitoring, cooling, and cleanup of the refueling water by the spent fuel pool (SFP) cooling system.

The MODE 6 (Refueling) sequence is begun by a manipulator crane. It is positioned over a spent fuel assembly, the gripper tube is lowered, and the gripper engaged with the upper nozzle. The fuel is lifted up into the protective mast of the machine. This height is sufficient to clear the top of the reactor vessel yet still leave sufficient water depth to provide radiation shielding for personnel. The manipulator crane then transfers the fuel to the fuel transfer system for movement to the spent fuel pool (SFP).

Once the spent fuel is removed from the core, partially spent fuel is transferred to the vacated positions and new fuel assemblies are brought in via the spent fuel pool (SFP) and fuel transfer system and loaded into the appropriate locations. The fuel management plan and the resulting plant procedures specify the specific fuel moves for each fuel assembly.

The MODE 6 (Refueling) sequence is modified for fuel assemblies containing rod cluster control elements. If transfer of the rod cluster control elements between fuel assemblies is required, the assemblies are taken to the rod cluster control change fixture to exchange the rod cluster control elements from one assembly to another. Such a change is required whenever a spent fuel assembly containing a rod cluster control element is removed from the core and whenever a fuel assembly is placed in or taken out of a control position during MODE 6 (Refueling) rearrangement.

The RG&E has incorporated the Westinghouse guidelines currently in effect entitled Subcriticality and Core Coupling Guidelines for Core Loading into the Ginna fuel assembly movement sequence. Following these guidelines ensures that the shutdown margin requirements of the Ginna Technical Specifications are maintained during MODE 6 (Refueling) operations.

In the interest of saving time in the MODE 6 (Refueling) operation, the operators may elect to temporarily wet store the new fuel assemblies in designated locations in the spent fuel pool (SFP) prior to actual MODE 6 (Refueling).

Whenever new fuel is added to the reactor core, a reciprocal curve of source neutron multiplication (inverse count rate ratio plot) is recorded to verify the subcriticality of the core.

9.1.4.5.4 Reactor Reassembly

Once all the fuel has been positioned in the core, the fuel transfer conveyor car is parked in the spent fuel pool (SFP) and the fuel transfer tube isolation valve is closed and the containment crane replaces the reactor vessel upper internals package in the vessel. The control rod drive shafts are then reattached to the rod cluster control assemblies. New O-ring seals are installed on the reactor head which is positioned over the reactor vessel and slowly lowered as the cavity water level is lowered. When the reactor vessel head is about 1 ft above the flange, the reactor cavity is completely drained and the flange is cleaned. The reactor vessel head is then seated on the flange surface.

The reactor vessel cavity seal ring is removed and stored. The guide studs and plugs are removed and the stud holes cleaned. The refueling cavity is then washed and decontaminated. The blind flange on the fuel transfer tube is reinstalled. The hold-down studs are replaced and torqued with the hydraulic tensioners and all instrument port thermocouple seals, thermocouples, and electrical connections are restored. Cooling ducts and reactor vessel head insulation are replaced and the missile shield moved into place above the reactor. Finally, the in-core detector thimbles are inserted into the core, seals are made up, and all necessary connections are made.

Any maintenance required on the refueling equipment is accomplished at this time and it is then returned to its power operation storage position. When cleanup and restorage is complete, all preoperational tests and checks are made.

9.1.4.6 Fuel Handling System Evaluation

Underwater transfer of spent fuel provides essential ease and corresponding safety in handling operations. Water is an effective, economic, and transparent radiation shield and a reliable cooling medium for removal of decay heat.

Basic provisions to ensure the safety of MODE 6 (Refueling) operations are as follows:

A. Gamma radiation levels in the containment and fuel storage areas are continuously monitored. These monitors provide an audible alarm at the initiating detector indicating an unsafe condition. Continuous monitoring of reactor neutron flux provides immediate indication and alarm of an abnormal core flux level in the control room.

B. Containment penetrations shall be in the status specified in the Technical Specification LCO 3.9.3 during core alterations and during movement of irradiated fuel assemblies within containment.

C. Whenever new fuel is added to the reactor core, a reciprocal curve of source neutron multiplication is recorded to verify the subcriticality of the core.

D. Direct communication between the control room and the refueling cavity manipulator crane is available whenever changes in core geometry are taking place to allow the control room operator to inform the manipulator operator of any impending unsafe condition detected from the main control board indicators during fuel movement.

9.1.4.6.1 Incident Protection

Direct communication between the control room and the refueling cavity manipulator crane is available whenever changes in core geometry are taking place.

This provision allows the control room operator to inform the manipulator operator of any impending unsafe condition detected from the main control board indicators during fuel movement.

9.1.4.6.2 Malfunction Analysis

An analysis is presented in Section 15.7.3, concerning cladding damage to all fuel rods in one assembly, for evaluating environmental consequences of a fuel handling accident.

9.1.4.7 Minimum Operating Conditions

Limiting conditions for MODE 6 (Refueling) operations are specified in the Technical Specifications.

Whenever the core cooling or containment spray systems are specified to be operable, the refueling water storage tank (RWST) must have a minimum water volume of 300,000 gallons and have a boron concentration not less than 2750 ppm and no more than 3050 ppm. The refueling water storage tank (RWST) capacity is 338,000 gallons and the quantity of water required for MODE 6 (Refueling) is 230,000 gallons.

Analysis of loss-of-coolant incidents shows that the quantity of water in storage is sufficient for limiting core temperatures and containment pressure following any incident. These analyses are discussed in Section 15.6.

9.1.4.8 Tests and Inspections

Upon completion of core loading and installation of the reactor vessel head, certain mechanical and electrical tests were performed prior to initial criticality. The electrical wiring for the rod drive circuits, the rod position indicators, the reactor trip circuits, the in-core thermocouples, and the reactor vessel head water temperature thermocouple were tested at the time of installation. The tests were repeated on these electrical items before initial plant operation.

9.1.5 CONTROL OF HEAVY LOADS

As a result of the NRC review of load-handling operations at nuclear power plants, NUREG 0612, Control of Heavy Loads at Nuclear Power Plants, was issued. Following the issuance of NUREG 0612, a generic letter, dated December 22, 1980, was sent to all plants requesting that responses be prepared to indicate the degree of compliance with the guidelines of NUREG 0612. The responses were made in two stages. The first response (Phase I) was to identify the load-handling equipment within the scope of NUREG 0612 and to describe the associated load paths, procedures, operator training, special and general purpose lifting devices, the maintenance, testing and repair of equipment, and the handling equipment specifications. The second response (Phase II) was intended to show that either single-failure-proof handling equipment was not needed or that single-failure-proof equipment had been provided.

Ginna Station responded with submittals to the NRC on February 1, 1982, (*Reference 18*) March 2, 1983, (*Reference 19*) and October 12, 1983 (*Reference 20*). The NRC staff and its consultant, the Franklin Research Center, have reviewed the submittals for Ginna Station and have issued a technical evaluation report, (*Reference 21*) and a safety evaluation report (*Reference 22*) concluding that Phase I of the control of heavy loads issue for Ginna Station is acceptable.

Since the issuance of these reports, an updated inspection program for the reactor head lifting rig was proposed in a letter to the NRC dated May 30, 1986 (*Reference 23*). This program of 100% visual inspection of the lifting rig welds, prior to first use at each MODE 6 (Refueling) outage, together with 10-year surface examinations on exposed portions of the welds is considered adequate testing to verify that the lifting device is in compliance with NUREG 0612. The auxiliary building crane has been upgraded to the single-failure requirements of NUREG 0554. See Section 9.1.4.3.1.

The Ginna Station responses to Phase II of the issue were submitted on March 26, 1984, (*Reference 24*) and July 31, 1984. (*Reference 25*). Based on improvements in heavy loads handling obtained from the implementation of Phase I, further action is not required to reduce the risk associated with the handling of heavy loads. Therefore, Phase II is considered complete.

In 1996, the NRC issued Bulletin 96-02 (*Reference 32*) to alert licensees to the importance of complying with existing regulatory guidelines associated with the control and handling of heavy loads at nuclear power plants while the plant is operating. In *Reference 33*, RG&E responded to Bulletin 96-02 by stating that a review was performed of planned activities into 1998 related to heavy loads and that all potential heavy load movements were determined to be within the scope of the Ginna Station licensing basis. In *Reference 44*, the NRC determined that RG&E's response to Bulletin 96-02 was acceptable and therefore considers the issue to be closed.

The "Industry Initiative on Control of Heavy Loads," NEI-05 (Revision 0) was reviewed to verify the Ginna's heavy load lifts continue to be conducted safely and that the plant procedures accurately reflect the licensing bases.

9.1.5.1 CONDUCT OF HEAVY LOADS MOVEMENTS

The movement of heavy loads at Ginna Station is controlled under plant procedures. These procedures give requirements for material handling equipment and their inspections. Any lifted load greater than 1500 pounds is treated as a heavy load at Ginna Station.

A specific procedure exists for each crane that can move loads over safety related equipment at Ginna Station. Each procedure gives safe load paths for load movements with its associated crane.

Since the movement of the reactor vessel head from the reactor to its temporary storage stand during a refueling outage is considered to be a high risk evolution, that movement is further controlled through the use of refueling procedures. Those procedures apply the general mechanical maintenance administrative controls for heavy loads, but also

restrict the height that the reactor vessel head may be lifted above the core before it is moved away from above the core. This restriction is imposed to assure compliance with the load drop analysis of the reactor vessel head that was performed as part of Ginna's response to NUREG 0612.

REFERENCES FOR SECTION 9.1

1. Application for Amendment to Operating License, January 30, 1976.

2. Letter from A. Schwencer, NRC, to L. D. White, Jr., RG&E, Subject: Issuance of Amendment No. 11 to Provisional Operating License No. DPR-18, dated November 15, 1976.

3. Letter from R. W. Kober, RG&E, to H. R. Denton, NRC, Subject: Increase of the Spent Fuel Storage Capacity, dated April 2, 1984.

4. Letter from J. A. Zwolinski, NRC, to R. W. Kober, RG&E, Subject: Increase of the Spent Fuel Storage Capacity, dated November 14, 1984.

5. Letter from G. E. Lear, NRC, to R. W. Kober, RG&E, Subject: Storage of Consolidated Fuel, dated December 16, 1985.

6. Letter from J. E. Maier, RG&E, to H. R. Denton, NRC, Subject: Application for Amendment to Operating License, dated February 23, 1983.

7. W. E. Ford III, CSRL-V: Processed ENDF/B-V 227-Neutron-Group and Pointwise Cross-Section Libraries for Criticality Safety, Reactor and Shielding Studies, ORNL/CSD/TM-160, June 1982.

8. N. M. Greene, AMPX: A Modular Code System for Generating Coupled Multigroup Neutron-Gamma Libraries from ENDF/B, ORNL/TM-3706, March 1976.

9. L. M. Petrie and N. F. Landers, KENO Va--An Improved Monte Carlo Criticality Program With Supergrouping, NUREG/CR-0200, December 1984.

10. LER 1998-001, Boraflex Degradation in Spent Fuel Pool Storage Racks Results in Plant Being in an Unanalyzed Condition, dated March 11, 1998.

11. T. Q. Nguyen, et al., Qualification of the PHOENIX-P/ANC Nuclear Design System for Pressurized Water Reactor Cores, WCAP 11596-P-A (Proprietary), June 1988.

12. S. Q. King, Control Room Doses, FHA and TMA, FTI Doc. No. 32-1258141-00, dated January 29, 1997.

13. Deleted.

14. M. A. Rutherford, Control Room Doses, FHA and TMA, FTI Doc. No. 32-1258141-01, dated April 15, 1998.

15. Generic Letter 96-04, Boraflex Degradation in Spent Fuel Pool Storage Racks, dated June 26, 1996.

16. Letter from R. W. Kober, RG&E, to T. E. Murley, NRC, Subject: Refueling Cavity Water Seal, dated November 28, 1984.

17. Letter from R. W. Kober, RG&E, to T. E. Murley, NRC, Subject: Refueling Cavity Water Seal, dated March 29, 1985.

18. Letter from J. E. Maier, RG&E, to D. G. Eisenhut, NRC, Subject: Control of Heavy Loads, dated February 1, 1982.

19. Letter from J. E. Maier, RG&E, to D. M. Crutchfield, NRC, Subject: Control of Heavy Loads, Supplemental Report, dated March 2, 1983.

20. Letter from J. E. Maier, RG&E, to D. M. Crutchfield, NRC, Subject: Control of Heavy Loads, dated October 12, 1983.

21. Letter from D. M. Crutchfield, NRC, to J. E. Maier, RG&E, Subject: Transmittal of Technical Evaluation Report on Control of Heavy Loads, dated August 19, 1982.

22. Letter from D. M. Crutchfield, NRC, to J. E. Maier, RG&E, Subject: Transmittal of Safety Evaluation on Control of Heavy Loads (Phase I), dated January 18, 1984.

23. Letter from R. W. Kober, RG&E, to G. E. Lear, NRC, Subject: Control of Heavy Loads, dated May 30, 1986.

24. Letter from R. W. Kober, RG&E, to D. M. Crutchfield, NRC, Subject: Control of Heavy Loads, dated March 26, 1984.

25. Letter from R. W. Kober, RG&E, to W. A. Paulson, NRC, Subject: Control of Heavy Loads, dated July 31, 1984.

26. Letter from A. R. Johnson, NRC, to R. C. Mecredy, RG&E, Subject: Safety Evaluation of RG&E's Proposed Criticality Analysis of the Ginna New and Spent Fuel Rack/Consolidated Rod Storage Canisters, dated August 30, 1995.

27. Design Analysis, NSL-0000-DA030, Spent Fuel Pool Heatup Times, Revision 0, dated February 13, 1991.

28. Letter from D. M. Crutchfield, NRC, to J. E. Maier, RG&E, Subject: Insertion of a Higher Enrichment Fuel Assembly Into the Spent Fuel Racks, dated February 8, 1984.

29. Letter from G. E. Lear, NRC, to R. W. Kober, RG&E, Subject: Storage of Consolidated Fuel, dated December 16, 1985.

30. Letter from A. R. Johnson, NRC, to R. C. Mecredy, RG&E, Subject: Issuance of Amendment No. 60 to Facility Operating License No. DPR-18 (TAC No. M92188), dated February 6, 1996.

31. Letter from R. C. Mecredy, RG&E, to A. R. Johnson, NRC, Subject: Technical Specification Improvement Program, dated May 5, 1995 and Attachment: Criticality Analysis of the R. E. Ginna Nuclear Power Plant Fresh and Spent Fuel Racks, and Consolidated Rod Storage Canisters, dated June, 1994.

32. NRC Bulletin 96-02, Movement of Heavy Loads Over Spent Fuel, Over Fuel in the Reactor Core, or Over Safety-Related Equipment, dated April 11, 1996.

33. Letter from R. C. Mecredy, RG&E, to G. S. Vissing, NRC, Subject: Response to NRC Bulletin 96-02, dated May 10, 1996.

34. Rochester Gas & Electric Corporation Safety Evaluation SEV-1082, Revision 1, Spent Fuel Pool Cooling System Lower Suction, dated August 21, 1997.

35. Deleted.

36. Deleted.

37. Letter from R. C. Mecredy, RG&E, to G. S. Vissing, NRC, Subject: Application for Amendment to Facility Operating License, Revised Spent Fuel Pool Storage, dated March 31, 1997.

38. Letter from G. S. Vissing, NRC, to R. C. Mecredy, RG&E, Subject: Issuance of Amendment No. 72 to Facility Operating License No. DPR-18, dated July 30, 1998.

39. Framatome Technologies Report 51-1258768-01, Ginna Spent Fuel Pool Re-Racking Licensing Report, Revision 1, dated February 1997.

40. A. G. Croff, ORIGEN2 - A Revised and Updated Version of the Oak Ridge Isotope Generation and Depletion Code, ORNL-5621.

41. Letter from R. C. Mecredy, RG&E, to G. S. Vissing, NRC, Subject: Response to Request for Additional Information - Spent Fuel Pool (SFP) Modifications - SFP Cooling Concerns (TAC No. M95759), dated November 11, 1997.

42. Letter from G. S. Vissing, NRC, to R. C. Mecredy, RG&E, Subject: Request for Additional Information - Spent Fuel Pool (SFP) Modifications - SFP Cooling Concerns (TAC No. M95759), dated September 9, 1997.

43. Letter from R. C. Mecredy, RG&E, to G. S. Vissing, NRC, Subject: Response to Request for Additional Information (RAI) on the Cooling Aspects of the Spent Fuel Pool Storage Rack Modification (TAC No. M95759), dated May 8, 1998.

44. Letter from G. S. Vissing, NRC, to R. C. Mecredy, RG&E, Subject: Completion of Licensing Action for NRC Bulletin 96-02, "Movement of Heavy Loads Over Spent Fuel, Over Fuel in the Reactor Core, or Over Safety-Related Equipment", dated April 23, 1998.

45. Rochester Gas and Electric Corporation Safety Evaluation SEV-1147, Revision 0, 85°F Maximum Lake Temperature, dated February 2, 2001.

46. NRC Standard Review Plan (SRP) (contained in NUREG-0800), Section 9.1.3, Spent Fuel Cooling and Cleanup System.

47. Letter from D.M. Crutchfield, NRC, to J.E. Maier, RG&E, Subject: Spent Fuel Pool Cooling System modifications (Ginna), dated November 3, 1981.

48. Letter from D.M. Crutchfield, NRC, to J.E. Maier, RG&E, Subject: SEP Topic IX-1, Fuel Storage, dated January 27, 1982.

49. Newmyer, W.D., "Westinghouse Spent Fuel Rack Criticality Analysis Methodology", WCAP-14416-NP-A, Rev.01, November 1996.

50. Letter from T.E. Collins, U.S. NRC to T. Greene, WOG, "Acceptance for Referencing of Licensing Topical Report WCAP-14416-P, Westinghouse Spent Fuel Rack Methodology (TAC NO. M93254)", October 25, 1996.

51. Code of Federal Regulations, Title 10, Part 50, Appendix A, Criterion 62, "Prevention of Criticality in Fuel Storage and Handling".

52. U.S. Nuclear Regulatory Commission, Standard Review Plan, Section 9.1.2, NUREG-0800, July 1981.

53. SCALE 4.3 - Modular Code System for Performing Standardized Computer Analyses for Licensing Evaluation for Workstations and Personal Computers, NUREG/CR-200; distributed by the Radiation Shielding Information Center, Oak Ridge National Laboratory, Oak Ridge, Tennessee.

54. The ROCS and DIT Computer Codes for Nuclear Design, CENPD-266-P-A, Combustion Engineering, Inc.

55. M.N. Baldwin et al., "Critical Experiments Supporting Close Proximity Water Storage of Power Reactor Fuel; Summary Report", BAW-1484-7, July 1979.

56. S.R. Bierman and E.D. Clayton, "Critical Experiments with Subcritical Clusters of 2.35 Wt% ^{235}U Enriched UO_2 Rods in Water at a Water-to-Fuel Volume Ratio of 1.6", NUREG/CR-1547, PNL-3314, July 1980.

57. S.R. Bierman and E.D. Clayton, "Criticality Experiments with Subcritical Clusters of 2.35 and 4.31 wt% U-Enriched UO_2 Rods in Water with Steel Reflecting Walls", Nuclear Technology, Vol. 54, pg. 131, August 1981.

58. International Handbook of Evaluated Criticality Safety Benchmark Experiments, Nuclear Energy Agency and Organization for Economic Cooperation and Development.

59. W. Marshall, et al., "Criticality Safety Criteria", TANS Vol. 35, pg. 278, 1980.

60. ABB Combustion Engineering Nuclear Power, "R.E. Ginna Nuclear Power Plant Criticality Safety Analysis for the Spent Fuel Storage Rack Using Soluble Boron Credit," dated February 2000.

61. ABB Combustion Engineering Nuclear Power, "R.E. Ginna Spent Fuel Pool Boron Dilution Analysis", dated January 2000.

62. Letter from R.C. Mecredy, RG&E, to G.S. Vissing, NRC, Subject: Application for Amendment to Facility Operating License, Credit for Soluble Boron in Spent Fuel Pool, dated March 8, 2000.

63. Letter from G.S. Vissing, NRC to R.C. Mecredy, RG&E, Subject: Amendment Re: Revision to the Storage Configuration Requirements within the Existing Storage Racks and Taking Credit for a Limited Amount of Soluble Boron (TAC No. MA8443), dated December 7, 2000.

64. Letter from E. Meliksetian (Westinghouse) to P. Bamford (RG&E), NF-RG-02-12, Rev. 2, CAD-02-63, Rev. 2, March 8, 2002; Subject: Ginna Revised Radiation Sources for Extended Fuel Management.

65. Design Analysis, DA-NS-2002-027, Rev. 0, "Cycle 30 Radiological Doses for Fuel Handling and Tornado Missile Accidents", Rochester Gas and Electric Corporaion, Ginna Station, dated March 18, 2002.

66. Framatone Technologies (FTI) Document No. 32-1258146-00, "Ginna Re-Rack Radiological Safety Nalayses," January 11, 1997.

67. Letter from M. Korsnick, Ginna, to Document Control Desk, NRC, License Amendment Request Regarding Extended Power Uprate (with Environmental Report), (Letter No. 1001353) dated July 7, 2005.

68. Letter from P. Milano, NRC, to M. Korsnick, Ginna, R.E. Ginna Nuclear Power Plant - Amendment RE: 16.8% Power Uprate (TAC No. MC7382), dated July 11, 2006.

69. Letter from M. Korsnick,Ginna, to R. Clark, NRC, Revised Atmospheric Dispersion Factors (X/Q) and Dose Analysis Results, R.E. Ginna Nuclear Power Plant, July 14, 2004.

70. Letter from D. Skay, NRC, to M. Korsnick, Ginna, "R.E. Ginna Nuclear Power Plant Amendment Re: Modification of the Control Room Emergency Air Treatment System and Change to Dose Calculation Methodology to Alternate Source Term", May 25, 2005.

71. DA-NS-2002-019, Tornado Missile Accident Off-Site and Control Room Doses, Revision 3, dated November 24, 2004.

72. 10CFR50.67, Accident Source Term.

73. Regulatory Guide 1.183, Alternative Radiological Source Terms for Evaluating Design Basis Accidents at Nuclear Power Reactors.

74. Framatome Design Analysis 32-1258074-00, "Ginna Re-Rack T-H Analysis," Revision 0.

75. Letter from M. Korsnick, Ginna, to NRC Document Control Desk, "R.E. Ginna Nuclear Power Plant, Response to Request for Additional Information Regarding Topics," described in letters dated November 3, 2005 and December 19, 2005.

76. **Structural Integrity Associates Inc. Design Analysis, SIR-07-295-NPS; "Evaluation of Spent Fuel Pool for R.E. Ginna Nuclear Power Plant," Revision 0, dated February 2008.**

Table 9.1-1
FUEL PARAMETERS EMPLOYED IN THE CRITICALITY ANALYSIS

Parameter	*Exxon 14x14*	*Westinghouse<[a] 14x14 STD*	*Westinghouse 14x14 OFA/14 x 14 VANTAGE +*
Number of fuel rods per assembly	179	179	179
Rod Zirc-4 (ZIRLO™) clad O.D. (in.)	0.424	0.422	0.400
Clad thickness (in.)	0.030	0.0243	0.0243
Fuel pellet O.D. (in.)	0.3565	0.3669	0.3444
Fuel pellet density (% of theoretical)	95	95	95
Fuel pellet dishing factor	1.187	1.187	1.1926
Rod pitch (in.)	0.556	0.556	0.556
Number of Zirc-4 (ZIRLO™) guide tubes	16	16	16
Guide tube O.D. (in.)	0.524	0.539	0.528
Guide tube thickness (in.)	0.015	0.017	0.019
Number of instrument tubes	1	1	1
Instrument tube O.D. (in.)	0.424	0.422	0.399
Instrument tube thickness (in.)	0.039	0.0240	0.0235

a. Parameters used in criticality analyses for Westinghouse standard 14 x 14 fuel bound the geometry parameters associated with the Ginna Westinghouse 422Vantage+ fuel assemblies.

Table 9.1-2
TORNADO MISSILE ACCIDENT DOSE ANALYSIS ASSUMPTIONS

Parameter	Value
Reactor Power, MWt (including fuel management fector)	1811
Power Peaking Factor	1.75
Number of damaged fuel assemblies Region 1 Region 2	 5 hot, 4 cold 9 cold
Time after reactor shut-down hot assemblies cold assemblies	 100 hours 60 days
Fuel rod gap fractions I-131 other halogens Kr-85 other noble gases	 0.08 0.05 0.1 0.05
Iodine specials above water elemental iodine organic iodide	 0.57 0.43
Pool DF elemental iodine organic iodide particulate Overall Pool DF	 500 1 ∞ 200
Exhaust flow rate, cfm puff (5 second activity release)	 1.11E+08
Iodine removal efficiency for all forms to environment	0
Control Room isolation	No
Control Room filtration operation	No

Table 9.1-2
TORNADO MISSILE ACCIDENT DOSE ANALYSIS ASSUMPTIONS (OFFSITE X/Q)

Boundary	2 hr[a]	0-8 hr	8-24 hr	24-96 hr	96-720 hr
EAB	2.17E-04[b]	-	-	-	-
LPZ		2.51E-05	1.78E-05	8.50E-06	2.93E-06

a. Any two hour period

b. 0 to 1 min tornado value is 1.87E-6

Table 9.1-2
TORNADO MISSILE ACCIDENT DOSE ANALYSIS ASSUMPTIONS (OFFSITE BREATHING RATES)

Boundary	2 hr	0-8 hr	8-24 hr	24-96 hr	96-720 hr
EAB	3.47E-04	-	-	-	-
LPZ		3.47E-04	1.75E-04	2.32E-04	

Table 9.1-3
SPENT FUEL POOL (SFP) COOLING SYSTEM RATING

	Safety Basis Heat Load	*Normal Basis Heat Load*
SFP HEAT EXCHANGER B		
Heat removal capacity, Btu/hr	16×10^6	7.6×10^6
Service water temperature in, °F	80	80
Service water temperature out, °F	100	95
Service water temperature differential, °F	20	15
Pool water temperature, °F	150	120
Service water flow, gpm (approximate)	1600	1000
Pool water flow, gpm (approximate)	1200	1200
SFP HEAT EXCHANGER A		
Heat removal capacity, Btu/hr	7.93×10^6	5.3×10^6
Service water temperature in, °F	80	80
Service water temperature out, °F (approximate)	103	95
Service water temperature differential, °F (approximate)	23	15
Pool water temperature, °F	150	120
Service water flow, gpm (approximate)	700	700
Pool water flow, gpm	610	610
SFP STANDBY HEAT EXCHANGER		
Heat remvoal capacity, Btu/hr	7.93×10^6	5.3×10^6
Service water temperature in, °F	80	80
Service water temperature out, °F (approximate)	103	95
Service water temperature differential, °F (approximate)	23	15
Pool water temperature, °F	150	120
Service water flow, gpm (approximate)	700	700
Pool water flow, gpm	610	610

Table 9.1-4
SPENT FUEL POOL (SFP) COOLING SYSTEM COMPONENT DATA

System design pressure, psig	150
System design temperature, °F	200

Spent fuel pool heat exchanger

Quantity	3
Type	Shell and U-tube
Material, shell/tube	Carbon steel/stainless steel

	SFP HEAT EXCHANGER A	SFP HEAT EXCHANGER B	SFP STANDBY HEAT EXCHANGER
Design, Btu/hr[a]	7.93×10^6	16×10^6	7.93×10^6
Service water flow, design gpm[b]	700	1600	700
Tube flow, design gpm[b]	550	1200	550

Spent fuel pool pump data

Quantity	3
Type	Horizontal centrifugal
Material	Stainless steel

	SFP PUMP A	SFP PUMP B	SFP STANDBY PUMP
Flow, design gpm[b]	610	1200	610
Head, ft H_2O	150	150	150
Motor horsepower	50	100	50

Spent fuel pool

Volume, ft^3 / gallons	34,100 / 255,000
Boron concentration, ppm boron minimum	≥2300

a. Pool temperature at or below 150°F, service water temperature 80°F.

b. Design flow rates represent rated values and do not represent flow limits. Flow limits are greater than or equal to design flowrates.

Table 9.1-5
OFFSITE AND CONTROL ROOM DOSES FOR THE SPENT FUEL POOL TORNADO MISSILE ACCIDENT

	Doses (Rem)	*Limit (Rem)*
CONTROL ROOM DOSE	0.63	5.0
TORNADO MISSILE ACCIDENT IN REGION 1 (100 HRS DECAY)		
Exclusion Area Boundary (0-2 hours)	0.03	6.3
Low Population Zone (0-2 hours)	0.01	6.3

Table 9.1-6

HEAT-UP TIMES ASSOCIATED WITH LOSS OF SPENT FUEL POOL COOLING[a]					
Operating Cooling Loop	**Service Water Temp (°F)**	**Decay Heat Load (MBtu/hr)**	**Time to 180°F in Fuel Pool[b] (hours)**	**Time to 212°F in Fuel Pool[b] (hours)**	**Required Make-up Rate (gpm)**
SFP Loop B (normal) OR	40	23.4	2.6	5.3	48.5
SFP Pump A and SFP	60	19.2	3.1	6.5	39.8
Standby Pump cross-connected to SFP HX B	80	14.9	4.0	8.4	31.1
SFP Loop A (normal) AND	40	27.0	2.4	4.9	52.8
SFP standby Loop	60	22.1	2.7	5.7	45.6
(normal)	80	17.2	3.5	7.3	35.5

a. Structural design temperature limit for SFP is 180°F. The times to 212°F and the boil-off rate at 212°F were calculated as requested by the NRC in *Reference 42*.

b. Initial SFP temperature is 150°F.

Figure 9.1-1 Fuel Handling Structures

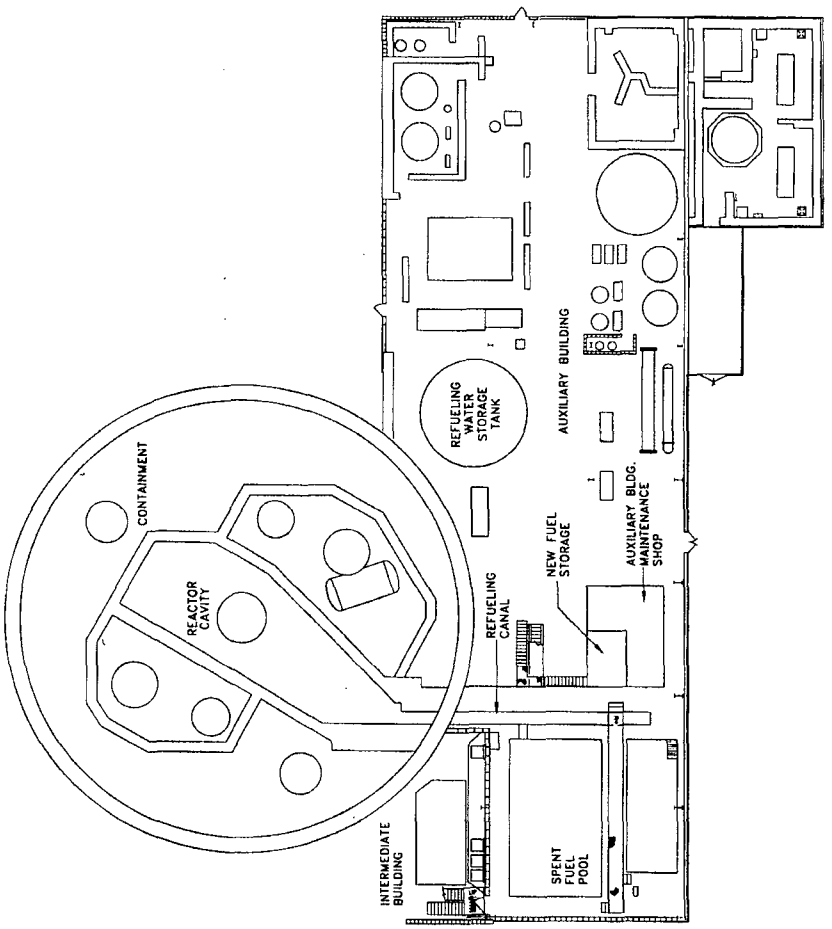

ROCHESTER GAS AND ELECTRIC CORPORATION
R.E. GINNA NUCLEAR POWER PLANT
UPDATED FINAL SAFETY ANALYSIS REPORT
Figure 9.1-1
Fuel Handling Structures
REV. 16 4/01

Figure 9.1-2 Figure DELETED

Figure Deleted

Figure 9.1-3 Arrangement of Spent Fuel Storage Racks

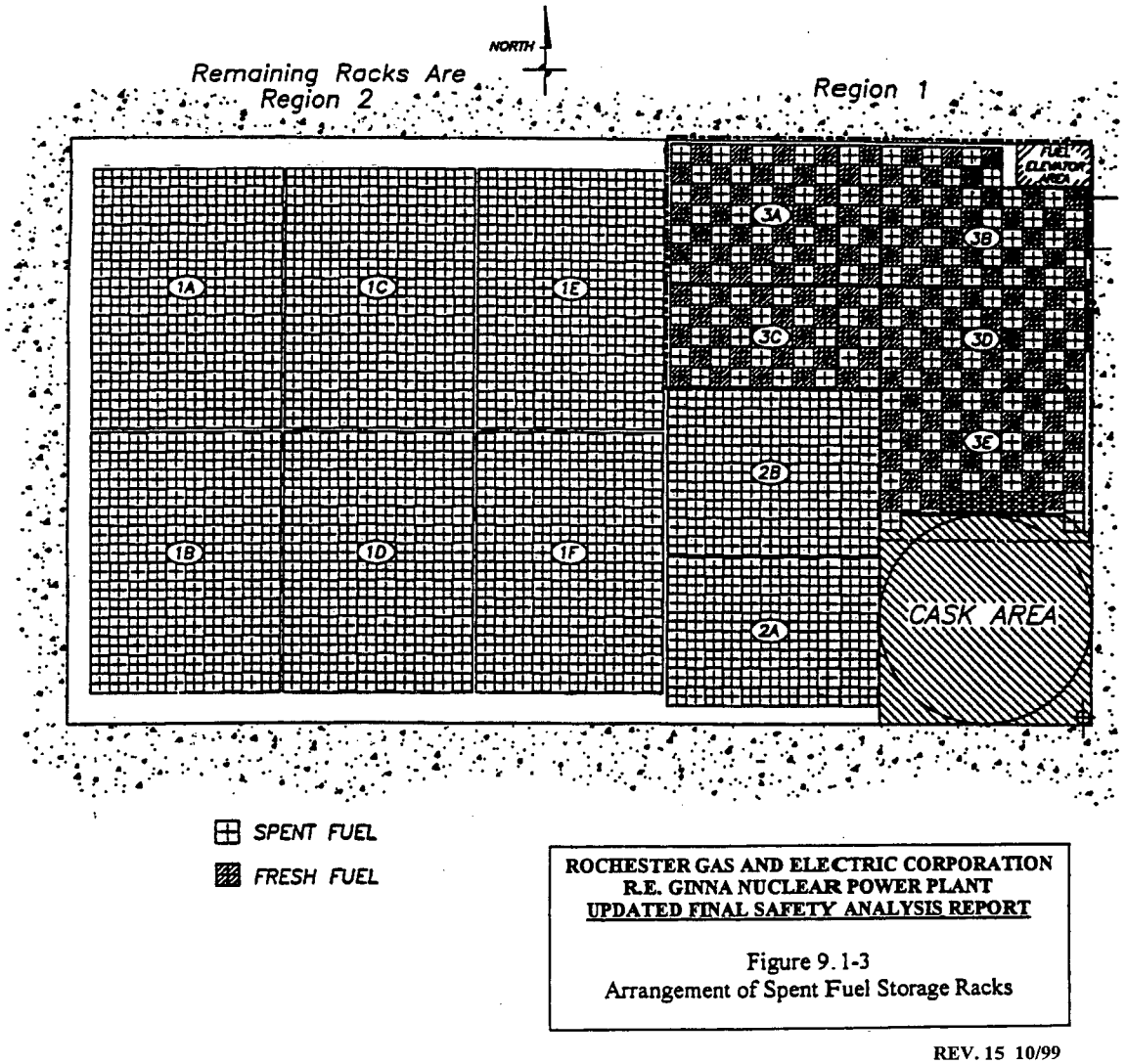

ROCHESTER GAS AND ELECTRIC CORPORATION
R.E. GINNA NUCLEAR POWER PLANT
UPDATED FINAL SAFETY ANALYSIS REPORT

Figure 9.1-3
Arrangement of Spent Fuel Storage Racks

REV. 15 10/99

Figure 9.1-4 Figure DELETED

Figure Deleted

Figure 9.1-5 Figure DELETED

Figure Deleted

Figure 9.1-6 Figure DELETED

Figure Deleted

Figure 9.1-7 Spent Fuel Pool Cooling Cycle

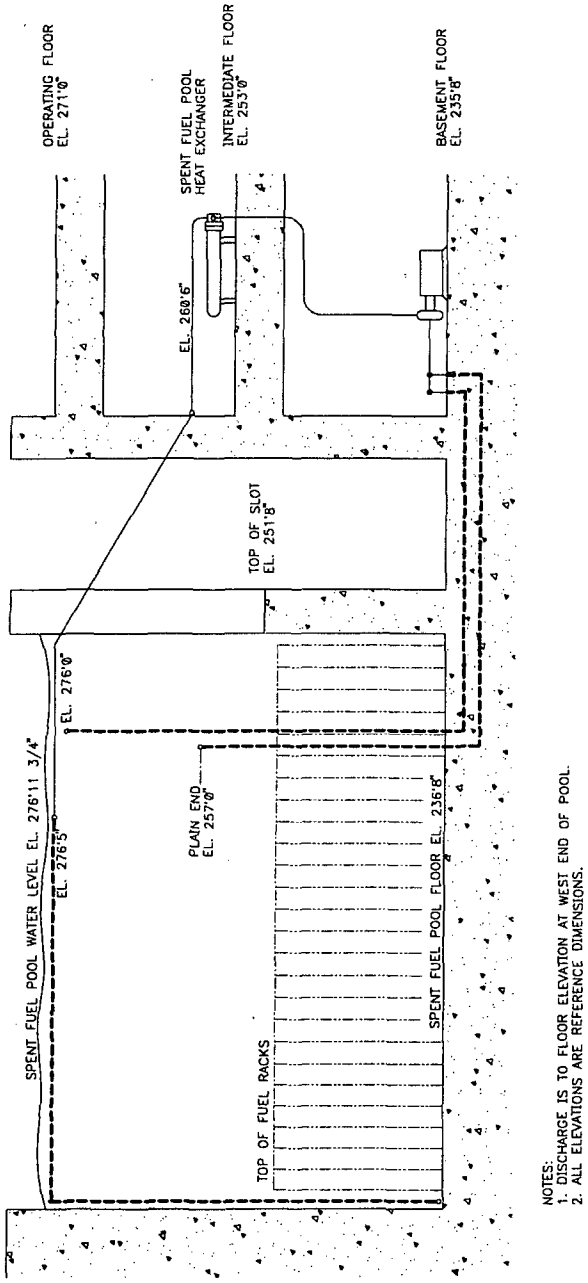

ROCHESTER GAS AND ELECTRIC CORPORATION
R.E. GINNA NUCLEAR POWER PLANT
UPDATED FINAL SAFETY ANALYSIS REPORT

Figure 9.1-7
Spent Fuel Pool Cooling Cycle

REV. 15 10/99

Figure 9.1-8 Figure DELETED

Figure Deleted

Figure 9.1-9 Manipulator Crane

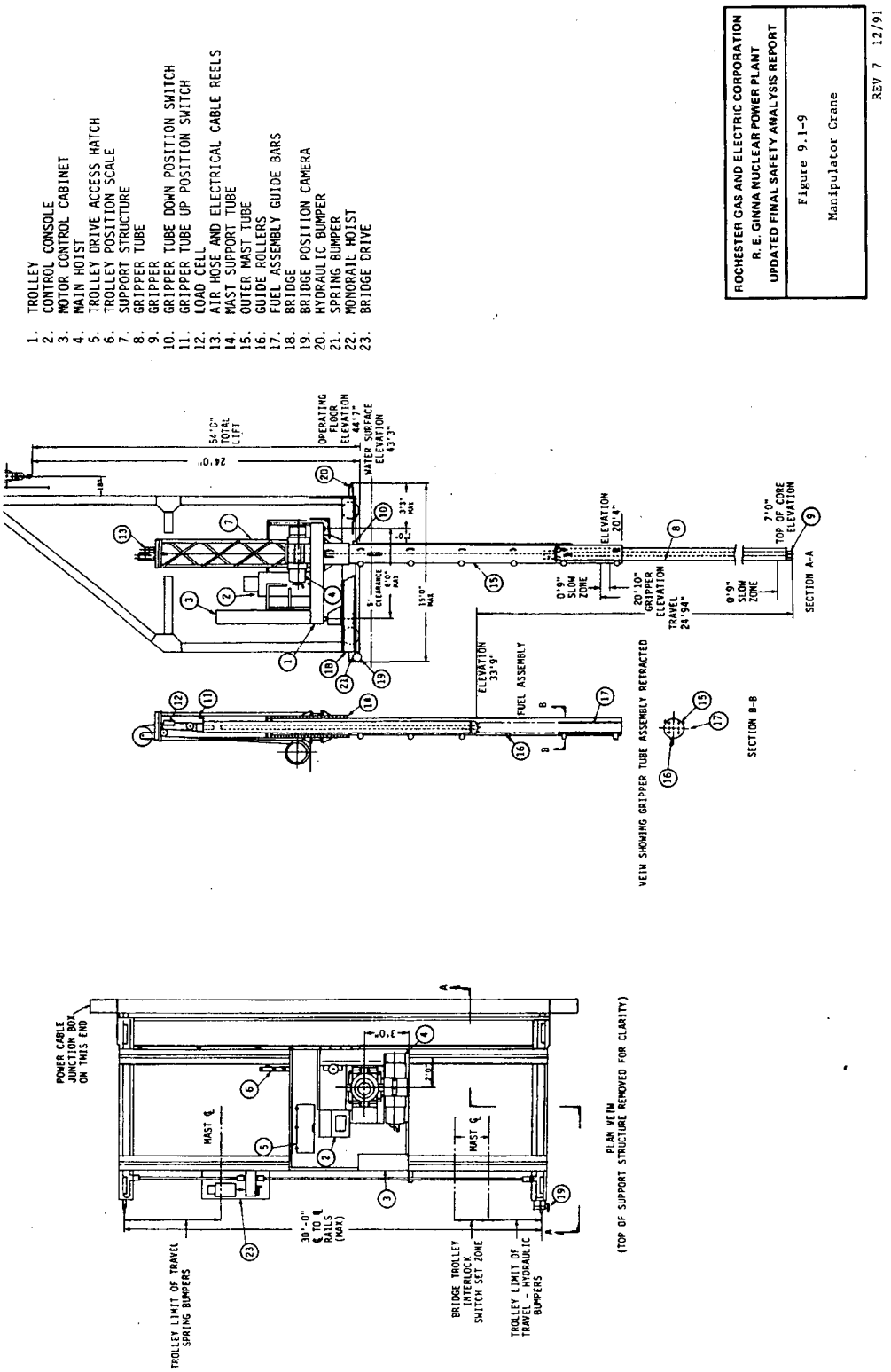

Figure 9.1-10 Reactor Vessel Head Lifting Device

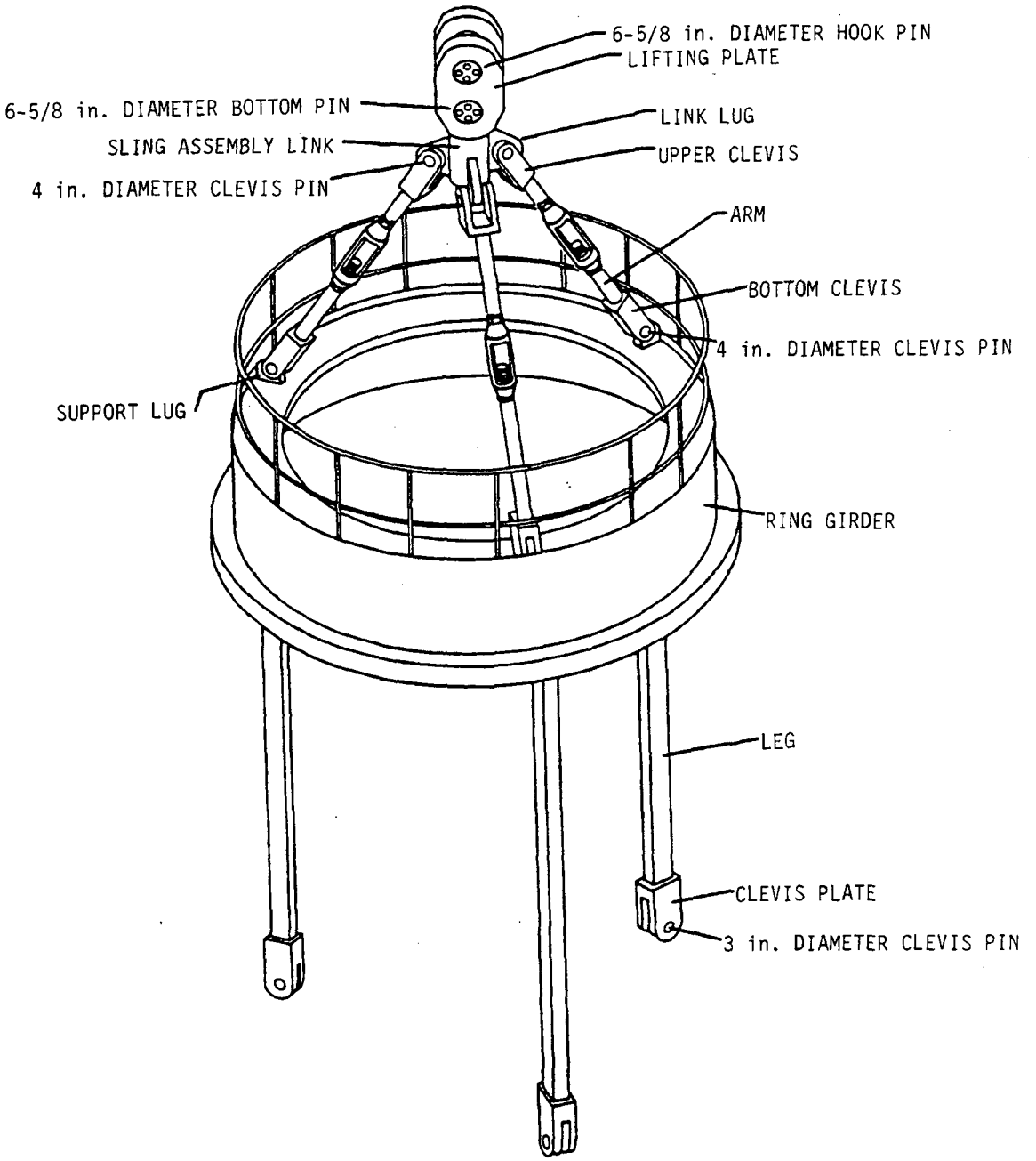

ROCHESTER GAS AND ELECTRIC CORPORATION
R.E. GINNA NUCLEAR POWER PLANT
UPDATED FINAL SAFETY ANALYSIS REPORT

Figure 9.1-10
Reactor Vessel Head Lifting Device

Figure 9.1-11 Fuel Handling Devices

GINNA/UFSAR
CHAPTER 9 AUXILIARY SYSTEMS

Figure 9.1-11 Fuel Handling Devices

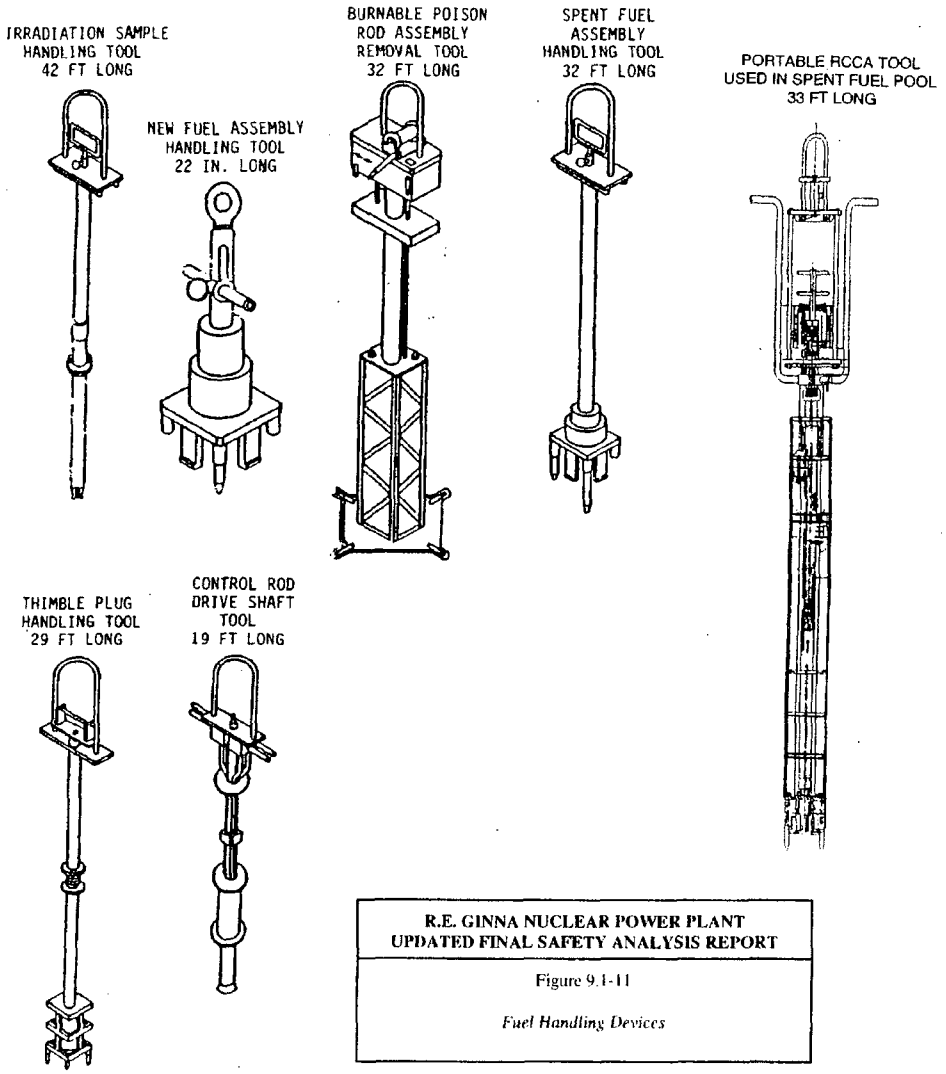

R.E. GINNA NUCLEAR POWER PLANT UPDATED FINAL SAFETY ANALYSIS REPORT
Figure 9.1-11 *Fuel Handling Devices*

9.2 WATER SYSTEMS

9.2.1 SERVICE WATER (SW) SYSTEM

9.2.1.1 Design Bases

The service water (SW) system takes suction from Lake Ontario via the screen house and supplies cooling water to various turbine plant loads as well as auxiliary reactor plant loads. The system supplies seal water to the circulating water pumps and the vacuum pumps, flushing water to the traveling screens and makeup water to the fire water storage tank via the fire booster pump. Service water (SW) is the normal supply to the standby auxiliary feedwater system and an alternate supply to the preferred auxiliary feedwater system. The system is designed to provide adequate cooling to critical and noncritical loads during MODES 1 and 2 and to critical loads during accident conditions. The system normally discharges back into Lake Ontario via the discharge canal. A discharge line to Deer Creek is available for selected Auxiliary Building SW loads.

The service water (SW) system consists of four service water (SW) pumps, a single loop supply header, isolation valves, and a normal and standby discharge header. The physical design of the SW system is such that four(4) pumps, two(2) from each class 1E electrical bus (Buses 17 and 18), supply the SW loop header. All portions of the service water (SW) system (pumps, piping, etc.) serving safeguards equipment are designed as Seismic Category I. All other portions of the service water (SW) system serving nonsafety loads are designated as nonseismic and are capable of being isolated from the Seismic Category I portion.

9.2.1.2 Description

9.2.1.2.1 General Description

The service water (SW) loop header supplies the cooling water to all safety related and nonsafety related components. The nonsafety related and long-term safety functions (e.g., component cooling water heat exchangers) can be isolated from the loop header through use of redundant motor operated isolation valves. These valves automatically close on a coincident safety injection signal and undervoltage signal on Buses 14 and 16.

The system is sized to ensure adequate heat removal based on the highest expected temperatures of cooling water, maximum loadings, and leakage allowances. The system is monitored and operated from the control room. Isolation valves are incorporated in all service water (SW) lines penetrating the containment.

The service water (SW) system flow diagram is shown in Drawings 33013-1250, 33013-1251, and 33013-1925. Drawing 33013-1250, Sheets 1 through 3 is the safety-related service water (SW) system P&ID. Drawing 33013-1251, Sheets 1 and 2 is the non-safety-related service water (SW) system P&ID. Drawing 33013-1925 is the service water (SW) system P&ID for the instrument air compressors and after coolers, which are supplied by the non-safety-related portion of the service water (SW) system.

The four service water (SW) pumps are located in the screen house. They are two-stage, vertical turbine pumps (original specified rating of 5300 gpm each, 1760 rpm, 198 ft (total dis-

charge head), and 308 brake horsepower). Each pump has a clip-on type basket strainer installed on its suction end bell. The service water (SW) pumps were originally supplied with 300-hp motors. Between 1995 and 1997, all four motors were replaced with 350-hp motors that have anti-reverse rotation devices. An evaluation showed that this configuration met the design and performance requirements of the system. Periodic service water (SW) pump testing ensures that the inservice testing (IST) program performance requirements are satisfied.

The service water (SW) system circulates water from the screen house on Lake Ontario to various heat exchangers and systems inside the containment and the auxiliary, intermediate, turbine, and diesel generator buildings. These buildings are Seismic Category I structures except for the turbine building. Two or three of the pumps are generally in use to carry the required normal cooling load. Table 9.2-1 lists the loads supplied by the service water (SW) system.

During MODES 1 and 2, the service water (SW) system supplies flow to all necessary loads except pump suction flow to the preferred auxiliary feedwater and standby auxiliary feedwater pumps (SAFW). During residual heat removal operation for a normal plant cooldown, almost all noncritical loads may be removed from the service water (SW) system, if necessary. Following a safeguards actuation signal (with bus undervoltage) the service water (SW) system would continue to supply all required critical loads except the supply to the preferred auxiliary feedwater and standby auxiliary feedwater pumps (SAFW), which require operator action to receive service water (SW) flow.

The fire protection system can be used as a backup for the service water (SW) system supply to spent fuel pool (SFP) heat exchanger A, the standby spent fuel pool (SFP) heat exchanger, either component cooling water (CCW) heat exchanger (under emergency, beyond design basis conditions only), preferred auxiliary feedwater pumps, standby auxiliary feedwater pumps (SAFW), and the diesel generator lube-oil coolers and jacket water heat exchangers via temporary hoses.

Originally, plant load requirements dictated two or three pumps for normal full load, one pump for accident conditions during the injection phase, and two pumps for accident conditions during the recirculation phase. Based on subsequent analyses, a single service water (SW) pump has been shown to provide adequate cooling to all loads during the recirculation phase, coincident with nonessential load isolation. In January of 1999, the NRC issued a Safety Evaluation Report (SER) accepting the results of RG&E's evaluations (*Reference 14*). However, as a result of performing the power uprate to 1775 MWt, the required SW Pumps needed during the re-circulation phase of a design basis LOCA was modified from one operating SW Pump to two operating SW Pumps. The number of SW Pumps required during the injection phase of a design basis LOCA after uprate remains as one SW Pump.

The post accident containment pressure and critical reactor integrity parameters are not affected since the limiting conditions for these parameters occur during the injection phase of the design basis event. Typical service water (SW) flows supplied during normal operation and reference design flows are shown in Table 9.2-2. Service water (SW) flow design limits for critical loads are evaluated based on heat removal requirements and documented by engineering design analyses. These tabulated major loads on the service water (SW) system

formed the basis for the sizing of the service water (SW) pumps. Service water (SW) flow rates analyzed for the various cases evaluated are consistent with the assumed single failure for each case. See Section 6.2.2 for details of these cases. Electric power to the service water (SW) pumps is provided by 480-V safeguards buses 17 and 18. Following a safety injection (SI) signal and/or loss of offsite power, one service water (SW) pump is automatically started on each diesel generator.

9.2.1.2.2 Service Water System Design

The service water (SW) system consists of a single loop header. Four(4) pumps, two(2) from each class IE electrical bus (Buses 17 and 18) is arranged on a common piping header which then supplies the service water (SW) loop header. A service water (SW) train is based on electrical source only. Cross-tie valves are located in the loop header which could be used to split the header. Some of the cross-tie valves are operated normally open, while others are operated normally closed; this functions to balance service water (SW) system flows and pressures. The loop header is designed so that no single failure will cause a plant shutdown.

The service water (SW) system piping is arranged so that all pumpscan provide flow to the critical loads identified on Table 9.2-2 (and also to the noncritical reactor compartment coolers and containment penetration coolers). During normal operation, branch headers supply various noncritical loads (see Table 9.2-1). Six pairs of motor-operated valves are provided to automatically isolate the loop header from the component cooling water (CCW) heat exchangers, spent fuel pool (SFP) heat exchangers, and the noncritical loads (excepting the noncritical reactor compartment coolers and containment penetration coolers); in addition, these valves can be controlled remotely from the control room. The redundant valves in each pair are powered from independent 480-V safeguards buses (buses 14 and 16). The motor-operated valves within each independent train will automatically receive a close signal following a safety injection (SI) signal concurrent with a trip of the normal supply breaker (ie., undervoltage) on their associated 480-V safeguards bus. These valves will then close automatically upon reenergization of their associated 480-V safeguards electrical bus by its diesel generator.

The two component cooling water (CCW) heat exchangers, the "A" spent fuel pool (SFP) cooling heat exchanger, the safety-related pump motor coolers located in the auxiliary building, and the standby auxiliary feedwater (SAFW) pump room cooling units have redundant service water (SW) discharge lines, thus providing Seismic Category I redundant service water (SW) supply and discharge lines to these loads. The primary service water (SW) discharge line discharges to the discharge canal and then to Lake Ontario. The redundant service water (SW) discharge line discharges to a Seismic Category I discharge structure, then to Deer Creek and to Lake Ontario. The redundant service water (SW) discharge line is normally in standby; however, it is occasionally placed in service for such activities as surveillance testing or maintenance work.

9.2.1.2.3 Service Water System Initiation on Loss of Offsite Power

The service water (SW) pumps are connected to the 480-V safeguards buses that can be supplied by the emergency diesels in the event of a loss of all offsite power. One service water (SW) pump per diesel is automatically started on either an undervoltage condition or a safety

injection (SI) signal. For a safety injection (SI) signal coincident with an undervoltage condition, the service water (SW) system is designed to supply cooling water only to the required critical loads by means of automatically closing redundant motor-operated non-essential load isolation valves, with the exception that the noncritical reactor compartment coolers and containment penetration coolers are not isolated. Under these conditions, any one pump using emergency power is capable of supplying the required cooling capacity to the injection phase loads shown in Table 9.2-2. On a loss of ac power to the 480-V safeguards buses, the service water (SW) pumps restart automatically upon reenergization of the buses. They do this under the following conditions:

A. Following an undervoltage condition on a safeguards bus, the selected service water (SW) pump will restart after a 40-sec time delay following reenergization of the bus by the emergency diesel.

B. On a safety injection signal, two service water (SW) pumps will start after 15-sec and 17-sec time delays for trains A and B, respectively, following reenergization of the buses by the emergency diesel (assuming an undervoltage condition existed), or from the time of the safety injection signal, if no undervoltage existed.

The diesel generators employ jacket cooling and shell and tube heat exchangers. Adequate heat absorption capacity is provided to operate until the service water (SW) system starts.

The motor driven auxiliary feedwater pumps (MDAFW) are equipped with ball bearings and require only supplementary cooling to the thrust-bearing jacket. The pumps are designed to operate satisfactorily until the service water (SW) system starts.

The auxiliary feedwater pump drive turbine has an oil reservoir which provides a supply of cool oil until the service water (SW) system starts. Tests conducted to determine the capacity of the oil cooler have demonstrated that the oil remains within acceptable temperature limits for at least 2 hours even without service water (SW) flow. Refer to Section 10.5.4.2 for details of this test.

9.2.1.2.4 Containment Cooling Coils

The containment cooling coils are provided with both automatic and manual temperature controls. A three-way selector valve (V-15532) is provided for this purpose. The automatic position of this valve allows normal automatic operation of the air-operated containment coolers service water (SW) outlet flow control valve (AOV-4561). In the manual mode, signal air to AOV-4561 can be controlled through a regulator valve (V-15531). The safety injection signal to AOV-4561 is not affected while in the manual mode. If the containment temperature rises above 100°F in the manual mode, regulator valve V-15531 can be repositioned as required to reduce containment temperature.

Automatic temperature control is provided for the containment cooling coils. An automatic bypass valve is provided around the containment cooling coil temperature control valve and both valves will trip wide open on a safety injection signal. Both the control and the automatic bypass valves are of the fail open type. Manual globe valves are provided on the outlet side of most service water (SW) system cooling services. Exceptions are the containment coolers, spent fuel pool (SFP) heat exchanger B, component cooling water (CCW) heat

exchangers, and reactor compartment coolers which have butterfly valves that can be used for flow adjustment and balancing.

Indicating alarms are provided to monitor each fan cooler discharge for flow and temperature. A radiation-indicating alarm is located on the discharge line downstream of the discharge header. In addition, each fan cooler inlet is provided with a pressure indicator.

9.2.1.2.5 Radiation Monitors

A common radiation monitor is provided in the service water (SW) discharge line from the four containment coolers and the reactor compartment coolers. Individual coolers may be manually isolated to determine which unit is leaking if the monitor indicates radioactivity. Radiation monitors are also provided in the service water (SW) discharge lines from the spent fuel pool (SFP) cooling system heat exchangers.

9.2.1.2.6 Service Water Fouling

Lake Ontario has an infestation of zebra mussels, which makes Ginna Station's cooling systems potentially vulnerable to plugging. To control this problem, RG&E has installed sodium hypochlorite injection lines in the screen house inlet plenum and service water (SW) pump bays to prevent colonization of zebra mussels in the screen house bays. Chlorine monitoring stations were also installed to monitor chlorine concentrations in the service water (SW) supply headers in the screen house basement; in service water (SW) discharge headers in the turbine building, intermediate building, and auxiliary building; and in the discharge canal. The sodium hypochlorite injection system includes four injection pumps, two of which may discharge into the inlet plenum and serve the circulating water system and two of which may discharge into the service water (SW) pump bay and serve the service water (SW) system (see Drawing 33013-1885, Sheet 2). Either of the service water (SW) sodium hypochlorite injection pumps is capable of meeting the total service water (SW) demand.

Based on zebra mussel biofouling experienced in 1991, the diesel generator jacket water heat exchangers and turbine lube-oil coolers were identified as being particularly susceptible to zebra mussel fouling. Valves with fire hose connections on the service water (SW) discharge and supply sides of these heat exchangers and coolers provide backflushing capability to clear out the zebra mussels. Side stream monitoring stations (bio-boxes) on the supply and discharge sides of both the circulating water and non-safety-related service water (SW) systems allow monitoring of biological growth (particularly zebra mussels) and chlorine effectiveness.

NRC Generic Letter 89-13 requests licensees to implement a surveillance and control program for the service water (SW) system to reduce the incidence of flow blockage problems as a result of biofouling and conduct a test and retest program to verify the heat transfer capability of safety-related heat exchangers cooled by service water (SW). Ginna Station has equipped the spent fuel pool (SFP) cooling B heat exchanger, component cooling water (CCW) heat exchangers, standby auxiliary feedwater pump (SAFW) room coolers, diesel generator coolers, and containment recirculating fan coolers with pressure and temperature connections and instrumentation to support a heat transfer capability and performance testing program. This installation is part of the Ginna Station Service Water System Reliability

Optimization Program, which also includes intake structure inspection, service water (SW) and lake water sampling, and service water (SW) system flushing and cleaning programs and the above chlorination program. The Service Water System Reliability Optimization Program (SWSROP) was established to define the techniques, equipment, methods, and responsibilities that are used to ensure that the service water (SW) system performs the following functions: transfer the necessary heat from safety related equipment to the ultimate heat sink under both normal and accident conditions, provide a source of water to the preferred auxiliary feedwater system and the standby auxiliary feedwater system for decay heat removal, and support reliable and economic operation of Ginna Station. The program fulfills the recommendations of Generic Letter 89-13.

9.2.1.3 Design Evaluation

The service water (SW) system is designed to prevent a single active failure from curtailing normal station operation. As will be noted from *Drawings 33013-1250* and *33013-1251*, the 20-in. service water (SW) supply loop is isolated by normally closed loop isolation valves (4610 and 4779) and provides split flow to the safety-related component cooling water (CCW) heat exchangers and spent fuel pool (SFP) heat exchangers. Certain cross-tie valves are open to provide a balanced flow to the four containment fan coolers (valves 4639 and 4756) and to the two emergency diesel generators (valves 4760 and 4669). Supply lines to the safety-related pump area coolers in the auxiliary building and to the nonsafety-related reactor compartment coolers are also cross-tied. The system in this configuration is consistent with the analysis of the service water (SW) loads during accident conditions and procedures used during MODES 1 and 2. The service water (SW) loop header supplies the cooling water to all safety related and non-safety related components. The non-safety related and long term safety functions (e.g., component cooling heat exchangers) can be isolated from the loop header through use of redundant motor operated isolation valves. These valves automatically close on a coincident safety injection signal and undervoltage signal on buses 14 and 16.

In addition to the loop isolation valves, each component also has individual isolation valves to permit isolating any piece of equipment from the system.

The design basis for the service water (SW) system includes design against a single active failure only; therefore, discussions relative to passive failures (i.e., critical pressure boundary pipe crack, *Reference 1*) are provided for information only.

From a system reliability standpoint, service water (SW) flow required for long term safety functions (e.g., component cooling water (CCW) heat exchangers) has the capability of being provided by means of manual operation of the normally closed loop isolation valves (4610 and 4779), adding system operation flexibility. In the normal system alignment, no single active or passive failure could result in the loss of service water (SW) flow to redundant critical loads, although the noncritical reactor compartment coolers could both be partially disabled by a single passive failure.

The service water (SW) system is a moderate energy system; therefore, a passive pipe failure would probably result in a leak rather than a complete pipe rupture. Using the method described in *Reference 1*, the estimated leakage for a service water (SW) system header is 585

gpm for a 20-in. header at 75 psig. Although this leak may cause a flooding problem, the supply function of the affected header would not be significantly impaired (*Reference 2*). A leak from the 2.5-in. supply line to the noncritical reactor compartment coolers would result in the loss of about 25 gpm. This leak rate would not completely disable the coolers, each of which normally receives about 45 gpm of service water (SW) flow. Leaks were reviewed as a comparison to the Standard Review Plan; however, the service water (SW) system design is based upon ensuring that post-loss-of-coolant accident (post-LOCA) requirements are met, assuming a single active failure (AIF-GDC 41).

Double valves in series are provided for redundancy to automatically isolate nonessential service during an incident in case of the failure of a motor-operated valve.

All control valves used in the service water (SW) system fail in the open position. The control valve shown in the containment cooler discharge line is bypassed with a spring-loaded, fail open, quick action valve which will automatically open in the event of an accident or any malfunction of the valve closing signal system.

9.2.1.4 Postaccident Conditions

Minimum postaccident injection phase operating requirements are met with one pump and one loop header system (see Section 9.2.1.2.1). The remote operated isolation valves permit isolation of all noncritical services for one pump operation with the exception that the noncritical reactor compartment coolers and containment penetration coolers are not isolated. During transfer to the sump recirculation phase post-LOCA, the component cooling water (CCW) heat exchangers are provided with service water (SW) flow; therefore, a second service water (SW) pump is utilized in the analysis to accommodate this additional load. The motor-operated valves which are opened to supply service water (SW) to the component cooling water (CCW) heat exchangers also provide flow to branch headers that lead to the spent fuel pool (SFP) heat exchangers. Since the branch headers are open during normal power operation, the spent fuel pool (SFP) heat exchangers would be provided with service water (SW) flow during the recirculation phase unless operator action is taken. Emergency operating procedures provide guidance to operators for the isolation of the spent fuel pool (SFP) heat exchangers, if necessary, to ensure adequate flow is provided to the component cooling water (CCW) heat exchangers.

9.2.1.4.1 Recirculation Phase

Pre-Uprate

During the recirculation phase post-LOCA the service water (SW) loads dictate operation of two service water (SW) pumps to accommodate the additional component cooling water (CCW) heat exchanger loads. The use of two service water (SW) pumps allows the flow for each pump to operate closer to its rated flow of 5300 gpm, as compared to the flow of only one pump operating in a similar mode. Analyses have been performed assuming only one service water (SW) pump in operation in the recirculation phase post-LOCA. This condition is assumed to result from the failure of an emergency diesel generator based on an initial condition where only two of the four service water (SW) pumps were available as allowed by the Technical Specifications. The results showed that the containment **temperature and pres-**

sure response was within the limits allowed (Figures 6.1-1 and 6.1-2 **respectively**) (*Reference 3*). Although the service water (SW) flow resulting from a single operating pump would be beyond its rated flow, it would still be less than its runout condition.

In their Safety Evaluation Report (SER) dated January 29, 1999, (*Reference 14*), the NRC concurred that one service water pump was acceptable for post-LOCA recirculation phase cooling. Although not required, the option to utilize the bus tie breaker between 480-V safeguards ac buses 17 and 18 during the recirculation phase post-LOCA in order to provide power to two service water (SW) pumps from a single diesel generator is retained, after appropriate evaluation by Technical Support Center personnel. See also Section 8.3.1.1.6.6.

Uprate

However, as a result of performing the power uprate to 1775 MWt, the required SW Pumps needed during the re-circulation phase of a design basis LOCA was modified from one operating SW Pump to two operating SW Pumps. The bases for the Service Water Technical Specification LCO has been revised to identify that two Service Water Pumps in each SW loop are required to be operable for the SW loop to be considered operable.

9.2.1.4.2 Limiting Steam Line Break Events

The accident that produces the limiting containment integrity (peak pressure) response is not a LOCA but a steam line break. See UFSAR Section 6.2.1.2.3 for a discussion of the cases analyzed and assumptions. Previous analyses have determined that a limiting assumption for containment pressurization due to a steam line break is no loss of off-site power. This assumption causes the two Reactor Coolant Pumps to continue to operate throughout the transient. In combination with this assumption, containment air cooler heat removal capability is based on assuming only one service water pump in operation. This combination of conservative assumptions ensures that the resulting containment pressurization analysis results are bounding. Therefore, only one service water pump is needed to mitigate the effects of a steam line break inside containment. Since a steam line break does not result in loss of reactor coolant inventory, operation of the service water system in a recirculation phase is not entered.

9.2.1.4.3 Accident Considerations With Offsite Power Available

The design basis accident analysis parameters affected by the flow capability of the service water (SW) system are fuel peak clad temperature (LOCA), containment pressure integrity (LOCA and steam line break), and equipment qualification (LOCA). For fuel peak clad temperature analyses, SW flow impacts the containment back-pressure that exists during the blowdown and reflood phase of a LOCA. As discussed in UFSAR Section 15.6.4.2.3.2, a lower containment backpressure reduces the core reflooding rate due to the increased difficulty in venting steam as a result of increased steam binding within the reactor and reactor coolant system. This in turn maximizes peak clad temperature. Therefore, for calculating minimum containment back-pressure to support LOCA analyses, service water system flow is maximized so as to maximize flow to the containment air coolers. Therefore, off-site power is assumed to be available for this analysis. Additionally, the minimum back-pressure analysis assumes operation of all four containment air cooler and minimum service water temperature. This set of assumptions maximize the heat removed from containment by the containment air

coolers and thereby result in minimizing the containment back-pressure that is used as input into the LOCA peak cladding analyses described in UFSAR Section 15.6.4.

For containment integrity the limiting parameters to be maintained following a break are containment pressure and containment temperature. The steam line break produces the peak containment pressure results for Ginna. As previously discussed, loss of off-site power is not assumed for steam line breaks so as to maximize energy release from operating reactor coolant pumps. Therefore, other single failures are assumed. Typically, although failure of one service water pump would result in reduced flow it is not limiting, since four containment air coolers would be still operating as well as two containment spray pumps. The additional margin gained from the two operating pumps and operation of four containment air coolers compensate for the reduction in SW flow to the containment air coolers. At uprate the limiting single failure for a steam line break is a vital bus failure as described in UFSAR Section 6.2.1.2.3.

The LOCA is the limiting accident related to the environmental qualification (EQ) temperature limits shown in UFSAR Figure6.1-1. The results shown in Figure6.1-1 are based on assuming loss of off-site power with a single failure of one emergency diesel generator. Therefore, the results are based on one SW pump operating during the injection phase of a design basis LOCA; and, two SW pumps operating during the recirculation phase of the LOCA. The results are also based on assuming a maximum service water temperature of 85°F. Although the uprate temperature at 24 hours after a design basis LOCA is greater than the EQ profile for a short period of time, the long term accident temperature drops below the qualification profile. An aging equivalency analysis was performed for a range of activation energies which demonstrated that the existing equipment qualification profile bounds the uprate accident profile (*Reference 15*).

9.2.1.4.4 Postulated Service Water Pump Discharge Check Valve Failure

In a configuration with two service water (SW) pumps in operation, if one of the pumps trips or is stopped and its discharge check valve fails to close, a reverse flowpath would be created through this idle pump. The start of another service water (SW) pump would allow reverse flow through this idle pump and reduce the service water (SW) flow delivered to the system loads to less than normal flow for two-pump operation. Analysis has shown, though, that the minimum service water (SW) flow delivered to the system loads for this configuration will exceed that of a single service water (SW) pump. Therefore, the postulated discharge check valve failure, which is a passive failure, is less limiting than either the failure of a service water (SW) pump or the failure of a diesel generator assumed in the LOCA and steam line break analyses.

9.2.1.5 Tests and Inspections

All system components were hydrostatically tested prior to station startup and periodic inspections are performed during operation. All electrical components, switchovers, and starting controls are tested periodically.

Ginna Station has equipped service water (SW) system header A with a 20-in. removable flange for periodic underground piping inspection. This access point located in the screen

house basement, in addition to a removable section of piping located in the control building air handling room, allows for periodic robotic inspection of the condition of the underground concrete liner of the service water (SW) system header A piping running from the screen house to the auxiliary building.

Ginna Station has instituted a program for periodic performance testing, inspection, or cleaning of critical safety related service water (SW) heat exchangers. Testing and/or cleaning frequencies were established based on previous testing or inspection, consistent with Generic Letter 89-13 guidance.

9.2.2 COMPONENT COOLING WATER (CCW) SYSTEM

The component cooling water (CCW) system is shown in Drawing 33013-1245 and 33013-1246, Sheets 1 and 2.

9.2.2.1 Design Bases

The component cooling water (CCW) system is designed to remove heat from plant components during plant operation, plant cooldown, and during postaccident conditions. Component cooling water circulates through parallel flow paths into various components where it picks up heat from other systems and transfers the heat to the service water (SW) system via the component cooling water (CCW) heat exchangers. The component cooling loop serves as an intermediate system between the radioactive fluid systems and the service water (SW) system. This arrangement reduces the probability of radioactive fluid leakage to the environment via the service water (SW) system. The system design provides for the detection of radioactivity entering the system from any of the components serviced and includes the ability to isolate any component. Active system components that are relied upon to perform the cooling function are redundant.

The component cooling loop is a closed system inside containment. Makeup water is taken from the reactor makeup water transfer pumps and delivered to the component cooling surge tank. A backup source of water is provided from the demineralized water system.

All piping and components of the component cooling water (CCW) system are designed to the applicable codes and standards listed in Table 3.2-1. The component cooling water system contains a corrosion inhibitor to protect the carbon steel piping.

9.2.2.2 System Design and Operation

Component cooling is provided for the following heat sources:

A. Residual heat removal heat exchangers (residual heat removal system).

B. Reactor coolant pumps and motors (reactor coolant system).

C. Nonregenerative heat exchanger (chemical and volume control system).

D. Excess letdown heat exchanger (chemical and volume control system).

E. Seal-water heat exchangers (chemical and volume control system).

F. Boric acid recycle evaporator (chemical and volume control system).

G. Sample heat exchanger (sampling system).

H. Waste evaporator condenser (waste disposal system) (system physically removed in 1999).

I. Waste gas compressors (waste disposal system).

J. Reactor support cooling pads.

K. Residual heat removal pump mechanical seal coolers and bearing water jackets (residual heat removal system).

L. Safety injection pump mechanical seal coolers (safety injection system).

M. Containment spray pump mechanical seal coolers (safety injection system).

At the reactor coolant pump, component cooling water (CCW) removes heat from the bearing oil and the thermal barrier. Since the heat is transferred from the component cooling water (CCW) to the service water (SW), the component cooling loop serves as an intermediate system between the reactor coolant and service water (SW) cooling systems and ensures that any leakage of radioactive fluid from the components being cooled is contained within the plant.

During normal full-power operation, one component water pump supplies flow to both component cooling water heat exchangers, however, cooling one component cooling water heat exchanger can accommodate the heat removal loads. Therefore, especially at lower service water (lake) temperatures, service water may be limited or isolated to one component cooling water heat exchanger. The standby pump provides a 100% backup during MODES 1 and 2. Both pumps and both heat exchangers are utilized to remove the residual and sensible heat during plant shutdown. If one of the pumps or one of the heat exchangers is not operative, safe operation of the plant during cooldown is not affected; however, the time for shutdown is extended.

Based upon the discussion provided above, increasing the component cooling water (CCW) heat exchanger service water (SW) inlet temperature to 85°F has no adverse impact on normal plant operation or plant cooldown. For both scenarios, an increase in SW flow to the component cooling water (CCW) heat exchangers would compensate for the impact of the increased inlet temperature. Additionally, for a plant cooldown scenario, safe operation of the plant during cooldown is not affected; however, the time for shutdown is extended. Normal plant cooldown at uprate with an 85°F lake temperature was evaluated by Westinghouse (*Reference 16*) and demonstrated that plant cooldown to cold shutdown conditions were obtained. Although the time required was increased over that achievable with the pre-uprate power level, it was determined that the operation of one CCW Pump and one RHR Pump were still capable of placing the RCS in Mode 5 in less than 30 hours after a reactor shutdown.

For design basis accident scenarios, the reduction in CCW heat exchanger heat removal capability, in combination with the reduced containment recirculation fan cooler (CRFC) heat removal capability, would slightly decrease the long term cooling capability of containment following the transfer to the post-LOCA recirculation phase. As discussed in Section 9.2.1.4.3, the resulting impact on the containment cooldown transient has been determined to be bounded by the design basis post-LOCA environmental qualification (EQ) temperature envelope shown in Figure 6.1-1.

The surge tank accommodates expansion, contraction, and inleakage of water, and ensures a continuous component cooling water (CCW) supply until a leaking cooling line can be isolated. Because the tank is normally vented to the atmosphere, a radiation monitor in the component cooling system annunciates in the control room and closes a valve in the vent line in the unlikely event that the radiation level reaches a preset level above the normal background.

9.2.2.3 Component Description

Component Cooling Water Heat Exchangers

The two component cooling water (CCW) heat exchangers located on the upper level of the auxiliary building are of the shell and straight tube type. Service water (SW) circulates through the tubes while component cooling water (CCW) circulates through the shell side. Parameters are presented in Table 9.2-3.

Component Cooling Water Pumps

The two component cooling water (CCW) pumps which circulate component cooling water (CCW) through the component cooling loop are horizontal, centrifugal units. The pump casings are made from cast iron (ASTM 48) based on the corrosion-erosion resistance and the ability to obtain sound castings. The material thickness is indicated by high-quality casting practice and ability to withstand mechanical damage, and, as such, is substantially overdesigned from a stress-level standpoint. The design parameters are listed in Table 9.2-3.

Component Cooling Water Surge Tank

The component cooling water (CCW) surge tank, which accommodates changes in component cooling water (CCW) volume, is constructed of carbon steel. Parameters are presented in Table 9.2-3. Piping is provided for the addition of the chemical corrosion inhibitor to the component cooling loop.

Component Cooling Valves

The valves used in the component cooling water (CCW) system are constructed of carbon steel with bronze or stainless steel trim. Since the component cooling water (CCW) is not normally radioactive, special features to prevent leakage to the atmosphere are not provided.

Self-actuated spring-loaded relief valves are provided for lines and components that could be pressurized to their design pressure by improper operation or malfunction.

Component Cooling Piping

All component cooling loop piping is carbon steel with welded joints and connections, except at components which might need to be removed for maintenance.

9.2.2.4 System Evaluation

9.2.2.4.1 Availability and Reliability

9.2.2.4.1.1 Accessibility

For component cooling of the reactor coolant pump and the excess letdown heat exchanger inside the containment, most of the piping, valves, and instrumentation are located outside the concrete shields for the reactor vessel, steam generators, and reactor coolant pumps at an elevation above the water level in the bottom of the containment at postaccident conditions. The exceptions are the cooling lines for the reactor coolant pumps and reactor supports, which are not required to be operable following an accident. This location provides a measure of protection from postaccident dynamic conditions and flooding and also provides shielding which allows for maintenance and inspections to be performed during power operation.

Outside the containment, the component cooling pumps and heat exchangers, and associated valves, piping, and instrumentation can be maintained and inspected during power operation. Replacement of one pump or one heat exchanger may be performed while the second units are in service.

9.2.2.4.1.2 Seismic Design

The component cooling loop components are Seismic Category I and are designed to the codes given in Table 3.2-1. In addition, the components of the component cooling loop are not subjected to any high pressures (see Table 9.2-3) or stresses. Hence, a rupture or failure of the system is very unlikely.

9.2.2.4.1.3 Loss of Component Cooling Water System

Valves are provided for isolation of individual leaking components. Also, although the component cooling water (CCW) pumps and heat exchangers are redundant, they are connected by single pipe headers whose failure could disable the system. However, at the operating pressure and temperature of the system (100 psig, 200°F) a passive failure could probably result in a leak rate estimated to be no greater than 210 gpm. The normal volume of water in the surge tank (1000 gal) would provide the operators with about 5 min at a leak rate of 210 gpm to stop a leak from the system. It is improbable that the operator could act within this time period, and it is possible that the leak may be in an unisolable portion of the system. If a loss of the component cooling water (CCW) systems occurs during MODES 1 and 2, an operating procedure directs the operator to shut down the reactor and commence decay heat removal using the steam generators with natural circulation of the reactor coolant system. If component cooling water (CCW) cannot be readily restored, a plant cooldown would be commenced. For a cooldown with no component cooling water (CCW), the cooldown method and system described in *Reference 12* (with the exception of the component cooling water (CCW) and residual heat removal systems) would be available, and a method is available to achieve MODE 5 (Cold Shutdown) conditions independent of the component cooling water (CCW) and residual heat removal systems using the steam generators as described in *Reference 13.*

Loss of the component cooling water (CCW) system during postaccident recirculation operation was considered in the Provisional Operating License review of Ginna and it was concluded that the residual heat removal pumps could continue to operate to recirculate containment sump water with decay heat being removed by the containment fan coolers. However, because the component cooling water (CCW) system cools the bearings and lubricating oil coolers for the residual heat removal (and other Emergency Core Cooling System (ECCS)) pumps, these pumps would not be available to recirculate the sump water. Current criteria for piping system passive failures do not require the assumed passive failures of moderate energy systems (like the component cooling water (CCW)) under postaccident conditions, although system leaks are assumed (*Reference 1*) (see Section 5.4.5.3.5). Therefore, the component cooling water (CCW) system makeup capability should be capable to cope with normal system leakage in postaccident operation.

The effects of a loss of component cooling water (CCW) during a cooldown of the plant with the residual heat removal system operating have been considered. In this case, with the reactor vessel head installed, the reactor coolant system temperature would rise to greater than 200°F and decay heat could continue to be removed via the steam-generator atmospheric steam dump valves using natural circulation. Steam-generator feed would be accomplished by the preferred auxiliary feedwater system. The plant could remain in this condition while component cooling water (CCW) repairs were made. For normal decay heat removal when the reactor vessel head is removed, adequate cooling can be provided by keeping the core flooded (using various systems such as the residual heat removal and chemical and volume control systems) while repairs are made to the component cooling water (CCW) piping. The component cooling water (CCW) system is accessible for repairs and can be filled with water in less than 2 hours after the repairs are completed starting with a completely drained system.

9.2.2.4.1.4 Component Cooling Water Surge Tank

During normal and postaccident operation, thermal expansion and contraction of the component cooling water (CCW) system liquid is accommodated by the component cooling water (CCW) surge tank, and leakage into or out of the system can be detected by surge tank level changes. High and low surge tank levels are alarmed in the control room, and a radiation monitor and alarm alerts the control room operator to the leakage of radioactive fluid into the component cooling water (CCW) system from components which contain reactor coolant. The surge tank also maintains a positive suction head on the component cooling water (CCW) pumps during normal and postaccident operation. Makeup water to the component cooling water (CCW) system is normally supplied by the reactor makeup water system via a remotely operated valve in the auxiliary building. The makeup rate is sufficient to accommodate system leakage. The demineralized water system is also a makeup source utilizing manual valves. Installation of redundant water level sensors on the component cooling water (CCW) surge tank ensures early warning and detection of leaks in the component cooling water (CCW) system so that operator action can be taken to prevent damage to the reactor coolant pumps.

9.2.2.4.1.5 Safety-Related Functions

The safety-related functions of the component cooling water (CCW) system are to provide cooling for the residual heat removal heat exchangers and Emergency Core Cooling System

(ECCS) pumps. Other functions of the component cooling water (CCW) system include cooling to the reactor coolant pumps, reactor support cooling pads, excess letdown heat exhanger, and the nonregenerative heat exchanger.

On loss of component cooling water (CCW) flow, plant procedures require the operator to trip the reactor and then trip the reactor coolant pumps. Loss of component cooling water (CCW) flow to the excess letdown heat exchanger or reactor support cooling pads could cause a reactor shutdown, but does not require immediate operator action, and adequate protection is provided by plant procedures.

Regulatory Guide 1.97 recommends instrumentation for the component cooling water (CCW) flow to the engineered safety features system with a range of 0 to 110% of design flow. Although such instrumentation is not provided at Ginna Station, other instruments provide adequate information. Ginna Station has redundant component cooling water (CCW) pumps with pump status indication, as well as component cooling water (CCW) surge tank level indication in the control room. Also, alarms are provided for the following: low surge tank level, low system flow, low system pressure, and low component cooling water (CCW) flow from the residual heat removal, core spray, and safety injection pumps. Thus, substantial information exists to verify operability of the component cooling water (CCW) system.

The component cooling water (CCW) system is normally aligned with each supply line to the residual heat exchangers closed by a motor-operated valve that can be remote manually operated from the control room. This normal alignment is consistent with the cooling requirements during the injection phase of emergency core cooling. One of these valves is required to open upon transfer to the long-term recirculation phase following a loss-of-coolant accident.

9.2.2.4.1.6 Flow-Induced Vibration

To minimize the potential for flow-induced vibration in the component cooling water (CCW) heat exchangers and residual heat removal heat exchangers during normal cooldown and postaccident recirculation modes, analyses were performed (*References 5 through 8*) to determine the effects of reducing flow through the heat exchangers. The analyses supported a reduction in flow and as a result, since 1994, component cooling water (CCW) flow has been limited to approximately 2500 gpm through the shell side of each component cooling water (CCW) heat exchanger. To accomplish this, the component cooling water (CCW) system outlet valves from the residual heat removal heat exchangers (780A and 780B) were throttled and remain in a position of approximately 30 degrees. Analysis showed that throttling these valves would cause the least impact on system valves and would also reduce flow through the residual heat removal heat exchangers to approximately 1800 gpm thereby minimizing the potential for flow-induced vibration in these exchangers.

During normal power operation and the postaccident injection phase, the component cooling water (CCW) system inlet valves to the residual heat removal heat exchangers (MOV-738A and 738B) are in the closed position. Therefore, during these evolutions the component cooling water (CCW) system flow is much less than its rated capacity and flow-induced vibration is not a concern to system reliability.

These flow rate reductions were determined to result in a 6% reduction in heat removal capability of the residual heat removal and component cooling water (CCW) systems (as compared to the design flow rates listed in Tables 5.4-6, 6.3-5, and 9.2-3). The reduction in heat removal capability would not significantly affect cooldown operations. A normal plant cooldown with an 85°F lake temperature and the reduced component cooling water heat exchanger flow rates was evaluated as part of the plant uprate to 1775 MWt (*Reference 16*). The evaluation demonstrated that plant cooldown to Mode 5 conditions in less than 30 hours after a reactor shutdown was achievable with operation of only one CCW Pump and one RHR Pump.=

9.2.2.4.2 Leakage Provisions

9.2.2.4.2.1 Introduction

Water leakage from piping, valves, and equipment in the system inside the containment is not considered to be generally detrimental unless the leakage exceeds the makeup capability. With respect to water leakage from piping, valves, and equipment outside the containment, welded construction is used where possible to minimize the possibility of leakage. The component cooling water (CCW) could become contaminated with radioactive water due to one of the following:

a. A leak in any heat exchanger tube in the chemical and volume control, the sampling, or residual heat removal systems, or a leak in the cooling coil for the mechanical seal on a reactor coolant pump.

b. Absorption of radioactive products from the containment air during actual postaccident operations.

9.2.2.4.2.2 Leakage Detection

Reactor coolant leakage into the component cooling loop from components being cooled are detected by the leak detection system described in Section 5.2.5 for components within the containment. Such leaks are detected by a radiation monitor located in the component cooling system and also by an increase in level in the component cooling surge tank.

Leakage from the component cooling loop can be detected by a falling level in the component cooling surge tank. The leaking component can be ascertained by sequential isolation or inspection of equipment in the loop. If the leak is in the on-line component cooling water (CCW) heat exchanger, the standby exchanger would be put on stream and the leaking exchanger isolated and repaired. During MODES 1 and 2, the leaking exchanger could be left in service with leakage up to the capacity of the makeup line to the auxiliary building from the demineralized water system. Should a large tube-side to shell-side leak develop in a residual heat exchanger, the water level in the component cooling surge tank would rise, and the operator would be alerted by a high-water alarm. The atmospheric vent on the tank is automatically closed in the event of high radiation level in the component cooling water (CCW) system. If the leaking residual heat exchanger is not isolated from the component cooling loop before the inflow completely fills the surge tank, the relief valve on the surge tank lifts. The discharge of this relief valve is routed to the auxiliary building waste holdup tank.

Engineering analysis shows that the automatic closure of the component cooling water (CCW) surge tank vent upon detection of reactor coolant system inleakage by the radiation monitor will not overpressurize the system. In this case, the maximum system pressurization was calculated to be approximately 229 psig, which is well below the 500-psig hydrostatic test pressure limit of the component cooling water (CCW) pump seals, the most limiting system component. The pressurization is limited by maximum component cooling water (CCW) pump discharge pressure, maximum system deviation head, and highest-possible relief valve pressure setting.

The severance of a cooling line serving an individual reactor coolant pump cooler would result in substantial leakage of component cooling water (CCW). Several indications and alarms are available to alert the operator of this loss of component cooling water (CCW). The water storage in the surge tank after a low-level alarm, together with makeup flow, provides the operator with time to close the valves external to the containment to isolate the leak. Operator actions are dictated by the Ginna Emergency Procedures to prevent damage to the reactor coolant pumps.

9.2.2.4.2.3 Relief Valves

The relief valves on the component cooling water (CCW) lines downstream from each reactor coolant pump are designed with a capacity equal to the maximum rate at which reactor coolant can enter the component cooling loop from a severance type break of the reactor coolant pump thermal barrier cooling coil. Flow indication is available and isolation valves can be closed to prevent the continued inflow of reactor coolant into the component cooling water (CCW) system. The isolated portion of piping is designed to withstand full reactor coolant system pressure (2500 psig).

The relief valve on the component cooling surge tank is sized to relieve the maximum flow rate of water which enters the surge tank following a rupture of a reactor coolant pump thermal barrier cooling coil prior to the time it is isolated. However, a full break is not required to be considered with respect to causing a LOCA, since component cooling water (CCW) is a moderate energy piping system which only requires consideration of cracks and conservatism in the tube design will prevent tube collapse. Therefore, only cracks in accordance with *Reference 11* need to be postulated. The set pressure of the relief valve is such that none of the components in the component cooling water (CCW) system would be damaged due to the inflow of reactor coolant.

The relief valves on the cooling water lines for the sample, excess letdown, seal-water, nonregenerative, and residual heat exchangers are sized to relieve the volumetric expansion occurring if the exchanger shell side is isolated when cool, and high-temperature coolant flows through the tube side. The set pressure equals the design pressure of the shell side of the heat exchangers.

9.2.2.4.3 Incident Control

Since the component cooling water (CCW) system loop is used as an engineered safety feature, containment isolation valves are not automatically closed. That portion of the loop located outside the containment is not required to be a closed system. Each of the cooling

water supply lines to the reactor coolant pumps contains a check valve inside and a remote operated valve outside the containment wall. Each return line has a remote operated valve outside the containment wall. The cooling water supply line to the excess letdown heat exchanger contains a check valve (inside the containment wall), normally open supply and return manual isolation valves (located outside the containment wall) and a return line air operated globe valve (outside outside the containment wall) which are closed during MODES 1 and 2. Except for the normally closed makeup line and equipment vent and drain lines, there are no direct connections between the cooling water and other systems. The equipment vent and drain lines outside the containment have manual valves which are normally closed unless the equipment is being vented or drained for maintenance or repair operations.

Following a loss-of-coolant accident, one component cooling pump and one component cooling heat exchanger accommodate the heat removal loads. If either a component cooling pump or component cooling heat exchanger fails, the standby pump and heat exchanger provide 100% backup. Valves on the component cooling return lines from the safety injection, containment spray, and residual heat removal pumps are locked open. Each of the component cooling supply lines to the residual heat exchangers has a normally closed, remotely operated valve. If one of the valves fails to open at initiation of long-term recirculation, the valve which does open supplies a heat exchanger with sufficient cooling to remove the heat load.

If a break of a cooling line occurs inside the containment, adequate valving is available outside the containment on the component cooling supply and return lines to isolate the leak (see Drawing 33013-1246, Sheet 1). None of the components inside the containment require component cooling water (CCW) during recirculation. If the break occurs outside the containment, the leak could either be isolated by valving or the broken line could be repaired, depending on the position in the loop at which the break occurred.

Once the leak is isolated or the break has been repaired, makeup water is supplied from the reactor makeup water tank by either one of the reactor makeup water pumps or the monitor tank pump. If the loop drains completely before the leakage is stopped, it can be refilled by either a reactor makeup water pump or the monitor tank pump in less than 2 hours.

To comply with Appendix R requirements related to ensuring the cabability to achieve cold shutdown within 72 hours and to relieve pump casing brittle fracture concerns, in 1983 RG&E purchased a spare component cooling water (CCW) pump to be stored on site which could be manually placed in service, if needed. Modifications to the Appendix R program as accepted by the NRC (*Reference 9*) and an evaluation by RG&E addressing the brittle fracture concerns (*Reference 10*), later eliminated the commitment to maintain a spare pump.

In the review of SEP Topic III-4A, Tornado Missiles, it was concluded that a loss of the component cooling water (CCW) system due to tornado effects will not compromise safe shutdown capability, because alternative safe shutdown means are available which do not rely on the component cooling water (CCW) system.

9.2.2.4.4 Malfunction Analysis

A failure analysis of pumps, heat exchangers, and valves is presented in Table 9.2-4.

9.2.2.5 Instrumentation Requirements

The operation of the component cooling water (CCW) system is monitored with the following instrumentation:

A. Temperature detectors in the main inlet and outlet lines for the component cooling heat exchangers.

B. A pressure detector on the line between the component cooling pumps and the component cooling heat exchangers.

C. A temperature and flow indicator in the outlet line from the heat exchangers.

D. A radiation monitor on the main inlet line to the component cooling pumps.

E. Redundant water level instrumentation at the component cooling water (CCW) surge tank.

The following is a list of alarms that are monitored in the control room:

AA. Component cooling surge tank high level.

BB. Containment spray pump cooling water outlet low flow.

CC. Reactor coolant pumps component cooling water (CCW) return high temperature or low flow.

DD. Residual heat removal pump cooling water outlet low flow.

EE. Component cooling heat exchanger outlet high temperature.

FF. Component cooling pump discharge low pressure.

GG. Component cooling water from reactor support high temperature.

HH. Component cooling pump inlet header high temperature.

II. Component cooling loop low flow.

JJ. Component cooling service water low flow.

9.2.2.6 Minimum Operating Conditions

Minimum operating conditions for the component cooling water (CCW) system are shown in Table 9.2-5 and are part of the Technical Specifications.

9.2.2.7 Tests and Inspections

The active components of the component cooling water (CCW) system are in either continuous or intermittent use during MODES 1 and 2. System motor-operated valves are exercised per surveillance program requirements. Periodic visual inspections and preventative maintenance are conducted following normal industrial practice.

9.2.3 DEMINERALIZED WATER MAKEUP SYSTEM

The condensate demineralizer system which maintains the purity of the feedwater is described in Section 10.7.7.

The primary water treatment system or mobile demineralizer trucks provide demineralized water to the reactor makeup water tank, the component cooling water (CCW) surge tank, and the condensate storage tanks. In addition, they provide demineralized water for use throughout the plant. Drawings 33013-1907 and 33013-1908 show the primary water treatment system. Drawing 33013-1908, Sheet 1, shows the mobile demineralizer truck connections. The reactor makeup water tank provides demineralized water to the chemical and volume control system for primary system makeup as discussed in Section 9.3.4 and to the component cooling water (CCW) system. The condensate storage system is described in Section 9.2.4. The component cooling water (CCW) system is described in Section 9.2.2.

9.2.4 CONDENSATE STORAGE FACILITIES

The condensate and feedwater systems are described in Section 10.4. The condensate storage facilities are described in Section 10.7.4.

REFERENCES FOR SECTION 9.2

1. Nuclear Regulatory Commission, Branch Technical Position ASB 3-1, Appendix A to Appendix C, Criteria for Determination of Postulated Break and Leakage Locations in High and Moderate Energy Fluid Piping Systems Outside of Containment Structures, July 12, 1972.

2. Letter from D. M. Crutchfield, NRC, to L. D. White, RG&E, Subject: SEP Topic III-5.B - Pipe Break Outside Containment, dated June 24, 1985.

3. Letter from R. C. Mecredy, RG&E, to A. R. Johnson, NRC, Subject: Service Water System Operational Performance Inspection, dated September 1, 1992, with attached Summary Report, Long-Term Containment Response to LBLOCA With One Service Water Pump Operating.

4. Letter from D. M. Crutchfield, NRC, to J. E. Maier, RG&E, Subject: SEP Topic IX-3, Station Service and Cooling Water Systems, dated November 3, 1981.

5. Rochester Gas and Electric Corporation Safety Evaluation SEV-1011, Revision 1, Throttling of CCW to RHR Flow Control Valves 780A and 780B, dated March 2, 1994.

6. Rochester Gas and Electric Corporation Safety Evaluation NSL-0000-SE023, Shutdown Throttling of CCW to RHR Flow Control Valves 780A, 780B, dated March 12, 1993.

7. Rochester Gas and Electric Corporation Design Analysis DA-ME-93-157, Impact of CCW Flow Reduction on CCW and RHR Heat Exchanger Performance, dated December 3, 1993.

8. Rochester Gas and Electric Corporation Design Analysis DA-ME-93-0052, Component Cooling Water Heat Exchanger Flow Analysis for Potential Flow Induced Vibration (FIV), dated August 30, 1993.

9. Letter from J. A. Zwolinski, NRC, to R. W. Kober, RG&E, Subject: Exemptions to Section III.G of Appendix R, dated March 21, 1985.

10. SEV-1010, UFSAR Change on CCW Pump Material, dated December 16, 1993.

11. Rochester Gas and Electric Corporation Design Analysis ME-92-0008, NRC IEN 89-54 Evaluation, dated March 17, 1992.

12. Letter from D. M. Crutchfield, NRC, to J. E. Maier, RG&E, Subject: Ginna - SEP Topics V-10.B, RHR System Reliability, V-11.B, RHR Interlock Requirements, and VII-3, Systems Required for Safe Shutdown (Safe Shutdown Systems Report), dated May 13, 1981.

13. Letter from L. D. White, RG&E, to D. L. Ziemann, NRC, Subject: Fire Protection - Shutdown Analysis, dated December 28, 1979.

14. Letter from G. S. Vissing, NRC, to R. C. Mecredy, RG&E, Subject: Service Water System at R. E. Ginna Nuclear Power Plant (TAC No. M84947), dated January 29, 1999.

15. =Letter from M. Korsnick, Ginna, to Document Control Desk, NRC, "License Amendment Request Regarding Extended Power Uprate," (Letter # 1001353) dated July 7, 2005.=

16. =Westinghouse Calculation CN-SEE-04-84, "Ginna Uprate Cooldown Analysis," Revision 0.=

Table 9.2-1
LOADS SUPPLIED BY SERVICE WATER (SW) SYSTEM

Diesel-generator coolers (4) and expansion tank makeup (2)

Condensate pump motor coolers (3)

Heater drain pump motor coolers (2)

Instrument air compressors (3)

Generator exciter cooler (1)

Generator bus duct coolers (2)

Generator seal-oil coolers (2)

Main feed pump lube-oil coolers (2)

Electrohydraulic control oil coolers (2)

Turbine lube-oil coolers (2)

Vacuum priming pumps (2)

Fire service water booster pump supply (1)

Traveling screen flushing valves supply (4)

Seal-water to circulating water pumps (2)

Relay room air conditioning units (2)

Battery room air conditioning unit (1)

Containment air test aftercooler (1)

Air conditioning water chillers (2)

Containment recirculation fan coolers (4 units, 3 coils per unit) and fan motor coolers (4)

Reactor compartment coolers (2)

Component cooling water heat exchangers (2)

Spent fuel pool heat exchangers (2 normal, 1 standby)

Safety injection pump outboard thrust bearing housing oil coolers (3)

Residual heat removal pump room coolers (2)

Charging pump room coolers (2)

Containment penetration cooling

Administrative computer room air conditioner unit (1)

Telephone equipment room air conditioning unit (1)

Degasifier and instrumentation and control shop

Alternative supply to Preferred auxiliary feedwater system (AFW) pumps (3)

Normal supply to standby auxiliary feedwater system (SAFW) pumps (2)

Safety injection and containment spray pump area coolers (3)
(Service water (SW) lines to these were blanked closed in 1992. See Section 9.4.9.1)

Standby auxiliary feedwater pump (SAFW) area coolers (2)

Motor-driven auxiliary feedwater pump (MDAFW) oil coolers (2)

Turbine-driven auxiliary feedwater pump (TDAFW) oil cooler

Turbine-driven auxiliary feedwater pump (TDAFW) pump (outboard) thrust bearing

Motor-driven auxiliary feedwater pumps (MDAFW) outboard thrust bearing (2 pumps)

House heating boiler sample cooler

Component cooling water (CCW) area emergency shower and eyewash

Sample coolers (6)

Secondary cooling temperature control unit

Water treatment system source water

Table 9.2-2
MAJOR SERVICE WATER SYSTEM FLOWS

Service (Number)	Design Flow Each (gpm)[a]	Typical Flow at Power Two Pumps Total (gpm)[b]	Typical Flow at Power Three Pumps Total (gpm)[b]	Number of Components Assumed to Receive Service Water Flow During Injection Phase Post LOCA	Number of Components Assumed to Receive Service Water Flow During Recirculation Phase Post LOCA
Containment fan cooler units (4)[c] consisting of:					
Cooling coils (3 per unit)	915[d]	4,769	5,460	4 cooler units	4 cooler units
Fan motor cooler (1 per unit)	31	235	270	4 fan motor coolers	4 fan motor coolers
Subtotal	946	5,004[e]	5,730[e]	NA	NA
Component cooling water (2)[c]	5,070[f]	2,642[g]	4,200[g]	None	2
Reactor compartment coolers (2)	45	98	115	2	2
Diesel generators (2)[c]	320	751	865	2	2
Motor-driven auxiliary feedwater pumps (MDAFW) oil coolers (2)[c]	7	14	14	2	2
Turbine driven auxiliary feedwater pump (TDAFW) oil cooler (1)[c]	25	25	25	1	1
Main turbine lube oil coolers (2)	600	651	735	None	None
Penetration cooler (1)	20	34	40	1	1
Electrohydraulic control oil coolers (2)	20	39	45	None	None
Seal oil coolers (2) (air side/H^2 side)	100/70	259	290	None	None
Exciter (1)	90	308	350	None	None
Pump area coolers					
Safety injection and containment spray (3)	NA[h]	NA[h]	NA[h]	None	None
Residual heat removal (2)	12.5	33	40	2	2
Charging (2)	9	32	40	2	2

Service (Number)	Design Flow Each (gpm)[a]	Typical Flow at Power Two Pumps Total (gpm)[b]	Typical Flow at Power Three Pumps Total (gpm)[b]	Number of Components Assumed to Receive Service Water Flow During Injection Phase Post LOCA	Number of Components Assumed to Receive Service Water Flow During Recirculation Phase Post LOCA
Safety injection pump bearing housing oil cooling (3)[c]	3	9	9	3	3
Standby auxiliary feedwater(SAFW):					
Pump supplies (2)[c]	400[i]	NA	NA	None	None
Area Coolers (2)[c]	25[i]	NA	NA	None	None
Air compressors (3)	12[j]	36	36	None	None
Air conditioning	525	270	310	None	None
Sample coolers and chillers (4)	15	41	50	None	None
Bus duct coolers (2)	70	162	180	None	None
Main feedwater pump lube oil coolers (2)	35	82	95	None	None
Water treatment system source water	600	200	200	None	None
Spent fuel pool heat exchanger A	700	474[k]	530[k]	None	None
Spent fuel pool heat exchanger B[c]	1,600	661[k]	840[k]	None	1
Screen wash (4)	320[l]	505[m]	570[m]	None	None
TOTAL	NA	12,328	15,305	NA	NA
Number of pumps required (4)	NA	2[n]	3[n]	1	2
Service water pump flow (gpm) per pump	5,300	6,164[o]	5,102[op] 4,872[q]		

a. These values represent flows utilized for design purposes and during normal operation (MODES 1 and 2) and testing are applied to the critical loads as alert values.

b. Flows represent typical values determined by hydraulic analysis of the service water (SW) system using a computerized model, which represents the system configuration and which has been baselined against system testing and operations data.

c. These loads have been classified as critical loads as they have either a postaccident function or a function important to safety.

d. Minimum required flowrate for 80°F service water (SW) system temperature and 33,000 cfm air flow is presented. Requirements to ensure containment integrity are based on heat removal rate in Btu/hr in the accident analysis and are dependent on service water flow and temperature and fan cooler air flow rate. See Section 6.2.2.1 and 9.2.1.4.

e. During normal operation (MODES 1 and 2) the actual flowrate to the containment recirculating fan coolers may be throttled based on the setting of the common outlet control valve.

f. Value is based on sizing of the heat exchanger with system valves full open for the purpose of satisfying the maximum required decay heat removal for the normal plant cooldown evol tion.

g. During normal operation (MODES 1 and 2), flow to the component cooling water heat exchanger is throttled based on service water temperature and number of service water pumps op ating.

h. The service water (SW) piping to these pump area coolers is blanked closed. These coolers are not required for operation of the pumps. See Section 9.4.9.1.

i. The service water (SW) system provides flow (manually initiated) to the standby auxiliary feedwater pumps (SAFW) as a backup to the Preferred auxiliary feedwater system (AFW) on for postulated special events when all auxiliary feedwater pumps are unavailable.

j. Instrument air compressor C was replaced in 1995. The service water (SW) design flow to this new unit is 20 gpm.

k. During normal operation (MODES 1 and 2), flow to the spent fuel pool heat exchanger is throttled based on lake temperature and spent fuel pool load.

l. The screen wash design flow was based on 60 psig at the nozzles. The actual pressure is approximately 50 psig.

m. Two traveling water screen sprays are normally in operation as the screens operate by a timer cycle.

n. The number of service water (SW) pumps in operation while the plant is at power is dependent on lake temperature and pump header pressure.

o. This flow exceeds "rated" service water (SW) pump capacity but is within the maximum runout flow of 7600 gpm which is a net positive suction head (NPSH) limit.

p. Reflects the flow for the service water (SW) pump that is operating on the single pump service water (SW) header during three-pump normal service water (SW) operation.

q. Reflects the flow for each of the two service water (SW) pumps that are operating on the two-pump service water (SW) header during three-pump normal service operation.

Table 9.2-3
COMPONENT COOLING LOOP COMPONENT DATA

Component cooling water pumps	
Quantity	Two
Type	Horizontal centrifugal
Rated capacity, gpm	2980
Rated head, ft H_20	165
Normal cooldown capacity (throttled), gpm[a]	2400
Head at normal cooldown capacity, ft H_2O	180
Capacity during normal power operation, gpm[b]	1300-1400
Motor horsepower, hp	150
Casing material	Cast iron
Design pressure, psig	150
Design temperature, °F	200
Component cooling water heat exchangers	
Quantity	Two
Type	Shell and straight tube
Heat transferred, Btu/hr	[c]25.15×10^6
Shell side (component cooling water)	
Inlet temperature, °F	117
Outlet temperature, °F	100
Flow rate, lb/hr	[c]1.475×10^6(approx 2970gpm)
Design temperature, °F	200
Design pressure, psig	150

Tube side (service water)	
Inlet temperature, °F	80[d]
Outlet temperature, °F	90
Flow rate, lb/hr	2.53×10^6
Design pressure, psig	150
Design temperature, °F	200
Tube material	Admiralty
Shell material[e]	Carbon steel

Component cooling water surge tank

Volume, gal	2000
Volume above normal operating water level, gal	1000
Design pressure, psig	100
Design temperature, °F	200
Construction material	Carbon steel
Relief valve setpoint, psig	100

a. During plant cooldown or postaccident recirculation with residual heat removal heat exchangers in service.

b. Residual heat removal heat exchangers not in service.

c. To minimize the potential for flow-induced vibration in the component cooling water heat exchangers, as of 1994 component cooling water flow has been limited to approximately 2500 gpm through the shell side of each exchanger. See Section 9.2.2.4.1.6.

d. Maximum possible inlet temperature is 85°F. Impact of 85°F inlet temperature on CCW Heat Exchanger performance is discussed in Section 9.2.2.2.

e. In an effort to minimize corrosion on the service water side of the "B" component cooling water heat exchanger, the outlet channel and inlet/outlet tubesheets, which are carbon steel, have been coated with an epoxy.

Table 9.2-4
FAILURE ANALYSIS OF PUMPS, HEAT EXCHANGERS, AND VALVES

Components	Malfunction	Comments and Consequences
Component cooling water pumps	Rupture of a pump casing	The casing and shell are designed for 150 psi and 200°F, which exceed maximum operating conditions. Furthermore, the system can withstand even higher conditions without failure. Rupture due to missiles is not considered credible; however, each unit is isolable and second unit can carry total pumping load.
	Pump fails to start	Additional pump is available. Only one is required to perform the required cooling functions.
	Manual valve on a pump suction line closed	This is prevented by prestartup and operational checks. Further, during normal operation (MODES 1 and 2), each pump is operated on a periodic basis, which would show if a valve is closed.
Component cooling water	Valve on discharge line sticks closed	The valve is shown to be open during periodic operation of the pumps during normal operation (MODES 1 and 2).
Check valve at inlet penetrations	Sticks closed	For flow loops required for normal operation (MODES 1 and 2), there is flow through this line at all times. Hence, the valve is normally open and that it sticks closed at the time of accident is considered incredible.
Component cooling heat exchanger	Tube or shell rupture	Rupture is considered improbable because of the low operating pressure. Each unit is isolable. Second unit can carry total heat load for normal operation (MODES 1 and 2).
Demineralized water makeup line check valve	Sticks open or manual valve is open	The check valve is backed up by the manually operated valve. Manual valve is normally closed.
Component cooling heat exchanger vent or drain valve	Left open	This is prevented by prestartup and operational checks. On the operating unit such a situation is readily assessed by makeup requirements to system. On the second unit such a situation is ascertained during periodic testing.

Table 9.2-5
MINIMUM ALLOWED COMPONENTS FOR THE COMPONENT COOLING WATER (CCW) SYSTEM

Component	Number Installed	Minimum to[a] be Operative
Component cooling pumps	2	2
Component cooling heat exchangers	2	2
Residual heat removal heat exchangers	2	2
Service water pumps	4	2

a. As defined in the Ginna Station Technical Specifications, certain components may be out of service for specified time durations without requiring plant shutdown.

9.3 PROCESS AUXILIARIES

9.3.1 INSTRUMENT AND SERVICE AIR SYSTEMS

9.3.1.1 System Description

The instrument air system supplies clean, dry air for valve operators, and piping penetration pressurization. The service air system supplies air for maintenance and service use and the backup eductor for vapor extraction of the turbine-generator bearing drains. A backup source of air supply to the instrument air header is from the service air system. The flow diagram of the service air systems is shown in Drawing 33013-1886, Sheets 1 and 2.

The instrument air system produces 120 to 125 psig dry, filtered air used chiefly as the motive power for valve actuation. The system consists of three air compressors with an associated aftercooler and air reservoir for each compressor. Air from the receivers is supplied to the instrument air header through filters and an air dryer. The instrument air header delivers air to the various valve actuators, piping penetration pressurization system, and containment air and proof test system. The instrument air compressors, receivers, filters, and dryers are shown in Drawing 33013-1900, Sheets 1 and 2.

The service air system produces 115 to 125 psig dry, filtered air used in the maintenance air connections throughout the station, for fire water storage tank pressurization, and the turbine lube-oil system. The system consists of one air compressor with an integral aftercooler and associated air receivers. A cross-tie between service air and instrument air allows the service air system to supply the instrument air header if instrument air pressure drops below 90 psig. The cross-tie occurs prior to the instrument air filters. Therefore, air being supplied to the instrument air header will always pass through the filters and dryer. A cross-connect between the service air system and the instrument air system allows both systems to be supplied by a single rotary screw air compressor. A pressure regulator valve will stop air flow to the service air system if pressure on the service air side drops below 100 psig. Administratively, the instrument air system and service air system are cross-connected only when one of the rotary screw air compressors is in operation.

The instrument and service air compressors, aftercoolers, air receivers, and filters are located in the turbine building basement (253-ft level).

All controls and instrumentation that are required for safe operation and shutdown of the plant are electrical. Instrument air is used chiefly as the motive power for valve actuation. Air supply failure does not affect the safe operation of the plant; it affects only the means of positioning air controlled equipment. All air-operated containment isolation valves are listed in Tables 6.2-15 and 6.2-16. Table 6.2-16 lists the effects of loss of air supply on air-operated valves containment isolation valves. The effects of loss of air to these valves were considered in the safety analysis of all systems in the plant.

Instrument air distribution is shown in Drawings 33013-1887 through 33013-1899. Drawings 33013-1887 and 33013-1888 shows instrument air in the containment building. Drawings 33013-1889 through 33013-1892 shows instrument air in the auxiliary building. Drawing 33013-1893 shows instrument air in the intermediate building. Drawing 33013-1894 and

33013-1895 shows instrument air in the turbine building. Drawing 33013-1896 shows instrument air in the turbine building and screen house. Drawing 33013-1897, Sheets 1 and 2 shows instrument air in the all-volatile-treatment (condensate demineralizer) building. Drawings 33013-1898 and 33013-1899 shows instrument air in the service building.

The instrument air system, although supplying valves in safety-related systems, is not designed as a safety-related system. All safety-related systems using instrument air are designed such that upon loss of air pressure each component will fail in a position of greater safety.

9.3.1.2 Component Description

9.3.1.2.1 Compressors

The instrument air and service air compressors are comprised of a combination of two types of equipment; two two stage rotary screw type compressors and two vertical, canned, piston type compressors. All air compressors utilize oil-free construction to minimize the possibility of introducing oil into the instrument air system. The piston type instrument air compressors include an attached aftercooler. The rotary screw air compressors includes integral intercooler and aftercoolers. The compressor air receivers are located adjacent to the compressors.

The two rotary screw air compressors are controlled locally by microprocessors. There is also a start-stop control switch located on the back of the main control board. The rotary screw compressors load or unload based on system pressure.

The two piston type compressors have local control capabilities for constant, off, and automatic operation and a START-STOP control switch located on the back of the main control board. Normally, compressor operation is controlled by the local selector switches. When a compressor is placed in the constant operation configuration, the associated compressor will start and run continuously. In this mode of operation, the associated compressor is loaded or unloaded based upon system pressure.

The two piston type instrument air compressors, when in the automatic configuration, will start and run continuously when the instrument air header pressure drops to 110 psig.

9.3.1.2.2 Aftercoolers

The instrument air aftercoolers used with the piston type compressors provide cooling of the compressed air. The aftercoolers are counterflow shell and tube type heat exchangers. A solenoid-operated service water inlet isolation valve opens whenever the compressor is running. Service water flow rate is throttled by the temperature control valve in the flow path between the aftercooler and compressor. A moisture separator is located at the air outlet of the aftercooler. Any condensation resulting during cooling is removed by the moisture separator and drained to the waste system.

The two stage rotary screw instrument air compressor utilizes an intercooler following the first stage of compression and an aftercooler following the second stage of compression.

Both heat exchangers utilize counter flow shell and tube heat exchangers. A moisture trap is located on the outlet of both heat exchangers to remove condensation to the waste system.

The two stage rotary screw service air compressor is air cooled. The integral intercooler and aftercooler are designed to achieve a 20°F aftercooler approach temperature. A moisture trap is located on the outlet of both coolers to remove condensation to the waste system.

9.3.1.2.3 Air Receivers

The air receivers provide a storage volume of compressed air. The service and instrument air receivers are located adjacent to the compressor. The air receiver is provided with a safety valve, moisture drain trap, and pressure indications. The safety valves on the service and instrument air receivers are set for 135 psig.

The three instrument air receivers supply a common air header to the filters and air dryers. Also connected to this common header ahead of the filters and dryers is the service air cross-tie. A pressure regulating valve in this line will automatically supply the instrument air header from service air if the instrument air pressure drops below 90 psig.

9.3.1.2.4 Filters and Dryers

Two heaterless air dryers in the instrument air header reduce the dewpoint of the air to -70°F at atmospheric pressure. A prefilter before each drying unit removes entrained moisture and oil to prevent fouling of the dehydration towers. An automatic drain trap directs any moisture or oil collected to the waste system. Each dryer unit contains two desiccant-filled absorption towers. An automatic timer controls the air flow such that one tower per unit is in the drying stage while the other is being regenerated. Regeneration is accomplished by passing dry air through the regenerating tower and venting the moisture-laden air. Dry air from each dryer is passed through an afterfilter to remove any dessicant dust which may be present in the air. To eliminate problems due to corrosion particles in the instrument air system, all piping and valves downstream of the air dryers are brass or copper alloy. The two stage rotary screw service air compressor utilizes a similar heaterless air dryer.

The two stage rotary screw instrument air compressor utilizes absorption/heat of compression type dryer to remove any moisture from the compressed air. A rotor, made of material designed to absorb water, rotates slowly and is passed by two flows of air. A flow of wet compressed air to be dryed passes through three quarters of the rotor. A flow of hot compressed air is passed through one quarter of the rotor to regenerate the drying material after moisture is absorbed from the wet compressed air. The dewpoint of air discharged to the remainder of the system will be -22°F at a temperature and pressure of 68°F and 100 psig, respectively. This drying process neither utilizes nor produces any type of particulate, therefore no downstream filtration is required.

9.3.2 SAMPLING SYSTEMS

9.3.2.1 Nuclear Sampling System

9.3.2.1.1 Design Bases

9.3.2.1.1.1 Functional Requirements

The nuclear sampling system provides representative primary coolant samples for laboratory analysis during MODES 1 and 2. Typical information obtained from the analyses includes reactor coolant boron and chloride concentrations; fission product radioactivity level; corrosion product concentration and chemical additive concentrations; and oxygen, hydrogen, and fission gas content. The system has no active emergency function, but it interfaces with the postaccident sampling system (see Section 9.3.2.3).

The system is capable of obtaining reactor coolant samples during reactor operation and during cooldown when the system pressure is low and the residual heat removal loop is in operation. Access is not required to the containment for the collection of samples.

Equipment for sampling secondary and nonradioactive fluids is separated from the equipment provided for reactor coolant samples (Section 9.3.2.2). Leakage and drainage resulting from the sampling operations are collected and drained to tanks located in the waste disposal system.

Two types of samples are obtained by the system: high temperature-high pressure reactor coolant system and steam generator blowdown samples which originate inside the reactor containment, and low temperature-low pressure samples from the chemical and volume control and auxiliary coolant systems.

High Pressure-High Temperature Samples

A sample connection is provided from each of the following:

a. The pressurizer steam space.
b. The pressurizer liquid space.
c. Reactor coolant system hot legs A and B.
d. The steam generator blowdown from each steam generator.

Low Pressure-Low Temperature Samples

A sample connection is provided from each of the following:

a. The chemical and volume control system mixed-bed demineralizer inlet header.
b. The chemical and volume control system mixed-bed demineralizer outlet header.
c. The residual heat removal loop, just downstream of the heat exchangers.
d. The volume control tank gas space.

The high pressure-high temperature samples and the residual heat removal loop samples leaving the sample heat exchangers are held to a maximum temperature of 127°F to minimize the generation of radioactive aerosols.

All components, piping, and valves of the nuclear sampling system are designed to the applicable codes listed in Table 9.3-1 and in Section 3.2.

9.3.2.1.1.2 Operational Requirements

The nuclear sampling system is designed to be operated manually, and on an intermittent basis under conditions ranging from full power operation to MODE 5 (Cold Shutdown). In the design of sampling system piping five design requirements were imposed:

a. The piping is routed such that representative samples of the primary system can be obtained.

b. The piping internal diameter is sized such that the quantity of liquid that must be purged in order to obtain a representative sample is minimized.

c. The piping internal diameter is sized such that sample fluid velocities are high enough to maintain suspended solids in solution.

d. Flow through the system is limited during normal and accident conditions to prevent the release of fission products beyond the limits of 10 CFR 20. During postaccident operation, the postaccident sampling system may be used for highly radioactive material sampling and analysis (see Section 9.3.2.3).

e. Piping runs contain sufficient delay in order to minimize radiation exposure of the sample system operator (N-16 Gamma).

9.3.2.1.2 System Design and Operation

9.3.2.1.2.1 Sampling System

The nuclear sampling system, shown in Drawing 33013-1278, Sheets 1 and 2, provides the representative samples for laboratory analysis. Analysis results provide guidance in the operation of the reactor coolant and chemical and volume control systems. Analyses show both chemical and radiochemical conditions.

Typical information obtained includes reactor coolant boron, chloride, and fluoride concentrations, fission product radioactivity level, hydrogen, oxygen, and fission gas content, corrosion product concentration, and chemical additive concentration.

The information is used in regulating boron concentration adjustments, evaluating fuel element integrity and mixed-bed demineralizer performance, and regulating additions of corrosion controlling chemicals to the systems. The sampling system is designed to be operated manually, on an intermittent basis. Samples can be withdrawn under conditions ranging from full power to MODE 5 (Cold Shutdown).

Reactor coolant liquid and steam lines, which are normally inaccessible or which require frequent sampling, are sampled by means of permanently installed tubing leading to the sampling room.

Sampling system equipment is located inside the intermediate building with most of it in the sampling room. The delay coil and sample lines with remotely operated valves are located inside the reactor containment.

9.3.2.1.2.2 Reactor Coolant Samples

Reactor coolant liquid from both hot legs, pressurizer liquid, and pressurizer steam samples originating inside the reactor containment flow through separate sample lines to the sampling room. Each of these connections to the reactor coolant system has a remote operated isolation valve located close to the sample source. The samples pass through the reactor containment, to the intermediate building, and into the sampling room, where they are cooled (pressurizer steam samples condensed and cooled) in the sample heat exchangers. The sample stream pressure is reduced by a manual throttling valve located downstream of each sample pressure vessel. The sample stream is purged to the volume control tank in the chemical and volume control system until sufficient purge volume has passed to permit collection of a representative sample. After sufficient purging, the sample pressure vessel is isolated and then disconnected for laboratory analysis of the contents.

Alternately, liquid samples may be collected by bypassing the sample pressure vessels. After sufficient purge volume has passed to permit collection of a representative sample, a portion of the sample flow is diverted to the sample sink where the sample is collected.

The reactor coolant sample originating from the residual heat removal loop of the auxiliary coolant system has a remote operated, normally closed isolation valve located close to the sample source. The sample line from this source is connected into the sample line coming from the hot leg at a point ahead of the sample heat exchanger. Samples from this source can be collected either in the sample heat exchanger or at the sample sink, as with hot-leg samples.

9.3.2.1.2.3 Chemical and Volume Control System Samples

Liquid samples originating at the chemical and volume control system letdown line at demineralizer inlet and outlet pass directly through the purge line to the volume control tank. Samples are obtained by diverting a portion of the flow to the sample sink. If the pressure is low in the letdown line, the purge flow is directed to the chemical drain tank. The sample line from the gas space of the volume control tank delivers gas samples to the volume control tank sample pressure vessel in the sampling room. Purge flow for these samples is discharged to the vent header in the waste disposal system.

9.3.2.1.2.4 Steam Generator Liquid Samples

Samples of the steam generator liquid are obtained from the blowdown lines (see Drawing 33013-1278, Sheets 1 and 2). These sample lines are routed separately from each steam generator into the sample room where the liquid is cooled and the pressure reduced. Each individual sample is then split into two routes: one goes to the sample sink to provide samples for chemical analysis; in case of a primary to secondary steam generator leak, the second goes to a radiation monitor and then to drain. This second line handles a continuous flow for a constant reading of conductivity and a constant monitoring for radiation. These lines are missile

protected within the containment and are equipped with an automatic isolation valve and manual isolation valve in each line immediately outside the containment. The automatic isolation valve is closed upon receipt of a signal from the blowdown sample radiation monitor or the containment isolation system.

9.3.2.1.2.5 Sample Sink

The sample sink, which is contained in the laboratory bench as a part of the sampling hood, contains a drain line to the waste disposal system. A sample hood is provided around the valves at the containment penetration area, which directs airborne activity that may result from valve leakage to the intermediate building ventilation system.

9.3.2.1.2.6 Instrumentation

Local instrumentation is provided to permit manual control of sampling operations and to ensure that the samples are at suitable temperatures and pressures before diverting flow to the sample sink.

9.3.2.1.2.7 Steam Generator Blowdown

See Section 9.3.2.2.1 for a discussion of steam generator blowdown sampling for secondary side chemistry control.

9.3.2.1.3 Component Description

Design parameters of the nuclear sampling system components are listed in Table 9.3-2.

9.3.2.1.3.1 Sample Heat Exchangers

Five sample heat exchangers reduce the temperature of samples from pressurizer steam space, pressurizer liquid space, the hot legs, and each steam generator to 127°F or less before samples reach the sample vessels and sample sink. The tube side of the heat exchangers is austenitic stainless steel, the shell side is carbon steel.

The inlet and outlet tube sides have socket-weld joints for connections to the high-pressure sample lines. Connections to the component cooling water lines are socket-weld joints. The samples flow at 0.42 gpm through the tube side and component cooling water from the auxiliary coolant system circulates through the shell side.

9.3.2.1.3.2 Delay Coil

The hot-leg sample lines contain a delay coil, consisting of coiled tubing, which has sufficient length to provide at least a 40-sec sample transit time within the containment and an additional 20-sec transit time from the containment to the sampling hood. This allows for decay of shortlived isotopes to a level that permits normal access to the sampling room.

9.3.2.1.3.3 Sample Pressure Vessels

The pressurizer sample trains, the residual heat removal loop sample train, and the volume control tank gas space sample train each contain sample pressure vessels which are used to obtain liquid or gas samples. The hot-leg and the residual heat removal loop sample lines

have a single sample pressure vessel in common. Integral isolation valves are furnished with the vessel and quick-disconnect coupling valves containing poppet-type check valves, are connected to nipples extending from the valves on each end. The vessels, valves, and couplings are austenitic stainless steel.

9.3.2.1.3.4 Sample Sink

The sample sink is located in a hooded enclosure which is equipped with an exhaust ventilator. The work area around the sink and the enclosure is large enough for sample collection and storage for radiation monitoring equipment. The sink perimeter has a raised edge to contain any spilled liquid.

The enclosure is penetrated by sample lines from the reactor plant, a demineralized water line, and possibly steam system lines, all of which discharge into the sink. The sink and work area are stainless steel.

9.3.2.1.3.5 Piping and Fittings

All liquid and gas sample lines are austenitic stainless steel tubing and are designed for high pressure service. With the exception of the sample vessel quick-disconnect couplings and compression fittings at the sample sink, socket-welded joints are used throughout the sampling system. Lines are so located as to protect them from accidental damage during routine operation and maintenance.

9.3.2.1.3.6 Instrumentation

A temperature detector is located in the sample line downstream of each of the sample heat exchangers to provide the sample system operator with local temperature information. A pressure indicator is located in the sample line downstream of each sample pressure vessel. A flow meter is provided in the purge line to the volume control tank for use when purging sample lines.

9.3.2.1.3.7 Valves

Remotely operated stop valves are used to isolate all sample points and to route sample fluid flow inside the reactor containment. Manual stop valves are provided for component isolation and flow path control at all normally accessible sampling system locations. Manual throttle valves are provided to adjust the sample flow rate as indicated in Drawing 33013-1278, Sheets 1 and 2.

Check valves prevent gross reverse flow of gas from the volume control tank into the sample sink. There is a check valve in the sample line from the residual heat removal loop to prevent overpressurization of the residual heat removal system due to backflow from the reactor coolant system.

All valves in the system are constructed of austenitic stainless steel or equivalent corrosion resistant material.

Each sample line coming from the containment and the sample line from the residual heat removal loop contain an air-operated valve operated from outside the sampling room. The valves fail closed on loss of air.

Each sample line penetrating containment contains an air-operated globe valve used for containment isolation. These valves are operated from the main control room or local operating station outside the sample room and are closed automatically on a containment isolation signal. They fail closed on loss of air to the valve. To resolve concerns identified in Generic Letter (GL) 96-06 (Section 6.5.1.3), bypass lines with check valves were installed in 1997 inside containment around the air-operated sample line valves at penetrations 205, 206a and 207a.

9.3.2.1.4 System Evaluation

9.3.2.1.4.1 Availability and Reliability

Neither automatic nor operator action is required of the sampling system during an emergency or to prevent an emergency condition. The system is therefore designed in accordance with standard practices of the chemical processing industry.

9.3.2.1.4.2 Leakage Provisions

Leakage of radioactive reactor coolant from the system within the containment evaporates to the containment atmosphere and is removed by the cooling coils of the recirculation air heating and cooling system. Leakage of radioactive material from the most likely places outside the containment is collected by placing the entire sampling station under a hood provided with an offgas vent to waste gas processing. Liquid leakage from the valves in the hood is drained to the chemical drain tank.

9.3.2.1.4.3 Malfunction Analysis

To evaluate system safety, the failures or malfunctions were assumed concurrent with a loss-of-coolant accident, and the consequences analyzed. The results are presented in Table 9.3-3. From this evaluation it is concluded that proper consideration has been given to station safety in the design of the system.

9.3.2.1.5 Minimum Operating Conditions

All radioactive wastes are sampled and evaluated prior to release.

9.3.2.1.6 Tests and Inspections

The frequency and description of sample analyses are included in the Technical Specifications and the Technical Requirements Manual (TRM).

9.3.2.2 Nonnuclear Sampling System

The secondary sampling system is provided with a number of sampling points. All sample points are provided with manual sampling capability. Inline analyzers are provided for selected parameters to allow continuous information useful in evaluating secondary condi-

tions and in developing corrective actions when required. Drawing 33013-2711, Sheets 1 through 4 shows the nonnuclear sampling systems.

9.3.2.2.1 Steam Generator Blowdown Sampling

Steam Generator blowdown analysis provides the closest approximation of the chemistry which exists inside the steam generator. Steam generator blowdown water samples provide early indication of impurity ingress to the secondary system because of the concentrating effect of boiling. Parameters monitored continuously are:

1. pH.
2. Conductivity.
3. Cation conductivity.
4. Chloride.
5. Sulfate.
6. Sodium.

The sampling system conditions samples from each steam generator blowdown header and provides the conditioned samples to inline analyzers and to a manual sample point.

9.3.2.2.2 Hotwell Sampling

Two hotwell sample pumps allow sampling of the individual hotwell sections. Each hotwell sample can be analyzed for sodium and cation conductivity. Condenser leaks of approximately 0.05 gpm can be detected and isolated to a specific waterbox with the online sodium analyzers.

9.3.2.2.3 Condensate Sampling

A sample connection on the condensate pump outlet header feeds inline pH, cation conductivity, ion chromatograph, and dissolved oxygen analyzers at the secondary sample sink.

9.3.2.2.4 Feedwater Sampling

A feedwater sample taken from a point between the high pressure feedwater heaters outlet and the main feedwater regulating valve (MFRV) feeds inline pH, conductivity, cation conductivity, dissolved oxygen, corrosion products, ion chromatograph, and hydrazine analyzers at the secondary sample sink.

9.3.2.2.5 Main Steam Sampling

A sample connection on each main steam line feeds an inline cation conductivity analyzer at the secondary sample sink.

9.3.2.2.6 Heater Drain Tank Sampling

A sample connection on the heater drain tank discharge line feeds an inline cation conductivity, and corrosion products analyzer at the secondary sample sink.

9.3.2.2.7 Sampling Cooling

Cooling for the samples is accomplished by a service water primary cooling header with primary heat exchangers, along with secondary cooling by a closed cooling water system containing a temperature control unit with secondary heat exchangers. The samples that require both primary and secondary cooling are:

1. Feedwater to steam generator.
2. Steam generator blowdown.
3. Main steam samples.
4. Heater drain pump discharge.

The samples that require only secondary cooling are:

1. Condenser hotwell sample pump discharge.
2. Condensate pump discharge.

9.3.2.3 Postaccident Sampling System

9.3.2.3.1 Design Bases

The postaccident sampling system is designed to meet the postaccident sampling requirements of NUREG 0578 and NUREG 0737, Item II.B.3, and to meet the containment sump sampling and pH, and oxygen analysis requirements of Regulatory Guide 1.97, Revision 2.

In January 2002, the NRC staff issued Amendment No. 81 to the Ginna Station Technical Specifications (*Reference 4*). This amendment eliminated the Technical Specifications requirement for having and maintaining a postaccident sampling system. However, as a condition of this amendment to the Technical Specifications, three regulatory commitments were made. Initially, it is not intended to physically eliminate or modify the portaccident sampling system. The commitments will continue to be satisfied by maintaining and using the appropriate portions of the PASS. For future reference, the regulatory commitments are effective with the implementation of the license amendment and are as follows:

1. Maintain contingency plans for obtaining and analyzing highly radioactive samples of reactor coolant, containment sump, and containment atmosphere. The contingency plans are contained in plant procedures.
2. Maintain a capability for classifying fuel damage events for core damage levels approximating radioactivity levels of 300 μCi/gm dose equivalent iodent. This capability is described in plant procedures.
3. Maintain the capability to monitor radioactive iodines that have been released to offsite environs. This capability is described in plant procedures.

The postaccident sampling system is designed to allow the station to obtain and analyze reactor coolant, containment air, and containment sump samples within 3 hours after the decision is made to sample. The postaccident sampling system also permits routine sampling of these process streams during MODES 1 and 2. In-line chemical instrumentation is provided in a

liquid and gas sample panel which remotely determines important chemical parameters of the reactor coolant, containment air, and containment sump A. In addition, the liquid and gas sample panel enables acquisition of both diluted and undiluted grab samples of the reactor coolant and containment air for isotopic analysis in the counting lab. Radiation exposure during postaccident sampling is minimized by operating the postaccident sampling system liquid and gas sample panel remotely from an electric control panel and instrument panel located in the hot shop.

The postaccident sampling system is nonseismic except for the component cooling water and volume control tank purge line tie-ins, which are Seismic Category I. The supports of the system components are designed to ensure their structural integrity and the integrity of the interfacing Seismic Category I structures in the event of a seismic occurrence.

9.3.2.3.2 System Description

The postaccident sampling system shown in Drawing 33013-1279 consists of the following components:

A. One liquid and gas sample panel.

B. One electrical control panel and instrumentation panel.

C. Four postaccident sampling system coolers.

D. One postaccident sampling system waste tank.

E. One postaccident sampling system tank transfer pump.

F. One postaccident sampling system waste tank evacuating compressor.

G. One containment sump A sample pump.

H. Seven gas bottles.

I. Piping, valves, and other instrumentation.

The shielded liquid and gas sample panel located at elevation 235 ft in the south section of the intermediate building provides reactor coolant, containment sump, and containment atmosphere sampling capability. Control and monitoring of the liquid and gas sample panel is accomplished remotely by the electrical control panel and instrument panel located in the hot shop at elevation 253 ft approximately 30 ft away from the liquid and gas sample panel. Analytical laboratories are available onsite in the service building at elevation 271 ft and in the ground floor of the Training building. Grab samples of the containment sump fluid and reactor coolant can be collected at the liquid and gas sample panel, transported in a lead-shielded container to the next elevation and passed through a "passbox" to the radiochem lab for analysis. Containment air samples are also collected at the liquid and gas sample panel and transported manually to the "passbox" for isotopic analysis in the radiochem lab. Containment hydrogen monitoring and radiation monitoring of containment air are described in Sections 6.2.5.1 and 6.2.1.5.3, respectively.

9.3.2.3.3 Component Description and Operation

9.3.2.3.3.1 Liquid and Gas Sample Panel

The liquid and gas sample panel provides reactor coolant, containment sump, and containment atmosphere sampling capability. All postaccident sample system analysis and sample components which contain postaccident liquids and gases are mounted in the liquid and gas sample panel behind a shield structure. The panel incorporates integral lead shot and steel shielding to limit operator radiation exposure levels from the panel components. The rear of the panel is enclosed and includes provisions for exhausting to the plant ventilation system to prevent airborne contamination of the sample area. An integral spray system is provided in the panel for washdown and decontamination prior to maintenance.

The panel can be used for routine in-line chemical analysis. Reactor coolant gas stripping and sampling during MODES 1 and 2 is provided. Under accident conditions, the panel provides reactor coolant gas stripping, liquid and gas dilution, in-line chemical analysis, and liquid and gas grab sample capabilities. All high-level samples are confined to the heavily shielded areas.

The postaccident sampling system functional requirements are listed in Table 9.3-4. The in-line instrumentation required to achieve those requirements are contained in the liquid and gas sample panel. The panel contains the means to:

a. Strip reactor coolant of dissolved gases for subsequent analysis.

b. Obtain an undiluted containment air sample.

c. Dilute reactor coolant, containment air, and containment sump samples by a factor of approximately 1000. The diluted samples can be withdrawn by a shielded syringe via port connections located on the front of the liquid and gas sample panel. The liquid and gas sample panel also contains a means to obtain an undiluted reactor coolant gas and liquid grab sample during MODES 1 and 2.

Liquid purges during MODES 1 and 2 can go to the volume control tank or to the postaccident sampling system waste tank. Liquid samples normally gravitate down to the postaccident sampling system waste tank which is located underneath the liquid and gas sample panel. In addition, the liquid and gas sample panel has an overpressure relief valve that relieves to the postaccident sampling system waste tank.

Flushing flows are set at a rate (about 1900 cm^3/minute) so that representative samples are available in about 10 minutes.

To minimize personnel exposure during accident conditions, the liquid and gas sample panel integral lead shielding is of sufficient thickness to limit the direct radiation dose at 1 m in front of the panel to less than 100 mR/hr at 1 hr after the accident from sources within the panel, excluding backscatter and other background sources. This ensures that the total dose that a single operator can receive while obtaining and analyzing a single sample is 5 rem whole body and 75 rem to the extremities.

The specific analyses that the liquid and gas sample panel is required for, as well as the required types of instrumentation, range, and accuracy, are included in Table 9.3-5.

9.3.2.3.3.2 Gas Sampling

The gas sampling section of the liquid and gas sample panel provides the capability to sample the containment atmosphere. Samples are obtained with an internal vacuum pump, thereby providing assurance that samples can be obtained under positive or negative containment pressures. To ensure representative sampling, the entire system is purged prior to sample acquisition and analysis. Postaccident gas samples are routed to the containment after exiting the panel.

After adequate purging has been completed, gas samples may be routed directly to the liquid and gas sample panel mounted gas chromatograph for in-line hydrogen and oxygen analysis. The analysis portion of the instrument is located in the liquid and gas sample panel and the control and readout portion is located on the instrument panel.

Gas samples may also be routed through a dual range dilution loop to reduce the specific activity to a level that is acceptable for grab sampling. Adequate dilution capability is provided by this loop to allow isotopic analysis of postaccident gas samples with existing hot-lab equipment.

The basic concept of the dilution loops involves capturing an undiluted gas sample "bite" in either of two dilution loops of preset fixed volume. The captured gas is then purged with argon into a preevacuated vessel of fixed volume. Finally, additional argon is added to achieve a preselected vessel pressure. The use of two dilution loops of different volume provides a dual-range dilution capability. The final vessel pressure setpoint can also be changed to provide variation in the ultimate dilution ratio.

The panel provides the capability of obtaining grab samples of primary coolant dissolved gases and containment atmosphere through septum ports located on the front of the liquid and gas sample panel. A shielded syringe is used for sample acquisition. Normal operation undiluted gas samples can also be obtained. Valve interlocks are provided to prevent undiluted gas sampling under accident conditions.

The gas sampling system can be evacuated and purged with nitrogen after each sample operation to reduce radiation levels.

9.3.2.3.3.3 Liquid Sampling

System pressure or the containment sump sample pump provides the motive force to obtain liquid samples from all sources. The liquid system can be purged prior to each operation to ensure that representative sampling and analysis is achieved. During MODES 1 and 2, the purged liquid will be routed to the waste disposal system. Under accident conditions, valve interlocks are provided to ensure that the purge can only be routed to the postaccident sampling system waste tank and, ultimately, returned to the containment.

After the system is purged, liquid samples can be routed to various in-line instruments for analysis. Each device has been qualified for use during MODES 1 and 2 as well as under

postaccident conditions. Conductivity, pH, and dissolved oxygen are measured in-line using sample probes. Boron analysis is provided by an automatic titration device. Chloride analysis is provided through analysis of the diluted liquid sample in the chemistry laboratory. Analysis parameters are displayed on the instrument panel.

Liquid samples can be processed through a gas stripping loop to remove dissolved gases. The stripped gas can then be routed to the gas sampling system for hydrogen analysis, dilution, and/or grab sampling. Normal operation stripped gas may be collected undiluted for routine isotopic analysis. Interlocks are provided to allow grab sampling of only diluted stripped gas in a postaccident situation.

Postaccident liquid samples from the stripping loop are processed through a dilution loop prior to grab sampling. The loop provides a nominal 1:1000 diluted sample for isotopic analysis, chemical analysis, or offsite shipment.

The liquid section of the liquid and gas sample panel incorporates features to flush components with demineralized water after each operation to reduce radiation levels. Liquid wastes from the analysis and dilution sections of the panel are routed to the waste holdup tank during MODES 1 and 2 and to the postaccident sampling system waste tank during postaccident use.

9.3.2.3.3.4 Instrument Panel

The instrument panel provides remote indication of analytical parameters associated with operation of the liquid and gas sample panel. The panel also houses the controls for the gas chromatograph. Chemicals required for operation and calibration of the in-line instruments are located in the instrument panel. The necessary support equipment for the in-line boron analysis is housed in the instrument panel.

The instrument panel contains its own controls, instruments, and mechanical components necessary for its operation. Since no sample fluids enter the panel, shielding is not required. The instrument panel is located in an area away from the liquid and gas sample panel in a low dose rate area to reduce operator exposure associated with monitoring and control functions. The following display devices are provided on the instrument panel:

a. Digital pressure and temperature indicators.

b. pH indicator.

c. Conductivity monitor.

d. Oxygen monitor.

e. Recorders for hydrogen and oxygen concentration.

f. Boron concentration meter (integral with analyzer controls).

9.3.2.3.3.5 Electrical Control Panel

The electrical control panel houses all electrical support equipment necessary for operation of the liquid and gas sample panel. All remotely operated valves in the liquid and gas sample panel are operated from the electrical control panel. A lighted mimic display showing the status of valves and equipment is provided as part of the electrical control panel. The accident

isolation switch which locks out all normal sampling functions under accident conditions is also located on this panel.

9.3.2.3.3.6 Postaccident Sampling System Coolers

In order to cool down influent samples, four tube and shell type coolers are provided using component cooling water as their cooling medium. These coolers serve the three reactor coolant sample lines and the containment sump A sample line. A separate cooler for each liquid sample line ensures representative samples and minimizes the likelihood of sample cross-contamination. The coolers are mounted behind the liquid and gas sample panel to take advantage of the liquid and gas sample panel integral shielding to protect adjacent areas. Design parameters are as follows: tube temperature of 700°F, shell temperature of 350°F, tube pressure of 2485 psig, shell pressure of 150 psig, tube flow of 0.1 gpm, and shell flow of 10 gpm.

9.3.2.3.3.7 Postaccident Sampling System Waste Tank

The postaccident sampling system waste tank is provided to collect sample waste from calibration operations, purges, flushes, and analyses. It is sized to contain the fluid generated during any single sample operation, including a purge of at least three line volumes. It is located within the liquid and gas sample panel support pad and below the liquid and gas sample panel so that it receives the sample drainage by gravity. It is an 18-gallon tank having a design pressure range from full vacuum to 150 psig and a design temperature of 150°F. It is normally vented to the intermediate building heating, ventilation, and air conditioning exhaust via the liquid and gas sample panel exhaust plenum through a normally open valve. During postaccident conditions, an evacuation compressor will cycle on tank pressure to vent the tank to the containment atmosphere. The tank level is maintained by a level controlled transfer pump cycling on and off. The tank contents can be emptied by either the transfer pump (primary) or by nitrogen blowdown (backup) to either the waste holdup tank or sump A in containment. The postaccident sampling system waste tank will collect potentially low quality water from the containment sump sample and chemicals from instrument calibration. Waste from these operations should not normally be returned to the volume control tank.

For overpressure protection a rupture disk is used for leaktightness and to ensure adequate response to rapid pressure excursions as would occur with a hydrogen detonation. During operation the rupture disk discharge would be routed directly to the intermediate building heating, ventilation, and air conditioning system.

9.3.2.3.3.8 Postaccident Sampling System Waste Transfer Pump

A postaccident sampling system waste transfer pump is provided to empty the postaccident sampling system waste tank of its contents during typical operation. For postaccident operation the waste transfer pump discharges to the containment A sump. This is accomplished by pumping in the reverse-to-normal flow direction through the containment A sump pump discharge line. During MODES 1 and 2, the pump discharges to the waste holdup tank. It has an auto/manual switch where auto causes it to cycle to maintain the postaccident sampling system waste tank in a controlled level band. Its design parameters are 1 gpm flow, 150°F temperature, and 150 psig pressure, with a discharge pressure of 85 psig.

9.3.2.3.3.9 Postaccident Sampling System Waste Tank Evacuating Compressor

A postaccident sampling system waste tank evacuating compressor is provided to maintain the postaccident sampling system waste tank at atmospheric pressure during accident conditions to ensure adequate gravity drainage from the liquid and gas sample panel. The evacuating compressor will discharge to the containment during postaccident operation since the process stream could contain postaccident gases which evolve from the reactor coolant. During MODES 1 and 2, the tank is vented via the liquid and gas sample panel plenum to the intermediate building heating, ventilation, and air conditioning system.

The compressor has an auto/manual switch where auto causes it to cycle off of a pressure transmitter in the waste tank. Its design parameters are 150 psig, 120°F, and 0.5 scfm minimum. It has a discharge pressure of 75 psia and a suction pressure of 14.0 to 14.7 psia.

9.3.2.3.3.10 Containment Sump A Sample Pump

The containment sample pump is an air-operated, 1-gpm pump. Its design parameters are 150 psig and 250°F, and it has a discharge head of 50 psig. It can discharge either to the waste holdup tank or to the liquid gas and sample panel via a heat exchanger.

9.3.3 EQUIPMENT AND FLOOR DRAINS SYSTEMS

The equipment and floor drain systems serve to route leakage from equipment and compartments in order to provide proper control of leakage, prevent uncontrolled communication between areas as necessary, and to allow monitoring of leakage prior to disposition. Pedestals and curbs are provided to prevent safety-related equipment from being flooded with standing water. The equipment and floor drains are included in the liquid waste disposal system and are included in Drawings 33013-1259 and 33013-1270 through 33013-1272.

The floor drain systems for the diesel generator rooms, battery rooms, and the control building air handling room, are equipped with backflow devices to prevent both internal and external flooding from affecting the rooms.

9.3.4 CHEMICAL AND VOLUME CONTROL SYSTEM

9.3.4.1 Design Bases

The following design criteria were used during the licensing of Ginna Station. They represent the Atomic Industrial Forum version of proposed criteria issued by the AEC for comment on July 10, 1967. Conformance with 1972 General Design Criteria of 10 CFR 50, Appendix A (i.e., General Design Criteria 1, 2, 5, 14, 29, 33, 35, 60, and 61), as they relate to the chemical and volume control system and components is discussed in Section 3.1.2.

9.3.4.1.1 Redundancy of Reactivity Control

CRITERION: Two independent reactivity control systems, preferably of different principles, shall be provided (AIF-GDC 27).

In addition to the reactivity control achieved by the control rods, reactivity control is provided by the chemical and volume control system which regulates the concentration of boric acid

solution neutron absorber in the reactor coolant system. The system is designed to prevent, under anticipated system malfunction, uncontrolled or inadvertent reactivity changes which might stress the system beyond allowable limits.

9.3.4.1.2 Reactivity Holddown Capability

CRITERION: The reactivity control systems provided shall be capable of making the core subcritical under credible accident conditions with appropriate margins for contingencies and limiting any subsequent return to power such that there will be no undue risk to the health and safety of the public (AIF-GDC 30).

Normal reactivity shutdown capability is provided by control rods with boric acid injection used to compensate for the long-term xenon decay transient and for plant cooldown. Any time that the plant is at power the quantity of boric acid retained in the sources of boric acid and ready for injection will always exceed that quantity required for normal MODE 5 (Cold Shutdown) and will also exceed the quantity of boric acid required to bring the reactor to MODE 3 (Hot Shutdown) and to compensate for subsequent xenon decay.

The boric acid solution is transferred from the boric acid storage tanks by boric acid transfer pumps to the suction of the charging pumps which inject boric acid into the reactor coolant. Any charging pump and boric acid transfer pump can be operated from diesel-generator power on loss of primary electric power. *Reference 5* stated that, if required, boric acid addition from the RWST was capable of shutting the reactor down from full power. *Reference 5* provided an example for a typical operating cycle that demonstrated boric acid injection from the RWST to the RCS by one charging pump operating at its maximum flow rate of 60 gpm was capable of shutting down the reactor with no rods inserted in approximately 81 minutes. This example demonstrated that the use of a charging pump and boric acid from the RWST can provide sufficient negative reactivity to shut the reactor down.

Sufficient boric acid from the RWST can also be injected to compensate for xenon decay beyond the equilibrium level, with one charging pump operating at its minimum speed, and thereby delivering in excess of the required minimum flow of approximately 9 gpm into the reactor coolant system. If three charging pumps are available, these time periods are reduced. Additional boric acid is employed if it is desired to bring the reactor to a cold shutdown condition.

On the basis of the above, the injection of boric acid is shown to afford backup reactivity shutdown capability, independent of control rod clusters which normally serve this function in the short-term situation. Shutdown for long-term and reduced temperature conditions can be accomplished with boric acid injection using redundant components.

9.3.4.1.3 Reactivity Hot Shutdown Capability

CRITERION: The reactivity control system provided shall be capable of making and holding the core subcritical from any hot standby or hot operating condition (AIF-GDC 28).

The reactivity control systems provided are capable of making and holding the core subcritical for any hot operating (MODES 1 and 2) condition, including those resulting from power

changes. The maximum excess reactivity expected for the core occurs for the cold, clean condition at the beginning of each cycle. The control rods are divided into two categories comprising a control group and shutdown groups.

The control group, used in combination with chemical shim (soluble boron) provides control of the reactivity changes of the core throughout the life of the core at power conditions. This group of control rods is used to compensate for short-term reactivity changes at power that might be produced due to variations in reactor power requirements or in coolant temperature. The chemical shim control is used to compensate for the more slowly occurring changes in reactivity throughout core life such as those due to fuel depletion and fission product buildup and decay.

9.3.4.1.4 Reactivity Shutdown Capability

CRITERION: One of the reactivity control systems provided shall be capable of making the core subcritical under any anticipated operating condition (including anticipated operational transients) sufficiently fast to prevent exceeding acceptable fuel damage limits. Shutdown margin should assure subcriticality with the most reactive control rod fully withdrawn (AIF-GDC 29).

The shutdown groups are provided to supplement the control group of control rods to make the reactor subcritical with the required shutdown margin following trip from any credible operating condition to the hot zero-power condition assuming the most reactive rod cluster control assembly remains in the fully withdrawn position. Manually controlled boric acid addition is used to supplement the control rods in maintaining the shutdown margin for the long-term conditions of xenon decay or plant cooldown.

9.3.4.1.5 Codes and Classifications

All pressure-retaining components (or compartments of components) which are exposed to reactor operating pressure and temperatures at rated power and pressure-retaining components (or compartments of components) through which reactor coolant circulates at reduced pressures and temperatures generally comply with the following codes:

A. System pressure vessels - ASME Boiler and Pressure Vessel Code, Section III, Class C, including paragraph N-2113.

B. System valves and fittings, USAS B16.5; piping, USAS B31.1, including nuclear code cases.

The regenerative heat exchanger and excess letdown heat exchanger (tube side) are specified as Class A vessels.

The components of the chemical and volume control system comply with the codes and standards as discussed in Section 3.2.

9.3.4.2 System Design and Operation

9.3.4.2.1 General

The chemical and volume control system is designed to perform the following functions:

A. To control the reactor coolant inventory, chemistry conditions, activity level, and boron concentration.

B. To provide seal-water injection flow to the reactor coolant pumps.

C. To process reactor coolant effluent for reuse of boric acid and makeup water.

Reactor coolant water chemistry specifications are listed in plant procedures. Contaminant limits are included in the Technical Specifications and the Technical Requirements Manual (TRM).

In order to perform the above functions of the chemical and volume control system, a continuous feed-and-bleed is maintained between the reactor coolant system and the chemical and volume control system.

Water is **letdown** from the reactor coolant system, through a regenerative heat exchanger to minimize thermal loss to the reactor coolant system. The pressure is reduced through orifices and further cooling occurs in a nonregenerative heat exchanger followed by a second pressure reduction. Water is returned to the reactor coolant system by the charging system, which also provides seal injection flow to the reactor coolant pumps.

The chemistry of the letdown flow may be altered by passing the flow through demineralizers that remove ionic impurities. A filter removes solids, and the gases dissolved in the coolant are removed in the volume control tank. The boric acid concentration in the coolant is changed by the reactor makeup portion of the chemical and volume control system as required for reactivity control. Excess coolant may be diverted into the boron recycle portion of the chemical and volume control system for reprocessing into pure water and concentrated boric acid. System components that have a design pressure and temperature less than the reactor coolant system design limits are provided with overpressure protective devices.

System discharges from overpressure protective devices (safety valves) and system leakages are directed to closed systems. Effluents removed from such closed systems are monitored and discharged under controlled conditions. The system design enables postoperational hydrostatic testing to applicable code test pressures. The relief valves will be gagged during hydrostatic testing. The relief valves in systems that are hydrostatically tested after MODE 6 (Refueling) operations will be set at the system design pressure.

9.3.4.2.2 Letdown and Charging Systems

9.3.4.2.2.1 General

During plant operation, reactor coolant flows through the letdown line from the reactor coolant loop B crossover leg and is returned to the loop B cold leg or (alternatively) the loop B hot leg via a charging line. An alternate charging line is provided to the cold leg of loop A. The

charging and letdown systems flow diagrams are provided in Drawings 33013-1264 and 33013-1265.

Each of the connections to the reactor coolant system has an isolation valve located close to the loop piping. In addition, a check valve is located downstream of the charging line isolation valve. Reactor coolant entering the chemical and volume control system flows through the shell side of the regenerative heat exchanger where its temperature is reduced. The coolant then flows through a letdown orifice which reduces the coolant pressure. The cooled, low-pressure water leaves the reactor containment and enters the auxiliary building where it undergoes a second temperature reduction in the tube side of the nonregenerative heat exchanger followed by a second pressure reduction by the low-pressure letdown valve. After passing through one of the mixed-bed demineralizers, where ionic impurities are removed, coolant flows through the reactor coolant filter and enters the volume control tank through a spray nozzle.

Hydrogen is automatically supplied, as determined by pressure control, to the vapor space in the volume control tank, which is predominantly hydrogen and water vapor. The hydrogen within this tank is, in turn, the supply source to the reactor coolant. Fission gases are periodically removed from the system by venting the volume control tank prior to a cold or MODE 6 (Refueling) shutdown.

Next, the coolant flows to the charging pumps, which raise the pressure above that in the reactor coolant system. The coolant then enters the containment, passes through the tube side of the regenerative heat exchanger, and is returned to the reactor coolant system.

The cation bed demineralizer, located downstream of the mixed-bed demineralizers, is used intermittently to control cesium activity in the coolant and also to remove excess lithium which is formed from Boron-10 (n, α) Lithium-7 reaction.

Letdown flow from the residual heat removal system allows purification of the reactor coolant during shutdown conditions when the temperature of the reactor coolant is maintained by the residual heat removal system.

Excess letdown is used to maintain the flow balance between the letdown and charging systems if the normal letdown path is inoperable, or for additional letdown when necessary. Excess letdown is taken from the reactor coolant loop A crossover leg and flows to the excess letdown heat exchanger. The individual components of the letdown and charging systems are described in Section 9.3.4.3.

9.3.4.2.2.2 Charging Pump Control

The speed of each charging pump can be controlled manually or automatically. During MODES 1 and 2, two of the three pumps are running with one in automatic and one in manual control. The automatically operated charging pump speed is modulated in accordance with pressurizer level. During load changes, the pressurizer level setpoint is varied automatically to compensate partially for the expansion or contraction of the reactor coolant associated with the T_{AVG} changes. Charging pump speed does not change rapidly with pressurizer level variations due to the reset action of the pressurizer level controller.

If the pressurizer level increases, the speed of the pump decreases; likewise if the level decreases, the speed increases. If the charging pump on automatic control reaches the high speed limit, an alarm is actuated. The speed of the second pump is manually regulated. If the speed of the charging pump on automatic control does not decrease and the second charging pump is operating at maximum speed, the third charging pump can be started and its speed manually regulated. If the speed of the charging pump on automatic control decreases to its minimum value, an alarm is actuated and the speed of the pumps on manual control is reduced.

To ensure that the charging pump flow is always sufficient to meet both the seal-water and minimum charging flow requirements, the pump has a variable control stop that does not permit pump flow lower than the specified minimum. This control stop is adjustable to permit higher flow limits to be set if mechanical reactor coolant pump seal leakage increases during plant life.

Charging flow is indicated on duplicate indicators in the control room on the left and middle sections of the main control board. Seal injection flow is indicated on a dual indicator in the control room on the middle section of the main control board beside the charging flow indicator and in proximity of the charging flow controller. The charging flow indicators are scaled from 0 to 75 gpm and the seal injection flow indicators are scaled from 0 to 15 gpm. Total charging pump flow is determined by adding the two indicators. Also, the two flows are input to the plant process computer system where they are combined to produce total flow.

9.3.4.2.3 Seal-Water Injection System

A portion of the high-pressure charging flow is injected into the reactor coolant pumps between the pump impeller and the shaft seal so that the seals are not exposed to high temperature reactor coolant. Part of the flow is the shaft seal leakage flow and the remainder enters the reactor coolant system through a labyrinth seal on the pump shaft. The shaft seal leakage flow passes through the seals, is filtered, cooled in the seal-water heat exchanger, and returned to the volume control tank. The remaining flow is diverted through the labyrinth seal, cools the lower radial bearing, and enters the reactor coolant system. Seal water inleakage to the reactor coolant system requires a continuous letdown of reactor coolant to maintain the desired inventory.

The seal-water injection system is shown in Drawing 33013-1265, Sheets 1 and 2.

9.3.4.2.4 Reactor Makeup Control System

9.3.4.2.4.1 System Description

The reactor makeup control system is shown in Drawings 33013-1266 and 33013-1269. The reactor makeup control, operated from the control room, manually preselects makeup composition to the charging pump suction header or the volume control tank in order to adjust the reactor coolant boron concentration for reactivity control. Makeup is provided to maintain the desired operating fluid inventory in the volume control tank. The operator can stop the makeup operation at any time in any operating mode by remotely closing the makeup stop valves.

One reactor makeup water pump and one boric acid transfer pump are normally selected for auto standby. The other two pumps are placed in the pull stop position. Tripping of either pump during its operation would cause either a reactor makeup water flow deviation alarm or boric acid flow deviation alarm on the main control board.

Makeup water to the reactor coolant system is provided by the chemical and volume control system from the following sources:

a. The reactor makeup water tank, which provides water for dilution when the reactor coolant boron concentration is to be reduced.
b. The boric acid storage tanks, which supply concentrated boric acid solution when reactor coolant boron concentration is to be increased.
c. The refueling water storage tank (RWST), which supplies borated water for emergency makeup.
d. The chemical mixing tank, which is used to inject small quantities of solution when additions of hydrazine or pH control chemicals are necessary.
e. The monitor tanks, which provide water for dilution when the reactor makeup water tank is out of service.

Makeup for normal plant leakage is regulated by the reactor makeup control system, which is set by the operator to blend water from the reactor makeup water tank with concentrated boric acid to match the reactor coolant boron concentration. Makeup is added automatically if the volume control tank level falls below a preset point.

Boric acid is dissolved in hot water in the batching tank to the desired concentration. A transfer pump is used to transfer the batch to the boric acid storage tanks, which are maintained at a concentration, minimum volume, and minimum solution temperature in accordance with the Technical Requirements Manual (TRM). Small quantities of boric acid solution are metered from the discharge of an operating transfer pump for blending with makeup water as makeup for normal leakage or for increasing the reactor coolant boron concentration during MODES 1 and 2. Electric immersion heaters maintain the temperature of the boric acid storage tank solution high enough to prevent precipitation. The lower portion of the batching tank is jacketed to permit heating of the batching tank solution with low-pressure steam.

The boric acid flow control valve in the line from the boric acid storage tanks to the boric acid blender provides accurate fluid flow regulation throughout the range from 1 to 10 gpm.

The original Westinghouse reactor water makeup and blender system design did not account for the volumetric expansion of water in the isolated heat traced piping of the blender subsystem. During dilution evolutions, reactor makeup water is introduced into the blender.

The reactor water makeup system water is not heated and therefore, during normal operation, this water can be as cold as 60° F. After the dilution evolution, the heat traced blender piping is isolated by a combination of AOVs and check valves. This isolated blender piping is then heated by three different heat trace systems. Since there is no room for the expansion of the heated water, a bellows style accumulator has been added to the reactor makeup water system to allow for the expansion of the heated water from the isolated heat traced piping connected

to the blender piping assembly. An enlarged section of pipe has also been added to the system to prevent any nitrogen intrusion into the charging system in the event of accumulator failure.

The various modes of operation of the reactor makeup control system are described below.

9.3.4.2.4.2 Automatic Makeup

The automatic makeup mode of operation of the reactor makeup control provides boric acid solution preset to match the boron concentration in the reactor coolant system. The automatic makeup compensates for minor leakage of reactor coolant without causing significant changes in the coolant boron concentration.

Under normal plant operating conditions, the mode selector switch and makeup stop valves are set in the automatic makeup position. A preset low level signal from the volume control tank level controller causes the automatic makeup control action to open the makeup stop valve to the charging pump suction, the concentrated boric acid control valve, and the reactor makeup water control valve. The flow controllers then blend the makeup stream according to the preset concentration. Makeup addition to the charging pump suction header causes the water level in the volume control tank to rise. At a preset high level point, the makeup is stopped; the reactor makeup water control valve closes, the concentrated boric acid control valve closes, and the makeup stop valve to charging pump suction closes.

9.3.4.2.4.3 Dilution

The dilute mode of operation permits the addition of a preselected quantity of reactor makeup water at a preselected flow rate to the reactor coolant system. The operator places the makeup system control switch in the stopped position and verifies the makeup stop valves to the volume control tank (AOV-110C) and to the charging pump suction (AOV-110B) are closed. The reactor makeup water controller setpoint is adjusted to the proper flowrate, and the reactor makeup water batch integrator is set to the proper quantity. Then the makeup system mode selector switch is placed to the dilute position. When the makeup system control switch is placed in the armed position, the selected reactor makeup pump starts, the reactor makeup water control valve (AOV-111) opens to the preselected position and the makeup stop valve to the volume control tank inlet (AOV-110C) is opened. If the dilution flow deviates +/-5 gpm from the preselected flow rate, an alarm will annunciate on the main control board. The reactor makeup is added in the volume control tank and then goes to the charging pump suction header. Excessive rise of the volume control tank water level is prevented by automatic actuation (by the tank level controller) of a three-way diversion valve, which routes the reactor coolant letdown flow to the holdup tanks. When the preset quantity of reactor makeup water has been added, the batch integrator causes the reactor makeup water control valve and the makeup water stop valve to the volume control tank inlet header to close, and the makeup water pump stops. The operator then realigns the system as desired.

9.3.4.2.4.4 Boration

The borate mode of operation permits the addition of a preselected quantity of concentrated boric acid solution at a preselected flow rate to the reactor coolant system. The operator sets the makeup stop valves to the volume control tank and to the charging pump suction in the

closed position, the mode selector switch to borate, the concentrated boric acid flow controller setpoint to the desired flow rate, and the concentrated boric acid batch integrator to the desired quantity. Opening the makeup stop valve to the charging pump suction permits the concentrated boric acid to be added to the charging pump suction header. The total quantity added in most cases is so small that it has only a minor effect on the volume control tank level. When the preset quantity of concentrated boric acid solution has been added, the batch integrator causes the concentrated boric acid control valve to close.

The normal capability to add boron to the reactor coolant is sufficient so that no limitation is imposed on the rate of cooldown of the reactor upon shutdown. The maximum rates of boration and the equivalent coolant cooldown rates are given in Table 9.3-6. One set of values is given for the addition of boric acid from a boric acid storage tank with one boric acid transfer pump and one charging pump operating. The other set assumes the use of refueling water but with two of the three charging pumps operating. The rates are based on full operating temperature and on the end of the core life when the moderator temperature coefficient is most negative.

9.3.4.2.5 Boron Recycle System

9.3.4.2.5.1 System Description

The boron recycle system is designed to reduce the amount of liquid waste produced by plant operations by recycling the discharge from the reactor coolant system. The boron recycle system is shown in Drawings 33013-1266 and 33013-1268.

During plant startup, MODES 1 and 2, load reductions, and shutdowns, liquid effluents containing boric acid flow from the reactor coolant system through the letdown line and are collected in the holdup tanks. As liquid enters the holdup tanks, the cover gas is displaced to the gas decay tanks in the waste disposal system through the waste vent header. The concentration of boric acid in the holdup tanks varies throughout core life from the refueling concentration to the boron concentration at which the deborating demineralizers are used. A recirculation pump is provided to transfer liquid from one holdup tank to another.

Liquid effluent in the holdup tanks is processed as a batch operation. This liquid is pumped through the base removal ion exchanger and cation ion exchanger which primarily remove lithium hydroxide and long-lived cesium. It then flows through the ion exchanger filter and into the gas stripper where dissolved gases are removed from the liquid. Effluent from the gas stripper enters the boric acid evaporator where dilute boric acid solution is concentrated to a selected weight percent boric acid solution.

The condensate leaves the condenser and is pumped through a distillate cooler before entering one of the two evaporator condensate demineralizers where evaporator boron carryover is removed. Condensate then flows through the condensate filter and accumulates in a monitor tank.

Subsequent handling of the condensate is dependent on the results of sample analysis. Discharge from the monitor tanks may be pumped to the reactor makeup water storage tank, aligned to the suction of the reactor makeup water pumps (when the reactor makeup water

tank is out of service), recycled through the evaporator condensate demineralizers, returned to the waste holdup tanks for reprocessing or discharged to the environment with the condenser circulating water within the allowable activity concentration. If the sample analysis of the monitor tank contents indicates that it may be discharged safely to the environment, two valves must be opened to provide a discharge path. There is only one discharge path from the plant. As the effluent leaves, it is continuously monitored. If an unexpected increase in radioactivity is sensed, one of the discharge valves closes automatically and an alarm sounds in the control room.

Boric acid evaporator bottoms are discharged through a concentrates filter to the concentrates holding tank. Solution collected in the concentrates holding tank is sampled and then transferred to the boric acid storage tanks if analysis indicates that it meets specifications. Otherwise the solution is pumped to the holdup tanks for reprocessing by the evaporator train.

The concentrated solution can also be pumped from the evaporator to containers. These containers can then be stored at the plant site for ultimate shipment offsite for disposal.

The deborating demineralizers are used intermittently to remove boron from the reactor coolant near the end of the core life. When the deborating demineralizers are in operation, the letdown stream passes from the mixed-bed demineralizers, through the deborating demineralizers, and into the volume control tank after passing through the reactor coolant filter.

9.3.4.2.5.2 Alarm Functions

The reactor makeup control is provided with alarm functions to call the operator's attention to the following conditions:

a. Deviation of reactor makeup water flow rate from the control setpoint.

b. Deviation of concentrated boric acid flow rate from the control setpoint.

c. Low level (makeup initiation point) in the volume control tank when the reactor makeup control selector is not set for the automatic makeup control mode.

9.3.4.2.6 Heat Tracing System

Electrical heat tracing is installed under the insulation on all piping, valves, line-mounted instrumentation, and components normally containing concentrated boric acid solution, including those lines beyond shut-off valves which would contain stagnant concentrated solution following closure. The heat tracing is designed to prevent boric acid precipitation due to cooling, by compensating for heat loss. There are two trains of heaters. Each is capable of heating components, piping, and valves above the minimum required solution temperature. One train is normally used with the second train used as a backup in case of failure. Locations in which heat tracing is not used are as follows:

A. Lines that may transport concentrated boric acid but are subsequently flushed with reactor coolant or other liquid of low boric acid concentration during MODES 1 and 2.

B. The boric acid storage tanks, which are provided with immersion heaters.

C. The batching tank, which is provided with a steam jacket.

D. The concentrates holding tank, which is provided with an immersion heater.

Duplicate tracing on sections of the chemical and volume control system normally containing boric acid solution provides standby capacity if the operating tracing malfunctions.

The heat tracing system is capable of maintaining the piping contents above the minimum solution temperature corresponding to the boron concentration ranges specified in the Technical Requirements Manual (TRM). An internal upper limit of approximately 200°F is currently established, but authorization for temperatures up to 250°F has been given for specific analyzed piping. The heat tracing system will be supplied with power from the emergency diesel generators following a loss of offsite power. The heat trace system is required to be operational during normal power, startup, and transient conditions. Temperature detectors, alarm and control functions, and electrical power requirements for the heat tracing are not shown on the process flow diagram.

9.3.4.3 Component Description

Tables 9.3-6 and 9.3-7 list the system performance requirements and data for individual system components.

9.3.4.3.1 Letdown and Charging Systems

9.3.4.3.1.1 Regenerative Heat Exchanger

The regenerative heat exchanger is designed to recover the heat from the letdown stream by reheating the charging stream during MODES 1 and 2. This exchanger also limits the temperature rise which occurs at the letdown orifices during periods when letdown flow exceeds charging flow by a greater margin than at normal letdown conditions.

The letdown stream flows through the shell of the regenerative heat exchanger and the charging stream flows through the tubes. The unit is made of austenitic stainless steel, and is of all-welded construction. The exchanger is designed to withstand 2000 step changes in shell side fluid temperature from 100°F to 560°F during the design life of the unit.

9.3.4.3.1.2 Letdown Orifices

One of the three letdown orifices controls the flow of the letdown stream during MODES 1 and 2 and reduces the pressure to a value compatible with the nonregenerative heat exchanger design. Two of the letdown orifices are designed to pass normal letdown flow. The other orifice is used to attain maximum purification flow at normal reactor coolant system operating pressure. The orifices are placed in service by remote manual operation of their respective isolation valves. One or both of the standby orifices may be used in parallel with the normally operating orifice in order to increase letdown flow when the reactor coolant system pressure is below normal. This arrangement provides a full standby capacity for control of letdown flow. Each orifice consists of bored pipe made of austenitic stainless steel.

9.3.4.3.1.3 Nonregenerative Heat Exchanger

The nonregenerative heat exchanger cools the letdown stream to the operating temperature of the mixed-bed demineralizers. Reactor coolant flows through the tube side of the exchanger while component cooling water flows through the shell. The letdown stream outlet temperature is automatically controlled by a temperature control valve in the component cooling water outlet stream. The unit is a multiple-tube-pass heat exchanger. All surfaces in contact with the reactor coolant are austenitic stainless steel, and the shell is carbon steel.

9.3.4.3.1.4 Mixed-Bed Demineralizers

Two flushable mixed-bed demineralizers maintain reactor coolant purity. A Lithium-7 cation resin and a hydroxyl form anion resin are initially charged into the demineralizers. Both forms of resin remove fission and corrosion products, and in addition, the reactor coolant causes the anion resin to be converted to the borate form. The resin bed is designed to reduce the concentration of ionic isotopes in the purification stream, except for cesium, yttrium, and molybdenum, by a minimum factor of 10.

Each demineralizer is sized to accommodate the maximum letdown flow. One demineralizer serves as a standby unit for use if the operating demineralizer becomes exhausted during operation.

The demineralizer vessels are made of austenitic stainless steel, and are provided with suitable connections to facilitate resin replacement when required. The vessels are equipped with a resin retention screen. Each demineralizer has sufficient capacity to enable MODE 6 (Refueling) after operation for one core cycle with 1% of the fuel rods containing pinholes or fine cracks.

9.3.4.3.1.5 Cation Bed Demineralizer

The original cation demineralizer has a broken retention screen and is no longer used. The "A" letdown deborating demineralizer is being used as the cation demineralizer. It is a flushable resin bed in the hydrogen form and is located downstream of the mixed bed demineralizers and is used to control the concentrations of Lithium-7 which build up in the coolant from the Boron-10 (n, α) Lithium-7 reaction. The demineralizer also has the capacity to maintain the Cesium-137 concentration in the coolant below 1.0 $\mu Ci/cm^3$ with 1% defective fuel. The demineralizer would be used intermittently to control cesium.

The demineralizer is made of austenitic stainless steel and is provided with suitable connections to facilitate resin replacement when required. The vessel is equipped with a resin retention screen.

9.3.4.3.1.6 Deborating Demineralizers

When required, two anion demineralizers remove boric acid from the reactor coolant system fluid. The demineralizers normally are used only near the end of the core cycle. Hydroxyl based ion-exchange resin is used to reduce reactor coolant system boron concentration by releasing a hydroxyl ion when a borate ion is absorbed. The spent resin is flushed to the spent resin storage tank.

9.3.4.3.1.7 Resin Fill Tank

The resin fill tank is used to charge fresh resin to the demineralizers. The line from the conical bottom of the tank is fitted with a dump valve and may be connected to any one of the demineralizer fill lines. The demineralizer water and resin slurry can be sluiced into the demineralizer by opening the dump valve. The tank, designed to hold approximately two-thirds of the resin volume of one mixed-bed demineralizer, is made of austenitic stainless steel.

9.3.4.3.1.8 Reactor Coolant Filter

The disposable filter collects resin fines and particulates larger than 25 microns from the letdown stream. The vessel is made of austenitic stainless steel, and is provided with connections for draining and venting. Design flow capacity of the filter is equal to the maximum purification flow rate. The filter is equipped with an external bypass line which allows for continuous letdown flow while the filter cartridge is being replaced.

9.3.4.3.1.9 Volume Control Tank

The volume control tank collects the excess water released during ascension from zero to full power that is not accommodated by the pressurizer. It also receives the excess coolant release caused by the deadband in the reactor control temperature instrumentation. Overpressure of hydrogen gas is maintained in the volume control tank to control the hydrogen concentration in the reactor coolant at the recommended levels of EPRI TR-105714, "PWR Primary Water Chemistry Guidelines."

A spray nozzle is located inside the tank on the inlet line from the filter. This spray nozzle provides intimate contact to equilibrate the gas and liquid phases. A remotely operated vent valve permits removal of gaseous fission products which collect in this tank. The volume control tank also acts as a head tank for the charging pumps and a reservoir for the leakage from the reactor coolant pump controlled leakage seal. Two level transmitters have been installed on the volume control tank to control the operation of the holdup diversion, and the volume control tank isolation and automatic makeup valves. The tank is constructed of austenitic stainless steel.

9.3.4.3.1.10 Charging Pumps

Three charging pumps inject coolant into the reactor coolant system. The pumps are the variable speed positive displacement type, and all parts in contact with the reactor coolant are fabricated of austenitic stainless steel or other material of adequate corrosion resistance. Special low chloride content packing is used in the pump glands. These pumps have stuffing boxes with leakoffs to collect reactor coolant. A closed system for reclaiming the packing leakoff has been installed to reduce the release of fission gases from the chemical and volume control system and the amount of high activity water going into the liquid waste system. The pump design prevents lubricating oil from contaminating the charging flow, and the integral discharge valves act as check valves.

Each pump is designed to provide the full charging line flow and the reactor coolant pump seal-water supply during normal seal leakage. Each pump is designed to provide rated flow against a pressure equal to the sum of the reactor coolant system normal maximum pressure

(existing when the pressurizer Pressurizer Power Operated Relief Valve (PORV) is operating) and the piping, valve, and equipment pressure losses at the design charging pump flow with two pumps in operation.

9.3.4.3.1.11 Charging Pump Leakoff Tank

The pump packing gland leakoff goes to a charging pump leakoff tank. The leakoff tank has two pumps with local controls which pump at 3 gpm to the holdup tanks.

9.3.4.3.1.12 Charging Pump Dampener

The charging pump pulse dampener is a device meant to eliminate pulsations in discharge pressure from the pump. The dampener is 9 ft long and 2 ft in diameter with a divider plate and a pipe through the plate. Charging flows into the tank through the center pipe and out one of the two outlets.

9.3.4.3.1.13 Excess Letdown Heat Exchanger

The excess letdown heat exchanger cools reactor coolant letdown by an amount equal to the nominal injection rate through the reactor coolant pump labyrinth seal, if letdown through the regenerative heat exchanger is blocked. The unit is designed to reduce the letdown stream temperature from the cold-leg temperature to 195°F. The letdown stream flows through the tube side and component cooling water is circulated through the shell side. All surfaces in contact with reactor coolant are austenitic stainless steel and the shell is carbon steel. All tube joints are welded. The unit is designed to withstand 12,000 step changes in the tube fluid temperature from 80°F to the cold-leg temperature.

9.3.4.3.2 Seal-Water Injection System

9.3.4.3.2.1 Seal-Water Heat Exchanger

The seal-water heat exchanger removes heat from two sources: reactor coolant pump seal-water returning to the volume control tank and reactor coolant discharge from the excess let-down heat exchanger. Reactor coolant flows through the tubes and component cooling water is circulated through the shell side. The tubes are welded to the tubesheet because leakage could occur in either direction, resulting in undesirable contamination of the reactor coolant or component cooling water. All surfaces in contact with reactor coolant are austenitic stainless steel and the shell is carbon steel.

The unit is designed to cool the excess letdown flow and the sealwater flow to the temperature normally maintained in the volume control tank if all the reactor coolant pumps controlled leakage seals are leaking at the maximum design leakage rate.

9.3.4.3.2.2 Seal-Water Filter

The filter collects particulates larger than 25 microns from the reactor coolant pump seal-water return and from the excess letdown heat exchanger flow. The filter is designed to pass the sum of the excess letdown flow and the maximum design leakage from the reactor coolant pump seals. The vessel is constructed of austenitic stainless steel and is provided with connections for draining and venting. Disposable synthetic filter elements are used.

9.3.4.3.2.3 Seal-Water Injection Filters

Two filters are provided in parallel, each sized for the injection flow. They collect particulates larger than 5 microns from the water supplied to the reactor coolant pump seal.

9.3.4.3.3 Reactor Makeup Control System

9.3.4.3.3.1 Boric Acid Filter

The boric acid filter collects particulates larger than 25 microns from the boric acid solution being pumped to the charging pump suction line. The filter is designed to pass the design flow of two boric acid transfer pumps operating simultaneously. The vessel is constructed of austenitic stainless steel and the filter elements are disposable synthetic cartridges. Provisions are available for venting and draining the filter.

9.3.4.3.3.2 Boric Acid Storage Tanks

The boric acid storage tank capacity is sized to store sufficient boric acid solution for MODE 6 (Refueling) plus enough boric acid solution for a MODE 5 (Cold Shutdown) shortly after full power operation is achieved. In addition, sufficient boric acid solution is available for MODE 5 (Cold Shutdown) if the most reactive control rod is not inserted. The boric acid storage tanks are also discussed in Sections 6.3.2.2.5 and 6.3.6.4.

The concentration of boric acid solution in storage is maintained at a concentration, minimum volume, and minimum solution temperature in accordance with the Technical Requirements Manual (TRM). Periodic manual sampling and corrective action is provided, if necessary, to ensure that these limits are maintained. As a consequence, measured amounts of boric acid solution can be delivered to the reactor coolant to control the chemical poison concentration. The combination overflow and breather vent connection has a water loop seal to minimize vapor discharge during storage of the solution. The tank is constructed of austenitic stainless steel.

Redundant tank heaters and line heat tracing are provided to ensure that the solution will be stored at a temperature that is above the solubility limit for the range of concentrations allowed by the Technical Requirements Manual (TRM). The heating elements are located near the bottom of the tank.

Low concentration boric acid from either boric acid storage tank can be transferred to the boric acid batching tank where the concentration can be increased through piping connections between the discharge lines of the two boric acid transfer pumps and the inlet to the boric acid batching tank.

9.3.4.3.3.3 Batching Tank

The batching tank is sized to hold a 1-week makeup supply of boric acid solution for the boric acid storage tank. The basis for makeup is reactor coolant leakage of 0.50 gpm at beginning of core life. The tank may also be used for solution storage. A local sampling point is provided for verifying the solution concentration prior to transferring it to the boric acid storage tank or for draining the tank. The tank manway is provided with a removable screen to pre-

vent entry of foreign particles. In addition, the tank is provided with an agitator to improve mixing during batching operations. The tank is constructed of austenitic stainless steel and is not used to handle radioactive substances. The tank is provided with a steam jacket for heating the boric acid solution to 165°F.

9.3.4.3.3.4 Boric Acid Tank Heaters

Two 100% capacity electric immersion heaters in each boric acid storage tank are capable of maintaining the temperature of the boric acid solution at 165°F with an ambient air temperature of 40°F. The concentration, minimum volume, and minimum solution temperature are maintained in accordance with the Technical Requirements Manual (TRM). The heaters are sheathed in austenitic stainless steel.

9.3.4.3.3.5 Boric Acid Transfer Pumps

Two 100% capacity canned centrifugal pumps are used to circulate or transfer chemical solutions. The pumps circulate boric acid solution through the boric acid storage tanks and inject boric acid into the charging pump suction header. The design capacity of each pump is equal to the normal letdown flow rate (40 gpm). The design head is sufficient, with one pump out of operation to permit maintenance and considering line and valve losses, to deliver rated flow to the charging pump suction header when volume control tank pressure is at the maximum operating value (relief valve setting). All parts in contact with the solutions are austenitic stainless steel or other adequately corrosion resistant material.

The transfer pumps are operated either automatically or manually from the main control room or from a local control center. The reactor makeup control operates one of the pumps automatically when boric acid solution is required for makeup or boration. Instrumentation is provided to allow boric acid transfer pump discharge pressure to be monitored in the control room.

9.3.4.3.3.6 Boric Acid Blender

The boric acid blender promotes thorough mixing of boric acid solution and reactor makeup water from the reactor coolant makeup circuit. The blender consists of a conventional pipe fitted with a perforated tube insert. All material is austenitic stainless steel. The blender decreases the pipe length required to homogenize the mixture for taking a representative local sample.

9.3.4.3.3.7 Chemical Mixing Tank

The primary use of the chemical mixing tank is in the preparation of caustic solutions for pH control and hydrazine for oxygen scavenging.

The capacity of the chemical mixing tank is determined by the quantity of 35% hydrazine solution necessary to increase the concentration in the reactor coolant by 10 ppm. This capacity is more than sufficient to prepare solution of pH control chemical for the reactor coolant system.

The chemical mixing tank is made of austenitic stainless steel.

9.3.4.3.3.8 Heat Tracing

The heat tracing system is described in Section 9.3.4.2.6.

9.3.4.3.3.9 Reactor Makeup Water Pumps

Two reactor makeup water pumps take suction from either the monitor tanks or the reactor makeup water tank. These pumps are used to feed dilution water to the boric acid blender and are also used to supply makeup water for intermittent flushing of equipment and piping.

Each pump is sized to match the maximum letdown flow (60 gpm). One pump serves as a standby for the other. These centrifugal pumps are constructed of austenitic stainless steel.

9.3.4.3.3.10 Reactor Makeup Water Tank

The reactor makeup water tank is used to store makeup water which is supplied from the monitor tanks and the water treatment plant. Makeup water from the tank discharges to the suction of the reactor makeup water pumps. The tank is plastic-lined carbon steel.

9.3.4.3.4 Boron Recycle System

9.3.4.3.4.1 Holdup Tanks

Three holdup tanks (Drawing 33013-1267) contain radioactive liquid which enters the tank from the letdown line. The liquid is released from the reactor coolant system during startups, shutdowns, and load changes, and from boron dilution to compensate for burnup. The contents of one tank are normally being processed by the gas stripper and evaporator train while another tank is being filled. The third tank is normally kept empty to provide additional storage capacity when needed.

The total liquid storage sizing basis for the holdup tanks is given in Table 9.3-7. Nitrogen cover gas is supplied to the tanks at a rate sufficient to prevent vacuum formation at the design pumping rate of 60 gpm. The three tanks hold two reactor coolant system volumes. The tanks are constructed of austenitic stainless steel.

Seismic qualification for the holdup tanks is listed in Table 3.2-1.

9.3.4.3.4.2 Holdup Tank Recirculation Pump

The recirculation pump is used to mix the contents of a holdup tank or transfer the contents of a holdup tank to another holdup tank. The wetted surface of this pump is constructed of austenitic stainless steel.

9.3.4.3.4.3 Gas Stripper Feed Pumps

The two gas stripper feed pumps supply feed to the gas stripper boric acid evaporator train from a holdup tank. The capacity of each pump is equal to the gas stripper-evaporator capacity. One pump is a standby and is available for operation in the event the operating pump malfunctions. These canned centrifugal pumps are constructed of austenitic stainless steel.

9.3.4.3.4.4 Base Removal Ion Exchanger

Two base removal flushable demineralizers remove anions from the holdup tank effluent. The resin is initially in the hydrogen form. The design flow rate is equal to the gas stripper boric acid evaporator processing rate. The demineralizer vessel is constructed of austenitic stainless steel and contains a resin retention screen.

9.3.4.3.4.5 Cation Ion Exchanger

Two cation flushable demineralizers remove cations (primarily cesium) from the holdup tank effluent. The resin is initially in the hydrogen form. The design flow rate is equal to the gas stripper boric acid evaporator processing rate. The demineralizer vessels are constructed of austenitic stainless steel and contain a resin retention screen.

9.3.4.3.4.6 Ion Exchanger Filter

The filter collects resin fines and particulates larger than 25 microns from the cation ion exchanger. The vessel is made of austenitic stainless steel, and is provided with connections for draining and venting. Disposable synthetic filter elements are used. The design flow capacity is equal to the boric acid evaporator flow rate.

9.3.4.3.4.7 Gas Stripper Equipment

The gas stripper removes nitrogen, hydrogen, and fission gases from the holdup tank feed using steam. The gas stripper equipment consists of a preheater, stripping column with a reflux condenser and associated pumps, piping, and instrumentation.

The gas stripper preheater located upstream of the gas stripper heats the liquid effluent from the holdup tanks from ambient temperature, at the evaporator train processing rate, to approximately 205°F using the gas stripper bottoms which are cooled in the preheater from approximately 220°F to 120°F. The preheater is a regenerative type shell and tube unit constructed of austenitic stainless steel.

The gas stripper consists of a hotwell to store stripped water, a stripping section packed with pall rings, a spray type liquid inlet header, and an overhead integral reflux condenser. Liquid flowing to the gas stripper is controlled to constant rate by a flow controller. The gas stripper is designed for the same flow rate as the evaporator and is designed to reduce the influent gas concentration by a factor of 10^5.

Two gas stripper bottom pumps, operated from level control, transfer effluent from the gas stripper hotwell to the boric acid evaporator via the gas stripper preheater. Each centrifugal pump is rated at the evaporator processing rate. The pumps are austenitic stainless steel and one is an installed standby for the operating pump.

9.3.4.3.4.8 Boric Acid Evaporator Equipment

The boric acid evaporator concentrates boric acid for reuse in the reactor coolant system. Borated water enters the evaporator and the liquid is concentrated to the selected weight percent boric acid. Vapors leave the evaporator and are condensed. The solids decontamination

factor between the condensate and the bottoms is approximately 10^6. All evaporator equipment is constructed of austenitic stainless steel and is supplied as a unit. The boric acid evaporator equipment consists of the boric acid evaporator concentrates pumps, boric acid evaporator, boric acid evaporator condenser, boric acid evaporator condensate pumps, boric acid evaporator condensate cooler, air ejector system, and associated piping and instrumentation.

The boric acid evaporator feed tank has sufficient capacity to hold a 1-day production of boric acid solution produced from MODE 6 (Refueling) concentration feed. The evaporator and condenser heat transfer area is sufficient to maintain the required feed rate. The evaporator is steam heated. Component cooling water flows through the tube of the condenser.

The boric acid distillate cooler reduces the temperature of the condensate to approximately 100°F. The condensate flows through the shell and component cooling water flows through the tubes.

9.3.4.3.4.9 Evaporator Condensate Demineralizers

Two anion demineralizers remove any boric acid contained in the evaporator condensate. Hydroxyl based ion-exchange resin is used to produce evaporator condensate of high purity by releasing a hydroxyl ion when a borate ion is adsorbed. When resin is exhausted, the spent resin is flushed to the spent resin storage tank. The resin volume in each demineralizer is selected to keep resin replacements to an average of once per core cycle. The demineralizers are sized for a flow rate equal to the evaporator flow rate.

9.3.4.3.4.10 Condensate Filter

The filter collects resin fines and particulates larger than 25 microns from the boric acid evaporator condensate stream. The vessel is made of austenitic stainless steel, and is provided with a connection for draining and venting. Disposable synthetic filter elements are used. The design flow capacity of the filter is equal to the boric acid evaporator flow rate.

9.3.4.3.4.11 Concentrates Filter

A disposable synthetic cartridge type filter removes particulates larger than 25 microns from the evaporator concentrates. Design flow capacity of the filter is equal to the boric acid evaporator concentrates transfer pump capacity. The vessel is made of austenitic stainless steel.

9.3.4.3.4.12 Concentrates Holding Tank

The concentrates holding tank is sized to hold approximately the concentrates produced during 1 day of evaporator operation. The tank is supplied with an electrical heater which prevents boric acid precipitation. It is constructed of austenitic stainless steel.

9.3.4.3.4.13 Concentrates Holding Tank Transfer Pumps

Two holding tank transfer pumps discharge boric acid solution from the concentrates holding tank to the boric acid storage tanks. The canned centrifugal pumps are sized to empty the

concentrates holding tank in 30 minutes. The wetted surfaces are constructed of austenitic stainless steel.

9.3.4.3.4.14 Monitor Tanks

The original design was that two monitor tanks permit continuous operation of the evaporator train. When one tank is filled, the contents are analyzed and either reprocessed, discharged to the circulating water discharge, or recycled to the reactor makeup water tank. Each tank is sized to hold the condensate produced during 10 hr of operation from all evaporators at full output to ensure a maximum of two lab analyses per day. These tanks contain a diaphragm membrane and are stainless steel lined.

When the waste evaporator was decommissioned, a new demineralizer waste treatment system was installed. Since installation of this system, the A monitor tank is used for the waste demineralizer effluent. This effluent would be recirculated, sampled and released. To prevent cross contamination, only the B monitor tank is used for the evaporator output.

9.3.4.3.4.15 Monitor Tank Pump

One monitor tank pump discharges water from the monitor tanks. The pump is sized to empty a monitor tank in 2.0 hours. To protect the monitor tank pump, a low-level monitor tank cutout control is provided on the pump. The pump is constructed of austenitic stainless steel.

9.3.4.3.5 Valves

Some valves that perform a modulating function are equipped with two sets of packing and an intermediate leakoff connection that discharges to the waste disposal system. All other valves have stem leakage control. Globe valves are installed with flow over the seats when such an arrangement reduces the possibility of leakage. Basic material of construction is stainless steel for all valves except the batching tank steam jacket valves which are carbon steel.

Isolation valves are provided at all connections to the reactor coolant system. Lines entering the reactor containment also have check valves inside the containment to prevent reverse flow from the containment.

Relief valves are provided for lines and components that might be pressurized above design pressure by improper operation or component malfunction. Pressure relief for the tube side of the regenerative heat exchanger is provided by the charging line isolation valve which is designed to open when pressure under the seat exceeds reactor coolant pressure by 250 psi. All relief valves used in systems handling radioactive fluids are of the closed bonnet design and are constructed of stainless steel.

9.3.4.3.6 Piping

All chemical and volume control system piping handling radioactive liquid is austenitic stainless steel. All piping joints and connections are welded, except where flanged connections are required to facilitate equipment removal for maintenance and hydrostatic testing. Piping,

valves, equipment, and line-mounted instrumentation, which normally contain concentrated boric acid solution, are heated by electrical tracing to ensure solubility of the boric acid.

9.3.4.4 System Evaluation

9.3.4.4.1 Availability and Reliability

A high degree of functional reliability is ensured in this system by providing standby components where performance is vital to safety and by ensuring fail-safe response to the most probable mode of failure. Special provisions include duplicate heat tracing with alarm protection of lines, valves, and components normally containing concentrated boric acid.

The system has three high-pressure charging pumps, each capable of supplying the normal reactor coolant pump seal and makeup flows.

The electrical equipment of the chemical and volume control system is arranged so that multiple items receive power from two 480-V buses (see Drawing 33013-0652). Two of the charging pumps and one of the boric acid transfer pumps are powered from one 480-V safeguards bus and the remaining charging pump and boric acid transfer pump, are powered from the other 480-V safeguards bus. One charging pump and one boric acid transfer pump are capable of meeting MODE 5 (Cold Shutdown) requirements shortly after full power operation. One charging pump taking suction from the refueling water storage tank (RWST) is capable of meeting MODE 5 (Cold Shutdown) requirements following cooldown from MODE 3 (Hot Shutdown) conditions. In case of a loss of offsite power, a charging pump and a boric acid transfer pump can be placed on the emergency diesels, if necessary.

The dc feed for the charging pump 1A control circuits comes from a common dc bus in bus 14 switchgear. A fire in the control complex, cable tunnel, or auxiliary building basement and mezzanine could damage the control circuits for charging pump 1A. Therefore, as part of the alternative shutdown system, a transfer switch is available to transfer the dc feed to an alternative source of dc power. See Section 7.4.4. The transfer is a manual operation.

The power feed for charging pump 1B from bus 16 to the charging pump motor could fail due to direct impingement from a high-energy heating or process line break in the auxiliary building basement. A spare cable is stored in an area outside the auxiliary building.

It is estimated that the auxiliary building could be restored to ambient conditions and the spare cable installed in less than 8 hr, which would precede the need for the charging pump. (See Section 3.6.2.5.1.8.)

9.3.4.4.2 Seismic Analysis

The majority of the chemical and volume control system piping, as shown in Drawings 33013-1264 through 33013-1269 as well as certain components of the auxiliary and emergency systems such as pumps, heat exchangers, tanks, and valves are designated as Seismic Category I. The seismic analysis methods and criteria are presented in Section 3.9.2.

9.3.4.4.3 Leakage Prevention

Quality control of the material and the installation of the chemical and volume control valves and piping, which are designated for radioactive service, is provided in order to essentially eliminate leakage to the atmosphere. The components designated for radioactive service are provided with welded connections to prevent leakage to the atmosphere. However, flanged connections are provided on each charging pump suction and discharge, on each boric acid transfer pump suction and discharge, on the relief valves inlet and outlet, on three-way valves, and on the flow meters to permit removal for maintenance.

The positive displacement charging pumps stuffing boxes are provided with leakoffs to collect reactor coolant before it can leak to the atmosphere. All valves, which are larger than 2 in. and which are designated for radioactive service at an operating fluid temperature above 212°F, are provided with a stuffing box and lantern leakoff connections. Leakage to the atmosphere is essentially zero for these valves. All control valves are either provided with stuffing box and leakoff connections or are totally enclosed. Leakage to the atmosphere is essentially zero for these valves.

Diaphragm valves are provided where the operating pressure and the operating temperature permit the use of these valves. Leakage to the atmosphere is essentially zero for these valves.

9.3.4.4.4 Incident Control

The letdown line and the reactor coolant pump seal-water return line penetrate the reactor containment. The letdown line contains three air-operated orifice valves inside the reactor containment (AOV 200A, 200B and 202) and one air-operated valve outside the reactor containment (AOV-371), which are automatically closed by the containment isolation signal.

The reactor coolant pumps seal-water return line contains no containment isolation valves inside containment and one motoroperated isolation valve outside the reactor containment, which is automatically closed by the containment isolation signal. The line is a 3-in. line and terminates in the volume control tank, which has design pressure higher than containment accident pressure (see Section 6.2.4.4).

The two seal-water injection lines to the reactor coolant pumps, the normal charging line, and the alternate charging line are inflow lines penetrating the reactor containment. Each line contains multiple check valves inside the reactor containment to provide containment isolation in the event of a pipe break.

9.3.4.4.5 Malfunction Analysis

9.3.4.4.5.1 System Failures

To evaluate system safety, failures or malfunctions were assumed concurrent with a loss-of-coolant accident and the consequences analyzed and presented in Table 9.3-8. As a result of this evaluation, it is concluded that proper consideration has been given to station safety in the design of the system.

If a rupture were to take place between the reactor coolant loop and the first isolation valve or check valve, this incident would lead to an uncontrolled loss of reactor coolant. The analysis of loss-of-coolant accidents is discussed in Section 15.6.

Should a rupture occur in the chemical and volume control system outside the containment, or at any point beyond the first check valve or remotely operated isolation valve, actuation of the valve would limit the release of coolant and ensure continued functioning of the normal means of heat dissipation from the core. Even in the event of a failure of the check valve, the high-energy line break evaluation discussed in Section 3.6 demonstrated no loss of safety function. For the general case of rupture outside the containment, the largest source of radioactive fluid subject to release is the contents of the volume control tank. The consequences of such a release are considered in Section 15.7.

9.3.4.4.5.2 Inadvertent Dilution

When the reactor is subcritical, i.e. during MODE 5 (Cold Shutdown) or MODE 3 (Hot Shutdown), MODE 6 (Refueling), and approach to criticality, the relative reactivity status (neutron source multiplication) is continuously monitored and indicated by BF_3 counters and rate indicators. Any appreciable increase in the neutron source multiplication, including that caused by the maximum physical boron dilution rate (see Table 9.3-6), is slow enough to give ample time to start a corrective action (boron dilution stop and/or emergency boron injection) to prevent the core from becoming critical. The maximum dilution rate is based on the abnormal condition of two charging pumps operating at full speed delivering unborated makeup water to the reactor coolant system at a particular time when the boric acid concentration is at the maximum value and the water volume in the system is at a minimum. The worst case conditions for maximum boric acid concentration and minimum system water volume are chosen for the accident analysis for each reactor condition, i.e., MODE 6 (Refueling), cold or MODE 3 (Hot Shutdown), startup, and at power (see Section 15.4.4).

9.3.4.4.5.3 Alternative Methods of Boration

Normally, two of the three charging pumps are used in series with one of the two boric acid transfer pumps. An alternative method of boration would be to use the charging pumps directly from the refueling water storage tank (RWST). A third method would be to depressurize and use the safety injection pumps. There are two sources of borated water available for injection through three diverse methods:

a. The boric acid transfer pumps can deliver the boric acid storage tank contents to the charging pumps.

b. The charging pumps can take suction from the refueling water storage tank (RWST).

c. The safety injection pumps can take suction from the refueling water storage tank (RWST).

The malfunction or failure of one component will not result in the inability to borate the reactor coolant system. An alternate flow path for each of the methods above is available for boration of the reactor coolant.

9.3.4.4.5.4 Inadvertent Dilution of Boric Acid Storage Tanks

To guard against inadvertent dilution of the boric acid solution in the boric acid storage tanks, there is an interlock between the boric acid transfer pumps and the flow control valve FCV-110A that will close the valve when both pumps are not operating. The line between the blender and flow control valve includes a check valve V-355. These features prevent reactor makeup water from flowing back through the blender to the boric acid storage tanks. See Drawing 33013-1266.

9.3.4.4.5.5 Loss of Seal Injection Water

On loss of seal injection water to the reactor coolant pump seals, seal-water flow may be reestablished by manually starting a standby charging pump. Even if the seal-water injection flow is not reestablished, the plant can be operated for a relatively long period of time, such as 24 hours, without evaluation, because the thermal barrier cooler has sufficient capability to cool the reactor coolant flow, which would pass through the thermal barrier cooler and seal leakoff from the pump volute (*Reference 3*).

9.3.4.4.6 Overpressurization Protection

9.3.4.4.6.1 Suction Lines

Overpressurization protection for the chemical and volume control system refers to the system isolation capabilities from the high-pressure reactor coolant system. The chemical and volume control system suction line pressure reduction is provided by the three parallel letdown orifices, each of which is in series with a solenoid-operated valve. Each of these valves is operated from the control room where the valve position is indicated. The letdown orifices reduce the reactor coolant pressure below that of the chemical and volume control system. In addition, a relief valve, downstream of the letdown orifice valves, which has a capacity greater than the combined capacity of the three orifices, is located inside the containment and relieves to the pressurizer relief tank inside the containment.

Under SEP Topic XV-16, RG&E reviewed the radiological consequences of failure of small lines carrying primary coolant outside containment. The worst-case break was taken to be the chemical and volume control system letdown line break, with a break flow, rate of 60 gpm, and the assumption that the flash fraction of fission products contained in the leaked coolant was released. Assuming a previous iodine spike, the primary coolant activity was set at 60 μCi/g Iodine-131 dose equivalent. After a 20-min delay, operator action to isolate the break was assumed, based on available information such as volume control tank level, letdown line flow and pressure, and radiation monitors in the auxiliary building. The conclusion of this review, confirmed by an independent review by the NRC, was that the offsite radiological consequences are 1 rem whole body and 12 rem thyroid, a small fraction of the 10 CFR 100 guidelines.

9.3.4.4.6.2 Discharge Lines

The isolation of the chemical and volume control system discharge line is provided by a common discharge line check valve and a branch check valve in each of the three branches downstream of the common check valve. Drain fittings on the discharge line upstream of each

check valve allow the valves to be tested. The discharge line of the chemical and volume control system is not classified as a low pressure system connected to the reactor coolant system because the piping is 2500-psi-rated piping throughout its length to the positive displacement charging pumps. Ginna Station has not experienced failure of the positive displacement pumps to hold primary system pressure nor is any failure anticipated.

The charging and alternative charging lines were evaluated relative to GDC 55 and 56 requirements under SEP Topic VI-4, Containment Isolation Systems. Each line has a check valve inside containment that is leak tested (CV-370B in the charging line and CV-383B in the alternate charging line). These lines do not have a postaccident function. Acceptance of these lines was based on the following:

a. The piping system is designed to operate at 2250 psi.

b. The piping is Seismic Category I.

c. The charging pumps are positive displacement pumps and, therefore, leakage back through the pumps is expected to be minimal (see also Section 6.2.4.4, Class 3B).

9.3.4.4.7 Galvanic Corrosion

The only types of materials that are in contact with each other in borated water are stainless steels, Inconel, Stellite valve materials, and zircaloy/ZIRLO™ fuel element cladding. These materials have been shown (*Reference 1* and *Reference 2*) to exhibit only an insignificant degree of galvanic corrosion when coupled to each other.

For example, the galvanic corrosion of Inconel versus 304 stainless steel resulting from high temperature tests (575°F) in lithiated boric acid solution was found to be less than -20.9 mg/dm^2 for the test period of 9 days. Further galvanic corrosion would be trivial since the cell currents at the conclusion of the tests were approaching polarization. Zircaloy versus 304 stainless steel was shown to polarize at 180°F lithiated boric acid solution in less than 8 days with a total galvanic attack of -3.0 mg/dm^2. Stellite versus 304 stainless steel was polarized in 7 days at 575°F in lithiated boric acid solution. The total galvanic corrosion for this couple was -0.97 mg/dm^2. These tests show that the effects of galvanic corrosion are insignificant to systems containing borated water.

9.3.4.4.8 Control of Tritium

The chemical and volume control system is used to control the release of tritium introduced into the reactor coolant system from the sources shown in **Figure 9.3-1**. Essentially all of the tritium is in chemical combination with oxygen as a form of water. Therefore, any leakage of coolant to the containment atmosphere carries tritium in the same proportion as it exists in the coolant. Thus, the level of tritium in the containment atmosphere, when it is sealed from outside air ventilation, is a function of tritium level in the reactor coolant, the cooling water temperature at the cooling coils, which determines the dewpoint temperature of the air, and the presence of leakage other than reactor coolant as a source of moisture in the containment air.

There are two major considerations with regard to the presence of tritium:

A. Possible plant personnel hazard during access to the containment.

B. Potential release of tritium to the environment.

Neither of these considerations is limiting at Ginna Station.

The concentration of tritium in the reactor coolant is maintained at a level which precludes personnel hazard during access to the containment. This is achieved by discharging part of the condensate from the boric acid recovery process to the lake via the plant circulating cooling water. The tritium released to the environment in this manner is between 10^{-2} and 10^{-3} of 10 CFR 20 limits.

9.3.4.4.9 Reactor Coolant Activity Concentration Calculations

9.3.4.4.9.1 Computation Method

The reactor coolant activity calculation assumes that the defective fuel rods are uniformly distributed throughout the core and the fission product escape rate coefficients are therefore based upon an average fuel temperature. The fission product activity in the reactor coolant during operation with small cladding defects in 1% of the fuel rods is computed using the following differential equations:

For parent nuclides in the coolant,

$$\frac{dN_{w_i}}{dt} = Dv_j \cdot N_{C_i} - \left(\lambda_i + R_{\eta_i} + \frac{B'}{B_o - tB'}\right) \cdot N_{w_i}$$

(Equation 9.3-1)

for daughter nuclides in the coolant,

$$\frac{dN_{w_j}}{dt} = Dv_j \cdot N_{C_j} - \left(\lambda_j + R_{\eta_i} + \frac{B'}{B_o - tB'}\right) \cdot N_{w_j} + \lambda_i N_{w_i}$$

(Equation 9.3-2)

where:

$N =$	population of nuclide
$D =$	fraction of fuel rods having defective cladding
$R =$	purification flow, coolant system volumes per sec
$B_0 =$	initial boron concentration, ppm
$B' =$	boron concentration reduction rate by feed-and-bleed, ppm per sec
$\eta =$	removal efficiency of purification cycle for nuclide
$\lambda =$	radioactive decay constant

$\nu =$ escape rate coefficient for diffusion into coolant

Subscript C refers to core

Subscript w refers to coolant

Subscript i refers to parent nuclide

Subscript j refers to daughter nuclide

Table 9.3-9 lists the reactor coolant system equilibrium activities for fission products for use in dose and shielding calculations. Table 9.3-10 shows the parameters used in the calculation of the Table 9.3-9 Equilibrium Activities.

9.3.4.4.9.2 Tritium Production

Tritium is produced in the reactor from ternary fission in the fuel, irradiation of boron in the burnable poison rods and irradiation of boron, lithium, and deuterium in the coolant. The parameters used in the calculation of tritium production rate are presented in Table 9.3-11a.

9.3.4.4.9.3 Radioactivity Monitoring

During plant operation, continuous monitoring of the reactor coolant is accomplished by means of a detector assembly mounted at the letdown line. The detector is a Geiger-Mueller tube with a range of 0.01 mR/hr to 10 R/hr. Indication and alarming in the control room of high radiation level requires that the operator immediately determine if the source of additional activity has resulted from failed fuel. The alarm setpoint is 200 mR/hr. A reading of 200 mR/hr corresponds to approximately 0.1% fuel rod cladding defects. Additional activity monitoring instrumentation is provided in the charging pump room.

The charging pump room instrumentation is used primarily for personnel warning. The normal reading is about 20 mR/hr and the alarm setpoint is 100 mR/hr.

9.3.4.4.9.4 Technical Specifications Limits

The Technical Specifications limits on reactor coolant leakage and activity are:

a. A known leakage source of 10 gpm.

b. An unidentified leakage source of 1 gpm.

c. **Primary to secondary leakage of 150 gpd through any one steam generator.**

d.

1. The total specific activity of the reactor coolant shall not exceed $100/\overline{E}$ μCi/gm, where $\overline{E}$ is the average beta and gamma energies per disintegration in MeV.
2. The Iodine-131 equivalent of the iodine activity in the reactor coolant shall not exceed 1.0 μCi/gm.
3. The Iodine-131 equivalent of the iodine activity on the secondary side of a steam generator shall not exceed 0.1 μCi/gm. This limit is required whenever the plant is above MODE 5 (Cold Shutdown).

Basis

The total activity limit for the primary system corresponds to operation with the plant design basis of 1% fuel defects. The limit for secondary iodine activity is conservatively established with respect to the limits on primary system iodine activity and primary-to-secondary leakage.

The specified activity limits provide protection to the public against the potential release of reactor coolant activity to the atmosphere, as demonstrated by the analysis of a steam generator tube rupture accident (see Section 15.6.3).

9.3.4.4.9.5 Tritium Limit

A tritium limit is established to meet the allowable concentration in the circulating water discharge. The production rate of tritium in the fuel is calculated to be 11,910 Ci/cycle and 10% (design) or 2% (expected) is assumed to be released to the coolant by recoil through the cladding (see Table 9.3-11). To this is added tritium from other sources for a total of approximately 1764 Ci/cycle (design) or 810 Ci/cycle (expected) of total tritium activity added to the reactor coolant. With a turnover of two reactor coolant volumes per year, it is anticipated that tritium activity will remain below 3.5 $\mu Ci/cm^3$ for the design release. With a turnover of one reactor coolant volume per year, it is anticipated that tritium activity will remain below 2.5 $\mu Ci/cm^3$ for the expected release. The methodology to determine fuel damage and clad damage based on coolant area radiation activity is provided in a procedure.

9.3.4.4.9.6 R.E. Ginna Normal Operation RCS and Secondary Coolant Sources

Normal Operation Sources

The normal operation source terms are based o the American National Standard (ANS) Source Specification, ANSI/ANS-18.1-1999 (*Reference 6*) entitled, "Radioactive Source Term for Normal Operation of Light Water Reactors." This standard establishes typical long-term concentrations of principal radionucides in fluid streams of light-water-cooled nuclear power plants for use in estimating the expected release of radioactive materials from various effluent streams. These fluid streams are the reactor coolant and the steam generator water and steam.

The purpose of this standard is to provide a uniform approach, applicable to light-water-cooled nuclear power plants, for the determination of expected concentrations in fluid streams. Through application of this standard, a common basis for the determination of radioactive source terms is established with the goal of providing a consistent approach for those involved in the design, licensing, and operation of nuclear power plants.

The numerical values given in the standard are based on available data from operating plants that use Zircaloy-clad, uranium-dioxide fuel. However, the standard stipulates that the values given will be revised periodically as additional plant operating data becomes available.

If the parameters such as power level, flow rates, and fluid quantities are those given in ANSI/ANS-18.1-1999, the source-term values given in the standard are to be used without

modification. In cases where any parameter differs from the values given in ANSI/ANS-18.1-1999, one must account for these differences by using adjustment factors.

The pertinent plant parameters and assumptions are listed in Table 9.3-12 along with normal values specified in ANSI/ANS-18.1-1999. Since several of these quantities differ from the normal values specified in ANSI/ANS-18.1-1999, these values are considered in the determination of the adjustment factors, which are then applied to the standard source term values listed in the standard.

Table 9.3-13 gives the normal source based on ANSI/ANS-18.1-1999 for the R.E. Ginna Plant based on the 1775 MWt uprate power level.

9.3.4.5 Minimum Operating Conditions

The chemical and volume control system provides complete control of the reactor coolant system boron inventory. All three charging pumps are capable of injecting concentrated boric acid directly into the reactor coolant system. The volume of boric acid solution required to meet MODE 5 (Cold Shutdown) requirement shortly after full power operation is specified in the Technical Requirements Manual (TRM). (See also Table 9.3-6.)

The minimum volume from the boric acid storage tanks for the various concentrations allowed to meet MODE 5 (Cold Shutdown) conditions is tabulated in the Technical Requirements Manual (TRM). A range of concentrations from 6000 ppm to 23,000 ppm are allowed. Alternatively, **32,000** gallons of **2750** ppm borated water from the refueling water storage tank (RWST) will meet MODE 5 (Cold Shutdown) conditions. The amount of boric acid will vary from cycle to cycle. The required volume is associated with boration from just critical, hot zero power, peak xenon with control rods at the insertion limit, with single reactor coolant loop operation.

REFERENCES FOR SECTION 9.3

1. D. G. Sammarone, The Galvanic Behavior of Materials in Reactor Coolants, WCAP 1844, August 1961.

2. S. L. Davidson, VANTAGE + Fuel Assembly Reference Core Report, SCAP-12610-P-A, April 1995.

3. Westinghouse Electric Company Nuclear Safety Advisory Letter Number NSAL-99-005, Reactor Coolant Pump Operation During Loss of Seal Injection, dated June 1, 1999.

4. Letter from Robert L. Clark, NRC, to Robert C. Mecredy, RG&E, Subject: Amendment Re: Elimination of Post Accident Sampling System (TAC No. MB3387), dated January 17, 2002.

5. Letter from R. Mecredy, R.G. & E., to A. Johnson, NRC, "Rochester Gas & Electric Corporation, R. E. Ginna Nuclear Power Plant, Docket No. 50-244", Application for Technical Specification Amendment 3.2 and 3.3 to eliminate the use of high concentration boric acid as safety-related source for the safety injection pumps, dated December 17, 1992.

6. American National Standard ANSI/ANS-18.1-1999, "Radioactive Source Term for Normal Operation of Light Water Reactors," approved by the American Nuclear Society Standards Institute, Inc., LaGrange Park, Illinois, September 21, 1999.

Table 9.3-1
NUCLEAR PROCESS SAMPLING SYSTEM CODE REQUIREMENTS

Sample heat exchanger	ASME III, Class C, tube side ASME VIII, shell side
Sample pressure vessels	ASME III, Class C
Piping and valves	USAS B31.1

Table 9.3-2
NUCLEAR PROCESS SAMPLING SYSTEM COMPONENTS

Sample Heat Exchanger(hx)

General	
Number	5
Type	Coil-in-shell
Design heat transfer rate (duty for 652.7°F saturated steam to 127°F liquid), each	2.14×10^5 Btu/hr
Shell	
Design pressure	150 psig
Design temperature	350°F
Component cooling water flow (maximum flow per hx)	40 gpm
Pressure loss at 40 gpm	15 psi
Nominal Component Cooling Water Flow (per hx)	15 gpm
Operating cooling water temperature, in (maximum)	105°F
Operating cooling water temperature, out (maximum)	130°F
Material	Carbon steel
Tubes	
Tube diameter	3/8 in., O.D.
Design pressure	2485 psig
Design temperature	680°F
Sample flow, normal, each	209 lb/hr
Maximum allowable pressure loss, each 209 lb/hr	10 psi
Operating sample temperature, in (maximum)	652.7°F
Operating sample temperature, out (maximum)	127°F
Material	Austenitic stainless steel

Sample Pressure Vessels

Number, total	8
Volume, pressurizer steam sample, two supplied	75 ml
Volume, pressurizer liquid sample, two supplied	75 ml
Volume, reactor coolant hot-leg sample, two supplied	75 ml
Volume, volume control tank sample, two supplied	75 ml

Design pressure	2485 psig
Design temperature	680°F

Table 9.3-3
MALFUNCTION ANALYSIS OF NUCLEAR PROCESS SAMPLING SYSTEM

Sample Chains	*Malfunction*	*Comments and Consequences*
Pressurizer steam space sample, pressurizer liquid space sample, or hot-leg sample	Remote operated sampling valve inside reactor containment fails to close	Diaphragm-operated valve outside the reactor containment closes on containment isolation signal
Any sample chain	Sample line break inside containment	Same as above

Table 9.3-4
POSTACCIDENT SAMPLING SYSTEM FUNCTIONAL REQUIREMENTS

Sample Source[a]	*In-Line Analysis Objective*	*Grab Sample*[b]
Reactor Coolant		
Pressurizer vapor space Pressurizer liquid space Hot leg	Boron, pH, dissolved oxygen, dissolved hydrogen, conductivity[c]	Diluted (1000:1)[d] grab samples (postaccident) Undiluted dissolved gas sample (normal operation (MODES 1 and 2)) Undiluted reactor liquid sample (normal operation (MODES 1 and 2))
Containment		
Sump A	Boron, pH, conductivity[bc]	Diluted (1000:1)[d] sample (postaccident) Undiluted (normal operation (MODES 1 and 2))
Atmosphere	Hydrogen, oxygen	Diluted (1000:1)[d] sample postaccident)

a. Sample must be obtained and analyzed within 3 hrs of the decision to sample.

b. Grab samples to be used for isotopic analysis in the Ginna Station counting room or for offsite analysis.

c. Connections are provided for chloride analysis by a portable instrument. These connections also used for obtaining undiluted samples during routine operation.

d. (1000:1) is a nominal design value. Gas samples diluted at approximately 200:1 or 1500:1.

Table 9.3-5
LIQUID AND GAS SAMPLE PANEL ANALYTICAL EQUIPMENT REQUIREMENTS

Parameter	*Measurement Technique*	*Range*	*Required Accuracy*
LIQUID SAMPLES			
pH	Probe	1-13	±0.1 pH Unit
Conductivity	Probe	0.1-500 μmho/cm	±3%
Dissolved oxygen[a]	Probe	0.01-20 ppm	±10%
Dissolved hydrogen[a]	Gas chromatograph	10-2000 cm^3/kg	±15%
Boron	Automatic titrimeter	50-6000 ppm	±1%
GAS SAMPLES			
Hydrogen	Gas chromatograph	0-10%	±5%
Oxygen	Gas chromatograph	0-30%	±5%

a. Not required for sump samples.

Table 9.3-6
CHEMICAL AND VOLUME CONTROL SYSTEM PERFORMANCE PARAMETERS

Plant design life, years[a]	40
Seal-water supply flow rate, gpm	16
Seal-water return flow rate, gpm	6
Normal letdown flow rate, gpm	40
Maximum letdown flow rate, gpm	60
Normal charging pump flow (one pump), gpm	46
Normal flow to reactor coolant pumps, gpm	16
Normal charging line flow, gpm	30
Maximum rate of boration with one transfer and one charging pump, ppm/min	31
Equivalent cooldown rate to above rate of boration, °F/min	9.4[b]
Maximum rate of boron dilution (two charging pumps), ppm/hr	707[b]
Two-pump rate of boration, using refueling water, ppm/min	6.2[b]
Equivalent cooldown rate to above rate of boration, °F/hr	1.9[b]
Temperature of reactor coolant entering system at full power, °F	544.8/540.2[c]
Temperature of coolant return to reactor coolant system at full power, °F	499.2/497.6[c]
Normal coolant discharge temperature to holdup tanks, °F	127.0
Volume of 2750 ppm borated water from the refueling water storage tank (RWST) required to meet MODE 5 (Cold Shutdown) requirements (gallons)	32,000[d]/**34,000**[e]
Volume of boric acid solution from the boric acid storage tanks required to meet MODE 5 (Cold Shutdown) requirements (gallons)	As required by the Technical Requirements Manual (TRM)

NOTE:—Volumetric flow rates in gpm are based on 127°F and 15 psig. Reactor coolant water quality is summarized in plant procedures.

a. Values listed in the table represent those from the original plant design and may differ from the current plant values due to power uprate.

b. Historic information. Boration capability evaluated on a cycle specific basis as parts of reload report review.

c. Original design/Uprate at T_{AVG} = 576°F.

d. Calculated for Power Uprate. Minor cycle to cycle variations may occur, which are reviewed by cycle specific reload reports.

e. Cycle 34 valve.

Table 9.3-7
PRINCIPAL COMPONENT DATA SUMMARY

HEAT EXCHANGERS	Quantity	Heat Transfer (Btu/hr)	Letdown Flow (lb/hr)	Letdown Δ T (°F)	Design Pressure (psig)	Design Temperature (°F)
					Shell/tube	Shell/tube
Regenerative	1	5.65×10^6	19,760	262	2485/2735	650/650
Nonregenerative	1	7.4×10^6	29,640	244	150/600	250/400
Seal-water	1	1.19×10^6	79,940	16	150/150	250/200
Excess letdown	1	1.88×10^6	4,940	357	150/2485	250/650

PUMPS	Quantity	Type	Capacity (gpm)	Head (ft)	Design Pressure (psig)	Design Temperature (°F)
Charging	3	Positive displacement	60	a	3000	250
Boric acid	2	Canned	40	235	150	250
Recirculation	1	Centrifugal	500	100	75	200
Reactor makeup water	2	Centrifugal	60	235	150	250
Monitor	1	Centrifugal	60	235	150	250
Concentrates holding tank transfer	2	Canned	20	150	150	250
Gas stripper feed	2	Canned	12.5	200	150	200
Gas stripper bottom	2	Canned	12.5	125	75	300

TANKS	Quantity	Type	Volume (Gal)	Design Pressure (psig)	Design Temperature (°F)
Volume control	1	Vertical	1500	75/15 Int/Ext	250
Charging pump pulse dampener	1	Horizontal	NA	3000	250

Boric acid	2	Vertical	4348[b]	Atmosphere	250
Chemical mixing	1	Vertical	3.0	150	200
Batching	1	Jacket bottom	400	Atmosphere	250
Holdup	3	Vertical	4165 ft^3 [c]	15	200
Reactor makeup water	1	Vertical	75,000	Atmosphere	100
Concentrates holding	1		700	Atmosphere	250
Monitor	2	Diaphragm	7500	Atmosphere	125
Hydropad Accumulator	1	Vertical	Gas: 500in^3 Water: 300in^3	500	-325 to 1200
Nitrogen Gas Trap	1	Horizontal	9.75(1.303ft^3)	20	250

DEMINERALIZERS	Quantity	Type	Resin Volume (ft^3)	Flow (gpm)	Design Pressure (psig)	Design Temperature (°F)
Mixed-bed	2	Flushable	12.0	40	200	250
Cation bed	1	Flushable	12.0	40	200	250
Base removal and cation	4	Flushable	12.0	12.5	200	250
Evaporator condensate	2	Fixed/Flushable	12.0	12.5	200	250
Deborating	2	Fixed/Flushable	30.0	40	200	250

a. Head limited by discharge relief valve.

b. Per EWR 3881 calculations.

c. The storage capacity of three of these tanks equals two reactor coolant system volumes.

Table 9.3-8
MALFUNCTION ANALYSIS OF CHEMICAL AND VOLUME CONTROL SYSTEM

Component	*Failure*	*Comments and Consequences*
Letdown line	Rupture in the line inside the reactor containment	The remote air-operated valve (AOV 427) located near the main coolant loop is closed on low pressurizer level or a containment isolation signal. The containment isolation valve in the letdown line (AOV 371) outside the reactor containment is automatically closed by the containment isolation signal initiated by the concurrent loss-of-coolant accident. The closure of AOV 371 and the letdown system orifice valves (AOVs 200A, 200B, and 202, which close on a containment isolation signal fed from AOV 427) limits the leakage of the reactor containment atomosphere outside the reactor containment.
Normal and alternate charging line	Rupture in the line inside the reactor containment (upstream of the check valves)	The check valves located near the main coolant loops (CV 295 and CV 9314, normal charging, and CV 383A, alternate charging) prevent loss of coolant through the line rupture. The air-operated valve located upstream of the check valve (AOV 294, normal charging, AOV 392B, alternate charging) in the defective line can also be closed to isolate the reactor coolant system from the rupture. The check valves located at the boundary of the reactor containment (CV 370B, normal charging at penetration 100; CV 383B, alternate charging at penetration 102) limit the leakage of the reactor containment atmosphere outside the reactor containment.
Seal-water return line	Rupture in the line inside the reactor containment	The motor-operated isolation valve MOV 313 located outside the containment is manually closed or is automatically closed by a containment isolation signal. The closure of that valve limits the leakage of the reactor containment atmosphere outside the reactor containment.

Table 9.3-9
REACTOR COOLANT SYSTEM EQUILIBRIUM ACTIVITIES

Activation Products

Nuclide	µCi/g
Cr-51	5.40E-03
Mn-54	1.60E-03
Mn-56	2.20E-02
Fe-55	2.10E-03
Fe-59	5.10E-04
Co-58	1.40E-02
Co-60	1.30E-03

Non-Volatile Fission Products (Continuous Full Power Operation)

Nuclide	µCi/g	Nuclide	µCi/g	Nuclide	µCi/g	Nuclide	µCi/g
Br-83	1.00E-01	Rb-86	3.76E-02	Mo-99	8.38E-01	Te-132	3.15E-01
Br-84	4.90E-02	Rb-88	4.40E+00	Te-99m	7.78E-01	Te-134	3.15E-02
Br-85	5.70E-03	Rb-89	2.00E-01	Ru-103	6.11E-04	Ba-137m	2.15E+00
I-129	6.86E-08	Sr-89	4.56E-03	Rh-103m	6.14E-04	Ba-140	4.43E-03
I-130	4.41E-02	Sr-90	2.33E-04	Ru-106	2.12E-04	La-140	1.52E-03
I-131	3.05E+00	Sr-91	6.00E-03	Rh-106	2.12E-04	Ce-141	6.80E-04
I-132	2.97E+00	Sr-92	1.32E-03	Ag-110m	1.99E-03	Ce-143	5.41E-04
I-133	4.72E+00	Y-90	6.68E-05	Te-125m	7.75E-04	Pr-143	6.55E-04
I-134	6.49E-01	Y-91m	3.26E-03	Te-127m	3.46E-03	Ce-144	5.14E-04
I-135	2.59E+0	Y-91	6.00E-04	Te-127	1.43E-02	Pr-144	5.14E-04
Cs-134	3.22E+00	Y-92>	1.16E-03	Te-129m	1.17E-02		
Cs-136	3.90E+00	Y-93	3.96E-04	Te-129	1.46E-02		
Cs-137	2.27E+00	Zr-9	6.99E-04	Te-131m	2.68E-02		
Cs-138	1/06E+00	Nb-95	7.03E-04	Te-131	1.40E-02		

Gaseous Fission Products

Nuclide	µCi/g	>Nuclide	µCi/g
Kr-83m	4.74E-01	Xe-133m	3.84E+00
Kr-85m	1.93E+00	Xe-133	2.71E+02
Kr-85	8.21E+00	Xe-135m	5.58E-01

Kr-87	1.24E+00	Xe-135	9.49E+00
Kr-88	3.60E+00	Xe-137	1.91E-01
Kr-89	1.00E-01	Xe-138	6.92E-01
Xe-131m	3.54E+00		

Table 9.3-10
PARAMETERS USED IN THE 1811 MWT UPRATE CALCULATION OF REACTOR COOLANT FISSION PRODUCT ACTIVITIES

1.	Core thermal power, MWt	1811
2.	Cycle Length (days)	575.5
3.	Initial Boron Concentration (ppm)	1967
4.	Fuel Defect Level (%)	1
5.	Reactor Coolant Mass (g)	1.123×10^{8}
6.	Purification System Flow Rate (gpm)	40
7.	Purification System Flow Temperature (°F)	127
8.	Purification System Flow Pressure (psig)	15
9.	Purification System Demineralizer Resin Volume (ft^3	12
10.	Volume Control Tank Volumes	
	Vapor, ft^3	100
	Liquid, ft^3	100
11.	Volume Control Tank Temperature (°F)	127
12.	Volume Control Tank Vapor Purge Rate (cfm)	0
13.	Fission Product Escape Rate Coefficients	
	Noble gas isotopes, sec^{-1}	6.5×10^{-8}
	Br, Rb, I and Cs isotopes (sec^{-1})	1.3×10^{-8}
	Te isotopes, sec^{-1}	1.0×10^{-9}
	Mo, Tc and Ag isotopes, sec^{-1}	2.0×10^{-9}
	Sr and Ba isotopes, sec^{-1}	1.0×10^{-11}
	Y, Zr, Nb, Ru, Rh, La, Ce and Pr (sec^{-1})	1.6×10^{-12}
14.	Mixed-bed demineralizer decontamination factors	
	Noble gases and Cs-134, Cs-136 and Cs-137	1
	All other isotopes	10
15.	Cation Bed Demineralizer Decontamination Factor for Cs-134, Cs-137 and Rb-86	10

Table 9.3-11a
PARAMETERS USED IN THE ORIGINAL CALCULATION OF TRITIUM PRODUCTION IN THE REACTOR COOLANT - BASIC ASSUMPTIONS

Plant Parameters:

1.	Core thermal power, MWt	1811
2.	Coolant water volume, ft^3	5441[a]
3.	Core water volume, ft^3	354
4.	Core water mass (grams)	7.324 E+06
5.	Plant full power operating time	
	• Equilibrium cycle	82.2 weeks (18.9 months)
6.	Boron concentrations (Peak hot full power equilibrium Xenon)	
	• Equilibrium cycle, ppm	1693
7.	Burnable poison boron content (total-all rods), kg	3.0
8.	Fraction of tritium in core (ternary fission + burnable boron) diffusing through clad	
	• Equilibrium (design)>	0.10
	• Equilibrium (expected)	0.02
9.	>Ternary fission yield	8×10^{-5}atoms/fission

a. Minimum value based on PCWG parameters for Cases 3 and 4 with 10% tube plugging and 35% pressurizer water level.

Table 9.3-11b
CALCULATION OF TRITIUM PRODUCTION IN THE REACTOR COOLANT

Calculations	***Equilibrium Cycle Design Value (Ci/cycle)***	***Equilibrium Cycle Expected Value (Ci/cycle)***
Tritium from core		
1. Ternary fission	10400	10400
2. ^{10}B (n, 2α) T (in poison rods)	220	220
3. ^{10}B (n, α) ^{7}Li (n, nα) T (in poison rods)	1290<	1290
4. Release fraction	0.10	0.02
5. Total released to coolant	1191	238
Tritium from coolant		
1. ^{10}B (n, 2α) T	445	445
2. Li (n, nα) T (limit 2.2 ppm Li)	16	16
3. ^{6}Li (n, α) (purity of ^{7}Li = 99.9%)	106	106
4. D2 (n,y)	2	2
5. Release fraction	1.0>	1.0
6. Total release to coolant	569	569
Total tritium in coolant	1760	806

Table 9.3-12
ANSI/ANS 18.1-1999 NORMAL SOURCE INPUT PARAMETERS

Parameter	Symbol	Value	Units	Nominal Value	
Core Thermal Power	P	1.811E+03[a]	MWt	3.4E+03	MWt
Weight of water in reactor coolant system	WP	4.07E+04	gal	2.5E+05	kg
Reactor coolant letdown flow rate (purification)	FD*	4.00E+04	gal	4.7E+00	kg/sec
Reactor coolant letdown flow rate (yearly average for boron control)	FB	1.66E-01	gpm	6.3E-02	kg/sec
Flow through the purification system cation demineralizer	FA	4.00E+00	gpm	4.7E-01	kg/sec
Steam flow rate	FS	7.41E+06	lb/hr	1.9E+03	kg/sec
Weight of secondary side water in all steam generators<	WS	1.67E+05	lb	2.0E+05	kg
Steam generator blowdown flow rate (total)	FBD	1.00E+02	gpm	9.5E+00	kg/sec
Density of RCS Water	Drcs	4.48E+01	lb/ft^3		
VCT Liquid Volume	VOL-L*	1.00E+02	ft^3		
VCT Vapor Space Volume	VOL-V*	1.00E+02	ft^3		
VCT Purge Rate	PR*	0.00E+00	scfm		
Density of VCT Water	Dvct*	6.16E+01	lb/ft^3		
VCT Temperature	TEMP*	1.27E+02	deg F		
VCT Vapor Pressure	PRESS	1.50E+01	psig		

Notes: Values for NB, NA, NBD, NC, NS and NX are N-18.1 values. Symbols marked with (*) are used in noble gas stripping factor calculations (Y).

a. 102% of 1775 MWt

Table 9.3-12
ANSI/ANS 18.1-1999 NORMAL SOURCE INPUT PARAMETERS

Nuclide	RCS	Secondary Side Water	Secondary Side Steam	Nuclide	RCS	Secondary Side Water	Secondary Side Steam
Class 1				**Class 6**			
Kr-85m	1.5E-02	>nil	6.5E-09	Na-24	5.0E-02	2.6E-06	1.3E-08
Kr-85	1.3E+00	>nil	5.6E-07	Cr-51	3.0E-03	1.9E-07	9.2E-10
Kr-87	1.8E-02	>nil	2.2E-08	Mn-54	1.5E-03	9.5E-08	4.8E-10
Kr-88	1.8E-02	nil	7.7E-09	Fe-55	1.2E-03	7.2E-08	3.6E-10
Xe-131m	7.7E-01	nil	3.2E-07	Fe-59	2.9E-04	1.8E-08	8.9E-11
Xe-133m	6.3E-02	nil	2.8E-08>	Co-58	4.5E-03	2.8E-07	1.4E-09
Xe-133	2.7E-02	nil	1.2E-08	Co-60	5.1E-04	3.2E-08	1.6E-10
Xe-135m	1.5E-01	nil	6.4E-08	Zn-65	4.9E-04	3.1E-08>	1.5E-10
Xe-135	6.2E-02	nil	2.6E-08	Sr-89	1.4E-04	8.3E-09	4.2E-11
Xe-137	4.1E-02	nil	1.7E-07	Sr-90	1.2E-10	7.2E-10	3.6E-12
Xe-138	7.2E-02	nil	3.1E-08	Sr-91	1.0E-03	5.2E-08	2.6E-10
				Y-91m	5.4E-04	8.9E-09	4.4E-11
				Y-91	5.0E-06	3.1E-10	1.6E-12
Class 2							
Br-84	1.9E-02	2.2E-07	2.2E-09	Y-93	4.5E-03	2.2E-08	1.1E-09
I-131	2.0E-03	1.3E-07	1.3E-09	Zr-95	3.8E-04	2.3E-08	1.2E-10
I-132	7.0E-02	2.2E-06	2.2E-08	Nb-95	2.7E-04	1.6E-08	8.4E-11
I-133	2.8E-02	1.6E-06	1.6E-08	Mo-99	6.4E-03	3.8E-07	1.8E-09
I-134	1.2E-01	2.0E-06	2.0E-08	e-99m	5.2E-03	2.2E-07	1.2E-09
I-135	6.2E-02	2.8E-06	2.8E-08	Ru-103	7.3E-03	4.5E-07	2.3E-09

Nuclide	RCS	Secondary Side Water	Secondary Side Steam
Class 1			
Class 3			
Rb-88	2.3E-01	1.6E-06	7.8E-09
Cs-134	3.6E-05	2.2E-09	1.2E-11
Cs-136	8.5E-08	5.3E-08	2.7E-10
Cs-137	5.1E-05	3.3E-09	1.6E-11
Class 4			
N-16	4.0E+01	2.6E-06	2.6E-07
Class 5		<	
H-3	1.0E+00	1.0E-03	1.0E-03>

Nuclide	RCS	Secondary Side Water	Secondary Side Steam
Class 6			
Ru-106	8.7E-02	5.4E-06	2.6E-08
Ag-110m	1.3E-03	7.7E-08	3.9E-10
Te-129m	1.8E-04	1.1E-08	5.7E-11
Te-129	2.8E-02	5.9E-07	2.9E-09
Te-131m	1.5E-03	8.7E-08	4.4E-10
Te-131	9.2E-03	8.5E-08	4.4E-10
Te-132>	1.7E-03	1.0E-07	5.0E-10
Ba-140	1.3E-02	7.7E-07	3.8E-09
La-140	2.5E-02	1.5E-06	7.3E-09
Ce-141	1.5E-04	8.9E-09	4.5E-11
Ce-143	2.8E-03	1.6E-07	8.2E-10
Ce-144	3.9E-03	2.3E-07	1.2E-09
W-187	2.6E-03	1.4E-07	7.3E-10
Np-239	2.2E-03	1.3E-07	6.5E-10

Figure 9.3-1 Maximum Tritium Activity Released to Primary Coolant

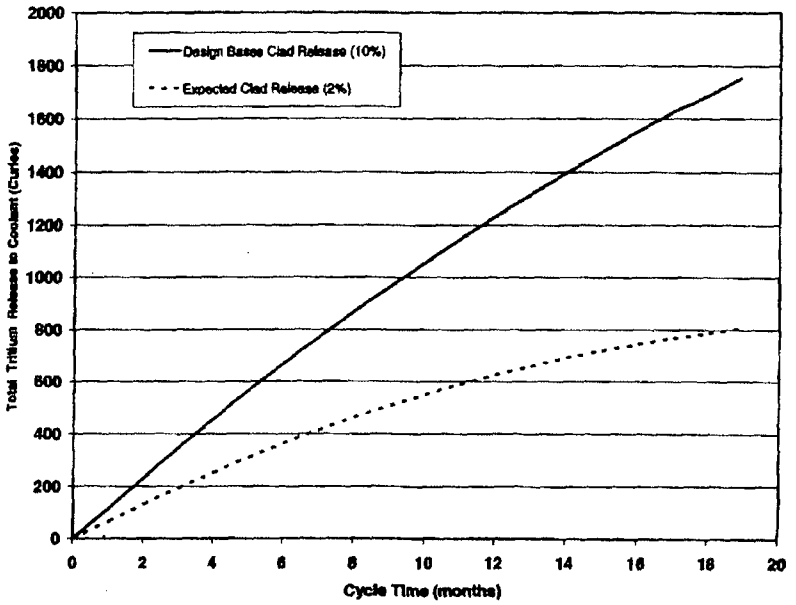

R.E. GINNA NUCLEAR POWER PLANT UPDATED FINAL SAFETY ANALYSIS REPORT
Figure 9.3-1 *Maximum Tritium Activity Released to the Coolant*

9.4 AIR CONDITIONING, HEATING, COOLING, AND VENTILATION SYSTEMS

9.4.1 CONTAINMENT VENTILATION SYSTEM

9.4.1.1 Design Bases

9.4.1.1.1 Design Objectives

The containment ventilation systems are designed to accomplish the following:

A. Remove the normal heat loss from the equipment and piping in the reactor containment during plant operation and maintain a normal ambient temperature of about 120°F, 50% relative humidity.

B. Provide sufficient air circulation and filtering throughout all containment areas to permit safe and continuous access to the reactor containment within 2 hours after reactor shutdown, assuming defects exist in 1% of the fuel rods.

C. Provide for positive circulation of air across the refueling water surface to ensure personnel access and safety during shutdown.

D. Provide a minimum containment ambient temperature of 50°F during reactor shutdown.

E. Provide for purging of the containment to the plant vent for dispersion to the environment as allowed by applicable regulations.

F. Provide for backup purging of the containment following an accident. The design for post-accident conditions and operating criteria are described in Section 6.2.2.

In order to accomplish these objectives the following systems are provided:

AA. Containment recirculation cooling and filtration system.

BB. Control rod drive mechanism cooling system.

CC. Reactor compartment cooling system.

DD. Refueling water surface and purge system.

EE. Containment auxiliary charcoal filter system.

FF. Containment post-accident charcoal filter system.

GG. Containment shutdown purge system.

HH. Containment mini-purge system.

II. Penetration cooling system.

The design characteristics of the equipment required in the containment for cooling, filtration, and heating to handle the normal thermal and air cleaning loads during MODES 1 and 2 are presented in Table 9.4-1. In certain cases where engineered safety features functions also are served by the equipment, component sizing is determined from the required operating specifications associated with the design-basis accident, described in Sections 6.3 and 15.6.

9.4.1.1.2 Design Criteria

The design criteria below, associated with inspection and testing of the air cleanup system, were used during the licensing of Ginna Station. They represent the Atomic Industrial Forum version of proposed criteria (AIF-GDC) issued by the AEC for comment on July 10, 1967. Conformance of the ventilation systems to the General Design Criteria of 10 CFR 50, Appendix A (i.e., GDC 2, 4, 5, 17, 19, 60, and 61) is discussed in Section 3.1.2. Conformance with Regulatory Guides and IEEE Standards is discussed in Section 1.8.

Inspection of Air Cleanup Systems

CRITERION: Design provisions shall be made, to the extent practical, to facilitate physical inspection of all critical parts of containment air cleanup systems, such as ducts, filters, fans, and dampers (AIF-GDC 62).

Access is available for visual inspection of the fan cooler and recirculation filtration systems and components.

Testing of Air Cleanup System Components

CRITERION: Design provisions shall be made, to the extent practical, so that active components of the air cleanup systems, such as fans and dampers, can be tested periodically for operability and required functional performance (AIF-GDC 63).

Periodic tests of the dampers associated with the charcoal filter units of the containment air cleanup system are conducted. Each damper is started and operation (including stroke time) is checked by personnel in containment. An indicating light in the control room provides indication of damper movement. Periodic tests also verify that the dampers fail in a safe position on loss of air and that air flow and orientation for accident operation is acceptable.

Testing Air Cleanup Systems

CRITERION: A capability shall be provided, to the extent practical, for in situ periodic testing and surveillance of the air cleanup systems to ensure (a) filter bypass paths have not developed and (b) filter and trapping materials have not deteriorated beyond acceptable limits (AIF-GDC 64).

Each containment recirculation fan unit is checked periodically for water in the filtration area. Also, charcoal filters are tested for bypass flow and pressure drop and are visually inspected for damage and loss of charcoal.

Further, a representative sample cell is removed during shutdown and tested periodically to verify its continued efficiency. After reinstallation, the filter units will be tested in-place by aerosol injection to determine integrity of the flow path.

Initial Testing of Operational Sequence of Air Cleanup Systems

CRITERION: A capability shall be provided to test initially under conditions as close to design as practical the full operational sequence that would bring the air cleanup

systems into action, including the transfer to alternate power sources and the design air flow delivery capability (AIF-GDC 65).

Means were provided to test initially under conditions as close to design and as near as was practical the full operational sequence that would bring the fan cooler and recirculation filtration systems into action, including transfer to the emergency diesel-generator power source.

9.4.1.2 System Design

9.4.1.2.1 Introduction

The containment ventilation, purging, and recirculation cooling and filtration systems flow diagram is shown in Drawings 33013-1863 through 33013-1866. The containment recirculation cooling and filtration system and the purge and depressurization system are designed as Seismic Category I.

The containment recirculation fans and reactor compartment fans are direct-driven units, each with standby units for redundancy. Control rod drive fans were sized to provide adequate cooling with one fan operation. However, standard practice is two fan operation. The fans and motors of these units are provided with vibration detecting devices to detect abnormal operating conditions in the early stages of the disturbance. Each of the associated systems is provided with flow switches to verify existence of air flow in the associated duct system. Dampers in the following systems and ducts are provided with air by dual supply air mains: primary compartment ducts, dome ducts, containment auxiliary charcoal filter systems, butterfly valves which isolate the post-accident charcoal filters, and containment purge supply and exhaust ducts.

9.4.1.2.2 Containment Recirculation Cooling and Filtration System

The containment recirculation fan cooler (CRFC) function during MODES 1 and 2 is accomplished using the air handling units with common, headered discharge ducting to ensure adequate distribution of filtered and cooled air throughout the containment (see Drawing 33013-1863). The cooling capacity and air flow rates of the units are discussed in Section 6.2.2.1. Condensate collected from the units is discussed in Section 5.2.5.4.3.

Each air handling unit consists of the following equipment arranged so that during MODES 1 and 2, air flows through the assembly in the following sequence: entering louvers, cooling coils, moisture separators (demisters), high efficiency particulate air filters, direct-drive motor and centrifugal fan, and supply header.

In the event of a loss-of-coolant accident, the sequence of flow would be as above but in addition, for two of the units, after passing through the fan the flow would be directed through an alternative post-accident path containing charcoal filters and then through gratings discharging onto the operating floor area of containment.

During MODES 1 and 2, the charcoal filters are isolated from air flow on both the upstream and downstream sides by butterfly valves. These valves are automatically opened by the accident signal, which also closes a similar valve to block the normal discharge path from the

fan. The isolation of the charcoal under normal conditions maintains a high degree of charcoal activation.

The containment recirculation fan cooler (CRFC) units are located in the space between the reactor coolant loop shield wall and the containment wall. The shielded location makes inspection of the equipment possible at power under restricted area access conditions and immediately after entry into MODE 3 (Hot Shutdown).

The fans, motors, electrical connections, and all other equipment in the containment necessary for operation of the system are capable of operating under the environmental conditions following a loss-of-coolant accident.

Two of the four fans and coolers plus one containment spray pump (i.e. one train of each system) are required to provide sufficient capacity to maintain the containment pressure within design limits after a loss-of-coolant accident or steam line break accident. See Section 6.2.2 for a discussion of the post-accident performance of these systems.

During power operation, containment integrity is maintained with no release from the containment ventilation system to the atmosphere except as described in Section 12.3.2.2.7 and as required to maintain containment pressure within the requirements of Technical Specifications. Prior to purging the containment air using the containment mini-purge system, particulate and radiogas monitor indications of the closed containment activity levels are used to guide releases from the containment. During power operation, the containment particulate and radiogas monitor (R-11 and R-12) indications help determine the desirability of using either one or both of two auxiliary particulate and charcoal filter units installed in the containment primarily for pre-access cleanup.

When containment purging for access is in progress, releases from the plant vent are continuously monitored with a radiogas monitor.

9.4.1.2.3 Control Rod Drive Mechanism Cooling System

The control rod drive cooling system consists of fans and ductwork to draw air through the control rod drive mechanism shroud and eject it to the main containment volume (see Drawing 33013-1864). *Reference 10* provided upgraded ductwork for the control rod drive mechanism (CRDM) cooling system.

The purpose of the control rod shroud fans is to remove the heat generated by the control rod drive mechanism coils. This heat is dissipated from the reactor vessel through the shroud surrounding the control rod drive mechanism coils. The two fans take a suction from the shroud and discharge to the containment atmosphere above their missile barrier location. The fan motors are 60 hp, and each fan is rated for 14,000 cfm air flow. Backdraft dampers prevent reverse air flow through the fans.

A new Head Assembly Upgrade Package (HAUP) was provided by PCR 2001-0042 during the 2003 refueling outage.

The HAUP provided a shroud and shield assembly with retractable doors as shown in *Reference 11*. The HAUP provided a duct system for the control rod drive mechanism cooling air flow and also provides radiation shielding in the lower portion of the assembly.

The shroud assembly attaches to the existing lift rig circular ring beam lower face in order to form part of the ductwork for the control rod drive mechanism cooling. A plenum with access doors for the control rod drive mechanism and microprocessor rod position indication (MRPI) coil connectors has been added to the top of the existing lift rig to complete the cooling air flow path. The plenum attaches to existing duct work on the missile shield via a two piece removable duct section.

9.4.1.2.4 Reactor Compartment Cooling System

The reactor compartment cooling system consists of a plenum, cooling coils, fans, and ductwork arranged to supply cool air to the annulus between the reactor vessel and the primary shield and to the nuclear instrumentation external to the reactor (see Drawing 33013-1864).

These fans take a suction from the containment atmosphere and cool the air with service water (SW) through cooling coils before discharging through supply dampers to the area near containment sump A (directly under the reactor vessel). Air exits to the containment atmosphere around the loop nozzles and vessel seal ring area.

Each fan has a 30-hp motor rated for 21,175-cfm air flow. The cooling coils are supplied by service water (SW) through two normally open butterfly isolation valves which are located outside containment. The total cooling capacity is 342,000 Btu/hr for each unit, based on 80°F service water (SW) temperature and 120°F air inlet temperature. As discussed in *Reference 9*, the increase in the maximum lake temperature to 85°F does not prevent the reactor compartment cooling system from providing adequate cooling since a review of past plant instrumentation records during summer operation indicates that the air temperature exiting the reactor vessel annulus is maintained well below the design basis temperature.

Counterweighted manual backdraft dampers prevent reverse air flow through the fans.

9.4.1.2.5 Refueling Water Surface and Purge System

The purpose of this subsystem is to supply air to the surface of the refueling cavity and exhaust from the area above the refueling manipulator crane to protect the operators during MODE 6 (Refueling) operations. The system consists of a supply fan (3 hp, 6900 cfm) and an exhaust fan (7.5 hp, 11,000 cfm) located near the refueling cavity in containment. The flow path requires that the supply fan blow air over the surface of the refueling cavity where an exhaust fan removes the air and delivers it to the purge exhaust system. The fans are controlled from within the containment during MODE 6 (Refueling) operations. (See Drawing 33013-1864.)

9.4.1.2.6 Containment Auxiliary Charcoal Filter System

The purpose of this subsystem is to absorb radioactive iodine vapor and radioactive particles that may occur as a result of normal primary system leakage inside the containment. These fans are used during MODES 1 and 2 prior to containment entries and when containment

radioactivity levels are high. The system consists of two fans and filter plenums. Each fan is rated at 5 hp and 5100 cfm. Each filter unit has six high efficiency particulate air filter cells rated at 6000 cfm and 16 charcoal filter cells rated at 5280 cfm. The air flow path is from the fan suction through a discharge damper and plenum entry damper (both air-operated) to the filter plenum and exhausts above the refueling cavity area. The fan discharge and plenum entry dampers are interlocked to open fully when the fan is started and to close when the fan is stopped. (See Drawing 33013-1864.)

9.4.1.2.7 Containment Post-accident Charcoal Filter System

Two of the containment air handling units have their air discharge routed automatically during an accident condition through charcoal filters before being discharged onto the operating floor area of containment. These post-accident charcoal filters are designed to remove iodine and/or radioactive particulates following an accident. The inlet valves to the filter plenums are air-operated, spring-loaded butterfly valves with control solenoids. Upon a loss of control signal or power, the valves are spring-loaded to open directing air through the filters as air pressure bleeds off. Each charcoal filter bank has 120 cells originally rated at 38,000 cfm. (See Section 6.5.1.2.1 for the latest rating figures.)

Each charcoal filter plenum also includes a dousing system (part of the containment spray discussed in Sections 6.2.2.2 and 6.5.1.2).

9.4.1.2.8 Containment Shutdown Purge System

The containment shutdown purge system is independent of the main auxiliary building exhaust system and includes provisions for both supply and exhaust air. The supply system includes an outside air connection to roughing filters, heating coils, fans, duct system, and supply penetration with a butterfly valve outside containment and a blind flange inside containment. The exhaust system includes an exhaust penetration with a butterfly valve and a blind flange identical to those above, a duct system, a filter bank with high efficiency particulate air and charcoal filters, fans, and a building exhaust vent. The charcoal filters are of the same type as those used in the post-accident system (Section 9.4.1.2.7). Both supply and exhaust systems include two fans with isolating dampers so that purging can be performed using one supply and exhaust fan or both supply and exhaust fans. Minimum design flow for operation using one supply and exhaust fan is 10,000 cfm assuming clean filters. (See Drawings 33013-1865 and 33013-1866.)

The shutdown purge supply and exhaust duct blind flanges inside the containment are closed during MODES 1, 2, 3 and 4. The blind flanges are equipped with double O-ring seals. Leakage can be checked periodically by pressurizing the duct between the blind flanges and butterfly valves outside containment. The outboard valves are designed for rapid automatic closing by a containment isolation signal or upon a signal of high activity level within the containment ventilation system. The blind flanges can only be removed during cold and MODE 6 (Refueling) shutdowns. The flanges and associated double seals provide containment isolation and are a containment boundary for MODES 1, 2, 3 and 4. During cold and MODE 6 (Refueling) shutdown, when the flanges are removed, closure of the containment penetration is provided by the butterfly valves outside the containment. See also Section 6.2.4.4.9.

The steam heating system is part of the containment purge system. It heats inlet air if outside temperatures are excessively low. System preheaters and two reheaters are supplied with 100-psig steam through a flow control valve which is thermostatically controlled. Steam pressure is normally reduced to 2 psig. Each reheater is rated at 94,600 Btu/hr and drains to the intermediate building floor drains. The heater coils will automatically receive steam when outside air supply temperature falls below 50°F.

9.4.1.2.9 Containment Mini-Purge System

The containment mini-purge system is capable of purging containment during MODES 1 and 2 at a relatively low flow rate (approximately 1500 cfm). The exhaust is through a 6-in. line to the auxiliary building charcoal filters. See Drawing 33013-1870. The exhaust line has an automatic air-operated butterfly isolation valve inside and outside containment. The supply system includes a 2000-cfm rated blower for supplying ambient air from inside of the intermediate building through a 6-in. line penetrating containment with air-operated, butterfly type, automatic inboard and outboard isolation valves. (See Drawing 33013-1865.) The supply and exhaust system isolation valves are capable of closing fully against 60 psig in a maximum of 2 sec after receiving an isolation signal. Operation of the mini-purge system is remote manual from the control room. It is intermittent and may be started, operated, and secured during all normal modes of plant operation. The containment isolation valves are quality Group B, Seismic Category I. Their control circuitry is Class 1E, Seismic Category I. (See also Section 6.2.4.4.)

The mini-purge system is connected to the plant vent. The system is automatically isolated on high radiation in containment. To ensure the containment sample monitored by the radiation detectors (R-11 and R-12) is representative of the containment atmosphere, at least one recirculation fan is required to be in operation during mini-purge operation.

9.4.1.2.10 Penetration Cooling System

Two penetration cooling fans are provided to cool hot mechanical penetrations. Each fan is powered from a separate motor control center. One cooling coil serviced from the service water (SW) system provides the heat sink. (See Drawing 33013-1866.) The inlet air ductwork to the fans draws outside air from the auxiliary building roof. The ductwork includes a backflow preventer to minimize the potential of an unmonitored radioactive discharge from the auxiliary building to the outside. The ductwork also includes a steam heating coil with a temperature control system that keeps the air temperature at the discharge of the containment penetration cooling fans, upstream of the cooling coil, in the range of 60°F to 65°F.

The containment penetration cooling system is designed to prevent the bulk concrete temperature surrounding the penetrations from exceeding 150°F.

9.4.2 AUXILIARY BUILDING VENTILATION SYSTEM

9.4.2.1 Design Basis

The auxiliary building ventilation system (ABVS) is designed to meet the following principal criteria:

A. Ensure adequate heat removal from equipment rooms and open areas such that ambient temperature limits are not exceeded. Conservatively estimated design parameters, dictated by the requirements for engineered safety features operation and by good engineering practice, were used to establish ambient temperature limits. An evaluation of heat loads and temperatures in the auxiliary building following a loss of offsite power was conducted as part of the RG&E environmental qualification program. It was shown that required ambient conditions were not exceeded even with the minimum complement of ventilation equipment available (*Reference 1*).

B. Control the direction of flow of airborne radioactivity from areas of low activity toward areas of higher activity.

9.4.2.2 System Design and Operation

9.4.2.2.1 System Design Objective

The auxiliary building ventilation system (ABVS) provides clean, filtered, and tempered air to the operating floor of the auxiliary building and to the surface of the decontamination pit and spent fuel pool (SFP). The system exhausts air from the equipment rooms and open areas of the auxiliary and intermediate buildings, the decontamination pit area, and spent fuel pool (SFP) area through a closed exhaust system. The exhaust system includes a 100% capacity bank of high efficiency particulate air filters and redundant 100% capacity fans discharging to the atmosphere via the plant vent. This arrangement ensures the proper direction of air flow for removal of airborne radioactivity from the auxiliary building. **The auxiliary building main exhaust fans have inlet flow control dampers that modulate automatically to maintain an acceptable negative pressure at the fan's suction header. On receipt of a high radiation alarm, the auxiliary building supply fans and all exhaust fans of the system are tripped except those exhausting to the plant vent through the charcoal filters.**

The auxiliary building ventilation system (ABVS) is included in Drawings 33013-1869 through 33013-1872.

9.4.2.2.2 Charcoal Filter Circuit

A separate charcoal filter circuit is included in the auxiliary building exhaust system which exhausts from rooms where fission product activity may accumulate during MODES 1 and 2 in concentrations exceeding the average levels expected in the rest of the building. Following a loss-of-coolant accident, this filter circuit is capable of providing exhaust ventilation from the areas containing pumps and related piping and valving which are used to recirculate containment sump liquid.

A full-flow charcoal filter bank is provided in the circuit, along with two 50%-capacity exhaust fans. The air-operated suction and discharge dampers associated with each fan are interlocked with the fan such that they are fully open when the fan is operating and fully closed when the fan is stopped. These dampers fail to the open position on loss of control signal or control air. Each fan is connected to a separate emergency power bus, but both fans can be operated from the same bus after passage of the peak post-accident diesel loading.

The charcoal filter fans discharge through the 1G exhaust fan to the main auxiliary building exhaust system containing the high efficiency particulate air filter bank. A fail open damper is installed in a bypass circuit around the two main exhaust fans to ensure a path for the charcoal and high efficiency particulate air filtered exhaust to the plant vent if the main exhaust fans are not operating.

9.4.2.2.3 System Operation

The auxiliary building ventilation system (ABVS) provides a minimum of six air exchanges per hour for each of the rooms and open areas of the building; this ensures adequate heat removal from most operating equipment. However, a total of seven separate cooling units are provided for safety-related pumps. Two redundant cooling units each are provided for both the charging pump room and the residual heat removal pump pit. Three cooling units are provided for the safety injection and containment spray pumps, headered into a common set of ductwork. The coils for the safety injection and containment spray pumps have been blanked off such that the associated fans are operable but the air is no longer cooled by service water (SW). One unit is powered from bus 14, one from bus 16, and one has a swing unit design during automatic fan operation mode that is not used. This unit is preferentially loaded from a bus 16 source, with a bus 14 source (breaker) available through manual transfer. The cooling units are operated whenever any of the associated pumps are in service and are designed with separation of cooling water and electrical services, and provision for operation on emergency power. These cooling units consist basically of a fan, a water-cooled heat exchanger and ductwork for circulating cooled air to the residual heat removal and charging pump rooms, and to an area near the safety injection and containment spray pump motors. The cooling units are designed and installed in accordance with Seismic Category I criteria. However, since at least one charging pump is run intermittently/continuously for normal plant operation, a charging pump cooling unit may be run intermittently/continuously to cool the pump motor(s) to extend equipment life. Charging pumps are not required to survive a harsh environment. Also, each cooling unit is sufficient to maintain acceptable room temperatures with the minimum number of charging pumps required for system operation in service. The remaining five room coolers are not required for the operation of their associated pump motors even with both trains of engineered safety features operating (*Reference 2*).

Ventilation for the decontamination pit area and spent fuel pool (SFP) area is provided by the main auxiliary building supply and exhaust system (see Section 9.4.4). Operation of these systems would be interrupted by a loss of normal power supplies, as the main supply and exhaust fans are not vital to operation of engineered safety features equipment and are not among the loads operable from the emergency diesel power supplies. However, a reduced quantity of air is circulated and exhausted by redundant fans in separate exhaust paths, bypassing the main exhaust fans via the auxiliary building exhaust fan bypass damper. The main auxiliary building exhaust fans can be returned to service upon restoration of the normal power supplies.

9.4.2.3 System Components

9.4.2.3.1 Auxiliary Building Air Handling Unit

The air handling unit consists of an outside air inlet, damper, roughing filters, heating coils, discharge heating coils, and dampers. Associated with the unit, one supply fan 1A supplies air to the new fuel area, general operating floor area, drumming station, and general area. Supply fan 1B supplies air to the spent fuel pool (SFP) area and the decontamination pit (see Drawing 33013-1872).

9.4.2.3.2 Auxiliary Building Exhaust Fan 1C

Exhaust fan 1C draws air from the spent fuel pool (SFP) and decontamination pit areas and discharges through a damper to the plant discharge header (see Drawing 33013-1871).

9.4.2.3.3 Auxiliary Building Exhaust Fans 1A and 1B

Auxiliary building exhaust fans 1A and 1B are the main fans and each has a 100% capacity (see Drawing 33013-1871). The fans discharge to the plant vent stack. Air flows through the high efficiency particulate air filter, pressure alarms, minimum static pressure controller, dampers, exhaust fans, and bypass damper. A fail open bypass damper is installed around the main exhaust fans to ensure a path for charcoal filtered exhaust to the plant vent if main exhaust fans 1A and 1B are not operating. This bypass damper opens if no exhaust fans are operating in order to start an auxiliary building charcoal filter fan. Dampers on the auxiliary building exhaust fans are interlocked with the fan starting circuit.

9.4.2.3.4 Auxiliary Building Exhaust Fan 1G

Exhaust fan 1G takes suction from the following areas and discharges through high efficiency particulate air and charcoal filters to the plant discharge header (see Drawing 33013-1870):

A. General intermediate floor area.

B. Gas stripper.

C. Waste gas compressor.

D. Holdup tank rooms.

E. Spent fuel pool (SFP) filter area.

F. Evaporator areas.

G. Basement floor area.

H. Spent resin storage tank.

I. Chemical holdup tank.

J. Containment spray pump area.

K. Nonregenerative heat exchanger area.

L. Seal-water heat exchanger area.

M. Demineralizer and ion exchanger areas.

The charcoal filter associated with auxiliary building exhaust fan 1G is protected by an automatic fire suppression system.

9.4.2.3.5 Auxiliary Building Charcoal Filter Fans 1A and 1B

Charcoal filter fans 1A and 1B include the charcoal filter bank and suction and discharge dampers (interlock) (see Drawing 33013-1870). A low-flow alarm is associated with the fans. The fans are each 50% capacity and take a suction from the following areas:

A. Leakoff collection tank.

B. Residual heat removal pump pit.

C. Residual heat removal heat exchanger pit.

D. Gas decay tank rooms.

E. Waste evaporator vent and air ejector discharge (system physically removed in 1999).

F. Boric acid evaporator air ejector discharge.

G. Charging pump rooms.

H. Concentrates holdup tank and pump rooms.

I. Volume control tank and reactor coolant filter area.

J. Containment mini-purge exhaust.

9.4.2.3.6 Penetration Cooling Fans 1A and 1B

Penetration cooling fans 1A and 1B supply intermediate and auxiliary building penetrations through a cooling coil (see Drawing 33013-1866).

9.4.2.3.7 Pump Area Coolers

Coolers are provided for the residual heat removal, charging, safety injection, and containment spray pumps (see Section 9.4.9.1).

9.4.2.3.8 Intermediate Building Supply and Exhaust Fans

The intermediate building ventilation system includes a supply fan that exhausts air from the intermediate building cleanside to the intermediate building restricted area side. Two additional exhaust fans, which are located in the intermediate building restricted area side, draw ventilation air from various areas of both the clean and restricted area sides of the intermediate building and discharge to the auxiliary building discharge header plant vent duct. Ventilation air is provided to the intermediate building cleanside through louvered, pneumatically controlled outside air intake dampers, which are located in the east wall of the intermediate building. The dampers will open when the outside air temperature reaches approximately 50°F and close when the outside air temperature falls below approximately 50°F. Additional ventilation air capability is available to be drawn into the intermediate building cleanside from the turbine building through a louvered wall opening, which is installed in front of a rolling fire door installed in the fire barrier wall. Additional exhaust air capability is provided to the intermediate building cleanside from four roof ventilators of approximately 78,400 cfm total capacity (see Drawings 33013-1871 and 33013-1872).

An additional exhaust fan is mounted on the existing grating at the west end of the intermediate building cleanside, near column G3 at elevation 278'-4". The fan is intended to enhance air movement from the intermediate cleanside basement to the building roof exhaust fans.

9.4.2.3.9 Steam Isolation Dampers

Steam isolation dampers are installed to minimize the potential for steam to pass through the wall that divides the clean side of the intermediate building from the restricted area side in the event of the design-basis high-energy line break, although this function is not credited in the Ginna Station current licensing basis, per Section 3.6.2.5.1.2. Three dampers are located at the wall at the points where the following ventilation systems pass through the wall:

A. Auxiliary building exhaust system.

B. Intermediate building exhaust system.

C. Intermediate building supply system.

To provide redundancy against mechanical failure, two isolation dampers are installed back to back in each line. The dampers in all three systems are electrically connected to individual trip and alarm systems with redundant control achieved through the use of electro-thermal type fusible links designed to release the dampers at a maximum of 165°F. (See Drawings 33013-1871 and 33013-1872.)

9.4.2.4 System Evaluation

9.4.2.4.1 Effect of Loss of Cooling on Pumps and Valves

Section 9.4.2.4.1 is retained for historical purposes. The auxiliary building transient heatup results discussed in this section have been superseded by the revised heatup analysis discussed in Section 9.4.2.4.2.

An engineering evaluation of the auxiliary building was conducted to determine the effects of loss of cooling on the operability of safety-related pumps and valves (*Reference 3*). The residual heat removal pumps pit, basement level, intermediate level, and operating level were examined assuming a loss of all ventilation concurrent with a large break loss-of-coolant accident or an emergency cooldown condition (e.g., steam line break in containment). The equipment considered was the safety injection pumps, containment spray pumps, residual heat removal pumps, and their associated valves. The temperature rise in the areas of concern was determined by applying the RHU computer code (*Reference 4*) modified to represent the specific area and building configurations. The heat sources considered were pumps, piping, solar effects, and lighting in the areas. The evaluation concluded that the equipment would be capable of operating in the resultant environment for the durations required to mitigate the accident. Detailed results are provided below.

The basement level east end contains the high-head safety injection and containment spray pumps. The primary heat load to this area comes from the pump motors and piping. During a loss-of-coolant accident, ambient temperatures rise to about 108°F in the first 25 minutes of the event and stabilize at 94°F after 20 hours. Temperatures are slightly lower during an emergency cooldown condition due to less run time of the subject pumps. The pump motors

and necessary valves for the containment spray and safety injection pumps are qualified for these environments (*Reference 2*).

Due to the large amount of uninsulated piping and relatively small volume in the residual heat removal pump pit, the ambient temperature rises to 149°F approximately 13 hours into the event during emergency cooldown conditions. This elevated temperature is maintained throughout the event since the residual heat removal system is realigned after the injection phase. During a loss-of-coolant accident, the ambient temperature also rises to 149°F, but not until 72 hours into the event. The contribution of the containment wall as a heat source and the temperature of the sump fluid during the recirculation phase contribute to these conditions. The residual heat removal pump motors are qualified for these environments (*Reference 2*).

The engineering evaluation also considered the effect of operating a single cooling unit with one tube plugged in the residual heat removal pump pit. For this configuration, the ambient temperature would rise to 106°F during emergency cooldown conditions and stabilize at 98°F. Since these temperatures are bounded by the above scenario, the residual heat removal pumps would remain operable during these conditions.

All other areas of the auxiliary building that were evaluated remained below 104°F throughout the accident.

9.4.2.4.2 Revised Auxiliary Building Loss of Cooling Analysis

As a result of the 1997 NRC design inspection (architect/engineer inspection) of the Ginna Nuclear Power Plant (*Reference 6*), the NRC identified three non-conservatisms with the original engineering evaluation (*Reference 3*). The three non-conservative areas identified were:

- Initial auxiliary building ambient temperature less than maximum temperature for normal plant operation.
- Initial refueling water storage tank (RWST) temperature less than the maximum allowable tank temperature.
- Failure to assume a 50 gpm residual heat removal (RHR) pump seal leak twenty-four (24) hours following the design basis loss-of-coolant accident (LOCA).

To address the NRC concerns, the transient heatup of the auxiliary building following a design basis loss-of-coolant accident (LOCA) was reanalyzed with the GOTHIC computer program (*Reference 7*). The GOTHIC program was first benchmarked against the original results (*Reference 3*). This benchmarking indicated that the GOTHIC peak room temperatures were comparable to those calculated by *Reference 3*, with GOTHIC typically calculating slightly higher peak room temperatures. Based upon this benchmark, GOTHIC was then used to investigate the impact of the non-conservatisms identified by the NRC inspection (*Reference 6*) on the auxiliary building transient temperature profiles following a design basis loss-of-coolant accident (LOCA).

The GOTHIC reanalysis (*Reference 8*) of the auxiliary building heatup included a parametric study of the individual impact of the three non-conservatisms on peak room temperatures.

Increasing both the initial auxiliary building ambient temperature and the initial refueling water storage tank (RWST) temperature resulted in a 2°F to 5°F increase in peak room temperatures. Assuming a 50 gpm residual heat removal (RHR) pump seal leak 24 hours after the LOCA caused the RHR pump room temperature to increase by 12°F with no noticeable impact on any of the other areas of the auxiliary building.

As a result of the increased peak temperatures calculated by *Reference 8*, the environmental qualification of all safety-related equipment inside the auxiliary building was reviewed. The review determined that all safety-related equipment was still capable of performing their safety-related functions. Typically, the magnitude of the increase in peak temperatures combined with the short duration of the temperature increase resulted in a negligible decrease in equipment qualified life that did not affect operability of the equipment.

9.4.2.4.2.1 AUXILIARY BUILDING TEMPERATURE WITH MINIMUM SERVICE WATER FLOW

In addition to the three NRC concerns described in 9.4.2.4.2, *Reference 8* also evaluated the impact of terminating spent fuel pool (SFP) cooling immediately following a design basis loss-of coolant accident (LOCA) on the auxiliary building peak temperatures. This was done in response to the scenario where only one SW pump is available post-LOCA and thus SFP cooling would be secured in order to direct service water to the more critical function of CCW for cooling of RHR. This analysis was prepared prior to Ginna's extended power uprate (EPU) and is preserved here as historical information. The analysis was not revised with EPU because this single SW pump scenario presented a greater vulnerability at EPU conditions; thus with EPU the availability of two SW pumps was assured by implementing a more restrictive Technical Specification for SW pumps.

With SFP cooling isolated due to single SW pump availability, at pre-EPU conditions, the auxiliary building operating level to heat up to 131°F in the first 24 hours following the design basis loss-of-coolant accident (LOCA) due to heat loss from the spent fuel pool (SFP) to the operating level of the auxiliary building. The temperatures of the lower levels of the auxiliary building were unaffected by the termination of cooling to the spent fuel pool (SFP).

Finally, *Reference 8* evaluated the combined effects of the three NRC concerns and the termination of spent fuel pool (SFP) cooling on the auxiliary building peak temperatures following a loss-of-coolant accident (LOCA). The operating level peak temperature at pre-EPU conditions was calculated to be 131°F due to convective heat transfer from the spent fuel pool to the auxiliary building operating level. After EPU the availability of two SW pumps allows continued SFP cooling, and thus, peak temperature at the operating level is 105°F. The residual heat removal (RHR) pump room peak temperature at pre-EPU conditions was determined to be 166°F due to the 50 gpm residual heat removal (RHR) pump seal leak. All of the other areas of the auxiliary building had peak temperatures of approximately 110°F or less at pre-EPU conditions. The peak auxiliary building temperatures are summarized in UFSAR Table 3.11-1.

9.4.2.4.3 Effect of Loss of Offsite Power on Ventilation Flow

The above engineering evaluation also examined the ventilation flow in the auxiliary building and intermediate building to determine if on a loss of offsite power the flow would be reversed such that the direction of flow of airborne radioactivity would not be from areas of low activity toward areas of higher activity. It was determined that in all cases analyzed for loss of offsite power and for ventilation isolation from a high radiation signal there would be no backflow through any path from areas of higher radiation to areas of lower radiation.

9.4.3 CONTROL ROOM AREA VENTILATION SYSTEM

The function of the control room area ventilation system is to provide a controlled environment for the safety and comfort of control room personnel and to ensure the operability of control room components during normal operating, anticipated operational transient, and design-basis accident conditions. The control room area ventilation system design is shown in Drawing 33013-1867 and is discussed in Section 6.4.

9.4.4 SPENT FUEL POOL AREA VENTILATION SYSTEM

The spent fuel pool (SFP) area ventilation system is a part of the auxiliary building ventilation system (ABVS) shown in Drawing 33013-1871. The system serves to control airborne radioactivity in the spent fuel pool (SFP) area during normal operating conditions. This is accomplished by directing air from the auxiliary building supply air unit across both the spent fuel pool (SFP) and the decontamination pit to exhaust air ducts which are connected to the suction of the auxiliary building exhaust fan C. Exhaust air from the spent fuel pool (SFP) water surface is drawn through roughing filters and, depending on system alignment, charcoal filters. Discharge from the auxiliary building exhaust fan C passes through HEPA filters, a main auxiliary building exhaust fan, and then out the plant vent.

The original design flow rate for the SFP charcoal filters was 20,000 cfm. However, system operability for Technical Specifications is based upon limiting degradation of air flow from the new condition plus maintaining a negative pressure in the auxiliary building. The actual analysis of a fuel handling accident is independent of system air flow and is discussed in Section 15.7.

The system is also credited for control of airborne radioactivity in the SFP area during anticipated operational transient and design-basis accident conditions. However, the system is not designed for consideration of loss of offsite power or other single failures.

9.4.5 TURBINE BUILDING VENTILATION SYSTEM

The turbine building, while not requiring a heating, ventilation, and air conditioning system, uses roof vent fans, wall vent fans, windows, and unit heaters for ventilation and temperature control. The system is shown in Drawings 33013-1873 and 33013-1874. The fans are not supplied by emergency (diesel generated) power, and loss of these fans would not be critical to a safe shutdown.

In the turbine building, the main feedwater pump room and feedwater pump equipment cooling systems use a mixture of outside air and room air to control the room and equipment tem-

peratures. No mechanical means of heating or cooling is used. A temperature control system controls the feedwater pump room return air dampers and equipment outside air dampers that admit air to the equipment air supply fan plenum mixed at a setpoint temperature. The equipment cooling air discharges into the feedwater pump room above the feedwater pump motors in the general vicinity of the motor air intakes. A mixture of outside air and room air enters the feedwater pump motor enclosures, providing the required motor cooling. The room temperature control system controls separate outside air inlet dampers to the feedwater pump room and two feedwater pump room exhaust fans to control feedwater pump room temperature. The feedwater pump room supply fan outside air dampers and room exhaust air dampers fail open to provide cooling on loss of instrument air to the temperature control system. The room return air dampers and the feedwater pump room outside air inlet dampers fail closed on loss of instrument air to the temperature control system. Loss of ac power to the equipment supply and room exhaust fans would result in loss of cooling. High feedwater pump winding temperature is alarmed in the control room.

9.4.6 SERVICE BUILDING VENTILATION SYSTEM

The service building ventilation system, shown in Drawings 33013-1875 through 33013-1879 and 33013-1881, consists of six air handling units serving the various areas of the service building. Air from uncontaminated areas is exhausted through roof exhaust fans. Air from areas of potential contamination, such as laboratories equipped with hoods, are exhausted through the controlled intermediate building controlled access area exhaust fans.

The kitchen hood supression system in the cafeteria will exhaust smoke and wet chemical agent upon system activation. This is supported by the service building air handling units.

Controlled Access Area Fans 1A and 1B

Controlled access area fans 1A and 1B include high efficiency particulate air and charcoal filter banks, a low-flow alarm, dampers, and fans (see Drawing 33013-1875). These fans take suction from the following areas and discharge to the Auxiliary Building HEPA filter vent which is exhausted by the main Auxiliary Building exhaust system to the main vent header:

A. Men's and women's decontamination general areas.

B. Radiation protection and chemistry office general area.

C. Primary sample room general area.

D. Primary sample hood.

E. Primary and secondary sample lab hoods.

F. Hot shop general areas.

9.4.7 ALL-VOLATILE-TREATMENT BUILDING VENTILATION SYSTEM

9.4.7.1 Introduction

This system provides ventilation and heating to maintain required temperatures for the all-volatile-treatment (condensate demineralizer) building and the condensate booster pump area

of the turbine building. The system is designed for the following temperature conditions (see Drawing 33013-1874):

A. Outside design temperature.

1. Summer 95°F, dry bulb, 75°F, wet bulb.
2. Winter -5°F, dry bulb.

B. Inside design conditions.

1. Maximum 104°F (40°C), dry bulb.
2. Minimum 40°F.

9.4.7.2 Summary Description of the System

9.4.7.2.1 Compressor and Booster Pump Area Ventilation System

Ventilation is provided to the compressor and booster pump area by two 50% capacity fans supplying outside air. One fan is thermostatically started upon a rise in room temperature. Temperature control of the area is accomplished by modulation of the outside air intake damper and the recirculation damper. The room thermostat has a proportional output signal which is fed to a low pressure selector. The output of the pressure selector modulates the outside and return air damper operators. When the room temperature rises above the thermostat setting, the outside air damper opens and the recirculation damper closes to a position which is proportional to the temperature deviation between the actual room temperature and the setpoint. The cooler outside air will then mix with the recirculation flow and lower the temperature in the room. During winter conditions, cold outside air could bring the duct air temperature down to undesirable low temperatures. The duct air temperature is therefore measured by a pneumatic pressure transmitter. The signal from the transmitter is fed to a controller with an internal adjustable setpoint. The output signal from the controller is the second input to the low pressure selector. For low duct air temperatures the signal from the room thermostat will be blocked in the low pressure selector and the pressure signal from the controller will modulate the damper operator to maintain a duct air temperature of 60°F.

The two 50% capacity supply fans are automatically controlled by individual room thermostats. The first fan is started at a preset room temperature by the same thermostat which was utilized for temperature control of the intake air dampers. The output signal from the thermostats actuates a pressure switch which starts the fan. Should the temperature continue to rise, the second room thermostat will actuate its pressure switch, which will start the second fan.

A pneumatic switch has been provided by which each thermostat can be connected to control any of the two fans.

A temperature switch is located in the discharge duct for each fan. This switch will trip the fan on high temperature.

9.4.7.2.2 Demineralizer Area Ventilation System

Two supply fans of 50% capacity and four exhaust fans of 25% capacity ventilate this area. The function and modulation of air supply fans are as described for the compressor and booster pump area. Two of the four exhaust fans are switched into operation when the first supply fan starts. The other two exhaust fans start when the second supply fan is started.

An electric heating coil, which is not currently in use, is capable of heating the released air of the high and low conductivity waste tanks above its saturation limit. The heater could be put into operation as soon as the air blower starts. The coil is deenergized when the air blower stops. The discharge from the common header is brought to one of the exhaust openings of the all-volatile-treatment exhaust system. The heater unit is classified as a non-nuclear safety system.

9.4.7.2.3 Demineralizer Area Control Room System

One system of 100% capacity ventilates and heats this room. The system operates continuously. As the outside temperature drops below a predetermined level, the outside air damper closes and the unit goes on recirculation. As the room temperature drops below the thermostat setting, a steam heating coil provides heat for the room. The roughing filter in this system prevents excessive dirt or insects from being drawn into the control room. Two temperature switches are located in the fan discharge duct. One switch will trip the fan on high temperature while the other switch trips the fan on low temperature.

9.4.7.2.4 Heating System

Steam and electric unit heaters supply heat to the demineralizer area control room and to the demineralizer area as required. The electric unit heaters in the demineralizer area and the control room are standby heaters used in the event of malfunction of the steam heaters.

9.4.8 TECHNICAL SUPPORT CENTER VENTILATION SYSTEM

9.4.8.1 System Description

The technical support center heating, ventilation, and air conditioning system consists of the following subsystems in the technical support center (Drawing 33013-1256):

A. Central heating, ventilation, air conditioning, and charcoal filter system.

B. Office air conditioning system.

C. Mechanical equipment room cooling system.

D. Diesel generator room cooling system.

E. Battery room cooling system.

F. Uninterruptible power system room cooling system.

G. Computer room air conditioning system.

H. Toilet and kitchen exhaust system.

I. Battery, diesel, and corridor heating system.

J. Mechanical equipment room heating system.

In addition to maintaining year-round occupancy comfort levels, the heating, ventilation, and air conditioning system provides personnel protection from airborne radiological contaminants, maintains a positive pressure in the emergency mode relative to the outside, and provides cooling, heating, and ventilation required by special areas.

The central heating, ventilation, air conditioning, and charcoal filter system serves the occupied areas of the building by providing three modes of operation: normal with mechanical cooling or cool outside air, normal with steam heating, and emergency with mechanical cooling, steam heating, and charcoal filtering. A flow controller is used to throttle the charcoal filter inlet dampers to ensure that the maximum design rate of 3000 cfm is not exceeded. The main air handler fan can move up to 9300 cfm of air. A relief damper opens under the control of a differential pressure controller to maintain a 1/8 inch water gauge (0.125 in. wg ± 10%) differential pressure in the conditioned area when in the emergency mode.

The administrative computer room office is air conditioned by the technical support center central system. The administrative computer room is cooled by a packaged service-water-cooled air conditioning unit. The function of the packaged unit is to provide the proper computer room environment for the administrative computer system.

Cooling systems for the mechanical equipment room, diesel generator room, battery room, and uninterruptible power system room induce outside air for cooling by means of exhaust fans.

The plant process computer system (PPCS) and safety parameter display system (SPDS) computer room is cooled by two packaged air conditioning units. These units are the air-cooled type with the condensers placed outside on the roof. Each unit is sized for 100% of the total room heat gain. The technical support center central heating, ventilation, and air conditioning system is also ducted to the computer room and provides backup in the event of failure of the packaged units. The function of the packaged units is to provide the proper computer room environment for the plant process computer system and safety parameter display system computers.

The kitchen and toilet rooms are exhausted by a fan inducing air from the occupied areas.

The battery room, diesel room, and corridor are provided with warm air from the uninterruptible power system room by separate circulating fans.

The mechanical equipment room is heated with a steam unit heater.

9.4.8.2 System Operation

9.4.8.2.1 Cooling Systems

A thermostat sensing outside air temperature above or below 60°F (adjustable) indexes operation to mechanical or outside air cooling.

When the system is indexed to mechanical cooling, the outside air damper and the recirculated air damper open to a pre-established setting to admit approximately 600 cfm of outside

air. A thermostat sensing mixed air temperature maintains the mixed air temperature by modulating (loading/unloading and cycling) the air conditioning compressor capacity. Zone thermostats maintain local space temperature by varying air volume.

When the system is indexed to outside air cooling, the outside air damper and the recirculated air damper are modulated by a thermostat sensing mixed air temperature. Zone thermostats maintain local space temperature by varying air volume. The amount of outside air admitted does not fall below 400 cfm.

The diesel generator room exhaust fan and air intake dampers are controlled by a room thermostat when the diesel is not operating. When the diesel is operating, the room exhaust fan is off, but both air intake dampers are open and the diesel generator skid exhaust fan operates.

The mechanical equipment room exhaust fans and air intake damper are controlled by a two-step thermostat. The uninterruptible power source room exhaust fan and air intake damper are controlled by a room thermostat. The battery room exhaust fan and air intake damper are controlled by a room thermostat.

9.4.8.2.2 Heating Systems

The air conditioning and charcoal filtering system heating is provided by steam being admitted to the air handling unit heating coil. Space heating thermostats control the space temperature by modulating the air handling unit dampers and variable air volume boxes as required by the space conditions.

Additional heating capabilities are provided to several perimeter office areas by electric reheat coils that are controlled by individual space heating/cooling thermostats.

The battery room heating fan operates when the room temperature falls below the setpoint of the room heating thermostat. A receptacle has been provided in the technical support center south corridor for connection of a portable electric heater if needed to provide heating capabilities.

The diesel generator room heating fan operates when the room temperature falls below the setpoint of the room heating thermostat. The room is also provided with space electric heaters, which operate as needed.

The corridor heating fan operates when the corridor temperature falls below the setpoint of the corridor heating thermostat.

The mechanical equipment room unit heater fan operates whenever the room temperature falls below the setpoint of the room heating thermostat.

The toilet and kitchen exhaust fan operates continuously, except during an emergency operating mode.

9.4.9 ENGINEERED SAFETY FEATURES VENTILATION SYSTEMS

The engineered safety features ventilation systems include those ventilating and cooling systems that service equipment required either following an accident or to ensure safe plant shut-

down. Equipment and/or areas serviced by these ventilating and cooling systems include the following:

A. Engineered safety features equipment.

B. Relay room.

C. Battery rooms.

D. Essential auxiliary systems.

E. Diesel generator rooms.

F. Standby auxiliary feedwater system.

G. Post-accident fan coolers and charcoal filter system.

9.4.9.1 Engineered Safety Features Equipment Ventilation and Cooling

Safety Injection System

The safety injection system includes the high-pressure safety injection pumps located in the basement level of the auxiliary building and the residual heat removal pumps located in the subbasement level of the auxiliary building. The safety injection pump drive motors are cooled by redundant, stand-alone air cooling units which are shared with the containment spray pumps and from which the cooling air is ducted to a point adjacent to the cooling intake vents of each drive motor. The residual heat removal pump room coolers are also redundant stand-alone air cooling units. The cooling units are comprised of a water-cooled heat exchanger and a blower. Service water (SW) is the cooling medium. The coolers are designed to Seismic Category I criteria. (See Drawing 33013-1869.) However, none of these air cooling units are required for operation of the pumps (*Reference 2*), and the coils for the safety injection pumps have been blanked off since 1992 such that the associated fans are operable but the air is no longer cooled by service water (SW).

Containment Spray System

Cooling of the containment spray pump drive motors on the basement level of the auxiliary building is by the redundant cooled air-cooling units shared with the safety injection pump motors and described above. The cooling air is ducted to a point adjacent to the cooling intake vents of the two drive motors, in a similar manner, as for the safety injection pump motors. (See Drawing 33013-1869.) These air cooling units are not required for operation of the containment spray pumps (*Reference 2*), and the coils for the containment spray pumps have been blanked off since 1992 such that the associated fans are operable but the air is no longer cooled by service water (SW).

9.4.9.2 Relay Room

The relay room contains two self-contained, water-cooled air-cooling units that maintain a low normal room temperature during MODES 1 and 2 (see Drawing 33013-1868).

9.4.9.3 Battery Rooms

Ventilation of the battery rooms is provided by two propeller exhaust fans that take suction from the battery rooms and discharge to a common exhaust duct. (See Drawing 33013-1868.) The battery room air conditioning unit includes a refrigeration unit, an electric heating coil, and a fan. The unit provides approximately 2900 cfm of supply air to the battery rooms; of which approximately 2500 cfm is return air from the battery room propeller fans and 400 cfm is makeup air taken from the air handling room. Exhaust air from the control room HVAC system is released into the control building air handling room and fresh outside air can enter the room through a separate outside air intake duct. The system provides sufficient makeup air and return air to maintain hydrogen in the battery rooms below the lower flammability limit.

Ideal battery room temperature is between 75 and 77°F to allow optimum battery life. Sizing of the batteries was based upon an assumed electrolyte temperature equal to the 55°F Technical Specifications minimum temperature for operability. Worst case battery temperature calculations that assume a 71°F room temperature at the start of a station blackout predict battery temperatures of 68°F after 4 hours and 65°F after 8 hours. The worst case hydrogen generation calculation assumes 104°F as the maximum battery temperature.

In the event of failure of the main air handling unit, air flow switches will actuate the two normally closed dampers in the battery rooms to provide a flow path from the air handling room through the battery rooms by way of the battery room propeller fans. In the event of loss of ac power to the battery room ventilation system, air flow switches installed downstream of each battery room propeller fan would annunciate in the control room on low air flow in either battery room. A manually actuated backup fan, powered by the dc batteries, supplies air from the air handling room to both battery rooms by the opening of two normally closed volume dampers installed in the battery room block walls. Automatic actuation of the dc-powered backup fan is not required since hydrogen buildup from battery charger operation would not be excessive or immediate. If the battery chargers are not in operation, such as during a station blackout, hydrogen generation would not occur.

An analysis was performed with no credit taken for the dc-powered fan and with the ac-powered propeller fans and air conditioning unit not operating to determine the maximum temperatures in the battery rooms. The results showed that the environmental service conditions for the battery rooms in Table 3.11-1 would not be exceeded after 5 hours, assuming the initial temperature had been 77°F. The unacceptable hydrogen concentration level of 2% would not be exceeded until after 73.3 hours, with both batteries being equalized, which allows sufficient time to manually start the backup fan after receipt of the battery room loss of ventilation alarm.

9.4.9.4 Essential Auxiliary Systems

The following essential auxiliary systems require ventilation and/or cooling.

Chemical and Volume Control System

In addition to general cooling by ambient air, the charging pump room is cooled by redundant fan-driven air coolers using service water (SW) as the cooling medium. To ensure that the pumps and drive motors are cooled, the cooled air is ducted directly to the room from the coolers. (See Drawing 33013-1869.)

The emergency diesel generators automatically supply the cooling fans by separate motor control centers in the case of loss of normal power. This places one cooler on diesel 1A and the other on diesel 1B for redundancy. The capacity of each cooling unit is sufficient to maintain acceptable operating temperatures.

The cooling units are designated safety-related, nonseismic by current Regulatory Guide 1.29 classification and Seismic Class II in accordance with the original design criterion for Ginna Station (see Section 3.7.1.1). The cooling units are nonseismic consistent with the post-accident safety function of the charging system. Should failure of both charging pump room coolers occur due to a fire, high energy line break, or seismic event, other means exist to maintain the ability to inject borated water into the reactor coolant system. These include use of the high-pressure safety injection pumps or by establishing supplemental cooling to the charging pump room to maintain the ambient temperature within allowable limits for operability of the charging pumps.

Component Cooling Water System (CCW)

The primary ventilation and cooling requirements of the component cooling water (CCW) system are associated with its circulation pump motors. These motors are located on the main operating floor of the auxiliary building where cooling is provided by the ambient air of the operating floor. This air is provided by the auxiliary building supply air handling unit described in Section 9.4.2.3. However, ambient temperatures would not exceed the capabilities of the component cooling water (CCW) pumps even if the auxiliary building air handling unit were inoperable.

9.4.9.5 Diesel Generators

The diesel generators (with associated electrical switchgear) are housed in adjacent but separate rooms, each serviced by a ventilation system. Each room is ventilated by two inlet fans supplying outside air. Each fan takes suction from a common header and discharges through separate ductwork, dampers, and discharge diffusers. One fan in each room discharges a supply of air directly on the instrument and control cabinets. Excess air is discharged to the outdoors through automatic, pressure-actuated room vents, backdraft dampers, and wall-mounted louvers. No refrigeration or service water (SW) air cooling is used. (See Drawing 33013-1873.)

When the diesels are not running, the damper in each line is held closed by 20-psig instrument air by a solenoid valve associated with each damper. A diesel generator start signal automatically opens the dampers and starts one of the two room supply fans. The second supply fan starts when the diesel is running and the room temperature reaches the thermostat setpoint. The fans in the diesel generator room A are powered from a motor control center within the

room that is powered from diesel generator 1A via bus 14. The fans in diesel generator room B are powered from a motor control center within the room that is powered from diesel generator 1B via bus 16. Power to actuate the solenoid valves is provided by the 125-V dc system through breakers in each room. Once opened, the dampers remain open until the diesel generator is deenergized.

In the event of loss of instrument air to the solenoid valves, the air pressure in the line causes the damper motor to retract and open the damper. Should a diesel generator start signal be received, the dampers would be in their safe position (open) to provide the needed ventilation. The dampers would remain in the open position until air pressure is returned to service and the diesel generator is deenergized. Adequate ventilation for equipment cooling and for removal of any hydrocarbon gases is therefore ensured when the diesel generators are operating.

The supply fan that directs air near the engine jacket water-sensing line in each room is equipped with a thermostat that delays starting of the fan until sufficient heat is rejected by the diesel engine to prevent freezing of the line in cold weather. This system is designed so that no failure of a single active component will prevent operation of the ventilation system such that affected components would exceed their design limits or would cause the loss of both diesel generators.

Heating of each room is by unit steam heaters (two per room). Should one of the steam supply lines break, only its respective diesel-generator room would be affected. The other diesel-generator room would be isolated from the break.

Humidity in the lower level (vault-area) of each diesel-generator room is kept low by a packaged dehumidifier, which is controlled by an internal humidistat. The dehumidifiers are nonseismic, are not required to maintain functional integrity during a seismic event, and are located so that they will not adversely affect safety-related systems or components. Vault humidity is monitored regularly, and equipment inside the vault areas is part of the routine maintenance program.

9.4.9.6 Standby Auxiliary Feedwater System (SAFW)

9.4.9.6.1 System Operation

The standby auxiliary feedwater pump (SAFW) room cooling and heating system provides cooling and heating as required to maintain the pump room temperature within the design temperature range of 60°F (minimum) to 120°F (maximum). The standby auxiliary feedwater pump (SAFW) room is part of the auxiliary building addition. This cooling and heating system is needed to provide an acceptable environment for the equipment in the pump room, which includes the two standby auxiliary feedwater pumps (SAFW) and their electric drive motors (see Drawing 33013-1869).

The standby auxiliary feedwater pump (SAFW) room cooling system is capable of operation whenever the standby auxiliary feedwater pumps (SAFW) are needed for operation. This is a result of the fact that the cooling system provides the air cooling required for continuous operation of the pump motors. A given cooling unit is automatically started whenever its cor-

responding standby auxiliary feedwater pump (SAFW) is started. Due to its safety-related nature, the cooling system must remain functional during all modes of plant operation including the period during and after a safe shutdown earthquake. Thus, the two fan drive motors for the standby auxiliary feedwater pump (SAFW) room cooling units are supplied from separate, redundant Class 1E electrical systems.

Multiple assessments have been made of the standby auxiliary feedwater building temperature under various accident condition. The room coolers are not required when ambient outdoor air temperature is below 72°F (*Reference 12*).

The standby auxiliary feedwater pump (SAFW) room heating system operates whenever the temperature in the pump room falls below the thermostat setting of 60°F to 65°F of the unit heater and the unit heater's source of non-safety-related electric power is available. Plant operating conditions have no effect on the heating system unless non-safety-related electric power is unavailable. The heating system is not safety-related or seismically classed since its function is not required for proper operation of the standby auxiliary feedwater system. In case of a heating system failure during subfreezing weather, the water in the feedwater system can be prevented from freezing by using a portable heater or by running one of the standby auxiliary feedwater pumps (SAFW) on recirculation with the condensate test tank, thus warming the pump room with the pump motor heat.

9.4.9.6.2 Controls and Instrumentation

The start/stop controls for the standby auxiliary feedwater pump (SAFW) room cooling units are manually and/or automatically operated. Each cooling unit is arranged so that it automatically starts or stops at the same time that its corresponding standby auxiliary feedwater pump (SAFW) is manually started or stopped (from either the control room or the local station). In addition, the cooling units can be started/stopped independently of the standby auxiliary feedwater pumps (SAFW) from a local control panel in the pump room. This manual/automatic control is determined by a maintained contact three position control switch provided in the local control panel. This switch has run-auto-off positions. It must be manually returned to the auto (or pump control) position whenever local control is no longer being utilized.

Flow of cooling water (service water (SW)) through the cooling coil of each cooling unit is controlled by an open-closed two-way valve in the discharge line from the coil. When a cooling unit is started automatically via the standby auxiliary feedwater pump (SAFW) control, the cooling water control valve for that cooling unit opens fully and stays open until the unit is shut down, at which time it fully closes. However, when the cooling unit is started locally (manual), operation of the cooling water control valve is via a temperature indicating switch that is arranged to sense and indicate the temperature of the return air to the unit. The temperature switch maintains the return air temperature (pump room temperature) within a band between 70°F and 120°F by causing the cooling water control valve to open or close as required. The control valves are fail safe, since they fail open. The control valves close completely when their particular cooling unit is not running, thus stopping service water (SW) flow through the cooling coil.

The roughing filter bank of each cooling unit has installed ports for the connection of a differential pressure indicator for local pressure drop readout across each filter bed. A temperature

indicator is installed to give local indication of the air temperature entering each cooling unit. A common alarm function is provided if space temperature exceeds the high temperature setpoint or the low temperature setpoint.

A locally indicating temperature indicating switch is located in the standby auxiliary feedwater pump (SAFW) room. It alarms the control room upon detection of excessively high or low room temperatures. An air flow switch is located in the discharge duct of each cooling unit. They alarm the control room in case a loss of air flow is sensed. They are interconnected with the controls of the cooling unit fan motors so that the alarm for a loss of air flow is blocked when a cooling unit is intentionally stopped. All of these alarms are grouped to give a single control room malfunction alarm.

The controls for the standby auxiliary feedwater pump (SAFW) room heating system are completely self-contained within each of the system's two electric unit heaters. Each unit heater operates automatically via its built-in thermostat that starts and stops the heater fan motor and energizes and deenergizes the heater electric heating coil. The unit heater thermostats are set so that when the pump room temperature decreases to approximately 65°F, the first unit heater will automatically start. Should the temperature continue to decrease, the second unit heater will automatically start when the pump room temperature drops to 60°F. The only alarm associated with the heating system is low pump room temperature alarm.

9.4.9.7 Post-accident Fan Coolers and Charcoal Filters

This system is described in Sections 9.4.1.2.7 and 6.2.2.

9.4.10 STATION HEATING STEAM SYSTEM

The Ginna heating and process steam is provided from the house boiler, located in the screen house and from a connection from the main steam system. The systems provided with steam from this system include the unit heaters in the screen house, intermediate building, auxiliary building, turbine building, diesel generator rooms, auxiliary building air handling units, containment purge supply unit, boric acid batch tank, gas stripper, and the boron recycle evaporator.

REFERENCES FOR SECTION 9.4

1. Catalytic, Inc., Mild Environment Temperature Transient Response for R. E. Ginna Nuclear Power Plant Auxiliary, Control, and Diesel Generator Buildings (EWR 3304), dated July 1982.

2. RG&E Design Analysis NSL-4529-DA035, Auxiliary Building Ventilation Systems (ABVS), Revision 0, May 29, 1991.

3. Devonrue, Engineering Evaluation of R. E. Ginna Nuclear Power Plant Ventilation System, Revision 1, November 1989.

4. Devonrue Computer Verification for RHU Computer Code, dated January 1988.

5. Devonrue, R. E. Ginna Standby Auxiliary Feedwater Building Thermal Environment Study, Revision 1, dated January 1991.

6. NRC Inspection Report 50-244/97-201, R.E. Ginna Nuclear Power Plant Design Inspection, dated September 24, 1997.

7. GOTHIC Containment Analysis Package, Version 5.0, prepared for EPRI, RP 444-1, dated December 1995.

8. ALTRAN Technical Report 99-124-TR-001, Ginna Nuclear Plant - Gothic Model of Heatup Transient in the Auxiliary Building, Revision 0, dated October 1999.

9. Rochester Gas and Electric Corporation Safety Evaluation SEV-1147, "85°F Maximum Lake Temperature", Revision 0.

10. Rochester Gas and Electric Corporation Plant Change Request (PCR) 2001-0042.

11. Westinghouse Electric Company, R. E. Ginna, Head Assembly Upgrade Package, General Assembly Drawing 6469E26.

12. Extended Power Uprate (EPU) - Stone & Webster Balance of Plant (BOP) Engineering Report, HVAC Systems, Section 8.4.1, Subsection 3.12 for Standby Auxiliary Feedwater Pump Room Cooling.

Table 9.4-1
CONTAINMENT VENTILATION SYSTEM PRINCIPAL COMPONENT DATA SUMMARY

System	Units Installed	Unit Capacity	Units Required for Normal operation (MODES 1 and 2)
Containment recirculating			
Cooling coils - normal	4	2.05×10^6 Btu/hr	3
Cooling coils - design-basis accident	4	54.6×10^6 Btu/hr	3
Demister	4	42,000 cfm	3
Filters, 40 high efficiency particulate air filter cells per unit	4	40,000 cfm	3
Fans	4	46,500 cfm	3
Fan pressure - normal	---	8.3 in. H_2O	---
Fan pressure - design-basis accident (286°F)	---	32.0 in. H_2O	---
Fan motors (440 V, three-phase)	4	300 hp	3
Control rod drive cooling			
Fans, standard conditions	2	14,000 cfm	1
Fan pressure	---	18.6 in. H_2O	---
Fan motors	2	60 hp	1
Reactor compartment cooling			
Plenum	1	-	1
Fans, standard conditions	2	21,175 cfm	1
Fan pressure	---	5 in. H_2O	---
Fan motors	2	30 hp	1
Cooling coils	2	342,000 Btu/hr	2
Containment Shutdown purge supply			
Fans, standard conditions	2	12,220 cfm	---
Fan pressure	---	4 in. H_2O	---
Fan motors	2	15 hp	---
Preheat coils	4	-	---

System	Units Installed	Unit Capacity	Units Required for Normal operation (MODES 1 and 2)
Reheat coils	2	-	---
Air filters, roughing	1	25,000 cfm	---
Containment Shutdown purge exhaust			
Fans, standard conditions	2	12,600 cfm	---
Fan pressure	---	6 in. H_2O	---
Fan motors	2	20 hp	---
Plenums	2	13,000 cfm	---
Filters, 12 high efficiency particulate air filter cells per unit	2	12,000 cfm	---
Charcoal filters, 40 cells per unit	2	13,200 cfm	---
Containment Mini purge supply			
Fan, standard conditions	1	2000 cfm	1
Fan pressure	---	47.5 in H_2O	1
Fan motor	1	30 hp	
Containment Mini purge exhaust[a]			
Refueling water surface, supply			
Fan, standard conditions	1	6900 cfm	---
Fan pressure	---	1 in. H_2O	---
Fan motor	1	3 hp	---
Refueling water surface, exhaust			
Fan, standard conditions	1	11,000 cfm	---
Fan pressure	---	2.2 in. H_2O	---
Fan motor	1	7.5 hp	---
Containment auxiliary charcoal filter			
Fans, standard conditions	2	5100 cfm	Optional
Fan pressure	---	3.5 in. H_2O	---
Fan motors	2	5 hp	Optional

System	*Units Installed*	*Unit Capacity*	*Units Required for Normal operation (MODES 1 and 2)*
Filters, six high efficiency particulate air filter cells per unit	2	6000 cfm	Optional
Charcoal filters, 16 cells per unit	2	5280 cfm	Optional
Containment postaccident charcoal filter			
Charcoal filters 120 cells per unit	2	38,000 cfm[b]	---
Steam Heating			
Heaters, 2-psig steam, 60°F	2	94,600 Btu/hr	---

a. The containment mini purge system exhausts through the auxiliary building ventilation system (ABVS).

b. Represents original rating. See Section 6.5.1.2.1 for the latest rating figures.

9.5 OTHER AUXILIARY SYSTEMS

9.5.1 FIRE PROTECTION SYSTEMS

9.5.1.1 Design Criterion

9.5.1.1.1 General Design Criterion 3

The design criterion used during the licensing of Ginna Station was General Design Criterion 3 (GDC 3), included in the Atomic Industrial Forum (AIF) version of proposed criteria issued by the AEC for comment on July 10, 1967. The criterion was as follows:

CRITERION: The facility is designed so that the probability of fires and explosions and the potential consequences of such events does not result in undue risk to the health and safety of the public. Noncombustible and fire resistant materials shall be used throughout the facility wherever necessary to preclude such risk, particularly in areas containing critical portions of the facility such as containment, control room, and components of engineered safety features (AIF-GDC 3).

With respect to this criterion, fire prevention in all areas of the plant was provided by structure and component design which optimized the containment of combustible materials and maintained exposed combustible materials below their ignition temperature in the design atmosphere. Fire control requires the capability to isolate or remove fuel from an igniting source, to reduce the combustible temperature below the ignition point, to exclude the oxidant, and to provide a combination of the three basic control means. The latter two means were fulfilled by providing fixed or portable fire-fighting equipment of capacities proportional to the energy that might credibly be released by fire.

Ginna Station was designed on the basis of limiting the use of combustible materials in construction and of using fire-resistant materials to the greatest extent possible.

The fire protection system was designed to have the capability to extinguish any probable combination of simultaneous fires which might have occurred at the station. The system was designed in accordance with the standards of the National Fire Protection Association (NFPA) and was based generally on the recommendations of the Nuclear Energy Property Insurance Association. Refer to Section 9.5.1.1.2 and Section 9.5.1.1.3 for updated design information.

Prefire fighting strategies were developed for fighting fires in all the plant areas and were included in the Plant Fire Response Plans. Fire prevention was controlled by administrative methods to prevent accumulations of combustible materials and to practice good safety methods. Periodic practice exercises were employed to ensure that plant personnel were familiar with the proper corrective procedures.

Fire detection and fire fighting systems of appropriate capacity and capability were provided in the original design to minimize the adverse effects of fire on structures, systems, and components important to safety. Sensing devices included both ionization chambers and temperature detectors. Fire-fighting equipment included automatic water deluge in appropriate areas.

Halon 1301 total flooding system was installed. Appropriate hoses and portable fire fighting equipment were provided and placed throughout the plant.

The design of the fire protection system was reviewed in 1972 (*Reference 1*) on the basis of GDC 3 of Appendix A to 10 CFR 50 which was promulgated after the licensing of Ginna Station. It was determined that the requirements of GDC 3 were appropriately met by the plant design.

9.5.1.1.2 Branch Technical Position 9.5-1

In May 1976, the NRC Branch Technical Position 9.5-1 was published for comment as Regulatory Guide 1.120, and in August 1976, Appendix A to Branch Technical Position 9.5-1 was published for use by plants docketed prior to July 1, 1976. The design of the fire protection system was reviewed against the criteria of the Branch Technical Position in a submittal to the NRC in February 1977 (*Reference 2*). In this submittal, RG&E stated that Position A-9 of Appendix A to Branch Technical Position 9.5-1 (regarding simultaneous fires) is "Not Applicable" to Ginna Station. The submittal included a fire hazards analysis and several proposed design modifications in compliance with the regulatory guidance. A safety evaluation report was issued by the NRC in February 1979 (*Reference 3*) with supplements in December 1980 (*Reference 4*), February 1981 (*Reference 5*), and June 1981 (*Reference 6*).

Updated fire hazards analyses are documented in *Reference 17*.

Automatic smoke detection systems are provided in all plant locations containing safety-related equipment and/or concentrations of combustible materials. In addition, automatic preaction sprinklers or automatic water spray nozzles are installed for all cable trays where large concentrations of cable trays exist within safety-related areas or which contain safety-related cabling. All areas with flammable liquids are protected by a detection system and an automatic water suppression system except for the Turbine Building areas containing lubrication piping and the turbine bearings themselves. The relay room is protected by a detection system, an automatic Halon system, and three manual water spray systems.

Flamemastic, a fire-retardant coating, has been applied in locations containing concentrations of cable trays such as in the vault below emergency diesel generator 1B and at the entrances of the cable tunnel from the intermediate building, air handling room, and auxiliary building. New cables which meet IEEE-383 have also been added in various locations. These cables do not need to be coated with Flamemastic.

Manual fire-fighting equipment exists at the station in the form of manual hose stations and portable extinguishers. Should any manual hose station be out of service, the location and spacing of other hose stations ensure effective coverage of the affected area by adding one additional hose length to the nearest hose station not out of service.

The plant utilizes two separate fire water systems. Redundant electric- and diesel-driven fire pumps are provided onsite to ensure that pressure and water flow requirements of the automatic and manual suppression capabilities are maintained. In addition, an offsite supplied underground yard fire water system with diesel-backed redundant pumps is available. A cross-tie capability exists between these two sources so that the manual hose stations and

some automatic suppression systems can be supplied even with the failure of both onsite pumps. Several suppression systems would require additional flow/pressure capacity to meet operability requirements (*Reference 18*).

Additional plant modifications include the upgrading of detection and suppression systems, fire area penetration seals, reactor coolant pump oil collection systems, fire area dampers, drain backflow protection, emergency lighting, and fire door supervision.

Rochester Gas and Electric Corporation has a fire penetration seal program at Ginna Station, which ensures that all penetrations required to be sealed to specific hourly ratings are identified, sealed, tagged, and maintained in good condition.

9.5.1.1.3 Safe Shutdown Criteria

In February 1981, the fire protection rule (10 CFR 50.48 and Appendix R to 10 CFR 50) became effective, which promulgated criteria related to the safe shutdown capability following a potential fire and other fire protection features. The evaluation of the fire protection system against the safe shutdown capability criteria is discussed in Section 9.5.1.4.

9.5.1.2 System Design

9.5.1.2.1 General

Fire detection instrumentation is located in all areas of the plant containing safety-related equipment and in areas containing large amounts of combustible or flammable materials. Actuation of fixed suppression systems and early warning alarms are provided by these detectors.

Normal fire protection is provided by fixed water deluge spray systems, fixed sprinkler systems, fixed Halon 1301 systems, hose lines, and portable and wheeled extinguishers suitably located in the required areas.

Water to the fire suppression system is supplied, via a header, by two fire pumps. The source of water is Lake Ontario. The yard loop and fire hydrants are supplied by the town of Ontario water supply.

The fire protection system can be used as a backup for the service water (SW) system supply to spent fuel pool (SFP) heat exchanger A, the standby spent fuel pool (SFP) heat exchanger, motor driven auxiliary feedwater pumps (MDAFW), standby auxiliary feedwater pumps (SAFW), and the diesel generator lube-oil coolers and jacket water heat exchangers via temporary hoses.

Fire barriers are located throughout the plant to separate established fire areas from each other and also to separate certain safety areas from the remainder of the plant. These barriers are designed to stop a fire from propagating from one area to the other. All penetrations in these barriers are sealed with appropriate materials to match the requirements of the barrier. Fire areas have been defined based upon separation of equipment and cables to ensure that at least one path of safe shutdown systems is always available.

Routing and separation standards applicable to existing cables are those that were invoked at the time of cable installation. For more information, see Section 8.3.1.4.

Fire prevention and mitigation considerations have been included in the design of ventilation systems, drain systems, lighting systems, communication systems, electrical and instrument cables, layout and materials, and oil collection systems.

Fire prevention is controlled by administrative methods to prevent accumulation of combustible materials and to practice good safety methods.

9.5.1.2.2 Fire Detection and Signaling Systems

The plant has a protective signaling system which alarms locally in selected parts of the plant and transmits fire alarm, supervisory, and trouble signals to the control room. In addition to signals from fire detection devices in various rooms or ventilating systems, the system transmits signals indicating water flow in water spray or sprinkler systems, fire pump operation, fire pump trouble, and low fire water tank level or pressure. Fire alarms are initiated by the smoke and heat detectors and by water flow or pressure switches in the water fire suppression systems. Additional protection is available by the installation of tamper switches on all major valves, unless they are locked in position.

The signaling system is powered by the emergency power supply system and automatically transfers to a 4-hour battery backup supply if its normal power source is interrupted.

Fire detection and signaling systems are generally designed and installed in accordance with NFPA 72D.

Smoke detectors and/or heat detectors have been provided in every area that contains safety-related equipment. Some detectors provide early warning fire detection and notification only. Others provide fire suppression system actuation in addition to detection and notification. These detectors are supervised to detect and annunciate circuit breaks, ground faults, and power supply failures. Remote test panels, which allow remote testing of the sensitivity of the detectors, are installed in the vicinity of smoke detectors that are difficult or hazardous to reach.

Periodic inspection and surveillance tests of the fire detection devices are in accordance with NFPA 72E and Technical Requirements Manual (TRM) section 3.3.4. The list of instruments required to be operable for fire detection and suppression systems actuation and their locations are shown in the TRM.

Fire alarm signals are provided as an integral part of the fire suppression systems to indicate an alarm in case of equipment malfunction, tampering, or in case of fire in any protected area. Additional audio and visual alarms and operating switches are provided in the control room, together with such pressure gauges, test, and reset switches as are required to completely monitor the fire protection system. The fire alarm signals in the control room are distinctive from other equipment alarms.

9.5.1.2.3 Fire Suppression Systems

Fire suppression is provided by fixed water spray and sprinkler systems, fixed gas systems, hose lines, and portable and wheeled extinguishers suitably located in the required areas. The water systems associated with the fire protection system are shown in Drawings 33013-1989 through 33013-1993. The fixed gas systems for the relay and multiplexer (MUX) rooms are shown in Drawing 33013-1242.

9.5.1.2.3.1 Water Supply

The fire protection water supply for the automatic and manual water suppression systems and hose stations inside the plant is pumped from Lake Ontario.

A fire header of sufficient size is provided to deliver an adequate quantity of water throughout the plant at a pressure of no less than 75 psi at the highest nozzle. The water supply for the fire hydrants on the yard fire main are supplied with water from the Town of Ontario. The yard hydrant system can be used as a backup to some of the fixed protection systems and all of the inside hose stations through wall hydrants in four locations (*Reference 18*). Drawing 33013-1607 shows the fire protection system yard loop (yard fire main). See also Section 9.5.1.2.3.5.

9.5.1.2.3.2 Fire Pumps

The water supply is delivered by a combination of two vertical shaft centrifugal fire pumps located in the screen house. Both pumps take suction from the circulating water intake. One pump is diesel-engine driven and the other is electric-motor driven. Each pump has a design rated minimum output of 2000 gpm at 125 psig, which is adequate to meet the largest anticipated water demand (*Reference 18*).

An automatic sprinkler system supplied by the yard fire main is provided in the area of the screen house that contains the two fire pumps. A curb has been installed around the diesel fire pump and the diesel oil storage tank to control any diesel oil leaks. The curbed area is equipped with a floor drain which drains to a holding tank buried outside the screen house.

A 15,000-gal pressure tank (10,000 gal of water) and a 120-gpm centrifugal jockey pump maintain system pressure at a minimum of 100 psig. When the system pressure drops below the nominal 95 psig setpoint (plus or minus 5 psig) the electric-motor-driven fire pump starts. If the pressure drops below the nominal 85 psig setpoint (plus or minus 5 psig), the diesel-driven fire pump starts.

An automatic controller is located with each fire pump. Each pump can be manually started from the control room or at the individual controller. Each pump can be manually stopped at the controller. In addition, the electric-driven fire pump can also be manually stopped by opening a circuit breaker located in the screen house near the fire pumps. Pump running, water flow, and pump power loss or engine trouble signals are annunciated in the control room as well as at the individual pump controllers. The fire relay panel provides these signals for the control room alarms and indications and start signals to the pumps on system pressure drop and on water flow in the fixed fire suppression systems served by the pumps.

The diesel fire pump is provided with an engine coolant heater and filter. The function of the heater is to raise the engine block temperature to a level at which the engine can start more easily and which would result in reduced wear on engine components. The coolant filter removes corrosion particles from the engine coolant.

The diesel fire pump engine is started by redundant 24-V batteries. The batteries are maintained fully charged and ready for service by an automatic dual battery charger operating in the float mode. The charger can charge one battery on high rate while maintaining the other battery on float or charge both batteries on high rate simultaneously. The charger automatically switches from float to high rate and back in order to recharge the batteries when necessary. The 120-V ac power is supplied to the battery charger from a screen house lighting panel.

An analysis was performed, which determined that the fuel consumption rate for the original diesel fire pump at full load is approximately 14.9 gal/hr. This analysis also cited that the capacity of the diesel fire pump fuel storage tank is 275 gal. The original fire pump was replaced in 1995. Fuel consumption for the installed diesel fire pump is approximately 13.1 gal/hr (*Reference 19*). Testing performed with the completion of the fire pump upgrades in 2003 determined that actual fuel consumption was approximately 12.0 gal/hr.

Specific procedures covering the diesel fire pump testing and maintenance include battery surveillance, testing of diesel oil in the day tank, and the requirement that the diesel engine be operated for a minimum of 15 minutes each month.

9.5.1.2.3.3 Piping and Valves

A separate 10-in. discharge line from each fire pump supplies the 8-in. and 10-in. interior loop main. All automatic and manual fixed water suppression systems and interior hose stations are supplied by this loop main. Outside screw and yoke gate valves subdivide the loop into a number of sections so that a single section can be isolated without impairing the entire loop. The design is such that isolation of a section of fire water piping system does not cause a loss of both the fixed suppression system protection and the manual hose coverage for the same area, with the exception of the service building. For the service building, use of manual hose lines from the exterior yard main provides backup suppression capability. Sectional valves, which are locked in the open position, are provided on the exterior yard main to allow the loop to be subdivided into a number of sections so that a single section can be isolated without impairing the entire system. Valves controlling water flow into sprinkler or deluge systems are locked open and/or are provided with electrical supervision (valve tamper switches). Sectional valves on the interior loop and valves controlling fire pump discharge are locked open and/or are provided with electrical supervision (valve tamper switches).

When not required for fire suppression, the electric-driven fire pump can be aligned to supply water to the traveling screen wash header at a pressure higher than service water pressure. The purpose of this spray wash system is to remove debris from the traveling screens when high debris conditions exist. The high pressure spray wash (HPSW) system is manually operated, and encompasses piping, two manual gate valves, an automatic isolation valve and a check valve which cross-connects between the fire suppression system test line and the main traveling screen wash header supply line downstream of the safety-related service water non-

essential load isolation motor-operated valves. Since the electric-driven fire pump secondary function is to supply the high pressure spray wash (HPSW) system only when plant conditions warrant its use, upon any automatic actuation of the electric-driven fire pump via a fire suppression system demand, the high pressure spray wash (HPSW) will automatically be isolated such that the primary function of supplying the fire suppression system can be satisfied.

9.5.1.2.3.4 Fire Hydrants

Yard fire hydrants are provided at approximately 250-ft intervals around the exterior of the plant. The lateral to each hydrant is controlled by a key-operated (curb) valve. Threads on hydrant outlets and hose couplings are compatible with those of fire departments which serve the plant. Impact barriers protect those fire hydrants and post-indicator valves which are located within 25 ft of roadways.

The ground area surrounding each exterior hydrant is graded to provide a clearance of at least 12 in. between the ground and the center of the lowest hydrant port.

Fire-fighting equipment is housed within hose houses. Administrative procedures cover snow removal operations and inspection of all outdoor fire hydrants for drainage immediately prior to freezing winter weather and for proper function immediately after the winter season. A yard hydrant on the southeast corner of the yard loop provides backup fire suppression capability for the transformers and primary fire suppression capability for the standby auxiliary feedwater building.

A dry hydrant assembly, located west of the **screen house**, provides capability to draft Lake Ontario water via the use of an offsite fire department pumper truck if needed.

9.5.1.2.3.5 Yard Loop

The fire protection system yard loop (yard fire main) is shown in Drawing 33013-1607. The yard loop supplies water to the yard fire hydrants and as a partial backup to the water suppression systems inside the plant (***Reference 18***). The yard loop provides a backup source of cooling water if service water (SW) is lost. It provides a backup to the condensate storage tanks for feedwater to the motor-driven (MDAFW) or turbine-driven (TDAFW) auxiliary feedwater pumps. It provides a backup to the condensate test tank for feedwater to the standby auxiliary feedwater pumps (SAFW). It can be used to provide cooling water to the emergency diesel generators. It provides an alternative source of cooling to the component cooling water (CCW) heat exchangers (under emergency, beyond design basis conditions only). The yard loop is equipped with manual isolation gate valves, as shown in Drawing 33013-1607, to provide segment isolation in the case of line failures. The yard loop is supplied water from the town of Ontario water system.

9.5.1.2.3.6 Interior Hose Stations

A total of 42 interior hose stations, each equipped with 100 ft of 1.5-in. diameter UL-approved municipal fire hose, are provided to protect various areas of the plant. The nozzles are 1.5-in. fog nozzles designed specifically for use in electrical fires and have a fog pattern range from 30° to 90° with no straight stream capability. A list of all available hose station locations is provided in Table 9.5-1. Operability and surveillance requirements for those hose

stations required to be operable are specified in the Technical Requirements Manual (TRM) Section 3.7.4.

9.5.1.2.3.7 Water Suppression Systems

Water suppression systems include water spray systems and water sprinkler systems with open or closed-head nozzles and sprinkler heads. The water suppression systems meet the design installation requirements of NFPA 13 and/or NFPA 15. Each sprinkler system has an outside screw and yoke shutoff valve or other suitable fire protection service listed isolation valve. All control valves for spray or sprinkler systems are electrically supervised with alarms in the control room or are locked in the proper position. Other important valves on the water supply are either electrically supervised or locked in the proper position. The water flow rates follow NFPA 15 guidelines. The water suppression systems and the areas covered are tabulated below.

Automatic water spray systems (which can also be manually actuated) provide protection for

a. The turbine lube-oil system in the turbine building.

b. The hydrogen seal-oil system in the turbine building.

c. The oil storage room in the turbine building.

d. The **oil-filled** transformers outside the turbine building.

e. The cable trays in the screen house.

f. The cable tunnel.

g. The charcoal filter unit in the auxiliary building ventilation system (ABVS).

h. Control room-turbine building wall.

i. The cable trays in the air handling room.

Manually actuated water spray systems provide protection for

a. The turbine-driven auxiliary feedwater pump (TDAFW) and feedwater pump oil tank area.

b. The condenser pit area.

c. The relay room.

The relay room water suppression systems serve as backup to the automatic Halon system that provides primary protection.

Automatic preaction sprinkler systems provide protection for

a. The cable entrance area at the auxiliary building.

b. The cable tray area in the basement of the auxiliary building (elevation 235 ft 8 in.).

c. The cable tray area at elevation 253 ft 6 in. of the auxiliary building.

d. The cable tray area in the intermediate building.

e. The diesel generator rooms.

The sprinkler systems for these areas have closed-head sprinklers with preaction trim on the deluge valves in accordance with NFPA 13.

Automatic sprinkler systems provide protection for the following.

a. The service water (SW) pumps in the screen house.

b. The fire pumps in the screen house.

c. The turbine island.

d. The service building.

e. The technical support center diesel room.

f. The turbine building mezzanine office and shop areas.

g. **GE Betz water treatment trailers and vestibule.**

An automatic and manual water curtain is provided for protection of the wall between the turbine building and the control room (superwall). The design of the water curtain is in accordance with NFPA 15. The system is actuated by heat detection.

Closed-head, close-spaced sprinklers are installed around the perimeters of the east and west stairwells and the equipment hatch, at the ceiling level of the auxiliary building mezzanine, as water curtain fire barriers to prevent the spread of fire between the mezzanine and operating levels. The sprinkler systems are wet pipe systems with automatic sprinkler heads rated at 165°F, which conform to the NFPA 13 standard temperature rating of 135°F to 170°F.

The containment postaccident charcoal filter units are protected with a water dousing system from the containment spray header, as described in Section 6.5.1.2.2.5.

The service building interior, including storage areas, shop areas, offices, locker rooms, and all rooms having combustible material, is protected by automatically operating wet-pipe sprinkler systems, with exterior water gong, which provides a local alarm annunciation at the north exterior of the building and indication in the control room.

The turbine-driven auxiliary feedwater pump (TDAFW) is protected with a water spray system consisting of six spray nozzles (Grinnell Mulsifyre Projector Type S-1 40-15) located in an array above the equipment. The north center and northwest corner nozzles are partially blocked by existing auxiliary feedwater piping in the area. An analysis was performed which demonstrated that the original design had sufficient margin such that the existing configuration met RG&E's original criteria of 0.5 gpm/ft^2 water spray density and exceeds the NFPA 15 general range of 0.2-0.5 gpm/ft^2.

9.5.1.2.3.8 Gas Suppression Systems

Total flooding automatic Halon 1301 extinguishing systems are provided in the relay room, multiplexer (MUX) room, and technical support center PPCS/SPDS computer room. The systems are designed in accordance with NFPA 12A-1980, Section 1.5.4, to maintain a Halon concentration of 5% for at least 5 minutes following delivery (sufficient time to allow effective emergency action by trained personnel). Ionization type smoke detectors in each area

alarm and annunciate in the control room. Where appropriate, a reserve supply of Halon 1301 permits prompt restoration of automatic protection following a system discharge. The Halon fire extinguishing systems are controlled by electronic control systems that are interfaced with the station fire detection system. The control system coordinates the fire detection system with local alarm actuation, air conditioning and ventilation shutdown as appropriate, electrical power disconnection as appropriate, and Halon discharge. In addition to automatic activation, Halon can be released using local manual pull stations or by operation of manual key switches on the fire control panels in the main control room. Halon 1301 storage cylinders are weight tested semiannually. The relay room and MUX room systems are shown in Drawing 33013-1242.

9.5.1.2.3.9 Portable Fire Extinguishers

Pressurized water, dry chemical, carbon dioxide portable extinguishers are distributed throughout the plant in accordance with the provisions of NFPA 10.

9.5.1.2.3.10 Wet Chemical Suppression System

An Ansul wet chemical suppression system has been installed in the cafeteria at the south end of the service building. This system has both automatic and manual actuation capabilities. In addition, actuation of the kitchen hood system will alarm in the guard house on the Gamewell Fire Panel, activate local horn and strobes, and de-energize the fryer and grill in the kitchen area of the cafeteria. This system is UL-300 rated and the cylinder containing the wet chemical agent is of a 3 gallon capacity. The system is installed to NFPA 96, "Standard for Ventilation Control and Fire Protection of Commercial Cooking Operations."

9.5.1.2.4 Other Design Considerations

9.5.1.2.4.1 Smoke Removal

The air handling systems of the ventilation systems are capable of exhausting volumes of smoke directly to the outside.

In addition, three portable smoke ejectors, each with 5000-cfm capacity, are provided for smoke removal. Flexible hose sections are provided to channel smoke and hot gases through the buildings.

9.5.1.2.4.2 Breathing Equipment

At least 10 self-contained breathing units dedicated to emergency use are provided. Each breathing unit has one spare bottle. The plant has the capability to supply breathing air to 10 people for 6 hours at the rate of two (1.0 hour) bottles per person per hour. A compressor and cascade system are provided onsite to supply the breathing air.

9.5.1.2.4.3 Control Building Ventilation

The control building ventilation system is designed to provide a safe, controlled environment for the control room, relay room, multiplexer (MUX) room, and battery rooms under all required conditions, including high- and moderate-energy line breaks outside containment, as

well as small fires in the relay room or control room. Control building ventilation systems are described in Sections 3.11.3.5, 6.4, 8.3, and 9.4.9.2.

9.5.1.2.4.4 Reactor Coolant Pump Motor Oil Collection System

The reactor coolant pump motor oil collection system consists of a package of splash guards, drip pans, and enclosures assembled as attachments to the reactor coolant pump motor at strategic locations to preclude the possibility of oil making contact with hot reactor coolant system components and piping. Any leaking oil is drained from each individual pump to its own collection tank, which is capable of handling the entire oil inventory of the motor. Strainers are placed at the drain of each drip pan or enclosure. The oil collection components are designed and attached to preclude dislodging during a seismic event.

9.5.1.2.4.5 Floor Drains and Curbs

Safety-related equipment is mounted on pedestals and floor drains provided in these areas are generally adequate to carry off fire water and prevent safety-related equipment from being flooded with standing water. In areas such as the control room, where floor drains are not provided, fire water will be drained out through door openings.

Curbs are provided in the screen house to prevent water or flammable liquid from flowing into the basement where both divisions of safety-related cables are routed. Additional curbs are provided around the diesel-driven fire pump area in the screen house.

A barrier has been installed around the turbine lube-oil reservoir area to contain possible oil spillage. The capacity of the enclosed area is large enough to retain the entire contents of the lube-oil system plus 10% margin for fire water.

Where drains from safety-related areas are tied into drains from areas which contain a large quantity of flammable liquid, backflow protection is provided to prevent possible spread of a liquid fire via the drain system *Reference 8*.

9.5.1.2.4.6 Lighting Systems

See Section 9.5.3.

9.5.1.2.4.7 Communications

There are three communication systems within the plant. The primary system is the combination paging and party system; in addition, there is a sound powered phone system and a radio paging system.

The sound powered system is hard wired with separate wires from the combination paging and party system. The radio paging system provides communication with areas inside the containment with the help of a radio antenna mounted in the containment. Additionally, a repeater located in the yard area allows for greater flexibility with radio communications. There is adequate redundancy with these three systems to ensure good communications throughout the plant during any fire emergency (see Section 9.5.2).

9.5.1.2.4.8 Electrical Cable Insulation

The cable insulation used at Ginna Station includes Kerite, oil-based rubber, neoprene, and polyvinyl chloride. The cables have, as a minimum, passed the ASTM and UL horizontal and vertical flame tests. Power cables and polyvinyl chloride control cables have passed the Consolidated Edison Bonfire Test. The majority of the electrical cables were purchased and installed prior to the publication of the IEEE 383 standard for flame testing of electrical cables; however, the potential combustion products for the materials used at the station have been evaluated from generic test reports and do not exhibit an unusual or significantly hazardous nature. All cables used for modifications meet IEEE 383 criteria unless specifically excepted. The spent fuel pool (SFP) bridge crane motive and control power cable is payed in and out from a spring-loaded storage reel assembly. Cable meeting IEEE 383-1974 flame retardant requirements and meeting the flexing duty requirements of the bridge crane cable was not available at the time replacement was required. The replacement cable was reviewed and it was determined that the proposed replacement would not adversely impact existing 10 CFR 50 Appendix R compliance methods or options used to maintain compliance (*Reference 7*). This determination will be made whenever it is impracticable to meet IEEE-383 criteria for cables used in modifications.

9.5.1.2.4.9 Fire Barriers

The fire hazards analysis submitted to the NRC in February 1977 (*Reference 2*) identifies the fire barriers in the plant and the requirements for maintaining their integrity. These barrier requirements were determined by the fire loadings calculated for each area subject to a potential fire hazard. As a result of this analysis, several design modifications were implemented at the plant including upgrading of the rating of original barriers and installing new barriers. The updated Ginna Station Fire Protection Program Report was completed and provides a regularly updated fire hazards analysis of the station.

Additional definition of fire areas and barriers and analysis of fire zones were conducted as part of the 10 CFR 50, Appendix R, review effort. The addition of the water curtain around the perimeters of the stairwells and equipment hatch at the ceiling level of the auxiliary building mezzanine floor is a part of this effort. See Section 9.5.1.2.3.7. Also, 3-hour-rated dampers were installed in ducts penetrating these fire areas. New fire barrier cabling wraps were installed in battery room 1B, several cables for the equipment in the charging pump room that is located in the auxiliary building, the intermediate building, and the containment. The cable wraps inside containment are for radiant energy shield purposes. The fire barrier inside the B Diesel generator cable vault was upgraded with materials capable of three-hour rating. It is contructed of clay masonry bricks and mortar. A three hour rated fire damper, DGVB-85, was also installed in the north wall of the brick enclosure (*Reference 21*). Penetration seals in this barrier were also sealed with approved materials. The charging pump room barriers were upgraded to provide three-hour rated resistance. Fire barriers associated with power and instrument cable systems are discussed in Section 8.3.3.

Fire protective coatings have been applied to the structural steel members forming or supporting a designated fire barrier. In this regard, the structural steel roof beams and a column that supports the roof of the A and B battery room and the floor of the relay room are provided

with a fire protective coating, which will ensure that adequate margins of safety will be maintained for at least 1 hour during a fire emergency.

9.5.1.2.4.10 Electrical Cable Penetrations

The fire seals installed at Ginna Station fall into two major categories:

a. Seals installed in 1975 using BISCO SF-20 silicone room temperature vulcanizing foam rubber.

b. Seals installed since September 1979 using Dow Corning **3-6548** silicone room temperature vulcanizing foam rubber.

The adequacy of several fire endurance tests and their applicability to cable tray and conduit penetration fire seals has been demonstrated in a submittal to the NRC in June 1980, (*Reference 8*) with the conclusion that the seal designs at the station are either similar to or more conservative than the seal designs tested by the ASTM E-119 fire test method for a 3-hour rating. The NRC concurred with the evaluation (*Reference 4*). NRC Information Notice 88-04 alerted licensees that some fire barrier penetration seal designs may not be adequately qualified for the design rating of the penetrated fire barriers. As part of RG&E's review in response to Information Notice 88-04, a program was established to evaluate fire barrier penetrations against a tested configuration and examine the qualification test documentation. Branch Technical Position (BTP)-APCSB 9.5-1 requires that cable and cable tray penetrations of fire barriers (vertical and horizontal) be sealed to give protection at least equivalent to that of the fire barrier. Although not specifically stated in APCSB 9.5-1 that penetration designs must be qualified by tests, RG&E proceeded with this program in order that the penetrations would continue to meet a tested configuration, when being maintained or involved in a plant modification, thereby ensuring the barrier would not be degraded.

For fire barrier penetration seals for which it is not possible to achieve a duplication of a specific tested configuration, appropriate compensatory measures are taken, such as posting fire watch patrols when required by the Technical Requirements Manual (TRM) section 3.7.5, temporarily repairing and qualifying the penetration until it can be reworked, and performing technical evaluations to demonstrate that the penetration meets an equivalent level of protection. Guidance from Generic Letter 86-10 is employed in these cases.

9.5.1.2.4.11 Piping and Duct Penetrations

Piping penetration of fire barriers are either poured in place or sealed by one of the following methods: grout, silicone RTV foam seals, or flexible reinforced silicone-rubber boots. The piping and duct penetrations have fire resistance ratings commensurate with the fire hazards on either side of the penetration determined by the fire hazards analysis (*Reference 2*). The fire rating adequacy of the seals was demonstrated in a submittal of fire test reports to the NRC in June 1980 (*Reference 8*). Based on the data of these reports, the NRC concurred that the piping and duct penetration seals provide adequate resistance to prevent a fire from propagating through the rated fire barriers (*Reference 4*).

9.5.1.2.4.12 Cable Separation

The design and construction of Ginna Station predates current industry standards of physical separation. The criteria and design features related to cable separation at the plant are discussed in Section 8.3.1.4. Cable separation as it relates to the safe shutdown capability of the plant under a fire emergency is discussed in the references cited in Section 9.5.1.4.

9.5.1.2.4.13 Spray Shields

Water spray shields are provided in the intermediate building over the control rod drive motor control center and switch-gear, and in the auxiliary building over switchgear, motor control centers, and other electrical equipment to help protect this equipment from damage or undesirable effects from the application of fire water.

9.5.1.2.4.14 Construction Joints

The construction joints between containment and the surrounding buildings provide fire resistance commensurate with the hazards in the area.

9.5.1.2.5 Administrative Controls

The administrative controls for fire protection consist of the fire protection organization, fire brigade training, the controls over combustibles and ignition sources, the Plant Fire Response Plans for fighting fires, and the quality assurance provisions for fire protection. These controls are discussed in Sections 9.5.1.2.5.1 through 9.5.1.2.5.6. The fire protection program is in conformance with the guidelines of Nuclear Plant Fire Protection Functional Responsibilities, Administrative Controls, and Quality Assurance and is updated in the Fire Protection Plan as indicated in *References 9* and *10*.

9.5.1.2.5.1 Organization

The fire protection organization defines the organizational responsibilities and lines of communication between the various positions involved in the fire protection program, the qualification requirements of the key positions in the fire protection program, and the composition of the fire brigade. The fire protection organization encompasses positions extending from the Vice President, Nuclear Operations Group, to the Station Shift Supervisor. The organization includes dedicated Fire Protection System Engineers and a Fire Protection Program Manager. These management and staff positions are responsible for formulation, implementation, and assessment of the fire protection program.

9.5.1.2.5.2 Fire Brigade

A fire brigade of five members shall be maintained onsite at all times. This excludes the two members of the minimum shift crew necessary for safe shutdown. The fire brigade composition may be less than the minimum requirements for a period of time not to exceed 2 hour to accommodate unexpected absence of fire brigade members provided immediate action is taken to restore the fire brigade to the minimum requirements.

9.5.1.2.5.3 Fire Brigade Training

A training program based on the 1975 edition of NFPA Code 27 is conducted for the fire brigade under the direction of the Nuclear Training Department. NFPA 600, the current standard, is used as a guidance document only. The fire brigade training program consists of classroom instruction, practice in fire fighting, and fire brigade drills. The classroom instruction is provided quarterly and includes instruction in the types of fires that could occur in the plant, their particular hazards, location and use of the plant fire-fighting equipment, and fire-fighting strategies and techniques. Brigade members participate annually in training sessions in actual fire extinguishment; at quarterly intervals the station conducts preplanned fire drills. All drills are recorded and evaluated both for effectiveness and personnel response.

Fire brigade training is provided for all members. In addition to the training and drills conducted onsite, the program includes 8 hours per year of hands-on training for each brigade member at the Niagara Mohawk training facility in Oswego, New York, a facility which is used to train members of the local paid and volunteer fire departments. Additional training is also conducted at local fire training facilities as necessary. The local fire department is approximately 4 miles offsite and is included in an annual training session onsite to ensure its ability to respond quickly and effectively to fire situations at the plant. Other surrounding departments periodically respond to the site and participate in this drill. A good working relationship has been established between the plant staff and these fire departments.

9.5.1.2.5.4 Control of Combustibles

Administrative controls have been established to limit the amount of combustibles to which a safety-related area may be exposed. These controls include housekeeping procedures, periodic inspections to determine the effectiveness of housekeeping practices, procedures and guidelines for use and storage of combustible materials, and a review of proposed work activities to identify potential transient fire loads to evaluate the need for additional fire protection provisions in the work activity procedure. Administrative procedures have been established to ensure that all wood products such as boxes, staging forms, construction lumber, shelves, and benches used in safety-related areas are fire-retardant treated or administratively controlled via transient combustible control permits and biweekly tours.

9.5.1.2.5.5 Control of Ignition Sources

Administrative controls have been established to protect safety-related equipment from fire damage or loss resulting from work involving ignition sources. These controls include station procedures which require a work permit to perform welding, grinding, or flame cutting operations and the posting of a fire watch during such operations, and controls that prohibit smoking in safety-related areas and in areas containing flammable or potentially explosive materials. Administrative controls have been established to prohibit the use of open flame or combustion-generated smoke for leak testing.

Administrative controls have been established to ensure that before issuing the open flame, welding, and grinding permit, a foreman or supervisor trained in basic industrial fire fighting and fire prevention physically surveys the area where the work is to be performed and establishes that the following precautions have been accomplished:

a. All movable combustible material below and within a 35-ft radius of the cutting, welding, grinding, or open flame work has been removed.

b. All immovable combustible material below and within a 35-ft radius has been thoroughly protected by asbestos curtains, metal guards, or flameproof covers, and fire extinguishers, hose, or other fire-fighting equipment are provided at the work site.

9.5.1.2.5.6 Fire-Fighting Procedures

Procedures have been established to prescribe the actions to be taken by the individual discovering the fire, the control room operators, and the members of the fire brigade.

Plant Fire Response Plans covering fire-fighting strategies for safety-related fire areas and areas presenting a hazard to safety-related equipment have been developed and documented. Such plans include a discussion of the combustibles, appropriate extinguishing agents, location of nearby fire-fighting equipment, likely approach routes, location and protection of safety-related and necessary auxiliary equipment, fire-fighting hazards, handling of radiological and toxic hazards, and methods to ventilate the fire area. The fire brigade members responsibilities associated with the prefire plans have been delineated.

A written agreement with the local fire company is maintained to ensure adequate support for a fire emergency. Members of the local fire company have received training in basic radiation principles, typical radiation hazards, and precautions to be taken in a fire involving radioactive materials in the plant; they also participate in fire brigade drills at least once per year. Station procedures have been established to provide for the recall of off-duty fire brigade members to assist the on-shift brigade in the event of a fire emergency.

9.5.1.2.5.7 Quality Assurance

The design, procurement, installation, testing, and administrative controls for the fire protection program are controlled in accordance with Ginna Station Nuclear Directive, implementing the quality assurance provisions contained in Branch Technical Position 9.5-1, Appendix A.

9.5.1.3 Operability and Surveillance Requirements

The Technical Requirements Manual (TRM) sections 3.3.4 and 3.7.1 - 3.7.6 list the operability requirements for the fire protection systems, required actions to be taken when equipment is inoperable, and surveillance requirements. These requirements were previously located in the Technical Specifications, but were removed in accordance with Generic Letter 86-10, "Implementation of Fire Protection Requirements," and Generic Letter 88-12, "Removal of Fire Protection Requirements From Technical Specifications", and located within the UFSAR. The operability and surveillance requirements were subsequently relocated to the TRM. The bases for the requirements listed in the TRM sections above are described in Sections 9.5.1.3.1 through 9.5.1.3.4 below.

9.5.1.3.1 General

The fire protection system has the capability to extinguish any probable fire which might occur at Ginna Station where suppression systems are installed and/or through the use of

manual hose stations and/or exterior yard hydrant lines. The system is designed in accordance with the standards of the National Fire Protection Association.

Prefire fighting strategies have been developed for fighting fires in all the plant areas and are contained in the Plant Fire Response Plans.

Fire prevention is controlled by administrative methods to prevent accumulations of combustible materials and to practice good safety methods. Periodic practice exercises, such as fire brigade drills, are employed to ensure plant personnel are familiar with the proper corrective procedures.

Sufficient tests are conducted to be certain that fire detection instruments and associated circuitry are operable such that fires in areas that would jeopardize the safe shutdown of the plant are detected.

9.5.1.3.2 Fire Detection System

Fire detection instrumentation is located in all areas of the plant containing safety-related equipment and in areas containing large amounts of combustible or flammable materials. Actuation of fixed suppression systems and early warning alarms are provided by these detectors.

The list of instruments required to be operable for fire detection and their locations are shown in the Technical Requirements Manual (TRM) Table 3.3.4-1.

9.5.1.3.3 Fire Suppression System (Water, Spray and/or Sprinklers, Halon, Fire Hose Stations, and Yard Loop)

Operability and surveillance requirements for these systems is included in the Technical Requirements Manual (TRM) sections 3.7.1 (Water Sources), 3.7.2 (Spray and Sprinkler Systems), 3.7.3 (Halon Systems), 3.7.4 (Hose Stations), and 3.7.6 (Yard Loop). Normal fire protection is provided by a fixed-fire fog system, fixed Halon 1301 system, sprinklers, hose lines, and portable and wheeled extinguishers suitably located in the required areas.

The fire suppression water system consists of Lake Ontario water supply, two pumps, and distribution piping with associated sectionalizing control or isolation valves. Valves include valves between the fire pumps and the first valve ahead of the water flow alarm device on each sprinkler or spray system riser.

Water to the fire system is supplied via the header by two vertical, centrifugal fire pumps of 2000 gpm mimimum capacity each. One of these pumps is driven by an electric motor and the other by a combustion engine. Both are automatic starting through fire pump controllers with indication, alarm, and manual starting from the central control room auxiliary benchboard. The combustion engine local fuel supply capacity is designed for a minimum of 8 hours of operation.

A fire header is installed of sufficient size to deliver an adequate quantity of water throughout the plant at a pressure of no less than 75 psi at the highest nozzle.

The header system is normally pressurized through the use of a hydro-pneumatic tank using house service air and having an active water capacity of 10,000 gal. Loss of header pressure and/or opening of any deluge system activates the fire pumps and the alarm system.

A backup fire suppression water system would be used to provide protection in the event the fire suppression water system were inoperable. A backup system could, for example, be comprised of a backup pump and yard hydrant system supplying water to wall hydrants or other equipment or measures (refer to Section 9.5.1.2.3.1).

Readily accessible 1.5-in.-diameter UL-approved municipal fire hose lines and continuous flow type hose reels are distributed throughout the station so that all areas in the station are within 20 ft of a fog nozzle when attached to not more than 100-ft lengths of hose. All nozzles are 1.5-in. variable fog-off nozzles. An analysis was completed to document conformance to this section. It should be noted that exterior yard hydrants are required to be utilized to provide coverage in some plant areas. In the preparation of this document, hose stretch tests were performed as input to this analysis, to address the commitment identified in the NRC SER, dated February 14, 1979, Section 3.1.3.6.

The yard hydrant on the southeast corner of the yard loop provides the secondary fire suppression capability for the transformers and hydrant 13 provides the primary fire suppression capability for the standby auxiliary feedwater building.

The fire suppression water system testing will ensure the capability of the system to meet its requirements.

The Halon system is used to protect those areas that would be damaged by the use of water. The 90% of full charge pressure is based on a temperature of 70°F. Pressures at temperatures other than 70°F will be corrected by Chart ULE 2671, March 1, 1973, ANSUL 1301 Clean Agent Fire Control System Manual P/N17210-02.

9.5.1.3.4 Fire Barrier Penetrations

Operability and surveillance requirements for fire barrier penetration seals are included in the Technical Requirements Manual (TRM) section 3.7.5. Fire barriers are located throughout the plant to separate major areas from each other and also to separate certain safety-related areas from the remainder of the plant. These are designed to stop a fire from propagating from one area to another. All penetrations in these barriers are sealed with appropriate materials to match the requirements of the barrier.

Visual inspection of fire barrier penetration seals will be made to ensure the containment of any fire that may start until it can be extinguished either automatically or manually. There are no fire barriers that perform a pressure sealing function.

9.5.1.4 Safe Shutdown Capability

9.5.1.4.1 Safe Shutdown Requirements

The requirements for protecting safe shutdown systems and their respective components and associated circuits are specified in 10 CFR 50, Appendix R, and the NRC Generic Letter 81-

12. The objective of the requirements is to limit damage to safe shutdown systems resulting from an unmitigated fire to the extent that the ability to achieve safe shutdown is ensured. Rochester Gas and Electric submitted an evaluation report in January 1984 (*Reference 11*) describing alternative safe shutdown capability in accordance with Appendix R, Section III.G. This report was revised in October 1984 (*Reference 12*) and in January 1985 (*Reference 13*); the revisions included a request for twelve specific exemptions from the retrofit requirements of Appendix R, Section III.G. In safety evaluation reports of February 1985 (*Reference 14*) and March 1985 (*Reference 15*) the NRC accepted the alternative safe shutdown proposals and granted the requested exemptions. Thus, all areas of the plant either meet the retrofit requirements of Appendix R (as exempted) or are provided with acceptable alternative safe shutdown capability. In *Reference 16*, RG&E notified the NRC that the exemption listed as the first request in *Reference 15* was no longer required.

Subsequent to the implementation of the Appendix R modifications during the 1986 MODE 6 (Refueling) outage, the RG&E alternative safe shutdown report was revised (March 1986) to incorporate deviations from the original design and compliance methods. These revisions were in accordance with the previously approved safety evaluation reports mentioned above and with NRC guidance for reviewing compliance methods. The updated safe shutdown report is included in the Ginna Station Fire Protection Program Report (*Reference 17*).

9.5.1.4.2 Alternative Shutdown Capability

Alternative shutdown capability is provided for the control room, relay room, air handling room, battery rooms, cable tunnel, and auxiliary building basement/mezzanine. Alternative shutdown is accomplished independent of these areas by procedural means with required actions performed at local shutdown stations or locally at the equipment. These procedures are designed to ensure that the following shutdown functions would be available following a fire: reactivity control, primary system makeup control, primary system pressure control, decay heat removal, process monitoring, and support services. If a shutdown function could be potentially lost due to a fire, a procedure to restore the shutdown function is included. The procedure delineates the operator actions necessary to restore the lost function.

To ensure continued operation of the onsite diesel generators in the event of a fire, control circuits in the diesel generator A room are isolated so that fire damage in other fire areas cannot inhibit proper diesel control and operation. Also, sufficient control features have been provided so as to allow for local control of the 1A diesel generator. Alternative controls and instrumentation including start/stop controls; voltage and speed controls; voltage, current, and rpm indication are provided in the diesel generator A room. See Section 7.4.4 for a discussion of alternative shutdown instrumentation and control.

In addition to the actions necessary to restore or compensate for lost functions, the procedures for several areas also identify the fire's potential effect on other equipment not necessarily needed to provide a shutdown function and identify what, if any, operator actions should be taken. Further, the procedures provide the operators with the necessary guidance for initial plant cooldown and subsequent MODE 5 (Cold Shutdown). All necessary actions to achieve MODE 3 (Hot Shutdown) can be performed by onsite personnel. All necessary materials are stored onsite.

Procedures are provided for all fire areas where an unmitigated fire could disrupt needed shutdown functions. As an example, the procedure for the control room (which identifies the actions necessary to achieve and maintain MODE 5 (Cold Shutdown)) is discussed below.

9.5.1.4.3 Shutdown From Outside the Control Room

In the event of a control room fire that results in evacuation of the control room, safe shutdown capability is provided by a procedure that describes the operator actions necessary to achieve MODE 3 (Hot Shutdown) conditions. The procedure uses five plant personnel exclusive of the fire brigade and provides for local control of a charging pump, turbine driven auxiliary feedwater pump (TDAFW), and service water (SW) pump; local operation of a diesel generator; and local indications for process monitoring. Reactivity control, reactor coolant makeup control, and primary system pressure control will be provided by the charging system in conjunction with the refueling water storage tank (RWST) and the pressurizer safety valves. Initial decay heat removal will be provided by a turbine-driven auxiliary feedwater pump (TDAFW) and the atmospheric dump valves. The condensate storage tanks and service water (SW) will ensure a long-term supply of water for the auxiliary feedwater pump. Diesel generators and the service water (SW) system will provide the necessary support services. The process monitoring function will be provided by the following instrumentation: reactor coolant hot and cold temperature (A Loop), reactor coolant system pressure, pressurizer level, and steam generator pressure (Steam Generator A only), and level (Steam Generators A and B). Additionally, turbine-driven auxiliary feedwater flow and source range neutron monitoring are available.

9.5.2 COMMUNICATIONS SYSTEMS

A broad range of communications equipment is available at Ginna Station. Several systems are installed for communications between RG&E Emergency Centers, and for communications with outside agencies. Equipment is periodically verified operable by plant procedures. The use of particular types is specified in the appropriate implementing procedures as first choice and backup systems. Communications systems are tested periodically.

9.5.2.1 Public Address System

A special warbling tone on the GAI-Tronics page system is sounded from the control room to warn personnel of a site evacuation. Warning is immediate to all persons onsite. High noise areas have, in addition to the public address system, red warning lights with signs to direct personnel to evacuate. Special announcements on the page and special tones are used for other emergencies. The plant evacuation alarm, plant fire alarm, and plant attention signal are each distinct tones over the GAI-Tronics page system and are actuated from the control room by pushbutton or switch.

9.5.2.2 Telephone Systems

Communications between the control room, technical support center, emergency survey center, and other operations centers can be established using either telephone, two-way intercom, radio, or the plant public address system.

The telephone system at Ginna affords a great deal of flexibility and capacity. Calls can be received or made to either the Rochester telephone system or the Ontario telephone system. The telephone system has its own power supply located onsite which could maintain house phones independent of offsite lines. There are also Rochester direct lines and Ontario direct lines. During an emergency, phone usage can be controlled by an operator at the telephone system console located in the technical support center.

In case of an emergency, personnel not at the plant can be summoned using either the onsite system telephones or direct lines to the Ontario and Rochester systems. If necessary, control room personnel may use the direct lines to a Rochester located dispatcher who would then make the necessary offsite calls. A base radio transmitter in the control room may be used to call the electric line operator who can also call personnel to the plant. A sound powered phone system consisting of headsets, amplifiers, power supply, and wall-mounted jacks provides party-line two-way communications throughout the plant for system tests, etc.

9.5.2.3 Radio Systems

There are several radio frequencies available for use at Ginna Station. These frequencies are assigned to the fire brigade, security, operations, Appendix R usage, and radiation survey teams. The base stations and antennae are located for maximum transmission coverage of the areas of use. The security channel is monitored at central security and at the guardhouse. The radiation survey teams have operator capability at the emergency survey center, the technical support center, and the emergency operations facility recovery center. Fire brigade communications will be monitored in the control room. Portable radio sets are available for the use of survey teams in the field.

The Ginna control room also has a receiving and broadcasting station on a frequency which is monitored offsite by Energy Operations. A channel is available for indirect communication to the State Police, Monroe and Wayne County Sheriffs, and Wayne or Monroe County emergency operations facilities.

Portable low power hand radio sets are located in the technical support center to be distributed in the event of an emergency for backup or for mobile communications. Portable hand radio sets are also located in the emergency survey center for the use of survey teams. Offsite survey teams can communicate through these portable radio sets to a base station which may be set up at either the emergency survey center, technical support center, or emergency operations facility/recovery center. The base station is capable of operating with 12-V dc power (an automobile system) as an alternative power source. Additionally, a sufficient number of portable radio sets are available for Operation's use following an Appendix R worst-case fire scenario.

9.5.2.4 Offsite Communications

Notification to state and county emergency response organizations is available 24 hours per day. The State Warning Point is staffed by the New York State Emergency Management Office. Monroe County Office of Emergency Preparedness and Wayne County Office of Emergency Management answer the New York State Radiological Emergency Communications System (RECS) line during the work day. During nonbusiness hours, weekends, and

holidays, the RECS line is covered for Monroe County and Wayne County at their "911" centers.

At Ginna Station there are always control room personnel to originate calls. New York State has responsibility for communications to other counties which may fall within the ingestion exposure zone. Any contacts with Canada or Ontario Province would also be through the state agencies.

To contact appropriate offsite agencies the telephones would normally be used as discussed in Section 9.5.2.2, with direct lines or the onsite telephone system. If necessary, Energy Operations may be contacted as described above and instructed to notify the state police or sheriff and relay messages through their radio systems.

Communications with federal emergency response organizations consist of telephone contact to the Department of Energy, Brookhaven Radiological Assistance Program. This call would be made by the emergency coordinator. Their assistance may also be requested by the state or counties.

The NRC Emergency Telecommunications System (ETS) provides for essential emergency communications with the NRC and is described in Section 9.5.2.5.

Ginna Station uses the simulated control room in the training center instead of the actual plant control room for annual emergency plan drills. To support the use of the simulated control room for these drills, the GAI-Tronics page system, sound powered phone, onsite telephone system, New York State Radiological Emergency Communication system (RECS), and the NRC Emergency Telecommunications System (ETS) emergency notification link are installed in the simulated control room.

9.5.2.5 Emergency Communications With the NRC

Essential communications with the NRC during an emergency is by use of the Emergency Telecommunications System (ETS). The functions provided by the system include the emergency notification system, health physics network, reactor safety counterpart link, protective measures counterpart link, emergency response data system, management counterpart link, and the NRC Operations Center's local area network. Telephones for the ETS are located in the technical support center, emergency operations facility, control room, simulator, and the Senior Resident NRC Inspector's office. The available ETS functions vary by telephone location.

Additional information regarding emergency communications with the NRC is discussed in the Nuclear Emergency Response Plan.

9.5.3 LIGHTING SYSTEMS

Fixed emergency lighting units are provided in safety-related areas and other areas which contain fire hazards to facilitate emergency operations, manual fire fighting, and access to and egress from each designated fire area. The lighting units are 8-hour rated. In addition to the fixed lighting systems, portable battery-powered handlights are provided.

Ginna safe shutdown panels are located in several areas of the plant. The lighting at the safe shutdown areas has been determined to be sufficient to perform all required safe shutdown tasks. This determination was made by a lighting survey conducted in conjunction with 10 CFR 50, Appendix R, compliance efforts.

The control room normal and emergency lighting systems provide adequate illumination in accordance with the guidelines of NUREG 0700, Section 6. The control room normal lighting system is capable of functioning at all times, excluding loss of ac power, at which time the 125-V dc emergency lighting system is automatically turned on. The control room emergency lighting fixtures are fed from either the A or B station batteries. In the event of loss of either battery there is a transfer switch in the control room by which the operators can manually switch the emergency lighting feed from one train to the other. Should loss of either battery occur in the emergency lighting mode, an 8-hour-rated emergency light fixture located near the transfer switch shall remain functional to provide sufficient lighting to perform the transfer. The 125-V dc power supply up to the point of termination at the emergency lighting fixtures is Class 1E and Seismic Category I. The emergency lighting fixtures are standard. A prototype fixture has been seismically tested in accordance with IEEE 344-1975 to ensure continued operation of the fixtures in the event of an earthquake. In addition, an analysis of the seismically reinforced suspended ceiling has been performed to ensure that the ceiling, including the normal and emergency lighting fixtures, does not create a hazard to control room personnel or safety-related equipment during a seismic event.

A security lighting system along the fence at Ginna Station has been provided. The system has been designed to meet the requirements of ANSI 18.17, Industrial Security Plans for Nuclear Power Plants (see Section 13.6).

9.5.4 DIESEL GENERATOR FUEL OIL STORAGE AND TRANSFER SYSTEM

The diesel generator fuel oil storage and transfer system is shown in Drawing 33013-1239, Sheets 1 and 2.

The minimum permissible onsite fuel inventory is 10,000 gal (5000 gal for each diesel generator). This minimum diesel fuel oil inventory is maintained to ensure that both diesel generators can operate at their design ratings for 24 hours. This ensures that both diesel generators can carry the design loads of required engineered safeguards equipment for any loss-of-coolant accident conditions for at least 40 hours, or for one engineered safety feature train for 80 hours. Commercial oil supplies and trucking facilities exist to ensure deliveries of additional fuel oil within 8 hours.

Fuel oil is provided to each diesel engine by a 350-gal day tank located at the engine. When the engine starts, the engine-driven fuel pump provides fuel from the day tank. Each diesel generator day tank is normally supplied from its 6000-gal underground storage tank. A 480-V fuel oil transfer pump for each diesel engine pumps fuel oil at approximately 23 gpm at a discharge pressure of 15 psig from either storage tank to either day tank. A cross-connection allows each transfer pump to supply either day tank. The suction line to each fuel oil transfer pump includes a duplex strainer that can be serviced without interrupting flow. One fuel oil transfer pump has the capacity to supply both diesel generators at 110% load. The fuel oil consumption of one diesel generator is calculated to be 2.84 gpm at 110% load, including all

uncertainties. The plant process computer system provides alarms on high and high-high differential pressure across each duplex strainer and on high and low-low fuel oil level in each day tank.

A local control switch in the diesel room for the transfer pump has two positions. In RUN, the pump will run until the day tank is full, then a fill line valve closes and a bypass valve opens to recirculate back to the storage tank. When the level in the day tank decreases, the valves will reposition to supply the day tank. In AUTO, the transfer pump starts when its diesel is running and the level in the respective day tank falls to a low level. The pump continues to run until its diesel is stopped. Again when the diesel day tank is full, the fill line valve closes and the bypass valve opens. Low level in either day tank is alarmed in the control room. Heat tracing is provided to maintain the fuel oil temperature in exposed pump suction piping in the event of a loss of heat in the diesel generator rooms. The heat tracing is thermostatically controlled to maintain the fuel oil in the pipe above 40°F. This provides sufficient margin above the point at which this portion of the suction piping could be considered inoperable based on the cloud point of the fuel oil, **23°F.**

Watertight doors have been installed on the concrete manways of the underground diesel-oil storage tanks. These doors prevent the accumulation of water in the manways that might seep into the oil through the flanged manhole on the top of each storage tank.

The diesel generator fuel oil storage and transfer system surveillance tests and conditions for operation are provided in the Technical Specifications.

9.5.5 DIESEL GENERATOR COOLING SYSTEM

The diesel generator cooling system is shown in Drawing 33013-1239, Sheets 1 and 2.

The diesel generators are supplied with cooling water from the service water (SW) system. Service water (SW) is directed to the lube-oil cooler and jacket water coolers for each diesel generator. The service water (SW) lineup is made reliable by ensuring that the service water (SW) crossover valves remain open at all times. This ensures that no matter which service water (SW) pump is selected to automatically start during an emergency, and no matter which diesel starts, the diesel that is running will receive cooling water. The 1A and 1C service water (SW) pumps are powered from bus 18 which can be supplied by diesel generator 1A. A selector switch in the screen house allows selection of either pump to automatically start. The 1B and 1D service water (SW) pumps receive their power from bus 17 which can be supplied from diesel generator 1B. Another selector switch in the screen house is provided for this set of pumps' automatic start feature.

An alternative means for diesel generator cooling is provided via a valve installed in the service water (SW) cooling to each diesel generator. The valve allows the connection of fire hoses from a fire protection valve in the diesel generator room in case of failure of the service water (SW) pump during diesel generator operation.

The cooling water is heated by jacket water heaters. Below each diesel is a subbasement which contains the buswork for that diesel. To prevent flooding of this area, a vault pump is

provided for each diesel. This runs automatically as required to remove any accumulation of water.

9.5.6 DIESEL GENERATOR STARTING SYSTEM

The diesel generator starting system is shown in Drawing 33013-1239, Sheets 1 and 2.

Two 20-ft^3 air receiver tanks are provided to start each diesel. Each diesel generator air start system has a 480-V air compressor. Diesel generator 1A air compressor receives its power from the motor control center which can be supplied from diesel generator 1B. Diesel generator 1B air compressor receives its power from the motor control center which can be supplied from diesel generator 1A.

Each air system is utilized to crank the diesel with air to start the diesel within 10 sec. The compressors will automatically start at a nominal pressure of 230 psig to charge the receivers, and will automatically stop at a nominal receiver pressure of 250 psig. A relief valve set at 275 psig provides overpressure protection. Starting air from the air receiver tanks is initially supplied to two air regulators. The air regulators reduce the pressure to a nominal pressure of 130 psig to supply the air distributors. Air pressure required for starting the engine is 80 to 150 psig.

Additional testing performed during the 1992 MODE 6 (Refueling) outage demonstrated that with an initial pressure of 225 psig the air start system receiver tanks are sufficient to crank the diesels for a minimum of five starts without recharging the receivers and that the air start systems are capable of starting the diesels with a minimum air supply pressure of 80 psig.

Parallel dc-powered solenoid valves will open to admit air to the air start motor for each diesel. One solenoid valve is supplied from battery 1A and the other from battery 1B. The diesel air start systems can be cross-connected by two valves in series.

Periodic testing requirements of the diesel generator starting systems are provided in the Technical Specifications.

9.5.7 DIESEL GENERATOR LUBRICATION SYSTEM

A simplified diagram of the diesel generator engine lubrication system is shown in Figure 9.5-6. Lubrication of the engine is accomplished by a pre-lube pump and an engine-driven lube-oil pump. The engine must be kept prelubed and preheated to provide immediate starting. When the engine starts, the prelube pump and heater are deenergized and the engine-driven lube-oil pump provides oil flow.

9.5.8 DIESEL GENERATOR COMBUSTION AIR INTAKE AND EXHAUST

Fresh air for combustion is drawn into the engine through a filter and distributed to the cylinders by an air intake manifold. Turbocharging is used to increase flow or volume of air. This consists of a turbocharger driven by exhaust gases of the engine. Compressing the air with the turbocharger increases the temperature of the air. Since air intake temperature should be as low as possible for maximum operating efficiency, the air must be cooled before entering the cylinders. The system is shown in Drawing 33013-1239, Sheets 1 and 2.

REFERENCES FOR SECTION 9.5

1. Rochester Gas and Electric Corporation, Technical Supplement Accompanying Application for Full-Term Operating License, August 1972.

2. Letter from L. D. White, Jr., RG&E, to A. Schwencer, NRC, Subject: Fire Protection at R. E. Ginna Nuclear Power Plant, dated February 24, 1977.

3. Letter from D. L. Ziemann, NRC, to L. D. White, Jr., RG&E, Subject: Transmittal of Fire Protection Safety Evaluation Report (enclosure), dated February 14, 1979.

4. Letter from D. M. Crutchfield, NRC, to J. E. Maier, RG&E, Subject: Supplement 1 to Fire Protection Safety Evaluation Report, dated December 17, 1980.

5. Letter from D. M. Crutchfield, NRC, to J. E. Maier, RG&E, Subject: Supplement 2 to Fire Protection Safety Evaluation Report, dated February 6, 1981.

6. Letter from D. M. Crutchfield, NRC, to J. E. Maier, RG&E, Subject: Fire Protection, Ginna, dated June 22, 1981.

7. RG&E Appendix R Conformance Review, Ginna Station, Spent Fuel Pit Bridge Crane Cable, Number WR/TR 9020864, Revision 0, dated March 2, 1990.

8. Letter from L. D. White, Jr., RG&E, to D. M. Crutchfield, NRC, Subject: Fire Protection at R. E. Ginna Nuclear Power Plant, dated June 4, 1980.

9. Letter from L. D. White, Jr., RG&E, to D. L. Ziemann, NRC, Subject: Fire Protection at R. E. Ginna Nuclear Power Plant, dated May 15, 1978.

10. R. E. Ginna Nuclear Power Plant Fire Protection Plan, dated April 29, 1986.

11. Letter from J. E. Maier, RG&E, to D. M. Crutchfield, NRC, Subject: Transmittal of Appendix R, Alternative Shutdown System, dated January 16, 1984.

12. Letter from R. W. Kober, RG&E, to W. Paulson, NRC, Subject: 10 CFR 50, Appendix R, Alternative Shutdown System, Revision 1, dated October 4, 1984.

13. Letter from R. W. Kober, RG&E, to J. A. Zwolinski, NRC, Subject: Appendix R, Alternative Shutdown System, dated January 16, 1985.

14. Letter from J. A. Zwolinski, NRC, to R. W. Kober, RG&E, Subject: Safety Evaluation for Appendix R to 10 CFR Part 50, Items III.G.3 and III.L, dated February 27, 1985.

15. Letter from J. A. Zwolinski, NRC, to R. W. Kober, RG&E, Subject: Exemptions to Section III.G of Appendix R, dated March 21, 1985.

16. Letter from R. C. Mecredy, RG&E, to G. S. Vissing, NRC, Subject: Exemption to Section III.G of Appendix R, dated January 13, 1998.

17. Ginna Station Fire Protection Program Report, Volumes 1, 2, and 3.

18. Ginna Station, Design Analysis, DA-ME-2000-040, Revision 1, City Water Yard Loop Cross-Tie to Fire Yard Loop Hydraulic Calculation, dated September 8, 2003.

19. Ginna Station Design Analysis DA-ME-2001-031, Evaluation of Suppression System Flow Requirements, dated May 23, 2002.

20. Ginna Station Design Analysis DA-ME-93-108, Diesel Fire Pump Fuel Consumption Calculations, dated March 30, 2004.

21. Constellation Energy Design Analysis DA-ME-2003-018, Revision 1, Replacement of Appendix R Fire Barrier in the "B" Diesel Generator Vault, dated October 11, 2005.

Table 9.5-1
FIRE SERVICE WATER HOSE REEL LOCATIONS

Hose Reel Number	Building	Floor	Location[a]
1	Turbine	Basement	Elevator
2	Turbine	Basement	Battery room
3	Turbine	Basement	Diesel generator rooms
4	Turbine	Basement	Steam generator feedwater pumps
5	Turbine	Intermediate	Elevator
6	Turbine	Intermediate	4160 bus
7	Turbine	Intermediate	Air ejector
18	Turbine	Intermediate	5A heater
9	Turbine	Turbine	Elevator
10	Turbine	Turbine	Control room
11	Turbine	Turbine	North wall
12	Intermediate	Level four	West
13	Intermediate	Level four	East
14	Intermediate	Level three	East
15	Intermediate	Level three	West
16	Intermediate	Level two	West
17	Intermediate	Level two	East
18	Intermediate	Level one	East
19	Intermediate	Level one	West
20	Intermediate	Level one	South
21	Intermediate	Level two	Nuclear sample room
22	Auxiliary	Operating	West
23	Auxiliary	Operating	Center
24	Auxiliary	Operating	East
25	Auxiliary	Intermediate	East
26	Auxiliary	Intermediate	Center
27	Auxiliary	Intermediate	West
28	Auxiliary	Basement	West

Hose Reel Number	Building	Floor	Location[a]
29	Auxiliary	Basement	Center
30	Auxiliary	Basement	East
31	Screen house	Main	Fire pumps
32	All-volatile-treatment building	Resin tank area	Northwest center
33	Containment	Operating	East
34	Containment	Operating	West
35	Containment	Mezzanine	East
36	Containment	Mezzanine	West
37	Containment	Basement	East
38	Containment	Basement	West
39	Service	Ground	North hall
40	Service	Main	North hall
41	All-volatile-treatment building	Technical support center	North
42	All-volatile-treatment building	Technical support center	South

a. Location indicates area served by the water hose, not necessarily the location of the water hose reel.

Figure 9.5-1 Figure DELETED

Figure Deleted

Figure 9.5-2 Figure DELETED

Figure Deleted

Figure 9.5-3 Figure DELETED

Figure Deleted

Figure 9.5-4 Figure DELETED

Figure Deleted

Figure 9.5-5 Figure DELETED

Figure Deleted

Figure 9.5-6 Diesel Engine Lubricating Oil Systems (Simplified)

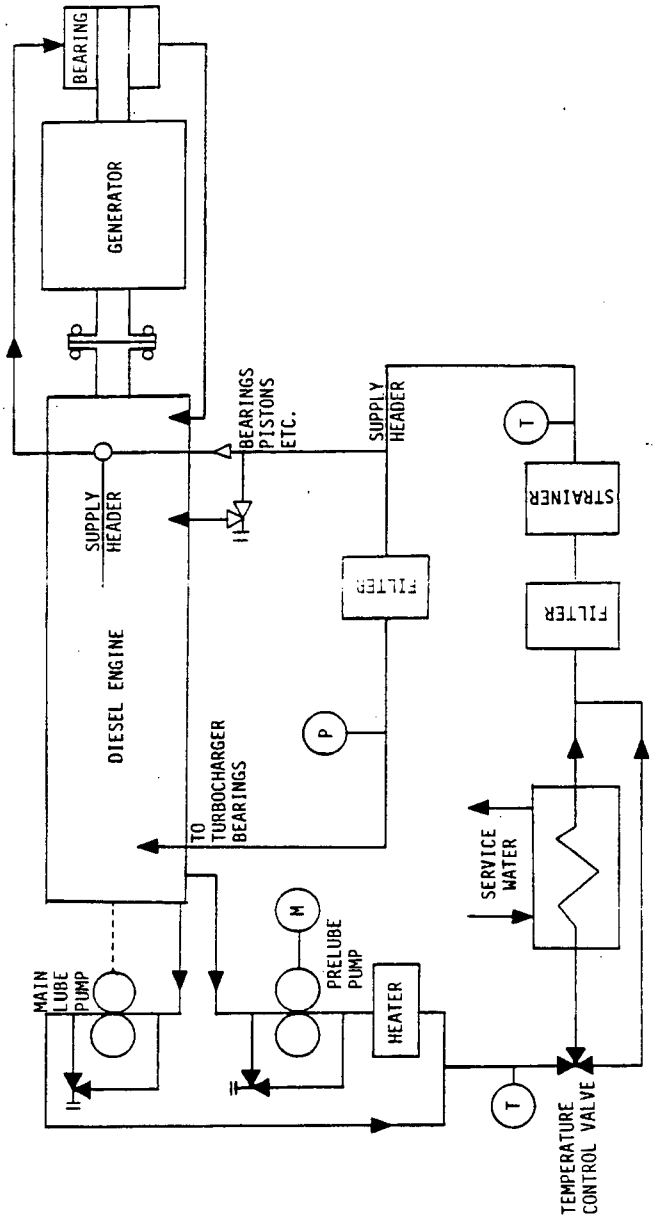

ROCHESTER GAS AND ELECTRIC CORPORATION R. E. GINNA NUCLEAR POWER PLANT UPDATED FINAL SAFETY ANALYSIS REPORT
Figure 9.5-6 Diesel Engine Lubricating Oil System (Simplified)

REV 3 12/87

10 STEAM AND POWER CONVERSION SYSTEM

10.1 INTRODUCTION

10.1.1 SUMMARY DESCRIPTION

10.1.1.1 Functional Description

The conversion of the heat produced in the reactor to electrical energy is accomplished by the steam and power conversion system.

Steam from each of the two steam generators supplies the turbine where the steam expands through the high-pressure turbine, and then flows through moisture separators, reheaters, and intercept valves to two double flow, low-pressure turbines, all in tandem. Five stages of extraction are provided, two from the high-pressure turbine, one of which is the exhaust, and three stages from the low-pressure turbines.

The steam that leaves the exhaust of the low-pressure turbine enters the main condenser as saturated steam. The steam is condensed by the circulating water, which passes through the tubes of the condenser.

Condensate is taken from the condenser hotwell through the condensate pumps, condensate demineralizers and bypass valve to the suction of the condensate booster pumps. The condensate booster pumps flow condensate through the condensate cooler, hydrogen coolers, air ejector condensers, gland steam condenser, and low-pressure heaters to the suction of the feedwater pumps. The feedwater pumps send feedwater through the high-pressure heaters to the steam generators.

Drains from the high-pressure heater are cascaded together with drains from the four reheaters to the No. 4 low-pressure heater and then to a drain tank. The moisture separators also drain to this tank. The heater drain pump discharges to the feedwater pump suction. Drains from the first three low-pressure heaters cascade to the condenser.

The main steam lines have four safety valves on each line, which provide pressure relief to the atmosphere for the steam generators. There are also two steam dump lines with four relief valves each to the condenser and one atmospheric steam dump valve (power-operated relief valve) on each line for long-term plant cooldown by atmospheric steam discharge if condenser steam dump is not available. Each steam line is equipped with a fast closing Main Steam Isolation Valve (MSIV) and a Main Steam non-return check valve. The isolation and non-return valves are located outside of the containment. These valves prevent reverse flow in the steam lines which would result from an upstream steam line break or they isolate a downstream steam line break at the common header.

The feedwater lines are equipped with a nonreturn check valve and an air operated isolation valve in each line. The nonreturn valve is the boundary between Seismic Category I and nonseismic feedwater piping and prevents the steam generator from blowing back through the feedwater lines if damage occurs to the nonseismic portion.

10.1.1.2 Radioactivity

Radiation shielding is not required for the components of the steam and power conversion system. Continuous access to the components of the system is possible during normal conditions.

Under normal operating conditions, there are no radioactive contaminants present in the steam and power conversion system unless steam-generator tube leaks develop. In this event, monitoring of the steam-generator shell-side sample points and the air ejector offgas will detect any contamination.

The limiting conditions to meet the guidelines of 10 CFR 20 for MODES 1 and 2 with leaks through the steam-generator tubes are established in the Technical Specifications.

Corrosion protection for the system is discussed in Section 10.7.7.

10.1.1.3 Major Systems

The major systems within the steam and power conversion system are as follows:

A. The main steam system produces dry saturated steam in the steam generators and directs it to the main turbine and auxiliary equipment. The system is discussed in Section 10.3.

B. The main turbine acts to convert the thermal energy of the steam into mechanical energy. The mechanical energy drives the main generator for the production of electrical energy. The turbine generator and the turbine-generator control systems are discussed in Section 10.2.

C. The condensate and feedwater systems function to condense the steam exhausted from the low-pressure turbines, collect and store this condensate, and then send it back to the steam generator for reuse. The systems are discussed in Section 10.4.

D. The preferred auxiliary feedwater system supplies water to the steam generators when the normal feedwater system is not available. The system is discussed in Section 10.5.

E. The standby auxiliary feedwater system supplies water to the steam generators in the event of a loss of preferred auxiliary feedwater flow, and thus provides a reliable means of residual heat removal in the event that all other sources of feedwater are lost. The system is discussed in Section 10.5.

F. The circulating water system provides the means for condensing the steam exhausted from the low-pressure turbines in the main condensers. It also provides a reliable supply of water for the service water (SW) system and the fire protection system. The system is discussed in Section 10.6.

In addition to the major systems listed above, the steam and power conversion system includes systems with supporting or interfacing functions. They are discussed in Section 10.7 and include

- The steam dump system (Section 10.7.1).
- The heater drain system (Section 10.7.2).

- The extraction steam system (Section 10.7.3).
- The condensate storage system (Section 10.7.4).
- The steam generator blowdown system (Section 10.7.5).
- The turbine and generator auxiliary systems (Section 10.7.6).
- The secondary chemistry control systems (Section 10.7.7).

The design parameters of some of the major components used in the steam and power conversion system are listed in Table 10.1-1.

10.1.2 DESIGN BASES

10.1.2.1 System Design

The turbine-generator system consists of components of conventional design, acceptable for use in large central power stations. The equipment is arranged to provide the best possible thermal efficiency without compromising safety.

The main steam and condensate and feedwater systems are designed to remove heat from the reactor coolant in the two steam generators, producing steam for use in the turbine generator. The systems can receive and dispose of, through cooling and atmospheric relief valves, the total heat existent and produced in the reactor coolant system following an emergency shutdown of the turbine generator from a full load condition.

All of the equipment in the turbine-generator systems was originally designed to produce a maximum calculated gross output of 516,739 kW. With plant uprate to 1775 MWt the equipment was verified as being capable to support a gross electrical output of 612,855 kW.

The system design provides means to monitor and restrict radioactivity migration to the normal heat sink or environment such that, considering all controlled plant discharges, 10 CFR 20 limits are not exceeded under conditions of MODES 1 and 2 and under anticipated system malfunctions or failures.

The system design provides sufficient feedwater under conditions of loss of power and loss of normal heat sink to maintain flow, as required, to the steam generators until power is restored or the reactor heat load is accommodated by other systems.

The electric transmission system directs the power conversion system to provide load changes up to generation step load increases of 10% of full power and ramp increases of 5% of full power per min within the load range of 12.8% to 100% of full power without reactor trip subject to possible xenon limitations late in core life. Similar step and ramp load reductions are possible within the range of 100% to 12.8%. Turbine trip from 50% of full power can be sustained without a reactor trip with the supplemental use of steam dump to the condenser. Complete loss of load, when operating above 50%, will cause a reactor trip.

The system design incorporates backup means of heat removal (modulating relief valves and safety valves) under any loss of normal heat sink (e.g., main steam stop valves trip, condenser isolation, recirculating water loss of flow) to accommodate reactor shutdown heat rejection requirements. Planned system atmospheric discharges under MODES 1 and 2 are made only

if atmospheric releases are acceptable under considerations of 10 CFR 20. All such discharges are monitored for acceptable radiation levels. Technical Specifications on secondary side activity ensure that releases are minimized during transients.

The steam and power conversion system provides steam for driving the turbine-driven auxiliary feedwater pump (TDAFW) and for turbine gland steam, reheater steam, and air ejector operation in addition to supplying the turbine generator.

10.1.2.2 Codes and Classifications

The codes and classifications used in the design of the main steam system, the feedwater system, the preferred auxiliary feedwater system, and the standby auxiliary feedwater system appear in Table 3.2-1. The table lists the systems and components along with the current code requirements, the codes and standards used when the plant was built, the seismic classification in accordance with Regulatory Guide 1.29, and the seismic classification used in the plant design.

As part of the Systematic Evaluation Program (SEP) the codes, standards, and classifications to which the station was built were compared to current code requirements. It was generally concluded that changes between original and current code requirements do not significantly affect the safety functions of the systems and components reviewed. Details of the review of codes and classifications at Ginna Station are discussed in Section 3.2.2.

10.1.3 SYSTEM EVALUATION

10.1.3.1 Variables Limits Functions

Trips, automatic control actions, and alarms will be initiated by deviations of system variables within the steam and power conversion system. In the case of automatic corrective action in the steam and power conversion system, appropriate corrective action will be taken to protect the reactor coolant system. The more significant malfunctions or faults which cause trips, automatic actions, or alarms in the steam and power conversion system are:

1. Turbine trips.
   a. Generator/electrical faults.
   b. Loss of both circulating water pumps.
   c. Low condenser vacuum.
   d. Thrust bearing failure.
   e. Low lube-oil pressure.
   f. Loss of both main feedwater pumps.
   g. Turbine overspeed.
   h. Reactor trip.
   i. Manual trip.
2. Automatic control actions.

a. High level in steam-generator stops feedwater flow.

b. Normal and low level in steam generator modifies feedwater flow by continuous proportional control.

3. Principal alarms.

a. Low pressure at feedwater pump suction.

b. Low vacuum in condenser.

c. Low water level in condenser hotwell.

d. High water level in condenser hotwell.

e. High temperature in low-pressure turbine exhaust hood.

f. Low NPSH margin at feedwater pump suction (shown on Plant Process Computer System PPCS).

10.1.3.2 Transient Effects

A reactor trip from power requires subsequent removal of core decay heat. Immediate decay heat removal requirements are normally satisfied by the steam bypass to the condensers. Thereafter, core decay heat can be continuously dissipated via the steam bypass to the condenser as feedwater in the steam generator is converted to steam by heat absorption. Normally, the capability to return feedwater flow to the steam generators is provided by operation of the turbine cycle feedwater system. One motor-driven auxiliary feedwater pump (MDAFW) can supply sufficient feedwater for removal of decay heat from the plant.

In the unlikely event of complete loss of offsite electrical power to the station, decay heat removal would continue to be ensured by the availability of one steam-driven, and/or one of two motor-driven auxiliary (MDAFW) or standby auxiliary feedwater pumps (SAFW), and steam discharge to the atmosphere via the main steam safety valves (MSSV) and/or the atmospheric relief valves (ARV). The preferred auxiliary feedwater system utilizes the two motor-driven pumps with each pump delivering feedwater into an associated steam generator and a steam-driven pump to deliver flow to both steam generators. In this case feedwater is available from two condensate storage tanks (CST) by gravity feed to the preferred auxiliary feedwater pumps. Each condensate storage tank (CST) has a nominal capacity of 30,000 gal of water for a total nominal capacity of 60,000 gallons. Actual usable volume is less then 60,000 gallons. The minimum amount of water in the condensate storage tanks (CST), given in the Technical Specifications (24,350 gal), is the amount needed to remove reactor decay heat for 2 hrs of operation after reactor trip at full power. If the need is more than a 2-hr supply and additional water is not available in the condensate storage tanks (CST), additional sources can be made available. These include the condenser hotwell and the all-volatile-treatment storage tank. Further, Lake Ontario water could be used. This water supply is available from the lake via the service water (SW) system for an indefinite time period. Finally, water could be made available from the yard fire hydrant system.

In the event of a high-energy line break or other event that would render inoperable the three preferred auxiliary feedwater pumps, the standby auxiliary feedwater system can provide the necessary feedwater for removal of decay heat from the plant. Each standby auxiliary feed-

water pump (SAFW) delivers feedwater into an associated steam generator. Feedwater is available from the service water (SW) system, a 10,000 gallon condensate test tank (if filled), or from the yard fire loop.

10.1.3.3 Secondary-Primary Interactions

Following a turbine trip, from power levels above 50% full power, the control system reduces reactor power output immediately by a reactor trip. The steam bypass to the condenser together with the action of the control rods can handle all the steam relief without lifting the main safety valves.

In the event of failure of one feedwater pump, the feedwater pump remaining in service will carry approximately 60% of full load feedwater flow. If both main feedwater pumps fail, the turbine will be tripped and the motor-driven auxiliary feedwater pumps (MDAFW) will start automatically. If the reactor is operating above 50% of full power at this time, the reactor will trip.

Table 10.1-1
STEAM AND POWER CONVERSION SYSTEM COMPONENT DESIGN PARAMETERS

Turbine generator	
Turbine type	Three-element, tandem-compound, four-flow exhaust
Turbine capacity	
Maximum guaranteed, kW	**585,000 @ 1775MWt**
Maximum gross output, kW	**613,640**
Turbine speed, rpm	**1800**
Generator rating, kVA	**667,000**
Condensers	
Number	Two
Type	Radial flow, semicylindrical water boxes, deaerating
Condensing capacity, lb of steam/hr	**4,235,070**
Condensate pumps	
Number	Three
Type	Multistage, vertical, pit-type, centrifugal
Design capacity (each), gpm	6600
Motor type	vertical
Motor rating, hp	1500
Feedwater pumps	
Number	Two
Type	Single stage, double flow, centrifugal
Design capacity (each), gpm	8800
Motor type	Horizontal
Motor rating, hp	5500

Condensate booster pumps

Number	Three (50% capacity each)
Type	Horizontal single stage, centrifugal
Design capacity, gpm	5400

NOTE: Pump PCD01A has a higher capacity to accomodate future EPU requirements.

Motor rating, hp	500

Auxiliary feedwater

Sources	30,000 gal in each of two condensate storage tanks 28,000 gal in each of two condenser hotwells 100,000 gal all-volatile-treatment storage tank Unlimited service water Yard fire hydrant system

Auxiliary feedwater pumps

Number	Three (one steam-driven and two motor-driven)
Design capacity (each), gpm	400 (steam-driven) 200 (motor-driven)

Standby auxiliary feedwater (SAFW)

Sources	Service water Yard fire hydrant system 10,000-gal condensate test tank

Standby auxiliary feedwater (SAFW) pumps

Number	Two (motor-driven)
Design capacity (each), gpm	235

Main steam isolation valves

Number	2
Type	Atwood and Morrill
Flow design capacity, lb/hr	3.29×10^6 at 770 psia
Closure time (without flow), sec	5

Main steam safety valves

Number	8
Type	Crosby
Capacity (each), lb/hr	822,500 at 1085 psig two at 1085 psig and six at 1140 psig

Condenser steam dump valves

Number	8
Type	Copes Vulcan
Capacity, lb/hr	302,500 at 695 psig

Atmospheric steam dump valves

Number	2
Type	Masoneilan
Capacity (each), lb/hr	329,000 at 1005 psig (normal)

10.2 TURBINE GENERATOR AND CONTROLS

10.2.1 MAIN TURBINE

10.2.1.1 Description

The main turbine is made up of one high-pressure and two low-pressure turbines, all mounted on a common shaft. The steam flow path is first through the high-pressure turbine, then in a parallel path to the two low-pressure units via the four moisture separator reheaters. The main turbine is a three-element, tandem compound, four-flow exhaust, 1800 rpm unit with 40-in. last row blades. Both the high- and low-pressure elements are of the double flow design. As a part of the plant uprate to 1775 MWt, the HP Turbine was modified from a partial arc design to a full arc design; and the rotating and stationary blading of the HP Turbine was replaced with a new design. Additionally, the four HP Turbine control valves were replaced with larger valves to decrease throttling losses in control valves.

The turbine has a maximum guaranteed gross rating of 496,322 kW when operating with inlet steam conditions of 730 psia, 508°F full throttle temperature, exhausting at 1.35 in. of mercury absolute, 0% makeup, and with five stages of feedwater heating in service.

High-pressure steam is admitted to the high-pressure turbine through two stop and four governing control valves. These valves are controlled by the electro-hydraulic control system discussed in Section 10.2.3. The flow guide is made up of a single nozzle chamber to allow full 360-degree steam entry at full power. Steam flows axially in both directions through 11 stages of pressure reaction blading.

The high-pressure turbine exhaust steam is directed through the preseparators to four combination moisture separator reheaters where the steam is superheated. This is accomplished by:

A. Moisture separation.

B. Reheating the relatively dry steam.

The moisture is removed as the high-pressure exhaust steam rises through the multi-vane chevron-configuration separators. The steam then flows over the reheater tube bundle where it is superheated by steam from the main steam header. Entry into the low-pressure turbines is through the reheater stop and intercept valves. Flow through the low-pressure turbines is double axial flow through 11 stages of pressure reaction blading to exhaust into two single-pass condensers.

10.2.1.2 Turbine Controls

10.2.1.2.1 Description

High-pressure steam enters the turbine through two stop valves and four governing control valves. One stop and two control valves form a single assembly which is anchored to the foundation above the turbine room floor line. An electrohydraulic servo-actuator controls each stop valve so that it is either in the wide-open or fully closed position. The control signal for this servo-actuator comes from the mechanical-hydraulic overspeed trip portion of the electrohydraulic control system. The major function of these stop valves is to shut off the

flow of steam to the turbine in the event the unit overspeeds beyond the setting of the overspeed trip. These valves are also tripped when the protective devices function. The control valves are positioned by a similar electrohydraulic servo-actuator acting in response to an electrical signal from the main governor portion of the electrohydraulic control system. Upon loss of load resulting in a high rate of acceleration, the auxiliary governor portion of the electrohydraulic control unit will act to close the control valves rapidly.

The steam, after passing through the stop and control valves, passes through the high-pressure turbine and the preseparators, then through the moisture separator and reheater. The reheater stop valves and reheater intercept valves are located between the reheater and the low-pressure turbine inlet. Their purpose is to control the steam flow to the low-pressure turbines in the event of turbine overspeed. The reheater stop valve is an open-closed type valve that is closed upon operation of the overspeed trip, similar to the operation described above for the main stop valves. The reheater intercept valve is a positioned valve controlled from the auxiliary governor portion of the electro-hydraulic control system. The use of intercept valves provides the capability for the turbine generator to accept a 50% loss of external electrical load without turbine trip; in this event, electrical power is maintained to the plant auxiliaries.

Figure 10.2-1 illustrates the control of the steam admission valves (electrohydraulic governing system). Any steam path has two valves in series which are controlled by completely independent systems. Furthermore, the high-pressure oil system that actuates the steam valves is completely independent of the low-pressure lube-oil. The turbine control and protection system is fail-safe; any loss of oil pressure or voltage causes closure of the steam valves.

The autostop valve is also tripped when any one of the protective trip devices is actuated. The protective devices are all included in a separate assembly but connected hydraulically to the overspeed trip relay.

Trip of the turbine generator initiates a reactor trip to prevent excessive reactor coolant temperature and/or pressure.

10.2.1.2.2 Automatic Load Reduction

Automatic turbine load runback is initiated by two-of-four coincidence overpower delta T channels or two-of-four coincidence overtemperature delta T channels (see Section 7.7.1.2.8).

10.2.1.3 Turbine Disk Integrity

Turbine disk cracking was investigated and analyzed by Westinghouse Corporation in a proprietary report submitted to the NRC in June 1981. The report recommended criteria for scheduling disk inspections that provide a very low probability of disk failure prior to inspection. A safety evaluation report on these criteria was issued by the NRC on August 28, 1981. (*Reference 1*) Rochester Gas and Electric Corporation committed to inspect and reinspect the low-pressure rotor disks on a schedule consistent with the Westinghouse criteria as outlined in *Reference 1* (see Section 3.5.1.2). The impact of the uprate (1775 MWt) operating conditions on LP Turbine disk cracking was evaluated and no changes to the normal disk inspection frequency was required.

10.2.1.4 Turbine Supervisory Instrumentation

Turbine supervisory instrumentation is provided to monitor turbine vibration, eccentricity, and differential thermal expansion and provide alarms in the control room in the case of abnormal conditions.

The turbine supervisory instrumentation system includes a proximity transducer system, which uses non-contacting pickups for measuring the gaps of the following sensors: radial vibration, key phasor reference, eccentricity, and thrust position. The proximity transducer system consists of a proximeter, which is supplied with dc voltage from the system power supply. The proximeter produces a radio frequency signal, which is supplied to the 8-mm proximity probes through an extension cable. The radio frequency signal sets up an eddy current signal across the air gap being measured. This eddy current reduces the return signal to the proximeter, which conditions the signal for display on a digital monitor.

Thermal case expansion of the turbine is measured with a linear variable differential transformer (LVDT) transducer assembly. The LVDT is supplied with dc voltage by the case expansion analog indicator to which it is connected.

Differential expansion of the turbine shaft is measured at the shaft ends by 25-mm probes connected to 25-mm proximeters through 25-mm extension cables. The output from the differential expansion proximeters is transmitted to differential expansion monitors in the turbine supervisory instrument rack in the control room.

Digital monitors are provided to display the outputs of the following proxi-meters: nine x-y radial vibration monitors, one eccentricity monitor, one thrust position monitor, one case expansion monitor, and two differential expansion monitors.

Relay modules are provided to actuate control room annunciators for high vibration, rotor eccentricity, differential expansion, and rotor position.

The system automatically receives alarms for an abnormal condition. Readings of vibration, eccentricity, etc., may either be read in the rear of the main control board on the individual monitors, on the recorder, or may be called up on a CRT monitor available to both maintenance and engineering personnel.

10.2.2 MAIN GENERATOR

The main generator is a totally enclosed, pressurized, hydrogen gas cooled, four pole, three-phase ac generator. The generator at full load is rated to produce **613.64** MW at an 0.92 power factor. The generator rating is 667 MVA at 0.92 power factor and 60 Hz at 1800 rpm, with 60 psig hydrogen pressure. The generator has sufficient capability to accept the gross kilowatt output of the steam turbine with its control valves wide open at rated steam conditions.

The generator uses a brushless generator exciter system and voltage regulator. Direct current voltage to the field windings of the generator is supplied by the brushless exciter system. Three-phase power is supplied to the voltage regulator circuit through the exciter field breaker by the permanent magnet generator. The permanent magnet generator is mounted on

the end of the exciter shaft and consists of 28 permanent magnets, which induce a voltage in the stator windings. Automatic and manual control of the generator field voltage is provided by the voltage regulator circuit. The voltage regulator provides control during normal and transient system operations by receiving power from the permanent magnet generator stator windings. The rotating bridge rectifier assembly supplies regulated dc voltage to the generator field windings. In the event of a generator trip, whether automatic or manual, a rapid deexcitation circuit is energized for 3 seconds to collapse the generator field before the generator field breaker opens. The generator exciter is totally enclosed. Air flow from a blower attached to the generator shaft is cooled by an installed cooler.

10.2.3 ELECTROHYDRAULIC CONTROL SYSTEM

10.2.3.1 Function

The electrohydraulic control system performs the following functions:

A. Controls the position of the valves that admit steam to the high-pressure turbine (four control valves).

B. Positions the valves that isolate the steam supply to the high-pressure and low-pressure turbines (two high-pressure turbine stop valves, four reheater stop valves, and four reheater intercept valves).

C. Responds automatically to an operator input.

D. Allows direct operator control.

E. Responds to automatic protective signals and devices.

F. Alerts the operator to malfunctions of the component parts of its system.

The function of the high-pressure fluid control system is to provide a motive force which positions the turbine steam valves in response to electronic commands from the electronic controller, acting through the servo-actuators. The fluid control medium is a fireproof triarylphosphate ester base fluid. The fluid is stored in a stainless steel reservoir assembly on which is mounted a duplicate system of fluid pumps, controls, filters, and heat exchangers. The system is so arranged that one pump and one set of the various control components function while the duplicate set serves as a standby system.

10.2.3.2 Components

The electrohydraulic control system has a 200-gal stainless steel reservoir tank which provides the suction for the pumps and storage for the returned fluid. Inside the reservoir is a common filter suction which is constructed of 140-micron wire screen.

Two positive displacement pumps, 27.2 gpm each, with a design pressure of 2500 psig, supply the force for fluid circulation. Each pump discharges through a double section filter. The pump discharge filters are steel-backed 10-micron cartridge filters with a differential pressure switch set at 100 psid to warn the operator of filter clogging.

There are two pilot-operated unloader valves on the discharge side of the pumps, which regulate electrohydraulic control fluid pressure between 1600 to 2200 psig. The unloader valves

"unload" the pump discharge back to the reservoir when fluid pressure reaches 2200 psig. The unloader shuts when header pressure drops to 1600 psig and redirects the pump discharge to the high-pressure header.

If system pressure increases to 2250 psig, the high-pressure alarm will sound, followed by relief valve actuation at 2350 psig. The relief valve returns the fluid to the reservoir.

A control block manifold mounted on the reservoir top is machined for the assembly of the following:

- Two differential switches.
- Four metal mesh 10-micron pump discharge filters.
- Two unloading valves.
- Two check valves from discharge.
- One relief valve.
- Two manual shutoff valves to the unloading valves.

There are four high-pressure accumulators mounted in a supporting rack. They are connected through manual isolation valves to the manifold block. Each accumulator consists of a cylinder that encloses a free piston fitted with ring seals. Hydraulic fluid pressure on the lower side of the piston is opposed by a 1250-psig pressure charge of nitrogen gas on the upper side.

Fluid from valve operation or trip functions enters a common drain line, and is directed to a three-way valve. This valve permits the operator to select one of two heat exchangers and return filters for service or to bypass the filters and heat exchangers. There are two heat exchangers mounted on the side of the reservoir. Fluid returning to the reservoir flows in the shell side while service water flows through the tube bundle. Also mounted on the side of the reservoir are two disposable cotton-cellulose cartridge-type filters. Upon leaving the heat exchangers or bypass line, the fluid is returned to the reservoir.

A bypass filter system provides the capability for continuous circulation of approximately 1 gpm of high-pressure fluid to the reservoir via a fuller's earth filter which is mounted in series with a corrugated cellulose filter. This assembly is located in an orificed line from the high-pressure fluid header (manual isolation provided). The fuller's earth filter is used for acid and water removal control of the fluid and the cellulose filter is used for contaminant control of the fluid.

10.2.3.3 Alarms and Controls

The alarms for the electrohydraulic control system on the main control board are the electrohydraulic reservoir level and the electrohydraulic system reservoir pressure temperature alarms.

A. Electrohydraulic reservoir level - high level alarm, low level alarm, low-low level alarm, and low-low level pump trip.

B. Electrohydraulic system reservoir - return pressure greater than 30 psig, low pressure 1350 psig, discharge filter discharge pressure greater than 100 psig, and temperature greater than 140°F.

The controls for the two electrohydraulic control pumps are start/stop switches located on the main control board.

The valves controlled by the electrohydraulic control system are:

- High-pressure turbine stop valves.
- High-pressure turbine control (governing) valves.
- Reheater stop valves.
- Reheater interceptor valves.

The high-pressure turbine stop valves are two hydraulically opened, spring-closed valves that isolate the high-pressure turbine inlet from the high-pressure steam supply. They are designed to close rapidly when the unit trips to remove the source of motive power from the turbine.

The high-pressure control (governing) valves are four hydraulically opened, spring-closed valves that control the steam flow into the flow guide for the high-pressure turbine. They must do this in order to control unit speed when the generator is not connected to the grid and to control generator load when connected to the grid.

The reheater stop valves are four hydraulically opened, spring-closed valves which are used to isolate the steam supply to the low-pressure turbine. They close rapidly on a unit trip and prevent the stored steam contained in the moisture separator reheater unit and interconnecting piping from reaching the low-pressure turbine causing a possible overspeed condition.

The reheater interceptor valves are four hydraulically opened, spring-closed valves used to limit the steam flow to the low-pressure turbine following a partial or complete load rejection.

10.2.3.4 Turbine Trip Devices

10.2.3.4.1 Overspeed Trip Mechanism

The overspeed trip mechanism consists of an eccentric weight mounted on the turbine rotor extension shaft. The weight is offset from the center so that centrifugal force tends to move it outward. The weight is normally held in place by the compression of a spring. The valve trigger normally holds the trip valve closed by oil pressure being opposed by spring tension.

When the turbine overspeeds, the spring compression is overcome by centrifugal force. The weight moves out to strike a trigger, which trips the overspeed trip valve and releases the auto stop oil which trips the turbine. This trip is set at a value less than 109.3% of design speed. A manual means of testing the trip mechanism while at load is provided.

10.2.3.4.2 Auxiliary Governor

If the auxiliary governor senses an overspeed condition at 102% of 1800 rpm, high-pressure fluid from the top of the dump valve pistons of the reheater intercept valves will be dumped through the stop valve emergency trip line in the drain header. This action will close the reheater intercept valves. As soon as the overspeed condition clears, backpressure will be restored to the check valve in the emergency trip line and the reheater intercept valves will reopen.

The overspeed condition will also dump fluid from the dump valves associated with the turbine control valves, causing them to modulate closed until the overspeed condition clears.

10.2.3.4.3 Protective Trip Devices

Protective trip devices are included in a separate assembly. These devices include:

A. Low bearing oil pressure trip - On a low bearing oil pressure trip, a spring-loaded diaphragm at 6-psig bearing oil pressure will move downward and raise the protective trip dump relay, dumping auto stop oil pressure. An alarm will sound at 10 psig decreasing.

B. Solenoid trip - On a solenoid trip signal, the solenoid energizes and raises the protective trip dump relay, dumping the auto-stop oil and tripping the turbine. The solenoid is energized by the following:

   1. Reactor trip (from trip breakers).
   2. Manual pushbutton on the operator's console.
   3. Trip of all main feedwater pumps.
   4. Generator trip on a fault condition.
   5. Trip of all circulating water pumps.

C. Thrust bearing trip device - The thrust bearing trip device consists of two small nozzles which have discharge openings close to the thrust collar faces. Oil is supplied to each nozzle through orifices, and the pressure in the line is piped through ballcheck valves to a spring-loaded diaphragm in the protective trip block. Should excessive wear occur, the thrust bearing collar will move toward one of the nozzles and the pressure in the line will increase. When pressure reaches 35 psig, a pressure switch will sound an alarm. If it continues to rise to 75-80 psig, the diaphragm will move, raising the protective trip dump relay dumping the auto-stop oil to the drain.

   An electrical thrust bearing trip will trip the protective trip dump relay without time delay if the turbine trips and if the thrust bearing trip pressure is greater than 35 psig.

D. Low vacuum trip - On a low vacuum trip, a spring-loaded diaphragm will raise the protective trip dump relay, dumping oil to the drain when vacuum decreases to 20 in. of mercury. A latch is provided to permit starting the unit when vacuum is low. The latch falls out automatically when vacuum reaches a value of 20 to 24 in. of mercury. Even if latched below this value, the trip will function if a positive pressure of 2.5 to 4.5 psig is developed during the starting cycle.

10.2.3.4.4 Testing and Inspection

There are three different tests of the turbine overspeed protection system performed on a routine basis. At every turbine overhaul and at each refueling outage the following two tests are performed:

A. Overspeed protective test - The turbine is oversped to the trip setpoint to close the stop, governing, and interceptor valves. This test is only performed during power descent and not repeated during power escalation unless problems are encountered.

B. As turbine is brought up to speed, the stop and governing valves are tested as a normal part of the startup.

On a periodic basis the following two tests are performed:

A. One at a time the solenoid valves (20/ET, 20-1/AG, and 20-2/AG) are isolated from the electrohydraulic control system and electrically actuated to verify operability.

B. The turbine stop, governing, and interceptor valves are tested (stroked) on an annual basis (*Reference 2*).

REFERENCES FOR SECTION 10.2

1. Letter from D. M. Crutchfield, NRC, to J. D. Maier, RG&E, Subject: Turbine Disc Cracking (Ginna), dated August 28, 1981.

2. Rochester Gas and Electric Corporation, Safety Evaluation, SEV-1138, Revision 0, Turbine Stop and Control Valve Test Frequency Change, dated November 11, 1999.

Figure 10.2-1 Turbine Control and Protection System

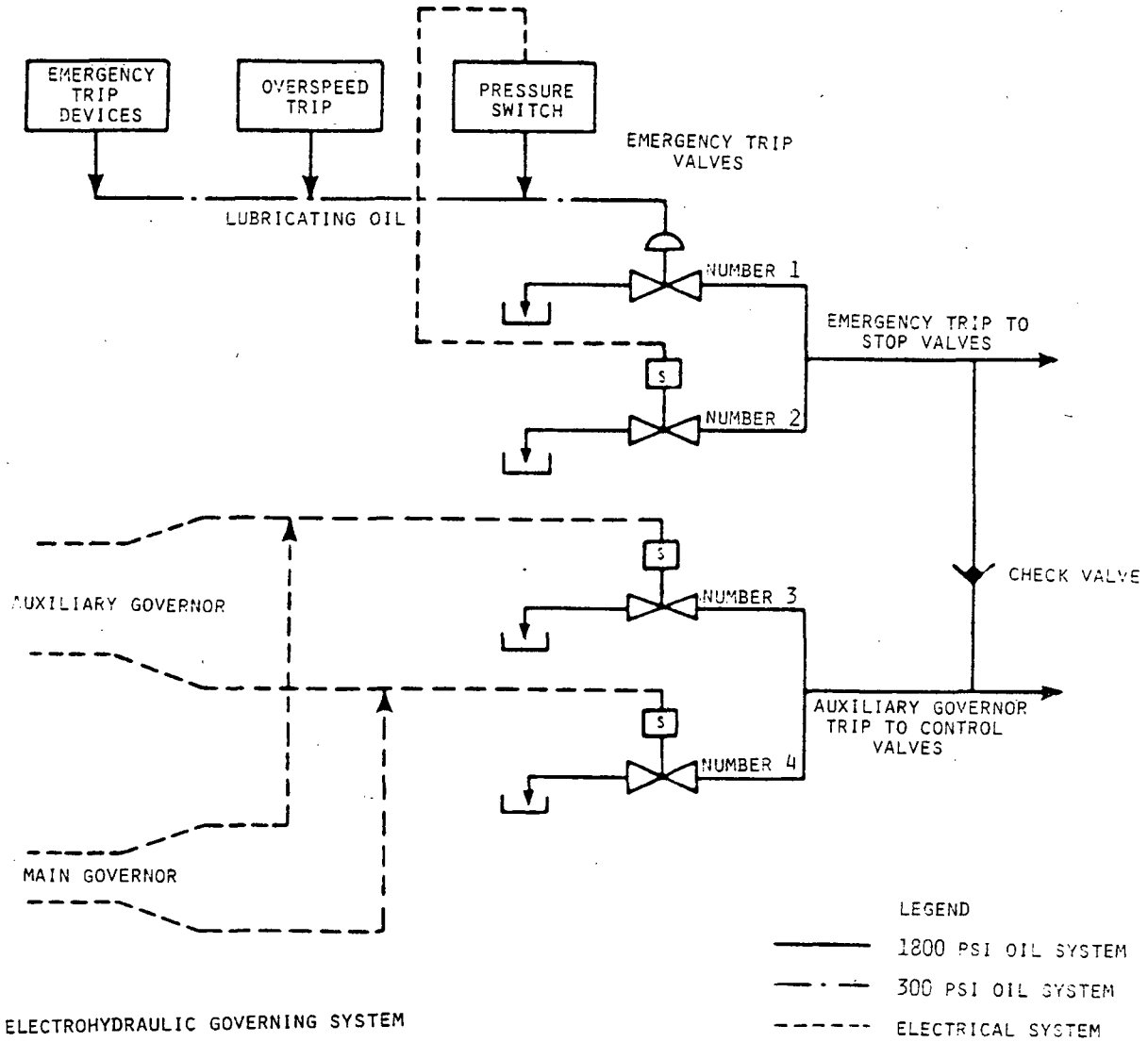

ROCHESTER GAS AND ELECTRIC CORPORATION R.E. GINNA NUCLEAR POWER PLANT UPDATED FINAL SAFETY ANALYSIS REPORT
Figure 10.2-1 Turbine Control and Protection System

10.3 MAIN STEAM SYSTEM

10.3.1 DESIGN BASIS

The function of the main steam system is to produce dry saturated steam in the steam generators and to direct it to steam-driven components and auxiliary systems. Most of the steam is used by the main turbine.

The main steam system is designed to generate and contain saturated steam and transport it from the steam generators to the main turbine during power operation. When the unit is in the MODE 3 (Hot Shutdown) mode, the main steam system operates to maintain no-load T_{AVG} (547°F) or it can be used to perform a plant cooldown.

The steam piping is designed to ensure correct steam distribution and pressures to all steam-operated equipment for all turbine loads. The steam and feedwater lines with their supports and structures from the steam generators to their respective isolation valves are Seismic Category I.

10.3.2 SYSTEM DESCRIPTION

10.3.2.1 Flow Path

The main steam flow diagram is shown in Drawings 33013-1231 and 33013-1232.

Feedwater entering the steam generator mixes with recirculated fluid and flows downward around the tube bundle wrapper and enters the tube bundle where heat is transferred from the reactor coolant to the feedwater producing steam. This wet vapor is then dried to a near moisture-free condition as it exits the steam generator. The steam exits the steam generator through an integral flow restrictor which limits excessive flow after which it passes through a flow venturi to measure steam flow. It then enters the main steam line where it passes by the main steam safety valves (MSSV) and an atmospheric relief valve (ARV), then through an isolation valve (MSIV) and non-return check valve to the equipment it serves.

Steam supplied to the high-pressure turbine passes through a turbine stop valve (normally open) and a control valve which is used to control the steam flow into the turbine. Some of the steam supplied to the high-pressure turbine is extracted from various turbine stages and sent to preheat the feedwater returning to the steam generator via the feedwater heaters which are located in both the feedwater and condensate systems. Steam exiting from the high-pressure turbine is directed through the preseparators to the moisture separator reheaters where the moisture is removed and the steam is superheated prior to entering the low-pressure turbines. The steam leaving the moisture separator reheaters passes through a reheater stop valve and an intercept valve and then enters the low-pressure turbines. Some of this steam is extracted from various turbine stages and used for feedwater preheating.

The total steam flow is approximately 7.7 x 10^6 lbm/hr with steam generator blowdown flow ranging from 40-100 gpm per steam generator as needed to maintain secondary side water chemistry within plant water chemistry requirements. This corresponds to a core power of 1775 MWt and an approximate 590 MWe net rating.

10.3.2.2 Steam Generators

The steam generators form the boundary between the radioactive primary and the nonradioactive secondary. There are two steam generators, each capable of delivering 3.9 x 10^6 lbm/hr saturated steam at 810 psig, at the steam generator outlet nozzle with an RCS T_{AVG} of 576°F . The steam generator shells are constructed of carbon and low alloy steels with the primary side divider plate being Alloy 690 and Alloy 600-clad tubesheet on the primary side. The major components of the steam generator include the feed ring, blowdown connections, tube bundle wrapper, moisture separators, and a steam flow restrictor. A detailed discussion of the steam generators as part of the reactor coolant pressure boundary is in Section 5.4.2.

Feed Ring

The replacement steam generator's feedwater distribution system is a split ring design connected via a T-section to a "goose-neck" assembly which is welded to the thermal sleeve in the feedwater nozzle. Feedwater is distributed axi-symmetrically around the downcomer through Alloy J-tubes which discharge from the top of the feed ring. The use of Alloy J-tubes, the all welded design, the thermal sleeve and the "goose-neck" design satisfy all current NRC recommendations with respect to waterhammer, provide flow stratification mitigation and address industry concerns regarding corrosion, corrosion cracking, thermal fatigue, and material erosion.

Tube Bundle Wrapper

The tube bundle wrapper encloses the tube bundle of 4765 Inconel tubes and forms the inner wall of the annular downcomer passage.

Blowdown Connections

The tubesheet surface blowdown is performed at the tube-free lane which contains an integral blowdown header consisting of two (2) holes down the tube-free lane connected to the secondary surface by means of several vertically-drilled connecting holes. This draws a flow of liquid from the no tube-lane. The two blowdown nozzles are prepared for 3" Sch. 160 pipe.

Moisture Separator Assemblies

Two stages of moisture separators maintain the moisture content of the steam at, or less than, 0.1% moisture. Most of the water is removed from the steam/water mixture by the primary separators before entering the secondary separators. The steam/water mixture exiting the tube bundle enters the primary riser at the bottom of the separator support deck. The mixture is separated into water and steam by centrifugal action returning the separated water into the downcomer to mix with the feedwater and providing a steam/water mixture to the secondary separators at greater than 80% quality. The secondary separators use centrifugal separation to further dry the steam to a moisture content of less than 0.1% by weight.

Steam Flow Venturis

The steam line leaving each steam generator has a steam flow venturi in a horizontal section of the 30" main steam piping. During MODES 1 and 2, the venturi provides a differential

pressure signal that is used for steam flow indication. Two differential pressure cells are connected to the venturi to measure that parameter. In the event of a steam line break, there is an integral flow restrictor in the replacement steam generator outlet nozzles which will limit the steam flow from the steam generators.

10.3.2.3 Steam Piping

The steam piping from the steam generators to the main steam isolation valves (MSIV) is Seismic Category I and is designed to ensure the correct distribution and pressure to all steam loads at any turbine power.

The steam line from steam generator A leaves the containment and goes directly into the intermediate building. The steam line from steam generator B leaves the containment on the northeast side, goes around the containment building, and enters the intermediate building from the east end. Inside the intermediate building, tapping off each steam line, is a steam supply line to the turbine-driven auxiliary feedwater pump (TDAFW), the four main steam safety valves (MSSV), and an atmospheric relief valve (ARV).

10.3.2.4 Main Steam Safety Valves (MSSV)

There are four main steam safety valves (MSSV) for each steam line. The first valve lifts at 1085 psig and the remaining three valves are set to lift at 1140 psig. The minimum total relieving capacity is 6.58×10^6 lbm/hr which is equal to the full load steam flow for the original 1520 MWt licensed power level. Although these safety valves do not relief 100% steam capacity at 1775 MWt, the UFSAR Chapter 15 analyses demonstrates that sufficient relief capacity is available to prevent over-pressurization of the steam generators and main steam systems. The valves, therefore, are able to relieve the required steam flow.

10.3.2.5 Atmospheric Relief Valves (ARV)

One atmospheric relief valve (ARV) is provided on each steam line. The valve has two functions. It offers overpressure protection to the steam generator at a setpoint below the main steam safety valves (MSSV) setpoints and it can be used to maintain no-load T_{AVG} or perform a plant cooldown in the event the steam dump to the condenser is not available. The relief valves are air-operated valves with 329,000 lbm/hr normal relief capacity. The maximum ARV flow from a stuck open ARV is less than the flow from a stuck open MSSV. They can be operated automatically or remotely from the control room. The valves can also be operated manually by a handwheel mounted on each valve and they can be isolated by a manual valve located upstream of the valves.

The atmospheric relief valve (ARV) controls are integrated into the advanced digital feedwater control system (Section 7.7.1.5). The atmospheric relief valve (ARV) control system consists of microprocessor-based controllers with dedicated manual/auto stations on the control room main control board. The control stations have steam pressure setpoint increase/decrease pushbuttons, valve position pushbuttons, and valve demand indication meters. Input to the control system is from validated median signal selected steam pressure channels (six channels, three per loop). The advanced digital feedwater control system and atmospheric relief valve (ARV) control system use median signal selection of input signals, as explained in Sec-

tion 7.7.1.5, to reduce the probability of a failed sensor disturbing the control systems. The median steam pressure signal is used as input to the atmospheric relief valve (ARV) control system. The steam pressure setpoint (set by the operator) is subtracted from the median selected steam pressure for the loop, and the difference signal is applied to the steam generator pressure controller to develop a modulation signal to control the loop atmospheric relief valve (ARV). If two or three steam pressure channels are lost for one loop, that loop's atmospheric relief valve (ARV) control automatically switches to manual operation and the feedwater control remains in automatic. If two or three steam pressure signals for both loops are lost, both atmospheric relief valves (ARV) switch to manual and the feedwater control also switches to manual. In manual operation the operator uses the pushbuttons to control valve position, and thus, the steam pressure. In the event of failure of the automatic and remote manual controls to control steam generator pressure, backup solenoid valves will energize to open the atmospheric relief valves (ARV) at 1060 psig. When the pressure decreases to 1005 psig, the backup solenoid will deenergize causing the valves to close.

The atmospheric relief valves (ARV) are Seismic Category I as part of the main steam line pressure boundary. The piping and restraints necessary to ensure functioning of the valves after a seismic event are also Seismic Category I. Air supply to the valves is provided by the nonseismic instrument air system. Backup supply is provided by two nonseismic nitrogen supply systems in the event that a loss of offsite power causes loss of the instrument air system. Therefore, the atmospheric relief valves (ARV) cannot be expected to operate after the seismic event.

10.3.2.6 Main Steam Isolation Valves

The main steam isolation valves (MSIV) are 30-in. pipe size, 24-in. seat diameter, ANSI 600-lb rating, Atwood and Morrill Company, Inc., swing-disk check valves. The open position of the disk is at full horizontal, held open against the flow of steam by an air cylinder. The valves have stainless steel disks and disk arms. The stiffness of the disk arms is designed to reduce valve strains developed during closure following a postulated downstream pipe break. The disks and disk arms are also designed to uniformly transfer the kinetic energy from the disk to the valve body during impact. The valve disks and disk arms are stainless steel in order to better withstand the local strains in the contact region. The design of the valves reduces the likelihood of damage due to spurious closure and prevents excessive degradation of the valves during normal service.

The valves are designed to shut in less than 5 sec during no-flow conditions and are tested at each MODE 6 (Refueling) outage. Other design parameters are listed in Table 10.1-1. Main steam isolation is discussed and evaluated in Section 5.4.4.

10.3.2.7 Main Steam Non-Return Check Valves

Downstream of the main steam isolation valves (MSIV) are the main steam non-return check valves. They are free swinging gravity closing type check valves. The check valves protect the main steam header against reverse flow from one generator to another in the event of a steam line rupture. The main steam non-return check valve**s are free fall closed with no steam flow or differential pressure across the seat.** The valve disc and disc arm assemblies are similar to those installed in the MSIVs.

10.3.2.8 Main Steam Header

Downstream of the main steam isolation and non-return check valves, the 30-in. steam lines combine to form a 36-in. steam header that runs from the intermediate building into the turbine building. Inside the turbine building the 36-in. steam header splits into two 12-in. steam headers to the condenser steam dump valves; four 8-in. steam headers to the moisture separator reheaters; a 4-in. header supplying the gland seal system and air ejectors, and two 24-in. steam headers supplying the main turbine.

The two 12-in. headers feeding the steam dump system supply four steam dump valves to each header. Each header has an isolation valve that can be used to isolate the entire header.

A 4-in. steam line supplies the gland seal system to provide sealing steam to the turbine glands where the rotor extends out of the casing. At low power this sealing steam is supplied to the glands to prevent air leakage into the condenser through the turbine glands. At high power operation, sufficient steam leaks from the high-pressure turbine glands to supply the gland seal header for the low-pressure turbines.

Pressure taps installed on the main steam header provide vibration monitoring.

10.3.2.9 Main Turbine Stop Valves and Control Valves

The two 24-in. steam headers directing steam to the high-pressure element of the main turbine have one stop valve and two control valves each. The stop valves are swing disk stop valves keyed to a shaft that is actuated by high-pressure fluid off the electrohydraulic control system. The function of the stop valves is to provide overspeed protection for the turbine and to isolate the turbine from the steam header for maintenance. The stop valves cannot be opened against main steam pressure; therefore, stop valve bypass valves must be used to equalize pressure across the stop valve prior to opening.

Downstream of the stop valves the two steam lines each split into two headers providing four steam lines to supply the high-pressure element of the main turbine. Each of these four steam lines has a control valve. The control valves are single-seat plug type valves controlled by high-pressure fluid of the electrohydraulic control system. The function of the control valves is to control steam flow to the turbine.

Steam that exhausts from the high-pressure turbine contains up to 15% moisture. To prevent low-pressure turbine blade damage due to erosion from low quality steam, the steam exhausted from the high-pressure turbine is reconditioned by the moisture separator reheaters.

10.3.2.10 Moisture Separator Reheaters

The exhaust steam from the high-pressure turbine is passed through moisture preseparators, which are located at the exhaust plane of the high-pressure turbine. Up to 70% of the moisture is removed from the exhaust steam before entering the moisture separator section of moisture separator reheaters. Remaining moisture is removed, and the cycle steam enters the reheaters dry and saturated. The steam is then reheated to become super-heated to ensure no moisture is carried over to the low-pressure turbines. To reheat the high-pressure turbine exhaust, main steam is supplied to the moisture separator reheater tube bundle (Drawing

33013-1918, Sheets 1 and 2). From the 36-in. steam header four 8-in. headers supply one moisture separator reheater each. The steam admission valves are controlled by a timed opening controller to limit differential expansion during low-pressure turbine heatup. Water from the condensed reheating steam drains to the feedwater heaters 5A and 5B as extraction heating (Drawing 33013-1919, Sheets 1 and 2). The steam that is not condensed is returned to the high-pressure turbine exhaust piping. During unit startup, purging steam for the moisture separator reheater shells is supplied to each moisture separator reheater through 0.25-in. orifices tapping off the supply line to reheater 2A. The four moisture separator reheater shells have overpressure protection provided by a common header with one safety valve and five rupture disks. The safety valve setpoint is 175 psig, whereas all five rupture disks are set at 183 psig.

Condensate from the moisture separator section is drained to the heater drain tank. This drain system also includes emergency dump capability to the condenser.

Reheater tube bundles have been modified from two-pass systems to four-pass systems to improve tube bundle reliability and to ensure stable operation of drain systems.

The moisture separator reheaters 1A and 1B supply the No. 1 low-pressure turbine while moisture separator reheaters 2A and 2B supply the No. 2 low-pressure turbine. The steam lines from the moisture separator reheaters to the low-pressure turbine are 44-in. headers. Each header has one reheater stop valve and one intercept valve.

Each moisture separator reheater is provided with separate level control tanks and separate condensate lines for better control of level in all the drain systems.

10.3.2.11 Reheater Stop and Intercept Valves

The intercept valves provide overspeed protection for the main turbine by isolating steam to the low-pressure turbines. These valves are necessary due to the volume of steam remaining in the high-pressure turbine and moisture separator reheaters after the main turbine stop valves trip closed. The reheater stop valves provide backup protection for the turbine in the event the intercept valves fail. Both the reheater stop valve and intercept valve are 44-in. butterfly valves that are controlled by the electrohydraulic control system. From the reheater stop and interceptor valves, the steam from the moisture separator reheaters is supplied to the low-pressure turbines.

10.3.3 INSTRUMENTATION REQUIREMENTS

The main steam system uses instrumentation at various points to provide protection, control, and indicating functions. Points monitored in the main steam system include steam generator pressure, temperature, level, and steam flow, as well as steam header pressure and high-pressure turbine inlet and HP Turbine first stage pressures. Three pressure transmitters per steam generatorlocated in the 30" main steam piping in the Intermediate Building,provide signals for steam generator level control, reactor protection circuits, atmospheric relief, and indication on the main control board and auxiliary feedwater pump station. The instruments provide an alarm function on high pressure and a protective function on low pressure. In the

event of a main steam line break, safety injection is initiated when two-out-of three pressure transmitters from either steam generator reach the low pressure setpoint.

There are three narrow-range level channels for each steam generator used for steam generator level control, reactor protection circuits, and indications at the main control board and MODE 3 (Hot Shutdown) panel. There are also three wide-range level channels for each steam generator to monitor level from the tubesheet to the separators. The wide-range level channels are used for steam generator level control and indication. See Section 7.7.1.5 for a discussion of the steam generator level control system.

Two channels of steam flow indication from each steam generator are used for steam generator level control, reactor protection circuits, and indication at the main control board. A third steam flow channel for each steam generator has been added for steam generator level control and plant process computer system indication only. Remote indicators provide median signal selected wide-range level indication near the auxiliary feedwater pumps and the main feedwater regulating valves (MFRV).

Steam header pressure at the crossover header is used for main control board indication and for condenser steam dump system control, while high-pressure turbine inlet pressure provides main control board indication only.

Two channels of high-pressure first stage impulse pressure indication are used for steam generator level control, rod control system, electrohydraulic controller, reactor protection circuits, steam dump control system, anticipated-transient-without-scram (ATWS) mitigation actuation circuitry (AMSAC), and indication on the main control board.

10.4 CONDENSATE AND FEEDWATER SYSTEMS

10.4.1 DESCRIPTION

The condensate and feedwater systems function to condense the steam exhausted from the low-pressure turbines, collect and store this condensate, and then send it back to the steam generator for reuse.

10.4.2 FLOW PATH

The steam that leaves the exhaust of the low-pressure turbines enters the main condenser as saturated steam with low moisture content (9% to 11% moisture). This steam is condensed by the circulating water, which passes through the tubes of the condenser. The condensed steam collects in the condenser hotwell from which the condensate pumps take suction. The condensate pumps increase the pressure of the water and provide suction head for the condensate booster pumps (see Drawing 33013-1252).

The condensate booster pumps in turn provide sufficient suction head for the main feedwater pumps. Between the condensate pumps and the condensate booster pumps is the condensate demineralizer system, which maintains condensate water purity (see Section 10.7.7.4).

Between the condensate booster pumps and the main feedwater pumps are:

A. The air ejector condensers, which condense air ejector exhaust steam and preheat the condensate water (Drawing 33013-1235).

B. Gland steam condenser, which condenses the gland sealing steam and preheats the condensate water (Drawing 33013-1235).

C. Generator hydrogen coolers, which cool the hydrogen from the main generator and preheat the condensate water (Drawing 33013-1235).

D. Two trains of low-pressure feedwater heaters, which condense turbine extraction steam and preheat the condensate water (Drawing 33013-1233).

In addition to the condensate system, the heater drain system provides condensate to the suction of the main feedwater pumps. The main feedwater pumps increase the pressure of the water and provide water supply to the steam generators. Between the main feedwater pumps and the steam generators are:

AA. The high-pressure feedwater heaters, which condense turbine extraction steam, and the moisture separator reheater drains which both preheat the feedwater (Drawing 33013-1236, Sheets 1 and 2).

BB. Main Feedwater Regulating Valves (MFRV) and bypass valves that control the proper amount of feedwater to the steam generators. (These control valves are controlled by the steam generator water level control system, see Section 7.7.1.5.)

10.4.3 MAIN CONDENSERS

The main condensers are the radial flow type with semicylindrical water boxes bolted at both ends. The hotwell is the deaerating type with storage sufficient for 2 1/2 **minutes of** opera-

tion at maximum throttle flow with an equal free volume for surge protection. The hotwell has manholes, a water gauge glass to indicate the condensate level, four condensate outlets with coarse strainers, and anti-swirl devices. The hotwell is split in half by baffles with provisions for separate conductivity measurements in each half. Expansion joints are provided for all circulating water inlet and outlet connections.

The condenser is a two-shell, single-pressure, deaerating type surface condenser. Each shell is located below its low-pressure turbine and is connected to the low-pressure turbine outer casing by a skirt. This skirt contains a water-filled expansion joint and water-supplied by the gland sealing system that dampens turbine vibrations.

Each condenser has a heat transfer area of 125,000 ft^2 of 1-in. O.D. No. 22 BWG type 316 stainless steel tubes. The tubes are 40 ft long and are rolled to the 1-in. metal tubesheets. The condensers are designed for a circulating water temperature of 50°F with an approximate 24.5°F temperature rise to minimize the discharge temperature back into Lake Ontario. The condensers contain a total of 24,004 tubes.

Three of the four low-pressure heaters per train are located in the upper portion (neck) of each condenser shell.

Below the neck is the tube space. The condenser tubes run perpendicular to the centerline of the low-pressure turbines. The tubes are arranged in two bundles per condenser shell. Circulating water flows inside the tubes and provides the cooling medium for the main condenser.

In the centerline of each tube bundle a space is provided for air collection. Air is drawn from this space by the air ejectors. This maintains condenser vacuum.

The condensed steam falls into a collecting area in the condenser shell (hotwell). Each hotwell has two penetrations in its floor for the condensate pump suction header. Hotwell water level is controlled by either rejecting water when the level is high or making up water when the level is low. Control can be automatic or manual. During rejection, the condensate system pressure causes water to flow into the two condensate storage tanks. During makeup, the condenser vacuum and the level head in the condensate storage tanks produce water flow into the condenser hotwell. High and low hotwell levels produce alarms in the main control room. Hotwell level is displayed in the main control room and locally.

10.4.4 CONDENSATE SYSTEM

10.4.4.1 Condensate Pumps

The condensate pumps provide the initial flow energy to transport the water in the condenser hotwells to the steam generators. In doing so they supply sufficient suction pressure to the condensate booster pumps.

There are three 50%-capacity condensate pumps. Each pump is a seven-stage, vertical, centrifugal pump, powered by a 1500-hp electric motor. The pumps are controlled from the main control board. Each pump is rated at 6600 gpm with a discharge pressure of 285 psig.

The condensate pumps take suction on a common header through a suction strainer and a manual isolation valve. They discharge to a common header through a check valve and a manual isolation valve. Discharge header pressure is indicated on the main control board and will alarm on low pressure.

From the discharge header, water may be recirculated back to the condenser or sent through the condensate demineralizer system to the suction of the condensate booster pumps. The gland sealing system for miscellaneous gland seals taps off of the discharge of the condensate pumps. This supplies gland sealing water to the condensate pumps, heater drain pumps, condensate booster pumps, condenser skirt expansion joints, and other miscellaneous components. (See Drawing 33013-1905.)

10.4.4.2 Condensate Booster Pumps

The condensate booster pumps provide the second stage of flow energy addition to the condensate. They boost the flow supplied by the condensate pumps and consequently supply sufficient suction pressure to the main feedwater pumps.

There are three 50%-capacity condensate booster pumps (PCD01A, PCD01B, and PCD01C). Each is a horizontal single-stage centrifugal pump powered by a 500-hp induction motor. These motors were installed during the 2005 refueling outage in preparation for the extended power uprate modifications (EPU). The condensate booster pumps were modified to accomodate the EPU requirements. The pumps are controlled from the main control board.

The water leaving the condensate demineralizer system enters the condensate booster pump common suction header. Each pump takes a suction on the header via a manual isolation valve and discharges to a common discharge header via a check valve and a manual isolation valve. During condensate system startup, the condensate booster pumps are secured and are bypassed to recirculate water in the system through the demineralizers for system cleanup. When a condensate booster pump is started a check valve in the bypass line is forced shut.

From the discharge header of the condensate booster pumps, lines are tapped off to feed the feedwater pump gland seals and the condensate booster pump gland seals. The line that feeds the feedwater pump gland seals contains two parallel seal booster pumps that boost seal-water pressure during low load conditions when the pressure drop from the condensate booster pump to the main feedwater pump suction is small.

10.4.4.3 Low-Pressure Heaters

After leaving the air ejector and gland steam condensers, the condensate passes sequentially through four low-pressure heaters which extract heat from the steam discharged from the low-pressure and high-pressure turbines to heat the condensate and thereby increase system efficiency. Low-pressure heaters No. 1, 2, and 3 are located in the neck of the main condenser and extract heat from steam entering the condenser from the low-pressure turbines. Low-pressure heater No. 4 receives heat from the extraction steam from the high-pressure turbine.

10.4.4.4 Condensate Bypass Valve

The condensate bypass valve is in a line from the discharge of the condensate pumps to the suction of the main feedwater pumps. This bypass valve is operated from the main control board or automatically. The function of this valve is to maintain net positive suction head (NPSH) on the main feedwater pumps in the event that the heater drain pump flow is lost, e.g., during a load decrease. In automatic, the valve will open on a low main feedwater pump suction pressure and low main feedwater pump net positive suction head (NPSH), to provide the needed suction conditions to the main feedwater pumps to prevent cavitation. The opening of the bypass valve reduces the feedwater pump suction line resistance and hence increases the available NPSH. The valve must be closed manually when the low NPSH condition clears.

The main feedwater pump NPSH instrumentation computes the NPSH for each feedwater pump as a function of feedwater pump suction pressure, flow, and temperature. The main feedwater pump positive suction head system will open the condensate bypass valve and actuate a control room main control board annunciator when the available NPSH is less than the required minimum. Additionally, a plant computer point for NPSH margin will alarm prior to reaching a condition where available NPSH is less than required NPSH.

10.4.5 FEEDWATER SYSTEM

10.4.5.1 Main Feedwater Pumps

The main feedwater pumps supply the condensate and heater drain water to the steam generators. The system contains two 50% capacity feedwater pumps. Each pump is a single-stage centrifugal pump that operates nominally at 6811 rpm and has a capacity of 8800 gpm at a discharge pressure of 1030 psig. Each is driven by a 5500-hp, 1800-rpm electric motor. A geared speed increaser enables the pump to operate at 6811 rpm. Each pump has its own lubrication system including two ac pumps, one dc auxiliary pump, oil reservoir, oil coolers, and filters. The feedwater pumps are provided with high-pressure gland seal-water from the discharge header of the condensate booster pumps.

The main feedwater pumps are controlled from the main control board. The line from the condensate system taps into the common feedwater suction header. Each feedwater pump takes a suction on this header through a manual isolation valve. The pumps discharge to a common header via a check valve and the motor operated Main Feedwater pump discharge valve (MFPDV). The discharge valve closes automatically when the respective pump trips.

Between each main feedwater pump and the discharge check valve, an 8-in. recirculation line taps off. The recirculation lines return to the feedwater pump suction header and contain a control valve. A small part of the recirculation flow is directed to the main condenser where it is then pumped back to the main feedwater pump. The recirculation valve controller is on the main feedwater pump and feedwater pump seal panel outside the feedwater pump room. The valves will open whenever a main feedwater pump continuous flow falls below approximtely 33% full flow without recirculation. Feedwater flow is measured at the suction of each feedwater pump. The recirculation lines are sized to allow a minimum of 25% of full pump

flow to be recirculated. Full pump flow is defined as the best efficiency pump flow for the feedwater pump.

10.4.5.2 High-Pressure Heaters

The main feedwater pump discharge splits to pass through high-pressure heaters 5A and 5B. These heaters preheat the feedwater prior to its entry into the steam generators to increase plant efficiency.

High-pressure heaters 5A and 5B receive heat from the high-pressure turbine steam extraction and moisture separator reheater drains. Heater levels can be read locally or on the main control board. Heater temperatures and differential pressures are provided from the plant computer.

Downstream of the high-pressure heaters, the main feedwater lines join together into a header and an 8-in. recirculation line to the main condenser taps off.

This recirculation line contains a manual isolation valve and is used for cleanup operations during system startup.

10.4.5.3 Feedwater Flow Control

After the recirculation line taps off, the main feedwater header splits into two 14-in. lines that feed the steam generators. Located in each line is a 12" Main Feedwater Regulating Valve (MFRV) (FCV 4269 and 4270) and a 4-in. Main Feedwater bypass valve (FCV 4271 and 4272). These valves regulate the amount of feedwater sent to the steam generators. They are controlled by the steam-generator water level control system termed the advanced digital feedwater control system and described in Section 7.7.1.5. The valves are equipped with valve position sensors and their positions are displayed in the control room on the main control board.

The Main Feedwater bypass valve is used at low power levels to prevent erosion damage to the Main Feedwater Regulating Valve (MFRV). At highest power, the Main Feedwater Regulating Valve (MFRV) is in operation while the bypass valve is shut.

Hydraulic stabilizer operators are provided for the Main Feedwater Regulating Valve (MFRV) to dampen valve stem vibrations.

The feedwater lines leave the turbine building and enter the intermediate building penetration area where flow is measured and the auxiliary feedwater system taps into the main feedwater system. A check valve and an air operated isolation valve are located between the flow transmitters and the auxiliary feedwater piping. After the auxiliary feedwater connections, the main feedwater line penetrates containment and enters the steam generators.

10.4.5.4 Feedwater Flow Measurement

A feedwater flow measurement system, consisting of a single piping spool piece with eight ultrasonic transducers and an electronics package, can be used to determine the absolute feedwater flow rate for the plant calorimetric. The spool piece is installed in the 20-in.-O.D. com-

mon feedwater line between the No. 5 feedwater heaters and the feedwater regulating valves in the turbine building.

The ultrasonic transducers generate a signal through the feedwater. A feedwater flow processor converts the transducer signals into rate of flow. The feedwater flow measurement system is designed to operate with an accuracy of ±0.75% or better. The ultrasonic flow measurement data can be used only for calorimetric calculations.

Feedwater flow measurement required for safeguards protection actuation and steam generator level control is obtained from the feedwater flow venturi nozzles. These feedwater flow venturi nozzles are also used to perform plant calorimetric power calculations. In the 1980's and 1990's Ginna experienced venturi fouling with these nozzles. Since feedwater venturi nozzle fouling results is masking true feedwater flow, it results in an artificially high-indicated feedwater flow rate and causes actual thermal power to be depressed relative to indicated thermal power. The ultrasonic system does not experience this degradation. However, since the late 1990's, Ginna no longer experienced feedwater venturi fouling. Therefore, the feedwater venturi nozzles are the preferred flow indication for performing plant calorimetric power calculations.

10.5 AUXILIARY FEEDWATER SYSTEMS

10.5.1 INTRODUCTION

The auxiliary feedwater systems consist of a preferred auxiliary feedwater system and a standby auxiliary feedwater system (SAFW). The preferred system consists of two motor-driven pumps and one turbine-driven pump. Normally, each motor-driven pump supplies one steam generator, but the alignment can be altered to allow either motor-driven pump to supply either or both steam generators. The turbine-driven pump normally supplies feedwater to both steam generators. Each pump supplies the steam generators through a normally open, motor-operated, discharge valve.

The standby auxiliary feedwater system (SAFW) was installed to provide an independent system capability following a high-energy line break event which could render inoperable the three preferred auxiliary feedwater pumps. The standby auxiliary feedwater (SAFW) system consists of two motor-driven pumps located in a plant area separate from the preferred auxiliary feedwater system. The standby auxiliary feedwater system (SAFW) is manually actuated and aligned so that each pump supplies one steam generator.

10.5.2 DESIGN BASES

10.5.2.1 Functional Requirements

The main function of the auxiliary feedwater system is to maintain the steam generator water inventory when the normal feedwater system is not available. The auxiliary feedwater system is an engineered safety feature because it provides a secondary heat sink for residual heat removal and therefore provides core protection and prevention of reactor coolant release through the pressurizer safety valves.

The reactor plant conditions which impose safety-related performance requirements on the design of the auxiliary feedwater system are as follows:

A. Loss of main feedwater transient.
   1. Loss of main feedwater with offsite power available.
   2. Loss of main feedwater without offsite power available.
   3. Rupture of feedwater line.

B. Rupture of a main steam line.

C. Loss of all ac power (offsite and onsite).

D. Loss-of-coolant accident.

E. Cooldown.

The above transients are discussed in Chapter 15 and *References 1* and *2*.

Following a reactor trip, decay heat is dissipated by evaporating water in the steam generators and venting the generated steam either to the condensers through the steam dump or to the atmosphere through the Main Steam Safety Valves (MSSV) or the Atmospheric Relief Valves

(ARV). Steam-generator water inventory must be maintained at a level sufficient to ensure adequate heat transfer and continuation of the decay heat removal process. The water level is maintained under these circumstances by the preferred auxiliary feedwater system which delivers an emergency water supply to the steam generators. The preferred auxiliary feedwater system is capable of functioning for extended periods, allowing time to proceed with an orderly cooldown of the plant to the reactor coolant temperature where the residual heat removal system can assume the burden of decay heat removal. The preferred auxiliary feedwater system flow and the emergency water supply capacity are sufficient to remove core decay heat, reactor coolant pump heat, and sensible heat during the plant cooldown. The preferred auxiliary feedwater system can also be used to maintain the steam-generator water level following a loss-of-coolant accident, in order to facilitate additional decay heat removal as necessary.

10.5.2.2 Preferred Auxiliary Feedwater System

The preferred auxiliary feedwater system is designed to provide high-pressure flow using two motor-driven pumps with a capacity of 200 gpm each or one turbine-driven pump with a capacity of 400 gpm.

The water supply source for the preferred auxiliary feedwater system is redundant. The main source is by gravity feed from the condensate storage tanks (CST) and the backup supply is provided by the service water (SW) system with pumps which can be powered by the diesel generators. An additional supply of feedwater can be provided through the yard fire hydrant system to the condensate storage tanks (CST).

The turbine-driven auxiliary feedwater pump (TDAFW) can supply 200% of the required feedwater and one motor-driven auxiliary feedwater pump (MDAFW) can supply 100% of the required feedwater for removal of decay heat from the plant. The minimum amount of water in the condensate storage tanks (CST) (24,350 gal) is the amount needed to remove decay heat for 2 hr after reactor scram from full power. An unlimited supply is available from the lake via either leg of the plant service water (SW) system for an indefinite time period.

The preferred auxiliary feedwater system is designed to Seismic Category I and Class 1E criteria and the automatic initiation signals and circuits are designed to comply with the requirements of IEEE 279-1971.

10.5.2.3 Standby Auxiliary Feedwater System (SAFW)

The purpose of the standby auxiliary feedwater system is to provide auxiliary feedwater backup in the event the preferred auxiliary feedwater system is inoperable due to a high-energy line break or other event. The standby auxiliary feedwater system (SAFW) is capable of being brought into service by operator action in the control room if the preferred auxiliary feedwater pumps, which start automatically, are not operative. The standby auxiliary feedwater system (SAFW) can deliver emergency feedwater to each steam generator via two motor-driven pumps of 235-gpm flow capacity each.

Seismic Category I sources of water are available for use by the standby auxiliary feedwater system (SAFW) via connections to both loops of the service water (SW) system. In addition, a 10,000-gal condensate test tank is available for periodic tests of the system. Connections to utilize the yard fire hydrant loop have been installed and procedures put in place to use this source if the service water (SW) supply from the screen house is lost. A line from the yard fire loop to a hose connection in the standby auxiliary feedwater building is run underground and thus protected from tornado and missile damage. A fire hose mounted in a hose cabinet in the building is used to supply the standby auxiliary feedwater pumps (SAFW) from the yard fire loop hose connection.

Essential components of the standby auxiliary feedwater system (SAFW) are designated Seismic Category I. The structure housing the pumps and the system piping also meet Seismic Category I criteria. The pump motors are powered by two redundant Class 1E electrical systems. The system is designed to sustain a single active failure and still deliver 235 gpm flow to either steam generator.

10.5.3 SYSTEMS OPERATION AND DESCRIPTION

10.5.3.1 Preferred Auxiliary Feedwater System

10.5.3.1.1 Normal Lineup

The flow diagram of the preferred auxiliary feedwater system is shown in Drawing 33013-1237.

The preferred auxiliary feedwater system is normally lined up when the reactor is at power to respond to any situation that could cause a loss of normal feedwater flow to the steam generators. Two motor driven AFW (MDAFW) trains, one turbine driven AFW (TDAFW) train, and two standby AFW (SAFW) trains shall be operable in MODES 1,2 and 3. The turbine-driven auxiliary feedwater pump (TDAFW) must be shown to be operable prior to exceeding 5% power. (See the Technical Specifications.) The normal lineup is for each motor-driven auxiliary feedwater pump (MDAFW) to supply one steam generator; however, the pumps can be cross-connected to feed either or both steam generators. The turbine-driven pump discharges in a common header, then to either or both steam generators. A cross-connect between the motor-driven and turbine-driven pumps is provided to allow for continuous makeup to the steam generators during extended MODE 3 (Hot Shutdown) conditions by using the motor-driven auxiliary feedwater pumps (MDAFW). All pumps have recirculation lines back to the condensate storage tanks (CST).

10.5.3.1.2 Startup and Cooldown Operations

The system is used to maintain steam generator level during startup because a certain loading is required prior to starting a main feedwater pump. After reactor power is at about 2% to 4% and a main feedwater pump has been started, the system is shut down and set up for automatic start operations.

The preferred auxiliary feedwater system also supplies feedwater to the steam generators when the reactor is shut down. Steam, after being heated by residual heat from the reactor, is drawn from the steam generator and sent to the condenser steam dump system (or atmo-

spheric relief) at a controlled rate for cooldown. The preferred auxiliary feedwater pumps are used to maintain levels in the steam generators.

Pneumatically operated valves installed around the motor-operated valves in the discharge piping of the motor-driven auxiliary feedwater pumps (MDAFW) provide a means of controlling preferred auxiliary feedwater flow from the motor-driven pumps during startup and cooldown without opening the cross-tie to the turbine-driven auxiliary feedwater pump (TDAFW) piping.

Both motor-driven preferred auxiliary feedwater pumps (MDAFW) are not normally operated with the crossover valve(s) open as a precaution against the potential for pump overheating due to a strong/weak pump interaction which may exist.

10.5.3.1.3 Transient Operations

The motor-driven preferred auxiliary feedwater system pumps will start if one steam generator level decreases to a low-low level of 17%. A positive 13.9% error has been included in the setpoint to account for errors which may be introduced into the steam-generator level measurement system at a containment temperature of 286°F as determined by an evaluation performed on temperature effects on level systems as required by IE Bulletin 79-21. The turbine-driven auxiliary feedwater pump (TDAFW) will automatically start if the level in both steam generators decreases to a low-low level of 17%. Additional information is provided in Section 7.3.

All three preferred auxiliary feedwater pumps will start on loss of offsite power. However, if power is lost to the engineered safety features bus supplying power to an preferred auxiliary feedwater pump, the motor will not start until the associated emergency diesel generator supplies power to that bus. The turbine-driven pump has the added feature of starting immediately on loss of power (undervoltage) to both 4.16-kV service buses. In this situation, the preferred auxiliary feedwater pumps will supply water to each steam generator to maintain level and the atmospheric relief valves will be used to maintain MODE 3 (Hot Shutdown) temperatures or for cooling the reactor coolant system.

Upon receipt of a safety injection signal, the two motor-driven preferred auxiliary feedwater pumps will start and feed the steam generators to maintain their inventory of water to be used for control of reactor coolant system temperature or cooldown.

10.5.3.1.4 System Description

The two motor-driven preferred auxiliary feedwater pumps (MDAFW) are driven by 460V three-phase, 300 hp, 1780 rpm motors, and are capable of pumping 200 gpm at 1085 psig. Each pump contains an auto-start oil pump which will start when the auxiliary feedwater pump starts. The feedwater pumps have splash-lubricated gears, and the motors are of an open, drip-proof design. They are powered from the engineered safety features bus with an emergency diesel backup. The turbine-driven auxiliary feedwater pump (TDAFW) receives steam from either or both steam generators and is capable of pumping 400 gpm at 1085 psig. It has both ac and dc oil pumps. If oil pressure drops below 3.0 psig sensed at the throttle trip valve, the pump will trip. A steam line branches off from the main steam line from each

steam generator and joins to supply steam to the turbine-driven auxiliary feedwater pump (TDAFW). See Drawing 33013-1231. Motor-operated valves 3504A and 3505A are opened to supply steam to the auxiliary feedwater pump turbine. The steam admission check valves in each branch line (valves 3504B and 3505B) isolate one steam generator from the other in the event of a steam line break. The check valves are equipped with external counterweight lever arms fixed to the valve shafts as an aid in closing the valves. The arms also serve to indicate valve position, particularly during quarterly inservice testing.

Water is supplied to the pumps by means of gravity feed from the two 30,000-gal nominal capacity condensate storage tanks (CST). For system operation, a minimum of 24,350 gal total is required (see Section 10.7.4). The service water (SW) system provides backup water supply to the preferred auxiliary feedwater pumps. Alternate water supply to directly fill the condensate storage tanks can be provided by alignment of the fire water system (via valve 5158C) or the city water system. Water from the condenser hotwells and the all-volatile-treatment storage tank can also be made available to these pumps (see Table 10.1-1). The condensate storage tanks (CST) are significant to safety for pressure boundary integrity to maintain sufficient inventory for the preferred auxiliary feedwater pumps. The tanks are nonseismic. The backup service water (SW) system supplying the preferred auxiliary feedwater pumps is safety-related and Seismic Category I.

Condensate (blocking water) is supplied to the suction side of the motor driven auxiliary feedwater (MDAFW) pumps, and available to the turbine driven auxiliary feedwater (TDAFW) pump but normally isolated from the TDAFW pump. Pressure regulated blocking water, higher than SW pressure, prevents leakage of service water (SW) into the auxiliary feedwater system. In addition, the system provides pressurization of the MDAFW pump instrument tubing connections.

Redundant level indications and low level alarms in the control room are provided for the condensate storage tanks (CST). This allows the operator to anticipate the need to make up water or transfer to an alternate supply and prevent a low suction pressure at the auxiliary feedwater pumps.

Safety-grade flow indication instrumentation is provided for each steam generator. The individual steam generator auxiliary feedwater flow circuitry is powered from separate battery-backed instrument buses. For each preferred auxiliary feedwater pump, there is a primary and secondary flow instrumentation channel. The primary channel indicates flow and, for the motor-driven pumps, controls the individual discharge valves. The secondary flow instrumentation indicates flow only. The primary and secondary channels are powered from opposite instrument buses. The primary and secondary flow indication is provided on the main control board by a dual-movement vertical-scale indicator.

The motor-driven and turbine-driven pumps each have an automatically controlled minimum flow recirculation system sized and periodically tested to ensure that sufficient minimum flow will be provided under all conditions, during which the pump flow would be either automatically or manually throttled to the air-operated control valve setting, to prevent pump damage from overheating.

Chemistry control for the preferred auxiliary feedwater system is provided through a connection to the chemical addition tanks.

10.5.3.2 Standby Auxiliary Feedwater System (SAFW)

The flow diagram of the standby auxiliary feedwater system (SAFW) is shown in Drawing 33013-1238. The standby auxiliary feedwater system (SAFW) is manually started and controlled from the control room. In the event that an existing preferred auxiliary feedwater pump fails to function properly after a high-energy pipe break outside containment, or all means of feedwater are lost, the operator would be alerted by existing control room indication. The operator would manually remove the affected preferred auxiliary feedwater pump from the diesel generator and place the standby pump (SAFW) into operation on the same diesel. Flow is controlled by throttling the discharge valve. For operational tests, manually operated valves in the supply line from the condensate test tank must be opened and adequate tank level verified before starting the pump or pumps.

The system consists of two motor-driven pumps capable of 235 gpm at 1085 psig. Water is supplied by the respective service water (SW) loop of the pumps. Cross-connecting the system is possible; however, the usual lineup is for two separate, independent sources of water. A hose connection from the fire water system to the standby auxiliary feedwater pumps (SAFW) provides a means for decay heat removal in the event of a loss of service water (SW). A fire hose from a yard fire loop hose connection located inside the standby auxiliary feedwater pump (SAFW) building can be attached to fittings on the suction piping to the standby auxiliary feedwater pumps (SAFW) (see Section 10.5.2.3). The motor-driven pumps are supplied by engineered safety features buses for reliable power supplies.

Condensate (blocking water) is supplied to the suction side of the standby auxiliary feedwater (SAFW) pumps. Pressure regulated blocking water, higher than SW pressure, prevents leakage of service water (SW) into the auxiliary feedwater system. In addition, the system provides pressurization of the SAFW pump instrument tubing connections.

The pumps each have a minimum flow recirculation system similar to the preferred auxiliary feedwater pumps to prevent pump damage from overheating.

A condensate test tank with a 10,000-gal capacity is provided to store condensate quality water as a source of supply for periodic testing of the system.

10.5.4 DESIGN EVALUATION

10.5.4.1 System Evaluation

The design and qualification of the auxiliary feedwater systems has been reviewed by the NRC both as part of the NUREG 0737 requirements review and the Systematic Evaluation Program (SEP).

The NRC concluded in the safety evaluation related to Amendment No. 29 to the Ginna Provisional Operating License (*Reference 3*) that the standby auxiliary feedwater system (SAFW) is an acceptable backup to the preferred auxiliary feedwater system for maintaining the plant in a safe shutdown condition, and in evaluations under NUREG 0737, Items

II.E.1.1 and II.E.1.2 (*References 4 through 6*), that the preferred and standby auxiliary feedwater systems (SAFW) meet NRC requirements.

10.5.4.2 Alternating Current Independence of the Turbine-Driven Auxiliary Feedwater Pump (TDAFW)

As part of the review for NUREG 0737, Item II.E.1.1, Ginna Station was evaluated to determine if there was an essential dependence of the turbine-driven auxiliary feedwater pump (TDAFW) system on ac power. It was determined that the only ac dependence was the need for service water (SW) cooling of the lube-oil for the turbine-driven pump. The turbine-driven **auxiliary** feedwater pump (TDAFW) has an ac lube-oil pump and a dc lube-oil pump. **The DC Lube Oil Pump can be powered by a portable DC generator during a loss of both AC and DC plant power.** These pumps direct the oil through a heat exchanger, which depends on the ac-powered service water (SW) system pumps to cool the oil. The outboard (thrust) bearing of the pump is also provided directly with service water cooling through a water jacket within the bearing housing. The inboard pump radial bearing is cooled by an oil bath without an external source of cooling water. In the event of a total loss of ac power, lube-oil cooling capability for the turbine-driven pump will be lost due to the loss of ac power to the service water (SW) pumps.

An NRC criterion (Recommendation GL-3 of NUREG-0737 Action Item II.E.1.1) was that the as-built plant should be capable of providing the required preferred auxiliary feedwater flow for at least 2 hr from one preferred auxiliary feedwater pump train independent of any ac power source. As part of the 48 hour Endurance Test conducted on March 6-8, 1981, RG&E performed a test with service water (SW) secured to the turbine's lube oil cooler and the pump outboard (thrust) bearing. The pump was run for a duration of 3 hours 55 minutes in one sequence without any service water cooling and for 15 hours in a later sequence without service water cooling to the turbine lube oil cooler. During the first sequence, excessive steaming from the floor drains with service water secured caused the reinitiation of service water (SW) to the pump thrust bearing. The Endurance Test was run in the recirculation mode with 125 gpm passing through the recirculation line back to the condensate storage tanks (CST). Throughout the testing without service water supplied, the pump outboard (thrust) bearing, which is service water cooled, and the inboard pump radial bearing (oil bath) were within manufacturer's limits of 165°F. The turbine governor bearing return oil temperature and turbine inboard bearing return oil temperature, as well as the turbine lube oil reservoir temperature, stabilized well within the manufacturer's limit of 180°F.

In addition to the Endurance Test, another test was performed on April 17, 1981, for a period of 2 hours without service water cooling to the outboard pump bearing and turbine lube oil cooler, this sequence with the pump delivering 200 gpm (100 gpm to each steam generator). This test was performed to simulate accident conditions. This test also confirmed that oil temperature, as well as pump and turbine bearing temperatures stabilized within acceptable limits.

In a letter dated June 8, 1981 (*Reference 7*) RG&E submitted the test results for these tests. In a letter dated June 16, 1982 (*Reference 5*) the NRC concluded that, based on the results of the recirculation flow test and the 2 hour test on April 17, 1981, RG&E has shown that the tur-

bine-driven auxiliary feedwater system (TDAFW) does not have an essential ac power dependence.

To protect against a total loss of service water or fire water backup cooling to the TDAFW pump lube oil cooler and thrust bearings, a modification (PCR 2004-0021) was installed on 10/06/2004 to provide TDAFW pump self cooling. This alignment is outside the design basis of the plant and is procedurally driven.

10.5.5 INSTRUMENTATION

10.5.5.1 Motor-Driven Auxiliary Feedwater Pump (MDAFW) Controls

Both the preferred and standby auxiliary feedwater motor-driven pumps are powered by independent ac emergency buses. The loading of the preferred auxiliary feedwater motor-driven pumps onto their respective 480-V ac emergency buses is part of the postaccident automatic load sequencing. The standby auxiliary feedwater pumps (SAFW) are manually started and controlled from the control room. The standby auxiliary feedwater (SAFW) motor-driven pumps are interlocked with the preferred auxiliary feedwater motor-driven pumps so that a standby pump can only be energized when its associated preferred auxiliary feedwater pump is deenergized. The primary purpose of the interlocks is to prevent both pumps from being energized simultaneously and overloading the emergency diesel generator on loss of offsite power. Also, the standby auxiliary feedwater pumps (SAFW) supply service water (SW) to the steam generators and are intended to be used only when the preferred auxiliary feedwater pumps, which supply condensate to the steam generators, are not available.

The actual interlocks are formed by using switches from the breakers supplying the preferred auxiliary feedwater pumps as permissives to close the breakers supplying the standby auxiliary feedwater pumps (SAFW). The main breakers are equipped with cell switches to provide the permissives when the main breakers are removed for testing or repair.

10.5.5.2 Preferred Auxiliary Feedwater System Initiation

The following signals are used for automatic initiation of the main auxiliary feedwater system:

Motor-driven pumps.

1. Low-low steam generator level (two-out-of-three channels on either steam generator).
2. Trip of both main feedwater pumps.
3. Safety injection.
4. Anticipated-transient-without-scram mitigation system actuation circuitry (AMSAC) actuation.

Turbine-driven pump.

1. Low-low steam generator level (two-out-of-three channels on both steam generators).
2. Loss of voltage on both 4-kV buses. (11A and 11B)
3. AMSAC actuation.

The preferred auxiliary feedwater system may be manually initiated from the control room by starting the motor-driven auxiliary feedwater pumps (MDAFW) individually; upon pump start, the associated discharge valve opens and is automatically throttled to less than 230 gpm. (See Section 7.4.1.2.)

The automatic open signals to the steam admission valves of the turbine-driven pump can be overridden by the operator to prevent excessive cooldown of the primary system. Indication in the form of an annunciator will alert the operator to the fact that the pump automatic start signals have been overridden.

The system design allows one channel to be bypassed for maintenance, testing, and calibration during power operation without initiating a protective action. When a channel is bypassed for testing, the bypass is accompanied by a single channel alert and channel status light actuation in the control room.

The automatic start of the preferred auxiliary feedwater motor-driven pumps resulting from the tripping of both main feedwater pumps may be defeated during startup or shutdown when the turbine generator is off the line. The defeat switch is automatically bypassed when the turbine is latched. This bypass is alarmed in the control room.

The only interaction between the preferred auxiliary feedwater system automatic initiation circuits and normal system control functions occurs in the narrow-range steam-generator level instrumentation. These level instruments are used for both protection (reactor trip and preferred auxiliary feedwater initiation) and normal control functions in the main feedwater system. The control signals are separated from the protection signals by isolation transformers so that a malfunction in the control circuits will have no effect on the protection signals. The steam-generator level control system is discussed in Section 7.7.1.5.

10.5.5.3 Auxiliary Feedwater System Alarms

The following individual alarms are provided on the main control board to alert the operator concerning the operation of the auxiliary feedwater system:

1. Low-low steam-generator level (three channels each).
2. Two-out-of-three low-low steam-generator levels (one channel each).
3. Three-out-of-three low-low steam-generator levels (one channel each).
4. Emergency shutdown equipment local control.
5. Engineered safety features breaker trip.
6. Engineered safety features equipment lock-off.
7. Preferred auxiliary feedwater bypass in defeat lockout.
8. Single channel alert.
9. Standby auxiliary feedwater pump (SAFW) C or D trip.
10. Standby auxiliary feedwater pump (SAFW) transfer or test switch off normal (one channel each).

11. Standby auxiliary feedwater pump (SAFW) high discharge flow (one channel each).
12. Standby auxiliary feedwater pump (SAFW) high discharge pressure (one channel each).
13. Standby auxiliary feedwater heating, ventilation, and air conditioning trouble.

10.5.5.4 Auxiliary Feedwater Performance Indications

The capability to evaluate the performance of the preferred and standby auxiliary feedwater systems at Ginna Station is provided by the following indications:

1. preferred auxiliary feedwater motor-driven pump flow to each steam generator (two channels each).
2. preferred auxiliary feedwater turbine-driven pump discharge flow (two channels).
3. preferred auxiliary feedwater turbine-driven pump flow to each steam generator (two channels each).
4. Standby auxiliary feedwater motor-driven pump flow (one channel each).
5. Preferred auxiliary feedwater pump discharge pressure.
6. Standby auxiliary feedwater pump (SAFW) discharge pressure.
7. Narrow-range steam generator level (three channels each).
8. Wide-range steam generator level nominal (three channels each).
9. Preferred and standby auxiliary feedwater pump status indication.
10. Preferred and standby auxiliary feedwater valve position indication.
11. Condensate storage tank levels (one channel per tank).

Since the discharge header from the turbine-driven pump branches to supply both steam generators, an additional channel of safety-grade flow instrumentation is provided in each line. Safety-grade wide-range steam-generator level indication is provided as a backup. The standby auxiliary feedwater system (SAFW) provides a single channel of safety-grade flow instrumentation for each pump. The flow indication channels are tested in accordance with the Technical Specifications.

10.5.5.5 Control From Outside the Control Room

For the purpose of achieving safe shutdown in the event of an unmitigated fire, the turbine-driven auxiliary feedwater pump (TDAFW) is dependent only upon dc power for operation of the turbine auxiliary oil pump. A manual start/stop switch and a manual local/remote switch with a control room alarm for the local position are included on the intermediate building emergency local instrument panel **(IBELIP)** (see Section 7.4.3.7) that permits transfer of control from the control room to the panel when local control of the dc-lube-oil pump is required.

The IBELIP and the TDAFW Pump DC Lube Oil Pump can be powered by a portable DC generator during a loss of both AC and DC plant power. A manual open/close switch and a manual local/remote switch with a control room alarm for the local position are also included on the intermediate building emergency local instrument panel (see Section 7.4.3.7)

that permits transfer of control from the control room to the panel when local control of the discharge valve is required.

REFERENCES FOR SECTION 10.5

1. Letter from L. D. White, Jr., RG&E, to D. M. Crutchfield, NRC, Subject: NRC Requirements for Auxiliary Feedwater Systems, dated July 14, 1980.

2. Letter from K. W. Amish, RG&E, to J. F. O'Leary, NRC, Subject: Effects of Postulated Pipe Breaks Outside Containment, dated May 24, 1974.

3. Letter from D. L. Ziemann, NRC, to L. D. White, Jr., RG&E, Subject: Amendment No. 29 to Provisional Operating License No. DPR-18, dated August 24, 1979.

4. Letter from D. M. Crutchfield, NRC, to J. E. Maier, RG&E, Subject: Safety Evaluation Report, Implementation of Recommendations for Auxiliary Feedwater Systems, dated January 29, 1981.

5. Letter from D. M. Crutchfield, NRC, to J. E. Maier, RG&E, Subject: Auxiliary Feedwater System Evaluation, NUREG 0737 Item II.E.1.1, dated June 16, 1982.

6. Letter from D. M. Crutchfield, NRC, to J. E. Maier, RG&E, Subject: Auxiliary Feedwater System Automatic Initiation and Flow Indication (TMI Action Plan Item II.E.1.2), dated August 18, 1982.

7. Letter from J. E. Maier, RG&E, to D. M. Crutchfield, NRC, Subject: NRC Requirements for Auxiliary Feedwater Systems, dated June 8, 1981.

10.6 CIRCULATING WATER SYSTEM

10.6.1 DESIGN BASES

The function of the circulating water system is to provide a reliable supply of water to condense the steam exhausted from the low-pressure turbines. The water source and sink for the circulating water system is Lake Ontario.

The circulating water system is a nonseismic piping system whose primary function is to remove heat from the steam cycle via the main condensers. To achieve this end, the system consists of an intake structure specially designed to minimize the possibility of clogging, an inlet tunnel, four traveling screens, two circulating water pumps, and a discharge canal.

10.6.2 SYSTEM DESCRIPTION

The flow diagram of the circulating water system is shown in Drawing 33013-1885, Sheets 1 and 2.

10.6.2.1 Intake Structure

The circulating water system is designed to provide a reliable supply of Lake Ontario water, regardless of weather or lake conditions, to the suction of the screen house pumps. The Lake Ontario intake is designed to withstand, without loss of function, ground accelerations of 0.2g, acting in the vertical and horizontal planes simultaneously. To meet these high reliability requirements, the intake structure is 3100 ft out from shore and is completely submerged below the surface of the lake. Even an occurrence of historical low water level will result in no less than 15 ft of water over the inlet structure. The probability of water stoppage due to plugging of the inlet has been reduced to an extremely low value by incorporating certain design features in the system. The intake structure is an octagonal shaped structure containing electrically heated screen racks in each of the eight faces. Four (4) separate circuits (A-D) provide electrical power to the intake structure screen racks. Each of the four circuits provides electrical power to two (2) adjacent faces of the structure. Heavy screen racks with bars spaced 14-in. apart, center to center, will prevent large objects from entering the system.

At conditions of full flow (354,600 gpm) the velocity at the intake screen racks is 0.8 ft/sec. Plant cooling requirements during accident conditions would only be 10,000 gpm with an inlet velocity of 0.02 ft/sec. In addition, water enters the screen racks in a 360° circle, protecting against stoppage by a single large piece of material. The low velocity plus the submergence provides assurance that floating ice will not plug the intake. The only phenomenon that might contribute to the plugging would be the accumulation of frazil ice on the screen racks. Frazil ice is a type of lumpy, crystallized ice that forms on objects in a turbulent stream of supercooled water. To minimize such a formation, the bars are separated 14-in. on center, making it unlikely that frazil ice could support itself over a span of this distance. The bars are also equipped with dual voltage electric heaters which may be transferred between voltages via a double throw transfer switch. The electric heaters keep the metal bars above 32°F thus minimizing the adhesive characteristics of frazil ice to metal surfaces.

10.6.2.2 Inlet Tunnel

To meet the high reliability requirements, the intake system is completely submerged below the surface of the lake as shown in Figures 10.6-2 and 10.6-3. A 10-ft diameter, reinforced-concrete-lined tunnel driven through bedrock extends 3100 ft in a northern direction from the shore line. The tunnel slopes downward over its 3100-ft length for a total elevation decrease of 10 ft. From underneath the screen house, the tunnel rises vertically and connects to a reinforced-concrete inlet plenum in the screen house. Warm water recirculation is provided in the screen house inlet plenum to melt any ice that might reach this point.

10.6.2.3 Traveling Screens

Before the inlet plenum water reaches the pump suctions, the water passes through the four parallel traveling screens (see Figure 10.6-3). **The four installed traveling screens are fitted with 3/16 in. x 1 in. smooth top, stainless steel mesh, and are similar in concept to vertical conveyor belts. As debris collects on the screens, they rotate carrying the debris. Service water pump discharge or electric-driven fire pump discharge is used to periodically flush the debris off the screens into a collecting trough where it is carried away. The screens can operate at two speeds, slow and fast, and in two modes, automatic and manual.**

10.6.2.4 Circulating Water Pumps

The station has two (2), centrifugal type, vertical, circulating water pumps. Each pump has a rated flow of 178,000 gpm at 212 rpm with a 33.3 ft. head and 12 ft. submergence. Nominal flow with both pumps operating is approximately 333,000 gpm when driven by 208 rpm, 2000 hp induction motors.

10.6.2.5 Condenser Inlet and Outlet Valves

The condenser inlet and outlet valves, two sets per pump, are 72-in. butterfly type valves with rubber seats. The valves can be operated via switches on the back of the main control board or manually operated. They are interlocked with the circulating water pumps. The main condensers are described in Section 10.4.3.

10.6.2.6 Condensate Cooler

The circulating water system also contains a condensate cooler that is used to cool condensate to the hydrogen coolers and air ejectors. The cooler has **9551** ft^2 of heat transfer area and condensate flow is adjusted for desired temperature control.

10.6.2.7 Screen House

The screen house is located 115 ft north of the turbine building and 80 ft south of the lake shore. It contains the traveling screens, circulating water pumps, service water pumps, fire water pumps, plant heating boiler, the chlorination system, engineered safety features buses 17 and 18, and safety-related 480-V ac motor control center G (MCCG).

10.6.2.8 Piping and Discharge Canal

Water leaves the circulating water pumps via 90-in. carbon steel, pipe lines which run southward 63 ft where they have a common valveless cross-tie pipe. The lines continue then divide into two 72-in. wyes and enter the two condensers through the condenser inlet butterfly valves. The 72-in. lines exit the condensers where the water passes through the condenser outlet butterfly valves and discharges into the respective condenser discharge tunnel. These two discharge tunnels are each 8-ft wide and 7-ft high and are rectangular in shape. They run west 95 ft and then turn north towards the discharge canal. Six feet north of the turbine building the two tunnels direct flow into two 96-in. pre-stressed, reinforced-concrete pipes (96-in. I.D. and 8-in. thick). These two pipes run 160 ft and enter the discharge canal at the bottom of a seal well. The purpose of a seal well is to provide a water seal and prevent air from entering the condensers via the discharge lines.

The discharge canal is on the north side of the screen house and is 40-ft wide. It contains a fish screen to prevent small fish from entering the discharge tunnel or the screen house. The canal then turns north and extends another 35-ft where it enters Lake Ontario. This last 35 ft is lined with armour stones. The canal is rectangular and is constructed of reinforced concrete. The floor rises gradually from the seal well (231.5 ft) to an elevation of 238 ft. This elevation is maintained throughout the rest of the canal. The canal has recirculation lines that can direct warm discharge water into the screen house inlet plenum for ice melting.

10.6.2.9 Flooding Protection

Protection of safety-related equipment from flooding due to a break or leakage in the circulating water system is provided. This protection consists of tripping the circulating water pumps when a leak is detected and the existence of a dike around areas containing safety-related equipment of sufficient height to accommodate a maximum calculated water level.

The tripping of the circulating water pumps is accomplished by redundant two-out-of-three logic receiving level information from the circulating water pump pit in the screen house and from the condenser pit in the turbine building. Three mechanically protected float switches have been installed at each end of the two pits at a height of 2 ft off their respective floor elevations. The switches feed into a fail-safe group of logic relays in the relay room which in turn trip both circulating water pumps whenever water reaches a level of 2 ft at any of the four level switch locations. The logic circuit has been designed to the IEEE Standard 279-1971 to the greatest degree practicable.

The second part of the protection system is a permanently installed, non-movable Seismic Category I dike in the screen house, and elevated doorways between the turbine building and the control building, which have been built to contain the water that may escape from the circulating water system.

For the purposes of calculating the maximum water level a different approach was used for the turbine building and the screen house.

In the turbine building three contributions can be made to the maximum water height. The first contribution is the volume of water that could flow onto the turbine hall floor before a

water buildup would be seen by the level switches and cause a trip of the circulating water pumps. Assuming that there is an unrestricted flow from all pipes in the turbine building, the volume of water that would flow from the break would result in a water height of 5.32 in. After the circulating water pumps are tripped, more water would flow onto the floor because of the kinetic energy stored in the pump rotor and in the water moving in the circulating water piping. The highly conservative maximum contribution to the level from this source is 3.12 in. The third contribution would come from possible wave action caused by a safe shutdown earthquake. The level contribution from this source would be 0.48 in. and when added to the other contributions results in a total of 8.92 in. The elevated doorways in the turbine building are 18 in. tall.

In the screen house, based on the unrealistically conservative assumption that the two pumps do not trip, the maximum water level that could occur would be 10.8 in. This level is based on the idea that water flowing from the pumps would flow north for a short distance and drop into the circulating water system intake bay. Wave action in the screen house generated by the safe shutdown earthquake would add a height of 16.08 in. to this value for a total of 26.9 in. The dikes in the screen house are 30 in. in height and are situated to prevent water from reaching safety-related equipment.

In analyzing the water buildup in the turbine building, the assumption was made that no water escaped from that area either through open doors or through floor drains. If this water were to escape from the floor but be restricted from draining into the discharge canal, the water level buildup would reach a steady-state height of 4 in. around the screen house. Maximum wave action here because of the safe shutdown earthquake would be only 4 in. for a total of 8 in. In order to prevent this water from draining into the basement of the screen house, 9-in. curbs were installed around the entrances to this area.

10.6.3 INSTRUMENTATION AND CONTROL

The main control board has the circulating water pump switches, circulating water pump discharge pressure and valve position indication, screen house water level indication, traveling screen status lights, and the switches to operate the condenser inlet/outlet valves (on the back of the main control board). In addition, several annunciators would alert the operators to a problem with the circulating water system including high water alarms for the screen house and turbine building condenser pit.

10.6.4 INSERVICE INSPECTION

The inservice inspection program for the condenser and water control structures at Ginna Station is incorporated into the Ginna Station preventive maintenance program. It includes provisions for continuous washing of the traveling screens and periodic maintenance of the screens; periodic monitoring of the intake water for chemical conditions and aquatic life; periodic inspection of the forebay by divers to evaluate pump wear, silt buildup, zebra mussel buildup, and general conditions; periodic checking of the intake structure by divers; and checking of the revetment annually for adverse erosion or other deterioration. Since 1975, condenser inservice inspection has utilized the eddy-current examination method to ensure the integrity of the tubing. From 1975 to 1995, this typically included approximately 100% inspection of one water box with a random sampling of tubes in the other three water boxes

each year. This sample included areas where previous damage or leaks were found in the air removal sections. Since the total retubing of the condenser in 1995, the sampling group is approximately 10%.

This normal maintenance program at Ginna Station serves to ensure that water control structures remain in good condition.

Figure 10.6-1 Sheet 1 - Figure DELETED

Figure Deleted

Figure 10.6-1 Sheet 2 - Figure DELETED

Figure Deleted

Figure 10.6-2 Screen House Area Plot Plan

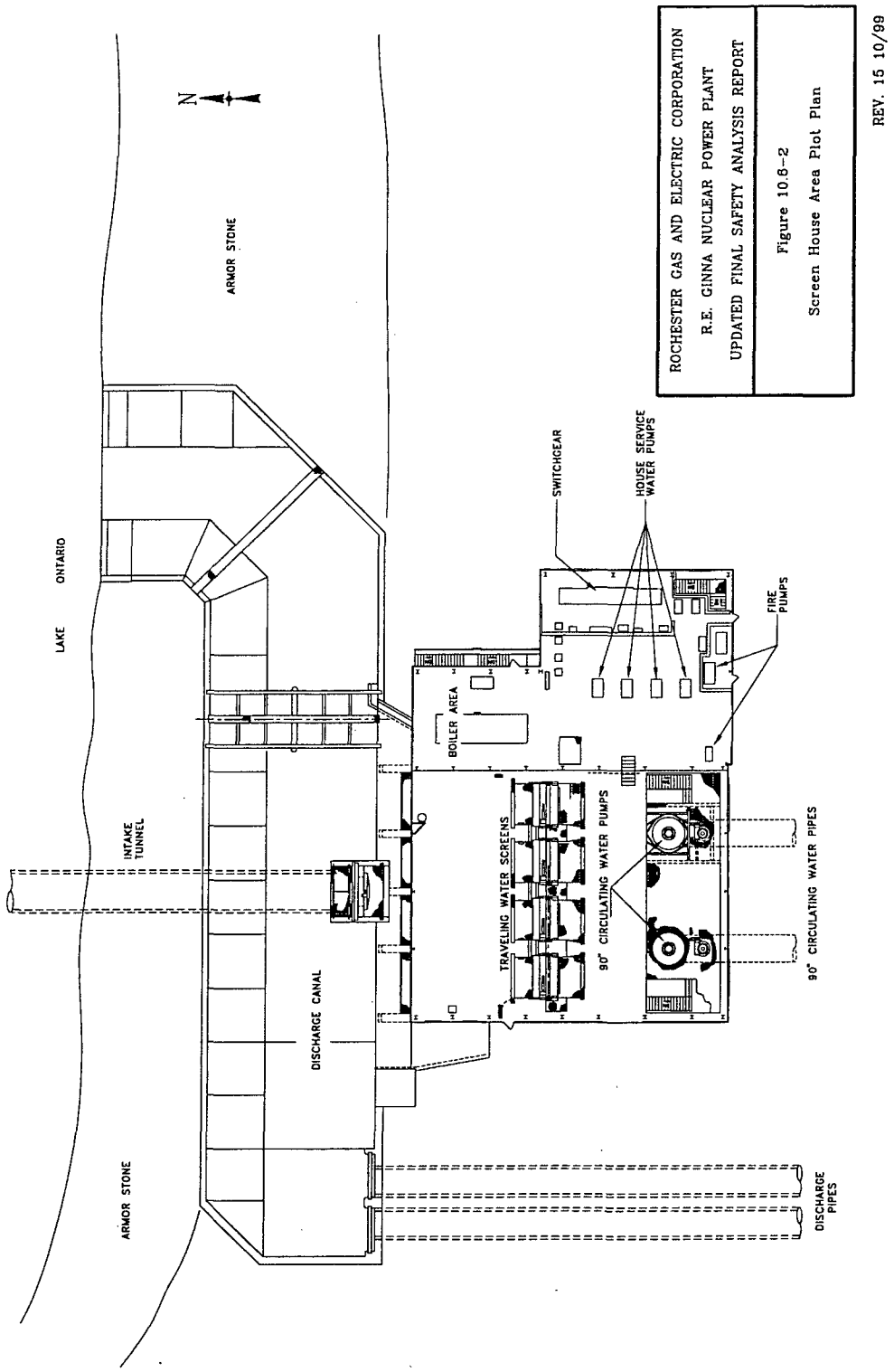

Figure 10.6-3 Circulating Water Intake Cross Section

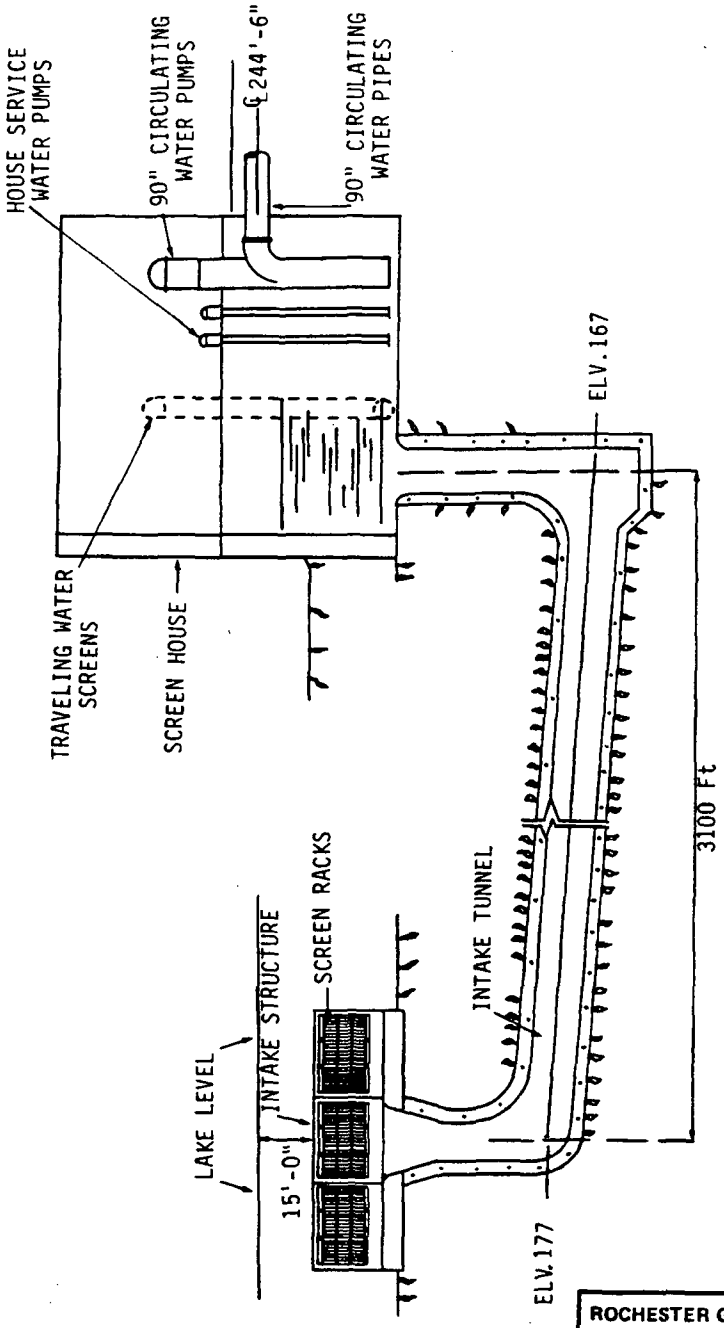

ROCHESTER GAS AND ELECTRIC CORPORATION
R. E. GINNA NUCLEAR POWER PLANT
UPDATED FINAL SAFETY ANALYSIS REPORT

Figure 10.6-3
Circulating Water Intake Cross Section

REV 11 12/94

10.7 OTHER FEATURES OF THE STEAM AND POWER CONVERSION SYSTEM

10.7.1 STEAM DUMP SYSTEM

The purpose of the steam dump system is to minimize the stresses on the nuclear steam supply system induced by disturbances in secondary plant steam loads. It does this by acting as an artificial steam load itself via eight steam dump valves that are capable of passing up to approximately 28% rated steam flow from the common steam header directly to the main condenser. In conjunction with the rod control system, the design of the steam dump system allows the plant to accommodate a 50% load rejection without inducing a reactor trip. In addition to limiting reactor coolant system temperature and pressure transients on reductions in steam loads, the steam dump system also serves to minimize the undesirable possibility of lifting the pressurizer and Main Steam Safety Valves (MSSV) and aids in conducting and controlling reactor coolant system cooldowns and heatups.

Basically, the steam dump system can operate in three modes: Manual, Automatic (Loss of Load), and Automatic (Plant Trip). Each of these modes uses different inputs and programs, and all require certain permissive conditions to exist prior to steam dump actuation being possible.

The flow diagram of the steam dump system is shown in Drawings 33013-1918 and 33013-1232.

The system flow path starts with two 12-in. lines which tap off of the common 36-in. main steam header downstream of the main steam isolation valves. Each of these 12-in. lines has a manual isolation valve with a bypass valve around it. Each line has four steam dumps with manual isolation valves that tap into one of the two condensers. Thus, each condenser can receive this discharge of four steam dump valves via a 12-in. steam line. Drain line taps upstream of the steam dumps drain any condensate in the upstream piping to a steam trap header to prevent erosion and water hammer in the downstream lines.

All eight steam dump valves are identical in construction. They are 5-in., reverse acting, air-operated valves that open on air pressure acting against a spring. Thus, on a loss of air pressure, these valves fail shut. They are modulating valves, as determined by the air pressure signal converter via a valve positioner. On large temperature errors, provision is made for rapid opening of the dump valves by bypassing the positioner with full upstream air pressure (maximum open signal). The valve positioner can stroke a valve fully open in 3 to 20 sec while the trip open mode can stroke a valve open within 5 sec. Each valve is capable of passing 302,500 lbm/hour of steam with a steam inlet pressure of 695 psig.

The eight steam dumps are separated for control purposes into four groups of two valves each. For finer control of operation, the four group operating setpoints are staggered sequentially. Each steam generator also has a 6-in., air-operated, atmospheric steam dump valve located upstream of the main steam isolation valves that is capable of relieving 4.25% of rated steam flow, for 1775 MWt full power conditions, directly to the atmosphere. These valves are discussed in Section 10.3.2.5.

10.7.2 HEATER DRAIN SYSTEM

The heater drain system collects drains from various components and injects the water to the main feedwater pump suction to supplement the condensate system and increase system efficiency. The main components of the system are the heater drain tank and two heater drain pumps (see Drawings 33013-1922 and 33013-1923).

The heater drain tank collects the drainage from the high-pressure heaters (5A, 5B), the low-pressure heaters (4A, 4B), and the drains from the moisture separator reheaters (1A, 1B, 2A, 2B). The heater drain tank is located at the east end of the turbine building. It has a capacity of 3600 gallons. It is designed to contain water at 380°F at a pressure of 175 psig.

The heater drain tank has a level control system that indicates on the main control board. It controls the heater drain pump discharge valve and a condenser dump valve to maintain heater drain tank level.

Cool condensate water from the discharge of the condensate pumps is used to maintain the temperature at the bottom of the heater drain tank 10°F lower than the temperature at the normal operating level. This ensures the net positive suction head requirements of the heater drain pumps during rapid power transients. The temperature difference is controlled automatically by a temperature controller, located on the main control board, and a modulating valve in the condensate line.

The heater drain pumps take a suction from the heater drain tank through individual headers and a manual isolation valve and deliver the water to the condensate system just before it enters the suction header of the main feedwater pumps.

There are two 50%-capacity heater drain pumps. Each heater drain pump is rated at 2400 gpm at a discharge pressure of 244 psig. They are driven by 400-hp motors that receive power from the 4160-V ac buses. The controls for the heater drain pumps on the main control board are identical with the condensate pumps.

A recirculation line is provided for each heater drain pump. These lines merge and return to the heater drain tank via a control valve. This valve is controlled by heater drain pump discharge header pressure. The valve will modulate to maintain a minimum flow of 500 gpm per pump.

10.7.3 EXTRACTION STEAM SYSTEM

To improve the efficiency of the steam cycle, extraction steam is taken from several stages of the main turbine to preheat the feedwater prior to entering the steam generators. This involves routing some of the steam to the feedwater heaters that would normally continue through the turbine (see Drawings 33013-1903 and 33013-1924). Cycle efficiency is improved by adding the latent heat of condensation to the feedwater instead of the circulating water system.

Extraction points from the main turbine are as follows:

A. Between the fifth and sixth stage blade rows for the high-pressure turbine to supply steam to the No. 5 feedwater heaters.

B. Steam from the high-pressure turbine exhaust is supplied to the No. 4 feedwater heaters.

C. Fourth stage extraction from the low-pressure turbines supplies the No. 3 feedwater heaters.

D. Seventh stage extraction from the low-pressure turbine supplies the No. 2 feedwater heaters.

E. Ninth and tenth stage extraction from the low-pressure turbines supplies the No. 1 feedwater heaters.

F. The No. 4 feedwater heaters also receive steam from the preseparators.

G. The No. 5 feedwater heaters also receive heating from the moisture separator reheat steam.

Installed in each of the extraction steam lines from the high-pressure turbine are two counterweighted air-operated nonreturn or check valves. The valves are installed to prevent overspeeding of the turbine due to backflow of steam from the feedwater heaters after a turbine trip, and to protect the turbine from high water level in a feedwater heater in the case of feedwater heater tube leaks.

On a turbine trip the air operators are vented on both valves in each line allowing them to close in the event steam does flow back from the feedwater heaters.

On a high water level on the shell side of either No. 4 or No. 5 feedwater heater, one of the two valves in the steam line supplying the affected feedwater heater will shut. This prevents water from backing up into the turbine casing and causing damage.

10.7.4 CONDENSATE STORAGE SYSTEM

There are three storage tanks in the condensate storage system. Two of the tanks (condensate storage tanks (CST) A and B) are identical and provide water to the suction of the preferred auxiliary feedwater pumps, water for hotwell makeup, and storage capacity for rejected hotwell water. The third tank (all-volatile-treatment condensate storage tank) functions to provide clean water for condensate demineralizer regeneration. The arrangement of the tanks is shown in Drawing 33013-1234.

The two identical tanks are vertical cylindrical tanks located in the service building. Each has a nominalcapacity of 30,000 gallons. Redundant level instrumentation and low level alarms in the control room are provided for the condensate storage tanks (CST). A condensate storage tank (CST) level alarm is generated if the level of either tank reaches either 18 ft 4 in or 22 ft 4 in. The tanks are cross-connected by two headers. One header supplies the preferred auxiliary feedwater pump suctions and is used for steam-generator makeup operations. The other header is used for hotwell rejection or makeup.

The Technical Specifications require that there be a minimum of 24,350 total gallons of water available in these two tanks whenever the reactor is above MODE 4 (Hot Standby), for use by the preferred auxiliary feedwater system. This is the minimum amount of water needed to remove decay heat for 2 hours after a reactor trip from full power. Should more water be needed, additional sources are available. An unlimited supply from Lake Ontario via the ser-

vice water (SW) system. Alternate water supply to directly fill the condensate storage tanks can be provided by alignment of the fire water system (via valve 5158C) or the city water system.

Makeup lines and drain lines are provided to and from the condensate storage tanks (CST) A and B. Water can be drained from the tanks and replaced with demineralized makeup water in order to purify the condensate storage water if necessary.

Condensate storage tanks A and B were designed to the American Water Works Association Standard (AWWA) D100, 1965 edition. The tanks are located in the service building, which is a nonseismic structure. The tanks are significant to safety for pressure boundary integrity to maintain sufficient inventory for the preferred auxiliary feedwater pumps. The tanks are nonseismic. They have the potential for being rendered inoperable by the effects of several postulated hazards including the safe shutdown earthquake, tornadoes, floods, and missiles. These hazards are accommodated by the availability of the service water (SW) system as a Seismic Category I source of water to the preferred auxiliary feedwater pumps.

The all-volatile-treatment condensate storage tank is located outside of the all-volatile-treatment building and has a capacity of 100,000 gallons. This is adequate for two regenerations. The water is kept from freezing by a heating system.

A condensate transfer pump is used to supply makeup to the all-volatile-treatment condensate storage tank from the condensate storage tanks (CST) A and B. It is also used to pump down the hotwells to any of the condensate storage tanks (CST) for maintenance.

Demineralized water can be transferred from the all-volatile-treatment condensate storage tank to condensate storage tanks (CST) A and B using the A or B regeneration sluice pumps. The sluice pumps are normally used to take water from the all-volatile-treatment condensate storage tank for condensate demineralizer regeneration. However, the pumps can be aligned to discharge to condensate storage tanks (CST) A and B.

10.7.5 STEAM-GENERATOR BLOWDOWN AND BLOWDOWN RECOVERY SYSTEM

10.7.5.1 Steam-Generator Blowdown System

Continuous blowdown is used to reduce the quantities of solids that accumulate in the steam generators as a result of the boiling process. The all-volatile-treatment for the secondary water uses steam-generator blowdown to optimize water chemistry conditions. The quantity of blowdown fluid ranges from 40-100 gpm per steam generator as needed to maintain secondary side water chemistry within plant water chemistry requirements.

The blowdown system is designed to surge from the continuous flow rate to a periodic surge blowdown rate of 150 gpm for each steam generator for a period of three to five minutes nominally at a frequency of once a week. However, the blowdown flow rate is procedurally limited to 125 gpm. The exact surge flow rates, time period, and frequency are determined as a function of steam generator corrosion product removal and plant operating condition.

The steam-generator blowdown system is shown in Drawing 33013-1277, Sheets 1 and 2.

Each steam generator has a blowdown header drilled integral to the tubesheet. Both steam generator A and steam generator B are equipped with independent blowdown piping from the connecting steam generator nozzles to a common header located in the Turbine Building just upstream of the blowdown flash tank.

The piping transports the removed fluid and entrapped debris away from the steam generator, through containment penetrations, to a common flash tank in the turbine building basement.

To reduce the erosion-corrosion potential and permit periods of increased blowdown flow rates, the blowdown pipe size was increased from 2 in. to 3 in. throughout each blowdown system outside of containment. The common 2 in. piping inside containment associated with steam generator A was also replaced with 3 in. piping. The only remaining 2 in. piping is located in the steam generator B blowdown system from the steam generator nozzles to a point just downstream of the containment penetration.

Each blowdown line and each blowdown sample line are provided with a containment isolation valve just outside containment. These pneumatic isolation valves will automatically shut on a containment isolation signal or on receipt of a signal from a blowdown radiation detector. Two flow control valves (V-5725A and V-5725B), just upstream of the blowdown flash tank inlet, are used to set the individual blowdown rates. Two isolation valves (V-5709 and V-5710) located upstream of the flow control valves will close on high blowdown flash tank level or turbine trip. A cross-tie line is located upstream of the isolation valves to allow blowing down both steam generators through one line while the flow control valve in the other line is being maintained.

The blowdown flash tank also receives blowdown sample water via the nuclear sample room.

10.7.5.2 Blowdown Recovery System

The blowdown recovery system is designed to recover both the blowdown water and heat.

Flashed steam is vented from the blowdown flash tank to low-pressure feedwater heater 3A for heat recovery. The vented steam condenses in the feedwater heater and returns to the condenser through the feedwater heater drain system. The remaining condensate in the blowdown flash tank is drained directly to condenser 1B through a level control valve. All blowdown flow can thus be recovered and returned to the condensate system through the condensate demineralizers.

The Condensate demineralizers can also be bypassed, which requires the blowdown flash tank condensate to be overboarded via the condenser waterboxes to the circulating water discharge canal tunnels. This is done using the same level control valve as used to recover the condensate to the 1B Condenser.

10.7.5.3 Blowdown System Operation

The blowdown system startup, shutdown, and blowdown flow rate modulation are manual operations. The level in the flash tank is automatically controlled.

During initial startup startup the steam generator blowdown is normally aligned to the flash tank, and the flash tank is drained to the discharge canal tunnel, and vented to the atmosphere. Once the turbine load is approximately 25%, the flash tank drain is realigned to the water-boxes, and the steam is recovered by the low-pressure feedwater heater 3A. Normal blow-down flow ranges from 40-100 gpm per steam generator as needed to maintain secondary side water chemistry within plant water chemistry requirements. The blowdown flow rate is procedurally limited to 125 gpm.

10.7.6 MAIN TURBINE AND GENERATOR AUXILIARY SYSTEMS

The main turbine is supported by a number of auxiliary systems that improve the efficiency and safety of its operation.

First and second stage air ejectors remove air and noncondensible gases from the condenser and maintain it under a vacuum, improving the efficiency of the main turbine by reducing the backpressure seen by the turbine exhaust.

The gland sealing and exhaust system applies steam to a labyrinth seal around the rotor shaft to preclude air inleakage into the turbine casings and condenser and to prevent steam leakage into the turbine building.

The vacuum priming system uses mechanical vacuum pumps to prevent air buildup in the condenser water boxes or tubes-a condition that would reduce condenser efficiency.

The exhaust hood spray system prevents overheating of the last stage low-pressure blading under low steam flow conditions.

The turbine lube-oil system provides lubrication and cooling of the turbine bearings and sup-plies oil to the auto-stop header for turbine protection. It also provides backup oil to the seal-oil system to prevent hydrogen leakage into the turbine building. A purification system is an adjunct to the turbine lube-oil system to remove water and contaminants from the lube-oil, as well as to provide storage space for makeup oil.

The generator auxiliary systems are required to ensure that the main generator will operate at its maximum rated output safely and efficiently. This is accomplished by cooling the genera-tor rotor, stator, exciter, main output bushings, and the isophase bus ducts.

Pressurized hydrogen is circulated by the internal ventilation of the generator to remove heat produced in the rotor and stator. The hydrogen then transfers this heat to hydrogen coolers which are supplied with cooling water from the condensate system.

To prevent the escape of hydrogen along the generator shaft and out of the casing, a seal-oil system is utilized. The air-side seal-oil pump and the hydrogen-side seal-oil pump provide oil for sealing at approximately 12 psig higher than generator hydrogen pressure. The main tur-bine oil system can provide a backup source of pressurized seal oil.

10.7.6.1 Gland Sealing Steam and Exhaust System

The gland sealing steam system shown in Drawing 33013-1904 prevents air leakage into the turbine casing that could increase turbine windage losses and reduce condenser vacuum. It also prevents steam leakage from the turbine casing into the turbine building.

The rotor glands are a labyrinth type consisting of a number of seal strips to minimize steam leakage. The leakage steam is removed from a chamber through a connection in the lower half of the gland case to the gland seal condenser. The condenser maintains a partial vacuum in the chamber which prevents steam leakage past the chamber to the turbine room. The labyrinth seals are steam throttling devices consisting of alternating rows of stationary and rotating rings arranged around the shaft with a small radial clearance. They provide a high resistance to steam or air flow along the shaft.

Sealing steam is admitted to the chamber through a connection in the gland case. A pressure of about 3 psig is automatically maintained on the chamber under all operating conditions by the gland steam controller. The gland steam controller is an air-operated diaphragm control valve and during starting of the turbine supplies steam to the gland header. As load is increased, the steam pressure inside the high-pressure turbine increases and the steam leakage path is outward toward the rotor ends, reducing or eliminating the need to supply sealing steam to the glands. When this occurs, leakage from the high-pressure turbine glands and steam from the regulator valve will supply steam sealing requirements for the low-pressure glands. A safety valve and safety head protect against excessive pressure in the gland sealing system. Due to increased HP Turbine exhaust pressure from the plant uprate to 1775 MWt, a manual spillover system was installed. This system allows operators to manually by-pass gland steam header steam flow to the condenser if high gland steam header pressures are observed.

The gland steam condenser maintains a pressure slightly below that of atmosphere (5 in. to 10 in. of mercury vacuum) in the gland leakoff system to prevent the escape of steam from the ends of the glands and to remove and condense the vapor. It eliminates dripping and accumulation of moisture caused by slight gland leakage to the atmosphere. The gland seal steam is admitted into the condenser section via the steam inlet and then passes among the tubes. The air and other noncondensible vapors are discharged to an atmospheric vent by an air exhauster. The condensate formed in the gland steam condenser shell is removed via the drain. Cooling of the condenser is provided by the condensate system.

Supplementing the gland sealing steam system, two diaphragm-operated valves, each under control of a differential pressure controller, introduce throttled steam into the inner glands at both the governor and generator ends of the high-pressure turbine at a pressure of 5 psig higher than that existing in the high-pressure exhaust. This will create a flow of steam into the turbine and also into the 3 psig zone. Since this is throttled steam, the temperature at maximum load will be approximately 500°F. When this is throttled down to 3 psig in the gland area, the resulting temperature will be approximately 310°F with 90°F superheat. As a result, the temperature gradient will be reduced between the gland area of the cylinder and the cylinder end wall.

10.7.6.2 Air Ejectors

There are four first-stage and two second-stage air ejector nozzles provided to remove air and noncondensibles from the two single pass condensers. There are also two priming ejectors (hoggers) supplied in the system.

Main steam is supplied to a reducing station where the steam pressure is reduced to approximately 145 psig. The first-stage air ejector is lined up to take a suction on the main condenser and discharge to the air ejector inner condenser. The second-stage ejector takes a suction on the inner condenser and discharges to the after condenser. Any air and noncondensibles are then directed out the ventilation stack. The inner and after condensers are cooled by condensate flow. The condensed steam collected by the air ejectors is returned to the main condensers.

The condenser air removal arrangement is shown in Drawing 33013-1921.

10.7.6.3 Vacuum Priming System

The vacuum priming system, shown in Drawing 33013-1921, removes air and noncondensible gases from the condenser water boxes. By ensuring air-free water boxes, condenser cooling becomes more efficient.

The vacuum priming system utilizes two vacuum pumps and a vacuum priming tank to accomplish water box degasification. The vacuum priming tank is maintained at 25 in. mercury vacuum by the vacuum pumps and the condenser water boxes are connected to the priming tank through float valves. The condensate cooler is also connected to the vacuum priming tank through a float valve.

Under MODES 1 and 2, one vacuum priming pump is running and the other is in auto-standby. The standby pump will start if the vacuum priming tank decreases to 12 in. mercury vacuum to aid in restoring vacuum.

To start the vacuum priming pump, service water (SW) must be available to seal the priming pump. A pressure switch on the seal-water line will close at 10 psig, allowing the vacuum priming pump to start. An interlock is also provided which requires that a circulating water pump be running before starting the vacuum priming pump. The status of the vacuum priming pumps is indicated at the main control board.

10.7.6.4 Exhaust Hood Spray System

During low load operation there is insufficient steam flow to provide cooling for the turbine blades. Wind friction (windage) will cause the long blades to overheat. The result is that the exhaust load temperature reaches an exceptionally high level. This high temperature affects the mechanical characteristics of the turbine last-stage brackets, inner casings, and exhaust hoods. To control this temperature, a water spray system with nozzles installed downstream of the eleventh-stage buckets is provided.

The water supply to the spray system is taken from the condensate system downstream of the condensate polishers. Although provisions exist for automatic operation of the system con-

trolled by exhaust hood temperatures, the system is normally operated on a manual bypass. The spray nozzles direct the water away from the blades, cooling by absorbing radiant heat. Temperatures in the exhaust hood are normally maintained below 160°F.

10.7.6.5 Turbine Lube-Oil System

The turbine lube-oil system shown in Drawing 33013-1901, has three main functions:

A. Provide lubrication and cooling for the turbine bearings.

B. Supply lube oil to the turbine trip devices.

C. Provide cooling, purification, and storage facilities for the oil.

The main oil pump, located on the front end of the high-pressure turbine, is driven from the turbine rotor shaft and supplies oil at 320 to 380 psig with 10 to 45 psig suction pressure. This pump is not self-priming and must have pressure applied to the suction. At turbine operating speed, the suction is supplied by a suction ejector which uses high-pressure oil from the main oil pump impeller as the operating medium. During startup, the suction is supplied by the turning gear oil pump.

The main oil pump supplies lubrication to all nine journal bearings and the thrust bearing, provides normal makeup to the seal-oil system, and supplies oil to the auto-stop oil header and turbine trip devices. The main oil pump is backed up by the turning gear oil pump which starts on a turbine trip or a low lube-oil bearing pressure of 8 psig. As a backup to the seal-oil system, a high-pressure seal-oil backup pump which takes suction from the turbine oil reservoir is provided. It also starts on a turbine trip or a low bearing oil pressure of 8 psig. As an emergency backup, a dc emergency oil pump is provided should the turning gear oil pump fail. This pump will start on a low lube-oil pressure of 6 psig.

Oil is supplied to the bearings through one of two oil coolers. The oil is cooled to 110-120°F by service water (SW) which is automatically throttled on the outlet of the cooler. The oil coolers may be shifted at any time by opening the service water (SW) to the idle cooler, then filling and venting the oil cooler. The selector valve is then shifted. The oil supplied to the bearings passes to and from them through double-walled pipe. Return to the turbine oil reservoir is by gravity drain.

High-pressure oil from the main oil header is directed to the auto-stop oil header, to the overspeed trip valve, and to the thrust bearing trip. The turbine will be tripped when the auto-stop oil header is depressurized by dumping the oil back to the reservoir. Trip devices for the turbine include:

- Overspeed (108%).
- Low vacuum (20 in. of mercury).
- Low oil pressure (6 psig).
- Thrust bearing failure (75 to 80 psig).
- Electrohydraulic fluid trip.
- Manual.

Provisions are made for cleaning and conditioning the oil. The purifying component is the turbine oil conditioner unit, referred to as the "Bowser" type. It removes free water and solid particles from the oil, then polishes it and strips all moisture and cloud vapor from it. The oil conditioner consists of a three-section segmented tank, a fiberglass filter, and associated pumps.

10.7.6.6 Generator Hydrogen Cooling System

Hydrogen gas cooling is provided for the turbine generator based on the "inner-cooling" principle.

The functions of the hydrogen gas system are to:

A. Provide a means for safely putting hydrogen in or taking hydrogen out of the generator, using carbon dioxide as a scavenging medium.

B. Maintain the gas pressure in the generator at the desired value.

C. Indicate to the operator at all times the condition of the generator with regard to gas pressure, temperature, and purity. The presence of liquid in the generator is also indicated by an alarm on the hydrogen supervisory panel.

D. Dry the gas and remove any water vapor, which might get into the generator from the seal oil.

The hydrogen gas supply provides the necessary valves, pressure gauges, regulators, and other equipment to permit introducing hydrogen into the generator. It also provides a means of controlling the gas pressure within the generator housing either manually by means of valves or by means of pressure regulators which are manually adjustable to give the desired gas pressure.

The carbon dioxide supply provides a means of admitting carbon dioxide to the generator during the gas purging operation.

The gas, either hydrogen or carbon dioxide, is distributed uniformly to the various compartments of the generator by means of perforated pipe manifolds located in the top and bottom of the generator housing.

A gas dryer consisting of a chamber filled with activated alumina absorbent material is connected across the generator blower, so that gas is circulated through the dryer whenever the machine is running.

The purity of the gas in the generator is determined by use of the hydrogen purity indicating transmitter and the purity meter blower. Gas purity can be read on the hydrogen panel or on a remote indicator on the control board.

A thermostat is located in the generator to provide an alarm in case the temperature of the hydrogen in the generator becomes excessive.

The hydrogen is cooled by passing it through coolers where the gas gives up its heat to the condensate.

Float-operated switches are provided under the generator frame and under the main lead box to indicate the presence of any liquid in the generator which might be due to leakage or condensation from the cooler.

Temperature detectors are provided in the generator and gas passages to measure the various internal temperatures in the gas passages.

All generators are equipped with a hydrogen pressure control, which has a supply pressure switch and two pressure gauges. A pressure switch is located on the supply side of the hydrogen pressure control manifold and gives an alarm when the supply pressure is low.

10.7.6.7 Generator Seal-Oil System

The function of the seal-oil system is to lubricate the seals and prevent hydrogen escaping from the generator. The same oil is used in the turbine bearing system and the gland seal-oil system.

Contaminating air and moisture are kept out of the generator by separating the air side of the seal-oil system from the hydrogen side of the seal-oil system. When this is done, the hydrogen-side oil is returned to the hydrogen side of the seal ring in the generator, thus preventing the escape of absorbed hydrogen to the outside atmosphere. The air-side seal oil is returned to the air side of the seal ring, thus preventing the release of absorbed air or moisture into the hydrogen-side compartment of the generator.

10.7.6.8 Generator Exciter Cooling

The exciter is totally enclosed within the exciter housing. An attached fan on the exciter shaft circulates the air within the exciter enclosure. The air circulates through the exciter and then passes through a heat exchanger cooled by service water (SW).

10.7.7 SECONDARY CHEMISTRY CONTROL

10.7.7.1 Introduction

10.7.7.1.1 Background

Chemistry control reduces the corrosion of equipment in the secondary system and minimizes the fouling of heat transfer surfaces.

Westinghouse adopted all-volatile-treatment chemistry for use in steam generators in August 1974 when inservice inspection of steam generators operating with phosphate chemistry revealed excessive corrosion of the heat transfer tubes. Ginna Station shifted to all-volatile-treatment chemistry control during a shutdown for this purpose in November 1974.

10.7.7.1.2 All-Volatile-Treatment Chemistry Control

The basis for all-volatile-treatment chemistry control is that only volatile chemicals are added to the system as chemical control agents.

In all-volatile-treatment chemistry control, system pH is controlled by the addition of ammonium hydroxide and ethanolamine (ETA), while hydrazine is added to the system to scavenge

oxygen. Drawing 33013-1909 shows the chemical control system used to maintain all-volatile-treatment chemistry control. The all-volatile-treatment chemistry method also minimizes the solids content of the steam generator water, thus reducing the presence of those elements which cause corrosion or induce scale and sludge formation. This is accomplished by ensuring high-quality makeup water, a continuous steam generator blowdown, and operation of an on-line condensate demineralizer system (if needed). Typically, at full power, it is not necessary to operate the demineralizers to maintain the desired plant chemistry.

The all-volatile-treatment chemistry system accomplishes the following:

A. Minimizes corrosion in the steam generator and the condensate and feedwater systems.

B. Minimizes the deposit of sludge in the steam generators.

C. Minimizes scale deposits on the steam generator heat transfer surfaces.

D. Avoids turbine deposits due to carryover from the steam generator.

In conjunction with the all-volatile-treatment system, the Mobile Demineralizer trucks reduce oxygen concentrations, the condensate polishing demineralizer system removes soluble and insoluble impurities from the condensate stream, and the steam generator blowdown system continuously removes solids from the steam generators.

The oxygen content of the feedwater is of particular concern since it has a strong influence on system corrosion. Some of the oxygen entering the system is contained in makeup water from the condensate storage tanks (CST). Diaphragms on condensate storage tanks (CST) minimize the oxygen increase but do not eliminate it. Air leaks into the subatmospheric portions of the turbine cycle also contribute to the feedwater oxygen concentration. Hydrazine is added to the system to react with and scavenge the oxygen before it enters the steam generator.

Hydrazine is pumped into the system at the suction of the condensate booster pumps during MODES 1 and 2. During shutdown and startup operations, it is added at the turbine-driven auxiliary feed pump. Hydrazine reacts with dissolved oxygen to remove it from the system as follows:

$$N_2 H_4 + O_2 \rightarrow N_2 + 2H_2O$$

To ensure the removal of all oxygen from the feedwater, hydrazine is maintained at a concentration well above the oxygen concentration.

The addition of hydrazine also tends to raise the pH of the system:

$$2\ N_2H_4 \rightarrow 2\ NH_3 + H_2 + N_2$$

This reaction is encouraged by heat, so that nearly all of the hydrazine has reacted by the time it reaches the steam generator. The NH_3 is so highly soluble that it is not removed by the air ejectors and tends to raise the entire secondary system pH.

The steam generator pH is established and maintained, when necessary, by ammonium hydroxide and ethanolamine (ETA) additions to the feedwater stream.

In addition to pH and hydrazine level, several other parameters are monitored to give indication of the results of the chemical additions. The secondary all-volatile-treatment chemistry specifications for normal power operations are based on the current revision of the industry standard, EPRI TR-102134, "PWR Secondary Water Chemistry Guidelines".

Steam generator secondary side wet layup, with chemically treated water, is used below MODE 4 (200°F) and minimizes corrosion and oxidation. Each steam generator has a wet layup recirculation system that mixes steam generator bulk water, preventing chemical stratification and providing representative chemistry samples.

Secondary Water Chemistry Program requirements are included in the Technical Specifications.

10.7.7.1.3 Nonnuclear Sampling System

To ensure that the established chemistry parameters are maintained, a non-nuclear sampling system is provided (see Section 9.3.2.2). This system allows for both continuous and periodic sampling of a variety of points throughout the secondary side to provide analysis necessary for plant operation, corrosion control, and the monitoring of equipment and plant performance. The system includes a computerized system for on-line monitoring of secondary water chemistry. The system accepts continuous inputs from individual sensors and in-line chemistry analyzers in the secondary water system and provides data to the chemistry laboratory for use in controlling secondary water chemistry. The inputs are shown in Table 10.7-1.

10.7.7.2 Water Chemistry Monitoring Program

Ginna Station has an established water chemistry monitoring program directed at maintaining chemistry control in the secondary circuit. That program continues to be reviewed and revised based on plant and industry experience. This program, in conjunction with the general philosophy of operation, limits corrosion damage and helps ensure the long-term integrity of the steam generators. Secondary chemistry limitations are established for all plant modes. A chemistry monitoring procedure includes sections that identify (1) critical steam generator blowdown parameters, (2) action level objectives, (3) limiting control specifications that become progressively more stringent and can result in plant shutdown, (4) schedular requirements for sampling and analysis, (5) data recording requirements, and (6) the sequence of reporting out-of-normal chemistry conditions to specific individuals. The procedure incorporates the steam generator blowdown Action Levels and limitations identified in EPRI TR-102134, "PWR Secondary Water Chemistry Guidelines." One of the Level 1 objectives is to identify and correct the cause for a parameter value that is "out-of-the-historical-normal". Action Level 1 steam generator blowdown limitations include values specified in EPRI TR-102134 for cation conductivity, sodium, chloride, and sulfate.

10.7.7.3 Catalytic Oxygen Removal System

The catalytic Oxygen removal system was used in conjunction with the IONICS water treatment system. The IONICS water treatment system was replaced by the GE water treatment system and the catalytic Oxygen removal system was isolated per PCR 2004-0081. The remaining description is retained for historical purposes only.

The catalytic oxygen removal system reduceddissolved oxygen by mixing hydrogen with the condensate and reducing the free oxygen to water by exposure of the mixture to a metal catalyst surface. The system was designed to reduce oxygen concentration in the condensate storage system to less than 100 ppb. The catalytic oxygen removal system **was** controlled automatically by a central processing unit and **operated** on demand. **Hydrogen was** supplied from dedicated hydrogen cylinders in the hydrogen supply shed. The catalytic oxygen removal system **interfaced** with the condensate system and with the primary water makeup system through the primary water treatment system. The catalytic oxygen removal system **took** suction from the condensate storage tank and/or the primary water treatment system and **discharged** to the condensate storage tank and/or the primary water treatment system. A hydrogen leak **would have resulted in a** shut down the catalytic oxygen removal system.

10.7.7.4 Condensate Polishing Demineralizer System

10.7.7.4.1 System Description

Condenser inleakage provides the major source of dissolved solids in the condensate. Other solids are introduced with the makeup water or are contributed from steam lines, turbine, or condenser as corrosion products. Moisture carryover also introduces a low level of solids into the condensate.

The condensate polishing demineralizer system provides for the removal of soluble and insoluble impurities in the condensate. It consists of four inline mixed-bed demineralizers that take full flow from the condensate pumps, remove the impurities, and discharge the purified condensate to the condensate booster pumps (see Drawing 33013-1911, Sheets 1 and 2).

The condensate polishing demineralizer units are separate vessels that remove the impurities in the condensate through regenerable ion exchange resins. The resins are regenerated in separate vessels. The resin regenerants are stored in concentrated form and diluted for regeneration service.

Each vessel is provided with a resin trap to prevent gross transport of resin to the steam generators in case of demineralizer underdrain failure. Differential pressure across each resin trap is indicated and alarmed.

The four demineralizers are in parallel with each other and a bypass allows for the use of any number, depending upon plant conditions. The original design basis for the demineralizer system assumed that one bed is lined up for startup, a second bed is placed in service at about 35% power, a third at 70%, and the fourth bed is normally left on standby. The fourth bed allows rotation of the beds, with one at a time being taken off the line for regeneration by the regeneration facilities. Indications that a bed is due for regeneration are:

- High effluent sodium.
- High conductivity in the demineralizer effluent.
- Low flow (high-pressure drop).
- Preset number of gallons put through the bed (not normally used).

Based upon existing secondary side chemistry, the demineralizers are not required to operate continuously when the plant is operating at full power.

The demineralizers, resin regeneration tanks, and tanks for the regenerate wastes are located in a separate, shielded building (all-volatile-treatment building). The building has a 2-ft-thick concrete wall and roof to minimize operator exposure in case of radioactivity buildup when a steam-generator tube leak occurs. The system is operated from a control panel in one end of the building.

The all-volatile-treatment building is located adjacent to the all-volatile-treatment condensate storage tank, which contains sufficient water for two regeneration cycles. The 100,000-gallon tank has a **layer of polyethylene balls floating on the surface of the water to limit oxygen interaction with the condensate.** It is maintained above 35°F by a 15-kW, 100-gallon heater which cycles on at 35°F and off at 39°F.

10.7.7.4.2 Resin Transfer

Upon the exhaustion of a demineralizer, which is signaled by high-pressure drop (low flow), totalizer count alarm, high conductivity alarm, or high sodium effluent alarm, the operator initiates resin transfer operations.

The resin in the exhausted demineralizer is hydraulically transferred to the resin separation/ cation regeneration tank. The regenerated, ammoniated, mixed, and rinsed resins in the resin mix rinse tank are then transferred to the empty demineralizer and the demineralizer is placed in standby. New resin is introduced into the system through the separately located resin addition hopper in the turbine building. Bags or drums of resins are manually dumped into the hopper and hydraulically educted from the hopper to the resin separation/cation regeneration tank.

The water for resin transfer, regenerant dilution, and resin rinsing is supplied from the 100,000-gallon condensate storage tank.

10.7.7.4.3 Regeneration (Drawing 33013-1910, Sheets 1 and 2)

Plant procedures control the Condensate Polishing System resin regenerations as follows:

- Transfer exhausted resin from service vessel to resin separation/cation regeneration vessel.
- Clean resins in resin separation/cation regeneration vessel by Air Bump and Rinse Operations (ABROs).
- Backwash resins in resin separation/cation regeneration vessel to separate cation and anion resins.
- Transfer anion resins from resin separation/cation regeneration vessel to anion regeneration vessel.
- Regenerate anion resins with caustic and then rinse.
- Regenerate cation resins mixed with anion resins by ammonium hydroxide rinse followed by ammonium hydroxide recycle treatment and then rinse.
- Regenerate cation resins with acid and then rinse.

- Transfer anion resins to resin separation/cation regeneration vessel.
- Mix regeneration cation and anion resins.
- Transfer mixed resin to mixed resin storage vessel.

Cation resin removal of secondary water treatment amines determines bed exhaustion. Anion resins use little capacity during service. Anion resin regeneration caustic and ammonium hydroxide steps are eliminated in an alternative regeneration procedure that reduces sodium ingress to secondary systems.

Installed chemical reclaim equipment is not used since using reclaimed chemicals in regenerations would not result in regeneration quality meeting current secondary chemistry impurity limits.

10.7.7.4.4 Waste Disposal (Drawing 33013-1912)

The high conductivity regeneration wastes are collected in the neutralization tank. The wastes are adjusted to a neutral pH at the completion of a regeneration cycle. The neutralized wastes are discharged to the plant circulating water discharge under normal operating conditions. Should unacceptable amounts of radioactivity be detected in the neutralization tank, the contents are discharged to radwaste disposal. A blanked connection is provided outside the east wall of the all-volatile-treatment building for connecting to portable, shielded waste treatment equipment. This provides a second alternative for disposing of regeneration wastes not suitable for discharge to the lake.

The low conductivity regeneration wastes are collected in the low conductivity waste tank. The contents of this tank are used to supplement the regeneration water supply to the condensate polishing demineralizer system. Should unacceptable amounts of radioactivity be detected in the low conductivity waste tank the contents would be drained into the building sump via the trench. This waste is then transferred to the 25,000-gallon holding tank and monitored for radiation before discharge.

10.7.8 EROSION/CORROSION MONITORING PROGRAM

Ginna Station has developed an erosion/corrosion program for single and two-phase systems consistent with the requirements of NUREG 1344 and the NUMARC erosion/corrosion report, dated June 11, 1987. The program is designed to ensure that erosion/corrosion does not result in unacceptable degradation of the structural integrity of high energy carbon steel piping systems. The program is documented in the Ginna Station Erosion/Corrosion Program Manual and includes the following:

- Frequency of Inspection Criteria.
- Acceptance Criteria.
- Inspection/Expansion Criteria.
- Repair/Replacement Criteria.
- Corrective Action.

The main steam, condensate, feedwater, steam generator blowdown, extraction steam, turbine gland steam, gland sealing water, and moisture separator reheater system piping systems are included in the program.

Table 10.7-1
COMPUTERIZED SECONDARY WATER CHEMISTRY MONITORING SYSTEM

Source	Inputs
1.	1B hotwell sodium
2.	1A hotwell sodium
3.	1A steam generator sodium
4.	1B steam generator sodium
5.	Condensate dissolved oxygen
6.	Feedwater dissolved oxygen
7.	1A steam generator pH
8.	1B steam generator pH
9.	Condensate pH
10.	Feedwater pH
11.	Feedwater hydrazine
12.	Spare
13.	Feedwater conductivity
14.	A steam generator conductivity
15.	B steam generator conductivity
16.	Condensate cation conductivity
17.	Feedwater cation conductivity
18.	A hotwell cation conductivity
19.	B hotwell cation conductivity
20.	Heater drain tank cation conductivity
21.	A steam generator cation conductivity
22.	B steam generator cation conductivity
23.	A main steam cation conductivity
24.	B main steam cation conductivity
25.	A steam generator blowdown rate
26.	B steam generator blowdown rate
27.	Sample cooling water temperature