R. E. GINNA NUCLEAR POWER PLANT

Unit 1

FOURTH INTERVAL INSERVICE INSPECTION (ISI) PROGRAM

Effective Date: January 15, 2008

Name and Address of Owner

Constellation Generation Group, LLC
1997 Annapolis Exchange Parkway
Suite 500
Annapolis, Maryland 21401

Name and Address of Generation Plant

R. E. Ginna Nuclear Power Plant
1503 Lake Road
Ontario, New York 14519

Prepared by: Frank A Ulgeski **Date:** 1/4/08

Reviewed by: Jay C Wells **Date:** 1/6/08

Approved by: Glenn R Perkins **Date:** 1/8/08

Record Category: 15.22.12

Section 1 Fourth Interval Inservice Inspection (ISI) Program Rev. 5

1.0 Introduction
1.1 General
1.2 Applicable Documents
1.3 Inspection Intervals
1.4 Classification of Components
1.5 Responsibility for Class 1.2, and 3 ISI Piping and Components
1.6 Records for Class 1, 2, and 3 ISI Piping and Components
1.7 Examination Methods and Requirements
1.8 Repair and Replacement Requirements for Class 1, 2, and 3 Items
1.9 Inservice Inspection (ISI) for System Pressure Testing

2.0 Class 1 Program Plan
2.1 Basis for Preparation
2.2 Components Subject to Examination
2.3 Extent and Frequency of Examinations
2.4 ISI Exemption Criteria
2.5 Additional Programs
2.6 Inservice Inspection Program Plan (Supplement 1)

3.0 Class 2 Program Plan
3.1 Basis for Preparation
3.2 Components Subject to Examination
3.3 Extent and Frequency of Examinations
3.4 ISI Exemption Criteria
3.5 Inservice Inspection Program Plan (Supplement 1)

4.0 Class 3 Program
4.1 Basis for Preparation
4.2 Components Subject to Examination
4.3 Extent and Frequency of Examinations
4.4 Exemption Criteria
4.5 Inservice Inspection Program Plan (Supplement 1)

5.0 Class 1, 2, and 3 Component Supports
5.1 Basis for Preparation
5.2 Component Supports Subject to Examination
5.3 Extent and Frequency of Examination
5.4 Exemptions
5.5 Inservice Inspection Program Plan (Supplement 1)

6.0 Records and Reports

7.0 Miscellaneous
7.1 Alloy 600 and Alloy 690 Material Identification

8.0 Basis

Section 2 Fourth Interval ISI Relief Requests Rev. 5

1.0 Introduction
1.1 General

Section 3 P&ID Boundary Drawings Rev. 1

1.0 General
P&ID Drawings

Section 4 Code Tables Rev. 3

1.0 General
Table 1 – Class 1
Table 2 – Class 2
Table 3 – Class 3
Table 4 – Class 1, 2 and 3 IWF Component Supports
Table 5 – Class MC
Table 6 - Class CC

Section 5 Line List Rev. 1

1.0 General
Table 1 - Line List

Section 6 Allocation Tables Rev. 5

1.0 General
ASME Code Required
- Class 1
- Class 2
- Class 3
- Class 1, 2, 3 and MC Supports
- Class MC
- Class MC Augmented (Rulemaking Required)
- Class CC
- Class CC Augmented (Rulemaking Required)
- Augmented Required Programs
  - RCP Flywheel Prggram
  - High Energy Program
  - Snubber Program

Section 7 Ultrasonic Calibration Block Listing Rev. 2

1.0 General
Ultrasonic Calibration Blocks

Section 8 High Energy Program Rev. 5

1.0 General
2.0 Examination Requirements
3.0 Examination Methods
4.0 Frequency of Examination
5.0 Examination Performance
6.0 Examination Acceptance
7.0 Repair & Replacement Testing Requirements
8.0 Scheduling
9.0 Reports and Records

Table 1 – High Energy Welds and Component Support Information

Section 9 Snubber Program Rev. 3

1.0 General

Section 10 Seismic Support Program Rev. 1

1.0 General
2.0 Examination Requirements
3.0 Examination Methods
4.0 Frequency of Examination
5.0 Examination Evaluation
6.0 Repair & Replacement Requirements
7.0 Scheduling
7.0 Reports and Records

Table 1 - Seismic Category I Supports

Section 11 Additional Programs Rev. 3

1.0 General

2.0 Steam Generator Tube Inspection Program
2.1 General
2.2 Inspection Program
2.3 Examination Method
2.4 Frequency of Examinations
2.5 Examination Evaluation
2.6 Repair, Replacement and Testing Requirements
2.7 Scheduling
2.8 Reports and Records

3.0 Reactor Coolant Pump Flywheel Program
3.1 General
3.2 Examination Requirements
3.3 Examination Method
3.4 Frequency of Examinations
3.5 Examination Evaluation
3.6 Repair & Replacement Requirements
3.7 Scheduling
3.8 Reports and Records

Section 12 ASME Class 1, 2 and 3 Repair and Replacement Program Rev. 3

1.0 Purpose:
2.0 References:
3.0 Definitions:
4.0 Code Applicability:
5.0 Responsibilities:
6.0 Exemptions:
7.0 General R&R Program Requirements:
8.0 Program Initiation/Disposition:
9.0 ANII Requirements:
10.0 Repair & Replacement Requirements
11.0 Repair/Replacement Plans (Work Orders)
12.0 Small Item Alternative Requirements:
13.0 Reports/Records:

Section 13 Containment Program Rev. 3

1.0 Introduction
1.1 General
1.2 Applicable Documents / References
1.3 Definitions
1.4 Responsibility
1.5 Authorized Inspection Agency
1.6 Records and Reports
1.7 Inaccessible Surface Areas
1.8 Examination Methods
1.9 Repair or Replacement Activities
2.0 Class MC Program (IWE)
2.1 Basis for Preparation
2.2 Components Subject to Examination
2.3 Exemption Criteria
2.4 Technical Specification Requirements
2.5 Inservice Inspection Program Plan Tables
2.6 Examinations
2.7 Engineering Accessible Evaluation
2.8 Records / Reports
3.0 Class CC Program (IWL)
3.1 Basis for Preparation
3.2 Components Subject to Examination
3.3 Exemption Criteria
3.4 Technical Specification Requirements
3.5 Inservice Inspection Program Plan Tables
3.6 Tendon Program
3.7 Engineering Accessible Evaluation
3.8 Records / Reports

Section 14 Containment Repair & Replacement Program Rev. 3

1.0 Purpose
2.0 References
3.0 Definitions
4.0 Code Requirements
5.0 Responsibilities
6.0 R&R Exemptions
7.0 General R&R Program Requirements
8.0 Program Initiation/Disposition
9.0 ANI / ANII Requirements
10.0 Repair Requirements
11.0 Replacement (and Modification) Requirements
12.0 Repair / Replacement Plans

1.0 INTRODUCTION

1.1 General

1.1.1 This Inservice Inspection (ISI) Program outlines the Fourth Interval Inservice Inspection examination requirements for Class 1, Class 2, and Class 3 systems, and components for R. E. Ginna Nuclear Power Plant (Ginna Station). The Fourth Inspection Interval begins on January 1, 2000, as permitted by Paragraph IWA-2400 of American Society of Mechanical Engineers (ASME) Boiler and Pressure Code Section XI, the Third Interval concluded December 31,1999. Intervals are defined in Paragraph 1.3. Corporate Engineering Programs or designee is responsible to develop, control and maintain the ISI Program for R. E. Ginna Nuclear Power Plant.

1.1.1.1 This Program is based on the requirements of the 1995 Edition with 1996 Addenda (for Class 1, Class 2, and Class 3 systems and components) of the American Society for Mechanical Engineers Boiler and Pressure Vessel Code, Section XI, "Inservice Inspection of Nuclear Power Plant Components" as approved by a Relief Request to the Nuclear Regulatory Commission.

1.1.2 The Inservice Inspection (ISI) Program for Class MC and Class CC System and Components conforms to a Final Rule amending 10CFR50.55a which implements IWE and IWL with noted stipulations and limitations. The First Interval Inservice Inspection begins September 09,1996 and concludes September 09, 2008. This program is defined in Section 13.

1.1.2.1 This Containment (Class MC and Class CC) program is based on the requirements specified by the Rule Making and implements IWE, IWL, and applicable IWA articles of the 1992 Edition with the 1992 Addenda of the American Society of Mechanical Engineers Section XI Code.

1.1.3 Inservice Testing of Pumps (IWP) and Valves (IWV) is performed in accordance with the "Inservice Test Program".

1.1.4 Commercial operating date for R.E. Ginna Nuclear Power Plant was July 1, 1970.

1.2 Applicable Documents

R. E. Ginna Nuclear Power Plant has adopted the following documents as the basis for this Inservice Inspection Interval and is committed to satisfying their requirements. Specific reliefs to the requirements of ASME Section XI are identified and located in Section 2, "ISI Relief Requests". This Program was developed in accordance with the following documents:

1.2.1 ASME Boiler and Pressure Vessel Code Section XI, "Rules for Inservice Inspection of Nuclear Power Plant Components," 1995 Edition, 1996 Addenda.

1.2.1.1 ASME Boiler and Pressure Vessel Code Section XI, "Rules for Inservice Inspection of Nuclear Power Plant Components", 1992 Edition, 1992 Addenda.

1.2.2 U.S. Nuclear Regulatory Commission (USNRC) Regulatory Guides:

a. 1.14, Rev. 1, "Reactor Coolant Pump Flywheel Integrity" (As modified by Westinghouse WCAP-15666A)

b. 1.147, Latest Revision, "Inservice Inspection Code Case Acceptability - ASME Section XI, Division l"

c. 1.150, Rev. 1, "Ultrasonic Testing of Reactor Vessel Welds During Preservice and Inservice Examinations"

d. 1.83, Rev. 1, "Inservice Inspection of Pressurized Water Reactor Steam Generator Tubes"

e. 1.26, Rev. 3 "Quality Group Classifications and Standards for Water, Steam, and Radioactive Waste Containing Components of Nuclear Power Plants.

f. 1.29, Rev. 3, "Seismic Design Classification".

g. 1.121, Rev. 0, "Bases for Plugging Degraded PWR Steam Generator Tubes".

h. 1.65, Rev. 0, "Materials and Inspections for Reactor Vessel Closure Studs".

1.2.3 ASME Code Cases

In accordance with 10 CFR 50.55a, Footnote 6, ASME Section XI Code Cases referenced in Regulatory Guide 1.147, "Inservice Inspection Code Case Acceptability- ASME Section XI, Division 1," may be incorporated into the Ginna Station ISI Program. Those Code Cases included in Regulatory Guide 1.147 that will be implemented at Ginna Station are identified in this section. Each Code Case is preceded by information on the applicable component/area, ASME requirements, and how the Code Case will be implemented. Paragraph 1.2.3.1 lists those code cases that have been technically reviewed and endorsed, with or without conditions by the Nuclear Regulatory Commission in Regulatory Guide 1.147 and will be implemented during the 4th ten year Inspection Interval.

Use of any subsequent NRC endorsed code cases that are identified in revisions to the Regulatory Guide 1.147 may be incorporated in the program and used during the 4th ten year Inspection Interval.

1.2.3.1 USNRC Regulatory Guide 1.147 - Approved ASME Section XI Code Cases

Code Case No.	Sect. XI References	Component/Area
N-416-2	IWA-4000	Alternative Pressure Test Requirements for Welded Repairs or Installation of Replacement Items by Welding, Class 1,2 and 3.

Note: Regulatory Guide 1.147 states that Code Case N-416-2 is acceptable subject to the following condition in addition to those conditions specified in the Code Case. The provisions of IWA-5213, "Test Condition Holding Times," 1989 Edition, are to be used.

N-460	IWA-2000/3000	Alternative examination coverage for Class 1 and Class 2 welds.

1.2.3.1 (Con't)

Code Case No.	Sect. XI References	Component/Area
N-481	B-L-1, Item B12.10	Alternative examination requirements for Cast Austenitic Pump Casings.
N-495	IWC-5222, IWD-5223	Hydrostatic Testing of Relief Valves.
N-498-4	IWB-2500-1, Category B-P IWC-2500-1, Category C-H IWD-2500-1, Category D-A, D-B and D-C as applicable.	Alternative Rules for 10-Year System Hydrostatic Testing for Class 1, 2, and 3 Systems.

Note: Regulatory Guide 1.147 states that Code Case N-498-4 is acceptable subject to the following condition in addition to those conditions specified in the Code Case. The provisions of IWA-5213, "Test Condition Holding Times," 1989 Edition, are to be used.

N-513	N/A	Evaluation Criteria for Temporary Acceptance of Flaws in Class 3 Piping.

Note: Regulatory Guide 1.147 states that Code Case N-513 is acceptable subject to the following condition in addition to those conditions specified in the Code Case.

(1) Specific safety factors in paragraph 4.0 must be satisfied.

(2) Code Case N-513 may not be applied to:

- (a) Components other than pipe and tube.
- (b) Leakage through a gasket.
- (c) Threaded connections employing nonstructural seal welds for leakage prevention (through seal weld leakage is not a structural flaw; thread integrity must be maintained).
- (d) Degraded socket welds.

N-522	IWC-2500-1, Category C-H	Pressure Testing of Containment Penetration Piping.

1.2.3.1 (Con't)

Code Case No.	Sect. XI References	Component/Area
N-523-2	N/A	Mechanical Clamping Devices for Class 2 and 3 Piping.
N-532-1	Form NIS-1 and NIS-2	Alternative Requirements to Repair And Replacement Documentation Requirements and Inservice Summary Report Preparation and Submission

Note: Regulatory Guide 1.147 states that Code Case N-532-1 is acceptable subject to the following condition in addition to those conditions specified in the Code Case.
(1) Code Case N-532-1 requires an Owner's Activity Report Form OAR-1 to be prepared and certified upon completion of each refueling outage. The OAR-1 forms must be submitted to the NRC within 90 days of the completion of the refueling outage.

N-526	IWB-2420(b) IWC-2420(b)	Alternative Requirements for Successive Inspections of Class 1 and 2 Vessels Section XI, Division 1

1.2.3.1 (Con't)

Code Case No.	Sect. XI References	Component/Area
N-546	IWA-2300	Alternative Requirements for Qualification of VT-2 Examination Personnel, Section XI, Division 1

Note: Regulatory Guide 1.147 states that Code Case N-546 is acceptable subject to the following condition in addition to those conditions specified in the Code Case.
(1) Qualify examination personnel by test to demonstrate knowledge of Section XI and plant specific procedures for VT-2 visual examination.
(2) Requalify examination personnel by examination every three years.
(3) This code case is applicable only to the performance of VT-2 examinations and may not be applied to other VT-2 functions such as verifying the adequacy of procedures and training VT-2 personnel.

N-583	Appendix VII-4240	Annual Training Alternative, Section XI, Division 1

Note: Regulatory Guide 1.147 states that Code Case N-583 is acceptable subject to the following condition in addition to those conditions specified in the Code Case.
(1) Supplemental practice shall be performed on material or welds that contain cracks, or by analyzing prerecorded data from material or welds that contain cracks.
(2) The training must be completed no earlier than 6 months prior to performing ultrasonic examinations at a licensee's facility

N-592	IWA-2300	ASNT Central Certification Program, Section XI, Division 1
N-663	IWB-2500-1, Category B-F IWB-2500-1, Category B-J IWC-2500-1, Category C-F-1 IWC-2500-1, Category C-F-2	Alternative Requirements for Class 1 and 2 Surface Examinations

1.2.3.1 (Con't)

Code Case No.	Sect. XI References	Component/Area
N-648-1	IWB-2500-1, Category B-D	Alternative Requirements for Inner Radius Examinations of Class 1 Reactor Vessel Nozzles Section XI, Division 1

Note: Regulatory Guide 1.147 states that Code Case N-648-1 is acceptable subject to the following condition in addition to those conditions specified in the Code Case. In place of a UT examination, licensees may perform a visual examination with enhanced magnification that has a resolution sensitivity to detect a 1-mil width wire or crack, utilizing the allowable flaw length criteria of Table IWB-3512-1 with limiting assumptions on the flaw aspect ratio. The provisions of Table IWB-2500-1, Examination Category B-D, continue to apply except that, in place of examination volumes, the surfaces to be examined are the external surfaces shown in the figures applicable to this table.

N-658	Appendix VIII, Supplement 2	Qualification Requirements for Ultrasonic Examination of Wrought Austenitic Piping Welds Section XI, Division 1
N-706	IWB-2500-1, Category B-B, B-D and B-J IWC-2500-1, Category C-A, C-B and C-B	Alternative Examination Requirements of Table IWB-2500-1 and Table IWC-2500-1 for PWR Stainless Steel Residual and Regenerative Heat Exchangers

1.2.4 R.E. Ginna Updated Final Safety Analysis Report (UFSAR):
Section 5.4 - For Class 1
Section 6.6 - For Class 2 and 3

1.2.5 Letter dated March 23, 1981, from Darrell G. Eisenhut, Director, Division of Licensing, USNRC, regarding Technical Specification Revisions for Snubber Surveillance

1.2.5.1 ASME/ANSI OMc-1990, Part 4 Examinations and Performance Testing of Nuclear Power Plant Dynamic Restraints (Snubbers).

1.2.6 USAS B31.1.0-1967, "Power Piping" for High Energy Systems

1.2.7 R. E. Ginna, "Improved" Technical Specifications.

1.2.8 Letter dated February 16, 1989, to Mr. Carl Stahle, USNRC, PWR Project Directorate No. 1, regarding proposed changes to Snubber Technical Specification R. E. Ginna Nuclear Power Plant, Docket No. 50-244.

1.2.9 R. E. Ginna Nuclear Power Plant Interface Procedure IP-IIT-5, Titled – "Snubber Inspection and Testing Program".

1.2.10 Electric Power Research Institute PWR Steam Generator Inspection Guidelines, Rev. 5 or latest approved revision.

1.2.11 Code of the Federal Regulations, 10CFR Part 50.

1.2.11.1 10 CFR Part 50, Industry Codes and Standards; Amended Requirements; Final Rule dated September 22. 1999.

1.2.12 USNRC, NRC Region I Inspection Report 50-244/90-12, Section 3.4 regarding repair program "Service Induced" and "Code Rejectable" repairs.

1.2.13 USNRC, NRC Regulatory Issue Summary 2004-12 Clarification on use of later editions and addenda to the ASME OM and Section XI, dated July 28, 2004.

1.2.14 Constellation Nuclear Generation Fleet Administrative Procedure CNG-AM-1.01-1008 Rev. 0000, ASME Section XI In-Service Inspection Program.

1.2.15 Constellation Nuclear Generation Fleet Administrative Procedure CNG-AM-1.01-1020 Rev. 0000, ASME Section XI Repair/Replacement Program.

1.2.16 LR-IWBD-PROGPLAN, ASME Section XI, Subsections IWB, IWC and IWD Inservice Inspection Program [G0027]

1.2.17 LR-IWF-PROGPLAN, ASME Section XI, Subsections IWF Inservice Inspection Program [G0039]

1.2.18 LR-BOLT-PROGPLAN, Bolting Integrity Program [G0041]

1.2.19 LR-IWEL-PROGPLAN, ASME Section XI, Subsections IWE and IWL Inservice Inspection Program [G0042]

1.2.20 LR-CASS-PROGPLAN, Thermal Aging Embrittlement of Cast Austenitic Stainless Steel Program [G0046]

1.2.21 LR-RVH-PROGPLAN, Nickel-Alloy Nozzles and Penetrations Inspection Program [G0051]

1.3 Inspection Intervals

1.3.1 The Inservice Inspection Intervals for Class 1 components started on January 1, 1970, with the Second Interval starting on January 1, 1980. The Third Inspection Interval started on January 1, 1990. The Fourth Inspection Interval shall start on January 01, 2000.

1.3.2 For Class 2 and Class 3, the First Inspection Interval started on May 1, 1973; the Second on January 1, 1980; the Third on January 1, 1990; and the Fourth on January 01, 2000.

1.3.3 The Fourth Inspection Interval for Class 1, 2 and 3 is scheduled to end December 31, 2009. However, this date is subject to change as allowed by IWA-2400, which states that each Inspection Interval may be decreased or extended (but not cumulatively) by as much as one year. If R. E. Ginna Nuclear Power Plant is out of service continuously for 6 months or more, the Inspection Interval and associated period during which the outage occurred may be extended for a period of time equivalent to the outage.

1.3.4 For Class CC and MC, as amended by the Final Rule defines the First Inspection Interval starting on September, 09, 1996. The First Period ends on September, 09, 2001; the Second Period ends on September 09, 2005; and the Third Period ends on September 09, 2008. See Section 13 for details.

1.3.5 A 10-year examination Program Plan [Supplement 1 to the Inservice Inspection (ISI) Program], will describe the distribution of examinations for Class 1, Class 2, and Class 3 components in accordance with Inspection Program B, the IWB-2400, IWC-2400, IWD-2400 and IWF-2400 of Section XI, "Rules for Inservice Inspection of Nuclear Power Plant Components", 1995 Edition, 1996 Addenda.

1.3.6 A 10-year examination Program Plan [Supplement 1 to the Inservice Inspection (ISI) Program], will describe the distribution of examination of examinations for Class MC items in accordance with IWE-2400 and as amended by the Final Rule making. A 5-year examination Program Plan [Supplement 1 to the Inservice Inspection (ISI) Program], will describe the distribution of examinations for Class CC items in accordance with IWL-2400 and as amended by the Final Rule making.

1.4 Classification of Components

The Program Plan components and piping have been classified for purposes of Inservice Inspection based on ASME Section XI, Article IWA-1320, definitions contained in l0 CFR 50.2, and USNRC Regulatory Guide 1.26.

1.5 Responsibility for Class 1.2, and 3 ISI Piping and Components

As specified in Paragraph IWA-l400 of ASME Section XI, Corporate Engineering Programs and Ginna Station bears the overall responsibility for implementation of an ISI Program. Administrative Procedures, NDE Procedures, ISI Plans, and Schedules are in place to control and implement these Inservice Inspection requirements. The responsibilities for Class MC and CC components are defined in Section 13.

1.6 Records for Class 1, 2, and 3 ISI Piping and Components

Examination records and documentation of results provide the basis for evaluation and facilitate comparison with previous results and subsequent inspections. In accordance with Section XI, IWA-6000, these records will be maintained for the plant life. Record requirements for Class MC and CC Components are defined in Section 13.

1.6.1 An Inservice Inspection Report shall be generated to document applicable Inservice Inspection and associated Repair and Replacement activities for Class 1, 2, and 3 ISI piping and components. ASME NIS-l/OAR-1 and NIS-2/NIS-2A Forms or equivalents shall be generated and included within the Inservice Inspection Report. Report requirements for Class MC and CC are defined in Section 13.

1.7 Examination Methods and Requirements

Examination methods which will be used to satisfy Code examination requirements have been listed for nonexempt Class 1, Class 2, and Class 3 components, as applicable.

Provided in the following is a brief explanation of the examination methods which will be performed to satisfy the Code requirements.

Personnel performing nondestructive examinations will be qualified in accordance with written procedures prepared as required by Paragraph IWA-2300 of Section XI. Methods of examination are also described in the applicable sections of this Inservice Inspection Program.

1.7.1 Visual Examination Method for Class 1, 2, and 3 Components

1.7.1.1 Visual examinations (VT) will be performed in accordance with IWA-2210 of ASME Section XI. IWA-2210 defines the three types of VT examinations as follows:

1.7.1.1.1 VT-1 examinations are conducted to determine the condition of the part, component or surface examined. The examination shall determine conditions such as cracks, wear, corrosion, erosion, or physical damage on the surfaces of the part or components. This type of examination may be performed by direct or remote methods as defined in IWA-2211.

1.7.1.1.2 VT-2 examinations are conducted to detect leakage (or abnormal leakage) from pressure-retaining components during Leakage tests as defined in IWA-2212. VT-2 examinations shall be used as applicable for Class MC, see Section 13.

1.7.1.1.3 VT-3 examinations are conducted to determine general mechanical and structural conditions of components and their supports such as the presence of loose parts, debris, or abnormal corrosion products, wear, erosion, corrosion, and the loss of integrity at bolted or welded connections. VT-3 Examinations are also conducted to determine conditions related to operability of mechanical and hydraulic snubbers, and spring devices.

1.7.1.2 Visual examination methods for class MC and CC components are defined within Section 13.

1.7.2 **Surface Examination Method for Class 1, 2, and 3 Components**

1.7.2.1 A surface examination is performed to detect the presence of discontinuities open to the surface of a material. Techniques for surface examination include either magnetic particle (MT) or liquid penetrant (PT) methods. Surface examinations will be conducted as defined in IWA-2220.

1.7.3 **Volumetric Examination Method**

1.7.3.1 A volumetric examination is performed to detect the presence of discontinuities in the volume of a material. Such volumetric examinations include radiographic (RT), ultrasonic (UT), and eddy current (ET). Volumetric examinations will be conducted as defined in IWA-2230.

1.7.3.2 Radiography may be performed by utilizing either x-ray or gamma ray techniques.

1.7.3.3 The UT examinations may be performed by utilizing either manual or mechanized UT (Mech. UT) techniques in accordance with Appendix III, Appendix VII, and Appendix VIII of Section XI and Regulatory Guide 1.150, Rev. 1.

1.7.3.3.1 As specified within 50.55a(g)(6)(ii) (c) of the NRC Final Rule, a phased implementation of ASME Section XI Mandatory Appendix VIII over a three (3) year period is required 6 months after September 22, 1999. This phased implementation of Appendix VIII shall be in accordance with the timelines specified within the Final Rule.

1.7.3.4 The ET Method will be utilized in the examination of heat exchanger tubing in accordance with ASME Section V, Article 8, Appendix II and Appendix IV of ASME Section XI and USNRC Regulatory Guide 1.83.

1.7.4 **Alternative Examination Methods**

1.7.4.1 Alternative examination methods may be performed to those described in 1.7.1, 1.7.2, and 1.7.3 as allowed in IWA-2240. These may include such things as newly developed techniques, provided that these alternative methods are shown by practical demonstration to be equivalent or superior to those of the specific method to the satisfaction of Ginna Station Level III NDE Examiner & the Authorized Nuclear Inservice Inspector (ANII).

1.7.4.2 Examinations that detect flaws which require evaluation may be supplemented by other examination methods and techniques to determine the character of the flaw.

1.7.4.3 Alternative examination methods specified within Regulatory approved Code Cases and/or approved Relief Requests may be utilized.

1.7.5 **Evaluation of Examination Results and Successive Inspections**

1.7.5.1 The evaluation of nondestructive examination results shall be in accordance with Article IWA-3000 of Section XI. All relevant indications will be subject to comparison with previous data to aid in characterization and determination of origin.

1.7.5.2 Class 1 components containing relevant service induced conditions will be considered acceptable for continued service providing an Analytical evaluation performed demonstrates the component's acceptability and is subsequently examined in accordance with the requirements of IWB-3132.3, IWB-3142.4, and IWB-3144(b). Acceptance by Repair or Replacement can also be performed. Successive inspections for Class 1 relevant service induced conditions shall comply with the requirements of IWB-2420(b) and (c).

1.7.5.3 Class 2 components containing relevant service induced conditions will be considered acceptable for continued service providing an Analytical evaluation performed demonstrates the component's acceptability and is subsequently examined in accordance with the requirements of IWC-3122.3, IWC-3132.3, and IWC-3134(b). Acceptance by Repair or Replacement can also be performed. For Class 2 relevant service induced conditions, successive inspections shall comply with the requirements of IWC-2420(b) and (c).

1.7.5.4 Class 3 components containing relevant service induced conditions will be considered acceptable for continued service providing an evaluation performed demonstrates the component's acceptability and is subsequently examined in accordance with the requirements of IWB-3132.3, IWB-3142.4, and IWB-3144(b). Acceptance by Repair or Replacement can also be performed. Successive inspections for Class 3 relevant service induced conditions shall comply with the requirements of IWD-2420(b), (c), and (d).

1.7.5.5 Class 1, Class 2, and Class 3 Supports whose visual examination does not reveal conditions as described in the acceptance standards (IWF-3410), shall be acceptable for service.

1.7.5.5.1 Visual examinations which detect relevant service induced conditions as described in the acceptance standards shall be unacceptable for service unless accepted or corrected by one of the following methods;

- Corrective measures (adjustment, repair, or replacement), and subsequent reexamination including the requirements of IWF-2220(b) (Note: Successive examination requirements of IWF-2420 must be applied to supports containing relevant service induced conditions in which corrective measures were utilized for acceptance.).

- Evaluation [1] or Test to the extent necessary to substantiate its integrity for its intended service (Note: Visual examinations that detect surface flaws that exceed IWF-3400 criteria shall be supplemented by either surface or volumetric examinations).

Note 1: Flaws or relevant conditions in which analytical evaluations are being performed to determine acceptance, may be considered acceptable for continued service during this evaluation process.

1.7.5.6 For Class 1 and 2 (excluding component supports), Engineering "Analytical Evaluations" required by IWB-3142.4 and IWC-3132.3 shall be submitted by Engineering to the Nuclear Regulatory Commission as required by IWB-3144(b) and IWC-3134(b).

1.7.6 **Additional Examinations for Class 1, 2, and 3 Components**

1.7.6.1 Inservice examinations performed that reveal service induced flaws that exceed the acceptance standards shall have additional examinations performed.

1.7.6.2 Additional examinations shall be performed to the extent required by IWB-2430 whenever a service induced rejectable flaw is identified during the performance of ISI examinations of Class 1 Components in accordance with the requirements specified within IWB.

1.7.6.3 Additional examinations shall be performed to the extent required by IWC-2430 whenever a service induced rejectable flaw is identified during the performance of ISI examinations of Class 2 Components in accordance with the requirements specified within IWC.

1.7.6.4 Additional examinations shall be performed to the extent required by IWD-2430 whenever a service induced rejectable flaw is identified during the performance of ISI examinations of Class 3 Components in accordance with the requirements specified within IWD.

1.7.6.5 Additional examinations shall be performed to the extent required by IWF-2430 whenever a service induced rejectable flaw is identified during the performance of ISI examinations of Class 1, 2, and 3 Component Supports in accordance with the requirements specified within IWF. ASME Section XI Code Interpretation XI-1-86-30R may be invoked when considering additional component support examinations.

1.7.7 **License Renewal Aging Management Program Examination Requirements**

1.7.7.1 When selecting examination techniques for Class 1, 2, and 3 pressure retaining bolting, the guidance of EPRI NP-5769, "Degradation and Failure of Bolting in Nuclear power Plants", as modified by NUREG-1339, "Resolution of Generic Safety issue 29: Bolting Degradation or Failure in Nuclear Power Plants" should be considered.

1.8 **Repair and Replacement Requirements for Class 1, 2, and 3 Items**

1.8.1 Repairs and Replacements shall be performed to the requirements of IWA-4000 of ASME Section XI, 1995 Edition with the 1996 Addenda. Code Cases and Relief Requests may be used when approved.

1.8.2 Repair and Replacements shall be performed to the requirements specified within Section 12 for Class 1, 2, and 3 items.

1.8.3 Repairs and Replacements to Class MC and Class CC Containment items shall be performed to the requirements specified within Section 14.

1.8.4 Repair and Replacement (which includes Modification) requirements, are applicable to ASME Class 1, 2, and 3 pressure retaining components and piping systems and their supports, unless specifically exempted by ASME Section XI, 1995 Edition with the 1996 Addenda, Article IWA-4120.

1.8.5 The boundary subject to Hydrostatic Pressure Testing and the associated VT-2 examination is limited to the portion Repaired or Replaced, within the Class 1, 2, or 3 boundary, Per the Code and Code Case N-416-2, a leakage exam may be performed in lieu of the required hydro test for Class 1, 2, and 3 Repair or Replacement.

1.8.6 Class 1, 2 and 3 components, piping, and associated valves NPS 1" and smaller are exempt from the system pressure test.

1.8.7 Reports and records to the extent required by IWA-4180 and IWA-6000, as applicable, shall be maintained for Required Repair and Replacements.

1.8.8 During the conduct of pressure tests for Repair/Replacement on Class 1, 2, or 3 items, certified VT-2 examination personnel, using Ginna Station approved NDE VT-2 examination procedure and the associated recording form, will examine the Repair/Replacement area under pressurization. The examination and test boundaries shall be documented.

1.9 Inservice Inspection (ISI) for System Pressure Testing

1.9.1 General Requirements

1.9.1.1 Leakage testing shall be conducted on all Class 1, 2, and 3 pressure retaining components in accordance with the requirements of Section XI Articles IWA-5000, IWB-5000, IWC-5000, IWD-5000; and Section XI Table IWB- 2500-1 Examination Category B-P, Table IWC-2500-1 - Examination Category C-H, and Table IWD-2500-1 - Examination Category D-B.

1.9.1.2 The Leakage Test requirements for ASME Class CC and MC components are identified in Section 13 as applicable.

1.9.1.3 "High Energy Program" Main Steam and Feedwater Piping shall also be pressure tested on these non-class systems in accordance with Section 8.

1.9.1.4 Pressure tests are conducted from normal operating pressure, to a pressure up to 25% over design pressure. The degree of pressurization and the test boundary depends upon the type of pressure test being performed. A visual examination (VT-2 method) is performed in concert with the pressure test on pressure retaining components under test pressure.

1.9.1.5 Alternative requirements of Regulatory approved Code Cases and/or Relief Requests may be utilized in lieu of paragraphs 1.9.1.1 and 1.9.1.4.

1.9.2 **System Pressure Test Boundary for ISI**

Pressure retaining components within each system boundary shall be subject to a system pressure test. The various types of pressure tests which may be required during the inspection interval are described in the following:

1.9.2.1 **ISI System Leakage Test Boundary for Class 1, 2, and 3 Components**

The boundary subject to test pressurization at nominal operating pressure and temperature, and the associated VT-2 examination during a leakage pressure test will extend to the pressure retaining components within the system boundary.

1.9.2.2 **ISI System Hydrostatic Pressure Test Boundary**

This test is performed once each inspection interval. The boundary subject to test pressurization above nominal operating pressure or system pressure, and the associated VT-2 examination during a system hydrostatic pressure test includes all Class 3 components and piping. An ISI hydro test is not required for Class 1 and 2 components and piping. Per Code Case N-498-4, a Leakage exam may be performed in lieu of required hydro test.

1.9.2.3 **Pneumatic Pressure Test Boundary**

This test is limited to Class 2 and 3 systems. The boundary subject to test pressurization and the associated VT-2 examination during a system pneumatic pressure test are the same as a hydrostatic pressure test.

1.9.3 **ISI System Pressure Test Requirements for Class 1, 2, and 3 Components**

1.9.3.1 **General**

A Hydrostatic test may be performed in lieu of a Leakage Test when elected by the owner on Class 1, 2 or 3 systems. In the performance of a Hydrostatic Test, the contained fluid in the system or fluid added to the system shall serve as the pressurizing or test medium. In steam systems either water or gas may be used. Where gas is used, the test procedures shall permit the detection and location of through wall leakages in components of the system tested. The temperature of the test medium will be that of the available source unless otherwise specified by the implementing test procedure/document. The test medium will be of a quality which is equal to or better than the system operating medium.

1.9.3.1.1 During conduct of hydrostatic tests, all entrained air will be vented from the system except in the following cases:

a. Atmospheric Storage Tanks
b. 0-15 psi Storage Tanks
c. Class 1 systems where a mixture of steam, water, and noncondensible gases are present in a proportion typical of normal startup conditions.
d. Normal Steam Systems

1.9.3.1.2 For Leakage tests, the level of system pressure and temperature indicated or recorded by normal operating system instrumentation, or alternatively by test instrumentation is acceptable. For hydrostatic tests, the instrument requirements of IWA-5260 must be met.

1.9.3.2 **System Leakage Pressure Test Requirements**

1.9.3.2.1 The system leakage pressure test for Class 1 shall be conducted at a pressure not less than nominal operating pressure associated with 100% Rated Reactor Power.

1.9.3.2.2 For Class 1 pressure and temperature will be attained at a rate in accordance with the heat-up limitations specified in the Ginna Technical Specifications for the component/piping system being tested.

1.9.3.2.3 The system leakage test for Class 2 and 3 components shall be conducted at nominal operating pressure during system operation and shall be acceptable as the test pressure for the system leakage test.

1.9.3.3 **Hydrostatic Pressure Test Requirements**

1.9.3.3.1 **General**

Code Case N-498-1 stipulations may be employed on Class 3 required Systems in lieu of the 10 year Hydrostatic Test. System Hydrostatic Pressure Tests may be performed in lieu of ISI System Leakage Tests or Repair and Replacement Activities as warranted. Hydrostatic test pressure requirements vary among each of the classifications. The minimum test pressure will be maintained for the entire duration of the test, with the exception of tests performed at temperatures greater than 200°F, where the examination phase may be performed at a lower pressure corresponding to 200°F. The test pressure shall not exceed the maximum allowable test pressure of any component within the test boundary.

1.9.3.3.2 The hydrostatic test pressure, including static head, will not exceed 106% of the specified test pressure for the system anywhere within the test boundary.

1.9.3.3.2.1 In cases where the highest and lowest elevations cannot be isolated, and the test pressure including static head, would exceed 106% of the specified test pressure at the lowest point, the test pressure will be reduced.

1.9.3.3.2.2 In cases where the high and low elevations result in unreasonably small differences between the test pressure including static head, and 106% of the specified test pressure, the test pressure will be reduced to accommodate the precision of the test instrument.

1.9.3.3.2.3 The test pressure, as identified in sections 1.9.3.3.2.1 and 1.9.3.3.2.2, will be adjusted such that the test pressure, including static head, does not exceed 106% of the specified test pressure at the lowest point. The resulting pressure at the highest point will be considered acceptable.

1.9.3.3.3 The hydrostatic test boundary will end at the transition between system piping and instrumentation tubing shown on P&ID drawings. When this transition does not occur at an isolation valve, the boundary will be extended to the first isolation valve after the transition.

1.9.3.4 The following sections list the hydrostatic test pressure requirements which will be met for each Code classification:

1.9.3.4.1 Class 1

The system hydrostatic pressure test is conducted at the pressure calculated from the following table based on the test temperature:

Test Temperature, Deg. F.	Test Pressure
100 or less	1.10 P_o
200	1.08 P_o
300	1.06 P_o
400	1.04 P_o
500 or greater	1.02 P_o

"P_o" is the nominal operating pressure corresponding with 100% rated reactor power. Linear interpolation will be used at intermediate test temperatures. Technical Specification heat-up/cool-down limits will be observed.

1.9.3.4.2 **Class 2, 3:**

a. The test pressure will be at least 1.10 times the system pressure for systems with a design temperature of 200°F or less, and at least 1.25 times the system pressure for systems with a design temperature above 200°F. The system pressure will be the lowest pressure setting among the number of safety or relief valves provided for overpressure protection within the boundary of the system to be tested. For systems (or portions of systems) not provided with safety or relief valves, the system design pressure will be substituted for the system pressure.

b. In the case of atmospheric storage tanks, the nominal hydrostatic pressure developed with the tank filled to its design capacity will be acceptable as the test pressure.

c. For 0 to 15 psi storage tanks, the test pressure will be 1.1 times the design pressure of vapor or gas space above liquid level for which overpressure protection is provided by the relief valves. If relief valves are not installed, the test pressure will be equal to 1.1 times the normal operating pressure.

d. For the purpose of the test, open-ended portions of a suction or drain line from a storage tank extending to the first shutoff valve are considered as an extension of the storage tank.

e. For open ended portions of discharge lines beyond the last shutoff valve in nonclosed systems, a test that demonstrates unimpaired flow will be performed in lieu of a system hydrostatic pressure test. Unimpaired flow for Class 2 is defined as an "open flow path" and for Class 3 as "adequate flow during system operation".

f. Open ended vent and drain lines extending beyond the last shut off valve and open ended safety or relief valve discharge lines are exempt from hydrostatic testing.

1.9.4 **System Pressure Test Implementation**

1.9.4.1 All pressure testing is implemented using both the VT-2 examination procedure and the specific test procedure for the type of test and portion of system being tested.

1.9.4.1.1 For ISI System Leakage Tests, the Test Procedure shall be a System drawing that identifies the applicable examination boundary and controlled by the responsible implementing group.

1.9.4.2 Applicable Required System Pressure Test Boundaries shall be confirmed prior to examination performance.

1.9.4.3 If leakage occurs at bolted connections on Class 1, 2 or 3 systems that are borated for the purpose of controlling reactivity, one of the bolts shall be removed, VT-3 examined, and evaluated in accordance with IWA-3100. The bolt selected shall be the one closest to the source of the leakage. When the removed bolt has evidence of degradation, all remaining bolting in the connection shall be removed, VT-3 examined, and evaluated in accordance with IWA-3100.

ASME Section XI Interpretation Number 44 – Replies to Technical Inquiries July 1, 1998 through December 31, 1998; Interpretation question XI-1-98-39 states: "Is it the intent of IWA-5250(a)(2) that bolting be removed and a VT-3 visual examination be performed only when the system is borated for the purpose of controlling reactivity?" Answer: Yes. (For Winter 1984 Addenda through the 1995 Edition with the 1997 Addenda).

2.0 Class 1 Program Plan

2.1 Basis for Preparation

2.1.1 Preparation of the Class 1 ISI program plan was based on the requirements of Articles IWB-1000 and IWB-2000 of Section XI. These articles provide rules and guidelines for exemptions, inspection schedules, and examination requirements for Class 1 pressure retaining components and their integral attachments.

2.1.2 As allowed by 10 CFR 50.55a (b)(2)(ii), the extent and frequency requirements for Class 1 Category B-J weld examinations may be based on the 1974 Edition of ASME Section XI with Addenda through Summer, 1975. This earlier Code does not have any criteria established for the selection of specific welds to be examined, and therefore, stress level criteria, and terminal end criteria is not required for the selection process. Instead of utilizing the earlier Code rules for Category B-J welds (which has no selection guidance), the 1995 Edition with 1996 Addenda Code rules will be utilized to the extent practical. In lieu of the stress level selection criteria Table IWB-2500-1, Note 1(b), all accessible

2.1.2 (Con't)

terminal end welds (including terminal ends to vessel per Note 1(a) of Table IWB-2500-1) shall be selected. Refer to Code Table 1 in Section 4 for selection criteria.

2.2 **Components Subject to Examination**

2.2.1 Based on the requirements of Section XI, Class 1 nonexempt pressure-retaining components and their integral attachments will be subject to examination during the fourth inspection interval. The Section XI requirements may be modified with the incorporation of approved Code Cases and or Relief Requests.

2.3 **Extent and Frequency of Examinations**

2.3.1 Class 1 components, as listed in Section 4, Table 1 shall be examined to the extent and frequency required in Table IWB-2500-l and Figures IWB 2500-1 through IWB 2500-20 of Section XI.

2.4 **ISI Exemption Criteria**

2.4.1 In accordance with IWB-l220, certain Class 1 components are exempt from examination. The following criteria were applied to exempt components from surface and volumetric examinations in accordance with Section XI :

Exemption Criteria	Code Reference
Components that are connected to the reactor coolant system and part of the reactor coolant pressure boundary, and that are such a size and shape so that upon postulated rupture the resulting flow of coolant from the reactor coolant system under normal plant operating conditions is within the capacity of the makeup systems that are operable from on-site emergency power.	IWB-1220(a)
Piping of 1 inch nominal pipe size (NPS) and smaller, except for steam generator tubing	IWB-l220(b) (1)
Components and their connections in piping of 1 inch NPS and smaller	IWB-l220(b) (2)

2.4.1 (Con't)

Reactor vessel head connections and associated piping, NPS 2 and smaller, made inaccessible by control rod drive penetrations. IWB-1220(c)

NOTE: In accordance with NRC Final Rule, IWB-1220(d) Exemption is not allowed.

2.5 **Additional Programs**

2.5.1 The Reactor Coolant Pump Flywheels shall be examined as specified in Section 11 of this Program.

2.5.2 The Steam Generator Tubing shall be examined as specified in Section 11 of this program.

2.6 **Inservice Inspection Program Plan (Supplement 1)**

This plan provides the examination requirements for Class 1 components. These requirements shall be satisfied during the fourth inspection interval.

The Inservice Inspection Program Plan (Supplement 1) is available upon request.

3.0 **Class 2 Program Plan**

3.1 **Basis for Preparation**

3.1.1 Preparation of the Class 2 ISI program plan is based on the requirements of Articles IWC-1000 and IWC-2000 of Section XI. These articles provide rules and guidelines for exemptions, inspection schedule, and examination requirements for Class 2 pressure retaining components and their integral attachments.

3.2 **Components Subject to Examination**

3.2.1 Based on the requirements of Section XI, Class 2, nonexempt pressure-retaining components and their integral attachments will be subject to examination during the fourth inspection interval. The Section XI requirements may be modified with the incorporation of approved Code Cases and or Relief Requests.

3.3 **Extent and Frequency of Examinations**

3.3.1 Class 2 components, as listed in Section 4, Table 2, shall be examined to the extent and frequency required in Table IWC 2500-1 and Figures IWC 2500-1 through IWC 2500-13 of Section XI.

3.4 **ISI Exemption Criteria**

IWC-1220 of Section XI provides the exemption criteria for Class 2 components. The following criteria were used to exempt Class 2 components from surface and volumetric examinations in accordance with IWC-1220.

3.4.1 As needed within the IWC-1221, the following components (or parts of components) of Residual Heat Removal (RHR), Emergency Core Cooling (ECC), and Containment Heat Removal (CHR), systems (or portions of systems) are exempt from the volumetric and surface examination requirements of IWC-2500:

(a) For systems, except high pressure safety injection systems in pressurized water reactor plants:
(1) piping NPS 4 and smaller
(2) vessels, pumps, and valves and their connections in piping NPS 4 and smaller

(b) For high pressure safety injection systems in pressurized water reactor plants:
(1) piping 1 1/2 NPS and smaller
(2) vessels, pumps, and valves and their connections in piping NPS 1 1/2 and smaller

(c) Vessels, piping, pumps, valves, other components, and component connections of any size in statically pressurized, passive (i.e., no pumps) safety injection systems of pressurized water reactor plants.

3.4.1 (Con't)

(d) Piping and other components of any size beyond the last shut off valve in open ended portions of systems that do not contain water during normal plant operating conditions.

3.4.2 As specified within IWC-1222, the following components (or parts of components) of systems (or portions of systems) other than RHR, ECC and CHR systems are exempt from the volumetric and surface examination requirements of IWC-2500:

(a) Piping NPS 4 and smaller.

(b) Vessels, pumps, and valves and their connections in piping NPS 4 and smaller.

(c) Vessels, piping, pumps, valves, other components, and component connections of any size in systems or portions of systems that operate (when the system function is required) at a pressure equal to or less than 275 psig and at a temperature equal to or less than 200°F.

(d) Piping and other components of any size beyond the last shutoff valve in open ended portions of systems that do not contain water during normal plant operating conditions.

3.4.3 Welds or portions of welds that are inaccessible due to being encased in concrete, buried underground, located inside a penetration, or encapsulated by guard pipe.

3.4.4 In addition to the exemptions of IWC-1220, non-piping component size exemptions shall be as follows: Nonpiping components having a cumulative inlet and a cumulative outlet nominal cross section area, neither of which exceeds the nominal cross section area of the applicable exemption size, shall be exempted from the surface, volumetric, and visual VT-1 and VT-3 examination requirements of IWC-2500. The applicable exemption size shall be 4" NPS for all systems except the Class 2 High Pressure Safety Injection System, which shall be 1 1/2" NPS. This position is based on the interpretation of the clarification made by footnote 1 of IWC-1200 of the 1995 Edition with 1996 Addenda to ASME Section XI. For the purpose of applying this criteria, it is assumed that the intention of the Code is not to accumulate the cross-

3.4.4 (Con't)

section areas of piping from different fluid systems entering a given component (e.g., heat exchanger shell & tube sides), nor the non-process piping (e.g., vents, drains and instrumentation).

3.5 **Inservice Inspection Program Plan (Supplement 1)**

This plan provides the examination requirements for Class 2 components. These requirements shall be satisfied during the fourth inspection interval.

The Inservice Inspection Program Plan (Supplement 1) is available upon request.

4.0 **Class 3 Program Plan**

4.1 **Basis for Preparation**

4.1.1 Preparation of the Class 3 ISI program was based on the requirements of Articles IWD-1000 and IWD-2000 of Section XI. These articles provide rules and guidelines for exemptions, inspection schedules, and examination requirements for Class 3 pressure retaining components and their integral attachments.

4.2 **Components Subject to Examination**

4.2.1 Based on the requirements of IWD-2500 of Section XI, Class 3 welded attachments for Vessels, Piping, Pumps, and Valves will be subject to examination during the fourth inspection interval. The Section XI requirements may be modified with the incorporation of approved Code Cases and or Relief Requests.

4.3 **Extent and Frequency of Examinations**

4.3.1 Class 3 components, as listed in Section 4, Table 3 shall be examined to the extent and frequency required in Table IWD 2500-1 and Figure IWD 2500-1 of Section XI.

4.4 ISI Exemption Criteria

4.4.1 In accordance with IWD-1220, certain Class 3 components are exempt from examination. The following exemption criteria was applied to Class 3 systems as specified in IWD-1220:

(a) for systems, except Auxiliary Feedwater Systems in pressurized water reactor plants:
  (1) piping NPS 4 and smaller
  (2) vessels, pumps, and valves and their connections in piping NPS 4 and smaller

(b) for Auxiliary Feedwater Systems in pressurized water reactor plants:
  (1) piping NPS 1 and smaller
  (2) vessels, pumps, and valves and their connections in piping NPS 1 and smaller

(c) components that operate at a pressure of 275 psig or less and a temperature of 200°F or less in systems (or portions of systems) whose function is not required in support of reactor residual heat removal, containment heat removal, and emergency core cooling;

(d) welds or portions of welds that are inaccessible due to being encased in concrete, buried underground, located inside a penetration, or encapsulated by guard pipe.

4.4.2 In addition to the exemptions of IWD-1220, non-piping component size exemptions shall be as follows: Nonpiping components having a cumulative inlet and a cumulative outlet nominal cross section area, neither of which exceeds the nominal cross section area of the applicable exemption size, shall be exempted from visual examination requirements of IWD-2500. The applicable exemption size shall be 4" NPS for all systems except the Class 3 Auxiliary Feedwater System, which shall be 1" NPS. This position is based on the interpretation of the clarification made by footnote 1 of IWD-1220. For the purpose of applying this criteria, it is assumed that the intention of the Code is not to accumulate the cross-section areas of piping from different fluid systems entering a given component (e.g., heat exchanger shell & tube sides), nor the non-process piping (e.g., vents, drains and instrumentation).

4.5 **Inservice Inspection Program Plan (Supplement 1)**

This plan provides the examination requirements for Class 3 components. These requirements shall be satisfied during the fourth inspection interval.

The Inservice Inspection Program Plan (Supplement 1) is available upon request.

5.0 **Class 1, 2, and 3 Component Supports**

5.1 **Basis for Preparation**

5.1.1 Preparation of the component support ISI Program was based on the requirements of Articles IWF-1000 and IWF-2000 of Section XI. These articles provide rules and guidelines for exemptions, inspection schedules, and examination requirements for Class 1, Class 2, and Class 3 component supports

5.2 **Component Supports Subject to Examination**

5.2.1 Based on the requirements of Section XI, nonexempt component supports for the Class 1, Class 2, and Class 3 systems identified in paragraphs 2.2, 3.2, and 4.2 of this section shall be subject to examination during the fourth inspection interval. The component supports requiring examination shall be piping supports and supports other than piping supports that meet the criteria specified within paragraphs 5.3 and 5.4 .

5.3 **Extent and Frequency of Examination**

5.3.1 Component supports selected for examination shall be those components required to be examined under Table IWF-2500-1 once each inspection interval.

5.3.2 In addition to the Code requirements for component supports which includes snubbers, a snubber program is defined in Section 9.

5.4 **ISI Exemption Criteria**

5.4.1 ASME Section XI, 1995 Edition, with 1996 Addenda, does not contain defined exemption criteria for component supports.

5.4.2 Exemption criteria specified in IWB, IWC, IWD, and IWE have been used. In addition, portions of supports that are inaccessible by being encased in concrete, buried underground, or encapsulated by guard pipe are also exempt from the examination requirements of IWF-2000.

5.5 **Inservice Inspection Program Plan (Supplement 1)**

This plan identifies and incorporates the appropriate component supports into the Class 1, 2, and 3 sections of the examination plan. These requirements shall be satisfied during the fourth inspection interval.

The Inservice Inspection Program Plan (Supplement 1) is available upon request.

6.0 **Records and Reports**

6.1 Reports and Records to the extent required by IWA-6000, as applicable, shall be maintained.

7.0 **Miscellaneous**

7.1 Alloy 600 and Alloy 690 Material Identification

7.1.1 The below list identifies Alloy 600 and Alloy 690 Material including 82/182 and 52/152 weld metal at R.E. Ginna Nuclear Power Plant

Reactor Pressure Vessel - Alloy 600 (82/182)
Bottom Head Instrument Tube, J-Groove Weld & Nozzle to Safe End Weld
Lower Internals Radial Support Lugs (Weld Buildup & Welds)
Lower Shell Cladding, Clevis Insert and Dowel Pin
Safety Injection Nozzles ½" ID weld overlaid

Steam Generators – Alloy 600 (82/182)
Tubesheet Alloy 82 Cladding and Seat Bar

Reactor Pressure Vessel Head - Alloy 690 (52/152)
CRDM Penetrations, buttering and welds
CRDM Penetrations to Adapter Welds
Vent Nozzle and RVLIS Nozzle

7.1.1 (Con't)

Core Exit Thermal Couples Instrument Nozzles (CETNA Penetrations) buttering and J-welds.

Steam Generators – Alloy 690 (52/152)

U-Tubes and Feedwater Header J-Tubes
Butter layers on the weld preparations of the primary inlet and outlet nozzles in the channel heads (Nozzle to Safe End Welds)
Divider Plate, Corner Plate, Tubesheet Seat Bar Build-up and Welds
Butter to Shell Cone Handhole Cover (1)
Nozzle Dam Rings and Welds
Primary Manway Diaphragm
Inspection Port Diaphragms (14)
Feedwater Weld to Nozzle Transition Piece and Transition Piece
Feedwater Spool Piece Butter & Welds (Safe End to Elbow Welds)
Tube Plug & Seal Weld
Access Plug to Feedwater Gooseneck Pipe, Elbow and Welds
Head to Tubesheet Weld (W22) Back Cladding Section

8.0 BASIS

8.1 G0027, LR-IWBD-PROGPLAN, ASME Section XI, Subsections IWB, IWC and IWD Inservice Inspection Program. The bases defines the commitments to the NRC for license renewal and the effects of aging on the ASME Section XI, Subsections IWB, IWC and IWD Inservice Inspection Program. The referenced activities or the frequency of performance can not be changed without authorization from the Aging Management Program owner or the License Renewal Coordinator.

8.2 G0039, LR-IWF-PROGPLAN, ASME Section XI, Subsections IWF Inservice Inspection Program. The bases defines the commitments to the NRC for license renewal and the effects of aging on the ASME Section XI, Subsections IWF Inservice Inspection Program. The referenced activities or the frequency of performance can not be changed without authorization from the Aging Management Program owner or the License Renewal Coordinator.

8.3 G0041, LR-BOLT-PROGPLAN, Bolting Integrity Program. The bases defines the commitments to the NRC for license renewal and the effects of aging on the Bolting Integrity Program . The referenced activities or the frequency of performance can not be changed without authorization from the Aging Management Program owner or the License Renewal Coordinator.

8.4 G0042, LR-IWEL-PROGPLAN, ASME Section XI, Subsections IWE and IWL Inservice Inspection Program The bases defines the commitments to the NRC for license renewal and the effects of aging on the ASME Section XI, Subsections IWE and IWL Inservice Inspection Program. The referenced activities or the frequency of performance can not be changed without authorization from the Aging Management Program owner or the License Renewal Coordinator.

8.5 G0046, LR-CASS-PROGPLAN, Thermal Aging Embrittlement of Cast Austenitic Stainless Steel Program. The bases defines the commitments to the NRC for license renewal and the effects of aging on the Thermal Aging Embrittlement of Cast Austenitic Stainless Steel Program. The referenced activities or the frequency of performance can not be changed without authorization from the Aging Management Program owner or the License Renewal Coordinator.

8.6 G0051, LR-RVH-PROGPLAN, Nickel-Alloy Nozzles and Penetrations Inspection Program. The bases defines the commitments to the NRC for license renewal and the effects of aging on the Nickel-Alloy Nozzles and Penetrations Inspection Program. The referenced activities or the frequency of performance can not be changed without authorization from the Aging Management Program owner or the License Renewal Coordinator.

1.0 Introduction:

1.1 General:

R. E. Ginna Nuclear Power Plant, formerly owned by Rochester Gas & Electric has requested relief from those ASME Section XI requirements that have been determined impractical for certain items requiring examination. This section identifies each previously accepted and under review Relief Request submitted to the Nuclear Regulatory Commission for their consideration and acceptance.

Table 1 provides a listing of Relief Requests applicable to R. E. Ginna Nuclear Power Plant.

Following Table 1, detailed Relief Requests are listed. These provide information on the component for which relief is requested, ASME requirements, proposed alternative method, and other pertinent information, as needed. Existing active relief requests can be withdrawn by the owner at any time. Additional relief requests will be submitted to the Nuclear Regulatory Commission, as appropriate, and may be used by the owner when approved.

TABLE 1
SUMMARY OF RELIEF REQUESTS

Relief Request Number	NRC Status	Code Category	Relief Request Subject
1.	Approved	B-A	Defer RPV Examinations to End of Interval.
2.	Withdrawn	B-M-2	Visual Internal Examination of Class 1 valves
3 Rev. 1	Open	B-J C-F-1 C-F-2	Appendix VIII, Supplement 2 and 3, PDI Program, Ferritic and Austenitic Weld Ultrasonic Examination Coverage
4.	Approved	B-B B-D	Regenerative Heat Exchanger (RHE), Class 1 Examinations.
5.	Approved	N/A	Alloy 690 Weld Material, Fabrication of New Steam Generators.
6.	Approved	B-D	Regenerative Heat Exchanger (RHE), Inner Radius Examinations.
7.	Approved	C-C	Component Support Integral Attachment Examination Limitations.
8.	Approved	B-F	Surface Examination limitations associated with weld examinations of identified Class 1 safe end nozzles associated with the Reactor Pressure Vessel.
9.	Approved	E-D	Visual Examination of metal containment seals & gaskets.
10.	Approved	E-C	Successive Examinations to repaired areas.

TABLE 1
SUMMARY OF RELIEF REQUESTS

Relief Request Number	NRC Status	Code Category	Relief Request Subject
11.	Approved	E-G	Bolt torque or tension test for bolted connections.
12.	Approved	N/A	VT-2 Visual Examination following repair, replacement, or modification.
13.	Approved	N/A	Minimum illumination and maximum direct examination distance of Class CC components.
14.	Approved	B-A B-D	Reactor Pressure Vessel (RPV) Weld Examination Limitations.
15	Approved	C-B	Residual Heat Removal (RHR) Heat Exchanger Outlet Nozzle Weld Examination Limitation.
16.	Approved	C-C	Residual Heat Removal (RHR) Heat Exchanger Integral Attachment Weld Examination Limitation.
17.	Approved	B-F	Appendix VIII, Supplement 10, PDI Program Alternative Requirements.
35.	Withdrawn	N/A	ASME Section XI Alternative for the Fourth Interval ISI Program.

APPROVED
RELIEF REQUEST NO. 1
(Was previously approved as Relief Request No. 1 for Third Interval)
DEFER RPV EXAMINATIONS TO END OF INTERVAL

I. System/Component for Which Relief is Requested:

Relief is requested for the Reactor Pressure Vessel (RPV) Shell-to-Flange and Head-to-Flange Welds.

II Code Requirement

ASME Section XI, 1995 Edition 1996 Addenda, Category B-A, Item Numbers B1.30 and B1.40.

III. Code Requirement from Which Relief is Requested:

Table IWB-2500-1, Examination Category B-A, Item Number B1.30, requires that the RPV Shell-to-Flange weld be examined during the first and third periods in conjunction with the nozzle examinations, with at least 50 percent examined during the first period and the remainder by the end of the third period. The required Shell-to-Flange examination is impractical if performed during the periods specified as it can only be accomplished from the flange surface. When performing this weld examination from the Vessel inside surface, qualified UT techniques can be utilized to perform a more reliable examination with greater examination coverage as demonstrated during our 1999 10-Year Vessel examination.

Table IWB-2500-1, Examination Category B-A, Item Number B1.40, requires that the RPV Head-to-Flange weld be examined from the flange face only during the first and second periods, provided that these same portions are examined from the head during the third period.

IV. Basis for Relief:

The Reactor Pressure Vessel is a major source of radiation exposure accumulated during a normal refueling outage Inservice inspection. By performing the above Category and Item examinations at the end of the interval there will be no sacrifice in the quantity nor quality of examinations but, there will be a substantial reduction in radiation exposure.

RELIEF REQUEST NO. 1 (Con't)

V. Alternate Examinations:

R.E. Ginna Nuclear Power Plant proposes that the examinations identified above be performed from both the flange surface and the vessel wall at or near the end of interval.

VI. Justification for Granting of Relief

During the first three inspections intervals, 100 percent of the accessible length of the RPV welds including the Shell-to-Flange welds were examined at or near the end of the interval when the entire examination could be performed from both the flange surface and the vessel wall. This is a more practical approach in that the required examinations from both surfaces can be performed at the same time. During the fourth interval, 100 percent of the accessible length of all RPV welds including the shell-to-flange and head-to-flange welds will be performed at or near the end of the interval when all the required examinations can be performed at the same time. Also, Class 1 Leakage examinations are performed each outage to ensure system/component integrity.

VII. Implementation Schedule:

Implementation shall be performed for the Fourth Interval.

WITHDRAWN
RELIEF REQUEST NO. 2
VISUAL INTERNAL EXAMINATION OF CLASS 1 VALVES

(Was previously approved as Relief Request No. 5 for Third Interval)

I. System/Components for Which Relief is Requested:

Class 1 valves requiring valve body internal VT examination.

Size (In.)	Valve No.	MFG/Type	Line No.
10	842A	Darling/Check	10A-SI2-1502-A
10	842B	Darling/Check	10A-SI2-2501-B
10	867A	Darling/Check	10A-SI2-2501-A
10	867B	Darling/Check	10A-SI2-2501-B
10	700	Velan/Gate	10A-RC02501-A
10	701	Velan/Gate	10A-RC0-2501-A
10	720	Velan/Gate	10A-RC0-2501-B
10	721	Velan/Gate	10A-RC0-2501-B
6	853A	Velan/Check	6A-RC-2501-A
6	853B	Velan/Check	6A-RC-2501-B
6	852A	Velan/Gate	6A-RC-2501-A
6	852B	Velan/Gate	6A-RC-2501-B

II. Code Requirements:

ASME Section XI, 1995 Edition 1996 Addenda, Category B-M-2, Item Number B12.50.

III. Code Requirement from Which Relief is Requested

Table IWB-2500-1, Examination Category B-M-2 Item B12.50, requires an internal VT-3 examination on at least one valve within each group of valves that are of the same size, constructional design (such as globe, gate or check valves) and manufacturing method, that perform similar functions in the system. This relief request is based on the following points:

1. To complete the subject examination, unnecessary expenditures of man-hours and manrem are required with essentially no compensating increase in plant safety,

   and

2. The structural integrity afforded by valve casing material utilized will not significantly degrade over the lifetime of the valve.

RELIEF REQUEST NO. 2 (Con't)

III (Con't)

Based on data compiled from a plant similar in age and design to Ginna Station, it is expected that approximately 100 man-hours and 5 manrem exposure would be required to disassemble, inspect, and reassemble these valves. Performing this visual examination under such adverse conditions, high doses rate (30-40 R/hr), and poor + as-cast surface conditions, realistically provides little additional information as to the valve's casing integrity. The valves' material, a high-strength cast stainless steel (ASTM A351-CF8), is widely used in the nuclear industry and has performed extremely well. The presence of some delta ferrite (typically 5% or more) substantially increases resistance to intergranular stress corrosion cracking. The delta ferrite also helps the material to resist pitting and corrosion in chloride containing environments.

IV. Basis for Relief:

RG&E feels that adequate safety margins are inherent in the basic valve design and that the public's health and safety will not be adversely affected by not performing a visual examination of the valve internal pressure boundary surfaces. Additionally, this visual examination adds little or no value to the overall safety of the plant and subjects plant personnel to unnecessary radiation exposure. Therefore, a request for relief from this requirement is sought. A VT-3 examination shall be performed once on one valve within the valve group during the Interval if disassembled for maintenance.

V. Proposed Alternative Examinations:

As stated above RG&E does not believe that the visual examination required each ten-year interval is warranted. However, as standard maintenance practice dictates, when these valves are disassembled for maintenance purposes, a visual examination of the internals and internal pressure boundary surfaces will be performed, to the extent practical.

VI. Justification for Granting of Relief:

RG&E feels that adequate safety margins are inherent in the basic valve design and that the public's health and safety will not be adversely affected by not performing a visual examination of the valve internal pressure boundary surfaces. Additionally, this visual examination adds little or no value to the overall safety of the plant and subjects plant personnel to unnecessary radiation exposure. Also, Class 1 Leakage examinations are performed each outage to ensure system/component integrity.

RELIEF REQUEST NO. 2 (Con't)

VII. Implementation Schedule:

Implementation shall be performed for the Fourth Interval.

OPEN
RELIEF REQUEST NO. 3 Revision 1
APPENDIX VIII, SUPPLEMENT 2 and 3, PDI PROGRAM, FERRITIC and AUSTENITIC WELD ULTRASONIC EXAMINATION COVERAGE

1. ASME Code Components Affected:

Appendix VIII, Supplement 2 PDI Welds

Category #	Item #		
B-J	B9.11		
Summary #	**ID**	**Description**	**% Coverage**
I 035900	H	Pipe-to-Valve 867B	50%
I 036200	J	Valve 852B-to-Pipe	50%
I 034300	H	Pipe-to-Valve 867A	50%
I 013500	PL-FW-XV	Elbow-to-Pump "B"	50%
I 012100	PL-FW-VI	Pump "A"-to-Pipe	50%
I 012000	PL-FW-XIII	Elbow-to-Pump "A"	50%
I 013600	PL-FW-VIII	Pump "B"-to-Pipe	50%
I 028900	A	Valve 720-to-Pipe	50%
I 029400	B	Pipe-to-Valve 721	50%
I 030700	C	Valve 700-to-Pipe	50%

Category #	Item #		
B-J	B9.31		
Summary #	**ID**	**Description**	**% Coverage**
I 011000	PL-FW-II	10" Branch Weld	50%

Category #	Item #		
C-F-1	C5.21		
Summary #	**ID**	**Description**	**% Coverage**
I 163570	8	Valve 888B-to-Pipe	50%
I 163230	15	Pipe-to-Valve 870B	50%
I 163220	14	Valve 871B-to-Pipe	50%
I 164300	56	Flange (FE-125)-to-Pipe	50%
I 163070	6	Pipe-to-Valve 870A	50%

Appendix VIII, Supplement 3 PDI Welds

Category #	Item #		
C-F-2	C5.51		
Summary #	**ID**	**Description**	**% Coverage**
I 094600	M	Pipe-to-Valve 3994	75%
I 083900	G2-BC-2A	Pipe-to-Valve 3507	75%
I 090400	L2-BC-2A	Pipe-to-Valve 3506	75%

RELIEF REQUEST NO. 3 Rev. 1 (Con't)

2. **Applicable Code Edition and Addenda:**

ASME Section XI, 1995 Edition, 1996 Addenda.
Category B-J, Item Number B9.11.
Category B-J, Item Number B9.31.
Category C-F-1, Item Number C5.21.
Category C-F-2, Item Number C5.51.

Code Case N-460 specifies that a reduction in examination coverage on any Class 1 or Class 2 weld may be accepted provided the reduction in coverage for that weld is less than 10%.

10 CFR 50.55a(b)(2)(xv)(A), requires the following examination coverage when applying Supplement 2 or 3 to Appendix VIII:

(1) Piping must be examined in two axial directions and when examination in the circumferential direction is required, the circumferential examination must be performed in two directions, provided access is available.

(2) Where examination from both sides is not possible, full coverage credit may be claimed from a single side for ferritic welds. Where examination from both sides is not possible on austenitic welds, full coverage credit from a single side may be claimed only after completing a successful single sided Appendix VIII demonstration using flaws on the opposite side of the weld.

(3) 10 CFR 50.55a(b)(2)(xvi)(B), requires that examinations performed from one side of a ferritic or stainless steel pipe weld must be conducted with equipment, procedures, and personnel that have demonstrated proficiency with single side examinations. To demonstrate equivalency to two sided examinations, the demonstration must be performed to the requirements of Appendix VIII as modified by this paragraph and 10 CFR 50.55a(b)(2)(xv)(A).

RELIEF REQUEST NO. 3 Rev. 1 (Con't)

3. Applicable Code Requirements:

1. Category B-J within Table IWB-2500-1, Category C-F-1 and C-F-2 within Table IWC-2500-1, specifies volumetric examination requirements that are to be performed on welds at Terminal Ends, as well as other circumferential welds associated in the system.

2. Code Case N-460 specifies that a reduction in examination coverage on any Class 1 or Class 2 weld may be accepted provided the reduction in coverage for that weld is less than 10%.

3. Components with single side access, subject to ultrasonic examination with Supplement 2 and 3 of Appendix VIII to the1995 Edition with the 1996 Addenda of ASME Section XI.

4. Impracticality of Compliance:

The Final Rule requires that if access is available, the weld shall be scanned in each of the four directions (parallel and perpendicular to the weld) where required. Coverage credit may be taken for single side exams on ferritic piping. In accordance with Performance Demonstration Initiative procedure PDI-UT-1, Titled "Generic Procedure for the Ultrasonic Examination of Ferritic Pipe Welds", this procedure is not qualified for detection of axially oriented flaws on the far side of single side configurations or length sizing of axially oriented flaws regardless of location. However, for austenitic piping, a procedure must be qualified with flaws on the inaccessible side of the weld. There are currently no qualified single side examination procedures that demonstrate equivalency to two-sided examination procedures on austenitic piping welds. Current technology is not capable of reliably detecting or sizing flaws on the far side of an austenitic weld for configurations common to US nuclear applications.

The PDI Program conforms with the Final Rule regarding single side access for piping. PDI Performance Demonstration Qualification Summary (PDQS) certifies for austenitic piping list the limitation that single side examination is performed on a best effort basis. The best effort qualification is provided in place of a complete single side qualification to demonstrate that the examiners qualification and the subsequent weld examination are based on application of the best available technology.

RELIEF REQUEST NO. 3 Rev. 1 (Con't)

Impracticality of Compliance: (Con't)

When the examination area is limited to a one side of an austenitic or ferritic weld, as defined within Section II above, examination coverage does not comply with 10CFR50.55a(b)(2)(xv)(A) and proficiency demonstrations do not comply with 10 CFR 50.55a(b)(2)(xvi)(B) and full coverage credit may not be claimed.

Due to PDI Supplement 2 and 3 single side coverage limitations, ultrasonic examination coverage to the extent specified within Code Case N-460 can not be achieved.

Radiography, if applied, is not expected to provide any meaningful increase in benefit beyond the alternative presented.

5. **Burden Caused by Compliance:**

None.

6. **Proposed Alternative and Basis for Use:**

None. Applicable Code required volumetric examination (UT) will be performed to the maximum extent practical to the requirements of PDI, Appendix VIII, Supplement 2 and 3. We will continue to evaluate new emerging inspection technology as they become available. The Code required surface examinations and system leakage tests will be performed.

Full Volumetric examination coverage can not be achieved due to geometry and material attenuation variables to the extent specified within Code Case N-460. Radiography, if applied, is not expected to provide any meaningful increase in benefit.

Ultrasonic Examination of identified welds were/will be performed to the latest techniques, procedures and personnel qualified to the requirements of the Performance Demonstration Initiative (PDI) Program, in accordance with the requirements of the 1995 Edition, 1996 Addenda of ASME Section XI, Division 1, Appendix VIII as mandated by 10 CFR 50.55a (g)(4).

RELIEF REQUEST NO. 3 Rev. 1 (Con't)

Proposed Alternative and Basis for Use: (Con't)

Piping weld Ultrasonic Examination were/will be performed on accessible areas, to the maximum extent practical, due to configuration and material limitations. Credit for one-sided austenitic examinations as mandated within 10 CFR 50.55a (a)(b)(2)(xv)(2) which states in part, "Where examination from both sides is not possible on austenitic welds, full coverage credit from a single side may be claimed only after completing a successful single sided Appendix VIII demonstration using flaw on the opposite side of the weld...". Additionally, there is no Appendix VIII Program for cast austenitic piping welds; therefore, only 50 percent coverage can be claimed.

In accordance with Performance Demonstration Initiative procedure PDI-UT-1, Titled "Generic Procedure for the Ultrasonic Examination of Ferritic Pipe Welds", this procedure is not qualified for detection of axially oriented flaws on the far side of single side configurations or length sizing of axially oriented flaws regardless of location, therefore , only 75 percent coverage can be claimed.

The performance of Ultrasonic examination to the maximum extent practical provides an acceptable level of quality and safety. The data obtained from the examined volume provides sufficient information to judge the overall integrity of the piping weld.

Therefore, pursuant to 10 CFR 50.55a (g)(5)(iii), R. E. Ginna Nuclear Power Plant requests that relief be granted.

7. **Duration of Proposed Alternative:**

Implementation shall be performed for the Fourth Interval Program.

8. **Precedents:**

Per NRC letter dated September 28, 2000, from Marsha K. Gamberoni to Dr. Robert C. Mecredy, the NRC granted R. E. Ginna Nuclear power Plant Relief Request 1 through 8, 14 and 15, from the Code requirements for the Fourth 10-Year Interval Inservice Inspection Program. NRC letter TAC NOS MA6821, MA6822, and MA8058.

APPROVED
RELIEF REQUEST NO. 4
(Was previously approved as Relief Request no. 18-1 for Third Interval)
REGENERATIVE HEAT EXCHANGER (RHE), CLASS 1 EXAMINATIONS

I. System/Component for Which Relief is Requested:

Chemical and Volume Control System; Regenerative Heat Exchanger (RHE), Class 1 portion.

II. Code Requirements:

ASME section XI, 1995 Edition, 1996 Addenda, Category B-B, Item Numbers B2.60, B2.80, and Category B-D, Item Numbers B3.150

III. Code Requirements from Which Relief is Requested:

In accordance with Table IWB-2500-1, the following Categories and Item Numbers require volumetric examination.

Category	Item Number	
B-B	B2.60	Tubesheet-to-Head Welds
B-B	B2.80	Tubesheet-to-Shell Welds
B-D	B3.150	Nozzle-to-Vessel Welds

IV. Basis for Relief:

The Regenerative Heat Exchanger (RHE) consists of three (3) shell and tube heat exchangers connected in series. The RHE is designed to recover heat from the reactor coolant system letdown stream during normal operation. The letdown stream flows through the shell side of the heat exchanger. The shell side of the RHE is Class 1 while the tube side is Class 2.

The Regenerative Heat Exchanger provides the major single source of radiation exposure accumulated during a normal refueling outage Inservice inspection. By performing the above Category and Item number examinations on one of the three heat exchangers seeing the most extreme conditions will provide a representative sample, while limiting personnel radiation exposure.

RELIEF REQUEST NO. 4 (Con't)

IV (Con't)

For the above Categories & Item Numbers, the bottom heat exchanger should be the one heat exchanger selected since it operates at the highest temperature of all the units and is therefore the most highly stressed. Typical operating temperatures for letdown flow is around 544 Deg. F. and between 300-350 Deg. F. out of the top shell. By limiting the examinations to one heat exchanger will significantly reduce radiation exposure to personnel. The exposure savings to ISI related personnel per inspection interval would be 19.6 Man-Rem Whole Body and 68.0 Man-Rem Extremities through the reduction of 10 examinations.

V. Alternate Examinations:

Rochester Gas & Electric (RG&E) proposes to utilize the "multiple stream" concept when performing a volumetric examination of accessible portions of Nozzle-to-Vessel Welds and Nozzle Inside Radius Welds equivalent to one of the three identical sections on the Class 1 Regenerative Heat Exchanger. Examinations shall be performed on the lower section. The associated examinations shall be performed once during the interval. In addition, RG&E proposes to perform a VT-2 visual examination on the entire Regenerative Heat Exchanger during system leakage tests.

VI. Justification for Granting Relief:

The RHE consist of three (3) shell and tube heat exchangers connected in series. The bottom heat exchanger operates at a higher temperature of all the units and is the most highly stressed. By limiting the examinations to one heat exchanger will significantly reduce radiation exposure to personnel.

VII. Implementation Schedule:

Implementation shall be performed for the Fourth Interval.

APPROVED
RELIEF REQUEST NO. 5
(Was previously approved as Relief Request No. 27 for Third Interval)
ALLOY 690 WELD MATERIAL, FABRICATION OF NEW STEAM GENERATORS

I. System/Components for Which Relief is Requested:

For the incorporation of Code Cases 2142 and 2143 into the ASME Section XI Program. These Cases allow the use of Alloy 690 weld material.

II. Code Requirements:

ASME Section XI, 1995 Edition with 1996 Addenda, IWA-4224 Requirements.

III. ASME Requirements from which Relief is Requested:

Relief is requested from the requirements specified in IWA-4224 of the 1995 Edition, with 1996 Addenda of the ASME Section XI Code.

IWA-4224.3 Use of a Different Material

(a) Use of materials of a specification, grade, type, class, or alloy, and heat-treated condition, other than that originally specified, shall be evaluated for suitability for the specified design and operating conditions in accordance with IWA-4311.

(b) Material examination and testing requirements shall be reconciled to the Construction Code requirements of the component.

IV. Basis for Relief:

The use of Alloy 690 type weld filler material is required for the replacement steam generators. These materials have been approved by ASME through Code Cases 2142 and 2143 and are designated as UNS N06052 and UNS W86152, respectively, and classified them as F-No. 43 for weld procedure and performance qualification purposes in accordance with ASME Section XI.

RELIEF REQUEST NO. 5 (Con't)

IV (Con't)

UNS W86152 is the shielded metal arc welding electrode for Alloy 690 and UNS N06052 is the bare filler metal. Both materials have been shown in numerous EPRI studies to have improved corrosion resistance for Alloy 690 weldments as compared to the currently used Ni-Cr-Fe(N06082 and W86182) materials. The new weld materials are the preferred choice for welding applications involving Alloy 690 in a corrosion environment and they provide an acceptable level of quality and safety because of their superior corrosion resistant properties.

V. Alternate Examinations:

Incorporate ASME, Boiler & Pressure Vessel Code Case 2142, "F-Number Grouping for Ni-Cr-Fe, Classification UNS N06052 Filler Metal", and Case 2143, "F-Number Grouping for Ni-Cr-Fe, Classification UNS W86152 Welding Electrode".

VI. Justification for Granting of Relief:

Both UNS W86152 and UNS N06052 materials have been shown in numerous EPRI studies to have improved corrosion resistance for Alloy 690 weldments as compared to the currently used Ni-Cr-Fe (N06082 and N86182) materials. The new weld materials are the preferred choice for welding applications involving Alloy 690 that was utilized in Fabricating the new Steam Generators.

VII. Implementation Schedule:

Utilization of these materials may be used during the Fourth Interval if and when needed.

APPROVED
RELIEF REQUEST NO. 6
(Was previously approved as Relief Request no. 32 for Third Interval)
REGENERATIVE HEAT EXCHANGER (RHE), INNER RADIUS EXAMINATIONS

I. System/Components for Which Relief is Requested:

Chemical and Volume Control System; Regenerative Heat Exchanger (RHE), Class 1 Inner Radius Examinations;

RHE-N1
RHE-N5

II. Code Requirements:

ASME Section XI, 1995 Edition with 1996 Addenda, Category B-D, Item Number B3.160.

III. Code Requirements from Which Relief is Requested:

In accordance with Table IWB-2500-1, Examination Category B-D, Item Number B3.160.

IV. Basis for Relief:

The Regenerative Heat Exchanger (RHE) consists of three (3) shell and tube heat exchangers connected in series. The RHE is designed to recover heat from the reactor coolant system letdown stream during normal operation. The letdown stream flows through the shell side of the heat exchanger. The shell side of the RHE is Class 1 while the tube side is Class 2.

The RHE provides the major single source of radiation exposure accumulated during a normal refueling outage Inservice inspection. Inner Radius examinations were scheduled to be performed on the Class 1 side of the bottom heat exchanger that experience the most extreme conditions as specified within Relief Request #4.

RELIEF REQUEST NO. 6 (Con't)

IV (Con't)

The RHE inner radius examinations were to be performed on small heavy wall nozzles that are connected to 2" piping. An in-depth investigation was initiated by RG&E to determine the feasibility of performing an acceptable Code examination. The initial investigation reviewed the nozzle type, weld placement and actual OD weld profiles as well as ultrasonic measurements to verify ID configuration.

To assist in the evaluation of performing an acceptable Code ultrasonic inner radius examination, Computer Modeling and mockups of the nozzle to vessel configuration were initiated. Computer modeling was performed by Southwest Research Institute, AEA Technology, and EPRI.

Computer modeling performed by the various organizations compared favorably. The computer modeling initiative indicated several different transducers would be required to be used and the inner radius examination results would be questionable at best due to the size and configuration of the nozzles. The modeling also indicated beam spread and mode conversion at the notches and neighboring surfaces would seriously reduce the signal to noise ratios, causing confusing spurious signals.

Based upon the computer modeling results, EPRI NDE Center personnel were utilized to perform actual hands on inner radius examination evaluation on the mockups. An area was selected on two mockups of the nozzle, suitable transducers and wedges were selected to perform the examination. The inspection was to be performed from the boss region of the nozzle because inspection from the shell surface proved to be greatly affected by attenuation and scattering from the nozzle-to-shell weld material. A variety of inspection frequencies were attempted of which none provided what would be considered successful for the detection of the notches on these nozzles. It should be noted that the transducer position for detecting the selected notch was nearly optimum. Since the attempts made were unsuccessful it was decided to increase the depth of the notch from 10% to 30%. This increase of the notch is greater than code allowable. Attempts were made on the greater notch depth but detection was not achievable.

V. Alternate Examinations:

None. RG&E will continue to evaluate new emerging inspection technology as they become available. The Code required leakage tests with associated VT-2 examinations shall be performed.

RELIEF REQUEST NO. 6 (Con't)

VI. Justification for Granting of Relief:

It has been proven that an acceptable Code examination of the RHE nozzle inner radius region is not possible utilizing current technology. It demonstrates that signals from different depth notches located in the most optimum position of the mock-up could not be differentiated from noise and geometric reflectors without the aid of finger damping on the ID surface. The evaluations have also shown that the limitation in the boss area, in the 0 and 180 degree position, along with the transition to these areas, limits the size of transducers that can be employed and where the transducers can be placed.

VII. Implementation Schedule:

Implementation shall be performed for the Fourth Interval.

References:

1. EPRI Report Title " Evaluation of Ultrasonic Examination Technology for Inspection of Regenerative Heat Exchanger Nozzles at the Rochester Gas & Electric, Ginna Nuclear Plant" Dated 17 April 1996 by Douglas E. MacDonald and E. Kim Kietzman.

2. AEA Reactor Services Report Title "Report on the Mathematical Modeling of Two Nozzle Specimens for Rochester Gas & Electric Corporation" Dated 16 November 1992 by P. D. Birchall and L. N. J. Poulter.

APPROVED
RELIEF REQUEST NO. 7

(Was previously approved as Relief Request No. 34 for Third Interval)

COMPONENT SUPPORT INTEGRAL ATTACHMENT EXAMINATION LIMITATIONS

I. System/Component(s) for which Relief is Requested:

This Relief Request is requested for three (3) supports. Inspections of these supports is addressed by Class 2, Category C-C, Item Number C3.20, Identified Component Support Integral Attachments Surface Examinations.

Support Number	Coverage Obtained	System
MSU-33	50%	Mainsteam (MS)
MSU-34	50%	Mainsteam (MS)
Penetration 140	82%	Residual Heat Removal (RHR)

II. Code Requirement:

ASME Section XI Code, 1995 Edition, 1996 Addenda, requires essentially 100% of the weld length to obtain code coverage. ASME Section XI Code Case N-460 states that if the entire examination volume or area cannot be examined due to interference by another component or part geometry, a reduction in coverage is acceptable provided that the coverage (the lack of) is less than 10%.

III. Code Requirement from which Relief is Requested:

Relief is requested from examining 100% of the length for these 3 supports. Examining 100% of the weld length would be impractical, because the support would have to be redesigned or replaced to enable inspection. The amount of coverage is estimated at 50% for MSU-33, 50% for MSU-34, and 82% for Penetration 140.

RELIEF REQUEST NO. 7 (Con't)

IV. Basis for Relief:

Relief is requested pursuant to the provisions of 10 CFR 50.55a(g)(5)(iii), the required examination coverage for the identified items are impractical and would require redesign to allow examination or to be replaced to enable inspection.

R.E. Ginna Nuclear Power Plant was designed and constructed to the B31.1, 1955 edition construction code. This code did not contain requirements to ensure that items be accessible for future examinations. The above noted integral attachments associated with the component supports or penetration anchor supports were installed utilizing this construction code which did not provide for accessibility for future ISI NDE. Due to the limited design accessibility, ISI examinations cannot be performed on the inaccessible welds.

The two Main Steam supports (MSU-33 and MSU-34) are similar in design in that have a complex gusset assembly that is welded to the process piping (integral attachment) and welded to the base plate which is secured to the concrete floor. Due to the small size of gussets, access is limited for both the surface examination and surface preparation of the integral attachment welds located under the process piping. The achievable access percentage has been identified above within this relief request.

The penetration support assembly for Penetration 140 consist of a guard pipe that is secured to the Containment concrete and to the steel liner. The process pipe runs through the guard pipe and has an end plate welded to the process pipe (integral attachment) and welded to the guard pipe. Over the end plate, a segmented strong back reinforcement plate is welded on the end plate and guard pipe. The integral attachment weld is exposed on the process piping side, but the segmented strong back reinforcement plate partially covers the integral attachment weld/heat affected zone towards the end plate side. Due to this reinforcement plate covering the integral attachment partially on the end plate side, accessible coverage is limited as identified above within this relief request.

The identified component supports (including the integral attachments) are periodically visually examined (VT-3). ASME Section XI periodic leakage examinations are performed as well as Operator walkdowns as specified by Plant Operating Procedures. These operator walkdowns, periodic system leakage examinations and component support visual examinations provide additional assurances in maintaining plant safety.

RELIEF REQUEST NO. 7 (Con't)

V. Alternate Examinations:

R.E. Ginna Nuclear Power Plant proposes that the surface examination coverage identified above be acceptable in meeting Code Requirements and is not conducive in obtaining the requirements specified within Code Case N-460.

VI. Justification for the Granting of Relief:

R.E. Ginna Nuclear Power Plant was designed and constructed to the B31.1, 1955 edition construction code. This code did not contain requirements to ensure that items be made accessible for future NDE examinations. Due to the original limited design accessibility, ISI examination coverage cannot be obtained to the extent required by the current ASME Code.

ASME Section XI leakage examinations are performed as well as Operator walkdowns as specified by Plant Operating Procedures. These operator walkdowns, periodic system leakage examinations and component support visual examinations provide additional assurances in maintaining plant safety. The identified examination coverage for these items should be acceptable in fulfilling ASME Section XI coverage requirements.

VII. Implementation Schedule:

Implementation shall be performed for the Fourth Interval.

APPROVED
RELIEF REQUEST NO. 8
(Was previously approved as Relief Request No. 36 for Third Interval)
REACTOR PRESSURE VESSEL NOZZLE-to-SAFE END BUTT WELD SURFACE EXAMINATION LIMITATIONS

I. System/Component(s) for which Relief is Requested:

This Relief Request is requested for six (6) Reactor Pressure Vessel Nozzle-to-Safe End Butt Welds. Inspection of these welds is addressed under Class 1, Category B-F, Item Number B5.10, Nozzle-to-Safe End Weld Surface Examinations as identified below.

Weld ID #	ISI Summary #	Coverage Obtained
PL-FW-II	002100	62%
PL-FW-V	002400	75%
PL-FW-IV	002700	68.5%
PL-FW-VII	003000	72%
AC-1003-1	003300	0%(*)
AC-1002-1	003600	0%(*)

Note: (*) = welds embedded in concrete.

II. Code Requirement:

ASME Section XI Code, 1995 Edition, 1996 Addenda, Category B-F, Item Number B5.10, volumetric and surface examinations shall be performed with essentially 100% of the weld length to obtain code coverage. ASME Section XI Code Case N-460 states that if the entire examination volume or area cannot be examined due to interference by another component or part geometry, a reduction in coverage is acceptable provided that the (lack of) coverage is less than 10%. Previous Codes utilized did not include this 90% coverage requirement and examinations were performed to the extent obtainable.

RELIEF REQUEST NO. 8 (Con't)

III. Code Requirement from which Relief is Requested:

Relief is requested from the surface examination requirements for the six (6) identified welds. Surface Examination of the first four (4) welds is limited due to Original Construction Code interferences of the floor and wall in the "Sandbox" where these welds are located. The "Sandboxes" would have to be redesigned to enable the welds to be surface examined to obtain Code required coverage. (Volumetric examination of these welds is performed from the inside of the Vessel and is not a part of this Relief Request.)

Surface Examination of the last two welds is impractical. The concrete surrounding the Reactor Pressure Vessel has embedded these welds. The concrete wall around the Reactor Pressure Vessel would have to be redesigned or replaced to enable the two (2) welds to be inspected with a surface examination. (Volumetric examination of these welds is performed from the inside of the Vessel and is not a part of this Relief Request.)

IV. Basis for Relief:

Relief is requested pursuant to the provisions of 10 CFR 50.55a(g)(5)(iii), the required examination coverage for the identified welds is impractical and would require redesign or replacement to obtain Code required surface examination coverage.

R.E. Ginna Nuclear Power Plant was designed and constructed to the B31.1, 1955 edition Construction Code. This code did not contain requirements to ensure that items be accessible for future examinations. The above noted piping welds were installed utilizing this construction code, which did not provide for accessibility for future ISI NDE. Due to the limited design accessibility, ISI surface examination coverage is below Code percentage requirements as identified within this Relief Request.

The first four (4) welds of this Relief Request are located in a "Sandbox" configuration. Within the "Sandbox", the welds are against the floor and one wall. The angled wall is joined to the floor and is against the weld. The surface examination of these welds is limited due to Original Construction Code interferences of the floor and wall of the "Sandbox". The "Sandboxes" would have to be redesigned to enable the welds to be inspected to obtain Code required coverage for the surface examinations. The last two (2) welds of this Relief Request are embedded in concrete. This concrete structure is the wall that surrounds the Reactor Pressure Vessel.

RELIEF REQUEST NO. 8 (Con't)

IV (Con't)

ASME Section XI Class 1 system leakage examinations are performed. These leakage examinations demonstrate pressure boundary integrity and provide additional assurances in maintaining plant safety.

V. Alternate Examinations:

R.E. Ginna Nuclear Power Plant proposes that the surface examination coverage identified for the first four (4) welds above be acceptable in fulfilling the Code required examination coverage. The actual physical configuration of the "Sandboxes" is not conducive in obtaining the requirements specified within Code Case N-460 for acceptable coverage. Volumetric examination of these welds is performed from the inside of the Vessel, and will be performed during the 2009 outage.

For the last two (2) welds, the Code surface examination requirements are impractical and cannot be examined due to them being embedded in concrete. Volumetric examination of these welds is performed from the inside of the Vessel, and will be performed during the 2009 Outage.

VI. Justification for the Granting of Relief:

R.E. Ginna Nuclear Power Plant was designed and constructed to the B31.1, 1955 edition Construction Code. This code did not contain requirements to ensure that items be made accessible for future NDE examinations. Due to the original limited design accessibility or lack of design accessibility, ISI surface examination coverage can not be obtained to the extent required by the ASME Code. ASME Section XI Class 1 system leakage examinations are performed. These leakage examinations demonstrate pressure boundary integrity and provide additional assurances in maintaining plant safety. The identified examination coverage for these items should be acceptable in fulfilling ASME Section XI coverage requirements.

RELIEF REQUEST NO. 8 (Con't)

VII. Implementation Schedule:

The surface examinations will be performed during the end of the Fourth Interval on the first four (4) accessible welds. For the two (2) welds embedded in concrete, surface examinations can not be performed.

APPROVED
RELIEF REQUEST NO. 9
(Was Relief Request No. 37 for Third Interval)
CONTAINMENT INSPECTION SEALS AND GASKETS

I. System/Component(s) for which Relief is Requested:

Seals and gaskets of Class MC pressure retaining components and metallic liners of Class CC components, Examination Category E-D, Item Numbers E5.10 and E5.20 of IWE-2500, Table IWE-2500-1, ASME Section XI, 1992 Edition, 1992 Addenda. Several hundred seals and gaskets are affected by this relief request.

II. Code Requirement:

ASME Section XI Code, 1992 Edition, 1992 Addenda, IWE-2500, Table IWE-2500-1, Category E-D, Item Numbers E5.10 and E5.20 requires seals and gaskets on airlocks, hatches, and other devices to be visually examined, VT-3, once each interval to assure containment leak-tight integrity.

III. Code Requirement from which Relief is Requested:

Relief is requested from performing the Code-required visual examination, VT-3, on the above identified metal containment seals and gaskets.

IV. Basis for Relief:

10 CFR 50.55a was amended in the Federal Register (61 FR 41303) to require the use of the 1992 Edition, 1992 Addenda, of Section XI when performing containment examinations. The penetrations discussed below contain seals and gaskets.

RELIEF REQUEST NO. 9 (Con't)

A. Electrical Penetrations

Electrical penetrations use a header plate attached to a containment penetration nozzle flange with redundant O-rings between the header plate and flange face. Modules through which electrical conductors pass are installed in the header plate. One type, manufactured by Amphenol, uses seals and gaskets to assure leak tight integrity. A second type, manufactured by Conax, uses a set of compression fittings. Replacement modules for the Amphenol penetrations use a combination of O-rings and compression fittings. Each penetration is pressurized with dry nitrogen to maintain and monitor integrity and to prevent the intrusion of moisture into the penetration. These seals and gaskets cannot be inspected without disassembly of the penetration to gain access to the seals and gaskets.

B. Containment Personnel and Equipment Hatches

The Personnel and Equipment Hatches utilize an inner and outer door with gasket surfaces to ensure a leak tight integrity. These hatches also contain other gaskets and seals such as the handwheel shaft seals, electrical penetrations, blank flanges, and equalizing pressure connections which require disassembly to gain access to the gaskets and seals.

Seal and gasket joints receive a 10 CFR 50 Appendix J test. As noted in 10 CFR 50 Appendix J, the purpose of Type B tests is to measure leakage of containment or penetrations whose design incorporates resilient seals, gaskets, sealant compounds, and electrical penetrations fitted with flexible metal seal assemblies. Examination of seals and gaskets require the joints, which are proven adequate through Appendix J testing, be disassembled. For electrical penetrations, this would involve a pre-maintenance Appendix J test, de-termination of cables at electrical penetrations if enough cable slack is not available, disassembly of the joint, removal and examination of the seals and gaskets, reassembly of the joint, re-termination of the cables if necessary, post maintenance testing of the cables, and a post maintenance Appendix J test of the penetration. The work required for the Containment Hatches would be similar except for the de-termination, re-termination, and testing of cables. This imposes the risk that equipment could be damaged. The 1992 Edition, 1993 Addenda, of Section XI recognizes that disassembly of joints to perform these examinations is not warranted. Note 1 in Examination Category E-D was modified in the 1995 Edition of Section XI to state that seal or gasket connections need not be disassembled solely for performance of examinations. However, without disassembly, most of the surface of the seals and gaskets would be inaccessible.

RELIEF REQUEST NO. 9 (Con't)

IV (Con't)

For those penetrations that are routinely disassembled, a Type B test is required upon final assembly and prior to start-up. Since the Type B test will assure the leak tight integrity of primary containment, the performance of the visual examination would not provide an increase in the level of safety or quality.

Seals and gaskets are not part of the containment pressure boundary under current Code rules (NE-1220 (b)). The airlocks and hatches containing these materials are tested in accordance with 10 CFR 50, Appendix J. If increased leakage is identified during these Appendix J tests, the cause of leakage would be investigated. If increased leakage were due to degradation of the seal or gasket material, corrective measures would be applied and the component retested. Repair or replacement of seals and gaskets is not subject to Code (1992 Edition, 1992 Addenda) rules in accordance with Paragraph IWA-4111(b)(5) of ASME Section XI.

The visual examination of seals and gaskets in accordance with IWE-2500, Table IWE-2500-1 is a burden without any compensating increase in the level of safety or quality.

Relief is requested in accordance with 10 CFR 50.55a(a)(3)(ii). Compliance with the original requirements of this section would result in hardship or unusual difficulty without a compensating increase in the level of quality and safety. Testing the seal and gasket joints in accordance with 10 CFR 50, Appendix J will provide adequate assurance of the leak-tight integrity of the seals and gaskets.

RELIEF REQUEST NO. 9 (Con't)

V. Alternate Examinations:

The leak testing of seal and gasket joints will be in accordance with 10 CFR 50, Appendix J. No additional alternative examinations to the visual examination, VT-3, of the seals and gaskets will be performed.

VI. Justification for the Granting of Relief:

This Relief Request is similar to Relief Request E-1 submitted by Davis-Besse as one of the EPRI "Containment Inspection Program Guide" Pilot Plant Relief Requests. This Relief Request will minimize Ginna operating and maintenance cost without decreasing the level of quality and safety.

VII. Implementation Schedule:

Relief is requested for the first inspection interval for the IWE Containment Inspection Program (1996 - 2008). Note that this interval overlaps the Third and Fourth 10-Year Interval inspections of the Ginna Inservice Inspection Program.

APPROVED
RELIEF REQUEST NO. 10
(Was Relief Request No. 38 for Third Interval)
CONTAINMENT INSPECTION SUCCESSIVE EXAMINATIONS AFTER REPAIR

I. System/Component(s) for which Relief is Requested:

All Class MC, Paragraphs IWE-2420(b) and IWE-2420(c) successive examination requirements for components found acceptable for continued service.

II. Code Requirement:

Paragraphs IWE-2420(b) and IWE-2420(c) of the 1992 Edition, 1992 Addenda of ASME Section XI requires that when component examination results require evaluation of flaws, evaluation of areas of degradation, or repairs in accordance with Article IWE-3000, and the component is found to be acceptable for continued service, the areas containing such flaws, degradation, or repairs shall be reexamined during the next inspection period listed in the schedule of the inspection program of Paragraph IWE-2411 or Paragraph IWE-2412, in accordance with Table IWE-2500-1, Examination Category E-C.

III. Code Requirement from which Relief is Requested:

Relief is requested from the requirements of ASME Section XI Code, 1992 Edition, 1992 Addenda, Paragraphs IWE-2420(b) and IWE-2420(c) to perform successive examination on repairs.

IV. Basis for Relief:

10 CFR 50.55a was amended in the Federal Register (61 FR 41303) to require the use of the 1992 Edition, 1992 Addenda, of Section XI when performing containment examinations. The purpose of a repair is to restore the component to an acceptable condition for continued service in accordance with the acceptance standards of Article IWE-3000. Paragraph IWA-4150 requires the owner to conduct an evaluation of the suitability of the repair including consideration of the cause of failure.

RELIEF REQUEST NO. 10 (Con't)

IV (Con't)

If the repair has restored the component to an acceptable condition, it is overly conservative to require successive examinations. Other paragraphs of the ASME Code recognize this requirement as overly conservative. If the repair was not suitable, then the repair does not meet code requirements and the component is not acceptable for continued service. Neither Paragraph IWB-2420(b), Paragraph IWC-2420(b), nor Paragraph IWD-2420(b) requires a repair to be subject to successive examination requirements. Furthermore, if the repair area is subject to accelerated degradation, it would still require augmented examination in accordance with Table IWE-2500-1, Examination Category E-C. The successive examination of repairs in accordance with Paragraphs IWE-2420(b) and IWE-2420(c) constitutes a burden without a compensating increase in quality or safety.

In their resolution to public comment # 3.3, the NRC stated within SECY 96-080 dated April 17, 1996: "The purpose of IWE-2420(b) is to manage components found to be acceptable for continued service (meaning no repair or replacement at this time) as an Examination Category E-C component.. If the component had been repaired or replaced, then the more frequent examination would not be needed."

Relief is requested in accordance with 10 CFR 50.55a(a)(3) (ii). Compliance with the original requirements of this section would result in hardship or unusual difficulty without a compensating increase in the level of quality and safety.

The requirement to perform successive examinations following repairs has been removed in the 1997 Addenda of ASME Section XI. This addenda has been approved by the ASME Main Committee and has been published.

V. Alternate Examinations:

Successive examinations in accordance with Paragraphs IWE-2420(b) and IWE-2420(c) are not required for repairs made in accordance with Article IWA-4000.

RELIEF REQUEST NO. 10 (Con't)

VI. Justification for the Granting of Relief:

This Relief Request is similar to Relief Request E-6 submitted by Davis-Besse as one of the EPRI "Containment Inspection Program Guide" Pilot Plant Relief Requests. This Relief Request will minimize Ginna operating and maintenance cost without decreasing the level of quality and safety.

VII. Implementation Schedule:

Relief is requested for the first inspection interval for the IWE Containment Inspection Program (1996 - 2008). Note that this interval overlaps the Third and Fourth 10-Year Interval inspections of the Ginna Inservice Inspection Program.

APPROVED
RELIEF REQUEST NO. 11
(Was Relief Request No. 39 for Third Interval)
CONTAINMENT INSPECTION BOLT TORQUE OR TENSION TESTING

I. System/Component(s) for which Relief is Requested:

Class MC pressure retaining bolting.

II. Code Requirement:

ASME Section XI, 1992 Edition with the 1992 Addenda, Table IWE-2500-1, Examination Category E-G, Pressure Retaining Bolting, Item E8.20. Bolt torque or tension testing is required on bolted connections that have not been disassembled and reassembled during the inspection interval.

III. Code Requirement from which Relief is Requested:

Relief is requested from ASME Section XI 1992 Edition with the 1992 Addenda Table IWE-2500-1 Examination Category E-G, Pressure Retaining Bolting, Item E8.20. Bolt torque or tension testing is required on bolted connections that have not been disassembled and reassembled during the inspection interval.

IV. Basis for Relief:

10CFR50.55a was amended in the Federal Register (61 FR 41303) to require the use of the 1992 Edition, 1992 Addenda, of Section XI when performing containment examinations. Bolt torque or tension testing is required on bolted connections that have not been disassembled and reassembled during the inspection interval.

RELIEF REQUEST NO. 11 (Con't)

IV (Con't)

Determination of the torque or tension value would require that the bolting be un-torqued and then re-torqued or re-tensioned. The performance of the Type B test itself proves that the bolt torque or tension remains adequate to provide a leak rate that is within acceptable limits. The torque or tension value of bolting only becomes an issue if the leak rate is excessive. Once a bolt is torqued or tensioned, it is not subject to dynamic loading that could cause it to experience significant change.

Verification of torque or tension values on bolted joints that are proven adequate through Appendix J testing and visual inspection is adequate to demonstrate that design function is met. Torque or tension testing is not required on any other ASME Section XI, Class 1, 2, or 3 bolted connections or their supports as part of the Inservice inspection program. Also, all penetrations at R.E. Ginna Nuclear Power Plant are seated with pressure (not unseated).

Relief is requested in accordance with 10 CFR 50.55a(a)(3) (ii). Compliance with the original requirements of this section would result in hardship or unusual difficulty without a compensating increase in the level of quality and safety.

V. Alternate Examinations:

The following examinations and tests required by Subsection IWE ensure the structural integrity and the leak-tightness of Class MC pressure retaining bolting, and, therefore, no additional alternative examinations are proposed:

RELIEF REQUEST NO. 11 (Con't)

V (Con't)

(1) Exposed surfaces of bolted connections shall be visually examined in accordance with requirements of Table IWE-2500-1, Examination Category E-G, Pressure Retaining Bolting, Item No. E8.10, and

(2) Bolted connections shall meet the pressure test requirements of Table IWE-2500-1, Examination Category E-P, All Pressure Retaining Components, Item E9.40, and

(3) A general visual examination of the entire containment once each inspection period shall be conducted in accordance with 10 CFR 50.55a(b)(2)(x)(E).

VI. Justification for the Granting of Relief:

This Relief Request is similar to Relief Request E-7 submitted by Davis-Besse as one of the EPRI "Containment Inspection Program Guide" Pilot Plant Relief Requests. This Relief Request will minimize Ginna operating and maintenance cost without decreasing the level of quality and safety.

VII. Implementation Schedule:

Relief is requested for the first inspection interval for the IWE Containment Inspection Program (1996 - 2008). Note that this interval overlaps the Third and Fourth 10-Year Interval inspections of the Ginna Inservice Inspection Program.

APPROVED
RELIEF REQUEST NO. 12
(Was Relief Request No. 40 for Third Interval)
CONTAINMENT INSPECTION VT-2 AFTER REPAIR, REPLACEMENT OR MODIFICATION

I. System/Component(s) for which Relief is Requested:

All components subject to the rules and requirements for repair, replacement or modification of Class MC, IWE-5000 system pressure testing visual examination in accordance with the 1992 Edition, 1992 Addenda of ASME Section XI.

II. Code Requirement:

Paragraph IWE-5240 of the 1992 Edition, 1992 Addenda of ASME Section XI requires that the requirements of Paragraph IWA-5240 for visual examination, VT-2, are applicable following repair, replacement or modification.

III. Code Requirement from which Relief is Requested:

Relief is requested from performing the VT-2 visual examination in connection with system pressure testing following repair, replacement or modification under Article IWE-5000.

IV. Basis for Relief:

10 CFR 50.55a was amended in the Federal Register (61 FR 41303) to require the use of the 1992 Edition, 1992 Addenda, of Section XI when performing containment examinations. Paragraph IWE-5210 states that except as noted within Paragraph IWE-5240, the requirements of Article IWA-5000 are not applicable to Class MC or Class CC components.

RELIEF REQUEST NO. 12 (Con't)

IV (Con't)

Paragraph IWE-5240 states that the requirements of Paragraph IWA-5240 (corrected from IWA-5246 to IWA-5240 in the 1993 Addenda) for visual examinations are applicable. Paragraph IWA-5240 identifies a "VT-2" visual examination. VT-2 examinations are conducted to detect evidence of leakage from pressure-retaining components, with or without leakage collection systems, as required during the conduct of a system pressure test. In addition, personnel performing VT-2 examinations are required to be qualified in accordance with Subarticle IWA-2300 of ASME Section XI.

For repairs, replacements or modifications that are performed under ASME Section XI Code, applicable Construction Code (or Installation Code) non-destructive examinations (NDE) are performed and must meet the acceptance criteria of the Construction / Installation Code. In addition to the Construction Code NDE, applicable ASME Section XI NDE pre-service NDE are also performed. These Construction Code and Section XI pre-service NDE requirements provide additional assurances that the repairs, replacements or modifications are sound and leak-tight. Table IWE-2500-1, Examination Category E-P, identifies the examination method of 10 CFR 50, Appendix J and does not specifically identify a VT-2 visual examination. 10 CFR 50, Appendix J provides requirements for testing as well as acceptable leakage criteria. These tests are performed by Appendix J "Test" personnel and utilize calibrated equipment to determine acceptability. Additionally, 10 CFR 50.55a(b)(2)(x)(E) requires a general visual examination of the containment each period that would identify any structural degradation that may contribute to leakage. A "VT-2" visual examination will not provide additional assurance of safety beyond that of current Appendix J practices.

Relief is requested in accordance with 10 CFR 50.55a(a)(3)(i). The proposed alternative (pressure testing in accordance with 10 CFR 50, Appendix J) will provide an acceptable level of quality and safety.

The reference to paragraph IWA-5240 has been removed in the 1997 Addenda of ASME Section XI. This addenda has been approved by the ASME Main Committee and should be published in 1998.

RELIEF REQUEST NO. 12 (Con't)

V. Alternate Examinations:

Testing shall be conducted in accordance with 10 CFR 50, Appendix J, in lieu of Paragraph IWE-5240 of ASME Section XI, as well as performing an IWE detailed visual examination (VT-1) of the required or replaced area.

VI. Justification for the Granting of Relief:

For repairs, replacements or modifications that are performed under ASME Section XI Code, applicable Construction Code (or Installation Code) non-destructive examinations (NDE) are performed and must meet the acceptance criteria of the Construction / Installation Code. In addition to the Construction Code NDE, applicable ASME Section XI NDE pre-service NDE are also performed. These Construction Code and Section XI pre-service NDE requirements provide additional assurances that the repairs, replacements or modifications are sound and leak-tight. This Relief Request will minimize Ginna operating and maintenance cost without decreasing the level of quality and safety.

VII. Implementation Schedule:

Relief is requested for the first inspection interval for the IWE Containment Inspection Program (1996 - 2008). Note that this interval overlaps the Third and Fourth 10-Year Interval inspections of the Ginna Inservice Inspection Program.

APPROVED
RELIEF REQUEST NO. 13
(Was Relief Request No. 41 for Third Interval)
CONTAINMENT INSPECTION REMOTE VT OF CLASS CC

I. System/Component(s) for which Relief is Requested:

All components subject to the rules and requirements for Inservice Inspection of Class CC Concrete Components, Examination Category L-A, Concrete, Item L.1.11 as applicable to IWL-2310, Visual Examination and Personnel Qualification and IWA-2210, Visual Examinations.

II. Code Requirement:

ASME Section XI, 1992 Edition, 1992 Addenda, IWL-2310, Visual Examination and Personnel Qualification and IWA-2210, Visual Examinations requires specific minimum illumination and maximum direct examination distance for all concrete surfaces.

III. Code Requirement from which Relief is Requested:

Relief is requested from Paragraph IWA-2210, Visual Examination Requirements for minimum illumination and maximum direct examination distance of Class CC components under Paragraph IWL-2310.

RELIEF REQUEST NO. 13 (Con't)

IV. Basis for Relief:

10 CFR 50.55a was amended in the Federal Register (61 FR 41303) to require the use of the 1992 Edition, 1992 Addenda, of Section XI when performing containment examinations. In addition to the requirements of Subsection IWL, the Rulemaking also imposes the requirements of Subsection IWA of the 1992 Edition, 1992 Addendum, of ASME Section XI for minimum illumination and maximum direct examination distance of Class CC components, specifically for the examination of concrete under Paragraph IWL-2510. When remotely performing the visual examinations required by Subsection IWL Paragraph IWL-2510, the maximum direct examination distance specified in Table IWA-2210-1 may be extended, and the minimum illumination requirements specified in Table IWA-2210-1 may be decreased. IWA-2210 allows for remote examination as long as the remote examination procedure is demonstrated to resolve the selected test chart characters. The Registered Professional Engineer (RPE) will identify minimum size of indications of interest. For remote visual examination, the procedure and equipment to be used will be demonstrated capable of resolving these minimum indications to the satisfaction of the RPE and the Authorized Nuclear Insurance Inspector (ANII), as allowed in IWA-2240, "Alternative Examinations." The record of demonstration will be available to Regulatory Authorities.

RELIEF REQUEST NO. 13 (Con't)

IV (Con't)

Accessibility to higher portions of the dome and the containment building itself make it a hardship to obtain the maximum direct examination distance and

minimum illumination requirements. The installation of extensive temporary scaffold systems or a climbing scaffold system to access these portions of the containment would be necessary. These scaffolds would provide limited access due to containment geometry restrictions as well as structural and equipment interferences. The installation and removal of these scaffolds would increase both worker radiation exposure and personnel safety in order to meet Paragraph IWA-2210 requirements. The NRC staff received seven comments that were consolidated into Public Comment # 2.3 in Part III of Attachment 6A to SECY-96-080. The Staff response to these concerns is as follows: "Comments received from ASME members on the containment committees indicate that the newer, more stringent requirements of IWA-2210 were not intended to be used for the examination of containments and were inadvertently included in Subsection IWL. The NRC agrees that remote examinations are the only practical method for inspecting much of the containment surface area. 50.55a(b)(2)(x)(B) has been added to the final rule which contains alternative lighting and resolution requirements which may be used in lieu of the requirements contained in IWA-2210-1." However, as specified within 10CFR50.55a(b)(2)(x)(B) of the final rule, this alternative applies only to Subsection IWE, and not to Subsection IWL.

Relief is requested in accordance with 10 CFR 50.55a (a)(3) (ii). Compliance with the original requirements of this section would result in hardship or unusual difficulty without a compensating increase in the level of quality and safety.

V. Alternate Examinations:

When performing remotely the visual examinations required by Subsection IWL, Paragraph IWL-2510 , the maximum direct examination distance specified in Table IWA-2210-1 may be extended, and the minimum illumination requirements specified in Table IWA-2210-1 may be decreased provided that the conditions or indications for which the visual examination is performed can be detected at the chosen distance and illumination.

RELIEF REQUEST NO. 13 (Con't)

VI. Justification for the Granting of Relief:

This Relief Request is similar to Relief Request L-1 submitted by Calvert Cliffs as one of the EPRI "Containment Inspection Program Guide" Pilot Plant Relief Requests. Relief Request L-1 (for Calvert Cliffs) was subsequently approved by the NRC. Refer to a letter from the NRC (S. Bajwa) to Baltimore Gas and Electric (C. Cruse), dated November 16, 1998 (Docket No. 50-317/318). This Relief Request will minimize Ginna operating and maintenance cost without decreasing the level of quality and safety.

VII. Implementation Schedule:

Relief is requested for the first inspection interval for the IWL Containment Inspection Program (1996 - 2008). Note that this interval overlaps the Third and Fourth 10-Year Interval inspections of the Ginna Inservice Inspection Program.

APPROVED
RELIEF REQUEST NO. 14
(Was Relief Request No. 42 for Third Interval)
REACTOR PRESSURE VESSEL (RPV) WELD EXAMINATION LIMITATIONS

I. System/Component(s) for which Relief is Requested:

This Relief Request pertains to eight (8) Reactor Pressure Vessel welds or Inner Radius Volumetric examinations. Volumetric examination limitations of these eight welds are identified in Attachment Number 1.

II. Code Requirement:

When performing Volumetric examinations, ASME Section XI Code , 1995 Edition, 1996 Addenda, requires essentially 100% of the weld length or area to obtain coverage.

ASME Section XI Code Case N-460 states that if the entire examination volume or area cannot be examined due to interference by another component or part geometry, a reduction in coverage is acceptable provided that the coverage (the lack of) is less than 10%.

III. Requirement from which Relief is Requested:

Relief is requested from examining 100% of the weld length or areas for these eight (8) identified items. Examining 100% of the weld length or areas would be impractical due to original design interference. Attachment Number 1 identifies volumetric examination achievable coverage and associated limitations.

RELIEF REQUEST NO. 14 (Con't)

IV. Basis for Relief:

Relief is requested pursuant to the provisions of 10 CFR 50.55a (g)(5)(iii), the required examination coverage for the identified items are impractical and would require redesign to allow examination or to be replaced to enable inspection.

The Reactor Pressure Vessel (RPV) was designed and constructed to ASME Section III, 1965 Edition. This code did not contain requirements to ensure that items be accessible for future examinations. The eight (8) items identified within Attachment Number 1 were installed utilizing this construction code which did not provide for accessibility for future ISI NDE.

The Class 1 Reactor Pressure Vessel is part of the ASME Section XI VT-2 Leakage Examination boundary. Class 1 Leakage Examinations are performed each refueling outage as required by the Code to insure pressure boundary integrity. In addition to the ASME Section XI leakage examinations, Operator walkdowns as specified by Plant Operating Procedures are also performed. The combination of operator walkdowns and the Class 1 leakage examination that is performed each refueling outage provide additional assurances in maintaining plant safety.

V. Alternate Examinations:

R.E. Ginna Nuclear Power Plant proposes that the volumetric examination coverage identified within Attachment Number 1 be acceptable in fulfilling required Code volumetric examination coverage.

RELIEF REQUEST NO. 14 (Con't)

VI. Justification for the Granting of Relief:

The Reactor Pressure Vessel was designed and constructed to ASME Section III, 1965 Edition construction code. This code did not contain requirements to ensure that items be made accessible for future NDE examinations. Due to the original limited design accessibility, examination coverage can not be obtained to the extent required by the ASME Section XI Code.

ASME Section XI Class 1 leakage examinations are performed each outage as well as Operator walkdowns as specified by Plant Operating Procedures. These operator walkdowns and system leakage examinations provide additional assurances in maintaining plant safety. The identified volumetric examination coverage for these items should be acceptable in fulfilling coverage requirements.

Previous examinations were performed on these items in conformance to the Code requirements in effect for RG&E at those times.

VII. Implementation Schedule:

Implementation shall be performed at the end of the Fourth Interval.

RELIEF REQUEST NO. 14 (Con't)

Attachment Number 1

Category Number	Item Number	Sum. Number	Weld ID	Description/Requirement	%	Limitations
B-A	B1.30	000501 000502 000503	RPV-A	Vessel to Flange Circ. Weld Section XI Code Required	54%	Keyways & Irradiation Slots
B-A	B1.11	000300	RPV-D	Lower Shell to Ring Forging Circ. Weld. Section XI Code Required	81%	Guide Lugs & Incores
B-D	B3.90	001900	N1A	Nozzle Vessel WD 028D-30M. Section XI Code Required	55%[1] 70%[2]	Nozzle Boss
B-D	B3.90	002500	N1B	Nozzle Vessel WD 208D-30M. Section XI Code Required	55%[1] 70%[2]	Nozzle Boss
B-D	B3.100	002300	N2A -IRS	Nozzle Inside Radius Section. Section XI Code Required	90%	Inner Radius
B-D	B3.100	002900	N2B -IRS	Nozzle Inside Radius Section. Section XI Code Required	90%	Inner Radius
B-D	B3.90	003100	AC- 1003	Nozzle Vessel WD 108D-30M. Section XI Code Required	55%[1] 72%[2]	Nozzle Boss
B-D	B3.90	003400	AC- 1002	Nozzle Vessel WD 288D-30M. Section XI Code Required	55%[1] 72%[2]	Nozzle Boss

[1] Volumetric Weld Examination

[2] Volumetric Near Surface Examination

APPROVED
Request for Relief No. 15
(Was Relief Request No. 43 for Third Interval)
Residual Heat Removal (RHR) Heat Exchanger Outlet Nozzle Welds Examination Limitations

I. System/Component(s) for Which Relief is Requested:

This Relief Request pertains to two (2) Residual Heat Removal (RHR) Heat Exchanger Outlet Nozzle to Shell Welds, ASME Class 2, Category C-B, Item C2.32. There is one nozzle of this type associated with each of the two identical RHR Heat Exchangers. The Code requires that the examination be performed when the component is opened. Both Heat Exchangers were opened and Volumetrically examined. Limited coverage is identified below.

Summary #	Weld ID	Exam Coverage	Limitations
169253	ONSRHE-1B	79%	due to internal welded separation plate
169053	ONSRHE-1A	79%	due to internal welded separation plate

II. ASME Section XI Code Requirement:

ASME Section XI Code, 1995 Edition, 1996 Addenda, requires essentially 100% of the weld length or area to obtain coverage. ASME Section XI Code Case N-460 states that if the entire examination volume or area cannot be examined due to interference by another component or part geometry, a reduction in coverage is acceptable provided that the coverage (the lack of) is less than 10%.

Request for Relief No. 15 (Con't)

III. Requirement from Which Relief is Requested:

Relief is requested from examining 100% of the weld length or areas for these two (2) identified items. Examining 100% of the weld length or areas would be impractical due to original design interference.

IV. Basis for Relief:

Relief is requested pursuant to the provisions of 10 CFR 50.55a(g)(5)(iii), the required examination coverage for the identified items are impractical and would require redesign to allow examination or to be replaced to enable inspection.

The two identical Residual Heat Removal (RHR) Heat Exchangers was designed and constructed to ASME Section VIII, 1965 Edition. This code did not contain requirements to ensure that items be accessible for future examinations. The two (2) ASME Class 2 items identified above were installed utilizing this construction code which did not provide for accessibility for future ISI NDE. The ISI ASME Section XI volumetric requirement is identified within Table IWC-2500-1, Category C-B, Item Number C2.32.

The Residual Heat Removal (RHR) Heat Exchangers is part of the ASME Section XI VT-2 Leakage Examination boundary. Leakage Examinations are performed each period as required by Category C-B, Item Number C2.33 of the Code to insure pressure boundary integrity. In addition to the ASME Section XI leakage examinations, Operator walkdowns as specified by Plant Operating Procedures are also performed. The combination of operator walkdowns and period leakage examinations that are performed provide additional assurances in maintaining plant safety.

V. Alternate Examinations:

R.E. Ginna Nuclear Power Plant proposes that the volumetric examination coverage identified above shall be acceptable in fulfilling the required volumetric examination coverage.

Request for Relief No. 15 (Con't)

VI. Justification for the Granting of Relief:

The Residual Heat Removal (RHR) Heat Exchangers were designed and constructed to ASME Section VIII, 1965 Edition construction code. This code did not contain requirements to ensure that items be made accessible for future NDE examinations. Due to the original limited design accessibility, examination coverage can not be obtained to the extent required by the current ASME Code.

ASME Section XI periodic leakage examinations are performed as well as Operator walkdowns as specified by Plant Operating Procedures. These operator walkdowns and periodic system leakage examinations provide additional assurances in maintaining plant safety. The identified volumetric examination coverage for these items should be acceptable in fulfilling coverage requirements.

VII. Implementation Schedule:

These examinations will be performed in accordance with Table IWC-2500-1 for the Fourth Interval.

APPROVED
RELIEF REQUEST NO. 16
RESIDUAL HEAT REMOVAL (RHR) HEAT EXCHANGER INTEGRAL ATTACHMENT WELD EXAMINATION LIMITATIONS

(Was Relief Request No. 44 for Third Interval)

I. System/Component(s) for Which Relief is Requested:

This Relief Request pertains to two (2) Residual Heat Removal (RHR) Heat Exchanger Component Supports containing Integral Attachments, ASME Class 2, Category C-C, Item Number C3.10. Each component support on the Heat Exchangers are identical and contains three (3) channel iron Integral Attachments. The Code requires that for multiple vessels, only one welded attachment of only one of the multiple vessels shall be selected for surface examination. Limited coverage is identified below.

Summary #	Component	Weld ID	Exam Coverage	Limitations
169130	EAC02A	1A-1	65%	Inside of Channel Iron
169140	EAC02A	1A-2	65%	Inside of Channel Iron
169150	EAC02A	1A-3	65%	Inside of Channel Iron
169330	EAC02B	1B-1	67%	Inside of Channel Iron
169340	EAC02B	1B-2	64%	Inside of Channel Iron
169350	EAC02B	1B-3	65%	Inside of Channel Iron

II. ASME Section XI Code Requirement:

ASME Section XI Code requires essentially 100% of the weld length or area to obtain coverage. ASME Section XI Code Case N-460 states that if the entire examination volume or area cannot be examined due to interference by another component or part geometry, a reduction in coverage is acceptable provided that the coverage (the lack of) is less than 10%.

Request for Relief No. 16 (Con't)

III. Requirement from Which Relief is Requested:

Relief is requested from examining 100% of the weld length or areas for these identified items. Examining 100% of the weld length or areas would be impractical due to original design configuration.

IV. Basis for Relief:

Relief is requested pursuant to the provisions of 10 CFR 50.55a(g)(5)(iii), the required examination coverage for the identified items are impractical and would require redesign to allow examination or to be replaced to enable inspection.

The two identical Residual Heat Removal (RHR) Heat Exchangers was designed and constructed to ASME Section VIII, 1965 Edition. This code did not contain requirements to ensure that items be accessible for future examinations. The ASME Class 2 Integral Attachments identified above were installed utilizing this construction code which did not provide for accessibility for future ISI NDE. The ISI ASME Section XI requirement are identified within Table IWC-2500-1, Category C-C, Item Number C3.10.

The Residual Heat Removal (RHR) Heat Exchangers is part of the ASME Section XI VT-2 Leakage Examination boundary. In addition to the ASME Section XI leakage examinations, Operator walkdowns as specified by Plant Operating Procedures are also performed. The combination of operator walkdowns and period leakage examinations that are performed provide additional assurances in maintaining plant safety.

V. Alternate Examinations:

R.E. Ginna Nuclear Power Plant proposes that the surface examination coverage Identified above be acceptable in fulfilling the required examination coverage.

Request for Relief No. 16 (Con't)

VI. Justification for the Granting of Relief:

The Residual Heat Removal (RHR) Heat Exchangers were designed and constructed to ASME Section VIII, 1965 Edition construction code. This code did not contain requirements to ensure that items be made accessible for future NDE examinations. Due to the original design configuration, examination coverage can not be obtained to the extent required by the current ASME Code. The Integral Attachment welded configuration consist of a channel iron which is on an angle and welded all around to the curved Lower Head of the Heat Exchanger. The inside area of the channel iron to the Lower Head is an acute angle which prevents access for surface examination.

ASME Section XI periodic leakage examinations are performed as well as Operator walkdowns as specified by Plant Operating Procedures. These operator walkdowns and periodic system leakage examinations provide additional assurances in maintaining plant safety. The identified examination coverage for these items should be acceptable in fulfilling coverage requirements.

VII. Implementation Schedule:

Implementation shall be performed for the Fourth Interval.

OPEN

Relief Request # 17

Appendix VIII, Supplement 10, PDI Program Alternative Requirements

I. System/Components(s) for Which Relief is Requested:

ASME Section XI, 1995 Edition, 1996 Addenda, Class 1, Category B-F, Pressure Retaining Piping Welds, Item Numbers B5.10, B5.40 and B5.70, subject to ultrasonic examination using procedures, personnel, and equipment qualified to ASME Section XI, 1995 Edition, 1996 Addenda, Appendix VIII, Supplement 10 criteria.

II. ASME Section XI Code Requirements:

The following paragraphs or statements are from ASME Section XI, Rules for Inservice Inspection of Nuclear Power plant Components, 1995 Edition, 1996 Addenda, Appendix VIII, Supplement 10, Qualification Requirements for Dissimilar Metal Piping Welds, and identify the specific requirements that are included in this request for relief.

Item 1 - Paragraph 1.1(b) states in part - Pipe diameters within a range of 0.9 to 1.5 times a nominal diameter shall be considered equivalent.

Item 2 - Paragraph 1.1(d) states - All flaws in the specimen set shall be cracks.

Item 3 - Paragraph 1.1(d)(1) states - At least 50% of the cracks shall be in austenitic material. At least 50% of the cracks in austenitic material shall be contained wholly in weld or buttering material. At least 10% of the cracks shall be in ferritic material. The remainder of the cracks may be in either austenitic or ferritic material.

Item 4 - Paragraph 1.2(b) states in part - The number of unflawed grading units shall be at least twice the number of flawed grading units.

Item 5 - Paragraph 1.2(c)(1) and 1.3(c) state in part - At least 1/3 of the flaws, rounded to the next higher whole number, shall have depths between 10% and 30% of the nominal pipe wall thickness. Paragraph 1.4(b) distribution table requires 20% of the flaws to have depths between 10% and 30%.

Item 6 - Paragraph 2.0 first sentence states - The specimen inside surface and identification shall be concealed from the candidate.

Request for Relief No. 17 (Con't)

II (Con't)

Item 7 - Paragraph 2.2(b) states in part - The regions containing a flaw to be sized shall be identified to the candidate.

Item 8 - Paragraph 2.2(c) states in part - For a separate length sizing test, the regions of each specimen containing a flaw to be sized shall be identified to the candidate.

Item 9 - Paragraph 2.3(a) states - For the depth sizing test, 80% of the flaws shall be sized at a specific location on the surface of the specimen identified to the candidate.

Item 10 - Paragraph 2.3(b) states - For the remaining flaws, the regions of each specimen containing a flaw to be sized shall be identified to the candidate. The candidate shall determine the maximum depth of the flaw in each region.

Item 11 - Table VIII-S2-1 provides the false call criteria when the number of unflawed grading units is at least twice the number of flawed grading units.

III. Requirement from which Relief is Requested:

Relief is requested to use the following alternative requirements for implementation of Appendix VIII, Supplement 10 requirements. They will be implemented through the PDI Program.

A copy of the proposed revision to Supplement 10 is attached. It identifies the proposed alternatives and allows them to be viewed in context. It also identifies additional clarifications and enhancements for information. It has been submitted to the ASME Code Committee for consideration.

IV. Basis for Relief:

Item 1 - The proposed alternative to Paragraph 1.1(b) states:
"The specimen set shall include the minimum and maximum pipe diameters and thicknesses for which the examination procedure is applicable. Pipe diameters within a range of **1/2 in. (13 mm) of the** nominal diameter shall be considered equivalent. Pipe diameters larger than 24 in. **(610 mm)** shall be considered to be flat. When a range of thicknesses is to be examined, a thickness tolerance of ±25% is acceptable."

Request for Relief No. 17 (Con't)

IV (Con't)

Technical Basis - The change in the minimum pipe diameter tolerance from 0.9 times the diameter to the nominal diameter minus 0.5 inch provides tolerances more in line with industry practice. Though the alternative is less stringent for small pipe diameters they typically have a thinner wall thickness than larger diameter piping. A thinner wall thickness results in shorter sound path distances that reduce the detrimental effects of the curvature. This change maintains consistency between Supplement 10 and the recent revision to Supplement 2.

Item 2 - The proposed alternative to Paragraph 1.1(d) states:
"At least 60% of the flaws shall be cracks, the remainder shall be alternative flaws. Specimens with IGSCC shall be used when available. Alternative flaws, if used, shall provide crack-like reflective characteristics and shall be limited to the case where implantation of cracks produces spurious reflectors that are uncharacteristic of actual flaws. Alternative flaw mechanisms shall have a tip width of less than or equal to 0.002 in. (.05 mm). Note, to avoid confusion the proposed alternative modifies instances of the term "cracks" or "cracking" to the term "flaws" because of the use of alternative flaw mechanisms."

Technical Basis - As illustrated below, implanting a crack requires excavation of the base material on at least one side of the flaw. While this may be satisfactory for ferritic materials, it does not produce a useable axial flaw in austenitic materials because the sound beam, which normally passes only through base material, must now travel through weld material on at least one side, producing an unrealistic flaw response. In addition, it is important to preserve the dendritic structure present in field welds that would otherwise be destroyed by the implantation process. To resolve these issues, the proposed alternative allows the use of up to 40% fabricated flaws as an alternative flaw mechanism under controlled conditions. The fabricated flaws are isostatically compressed which produces ultrasonic reflective characteristics similar to tight cracks.

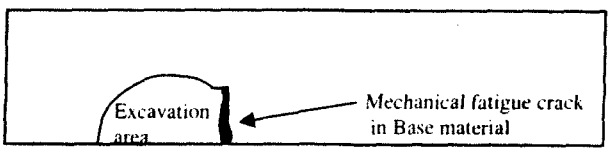

Request for Relief No. 17 (Con't)

IV (Con't)

Item 3 - The proposed alternative to Paragraph 1.1(d)(1) states:

"At least **80%** of the **flaws** shall be contained wholly in weld or buttering material. At least **one and a maximum of** 10% of the **flaws** shall be in ferritic **base** material. **At least one and a maximum of 10% of the flaws shall be in austenitic base material."**

Technical Basis - Under the current Code, as few as 25% of the flaws are contained in austenitic weld or buttering material. Recent experience has indicated that flaws contained within the weld are the likely scenarios. The metallurgical structure of austenitic weld material is ultrasonically more challenging than either ferritic or austenitic base material. The proposed alternative is therefore more challenging than the current Code.

Item 4 - The proposed alternative to Paragraph 1.2(b) states:

"Detection sets shall be selected from Table VIII-S**10**-1. The number of unflawed grading units shall be at least **one and a half** times the number of flawed grading units."

Technical Basis - Table S10-1 provides a statistically based ratio between the number of unflawed grading units and the number of flawed grading units. The proposed alternative reduces the ratio to 1.5 times to reduce the number of test samples to a more reasonable number from the human factors perspective. However, the statistical basis used for screening personnel and procedures is still maintained at the same level with competent personnel being successful and less skilled personnel being unsuccessful. The acceptance criteria for the statistical basis are in Table VIII-S10-1.

Item 5 - The proposed alternative to the flaw distribution requirements of Paragraph 1.2(c)(1) (detection) and 1.3(c) (length) is to use the Paragraph 1.4(b) (depth) distribution table (see below) for all qualifications.

Flaw Depth (% Wall Thickness)	Minimum Number of Flaws
10-30%	20%
31-60%	20%
61-100%	20%

Request for Relief No. 17 (Con't)

IV (Con't)

In addition, the proposed alternative includes the following: "At least 75% of the flaws shall be in the range of 10 to 60% of wall thickness."

Technical Basis - The proposed alternative uses the depth sizing distribution for both detection and depth sizing because it provides for a better distribution of flaw sizes within the test set. This distribution allows candidates to perform detection, length, and depth sizing demonstrations simultaneously utilizing the same test set. The requirement that at least 75% of the flaws shall be in the range of 10 to 60% of wall thickness provides an overall distribution tolerance yet the distribution uncertainty decreases the possibilities for testmanship that would be inherent to a uniform distribution. It must be noted that it is possible to achieve the same distribution utilizing the present requirements, but it is preferable to make the criteria consistent.

Item 6 - The proposed alternative to Paragraph 2.0 first sentence states:

"For qualifications from the outside surface, the specimen inside surface and identification shall be concealed from the candidate. When qualifications are performed from the inside surface, the flaw location and specimen identification shall be obscured to maintain a "blind test"."

Technical Basis - The current Code requires that the inside surface be concealed from the candidate. This makes qualifications conducted from the inside of the pipe (e.g., PWR nozzle to safe end welds) impractical. The proposed alternative differentiates between ID and OD scanning surfaces, requires that they be conducted separately, and requires that flaws be concealed from the candidate. This is consistent with the recent revision to Supplement 2.

Items 7 and 8 - The proposed alternatives to Paragraph 2.2(b) and 2.2(c) state:

"... containing a flaw to be sized **may** be identified to the candidate."

Request for Relief No. 17 (Con't)

IV (Con't)

Technical Basis - The current Code requires that the regions of each specimen containing a flaw to be length sized shall be identified to the candidate. The candidate shall determine the length of the flaw in each region (Note, that length and depth sizing use the term "regions" while detection uses the term "grading units" - the two terms define different concepts and are not intended to be equal or interchangeable). To ensure security of the samples, the proposed alternative modifies the first "shall" to a "may" to allow the test administrator the option of not identifying specifically where a flaw is located. This is consistent with the recent revision to Supplement 2.

Items 9 and 10 - The proposed alternative to Paragraph 2.3(a) and 2.3(b) state:

"... regions of each specimen containing a flaw to be sized **may** be identified to the candidate."

Technical Basis - The current Code requires that a large number of flaws be sized at a specific location. The proposed alternative changes the "shall" to a "may" which modifies this from a specific area to a more generalized region to ensure security of samples. This is consistent with the recent revision to Supplement 2. It also incorporates terminology from length sizing for additional clarity.

Item 11 - The proposed alternative modifies the acceptance criteria of Table VIII-S2-1 as follows:

Request for Relief No. 17 (Con't)

IV (Con't)

10

TABLE VIII-S~~2~~-1
PERFORMANCE DEMONSTRATION DETECTION TEST
ACCEPTANCE CRITERIA

Detection Test Acceptance Critera		False Call Test Acceptance Criteria	
No. of Flawed Grading Units	Minimum Detection Criteria	No. of Unflawed Grading Units	Maximum Number of False Calls
~~5~~	~~5~~	~~10~~	~~0~~
~~6~~	~~6~~	~~12~~	~~1~~
~~7~~	~~6~~	~~14~~	~~1~~
~~8~~	~~7~~	~~16~~	~~2~~
~~9~~	~~7~~	~~18~~	~~2~~
10	8	~~20~~ 15	~~3~~ 2
11	9	~~22~~ 17	~~3~~ 3
12	9	~~24~~ 18	~~3~~ 3
13	10	~~26~~ 20	~~4~~ 3
14	10	~~28~~ 21	~~5~~ 3
15	11	~~30~~ 23	~~5~~ 4
16	12	~~32~~ 24	~~6~~ 4
17	12	~~34~~ 26	~~6~~ 4
18	13	~~36~~ 27	~~7~~ 4
19	13	~~38~~ 29	~~7~~ 5
20	14	~~40~~ 30	~~8~~

Technical Basis - The proposed alternative is identified as new Table S10-1 above. It was modified to reflect the reduced number of unflawed grading units and allowable false calls. As a part of ongoing Code activities, Pacific Northwest National Laboratory (PNNL) has reviewed the statistical significance of these revisions and offered the revised Table S10-1.

Request for Relief No. 17 (Con't)

V. Alternative Examination:

In lieu of the requirements of ASME Section XI, 1995 Edition, 1996 Addenda, Appendix VIII, Supplement 10, the proposed alternative shall be used. The proposed alternative is described in the attachment.

VI. Justification for the Granting of Relief:

Pursuant to 10 CFR 50.55a(a)(3)(i), approval is requested to use the proposed alternatives described above in lieu of the ASME Section XI, 1995 Edition, 1996 Addenda, Appendix VIII, Supplement 10 requirements. Compliance with the proposed alternatives will provide an adequate level of quality and safety for examination of the affected welds.

VII. Implementation Schedule:

Examinations will be performed in accordance with Table IWB-2500-1 and 10CFR50.55a Rulemaking requirements for PDI implementation, as applicable, for the Fourth Interval.

Request for Relief No. 17 – Attachment (Con't)

SUPPLEMENT 10 – QUALIFICATION REQUIREMENTS FOR DISSIMILAR METAL PIPING WELDS
Relief Request # 17 – Attachment # 1 Page 1 of 13

Current Requirement	Proposed Change	Reasoning
	1.0 SCOPE	
	Supplement 10 is applicable to dissimilar metal piping welds examined from either the inside or outside surface. Supplement 10 is not applicable to piping welds containing supplemental corrosion resistant clad (CRC) applied to mitigate Intergranular Stress Corrosion Cracking (IGSCC).	A scope statement provides added clarity regarding the applicable range of each individual Supplement. The exclusion of CRC provides consistency between Supplement 10 and the recent revision to Supplement 2 (Reference BC 00-755). Note, an additional change identifying CRC as "in course of preparation" is being processed separately.
1.0 SPECIMEN REQUIREMENTS	**2.0 SPECIMEN REQUIREMENTS**	Renumbered
Qualification test specimens shall meet the requirements listed herein, unless a set of specimens is designed to accommodate specific limitations stated in the scope of the examination procedure (e.g., pipe size, weld joint configuration, access limitations). The same specimens may be used to demonstrate both detection and sizing qualification.	Qualification test specimens shall meet the requirements listed herein, unless a set of specimens is designed to accommodate specific limitations stated in the scope of the examination procedure (e.g., pipe size, weld joint configuration, access limitations). The same specimens may be used to demonstrate both detection and sizing qualification.	No Change
1.1 General. The specimen set shall conform to the following requirements.	**2.1 General.** The specimen set shall conform to the following requirements.	Renumbered
	(a) The minimum number of flaws in a test set shall be ten.	New, changed minimum number of flaws to 10 so sample set size for detection is consistent with length and depth sizing.
(a) Specimens shall have sufficient volume to minimize spurious reflections that may interfere with the interpretation process.	(b) Specimens shall have sufficient volume to minimize spurious reflections that may interfere with the interpretation process.	Renumbered

Request for Relief No. 17 – Attachment (Con't)

SUPPLEMENT 10 – QUALIFICATION REQUIREMENTS FOR DISSIMILAR METAL PIPING WELDS
Relief Request # 17 – Attachment # 1 Page 2 of 13

Current Requirement	Proposed Change	Reasoning
(b) The specimen set shall include the minimum and maximum pipe diameters and thicknesses for which the examination procedure is applicable. Pipe diameters within a range of 0.9 to 1.5 times a nominal diameter shall be considered equivalent. Pipe diameters larger than 24 in. shall be considered to be flat. When a range of thicknesses is to be examined, a thickness tolerance of ±25% is acceptable.	(c) The specimen set shall include the minimum and maximum pipe diameters and thicknesses for which the examination procedure is applicable. Pipe diameters within a range of **1/2 in. (13 mm) of the** nominal diameter shall be considered equivalent. Pipe diameters larger than 24 in. **(610 mm)** shall be considered to be flat. When a range of thicknesses is to be examined, a thickness tolerance of ±25% is acceptable.	Renumbered, metricated, the change in pipe diameter tolerance provides consistency between Supplement 10 and the recent revision to Supplement 2 (Reference BC 00-755)
(c) The specimen set shall include examples of the following fabrication condition:	(**d**) The specimen set shall include examples of the following fabrication conditions:	Renumbered, changed "condition" to "conditions"
(1) geometric conditions that normally require discrimination from flaws (e.g., counterbore or weld root conditions, cladding, weld buttering, remnants of previous welds, adjacent welds in close proximity);	(1) geometric **and material** conditions that normally require discrimination from flaws (e.g., counterbore or weld root conditions, cladding, weld buttering, remnants of previous welds, adjacent welds in close proximity**, and weld repair areas**);	Clarification, some of the items listed relate to material conditions rather than geometric conditions. Weld repair areas were added as a result of recent field experiences.
(2) typical limited scanning surface conditions (e.g., diametrical shrink, single-side access due to nozzle and safe end external tapers).	(2) typical limited scanning surface conditions (e.g., **weld crowns,** diametrical shrink, single-side access due to nozzle and safe end external tapers **for outside surface examinations; and internal tapers, exposed weld roots, and cladding conditions for inside surface examinations**). **Qualification requirements shall be satisfied separately for outside surface and inside surface examinations.**	Differentiates between ID and OD scanning surface limitations. Requires that ID and OD qualifications be conducted independently (Note, new paragraph 2.0 (identical to old paragraph 1.0) provides for alternatives when "a set of specimens is designed to accommodate specific limitations stated in the scope of the examination procedure.").

Request for Relief No. 17 – Attachment (Con't)

SUPPLEMENT 10 – QUALIFICATION REQUIREMENTS FOR DISSIMILAR METAL PIPING WELDS
Relief Request # 17 – Attachment # 1 **Page 3 of 13**

Current Requirement	Proposed Change	Reasoning
(d) All flaws in the specimen set shall be cracks.		Deleted this requirement, because new paragraph 2.3 below provides for the use of "alternative flaws" in lieu of cracks.
(1) At least 50% of the cracks shall be in austenitic material. At least 50% of the cracks in austenitic material shall be contained wholly in weld or buttering material. At least 10% of the cracks shall be in ferritic material. The remainder of the cracks may be in either austenitic or ferritic material.	**2.2 Flaw Location.** At least **80%** of the **flaws** shall be contained wholly in weld or buttering material. At least **one and a maximum of** 10% of the **flaws** shall be in ferritic **base** material. **At least one and a maximum of 10% of the flaws shall be in austenitic base material.**	Renumbered and re-titled. Flaw location percentages redistributed because field experience indicates that flaws contained in weld or buttering material are probable and represent the more stringent ultrasonic detection scenario.
(2) At least 50% of the cracks in austenitic base material shall be either IGSCC or thermal fatigue cracks. At least 50% of the cracks in ferritic material shall be mechanically or thermally induced fatigue cracks.	**2.3 Flaw Type.** **(a) At least 60% of the flaws shall be cracks, the remainder shall be alternative flaws. Specimens with IGSCC shall be used when available. Alternative flaws, if used, shall provide crack-like reflective characteristics and shall be limited to the case where implantation of cracks produces spurious reflectors that are uncharacteristic of actual flaws. Alternative flaw mechanisms shall have a tip width of less than or equal to 0.002 in. (.05 mm).**	Renumbered and re-titled. Alternative flaws are required for placing axial flaws in the HAZ of the weld and other areas where implantation of a crack produces metallurgical conditions that result in an unrealistic ultrasonic response. This is consistent with the recent revision to Supplement 2 (Reference BC 00-755). The 40% limit on alternative flaws is needed to support the requirement for up to 70% axial flaws. Metricated
(3) At least 50% of the cracks shall be coincident with areas described in (c) above.	**(b)** At least 50% of the **flaws** shall be coincident with areas described in **2.1(d)** above.	Renumbered. Due to inclusion of "alternative flaws"; use of "cracks" is no longer appropriate.
	2.4 Flaw Depth. All flaw depths shall be greater than 10% of the nominal pipe wall thickness. Flaw depths shall exceed the nominal clad thickness when placed in cladding.	Moved from old paragraph 1.3(c) and 1.4 and re-titled. Consistency between detection and sizing specimen set requirements (e.g., 20% vs. 1/3 flaw depth increments, e.g., original paragraph 1.3(c))

Request for Relief No. 17 – Attachment (Con't)

SUPPLEMENT 10 – QUALIFICATION REQUIREMENTS FOR DISSIMILAR METAL PIPING WELDS
Relief Request # 17 – Attachment # 1 Page 4 of 13

Current Requirement	Proposed Change	Reasoning
	Flaws in the sample set shall be distributed as follows: **Flaw Depth (% Wall Thickness) — Minimum Number of Flaws** **10-30% — 20%** **31-60% — 20%** **61-100% — 20%** **At least 75% of the flaws shall be in the range of 10 to 60% of wall thickness.**	
1.2 Detection Specimens. The specimen set shall include detection specimens that meet the following requirements.		Renumbered and re-titled and moved to paragraph 3.1(a). No other changes
(a) Specimens shall be divided into grading units. Each grading unit shall include at least 3 in. of weld length. If a grading unit is designed to be unflawed, at least 1 in. of unflawed material shall exist on either side of the grading unit. The segment of weld length used in one grading unit shall not be used in another grading unit. Grading units need not be uniformly spaced around the pipe specimen.		Renumbered to paragraph 3.1(a)(1). No other changes.
(b) Detection sets shall be selected from Table VIII-S2-1. The number of unflawed grading units shall be at least twice the number of flawed grading units.		Moved to new paragraph 3.1(a)(2).

Request for Relief No. 17 – Attachment (Con't)

SUPPLEMENT 10 – QUALIFICATION REQUIREMENTS FOR DISSIMILAR METAL PIPING WELDS
Relief Request # 17 – Attachment # 1 Page 5 of 13

Current Requirement	Proposed Change	Reasoning
(c) Flawed grading units shall meet the following criteria for flaw depth, orientation, and type.		Flaw depth requirements moved to new paragraph 2.4, flaw orientation requirements moved to new paragraph 2.5, flaw type requirements moved to new paragraph 2.3, "Flaw Type".
(1) All flaw depths shall be greater than 10% of the nominal pipe wall thickness. At least 1/3 of the flaws, rounded to the next higher whole number, shall have depths between 10% and 30% of the nominal pipe wall thickness. However, flaw depths shall exceed the nominal clad thickness when placed in cladding. At least 1/3 of the flaws, rounded to the next whole number, shall have depths greater than 30% of the nominal pipe wall thickness.		Deleted, for consistency in sample sets the depth distribution is the same for detection and sizing.
(2) At least 30% and no more than 70% of the flaws, rounded to the next higher whole number, shall be oriented axially. The remainder of the flaws shall be oriented circumferentially.	**2.5 Flaw Orientation.** **(a)** At least 30% and no more than 70% of the flaws, rounded to the next higher whole number, shall be oriented axially. The remainder of the flaws shall be oriented circumferentially.	Note, this distribution is applicable for detection and depth sizing. Paragraph 2.5(b)(1) requires that all length- sizing flaws be oriented circumferentially.
1.3 Length Sizing Specimens. The specimen set shall include length sizing specimens that meet the following requirements.		Renumbered and re-titled and moved to new paragraph 3.2
(a) All length sizing flaws shall be oriented circumferentially.		Moved, included in new paragraph 3.2(a)
(b) The minimum number of flaws shall be ten.		Moved, included in new paragraph 2.1 above

Request for Relief No. 17 – Attachment (Con't)

SUPPLEMENT 10 – QUALIFICATION REQUIREMENTS FOR DISSIMILAR METAL PIPING WELDS
Relief Request # 17 – Attachment # 1 Page 6 of 13

Current Requirement	Proposed Change	Reasoning
(c) All flaw depths shall be greater than 10% of the nominal pipe wall thickness. At least 1/3 of the flaws, rounded to the next higher whole number, shall have depths between 10% and 30% of the nominal pipe wall thickness. However, flaw depth shall exceed the nominal clad thickness when placed in cladding. At least 1/3 of the flaws, rounded to the next whole number, shall have depths greater than 30% of the nominal pipe wall thickness.		Moved, included in new paragraph 2.4 above after revision for consistency with detection distribution
1.4 Depth Sizing Specimens. The specimen set shall include depth sizing specimens that meet the following requirements.		Moved, included in new paragraphs 2.1, 2.3, 2.4
(a) The minimum number of flaws shall be ten.		Moved, included in new paragraph 2.1
(b) Flaws in the sample set shall not be wholly contained within cladding and shall be distributed as follows:		Moved, potential conflict with old paragraph 1.2(c)(1); "However, flaw depths shall exceed the nominal clad thickness when placed in cladding.". Revised for clarity and included in new paragraph 2.4
Flaw Depth (% Wall Thickness) / Minimum Number of Flaws 10-30% / 20% 31-60% / 20% 61-100% / 20% The remaining flaws shall be in any of the above categories.		Moved, included in paragraph 2.4 for consistent applicability to detection and sizing samples.

Request for Relief No. 17 – Attachment (Con't)

SUPPLEMENT 10 – QUALIFICATION REQUIREMENTS FOR DISSIMILAR METAL PIPING WELDS

Relief Request # 17 – Attachment # 1 **Page 7 of 13**

Current Requirement	Proposed Change	Reasoning
	(b) Sizing Specimen sets shall meet the following requirements.	Added for clarity
	(1) All length-sizing flaws shall be oriented circumferentially.	Moved from old paragraph 1.3(a)
	(2) Depth sizing flaws shall be oriented as in 2.5(a).	Included for clarity. Previously addressed by omission (i.e., length, but not depth had a specific exclusionary statement)
2.0 CONDUCT OF PERFORMANCE DEMONSTRATION	**3.0 CONDUCT OF PERFORMANCE DEMONSTRATION**	Renumbered
The specimen inside surface and identification shall be concealed from the candidate. All examinations shall be completed prior to grading the results and presenting the results to the candidate. Divulgence of particular specimen results or candidate viewing of unmasked specimens after the performance demonstration is prohibited.	**For qualifications from the outside surface, the specimen inside surface and identification shall be concealed from the candidate. When qualifications are performed from the inside surface, the flaw location and specimen identification shall be obscured to maintain a "blind test".** All examinations shall be completed prior to grading the results and presenting the results to the candidate. Divulgence of particular specimen results or candidate viewing of unmasked specimens after the performance demonstration is prohibited.	Differentiate between qualifications conducted from the outside and inside surface.
2.1 Detection Test. Flawed and unflawed grading units shall be randomly mixed	**3.1 Detection Qualification.**	Renumbered, moved text to paragraph 3.1(a)(3)
	(a) The specimen set shall include detection specimens that meet the following requirements.	Renumbered, moved from old paragraph 1.2.

Request for Relief No. 17 – Attachment (Con't)

SUPPLEMENT 10 – QUALIFICATION REQUIREMENTS FOR DISSIMILAR METAL PIPING WELDS
Relief Request # 17 – Attachment # 1 **Page 8 of 13**

Current Requirement	Proposed Change	Reasoning
	(1) Specimens shall be divided into grading units. Each grading unit shall include at least 3 in. **(76 mm)** of weld length. If a grading unit is designed to be unflawed, at least 1 in. **(25 mm)** of unflawed material shall exist on either side of the grading unit. The segment of weld length used in one grading unit shall not be used in another grading unit. Grading units need not be uniformly spaced around the pipe specimen.	Renumbered, moved from old paragraph 1.2(a). Metricated. No other changes.
	(2) Detection sets shall be selected from Table VIII-S**10**-1. The number of unflawed grading units shall be at least **one and a half** times the number of flawed grading units.	Moved from old paragraph 1.2(b). Table revised to reflect a change in the minimum sample set to 10 and the application of equivalent statistical false call parameters to the reduction in unflawed grading units. Human factors due to large sample size.
	(3) flawed and unflawed grading units shall be randomly mixed.	Moved from old paragraph 2.1
	(b) Examination equipment and personnel are qualified for detection when **personnel demonstrations** satisfy the acceptance criteria of Table **VIII S10-1** for both detection and false calls.	Moved from old paragraph 3.1. Modified to reflect the 100% detection acceptance criteria of procedures versus personnel and equipment contained in new paragraph 4.0 and the use of 1.5X rather than 2X unflawed grading units contained in new paragraph 3.1(a)(2). Note. the modified table maintains the screening criteria of the original Table VIII-S2-1.

Request for Relief No. 17 – Attachment (Con't)

SUPPLEMENT 10 – QUALIFICATION REQUIREMENTS FOR DISSIMILAR METAL PIPING WELDS
Relief Request # 17 – Attachment # 1 Page 9 of 13

Current Requirement	Proposed Change	Reasoning
2.2 Length Sizing Test	**3.2 Length Sizing Test**	Renumbered
(a) The length sizing test may be conducted separately or in conjunction with the detection test.	(a) **Each reported circumferential flaw in the detection test shall be length sized.**	Provides consistency between Supplement 10 and the recent revision to Supplement 2 (Reference BC 00-755).
(b) When the length sizing test is conducted in conjunction with the detection test, and less than ten circumferential flaws are detected, additional specimens shall be provided to the candidate such that at least ten flaws are sized. The regions containing a flaw to be sized shall be identified to the candidate. The candidate shall determine the length of the flaw in each region.	(b) When the length sizing test is conducted in conjunction with the detection test, and less than ten circumferential flaws are detected, additional specimens shall be provided to the candidate such that at least ten flaws are sized. The regions containing a flaw to be sized **may** be identified to the candidate. The candidate shall determine the length of the flaw in each region.	Change made to ensure security of samples, consistent with the recent revision to Supplement 2 (Reference BC 00-755). Note, length and depth sizing use the term "regions" while detection uses the term "grading units". The two terms define different concepts and are not intended to be equal or interchangeable.
(c) For a separate length sizing test, the regions of each specimen containing a flaw to be sized shall be identified to the candidate. The candidate shall determine the length of the flaw in each region.	(c) For a separate length sizing test, the regions of each specimen containing a flaw to be sized **may** be identified to the candidate. The candidate shall determine the length of the flaw in each region.	Change made to ensure security of samples, consistent with the recent revision to Supplement 2 (Reference BC 00-755).
	(d) Examination procedures, equipment, and personnel are qualified for length sizing **when** the RMS error of the flaw length measurements, as compared to the true flaw lengths, is less than or equal to 0.75 in. **(19 mm).**	Moved from old paragraph 3.2(a) includes inclusion of "when" as an editorial change. Metricated.

Request for Relief No. 17 – Attachment (Con't)

SUPPLEMENT 10 – QUALIFICATION REQUIREMENTS FOR DISSIMILAR METAL PIPING WELDS
Relief Request # 17 – Attachment # 1 Page 10 of 13

Current Requirement	Proposed Change	Reasoning
2.3 Depth Sizing Test	**3.3 Depth Sizing Test**	Renumbered
(a) For the depth sizing test, 80% of the flaws shall be sized at a specific location on the surface of the specimen identified to the candidate.	(a) **The depth sizing test may be conducted separately or in conjunction with the detection test. For a separate depth sizing test, the regions of each specimen containing a flaw to be sized may be identified to the candidate. The candidate shall determine the maximum depth of the flaw in each region.**	Change made to ensure security of samples, consistent with the recent revision to Supplement 2 (Reference BC 00-755).
(b) For the remaining flaws, the regions of each specimen containing a flaw to be sized shall be identified to the candidate. The candidate shall determine the maximum depth of the flaw in each region.	(b) **When the depth sizing test is conducted in conjunction with the detection test, and less than ten flaws are detected, additional specimens shall be provided to the candidate such that at least ten flaws are sized.** The regions of each specimen containing a flaw to be sized **may** be identified to the candidate. The candidate shall determine the maximum depth of the flaw in each region.	Change made to be consistent with the recent revision to Supplement 2 (Reference BC 00-755). Changes made to ensure security of samples, consistent with the recent revision to Supplement 2 (Reference BC 00-755).
	(c) Examination procedures, equipment, and personnel are qualified for depth sizing when the RMS error of the flaw depth measurements, as compared to the true flaw depths, is less than or equal to 0.125 in. **(3 mm).**	Moved from old paragraph 3.2(b). Metricated.

Request for Relief No. 17 – Attachment (Con't)

SUPPLEMENT 10 – QUALIFICATION REQUIREMENTS FOR DISSIMILAR METAL PIPING WELDS
Relief Request # 17 – Attachment # 1 Page 11 of 13

Current Requirement	Proposed Change	Reasoning
3.0 ACCEPTANCE CRITERIA		Delete as a separate category. Moved to new paragraph detection (3.1) and sizing 3.2 and 3.3
3.1 Detection Acceptance Criteria. Examination procedures, equipment, and personnel are qualified for detection when the results of the performance demonstration satisfy the acceptance criteria of Table VIII-S2-1 for both detection and false calls.		Moved to new paragraph 3.1(b), reference changed to Table S10 from S2 because of the change in the minimum number of flaws and the reduction in unflawed grading units from 2X to 1.5X.
3.2 Sizing Acceptance Criteria		Deleted as a separate category. Moved to new paragraph on length 3.2 and depth 3.3
(a) Examination procedures, equipment, and personnel are qualified for length sizing the RMS error of the flaw length measurements, as compared to the true flaw lengths, is less than or equal to 0.75 inch.		Moved to new paragraph 3.2(d), included word "when" as an editorial change.
(b) Examination procedures, equipment, and personnel are qualified for depth sizing when the RMS error of the flaw depth measurements, as compared to the true flaw depths, is less than or equal to 0.125 in.		Moved to new paragraph 3.3(c)

Request for Relief No. 17 – Attachment (Con't)

SUPPLEMENT 10 – QUALIFICATION REQUIREMENTS FOR DISSIMILAR METAL PIPING WELDS
Relief Request # 17 – Attachment # 1 Page 12 of 13

Current Requirement	Proposed Change	Reasoning
	4.0 PROCEDURE QUALIFICATION	New
	Procedure qualifications shall include the following additional requirements. (a) The specimen set shall include the equivalent of at least three personnel sets. Successful personnel demonstrations may be combined to satisfy these requirements. (b) Detectability of all flaws within the scope of the procedure shall be demonstrated. Length and depth sizing shall meet the requirements of paragraph 3.2 and 3.3. (c) At least one successful personnel demonstration has been performed. (d) To qualify new values of essential variables, at least one personnel qualification set is required.	New. Based on experience gained in conducting qualifications, the equivalent of 3 personnel sets (i.e., a minimum of 30 flaws) is required to provide enough flaws to adequately test the capabilities of the procedure. Combining successful demonstrations allows a variety of examiners to be used to qualify the procedure. Detectability of each flaw within the scope of the procedure is required to ensure an acceptable personnel pass rate. The last sentence is equivalent to the previous requirements and is satisfactory for expanding the essential variables of a previously qualified procedure

Request for Relief No. 17 – Attachment (Con't)

SUPPLEMENT 10 – QUALIFICATION REQUIREMENTS FOR DISSIMILAR METAL PIPING WELDS
Relief Request # 17 – Attachment # 1
Page 13 of 13

Current Requirement	Proposed Change	Reasoning

10

TABLE VIII-S2-1
PERFORMANCE DEMONSTRATION DETECTION TEST
ACCEPTANCE CRITERIA

Detection Test Acceptance Critera		False Call Test Acceptance Criteria	
No. of Flawed Grading Units	Minimum Detection Criteria	No. of Unflawed Grading Units	Maximum Number of False Calls
~~5~~	~~5~~	~~10~~	~~0~~
~~6~~	~~6~~	~~12~~	~~1~~
~~7~~	~~6~~	~~14~~	~~1~~
~~8~~	~~7~~	~~16~~	~~2~~
~~9~~	~~7~~	~~18~~	~~2~~
10	8	~~20~~ 15	~~3~~ 2
11	9	~~22~~ 17	~~3~~ 3
12	9	~~24~~ 18	~~3~~ 3
13	10	~~26~~ 20	~~4~~ 3
14	10	~~28~~ 21	~~5~~ 3
15	11	~~30~~ 23	~~5~~ 3
16	12	~~32~~ 24	~~6~~ 4
17	12	~~34~~ 26	~~6~~ 4
18	13	~~36~~ 27	~~7~~ 4
19	13	~~38~~ 29	~~7~~ 4
20	14	~~40~~ 30	~~8~~ 5

WITHDRAWN
RELIEF REQUEST NO. 35
ASME CODE SECTION XI ALTERNATIVE FOR THE FOURTH INTERVAL ISI PROGRAM

(Was Relief Request No. 35 for Third Interval)

I. System/Component(s) for which Relief is Requested:

This Relief Request is requested for Inservice Inspection of all ASME Class 1, Class 2, and Class 3 components in accordance with the rules provided in ASME Section XI Code, Division 1.

II. Code Requirement:

10 CFR 50.55a specifies the ASME Section XI Code, 1989 Edition, should be utilize for the preparation and use of licensees Inservice Inspection Program as well as their Repair and Replacement Program. Later editions of ASME Section XI Codes may be utilized only if approved by the NRC.

III. Code Requirement from Which Relief is Requested:

R. E. Ginna Nuclear Power Plant is requesting relief from utilizing the ASME Section XI Code, 1989 Edition, and is requesting permission to use the ASME Section XI Code, 1995 Edition with the 1996 Addenda for Class 1, 2, and 3 components for our Fourth Interval ISI Program in its place.

This Relief Request does not address Containment (IWE/IWL and applicable IWA) requirements. The Containment requirements shall be performed to ASME Section XI Code, 1992 Edition with the 1992 Addenda. This year and Edition of ASME Section XI Code is the basis for the EPRI/ Industry Guideline which will be used to develop and implement our Containment Inspection Program.

RELIEF REQUEST NO. 35 (Con't)

IV. Basis for Relief:

Relief is requested pursuant to the provisions of 10 CFR 50.55a(a)(3)(i), request for approval to use a later ASME Section XI Code. The proposed alternative will provide an acceptable level of quality and safety.

On December 3, 1997, the NRC issued a proposed change in the Federal Register to amend 10 CFR 50.55a for Inservice Inspection. The proposed Rulemaking endorsed the use of ASME Section XI Code, 1995 Edition with the 1996 Addenda for the Inservice Inspection as well as Repair and Replacement of Class 1, 2, and components. This later code provides clarification to those requirements specified within the current approved Code (1989 Section XI). By utilizing the later Section XI Code for Inservice Inspection as well as Repair and Replacement of Class 1, 2, and 3 components, the number of needed relief requests that the NRC would be required to process would be minimized.
It is requested that ASME Section XI Code, 1995 Edition with the 1996 Addenda be utilized to develop R.E. Ginna Nuclear Power Plant Fourth Interval Program.

V. Alternate Examinations:

R.E. Ginna Nuclear Power Plant requests that our Fourth Interval Inservice Inspection (ISI) Program as well as our Repair and Replacement Program shall conform to ASME Section XI Code, 1995 Edition with the 1996 Addenda for Class 1, 2, and 3 components including supports.

VI. Justification for the Granting of Relief:

On December 3, 1997, the NRC issued a proposed change in the Federal Register to amend 10 CFR 50.55a for Inservice Inspection. The proposed Rulemaking endorsed the use of ASME Section XI Code, 1995 Edition with the 1996 Addenda for the Inservice Inspection as well as for Repair or Replacement of Class 1, 2, and 3 components.

RELIEF REQUEST NO. 35 (Con't)

VI (Con't)

The use of the Code (1995 with the 1996 Addenda) provides clarification to those requirements specified within the current approved Code (1989 Section XI Code). NRC approval to utilize the later Section XI Code for Inservice Inspection, as well as Repair and Replacement of Class 1, 2, and 3 components, would minimize the number of needed relief requests that the NRC would be required to process.

VII. Implementation Schedule:

Examinations will be performed during the Fourth 10-year Interval, starting January 1, 2000.

1.0 **General:**

The P&ID drawings included within this section identify drawings containing lines classified as ASME Class 1, 2, 3, and High Energy pressure boundary. A unique line identifier has been established for each class line and high energy pressure boundary line. The line identifier was used in the preparation of the "Line List" to identify the pressure boundary as well as document the line on the applicable P&ID drawing. The "Line List", appearing in Section 5, shall take precedence over this Section.

The rules of ASME Section XI were applied to both class and high energy pressure boundaries as specified by IWB/C/D/F-1200. The color coded lines appearing on the applicable drawings identify those lines requiring Inservice Inspection and are not exempt under ASME Section XI for volumetric, surface, and/or visual examinations. Leakage examination boundaries and accompanying visual examinations for leakage is not addressed on these drawings.

Pressure boundaries that are not color coded reflect lines that are exempt from volumetric, surface, and/or visual examinations.

The following color codes were applied to Class 1, 2, 3, and High Energy pressure boundaries;

Class 1	=	Blue
Class 2	=	Red
Class 3	=	Green
High Energy	=	Yellow

Class MC and CC are not included in this section. See Section 13 for guidance of Class MC and CC Components.

The following list identifies the P&ID drawings that contain ASME Class 1, 2, 3, or High Energy pressure boundaries. (Note: Actual Color Coded P&IDs included within this section are stamped with "For 4th Interval ISI use only, Rev. 0)

Drawing Number	Revision
33013-1231	Rev. 27
33013-1232	Rev. 16
33013-1236 Sheet 1	Rev. 11
33013-1236 Sheet 2	Rev. 8
33013-1237	Rev. 35
33013-1238	Rev. 15
33013-1239 Sheet 1	Rev. 15
33013-1239 Sheet 2	Rev. 13
33013-1245	Rev. 26
33013-1246 Sheet 1	Rev. 9
33013-1246 Sheet 2	Rev. 8
33013-1247	Rev. 25
33013-1248	Rev. 21
33013-1250 Sheet 1	Rev. 26
33013-1250 Sheet 2	Rev. 19
33013-1250 Sheet 3	Rev. 15
33013-1258	Rev. 19
33013-1260	Rev. 17
33013-1261	Rev. 27
33013-1262 Sheet 1	Rev. 15
33013-1262 Sheet 2	Rev. 6
(*) 33013-1263	Rev. 9
33013-1264	Rev. 18
33013-1265 Sheet 1	Rev. 7
33013-1265 Sheet 2	Rev. 7
33013-1266	Rev. 20
33013-1270 Sheet 1	Rev. 9
33013-1272 Sheet 1	Rev. 8
33013-1272 Sheet 2	Rev. 8
(*) 33013-1275 Sheet 1	Rev. 7

P & I BOUNDARY DRAWINGS

Drawing Number	Revision
33013-1275 Sheet 2	Rev. 2
33013-1277 Sheet 1	Rev. 13
(*) 33013-1278 Sheet 1	Rev. 14
(*) 33013-1278 Sheet 2	Rev. 14
33013-1279	Rev. 10
33013-1863	Rev. 12
33013-1865	Rev. 11
33013-1866	Rev. 17
33013-1870	Rev. 11
33013-1882	Rev. 16
33013-1886 Sheet 2	Rev. 8
33013-1887	Rev. 7
(*) 33013-1893	Rev. 13
33013-1908 Sheet 3	Rev. 9
33013-1915	Rev. 16
33013-1991	Rev. 13
(*) 33013-2278	Rev. 3
33013-2279 Sheet 1	Rev. 4
33013-2285	Rev. 11

Note: (*) Identifies P&IDs containing ASME Class piping NPS 1" and below. These identified drawings are not included within this section.

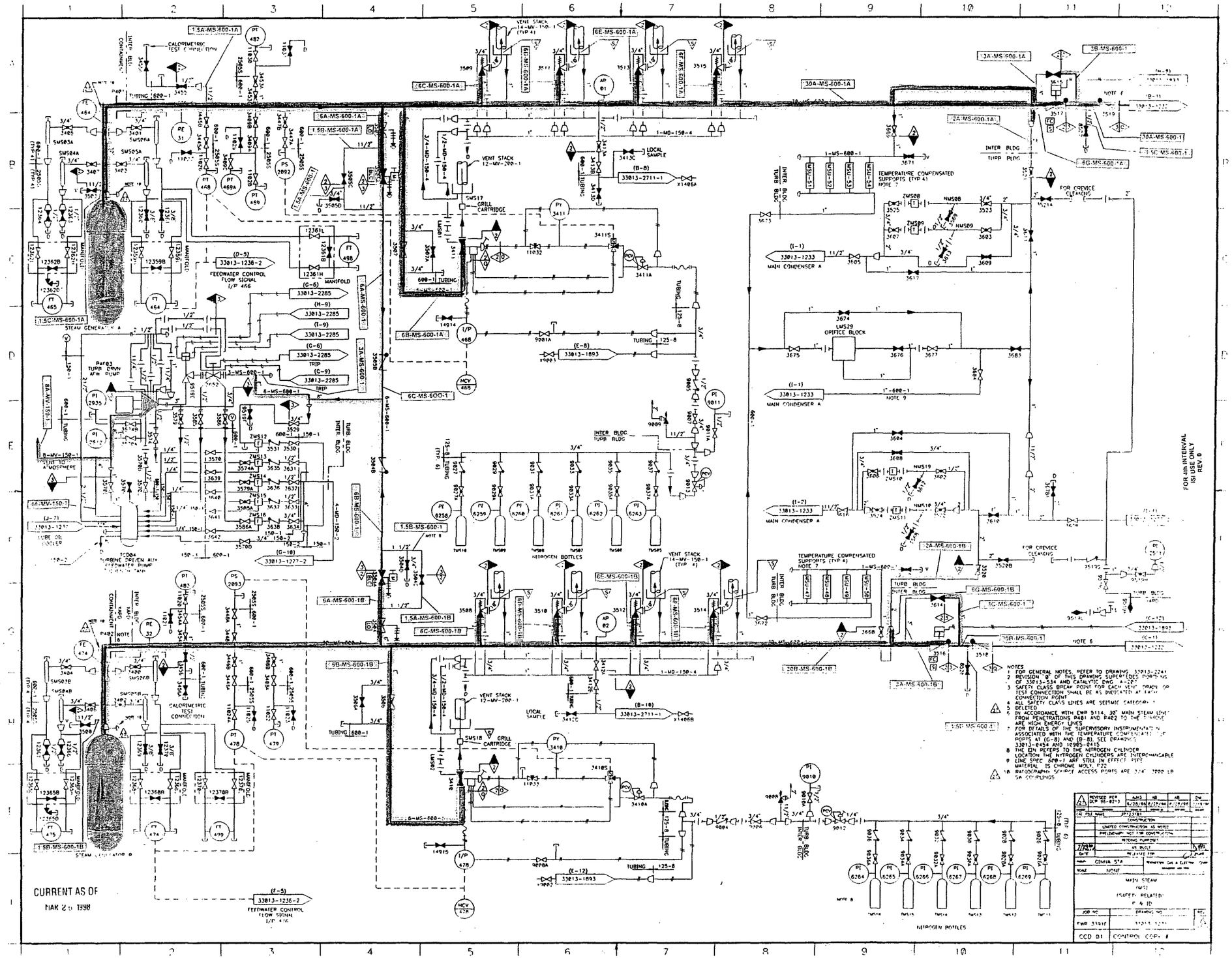

MAIN STEAM
33013-1231 Rev 27

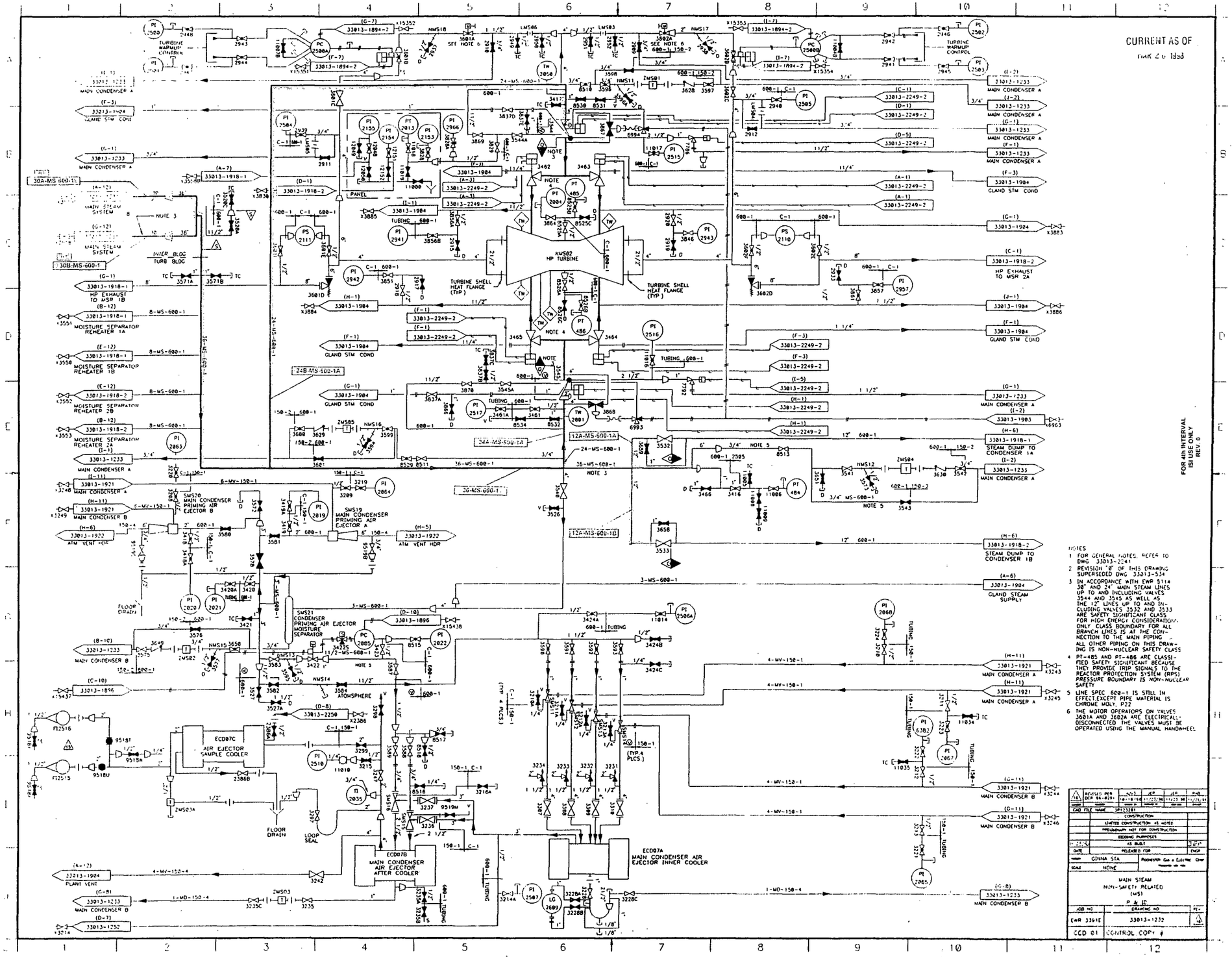

MAIN STEAM
33013-1232 Rev 16

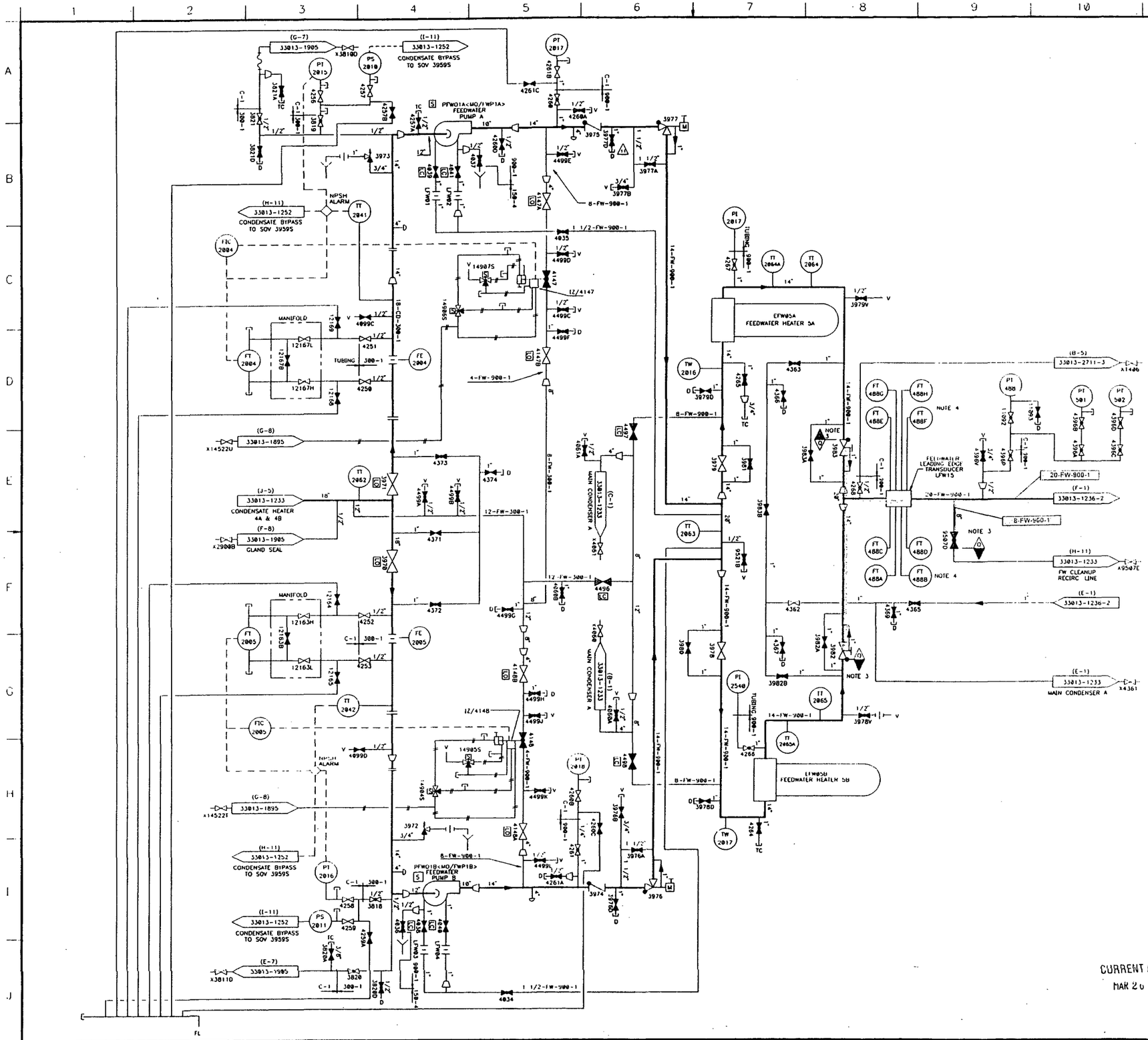

NOTES

1 FOR GENERAL NOTES REFER TO DRAWING 33013-2241

2 REVISION "0" OF THIS DRAWING SUPERSEDED PORTIONS OF 33013-1236,REVISION 10

3 IN ACCORDANCE WITH EWR 3914 8" 14", AND 28" MAIN FEED WATER PIPES ARE SAFETY SIGNIFICANT CLASS FOR HIGH ENERGY LINE CONSIDERATIONS ONLY. CLASS BOUNDARY FOR ALL BRANCH LINES IS AT THE CONNECTION TO THE MAIN PIPING.

4 ALL 488 SERIES FLOW TRANSMITTERS (FT-488 A,B,C,D,E,F,G,AND H) ARE CLASSIFIED SAFETY SIGNIFICANT SINCE OPERABILITY IS REQUIRED BY TECH SPEC. PRESSURE BOUNDARY IS NON-NUCLEAR SAFETY CLASS

5 ELECT MOTOR EIN'S FOR MECH EQUIP ARE DEPICTED IN BRACKETS ADJACENT TO MECH EQUIP. PER SFEWR 10328

FOR 4th INTERVAL ISI USE ONLY REV. 0

1	REVISED PER DCR 96-0326	AJH 3	MT	MT	RAD
		11/21/96	2/4/97	2/4/97	2/4/97
CAD FILE NAME	JPT13641				
	CONSTRUCTION				
	LIMITED CONSTRUCTION AS NOTED				
	PRELIMINARY NOT FOR CONSTRUCTION				
	BIDDING PURPOSES				
3/14/97	AS-BUILT				WJF
DATE	RELEASED FOR				ENGR

GINNA STA — ROCHESTER GAS & ELECTRIC CORP

SCALE NONE

FEEDWATER (FW) P & ID

JOB NO	DRAWING NO	REV
EWR 3391E	33013-1236 SHEET 1 OF 2	1
CCD 01	CONTROL COPY #	

CURRENT AS OF MAR 26 1998

FEED WATER 33013-1236-Sheet 1 Rev. 11

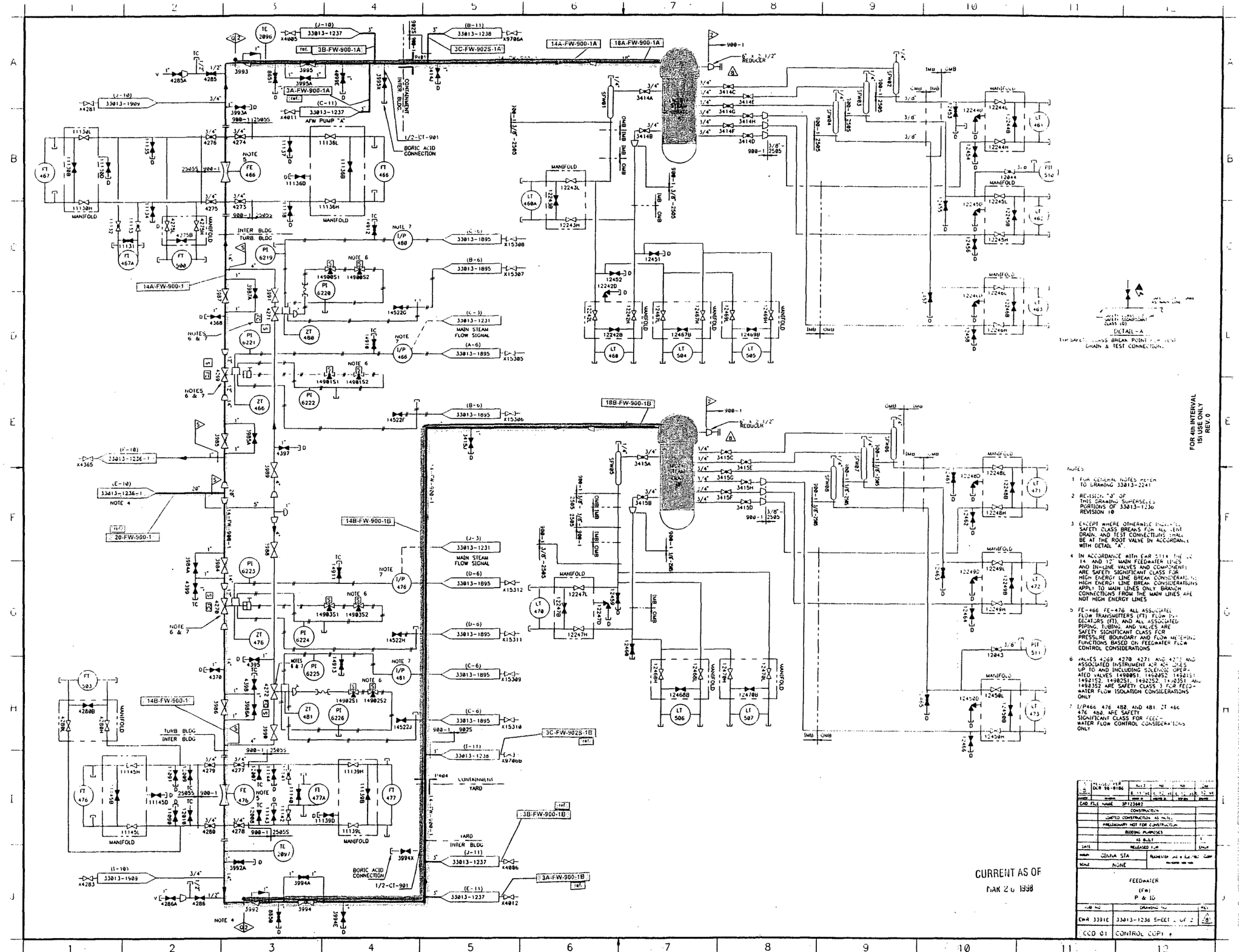
14A-FW-900-1A
18A-FW-900-1A
18B-FW-900-1B
14B-FW-900-1B
3B-FW-900-1A
3A-FW-900-1A
3C-FW-902S-1A
3C-FW-902S-1B
3B-FW-900-1B
3A-FW-900-1B
20-FW-900-1
14A-FW-900-1
14B-FW-900-1
AFW PUMP "A"
BORIC ACID CONNECTION
INTER BLDG
CONTAINMENT
TURB BLDG
MAIN STEAM FLOW SIGNAL
CONTAINMENT
YARD
MANIFOLD
REDUCER
DETAIL - A
FOR 4th INTERVAL ISI USE ONLY REV. 0
NOTES
1 FOR GENERAL NOTES REFER TO DRAWING 33013-2241
2 REVISION "0" OF THIS DRAWING SUPERSEDES PORTIONS OF 33013-1236 REVISION 10
3 EXCEPT WHERE OTHERWISE INDICATED SAFETY CLASS BREAKS FOR ALL VENT DRAIN AND TEST CONNECTIONS SHALL BE AT THE ROOT VALVE IN ACCORDANCE WITH DETAIL "A"
4 IN ACCORDANCE WITH EWR 5114 THE 14" AND 12" MAIN FEEDWATER LINES AND IN-LINE VALVES AND COMPONENTS ARE SAFETY SIGNIFICANT CLASS FOR HIGH ENERGY LINE BREAK CONSIDERATIONS HIGH ENERGY LINE BREAK CONSIDERATIONS APPLY TO MAIN LINES ONLY BRANCH CONNECTIONS FROM THE MAIN LINES ARE NOT HIGH ENERGY LINES
5 FE-466 FE-476 ALL ASSOCIATED FLOW TRANSMITTERS (FT) FLOW INDICATORS (FI) AND ALL ASSOCIATED PIPING TUBING AND VALVES ARE SAFETY SIGNIFICANT CLASS FOR PRESSURE BOUNDARY AND FLOW METERING FUNCTIONS BASED ON FEEDWATER FLOW CONTROL CONSIDERATIONS
6 VALVES 4269 4270 4271 AND 4272 AND ASSOCIATED INSTRUMENT AIR AIR LINES UP TO AND INCLUDING SOLENOID OPERATED VALVES 1490851 1490852 1490851 1490852 1492851 1492852 1492851 AND 1492852 ARE SAFETY CLASS 3 FOR FEEDWATER FLOW ISOLATION CONSIDERATIONS ONLY
7 I/P466 476 480 AND 481 ZT 466 476 480 ARE SAFETY SIGNIFICANT CLASS FOR FEEDWATER FLOW CONTROL CONSIDERATIONS ONLY
CURRENT AS OF
MAR 20 1998
FEEDWATER
(FW)
P & ID
EWR 3391E
33013-1236 SHEET 1 OF 2
CONTROL COPY
FEED WATER
33013-1236-Sheet 2 Rev. 8

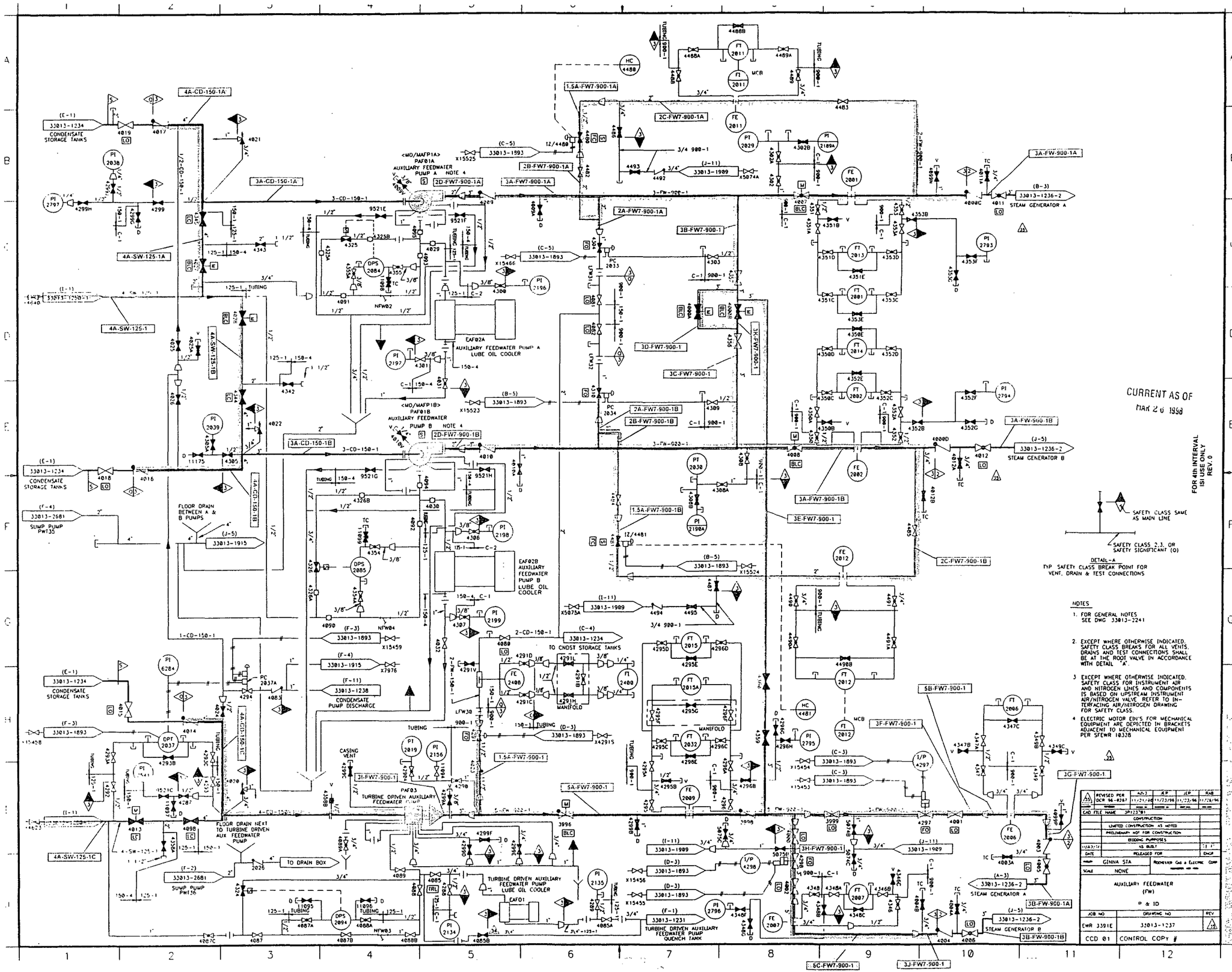
CURRENT AS OF
MAR 26 1998
FOR 4th INTERVAL ISI USE ONLY REV. 0
SAFETY CLASS SAME AS MAIN LINE
SAFETY CLASS 2,3, OR SAFETY SIGNIFICANT (O)
DETAIL-A
TYP SAFETY CLASS BREAK POINT FOR VENT, DRAIN & TEST CONNECTIONS
NOTES
1. FOR GENERAL NOTES SEE DWG 33013-2241
2. EXCEPT WHERE OTHERWISE INDICATED, SAFETY CLASS BREAKS FOR ALL VENTS, DRAINS AND TEST CONNECTIONS SHALL BE AT THE ROOT VALVE IN ACCORDANCE WITH DETAIL "A".
3. EXCEPT WHERE OTHERWISE INDICATED, SAFETY CLASS FOR INSTRUMENT AIR AND NITROGEN LINES AND COMPONENTS IS BASED ON UPSTREAM INSTRUMENT AIR/NITROGEN VALVE. REFER TO INTERFACING AIR/NITROGEN DRAWING FOR SAFETY CLASS.
4. ELECTRIC MOTOR EIN'S FOR MECHANICAL EQUIPMENT ARE DEPICTED IN BRACKETS ADJACENT TO MECHANICAL EQUIPMENT PER SFEWR 10328
CONDENSATE STORAGE TANKS
STEAM GENERATOR A
STEAM GENERATOR B
TO CNDST STORAGE TANKS
CONDENSATE PUMP DISCHARGE
SUMP PUMP PW135
SUMP PUMP PW136
FLOOR DRAIN BETWEEN A & B PUMPS
FLOOR DRAIN NEXT TO TURBINE DRIVEN AUX FEEDWATER PUMP
TO DRAIN BOX
AUXILIARY FEEDWATER PUMP A
AUXILIARY FEEDWATER PUMP B
EAF02A AUXILIARY FEEDWATER PUMP A LUBE OIL COOLER
EAF02B AUXILIARY FEEDWATER PUMP B LUBE OIL COOLER
TURBINE DRIVEN AUXILIARY FEEDWATER PUMP
TURBINE DRIVEN AUXILIARY FEEDWATER PUMP LUBE OIL COOLER
TURBINE DRIVEN AUXILIARY FEEDWATER PUMP QUENCH TANK
MANIFOLD
CASING VENT
GINNA STA
ROCHESTER GAS & ELECTRIC CORP
AUXILIARY FEEDWATER (FW)
P & ID
EWR 3391E
33013-1237
CCD 01
CONTROL COPY
AUX FEEDWATER 33013-1237 Rev. 35

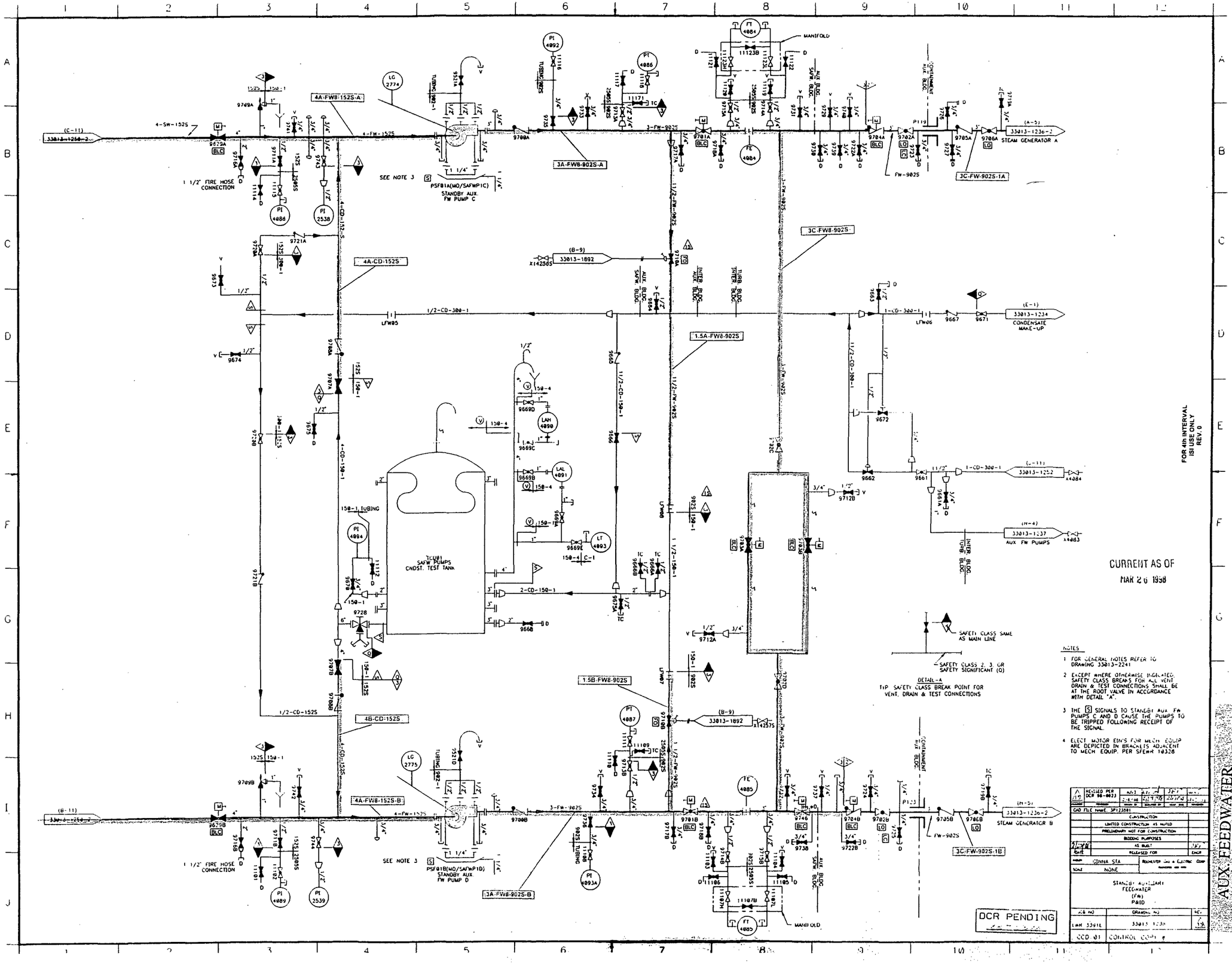
STEAM GENERATOR A
STEAM GENERATOR B
CONDENSATE MAKE-UP
AUX FW PUMPS
TCU01 SAFW PUMPS CNDST. TEST TANK
PSF01A(MO/SAFWP1C) STANDBY AUX. FW PUMP C
PSF01B(MO/SAFWP1D) STANDBY AUX FW PUMP D
1 1/2" FIRE HOSE CONNECTION
SEE NOTE 3
MANIFOLD
SAFETY CLASS SAME AS MAIN LINE
SAFETY CLASS 2, 3, OR SAFETY SIGNIFICANT (Q)
DETAIL-A
TYP SAFETY CLASS BREAK POINT FOR VENT, DRAIN & TEST CONNECTIONS
NOTES
1 FOR GENERAL NOTES REFER TO DRAWING 33013-2241
2 EXCEPT WHERE OTHERWISE INDICATED SAFETY CLASS BREAKS FOR ALL VENT DRAIN & TEST CONNECTIONS SHALL BE AT THE ROOT VALVE IN ACCORDANCE WITH DETAIL "A".
3 THE S SIGNALS TO STANDBY AUX. FW PUMPS C AND D CAUSE THE PUMPS TO BE TRIPPED FOLLOWING RECEIPT OF THE SIGNAL.
4 ELECT. MOTOR EIN'S FOR MECH. EQUIP ARE DEPICTED IN BRACKETS ADJACENT TO MECH. EQUIP. PER SFEWR 10328
CURRENT AS OF MAR 26 1998
FOR 4th INTERVAL ISI USE ONLY REV 0
DCR PENDING
GINNA STA
NONE
STANDBY AUXILIARY FEEDWATER (FW) P&ID
33013-1238
CONTROL COPY
AUX FEEDWATER
33013-1238 Rev 15

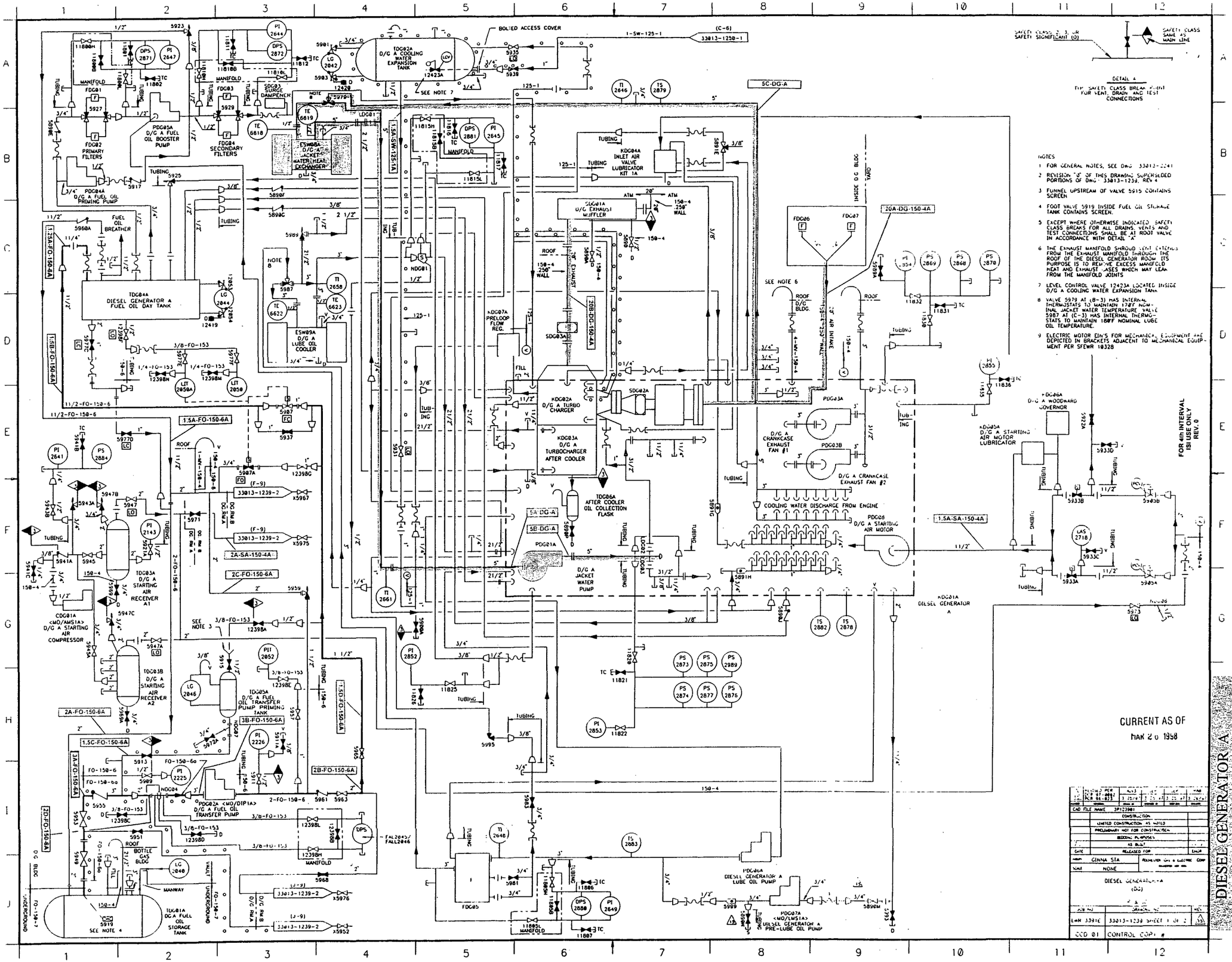
DIESEL GENERATOR A
33013-1239 Sheet 1 Rev. 15
CURRENT AS OF
MAR 20 1998
FOR 4th INTERVAL ISI USE ONLY REV. 0
NOTES
1 FOR GENERAL NOTES, SEE DWG 33013-2241
2 REVISION "A" OF THIS DRAWING SUPERSEDED PORTIONS OF DWG 33013-1239, REV 4
3 FUNNEL UPSTREAM OF VALVE 5915 CONTAINS SCREEN
4 FOOT VALVE 5919 INSIDE FUEL OIL STORAGE TANK CONTAINS SCREEN.
5 EXCEPT WHERE OTHERWISE INDICATED, SAFETY CLASS BREAKS FOR ALL DRAINS, VENTS AND TEST CONNECTIONS SHALL BE AT ROOT VALVE IN ACCORDANCE WITH DETAIL "A"
6 THE EXHAUST MANIFOLD SHROUD VENT EXTENDS FROM THE EXHAUST MANIFOLD THROUGH THE ROOF OF THE DIESEL GENERATOR ROOM ITS PURPOSE IS TO REMOVE EXCESS MANIFOLD HEAT AND EXHAUST GASES WHICH MAY LEAK FROM THE MANIFOLD JOINTS
7 LEVEL CONTROL VALVE 12423A LOCATED INSIDE D/G A COOLING WATER EXPANSION TANK
8 VALVE 5979 AT (B-3) HAS INTERNAL THERMOSTATS TO MAINTAIN 178°F NOMINAL JACKET WATER TEMPERATURE. VALVE 5987 AT (C-3) HAS INTERNAL THERMOSTATS TO MAINTAIN 180°F NOMINAL LUBE OIL TEMPERATURE.
9 ELECTRIC MOTOR EIN'S FOR MECHANICAL EQUIPMENT ARE DEPICTED IN BRACKETS ADJACENT TO MECHANICAL EQUIPMENT PER SFEWR 18328
SAFETY CLASS 2, 3, OR SAFETY SIGNIFICANT (Q)
SAFETY CLASS SAME AS MAIN LINE
DETAIL A
TYP SAFETY CLASS BREAK POINT FOR VENT, DRAIN AND TEST CONNECTIONS
TDG02A D/G A COOLING WATER EXPANSION TANK
BOLTED ACCESS COVER
TDG04A DIESEL GENERATOR A FUEL OIL DAY TANK
PDG05A D/G A FUEL OIL BOOSTER PUMP
PDG04A D/G A FUEL OIL PRIMING PUMP
FDG01 FDG02 FDG03 FDG04
ESW09A D/G A LUBE OIL COOLER
ESW08A D/G A JACKET WATER HEAT EXCHANGER
KDG04A INLET AIR VALVE LUBRICATOR KIT 1A
KDG01A D/G EXHAUST MUFFLER
KDG07A PRELOOP FLOW REG.
KDG02A D/G A TURBO CHARGER
KDG03A D/G A TURBOCHARGER AFTER COOLER
TDG06A AFTER COOLER OIL COLLECTION FLASK
PDG01A D/G A JACKET WATER PUMP
PDG03A D/G A CRANKCASE EXHAUST FAN #1
PDG03B D/G A CRANKCASE EXHAUST FAN #2
COOLING WATER DISCHARGE FROM ENGINE
PDG08 D/G A STARTING AIR MOTOR
KDG05A D/G A STARTING AIR MOTOR LUBRICATOR
PDG06A D/G A WOODWARD GOVERNOR
KDG01A DIESEL GENERATOR A
TDG03A D/G A STARTING AIR RECEIVER A1
TDG03B D/G A STARTING AIR RECEIVER A2
CDG01A <MO/AMS1A> D/G A STARTING AIR COMPRESSOR
TDG05A D/G A FUEL OIL TRANSFER PUMP PRIMING TANK
PDG02A <MO/DIP1A> D/G A FUEL OIL TRANSFER PUMP
TUG01A D/G A FUEL OIL STORAGE TANK
PDG06A DIESEL GENERATOR A LUBE OIL PUMP
PDG07A <MO/LMS1A> DIESEL GENERATOR A PRE-LUBE OIL PUMP
SC-DG-A
20A-DG-150-4A
1.5A-SA-150-4A
1.5A-FO-150-6A
1.5B-FO-150-6A
1.5C-FO-150-6A
2A-FO-150-6A
2B-FO-150-6A
2C-FO-150-6A
2D-FO-150-6A
3A-FO-150-6A
3B-FO-150-6A
2A-SA-150-4A
5A-DG-A
5B-DG-A
CAD FILE NAME 3P123981
CONSTRUCTION
LIMITED CONSTRUCTION AS NOTED
PRELIMINARY NOT FOR CONSTRUCTION
DESIGN PURPOSES
AS BUILT
RELEASED FOR
GINNA STA
NONE
DIESEL GENERATOR A
(DG)
33013-1239 SHEET 1 OF 2
CCD 01
CONTROL COPY #

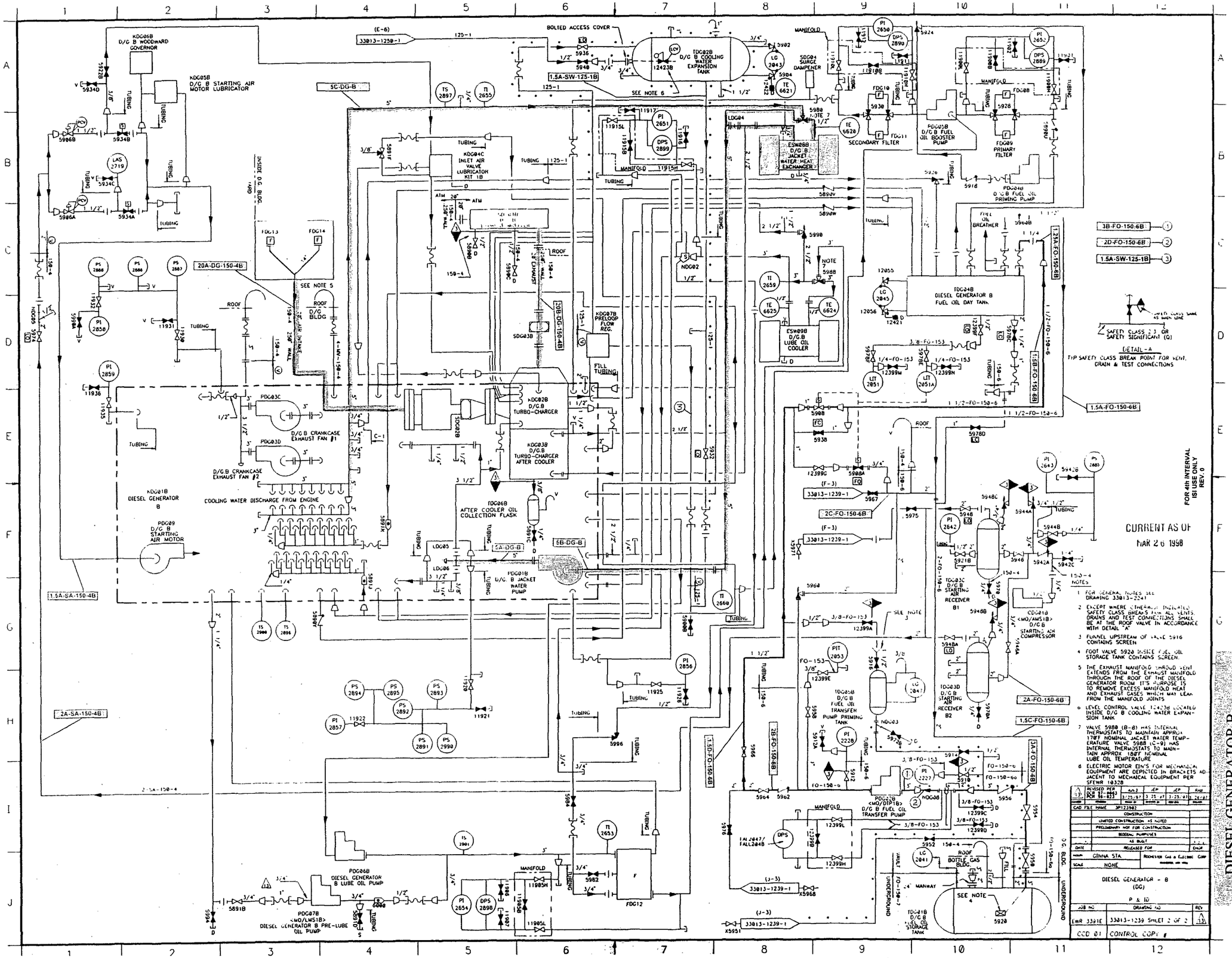

DIESEL GENERATOR B
33013-1239 Sheet 2 Rev. 13

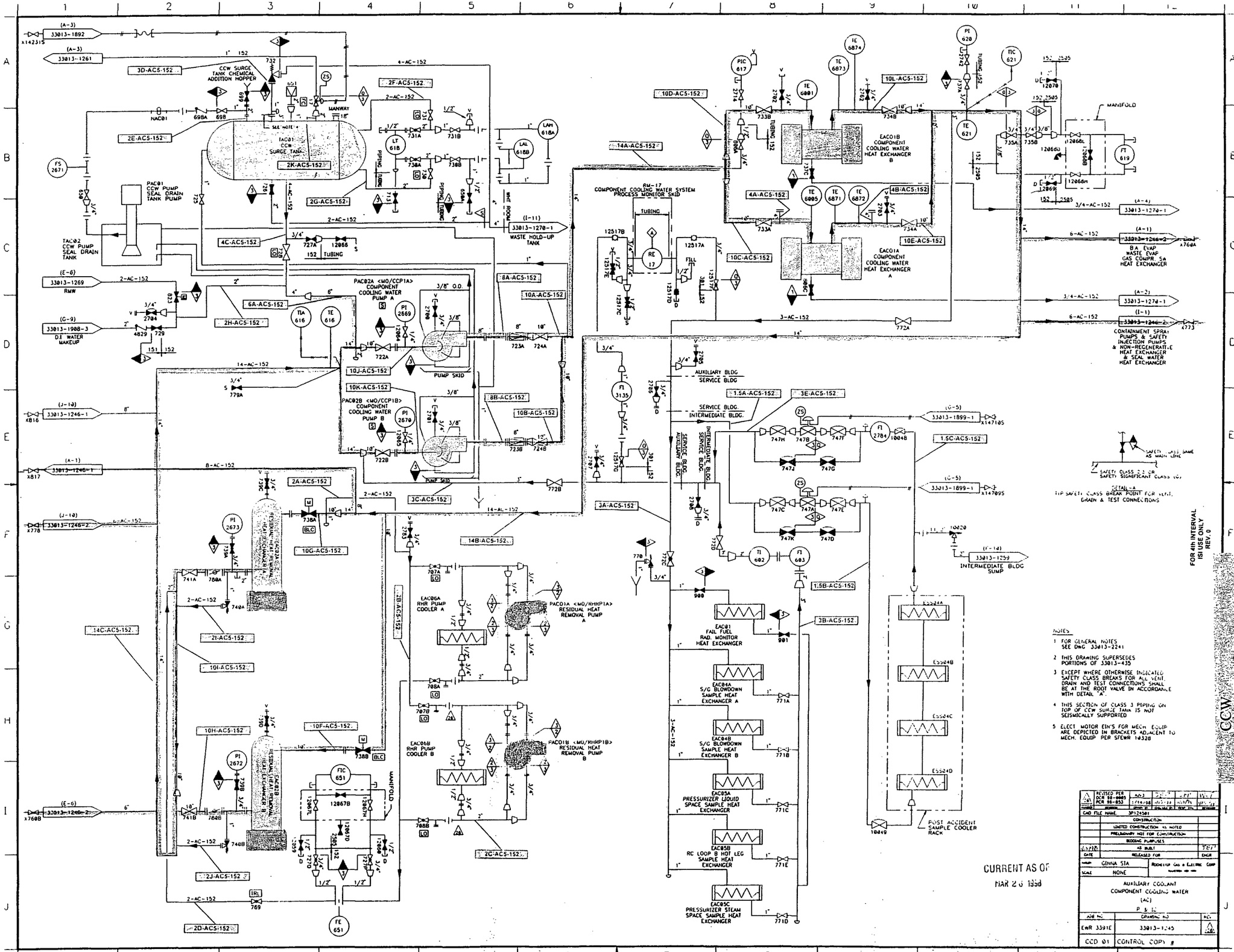
CCW SURGE TANK CHEMICAL ADDITION HOPPER
TAC01 CCW SURGE TANK
PAC01 CCW PUMP SEAL DRAIN TANK PUMP
TAC02 CCW PUMP SEAL DRAIN TANK
WASTE HOLD-UP TANK
PAC02A <MO/CCP1A> COMPONENT COOLING WATER PUMP A
PAC02B <MO/CCP1B> COMPONENT COOLING WATER PUMP B
PUMP SKID
RESIDUAL HEAT REMOVAL HEAT EXCHANGER A
RESIDUAL HEAT REMOVAL HEAT EXCHANGER B
EAC06A RHR PUMP COOLER A
EAC06B RHR PUMP COOLER B
PAC01A <MO/RHRP1A> RESIDUAL HEAT REMOVAL PUMP A
PAC01B <MO/RHRP1B> RESIDUAL HEAT REMOVAL PUMP B
RM-17 COMPONENT COOLING WATER SYSTEM PROCESS MONITOR SKID
EAC01B COMPONENT COOLING WATER HEAT EXCHANGER B
EAC01A COMPONENT COOLING WATER HEAT EXCHANGER A
MANIFOLD
AUXILIARY BLDG
SERVICE BLDG
INTERMEDIATE BLDG
EAC01 FAIL FUEL RAD. MONITOR HEAT EXCHANGER
EAC04A S/G BLOWDOWN SAMPLE HEAT EXCHANGER A
EAC04B S/G BLOWDOWN SAMPLE HEAT EXCHANGER B
EAC05A PRESSURIZER LIQUID SPACE SAMPLE HEAT EXCHANGER
EAC05B RC LOOP B HOT LEG SAMPLE HEAT EXCHANGER
EAC05C PRESSURIZER STEAM SPACE SAMPLE HEAT EXCHANGER
INTERMEDIATE BLDG SUMP
POST ACCIDENT SAMPLE COOLER RACK
B.A. EVAP WASTE EVAP GAS COMPR. SA HEAT EXCHANGER
CONTAINMENT SPRAY PUMPS & SAFETY INJECTION PUMPS & NON-REGENERATIVE HEAT EXCHANGER & SEAL WATER HEAT EXCHANGER
DETAIL-A
TYP SAFETY CLASS BREAK POINT FOR VENT, DRAIN & TEST CONNECTIONS
NOTES
1 FOR GENERAL NOTES SEE DWG 33013-2241
2 THIS DRAWING SUPERSEDES PORTIONS OF 33013-435
3 EXCEPT WHERE OTHERWISE INDICATED SAFETY CLASS BREAKS FOR ALL VENT, DRAIN AND TEST CONNECTIONS SHALL BE AT THE ROOT VALVE IN ACCORDANCE WITH DETAIL "A".
4 THIS SECTION OF CLASS 3 PIPING ON TOP OF CCW SURGE TANK IS NOT SEISMICALLY SUPPORTED
5 ELECT MOTOR EIN'S FOR MECH EQUIP ARE DEPICTED IN BRACKETS ADJACENT TO MECH. EQUIP PER SEWR 10328
CURRENT AS OF MAR 26 1998
FOR 4th INTERVAL ISI USE ONLY REV. 0
CCW 33013-1245 Rev.26
CAD FILE NAME 3P12501
CONSTRUCTION
LIMITED CONSTRUCTION AS NOTED
PRELIMINARY NOT FOR CONSTRUCTION
BIDDING PURPOSES
AS BUILT
RELEASED FOR
GINNA STA
ROCHESTER GAS & ELECTRIC CORP
SCALE NONE
AUXILIARY COOLANT
COMPONENT COOLING WATER
(AC)
P & ID
JOB NO EWR 3391E
DRAWING NO 33013-1245
CCD 01 CONTROL COPY #

NOTES

1. FOR GENERAL NOTES REFER TO DRAWING 33013-2241
2. REVISION "8" OF THIS DRAWING SUPERSEDES PORTIONS OF 33013-1246 REV. 5
3. EXCEPT WHERE OTHERWISE INDICATED SAFETY CLASS BREAKS FOR ALL VENT DRAIN AND TEST CONNECTIONS SHALL BE AT THE ROOT VALVE IN ACCORDANCE WITH DETAIL "A".
4. EXCEPT WHERE OTHERWISE INDICATED, SAFETY CLASS FOR INSTRUMENT AIR AND NITROGEN LINES AND COMPONENTS IS BASED ON UPSTREAM INSTRUMENT AIR/NITROGEN VALVE. REFER TO INTERFACING AIR/NITROGEN DRAWING FOR SAFETY CLASS.
5. CHECK VALVE 743A INTERNALS PERMANENTLY REMOVED
6. RCP UPPER BEARING COOLERS ARE SUPPLIED WITH MOTORS SHELL-SIDE PRESSURE BOUNDARY IS NON-CLASS. TUBE SIDE CLASS IS THE SAME AS CONNECTING PIPING.
7. COMPONENT COOLING WATER FOR MOTORS CLASS RATING EXTENDS THROUGHOUT CLOSED COOLING COIL
8. COMPONENT COOLING WATER FOR PUMPS COOLING COIL AND THERMAL BARRIER ARE CLASS 1 CLASS BREAK FROM CLASS 1 TO CLASS 2 OCCURS AT CCW PIPE INTERFACE WITH COOLING COIL.
9. ELECTRIC MOTOR EIN'S FOR MECHANICAL EQUIPMENT ARE DEPICTED IN BRACKETS ADJACENT TO MECHANICAL EQUIPMENT PER SFEWR 10328

FOR 4th INTERVAL ISI USE ONLY REV. 0

CURRENT AS OF MAR 26 1998

3	REVISED PER SFEWR 10328	AJS	at 1/6/97	at 1/6/97	HAR 1/7/97
2					
1					
0					
CAD FILE NAME	SP124681				
	CONSTRUCTION				
	LIMITED CONSTRUCTION AS NOTED				
	PRELIMINARY NOT FOR CONSTRUCTION				
	BIDDING PURPOSES				
11/8/91	AS BUILT				
DATE	RELEASED FOR				CHGR
DRAWN	CINTHIA STA.	ROCKWELL INT'L & ELECTRIC CORP			
SCALE	NONE				

AUXILIARY COOLANT
COMPONENT COOLING WATER
(AC)

JOB NO	DRAWING NO	REV
EWR 3391E	33013-1246 SHEET 1 OF 2	3
CCD 31	CONTROL COPY #	

CCW
33013-1246 Sheet 1 Rev. 9

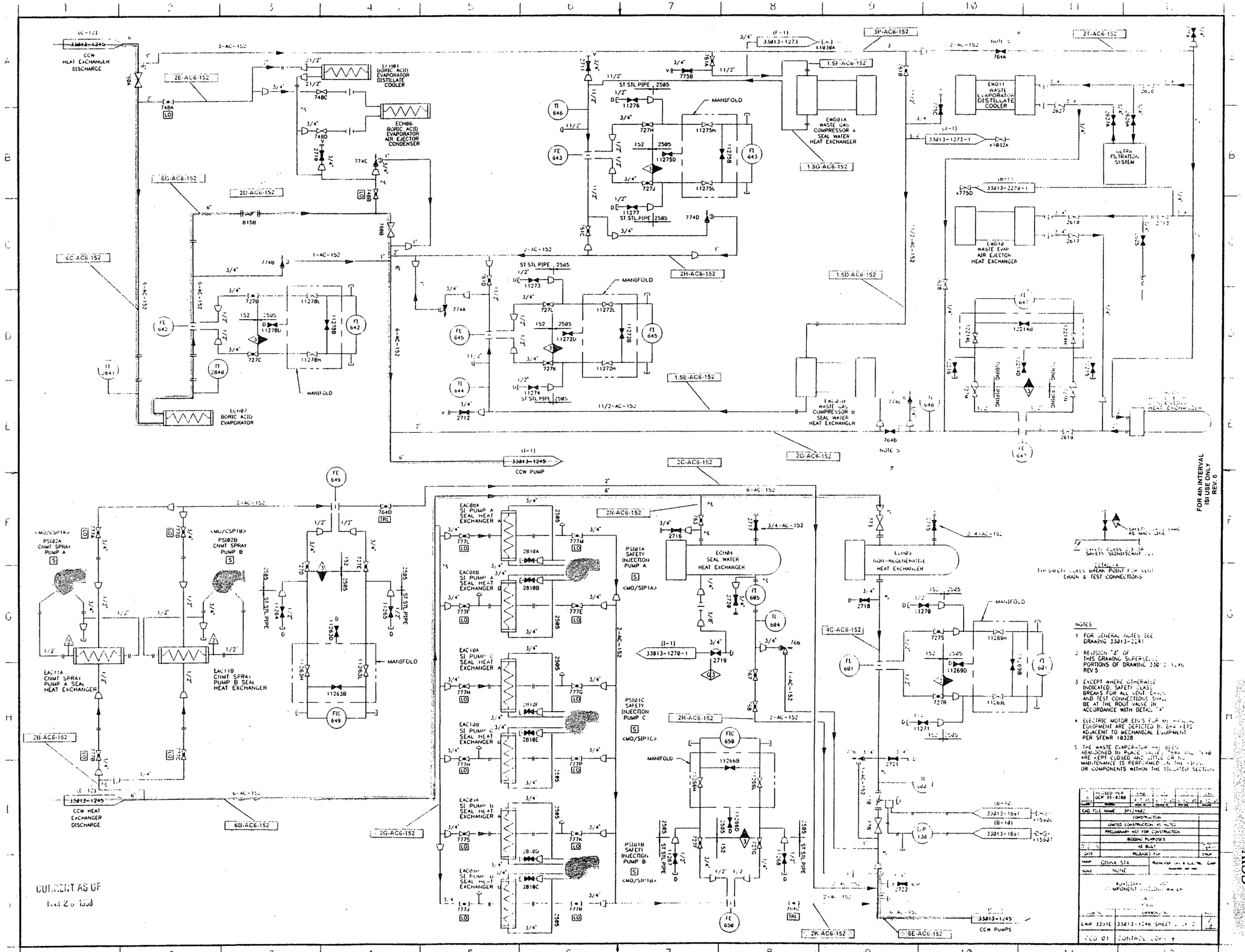

CCW
33013-1246 Sheet 2 Rev. 8

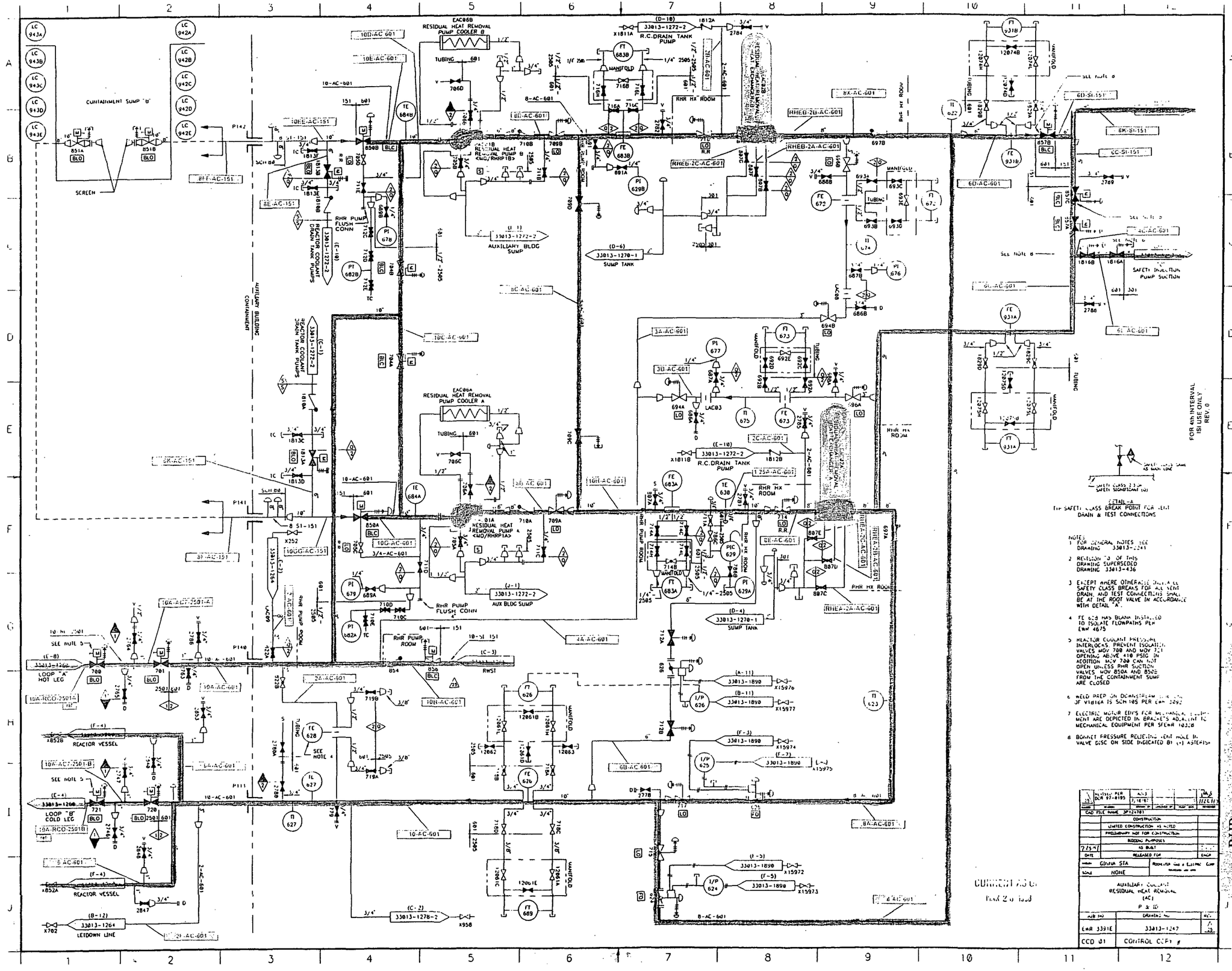
CONTAINMENT SUMP "B"
SCREEN
EAC06B RESIDUAL HEAT REMOVAL PUMP COOLER B
EAC06A RESIDUAL HEAT REMOVAL PUMP COOLER A
R.C.DRAIN TANK PUMP
SUMP TANK
AUXILIARY BLDG SUMP
RHR PUMP FLUSH CONN
RHR HX ROOM
RHR PUMP ROOM
AUXILIARY BUILDING
CONTAINMENT
LOOP "A" HOT LEG
LOOP "B" COLD LEG
REACTOR VESSEL
LETDOWN LINE
RWST
SAFETY INJECTION PUMP SUCTION
SEE NOTE 5
SEE NOTE 4
SEE NOTE 8
DETAIL A
THE SAFETY CLASS BREAK POINT FOR ALL DRAIN & TEST CONNECTIONS
NOTES:
1 FOR GENERAL NOTES SEE DRAWING 33013-1241
2 REVISION 10 OF THIS DRAWING SUPERSEDED DRAWING 33013-436
3 EXCEPT WHERE OTHERWISE INDICATED SAFETY CLASS BREAKS FOR ALL VENT DRAIN, AND TEST CONNECTIONS SHALL BE AT THE ROOT VALVE IN ACCORDANCE WITH DETAIL "A".
4 FE 628 HAS BLANK INSTALLED TO ISOLATE FLOWPATHS PER EWR 4675
5 REACTOR COOLANT PRESSURE INTERLOCKS PREVENT ISOLATION VALVES MOV 700 AND MOV 701 OPENING ABOVE 410 PSIG IN ADDITION MOV 700 CAN NOT OPEN UNLESS RHR SUCTION VALVES MOV 850A AND 850B FROM THE CONTAINMENT SUMP ARE CLOSED
6 WELD PREP ON DOWNSTREAM END OF V1816A IS SCH 160 PER EWR 2692
7 ELECTRIC MOTOR EDITS FOR MECHANICAL EQUIPMENT ARE DEPICTED IN BRACKETS ADJACENT TO MECHANICAL EQUIPMENT PER SFEWR 10328
8 BONNET PRESSURE RELIEVING VENT HOLE IN VALVE DISC ON SIDE INDICATED BY (+) ASTERISK
FOR 4th INTERVAL ISI USE ONLY REV. 0
CAD FILE NAME SP12-781
CONSTRUCTION
LIMITED CONSTRUCTION AS NOTED
PRELIMINARY NOT FOR CONSTRUCTION
REGULATORY PURPOSES
AS BUILT
RELEASED FOR
GINNA STA
NONE
AUXILIARY COOLANT
RESIDUAL HEAT REMOVAL
(AC)
P & ID
EWR 3331E
33013-1247
CCD 01
CONTROL COPY
CURRENT AS OF
RHR
33013-1247 Rev. 25

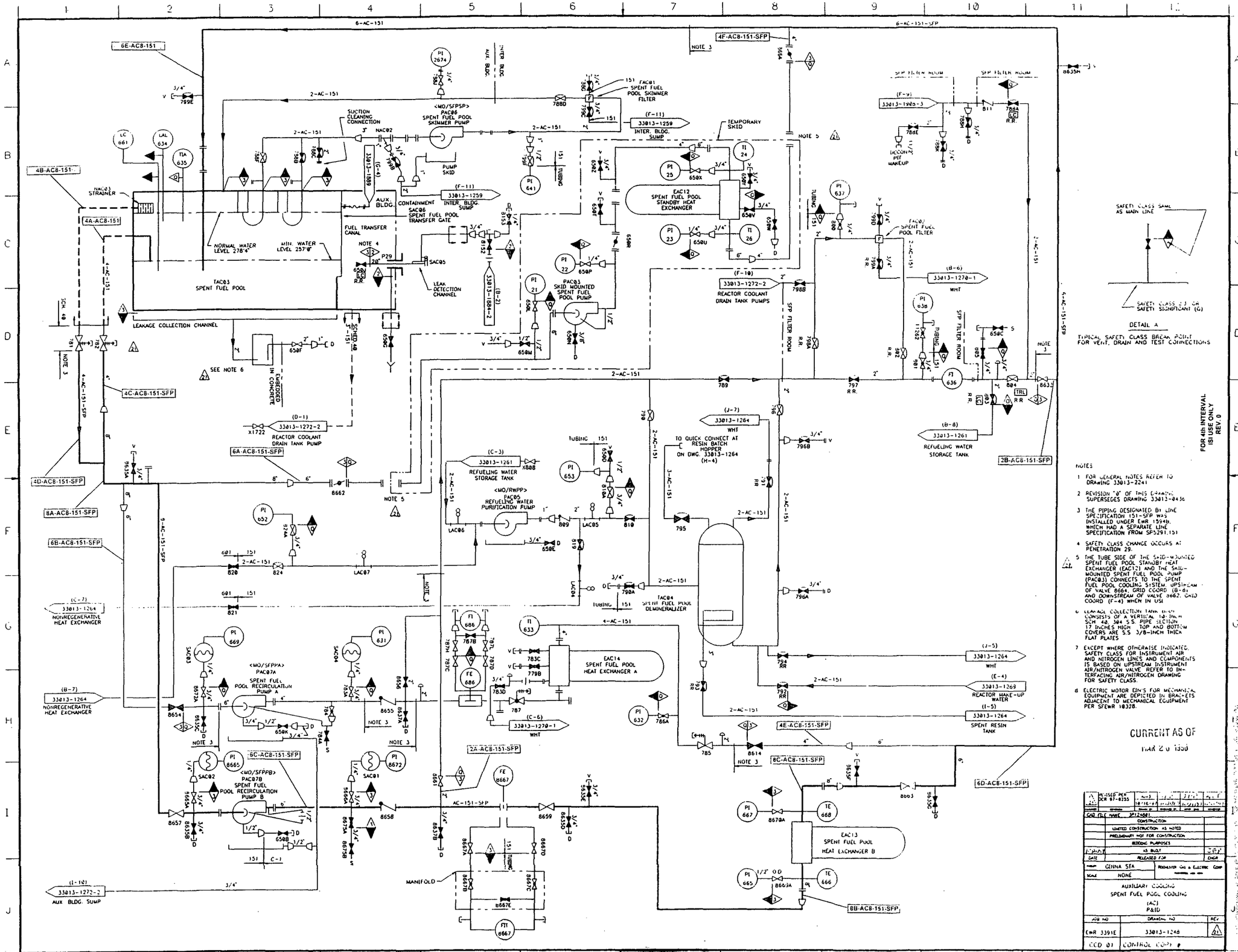
6-AC-151
6-AC-151-SFP
6E-AC8-151
4F-AC8-151-SFP
NOTE 3
2-AC-151
SUCTION CLEANING CONNECTION
NAC02
<MO/SFPSP>
PAC06
SPENT FUEL POOL SKIMMER PUMP
PAC08
SPENT FUEL POOL SKIMMER FILTER
(F-11)
33013-1259
INTER. BLDG. SUMP
TEMPORARY SKID
NOTE 5
4B-AC8-151
NAC03 STRAINER
4A-AC8-151
PUMP SKID
AUX. BLDG.
CONTAINMENT
SAC06
SPENT FUEL POOL TRANSFER GATE
FUEL TRANSFER CANAL
NORMAL WATER LEVEL 278'4"
MIN. WATER LEVEL 257'6"
NOTE 4
SAC05
LEAK DETECTION CHANNEL
TAC03
SPENT FUEL POOL
LEAKAGE COLLECTION CHANNEL
SEE NOTE 6
4-AC-151
4-AC-151-SFP
4C-AC8-151-SFP
4D-AC8-151-SFP
8A-AC8-151-SFP
6B-AC8-151-SFP
(D-1)
33013-1272-2
REACTOR COOLANT DRAIN TANK PUMP
6A-AC8-151-SFP
NOTE 5
(C-3)
33013-1261
REFUELING WATER STORAGE TANK
<MO/RWPP>
PAC05
REFUELING WATER PURIFICATION PUMP
LAC06
LAC05
LAC07
LAC04
(C-7)
33013-1264
NONREGENERATIVE HEAT EXCHANGER
(B-7)
33013-1264
NONREGENERATIVE HEAT EXCHANGER
<MO/SFPPA>
PAC07A
SPENT FUEL POOL RECIRCULATION PUMP A
<MO/SFPPB>
PAC07B
SPENT FUEL POOL RECIRCULATION PUMP B
6C-AC8-151-SFP
(I-10)
33013-1272-2
AUX. BLDG. SUMP
EAC12
SPENT FUEL POOL STANDBY HEAT EXCHANGER
TAC04
SPENT FUEL POOL DEMINERALIZER
EAC14
SPENT FUEL POOL HEAT EXCHANGER A
(C-6)
33013-1270-1
WHT
2A-AC8-151-SFP
MANIFOLD
(F-10)
33013-1272-2
REACTOR COOLANT DRAIN TANK PUMPS
PAC03
SKID MOUNTED SPENT FUEL POOL PUMP
(J-7)
33013-1264
WHT
TO QUICK CONNECT AT RESIN BATCH HOPPER ON DWG. 33013-1264 (H-4)
4E-AC8-151-SFP
8C-AC8-151-SFP
EAC13
SPENT FUEL POOL HEAT EXCHANGER B
8B-AC8-151-SFP
6D-AC8-151-SFP
(J-5)
33013-1264
WHT
(E-4)
33013-1269
REACTOR MAKE-UP WATER
(I-5)
33013-1264
SPENT RESIN TANK
(B-6)
33013-1270-1
WHT
(B-8)
33013-1261
REFUELING WATER STORAGE TANK
2B-AC8-151-SFP
SFP FILTER ROOM
DECONTM PIT MAKEUP
SAFETY CLASS SAME AS MAIN LINE
SAFETY CLASS 3.3 OR SAFETY SIGNIFICANT (G)
DETAIL A
TYPICAL SAFETY CLASS BREAK POINT FOR VENT, DRAIN AND TEST CONNECTIONS
FOR 4th INTERVAL ISI USE ONLY REV. 0
NOTES
1 FOR GENERAL NOTES REFER TO DRAWING 33013-2241
2 REVISION "0" OF THIS DRAWING SUPERSEDES DRAWING 33013-0436
3 THE PIPING DESIGNATED BY LINE SPECIFICATION 151-SFP WAS INSTALLED UNDER EWR 15949, WHICH HAD A SEPARATE LINE SPECIFICATION FROM SP5291.151
4 SAFETY CLASS CHANGE OCCURS AT PENETRATION 29.
5 THE TUBE SIDE OF THE SKID-MOUNTED SPENT FUEL POOL STANDBY HEAT EXCHANGER (EAC12) AND THE SKID-MOUNTED SPENT FUEL POOL PUMP (PAC03) CONNECTS TO THE SPENT FUEL POOL COOLING SYSTEM. UPSTREAM OF VALVE 8664, GRID COORD (B-8) AND DOWNSTREAM OF VALVE 8662, GRID COORD (F-4) WHEN IN USE
6 LEAKAGE COLLECTION TANK (LCT) CONSISTS OF A VERTICAL 18-INCH SCH 40, 304 S.S. PIPE SECTION, 17 INCHES HIGH. TOP AND BOTTOM COVERS ARE S.S. 3/8-INCH THICK FLAT PLATES
7 EXCEPT WHERE OTHERWISE INDICATED, SAFETY CLASS FOR INSTRUMENT AIR AND NITROGEN LINES AND COMPONENTS IS BASED ON UPSTREAM INSTRUMENT AIR/NITROGEN VALVE. REFER TO INTERFACING AIR/NITROGEN DRAWING FOR SAFETY CLASS.
8 ELECTRIC MOTOR EIN'S FOR MECHANICAL EQUIPMENT ARE DEPICTED IN BRACKETS ADJACENT TO MECHANICAL EQUIPMENT PER SFEWR 18328.
CURRENT AS OF
MAR 2 0 1998
REVISED PER DCR 97-0255
CAD FILE NAME SP12-0081
CONSTRUCTION
LIMITED CONSTRUCTION AS NOTED
PRELIMINARY NOT FOR CONSTRUCTION
BIDDING PURPOSES
AS BUILT
RELEASED FOR
CHKR
GINNA STA
ROCHESTER GAS & ELECTRIC CORP
NONE
AUXILIARY COOLING
SPENT FUEL POOL COOLING
(AC)
P&ID
JOB NO
DRAWING NO
REV
EWR 3391E
33013-1248
CCD 01
CONTROL COPY
AC SPENT FUEL POOL
33013-1248 Rev. 21

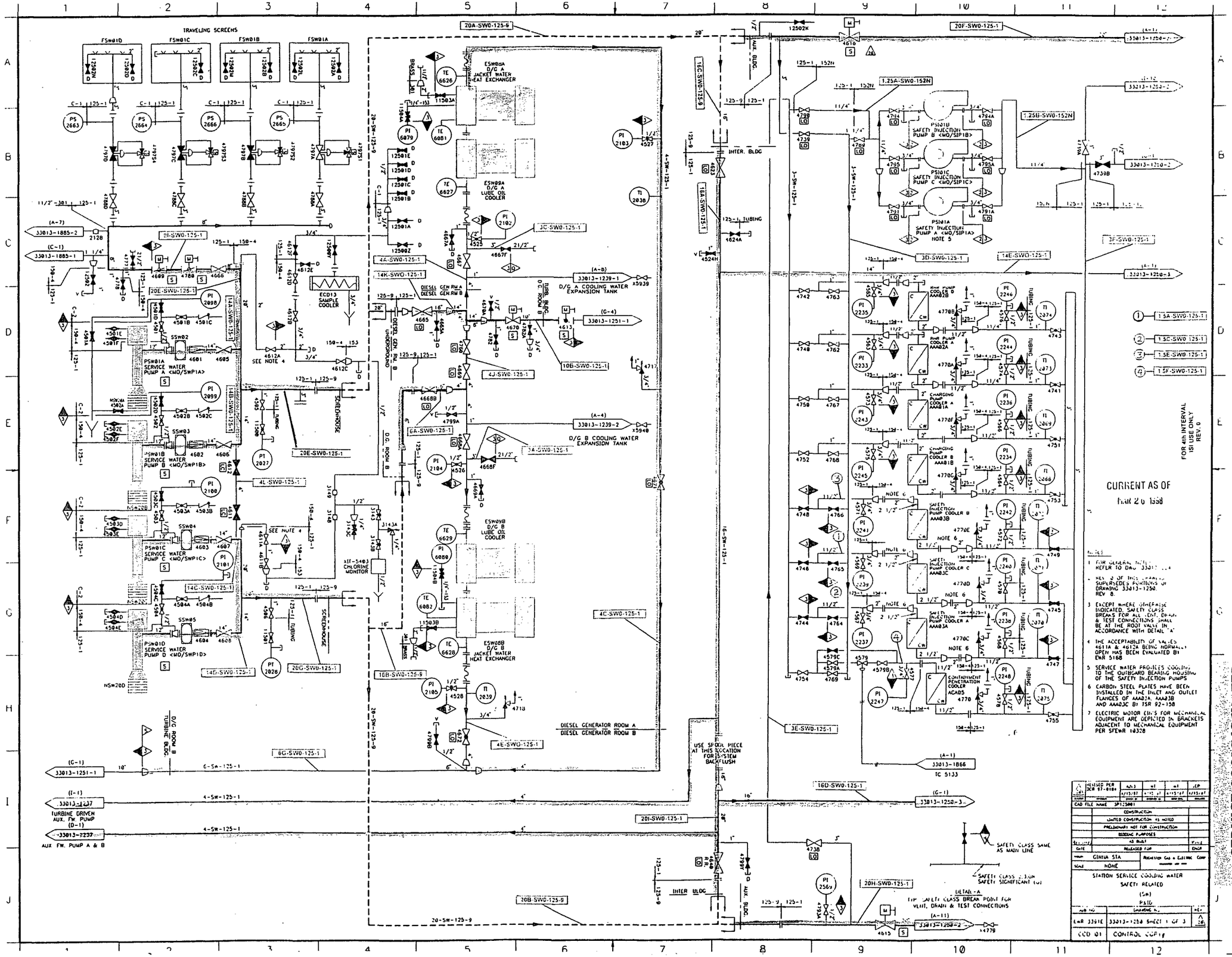

SERVICE COOLING WATER
33013-1250 Sheet 1 Rev.26

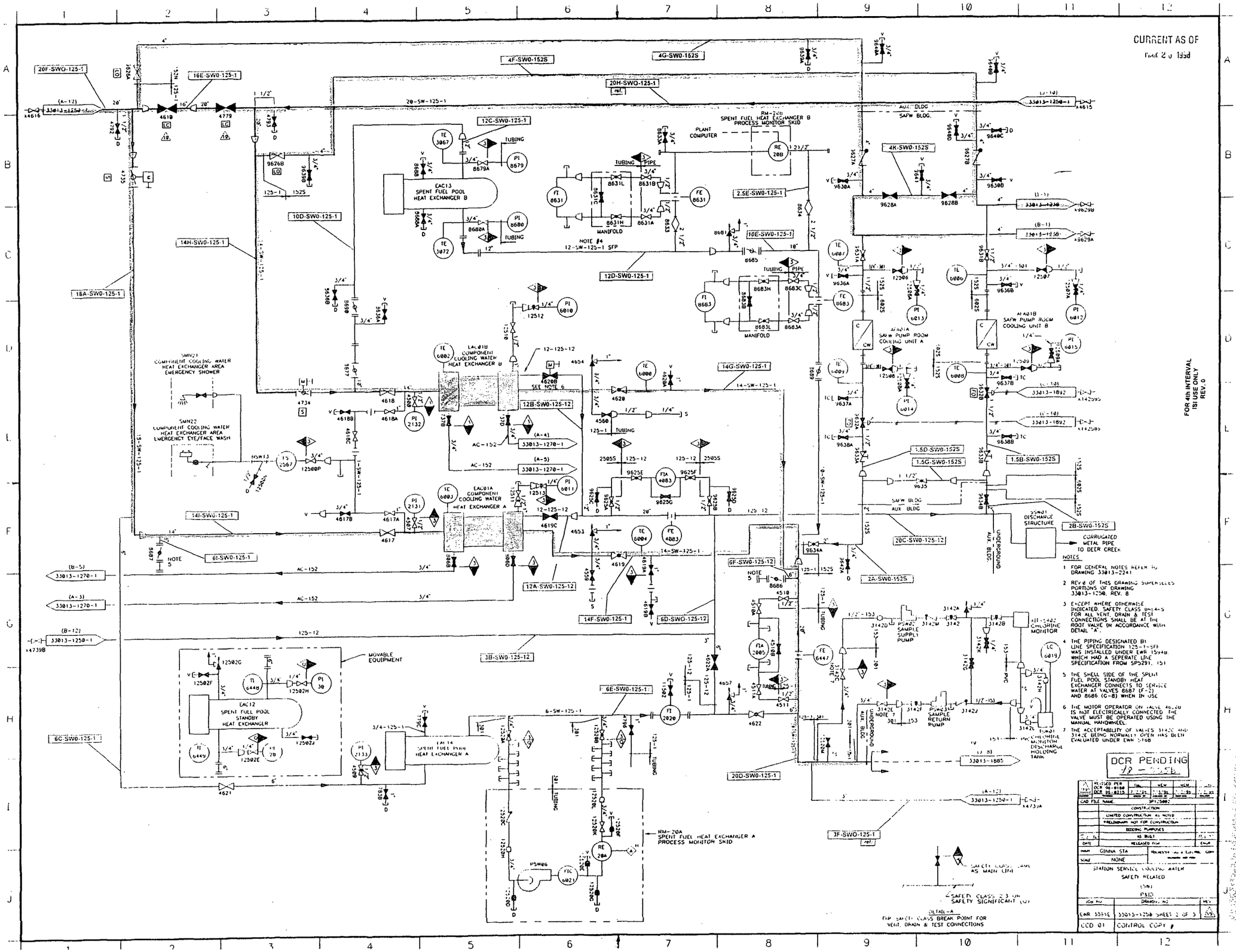

NOTES

1. FOR GENERAL NOTES REFER TO DRAWING 33013-2241
2. REV 2 OF THIS DRAWING SUPERSEDES PORTIONS OF DRAWING 33013-1250, REV. 8
3. EXCEPT WHERE OTHERWISE INDICATED, SAFETY CLASS BREAKS FOR ALL VENT, DRAIN & TEST CONNECTIONS SHALL BE AT THE ROOT VALVE IN ACCORDANCE WITH DETAIL "A".
4. THE PIPING DESIGNATED BY LINE SPECIFICATION 125-1-SFF WAS INSTALLED UNDER EWR 15948 WHICH HAD A SEPERATE LINE SPECIFICATION FROM SP5291, 151
5. THE SHELL SIDE OF THE SPENT FUEL POOL STANDBY HEAT EXCHANGER CONNECTS TO SERVICE WATER AT VALVES 8687 (F-2) AND 8686 (G-8) WHEN IN USE
6. THE MOTOR OPERATOR ON VALVE 4620 IS NOT ELECTRICALLY CONNECTED THE VALVE MUST BE OPERATED USING THE MANUAL HANDWHEEL.
7. THE ACCEPTABILITY OF VALVES 3142C AND 3142E BEING NORMALLY OPEN HAS BEEN EVALUATED UNDER EWR 3188

REV	REVISED PER	DRN	VERIFIED	APPROVED	DATE
2	DCR 96-0188				
1	DCR 95-0215				

CAD FILE NAME: SP1-5082

CONSTRUCTION
LIMITED CONSTRUCTION AS NOTED
PRELIMINARY NOT FOR CONSTRUCTION
BIDDING PURPOSES
AS BUILT
RELEASED FOR

JOB NO.	DRAWING NO.	REV.
EWR 5551E	33013-1250 SHEET 2 OF 3	19
CCD 01	CONTROL COPY	

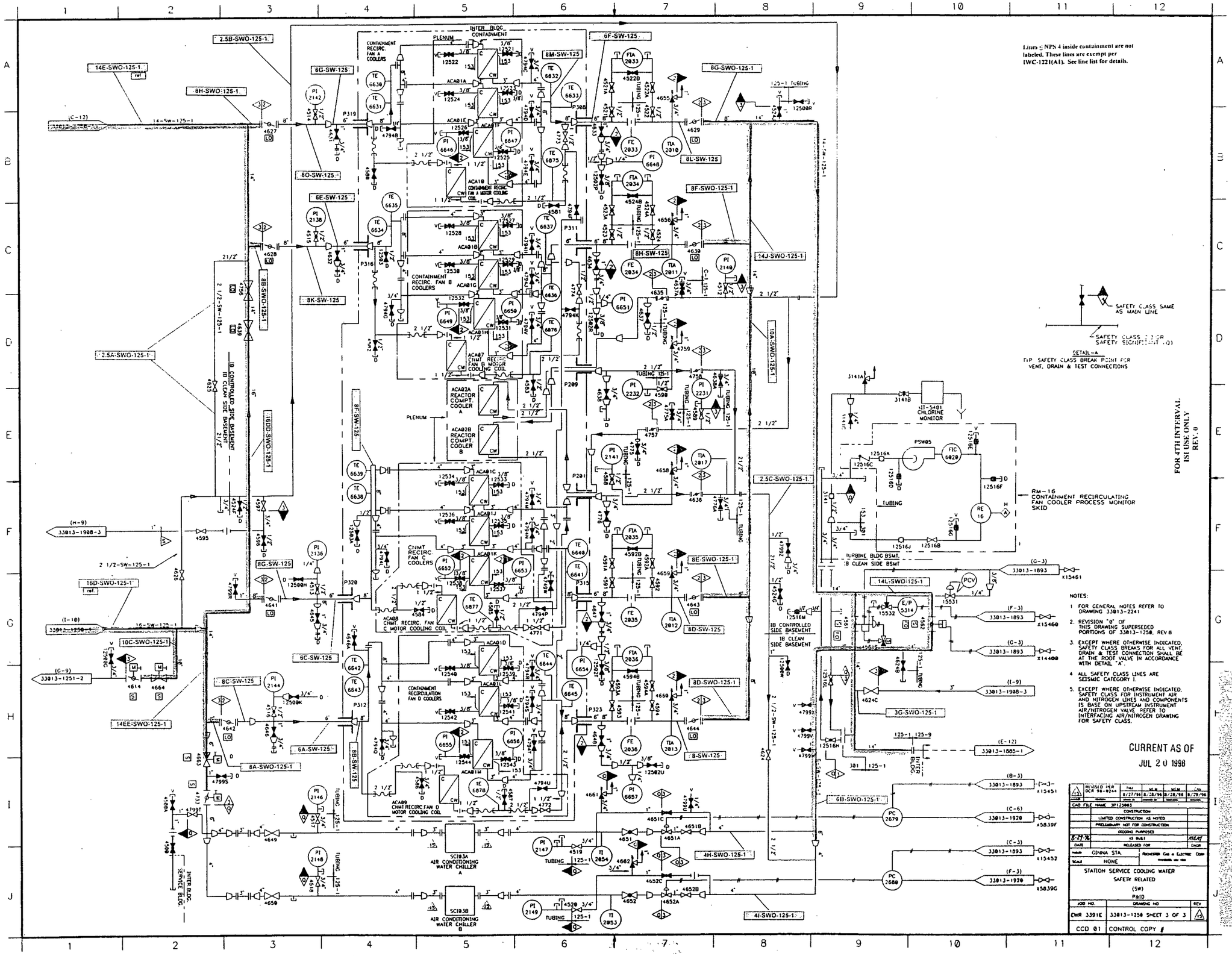
Lines ≤ NPS 4 inside containment are not labeled. These lines are exempt per IWC-1221(A1). See line list for details.
FOR 4TH INTERVAL IST USE ONLY REV. 0
SAFETY CLASS SAME AS MAIN LINE
DETAIL-A
TYP. SAFETY CLASS BREAK POINT FOR VENT, DRAIN & TEST CONNECTIONS
RM-16 CONTAINMENT RECIRCULATING FAN COOLER PROCESS MONITOR SKID
NOTES:
1. FOR GENERAL NOTES REFER TO DRAWING 33013-2241
2. REVISION "B" OF THIS DRAWING SUPERSEDED PORTIONS OF 33013-1250, REV 6
3. EXCEPT WHERE OTHERWISE INDICATED, SAFETY CLASS BREAKS FOR ALL VENT, DRAIN & TEST CONNECTION SHALL BE AT THE ROOT VALVE IN ACCORDANCE WITH DETAIL "A".
4. ALL SAFETY CLASS LINES ARE SEISMIC CATEGORY I.
5. EXCEPT WHERE OTHERWISE INDICATED, SAFETY CLASS FOR INSTRUMENT AIR AND NITROGEN LINES AND COMPONENTS IS BASE ON UPSTREAM INSTRUMENT AIR/NITROGEN VALVE. REFER TO INTERFACING AIR/NITROGEN DRAWING FOR SAFETY CLASS.
CURRENT AS OF JUL 20 1998
CAD FILE NAME: SP12983
CONSTRUCTION
LIMITED CONSTRUCTION AS NOTED
PRELIMINARY NOT FOR CONSTRUCTION
DESIGN PURPOSES
AS BUILT
DATE
RELEASED FOR
DRAWN GINNA STA.
ROCHESTER GAS & ELECTRIC CORP.
SCALE NONE
STATION SERVICE COOLING WATER
SAFETY RELATED
(SW)
P&ID
JOB NO. EWR 3391E
DRAWING NO 33013-1250 SHEET 3 OF 3
REV 3
CCD 01 CONTROL COPY
SERVICE COOLING WATER
33013-1250 Sheet 3 Rev. 15

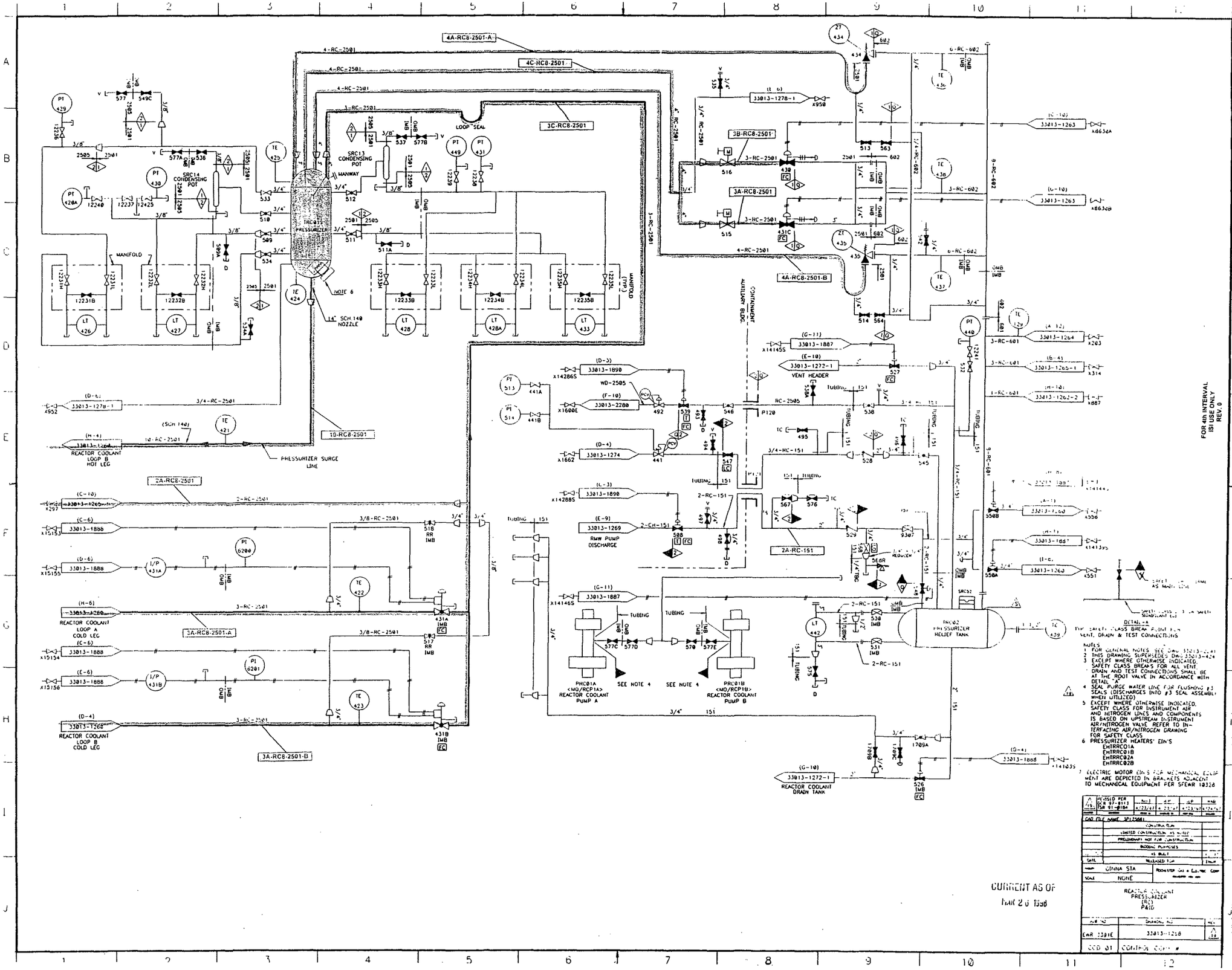
4A-RC8-2501-A
4C-RC8-2501
3C-RC8-2501
3B-RC8-2501
3A-RC8-2501
4A-RC8-2501-B
10-RC8-2501
2A-RC8-2501
3A-RC8-2501-A
3A-RC8-2501-B
LOOP SEAL
SRC13 CONDENSING POT
SRC14 CONDENSING POT
MANWAY
MANIFOLD
NOTE 6
14" SCH 140 NOZZLE
PRESSURIZER SURGE LINE
REACTOR COOLANT LOOP B HOT LEG
REACTOR COOLANT LOOP A COLD LEG
REACTOR COOLANT LOOP B COLD LEG
RMW PUMP DISCHARGE
VENT HEADER
CONTAINMENT AUXILIARY BLDG.
PHC01A <MO/RCP1A> REACTOR COOLANT PUMP A
PRC01B <MO/RCP1B> REACTOR COOLANT PUMP B
SEE NOTE 4
PHC02 PRESSURIZER RELIEF TANK
REACTOR COOLANT DRAIN TANK
DETAIL "A"
TYP SAFETY CLASS BREAK POINT FOR VENT, DRAIN & TEST CONNECTIONS
NOTES
1 FOR GENERAL NOTES SEE DWG 33013-0241
2 THIS DRAWING SUPERSEDES DWG 33013-424
3 EXCEPT WHERE OTHERWISE INDICATED, SAFETY CLASS BREAKS FOR ALL VENT, DRAIN AND TEST CONNECTIONS SHALL BE AT THE ROOT VALVE IN ACCORDANCE WITH DETAIL "A"
4 SEAL PURGE WATER LINE FOR FLUSHING #3 SEALS (DISCHARGES INTO #3 SEAL ASSEMBLY WHEN UTILIZED)
5 EXCEPT WHERE OTHERWISE INDICATED, SAFETY CLASS FOR INSTRUMENT AIR AND NITROGEN LINES AND COMPONENTS IS BASED ON UPSTREAM INSTRUMENT AIR/NITROGEN VALVE REFER TO INTERFACING AIR/NITROGEN DRAWING FOR SAFETY CLASS
6 PRESSURIZER HEATERS' EIN'S
EHTRRC01A
EHTRRC01B
EHTRRC02A
EHTRRC02B
7 ELECTRIC MOTOR EIN'S FOR MECHANICAL EQUIPMENT ARE DEPICTED IN BRACKETS ADJACENT TO MECHANICAL EQUIPMENT PER SPEMR 10328
CURRENT AS OF
MAR 26 1998
FOR 4th INTERVAL ISI USE ONLY REV. 0
CONSTRUCTION
LIMITED CONSTRUCTION AS-BUILT
PRELIMINARY NOT FOR CONSTRUCTION
BIDDING PURPOSES
AS BUILT
RELEASED FOR
GINNA STA
ROCHESTER GAS & ELECTRIC CORP
SCALE NONE
REACTOR COOLANT PRESSURIZER (RC) P&ID
DRAWING NO.
33013-1258
EAR 13316
CCD 01
REACTOR COOLANT
33013-1258 Rev. 19

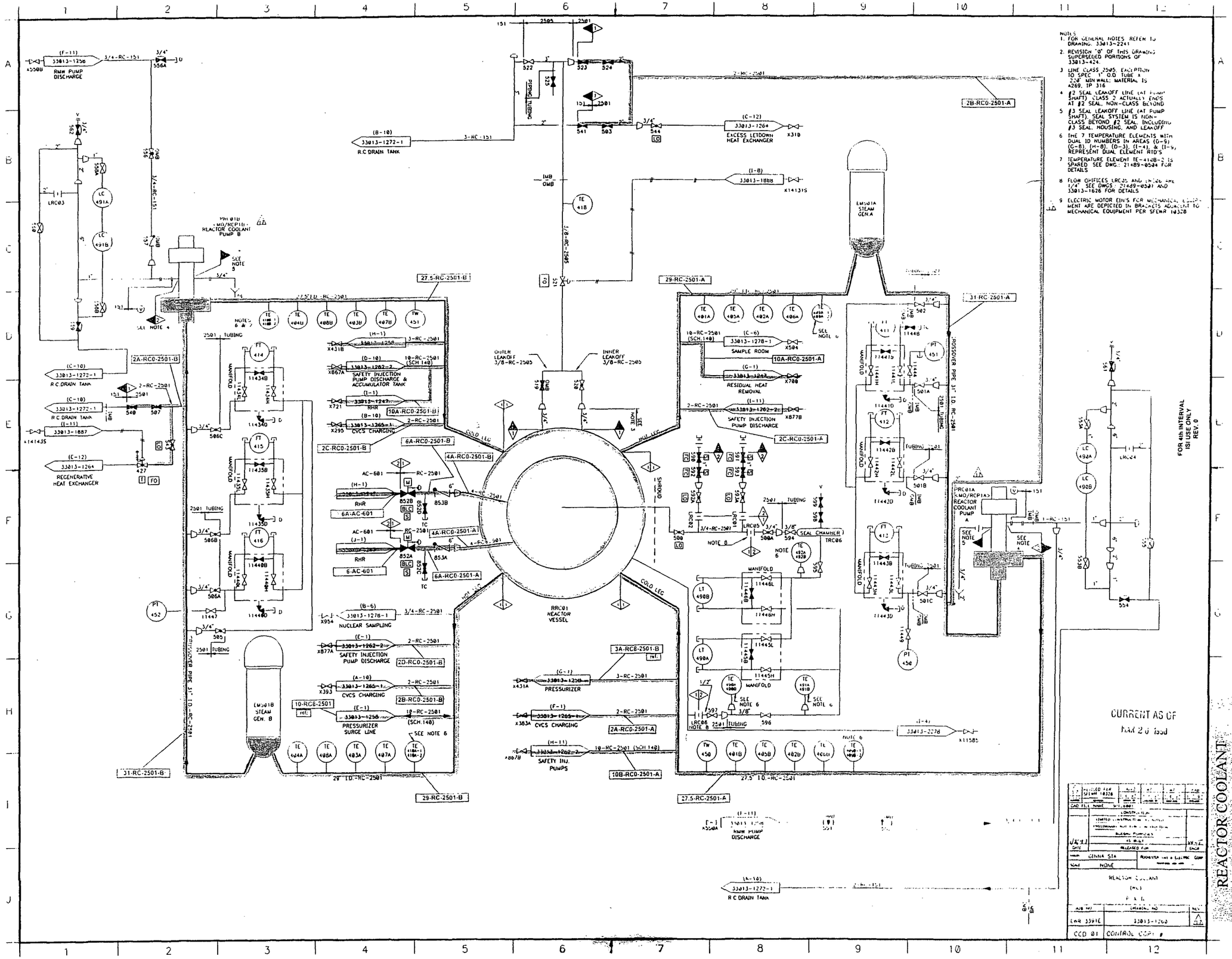
NOTES:
1. FOR GENERAL NOTES, REFER TO DRAWING 33013-2241
2. REVISION "0" OF THIS DRAWING SUPERSEDED PORTIONS OF 33013-424.
3. LINE CLASS 2595 EXCEPTION TO SPEC 1" O.D. TUBE X .238" MIN WALL; MATERIAL IS A269, TP 316
4. #2 SEAL LEAKOFF LINE (AT PUMP SHAFT) CLASS 2 ACTUALLY ENDS AT #2 SEAL. NON-CLASS BEYOND
5. #3 SEAL LEAKOFF LINE (AT PUMP SHAFT). SEAL SYSTEM IS NON-CLASS BEYOND #2 SEAL, INCLUDING #3 SEAL, HOUSING, AND LEAKOFF
6. THE 7 TEMPERATURE ELEMENTS WITH DUAL ID NUMBERS IN AREAS (D-9) (C-8), (H-8), (D-3), (I-4), & (I-9), REPRESENT DUAL ELEMENT RTD'S
7. TEMPERATURE ELEMENT TE-412B-2 IS SPARED. SEE DWG.: 21489-0504 FOR DETAILS
8. FLOW ORIFICES LRC03 AND LRC06 ARE 1/4". SEE DWGS. 21489-0301 AND 33013-1626 FOR DETAILS
9. ELECTRIC MOTOR EIN'S FOR MECHANICAL EQUIPMENT ARE DEPICTED IN BRACKETS ADJACENT TO MECHANICAL EQUIPMENT PER SFEWR 10328
RMW PUMP DISCHARGE
R.C DRAIN TANK
EXCESS LETDOWN HEAT EXCHANGER
REGENERATIVE HEAT EXCHANGER
REACTOR COOLANT PUMP B
EM501A STEAM GEN.A
EM501B STEAM GEN. B
SAMPLE ROOM
RESIDUAL HEAT REMOVAL
SAFETY INJECTION PUMP DISCHARGE
SAFETY INJECTION PUMP DISCHARGE & ACCUMULATOR TANK
CVCS CHARGING
NUCLEAR SAMPLING
PRESSURIZER
PRESSURIZER SURGE LINE
SAFETY INJ. PUMPS
RRC01 REACTOR VESSEL
REACTOR COOLANT PUMP A
SEAL CHAMBER
MANIFOLD
CROSSOVER PIPE 31" I.D. RC-2501
FOR 4th INTERVAL ISI USE ONLY REV. 0
CURRENT AS OF MAY 20 1988
REACTOR COOLANT
33013-1260 Rev. 17

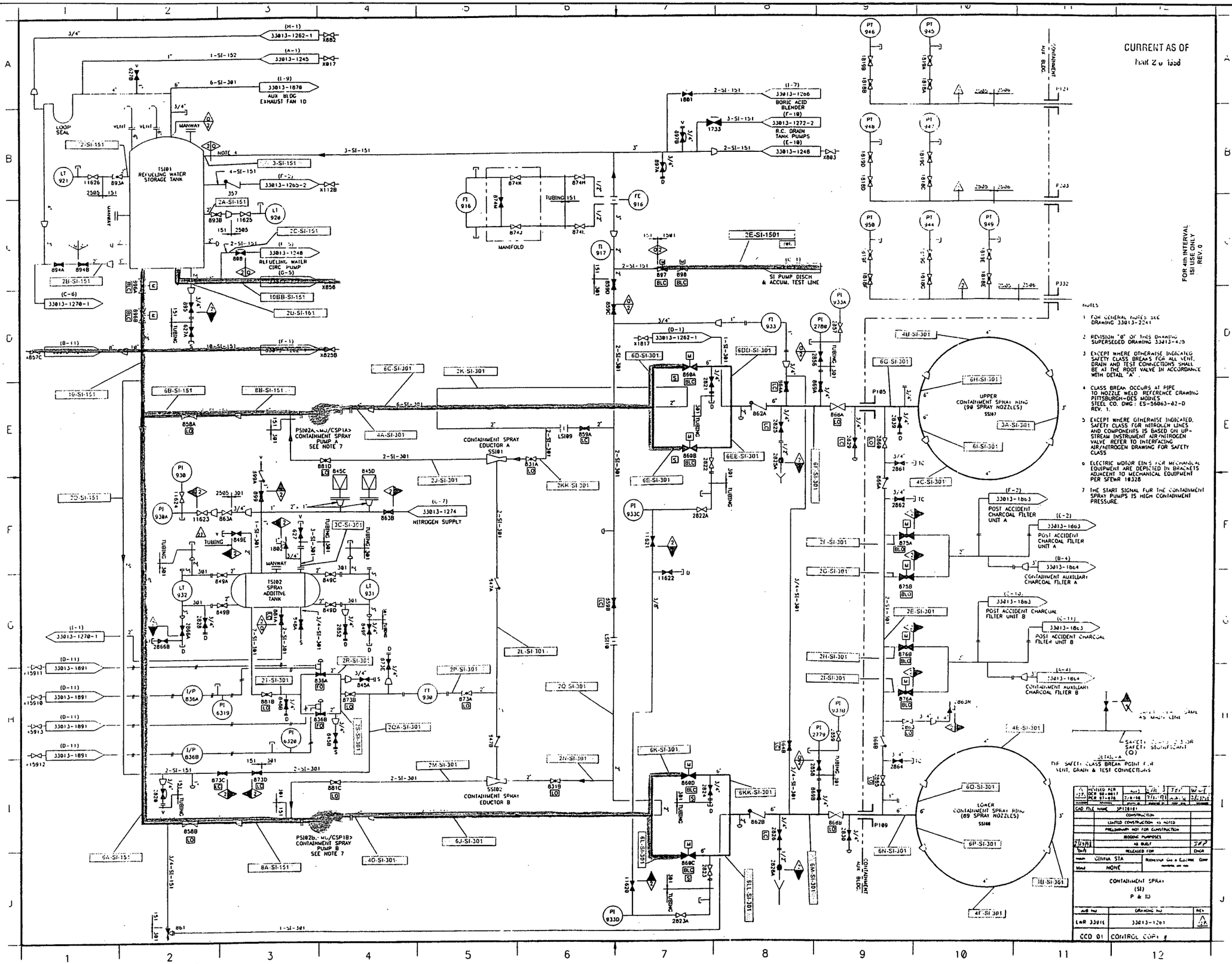

CONTAINMENT SPRAY
33013-1261 Rev.27

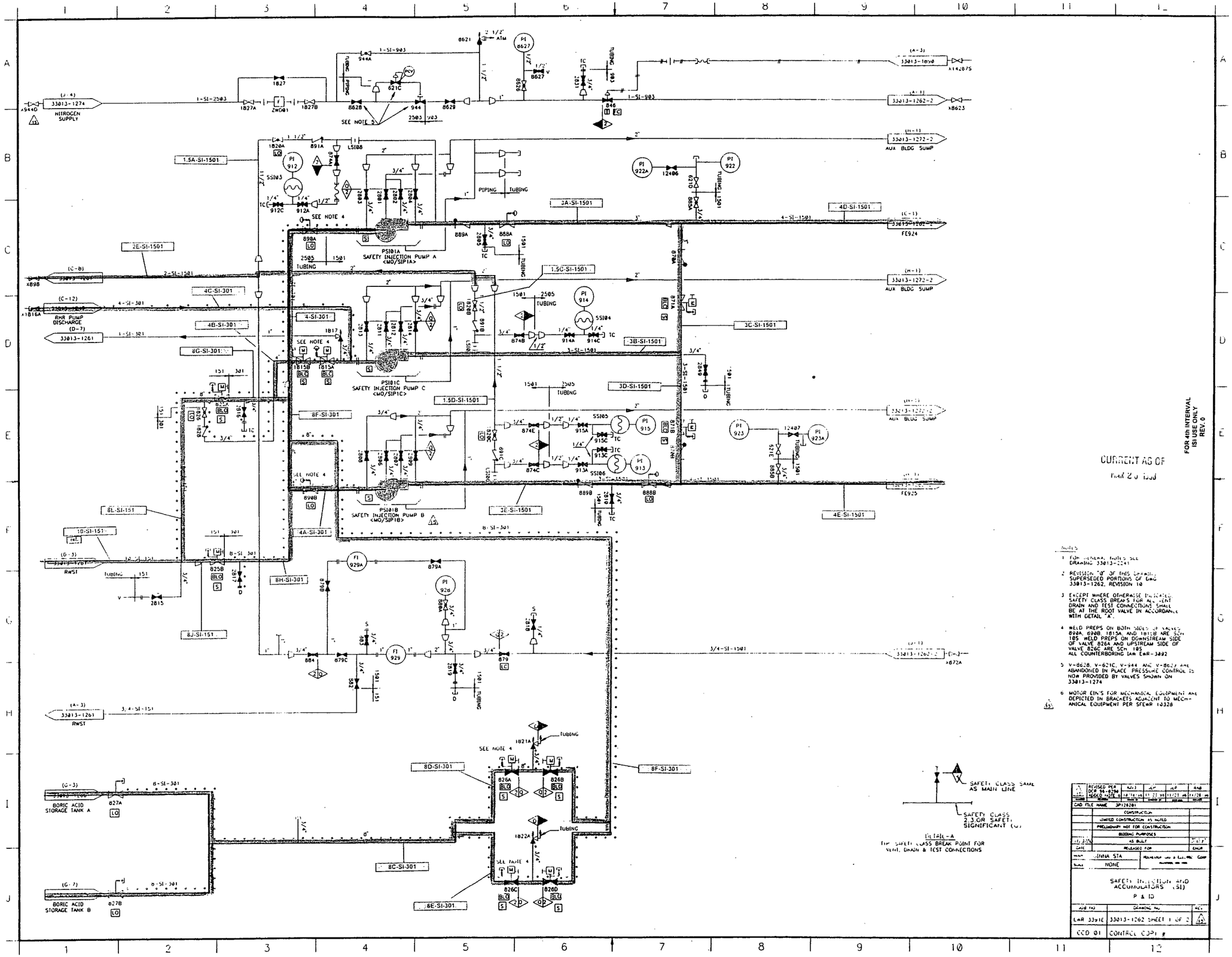
NITROGEN SUPPLY
AUX BLDG SUMP
RHR PUMP DISCHARGE
RWST
BORIC ACID STORAGE TANK A
BORIC ACID STORAGE TANK B
PS101A SAFETY INJECTION PUMP A <MO/SIP1A>
PS101C SAFETY INJECTION PUMP C <MO/SIP1C>
PS101B SAFETY INJECTION PUMP B <MO/SIP1B>
SEE NOTE 4
SEE NOTE 5
TUBING
PIPING
SAFETY CLASS SAME AS MAIN LINE
SAFETY CLASS 2,3 OR SAFETY SIGNIFICANT (G)
DETAIL-A
FOR SAFETY CLASS BREAK POINT FOR VENT, DRAIN & TEST CONNECTIONS
CURRENT AS OF
FOR 4th INTERVAL ISI USE ONLY REV. 0
SAFETY INJECTION AND ACCUMULATORS (SI)
P & ID
33013-1262 SHEET 1 OF 2
CONTROL COPY #
SAFETY INJECTION 33013-1262 Sheet 1 Rev. 15

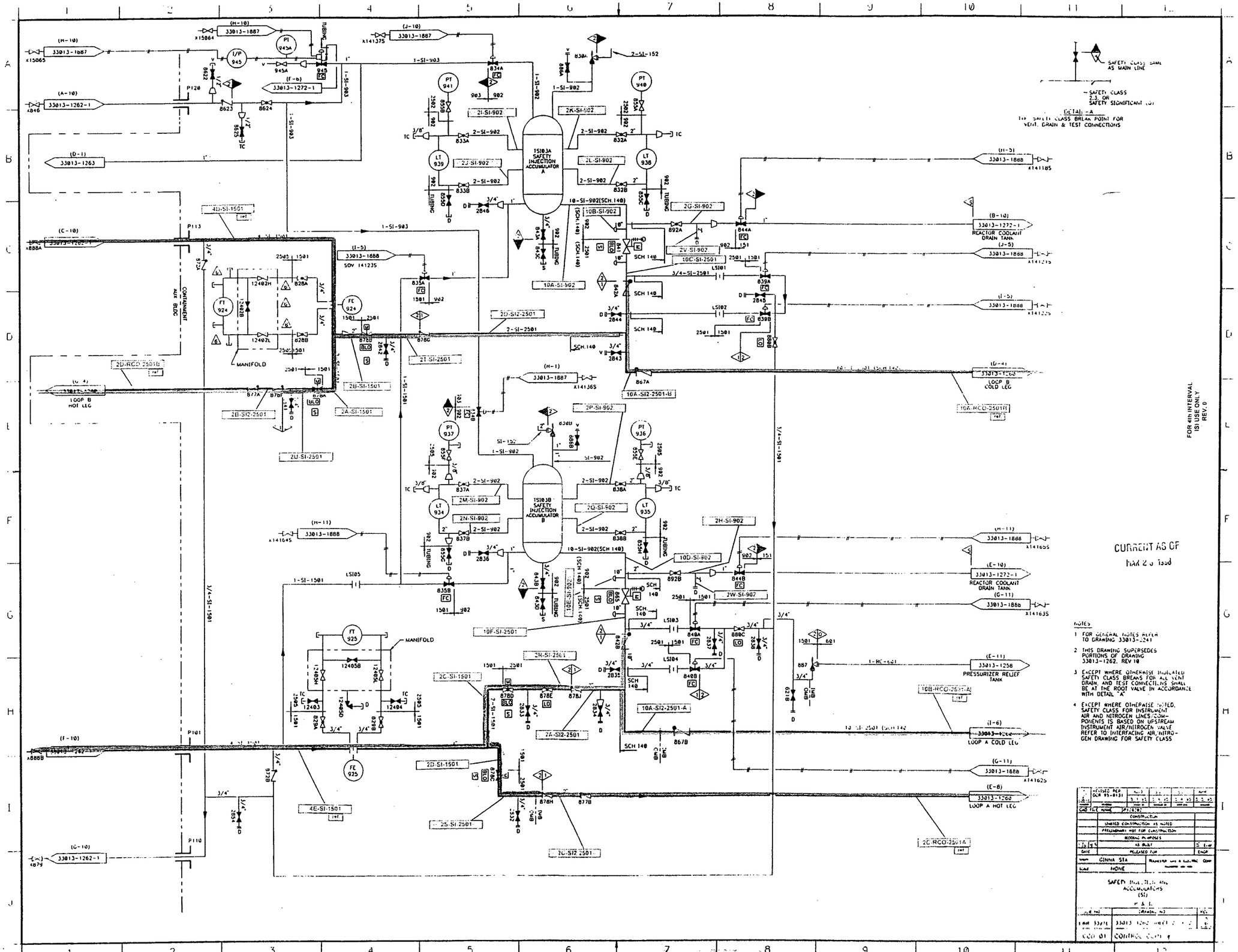

FOR 4th INTERVAL ISI USE ONLY REV. 0

SAFETY INJECTION 33013-1262-2 Rev.6

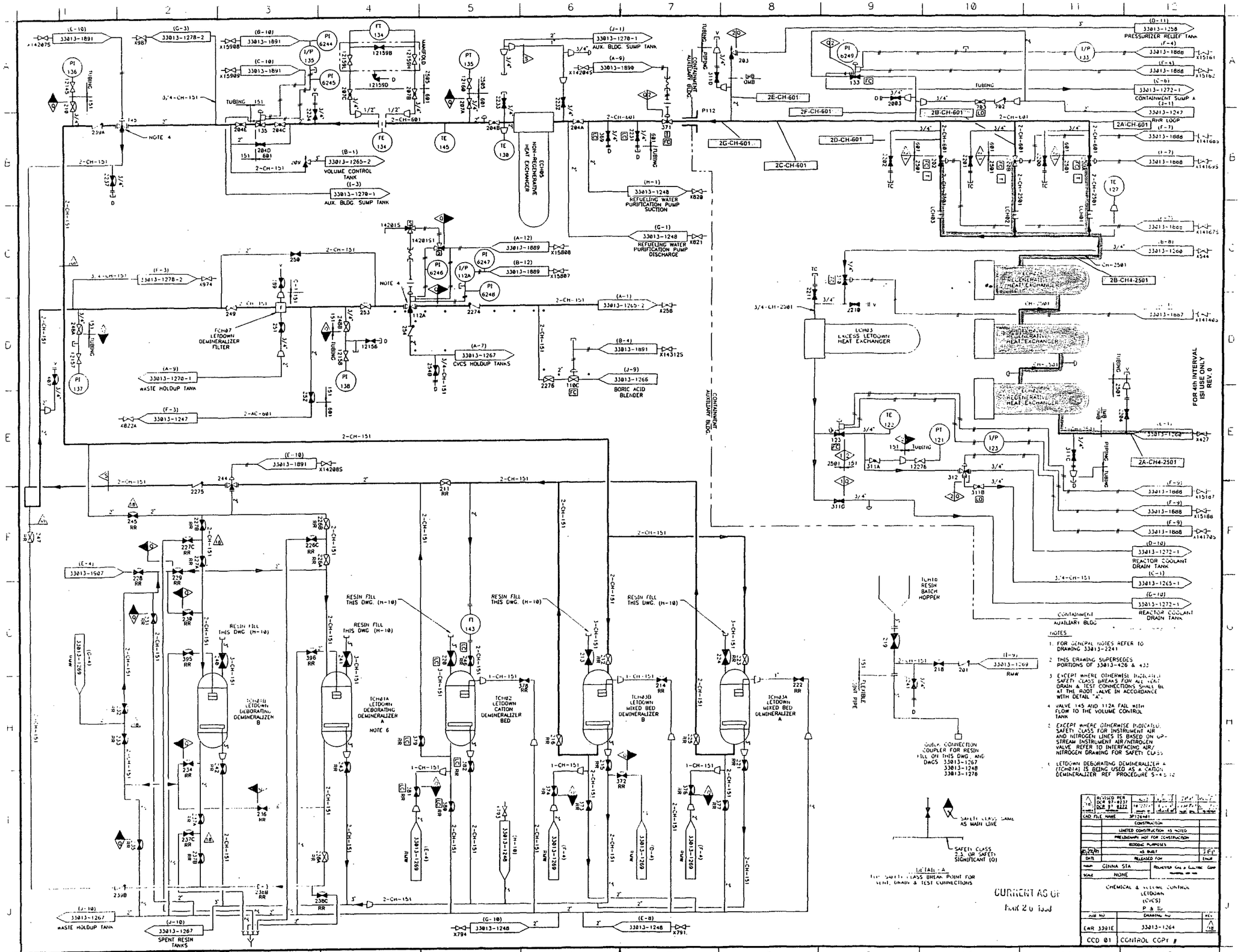

CVC
33013-1264 Rev. 18

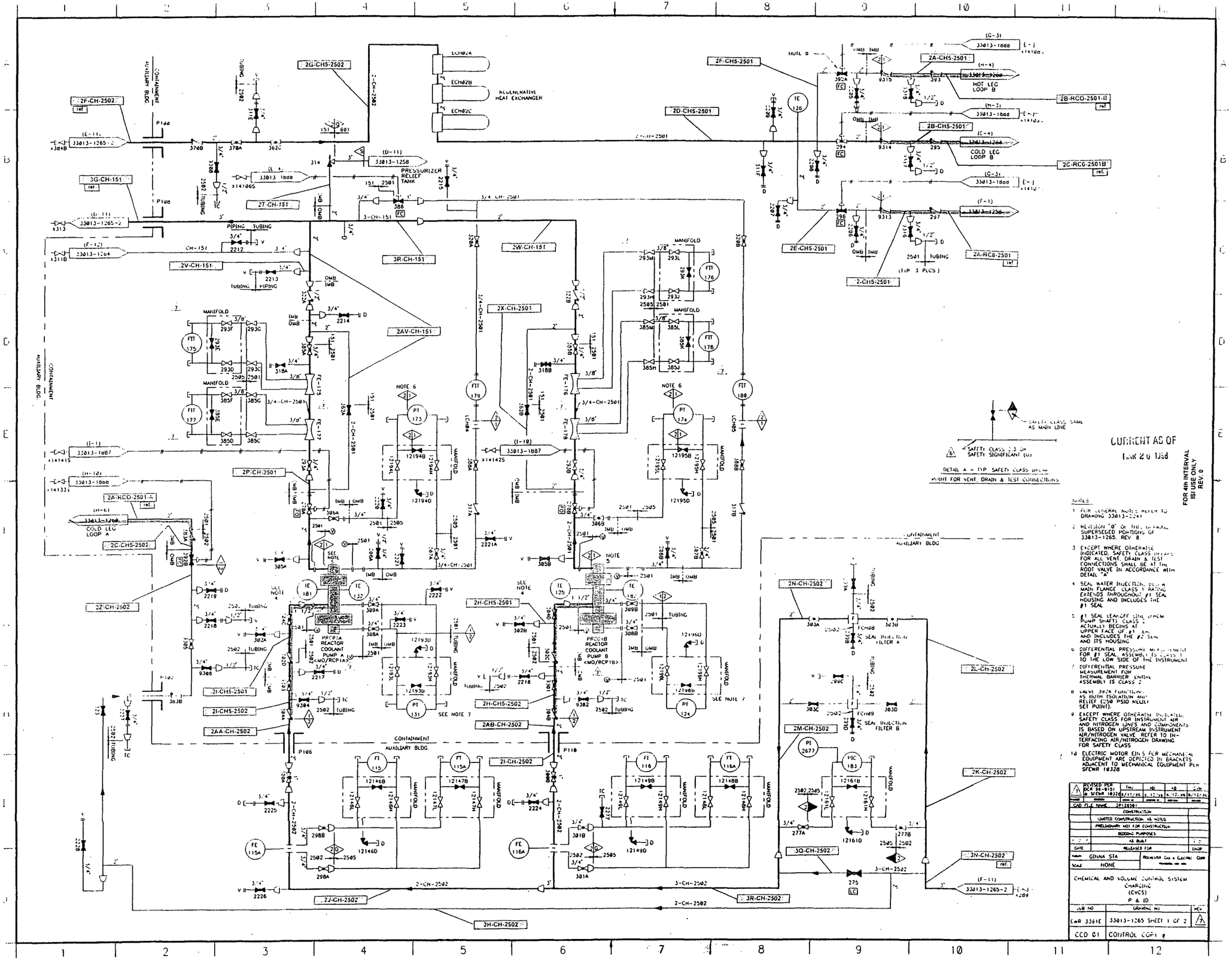
REGENERATIVE HEAT EXCHANGER
PRESSURIZER RELIEF TANK
HOT LEG LOOP B
COLD LEG LOOP B
COLD LEG LOOP A
REACTOR COOLANT PUMP A (MO/RCP1A)
REACTOR COOLANT PUMP B (MO/RCP1B)
SEAL INJECTION FILTER A
SEAL INJECTION FILTER B
CONTAINMENT AUXILIARY BLDG
CURRENT AS OF
FOR 4th INTERVAL ISI USE ONLY REV. 0
CHEMICAL AND VOLUME CONTROL SYSTEM CHARGING (CVCS) P & ID
GINNA STA
NONE
CONTROL COPY #
33013-1265 SHEET 1 OF 2
CVC 33013-1265 Sheet 1 Rev. 7

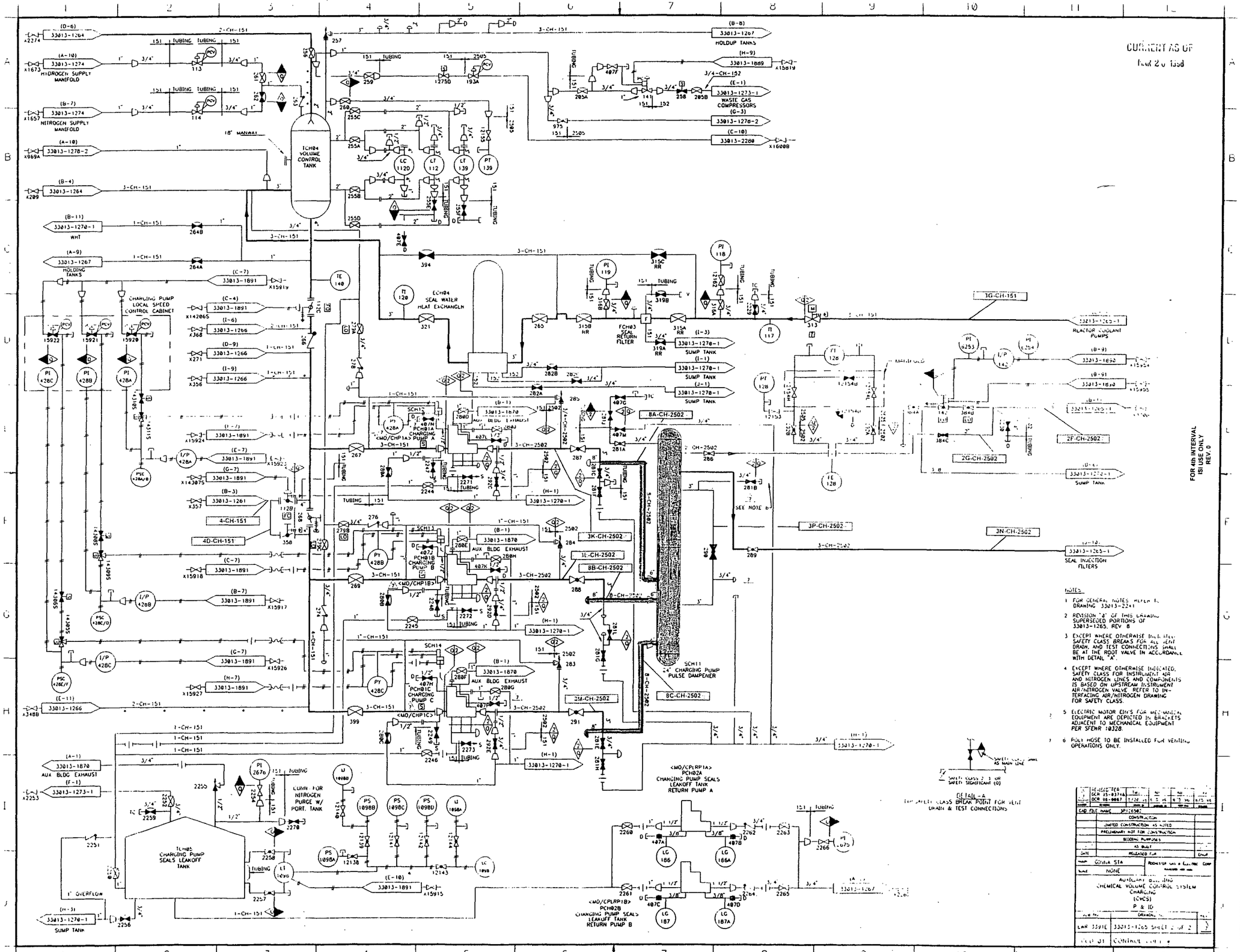

CVC
33013-1265 Sheet 2 Rev. 7

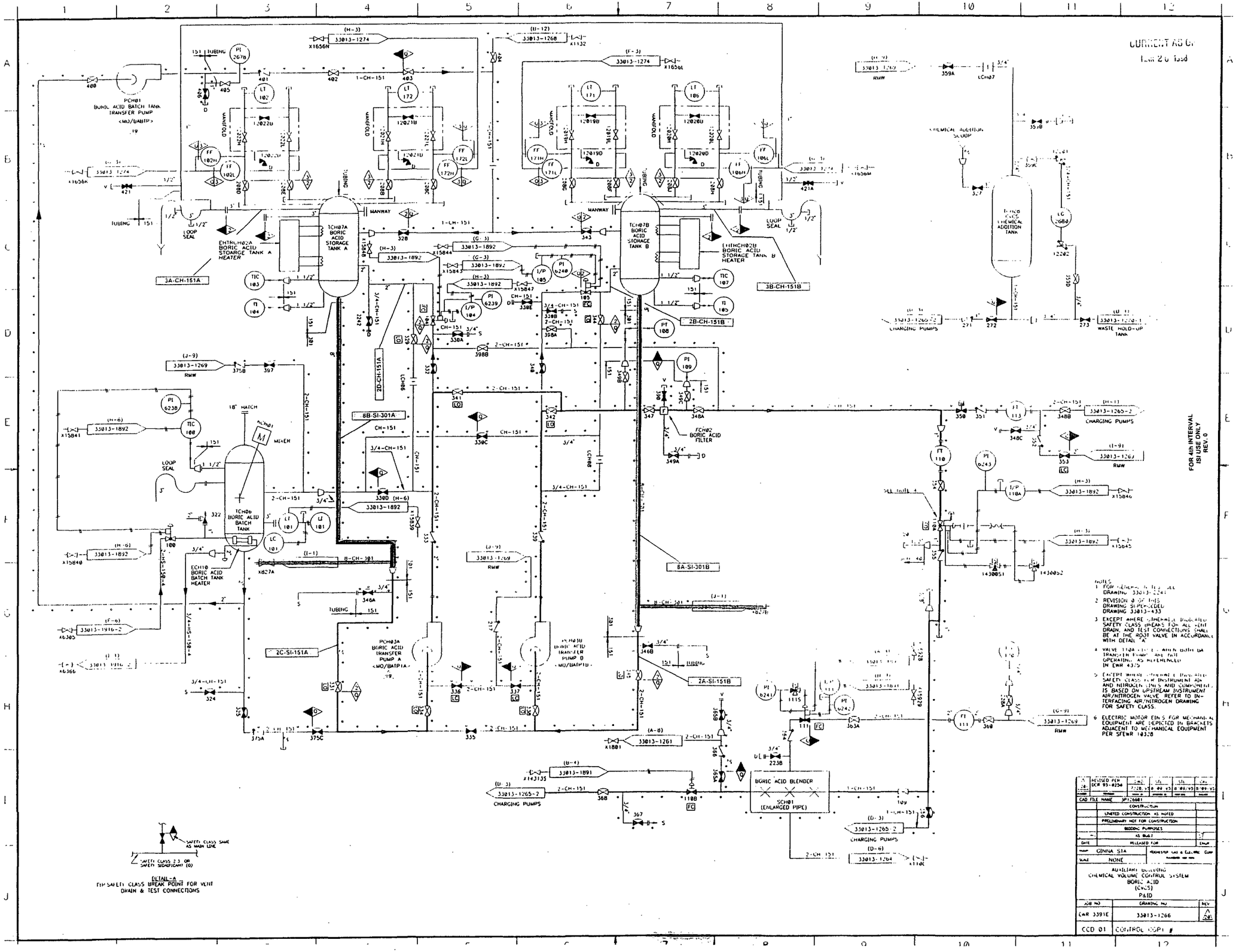

CVC 33013-1266 Rev. 20

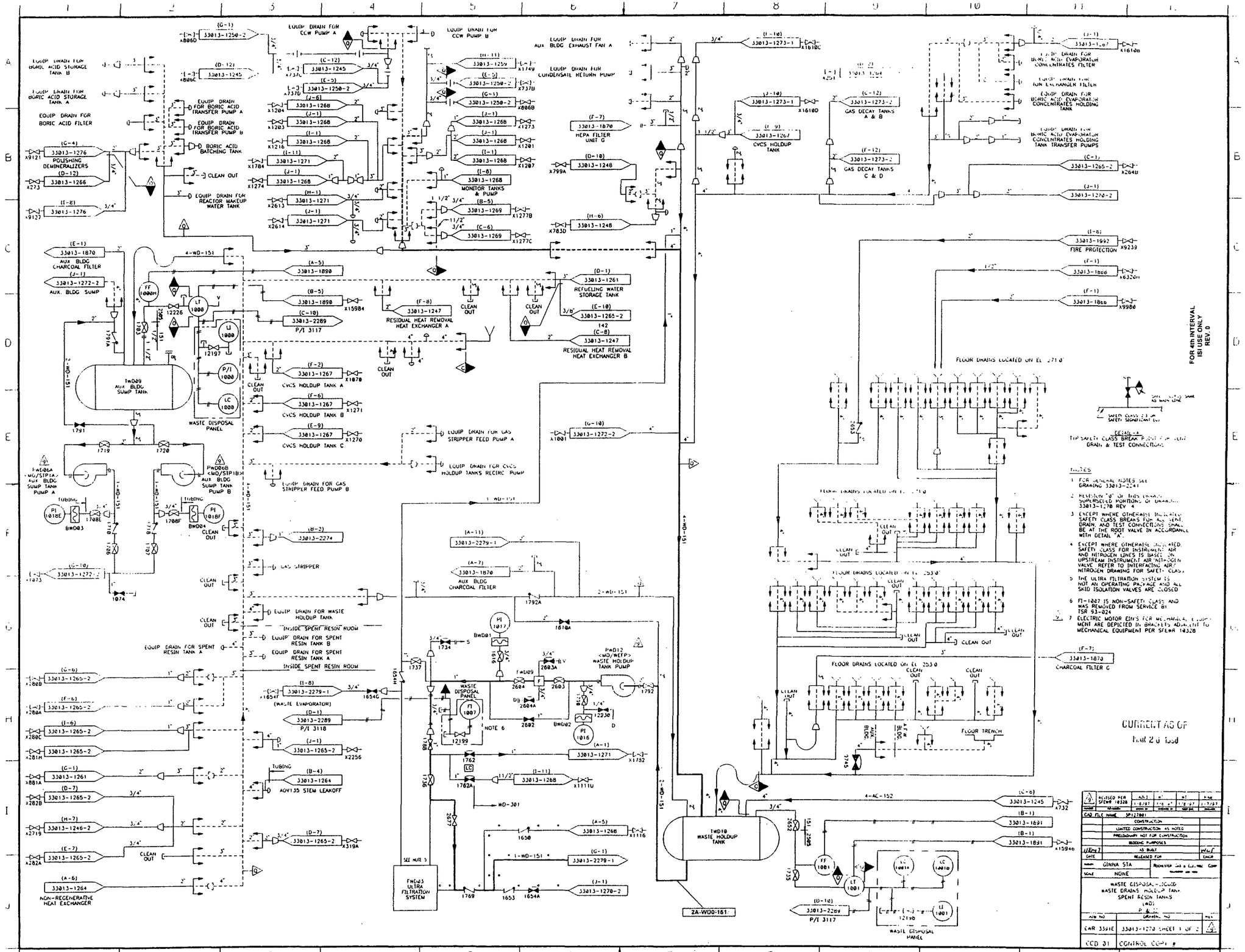

WASTE DISPOSAL
33013-1270 Sheet 1 Rev. 9

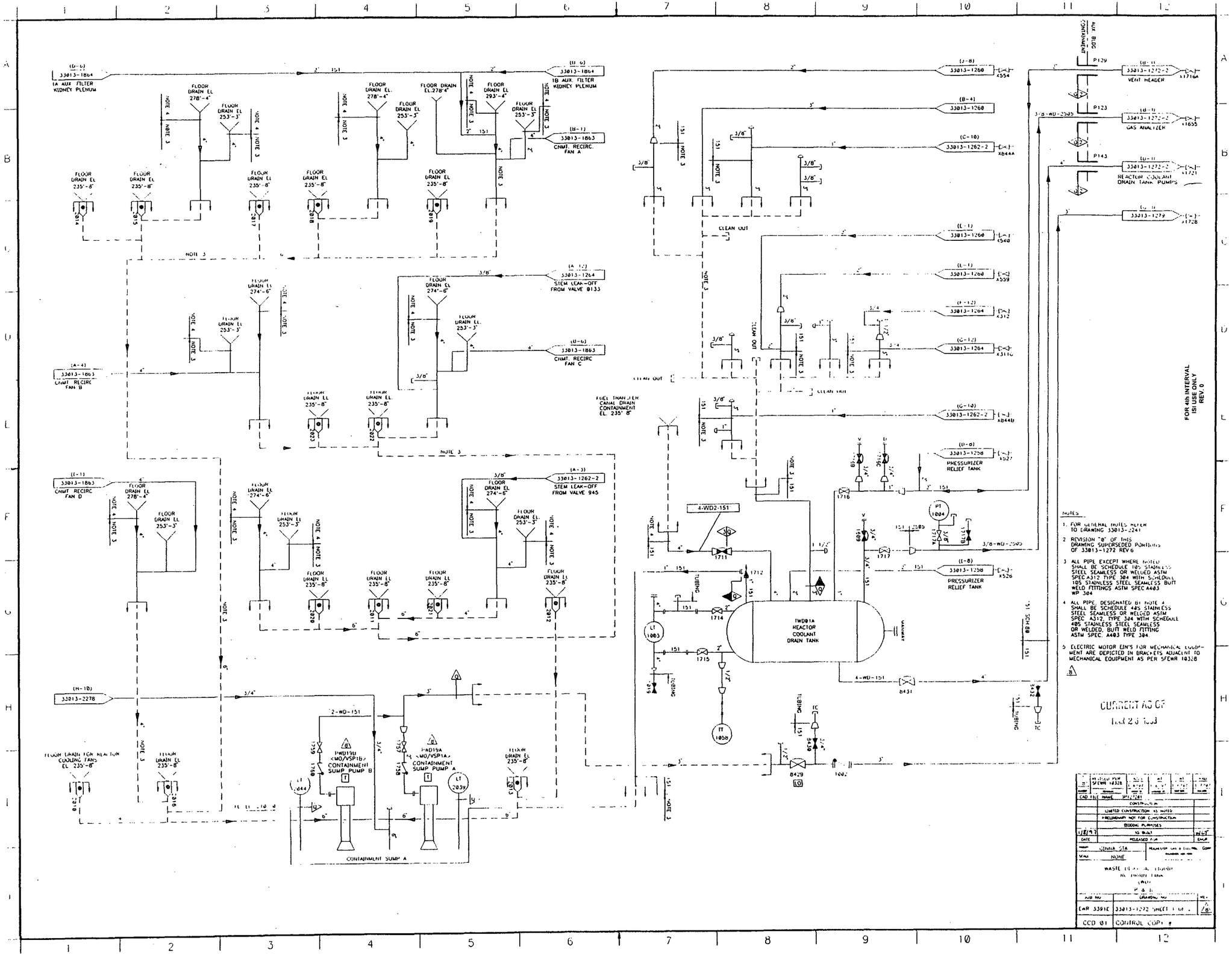

WASTE DISPOSAL
33013-1272 Sheet 1 Rev. 8

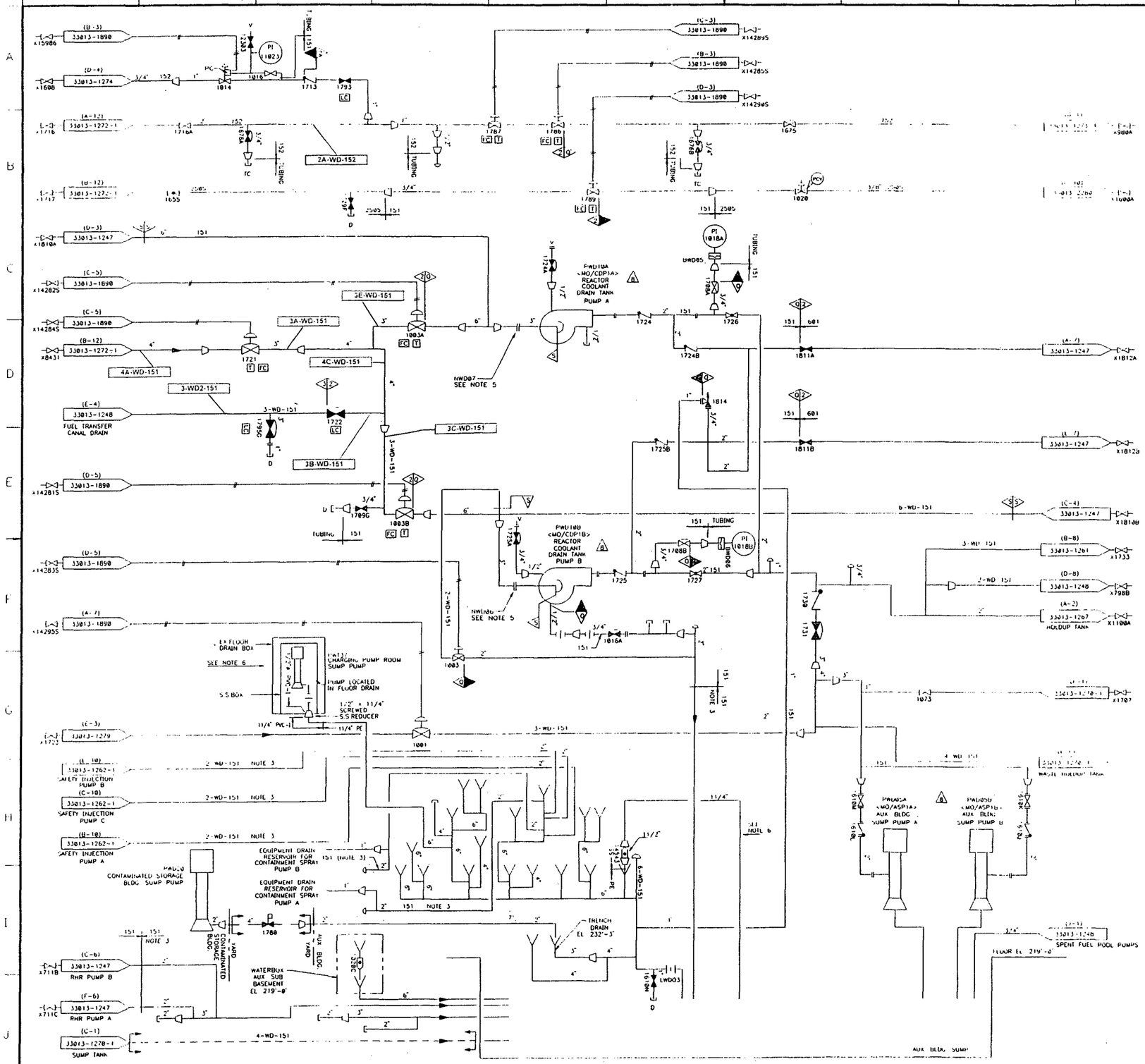
FWD10A
<MO/CDP1A>
REACTOR
COOLANT
DRAIN TANK
PUMP A
FWD10B
<MO/CDP1B>
REACTOR
COOLANT
DRAIN TANK
PUMP B
NWD07
SEE NOTE 5
NWD08
SEE NOTE 5
2A-WD-152
3E-WD-151
3A-WD-151
4A-WD-151
4C-WD-151
3-WD2-151
3-WD-151
3C-WD-151
3B-WD-151
FUEL TRANSFER
CANAL DRAIN
EX FLOOR
DRAIN BOX
SEE NOTE 6
S.S.BOX
CHARGING PUMP ROOM
SUMP PUMP
PUMP LOCATED
IN FLOOR DRAIN
1/2" x 11/4"
SCREWED
S.S.REDUCER
11/4" PVC-1
11/4" PE
SAFETY INJECTION
PUMP B
SAFETY INJECTION
PUMP C
SAFETY INJECTION
PUMP A
CONTAMINATED
BLDG. SUMP PUMP
EQUIPMENT DRAIN
RESERVOIR FOR
CONTAINMENT SPRAY
PUMP B
EQUIPMENT DRAIN
RESERVOIR FOR
CONTAINMENT SPRAY
PUMP A
CONTAMINATED
STORAGE
BLDG.
AUX
BLDG.
WATERBOX
AUX SUB
BASEMENT
EL 219'-0"
TRENCH
DRAIN
EL 232'-3"
RHR PUMP B
RHR PUMP A
SUMP TANK
HOLDUP TANK
WASTE HOLDUP TANK
PWD10A
<MO/ASP1A>
AUX BLDG.
SUMP PUMP A
PWD10B
<MO/ASP1B>
AUX BLDG.
SUMP PUMP B
SPENT FUEL POOL PUMPS
FLOOR EL 219'-0"
AUX BLDG. SUMP
NOTE 3
NOTE 6
TUBING
DETAIL-A
TYP SAFETY CLASS BREAK POINT FOR VENT,
DRAIN & TEST CONNECTIONS
CURRENT AS OF
FOR 4th INTERVAL
ISI USE ONLY
REV. 0
NOTES:
1. FOR GENERAL NOTES REFER TO DRAWING 33013-2241
2. REVISION "8" OF THIS DRAWING SUPERSEDED PORTIONS OF DRAWING 33013-1272 REV 6
3. WHERE NOTED, PIPE FITTINGS FOR SMALL BORE PIPING SHALL BE SCH 160 SEAMLESS, BUTT-WELD PER ASTM A403 TP304
4. EXCEPT WHERE OTHERWISE INDICATED, SAFETY CLASS BREAKS FOR ALL VENT, DRAIN & TEST CONNECTIONS SHALL BE AT THE ROOT VALVE IN ACCORDANCE WITH DETAIL "A"
5. NWD06 AND NWD07 ARE A "WASHING" TYPE STRAINER WITH 1/16" DIA. RODS RODS WELDED TO IT AND USED TO SUPPORT A SCREEN
6. SUMP PUMP IS INSTALLED IN CHARGING PUMP ROOM FLOOR DRAIN IN A MANNER THAT CHARGES ANY OIL SPILLAGE THRU A 11/4" DIA POLYETHYLENE PIPE THAT IS LOCATED IN THE INSIDE OF THE FLOOR DRAIN PIPING SYSTEM. THE PIPING EXITS THE EXISTING DRAIN SYSTEM AT DRAIN BOX #2 AND TRAVELS OVER THE FLOOR TO THE HATCHWAY OF THE RHR PIT AND EVENTUALLY TO THE AUXILIARY BLDG.SUMP, LOCATED IN THE RHR PIT
7. EXCEPT WHERE OTHERWISE INDICATED, SAFETY CLASS FOR INSTRUMENT AIR AND NITROGEN LINES AND COMPONENTS IS BASED UPON UPSTREAM INSTRUMENT AIR/NITROGEN VALVE. REFER TO INTERFACING AIR/NITROGEN DRAWING FOR SAFETY CLASS
8. ELECTRIC MOTOR EIN'S FOR MECHANICAL EQUIPMENT ARE DEPICTED IN BRACKETS ADJACENT TO MECHANICAL EQUIPMENT AS PER SFEWR 10328
REVISED PER SFEWR 10328
CONSTRUCTION
LIMITED CONSTRUCTION AS NOTED
PRELIMINARY NOT FOR CONSTRUCTION
BIDDING PURPOSES
AS BUILT
RELEASED FOR
GINNA STA.
NONE
WASTE DISPOSAL - LIQUID
RC DRAIN TANK
(WD)
P & ID
CCD 01
WASTE DISPOSAL
33013-1272 Sheet 2 Rev. 8

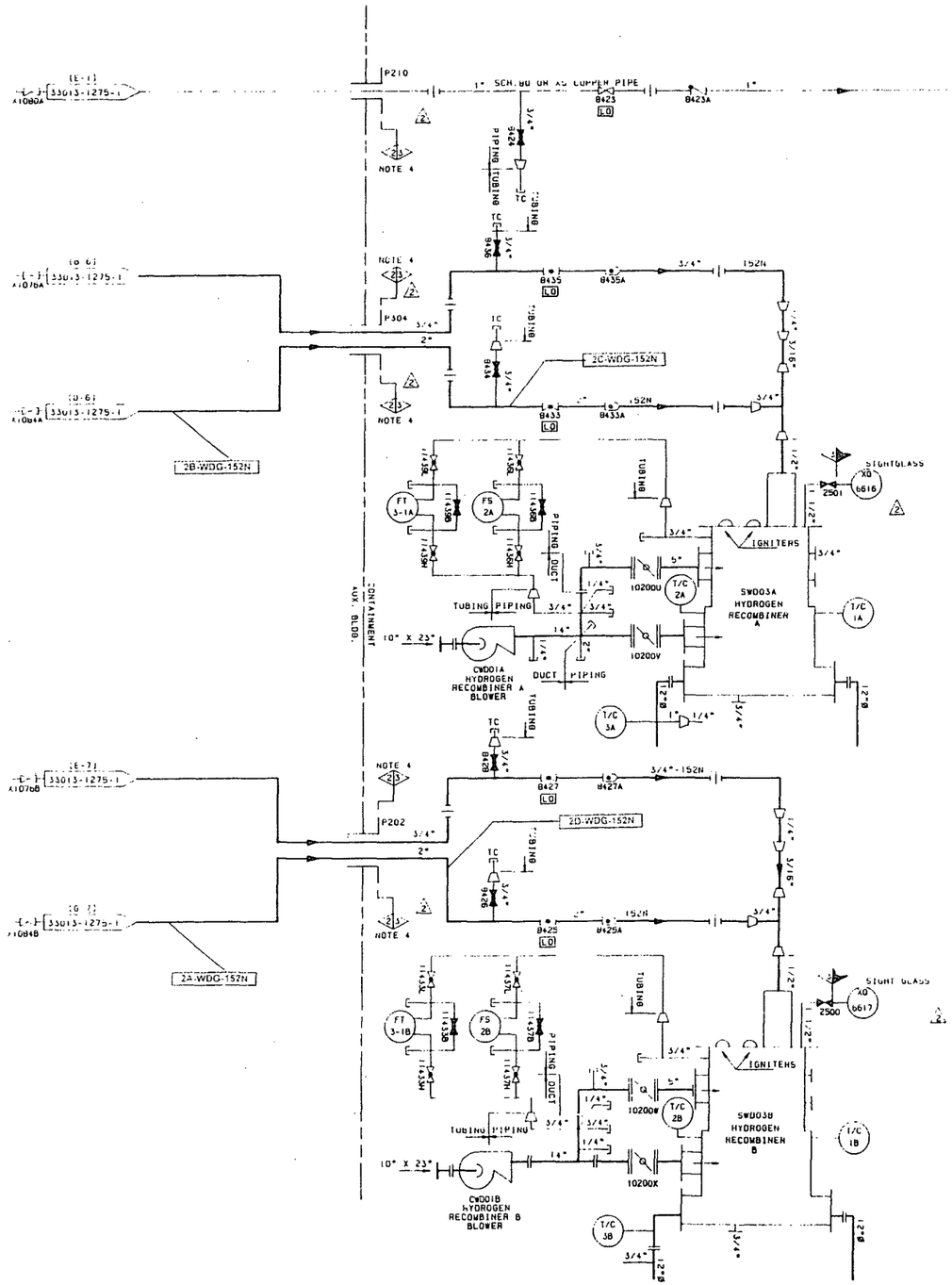

CURRENT AS OF

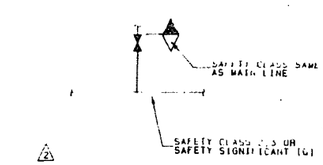

DETAIL A

TYP. SAFETY CLASS BREAK POINT FOR VENT, DRAIN AND TEST CONNECTIONS

NOTES:

1. FOR GENERAL NOTES REFER TO DRAWING 33013-2241.
2. THIS DRAWING SUPERSEDES PORTIONS OF DRAWING 33013-1275 REV. 3
3. EXCEPT WHERE OTHERWISE INDICATED, SAFETY CLASS BREAKS FOR ALL VENT, DRAIN AND TEST CONNECTIONS SHALL BE AT THE ROOT VALVE IN ACCORDANCE WITH DETAIL "A".
4. THE PIPING SAFETY CLASS CHANGE INSIDE THE CONTAINMENT IS AFTER THE PIPE SEAL WELDS AT THE PENETRATIONS.

09100-12/02/92

	INITIATED PER DCR 92-0515	A.J.J. 11/30/92	SJT 12/1/92	CFG 12/1/92	TGH 12/1/92
NUMBER	REVISIONS	DRAWN BY	DESIGNED BY	CHECK BY	APPR. BY

CAD FILE NAME 33013-1275-2

CONSTRUCTION
LIMITED CONSTRUCTION, AS NOTED
PRELIMINARY NOT FOR CONSTRUCTION
BIDDING PURPOSES
AS BUILT
RELEASED FOR

DATE | ENGR.

ENGR. GINNA STA. | ROCHESTER GAS & ELECTRIC CORP.

SCALE NONE

WASTE DISPOSAL - GAS
HYDROGEN RECOMBINER
(WD)
P & ID

JOB NO.	DRAWING NO.	REV.
E&R 3391E	33013-1275 SHEET 2 OF 2	2

CCO 01 CONTROL COPY

FOR 4th INTERVAL ISI USE ONLY REV. 0

WASTE DISPOSAL
33013-1275 Sheet 2 Rev. 2

CURRENT AS OF
MAR 2 0 1998

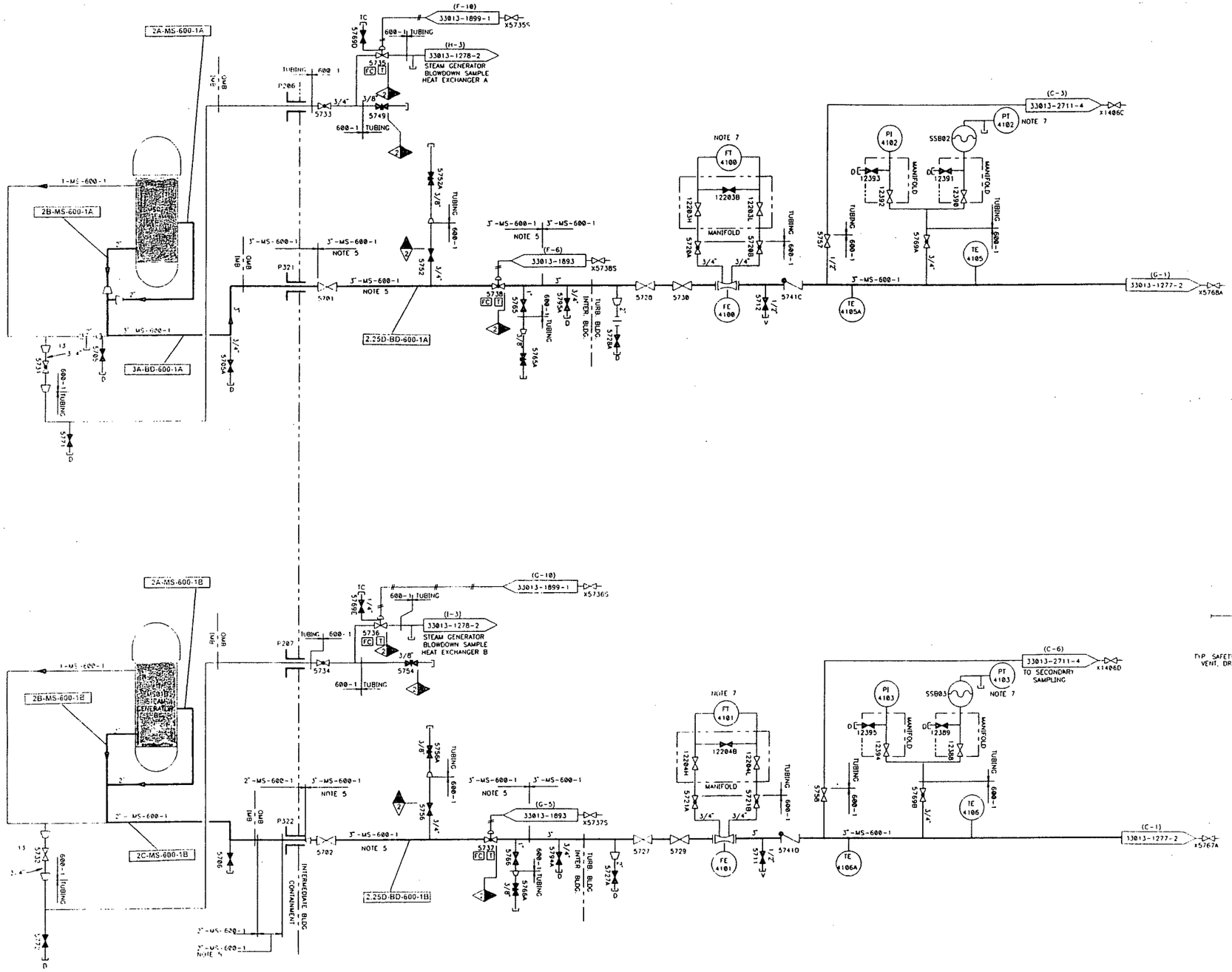

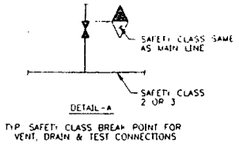

FOR 4th INTERVAL
ISI USE ONLY
REV. 0

NOTES
1 FOR GENERAL NOTES, SEE DRAWING 33013-2241
2 THIS DRAWING SUPERSEDES PORTIONS OF DRAWING 33013-1277, REV 8
3 EXCEPT WHERE OTHERWISE INDICATED SAFETY CLASS BREAKS FOR ALL VENT, DRAIN, AND TEST CONNECTIONS SHALL BE AT THE ROOT VALVE IN ACCORDANCE WITH DETAIL "A"
4 ALL SAFETY CLASS LINES ARE SEISMIC CATEGORY 1.
5 MS-600-1 LINE SPEC APPLIES, BUT SEAMLESS 2 1/4" CR-1MO, ASME SPEC. SA335 / GRADE P22 PIPE IS SUBSTITUTED.
6 EXCEPT WHERE OTHERWISE INDICATED, SAFETY CLASS FOR INSTRUMENT AIR AND NITROGEN LINES AND COMPONENTS IS BASED ON UPSTREAM INSTRUMENT AIR/NITROGEN VALVE. REFER TO INTERFACING AIR/NITROGEN DRAWING FOR SAFETY CLASS
7 ELECTRICAL SIGNAL IS SAFETY SIGNIFICANT, PRESSURE BOUNDARY IS NON-NUCLEAR SAFETY

REVISED PER DCR 98-0159	TMJ 6/19/98	AB 6/19/98	AB 6/19/98	CAT 6/25/98
CAD FILE NAME 3013277B1				
CONSTRUCTION				
LIMITED CONSTRUCTION AS NOTED				
PRELIMINARY NOT FOR CONSTRUCTION				
BIDDING PURPOSES				
6/25/92	AS BUILT			C.A.V.
DATE	RELEASED FOR			ENGR.
NINE MILE PT. NIAGARA STA	ROCHESTER GAS & ELECTRIC CORP.			
SCALE NONE				
STEAM GENERATOR BLOWDOWN (SGB) P & ID				
JOB NO. EWR 3391E	DRAWING NO. 33013-1277 SHEET 1 OF 2			REV. 13
CCD 01	CONTROL COPY #			

STEAM GENERATOR
33013-1277 Sheet 1 Rev. 13

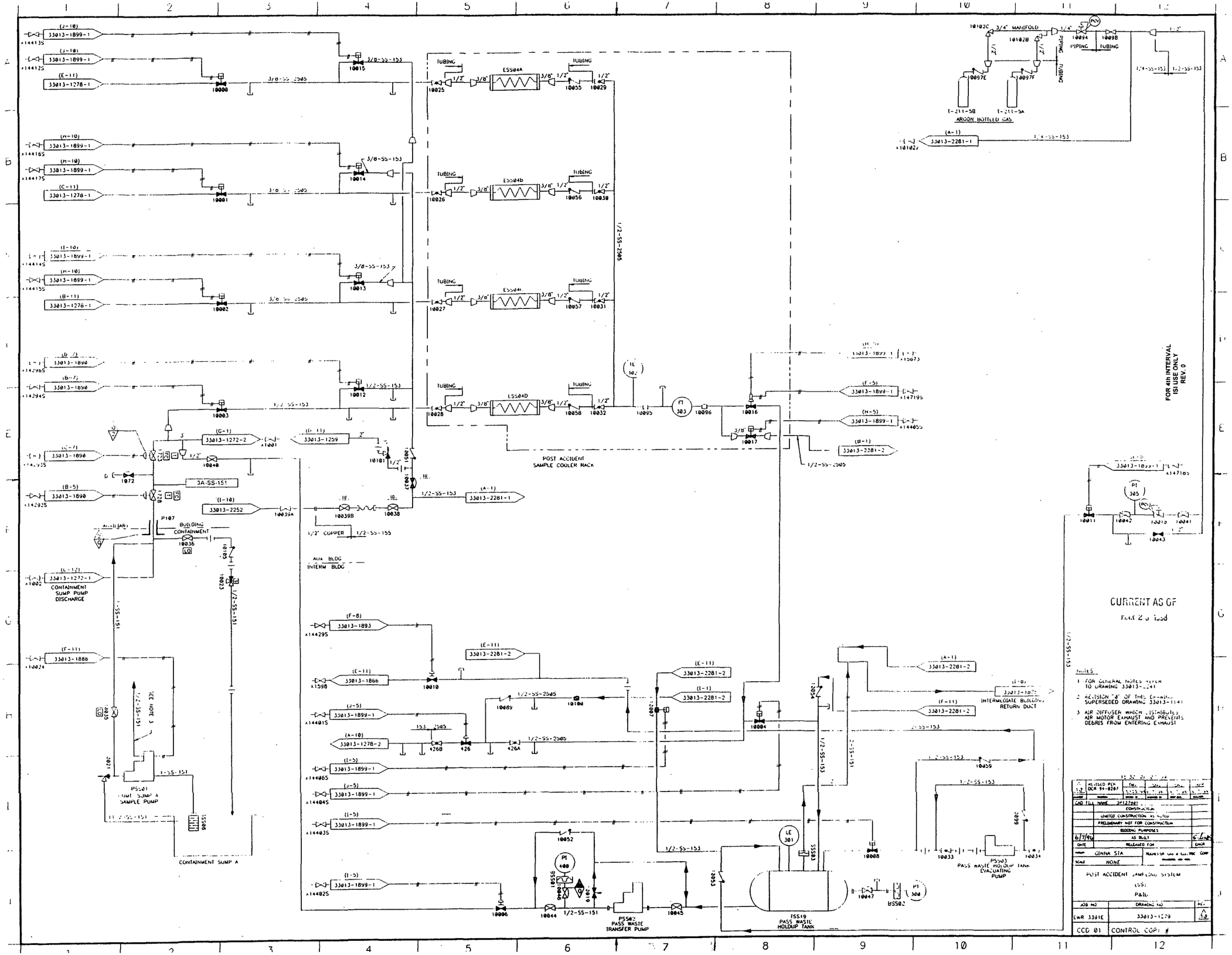
POST ACCIDENT SAMPLING
33013-1279 Rev. 10
POST ACCIDENT SAMPLE COOLER RACK
ARGON BOTTLED GAS
CONTAINMENT SUMP PUMP DISCHARGE
CONTAINMENT SUMP A
PASS WASTE HOLDUP TANK
PASS WASTE TRANSFER PUMP
PASS WASTE HOLDUP TANK EVACUATING PUMP
INTERMEDIATE BUILDING RETURN DUCT
AUX BLDG
INTERM BLDG
BUILDING CONTAINMENT
FOR 4th INTERVAL ISI USE ONLY REV. 0
CURRENT AS OF
POST ACCIDENT SAMPLING SYSTEM
33013-1279
CONTROL COPY #

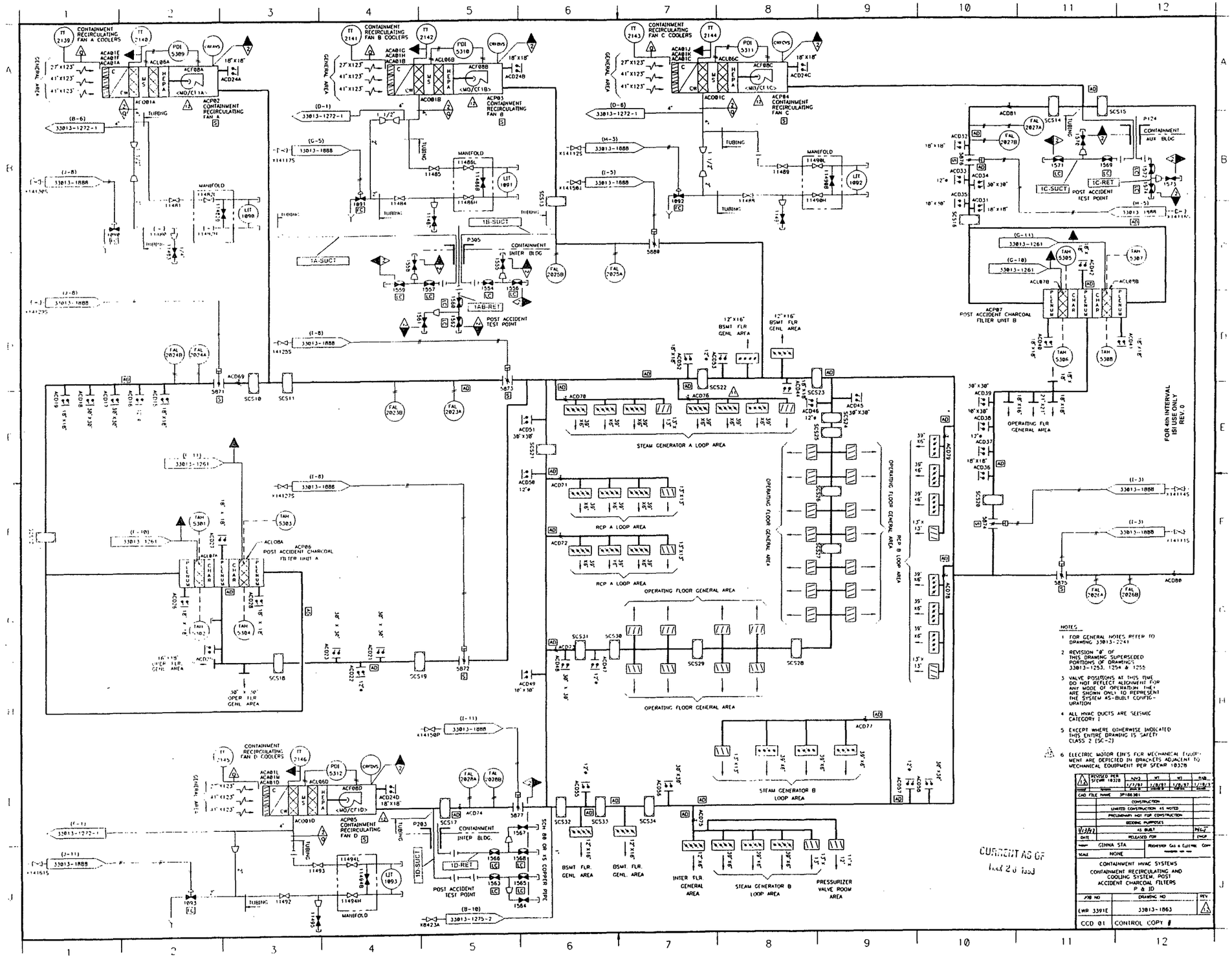

CONTAINMENT HVAC
33013-1863 Rev. 12

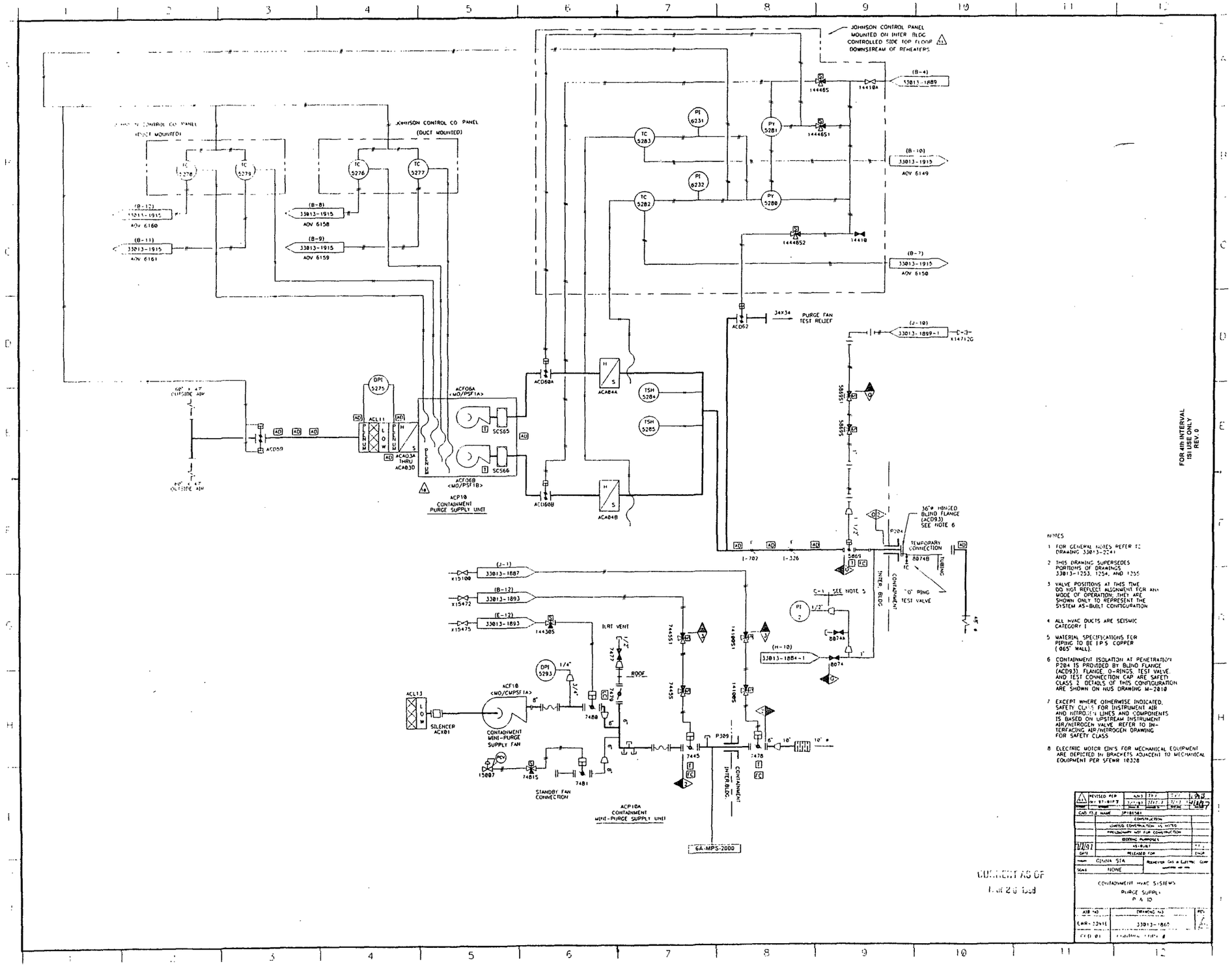

CONTAINMENT HVAC
33013-1865 Rev. 11

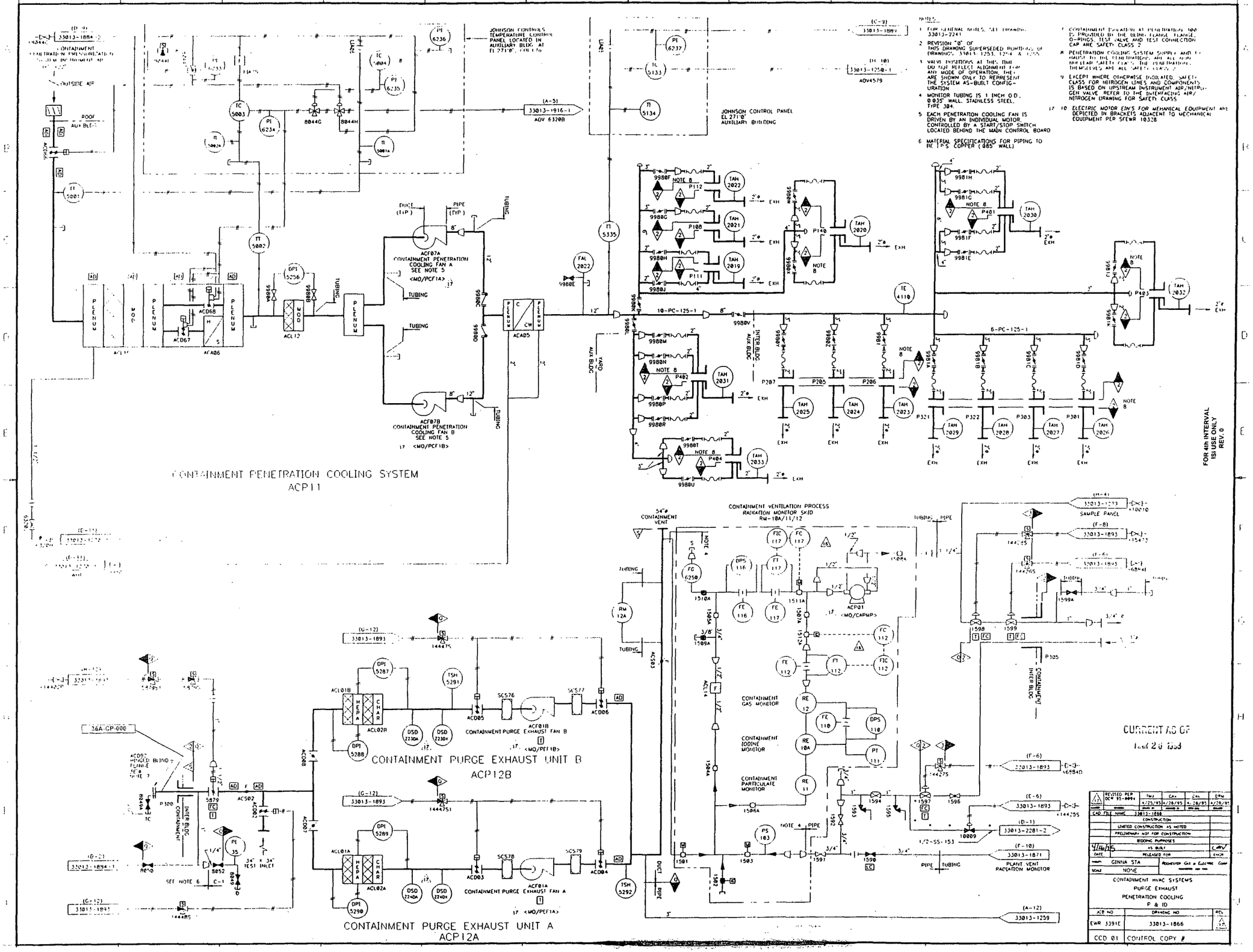

CONTAINMENT HVAC
33013-1866 Rev. 17

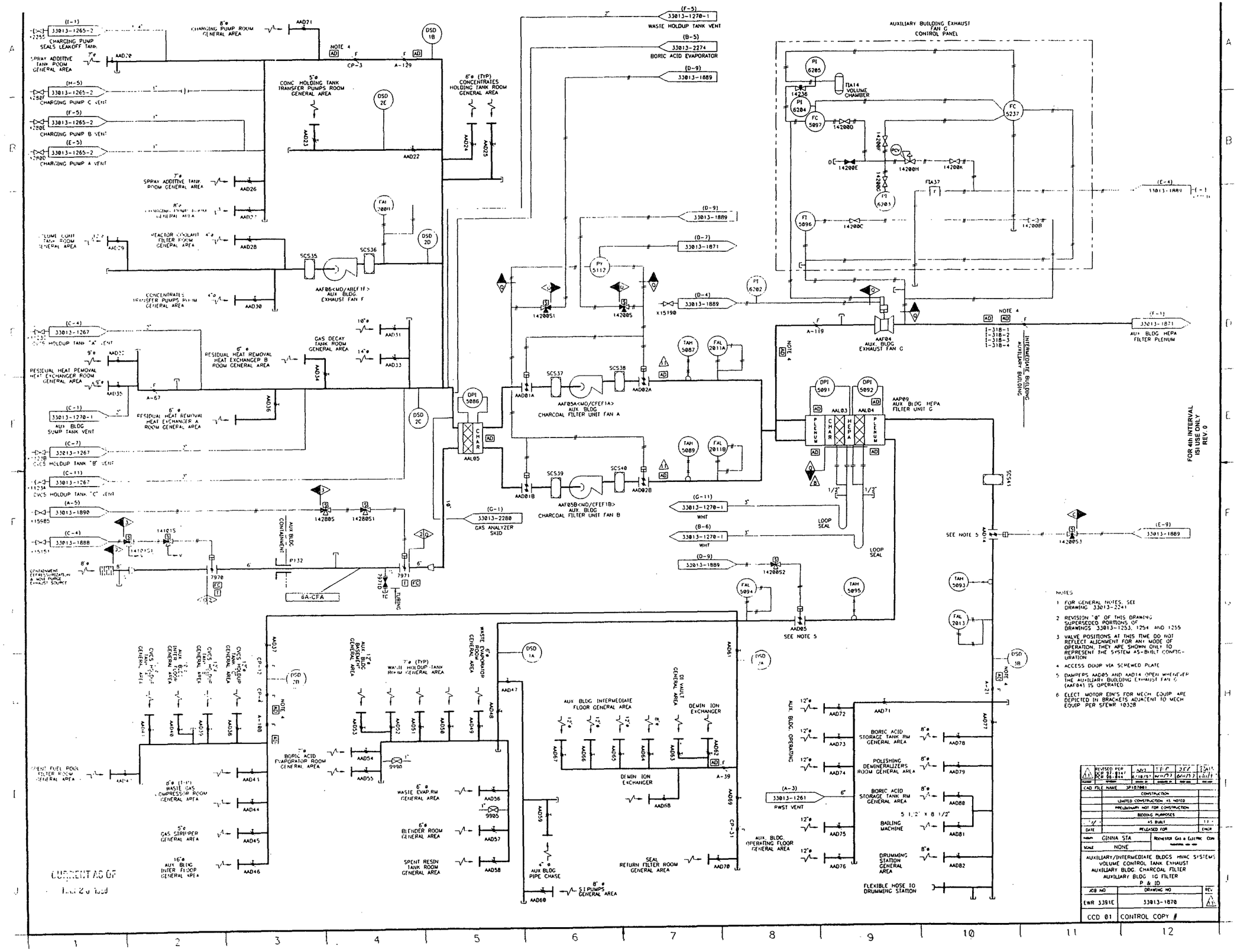

AUX/INT. BLDG. HVAC
33013-1870 Rev. 11

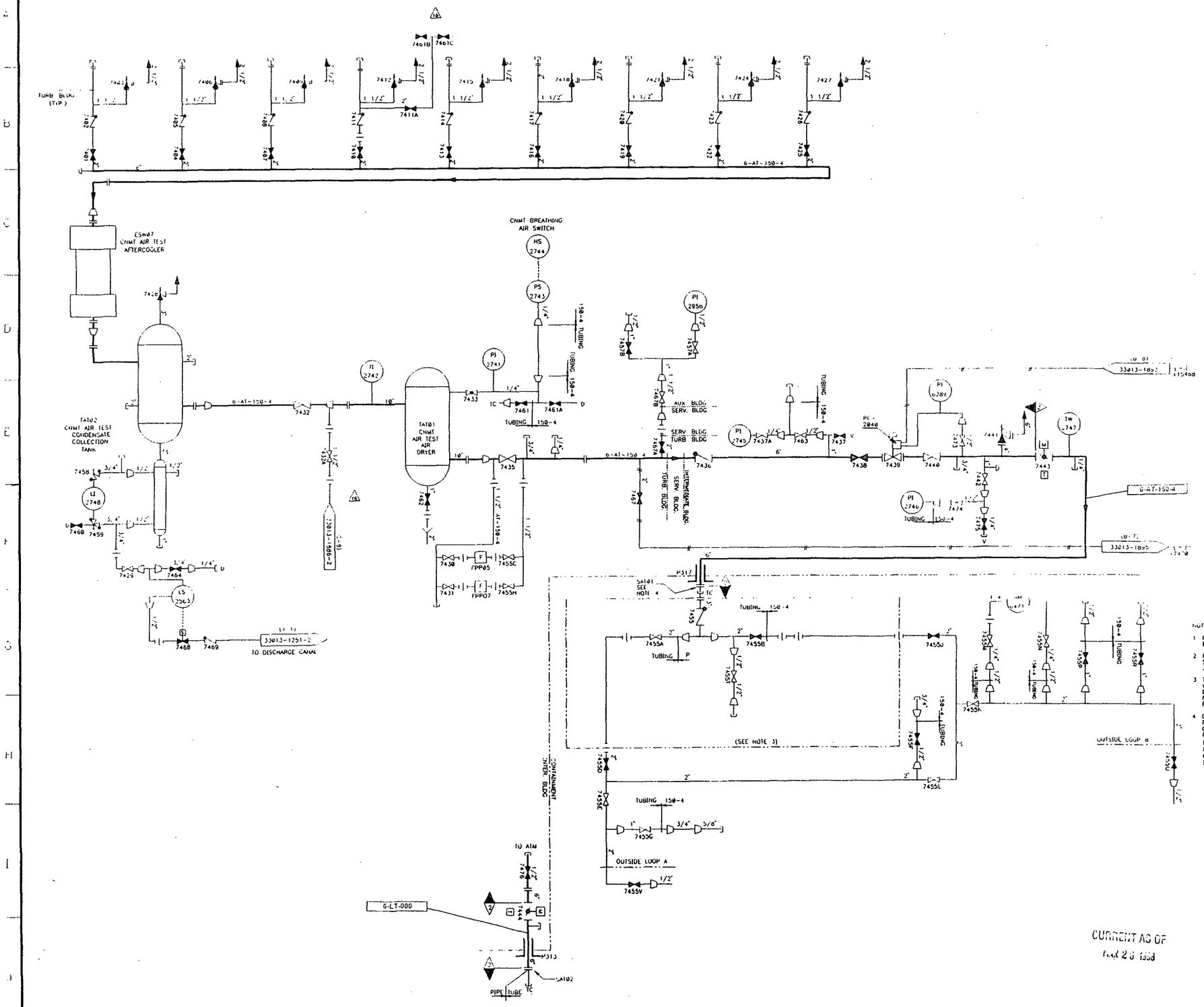

NOTES:

1. FOR GENERAL NOTES REFER TO DRAWING 33013-2241
2. REVISION "3" OF THIS DRAWING SUPERSEDED PORTIONS OF 33013-540.
3. THE PIPING CONFIGURATION ENCL. SED WITHIN THE PHANTOM LINE IS INSTALLED DURING OUTAGES. COMPONENTS ARE REMOVED FROM CONTAINMENT DURING PLANT OPERATION.
4. DURING PLANT OPERATION, A BLIND FLANGE (SAT01) WITH A CAPPED TEST CONNECTION IS INSTALLED ON THE PENETRATION. DURING REFUELING THE BLIND FLANGE IS REPLACED WITH A FLANGED ADAPTER THAT CONNECTS THE PENETRATION WITH THE 3" PIPING INSIDE CONTAINMENT.

3	10	MODIFIED PER DCR 87-0204 ISR 87-131	12/16/87	12/16/87	12/16/87
CAD FILE NAME: SP188281					
		CONSTRUCTION			
		LIMITED CONSTRUCTION AS NOTED			
		PRELIMINARY NOT FOR CONSTRUCTION			
		RECORD PURPOSES			
12/87		AS BUILT			ZEP
DATE		RELEASED FOR			
GINNA STA					
SCALE NONE					

CONTAINMENT AIR & PROOF TEST & BREATHING AIR
P & ID

JOB NO	DRAWING No.	REV.
EWR 3391E	33013-540	10

CCN: 01 CONTROL COPY #

FOR 4th INTERVAL ISI USE ONLY REV. 0

CONTAINMENT AIR
33013-1882 Rev. 16

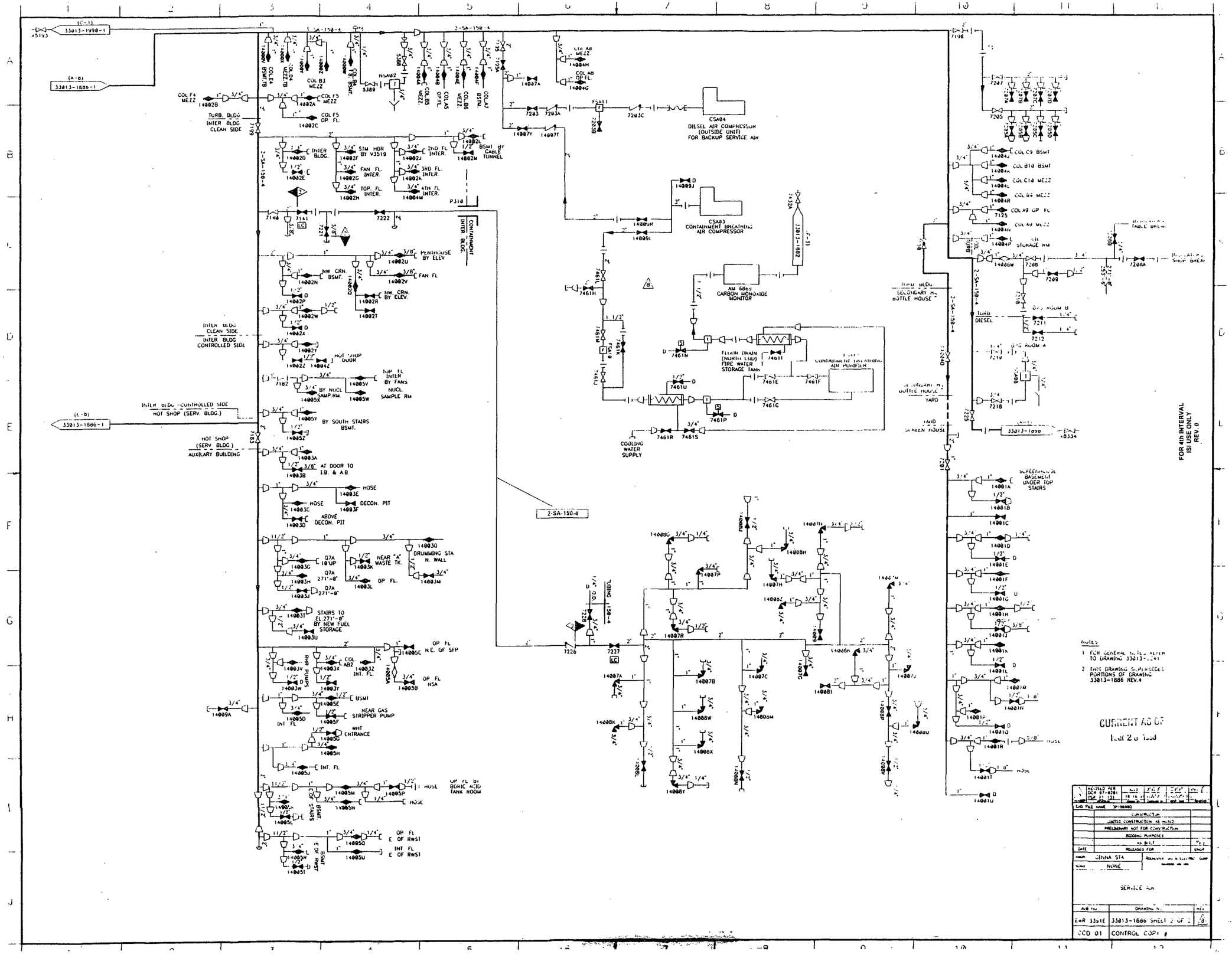

SERVICE AIR
33013-1886 Sheet 2 Rev. 8

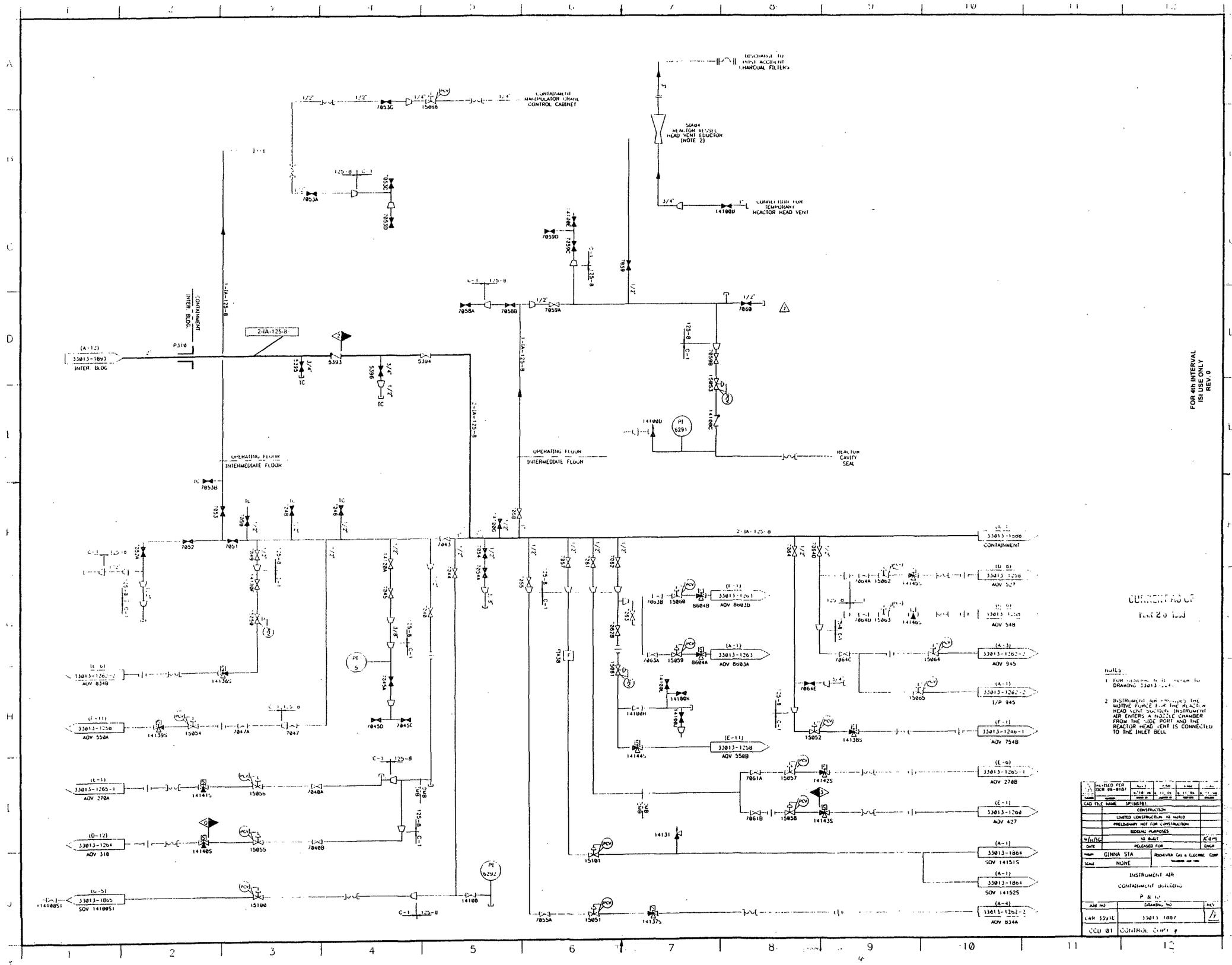

INSTRUMENT AIR
33013-1887 Rev. 7

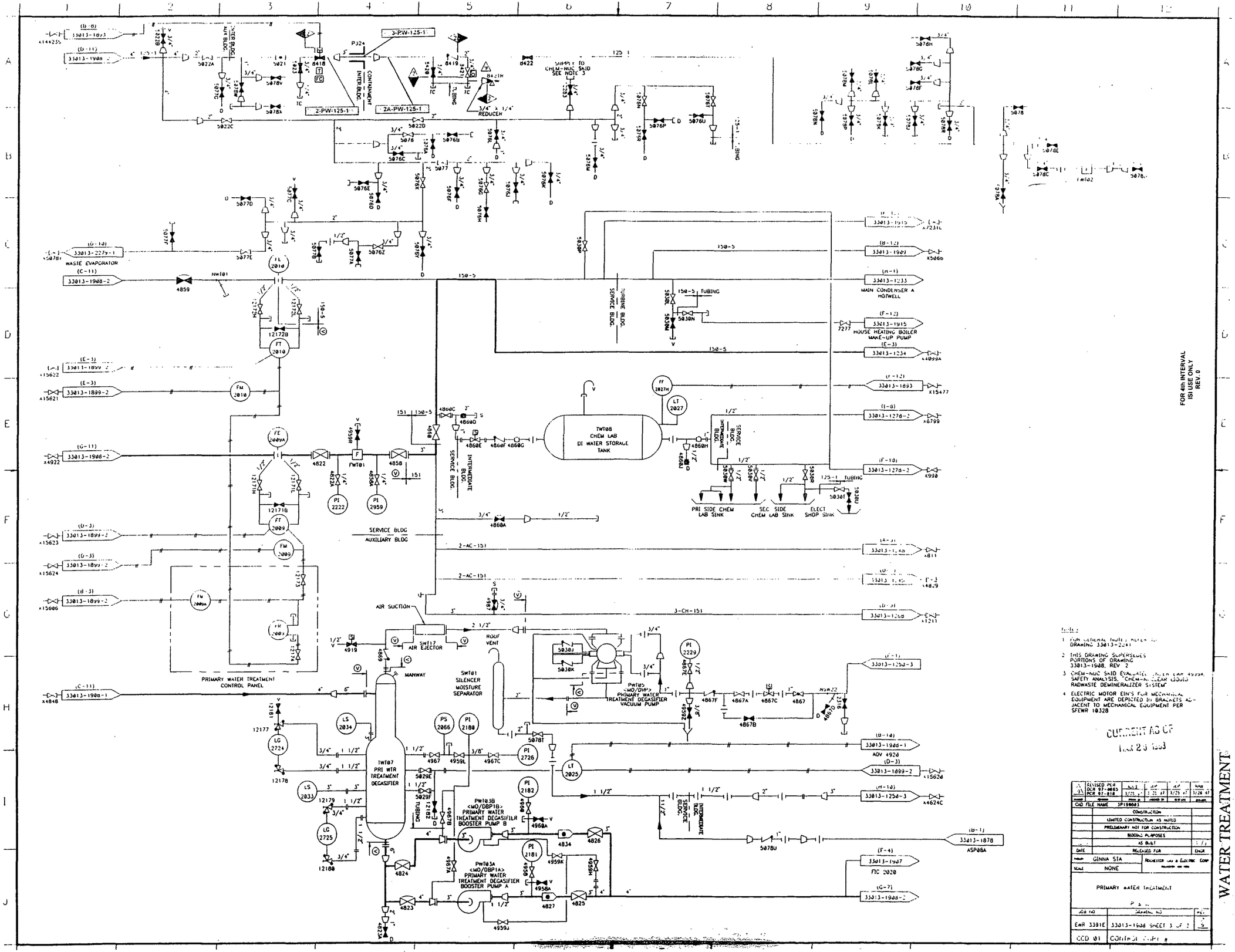

FOR 4th INTERVAL ISI USE ONLY REV. 0

WATER TREATMENT
33013-1908 Sheet 3 Rev 0

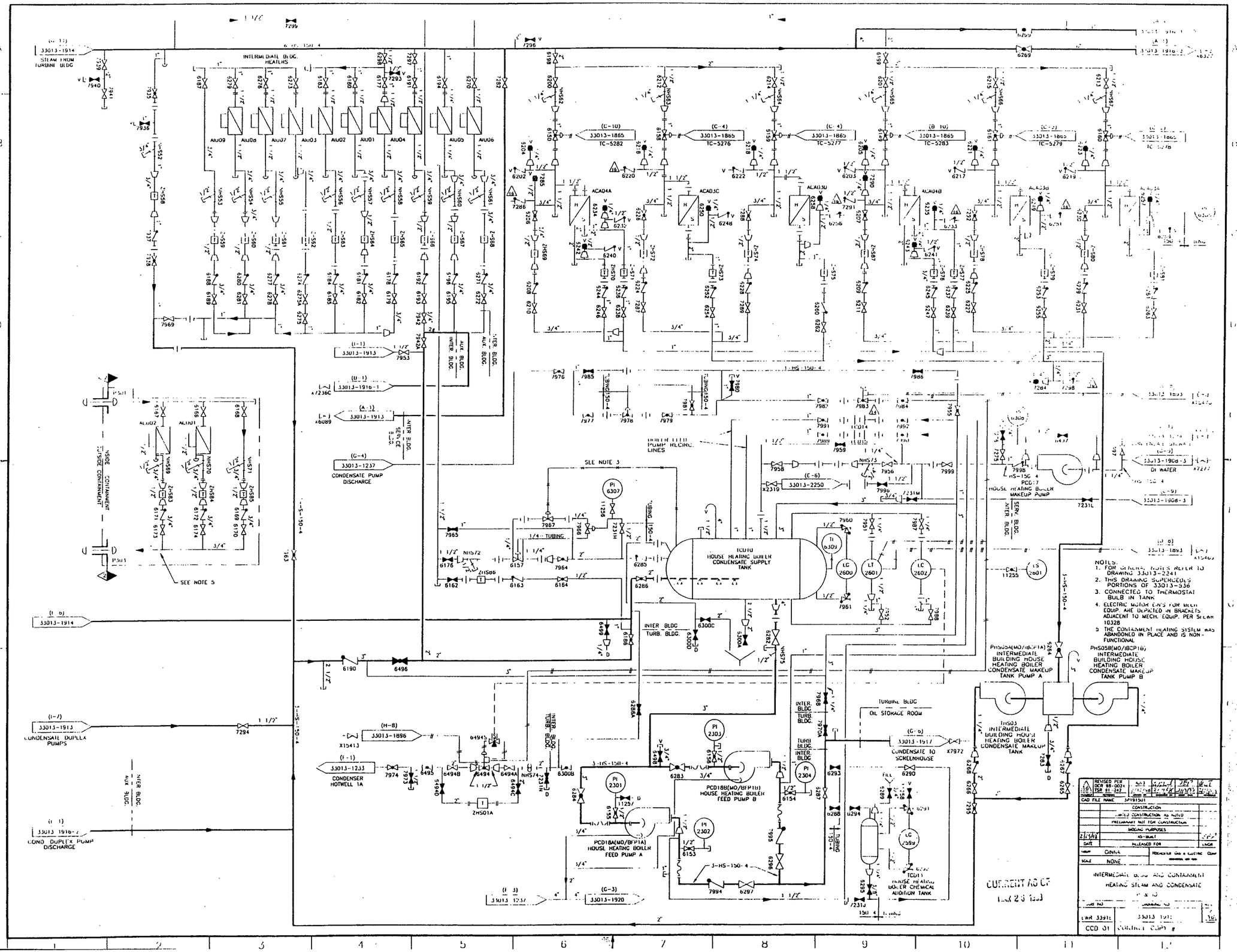
STEAM FROM TURBINE BLDG
INTERMEDIATE BLDG. HEATERS
CONDENSATE PUMP DISCHARGE
CONDENSATE DUPLEX PUMPS
COND. DUPLEX PUMP DISCHARGE
CONDENSER HOTWELL 1A
SEE NOTE 3
SEE NOTE 5
HOUSE HEATING BOILER CONDENSATE SUPPLY TANK
HOUSE HEATING BOILER FEED PUMP A
HOUSE HEATING BOILER FEED PUMP B
HOUSE HEATING BOILER MAKEUP PUMP
DI WATER
CONDENSATE TO SCREENHOUSE
HOUSE HEATING BOILER CHEMICAL ADDITION TANK
INTERMEDIATE BUILDING HOUSE HEATING BOILER CONDENSATE MAKEUP TANK PUMP A
INTERMEDIATE BUILDING HOUSE HEATING BOILER CONDENSATE MAKEUP TANK PUMP B
INTERMEDIATE BUILDING HOUSE HEATING BOILER CONDENSATE MAKEUP TANK
OIL STORAGE ROOM
NOTES:
1. FOR GENERAL NOTES REFER TO DRAWING 33013-2241
2. THIS DRAWING SUPERCEDES PORTIONS OF 33013-936
3. CONNECTED TO THERMOSTAT BULB IN TANK
4. ELECTRIC MOTOR CKTS FOR MECH. EQUIP. ARE DEPICTED IN BRACKETS ADJACENT TO MECH. EQUIP. PER SCHEM 10328
5. THE CONTAINMENT HEATING SYSTEM WAS ABANDONED IN PLACE AND IS NON-FUNCTIONAL
CURRENT AS OF
CONDENSATE
33013-1915 Rev. 16

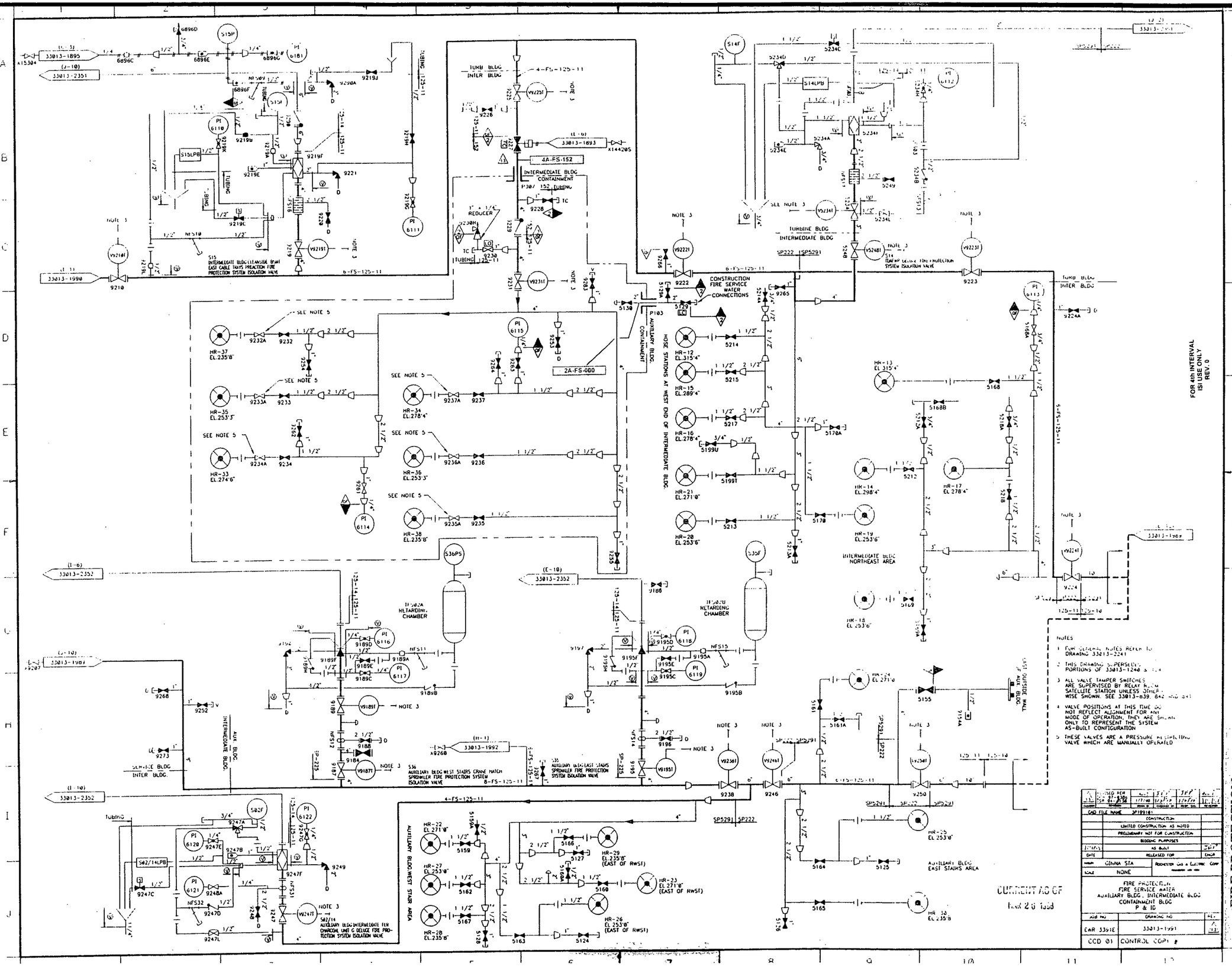

FIRE PROTECTION
33013-1991 Rev. 13

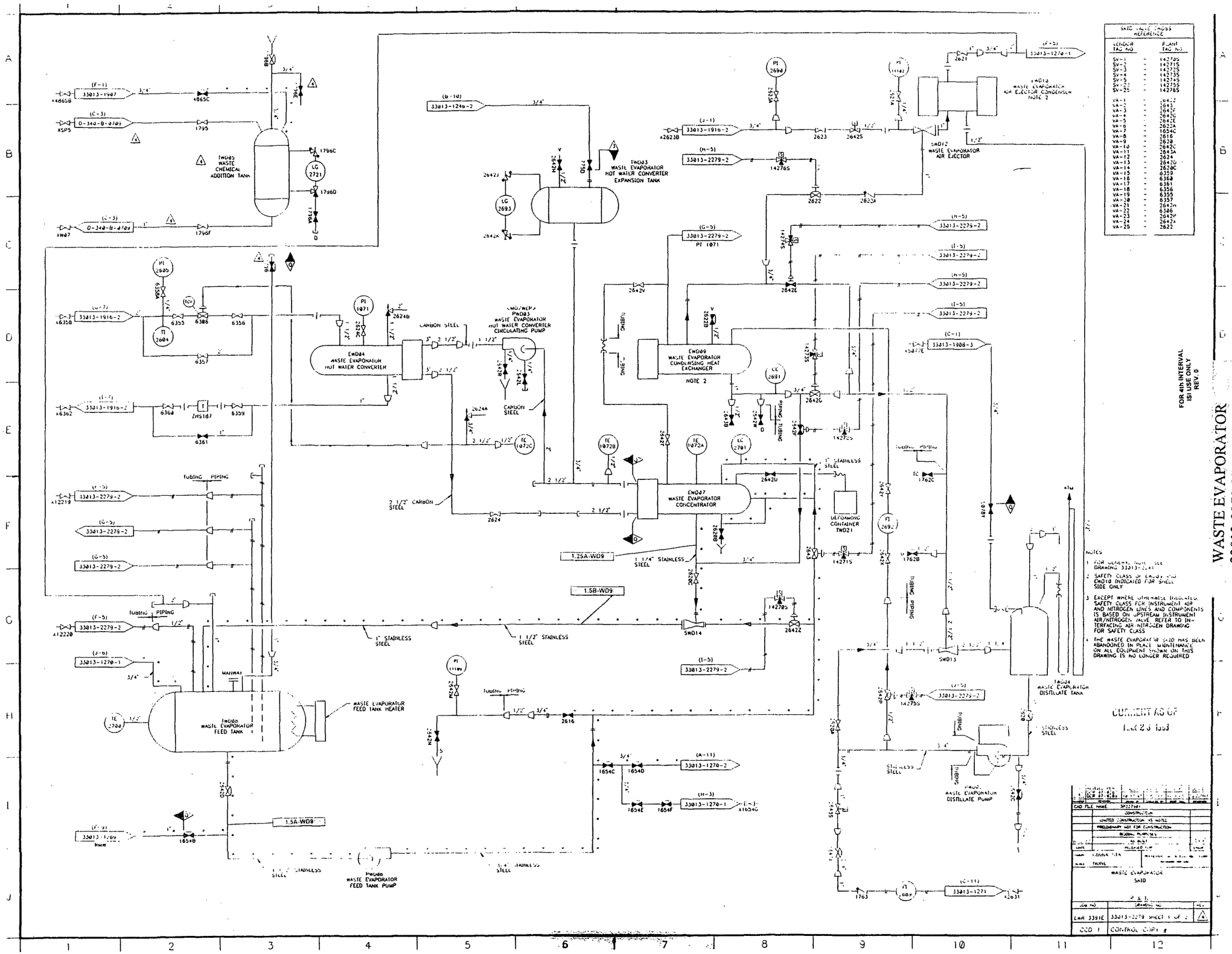
WASTE EVAPORATOR
33013-2279 SHEET 1 OF 2
FOR 4th INTERVAL ISUSE ONLY REV. 0
SWD10 WASTE EVAPORATOR AIR EJECTOR CONDENSER NOTE 2
SWD12 WASTE EVAPORATOR AIR EJECTOR
TWD03 WASTE EVAPORATOR HOT WATER CONVERTER EXPANSION TANK
TWD80 WASTE CHEMICAL ADDITION TANK
EWD04 WASTE EVAPORATOR HOT WATER CONVERTER
PWD03 WASTE EVAPORATOR HOT WATER CONVERTER CIRCULATING PUMP
EWD09 WASTE EVAPORATOR CONDENSING HEAT EXCHANGER
NOTE 2
EWD07 WASTE EVAPORATOR CONCENTRATOR
DEFOAMING CONTAINER TWD21
TWD04 WASTE EVAPORATOR DISTILLATE TANK
PWD05 WASTE EVAPORATOR DISTILLATE PUMP
TWD08 WASTE EVAPORATOR FEED TANK
WASTE EVAPORATOR FEED TANK HEATER
PWD08 WASTE EVAPORATOR FEED TANK PUMP
CARBON STEEL
1 STAINLESS STEEL
1 1/2" STAINLESS STEEL
2 1/2" CARBON STEEL
1.25A-WD9
1.5B-WD9
1.5A-WD9
MANWAY
TUBING PIPING
SWD14
SWD13
NOTES
1 FOR GENERAL NOTES SEE DRAWING 33013-1241
2 SAFETY CLASS OF EWD09 AND EWD10 INDICATED FOR SHELL SIDE ONLY
3 EXCEPT WHERE OTHERWISE INDICATED, SAFETY CLASS FOR INSTRUMENT AIR AND NITROGEN LINES AND COMPONENTS IS BASED ON UPSTREAM INSTRUMENT AIR/NITROGEN VALVE. REFER TO INTERFACING AIR NITROGEN DRAWING FOR SAFETY CLASS
4 THE WASTE EVAPORATOR SKID HAS BEEN ABANDONED IN PLACE. MAINTENANCE ON ALL EQUIPMENT SHOWN ON THIS DRAWING IS NO LONGER REQUIRED
CURRENT AS OF
WASTE EVAPORATOR
SKID
CAD FILE NAME
CONSTRUCTION
UNITED CONSTRUCTION AS NOTED
PRELIMINARY NOT FOR CONSTRUCTION
EAR 3391E
33013-2279 SHEET 1 OF 2
CCD 1
CONTROL CODE

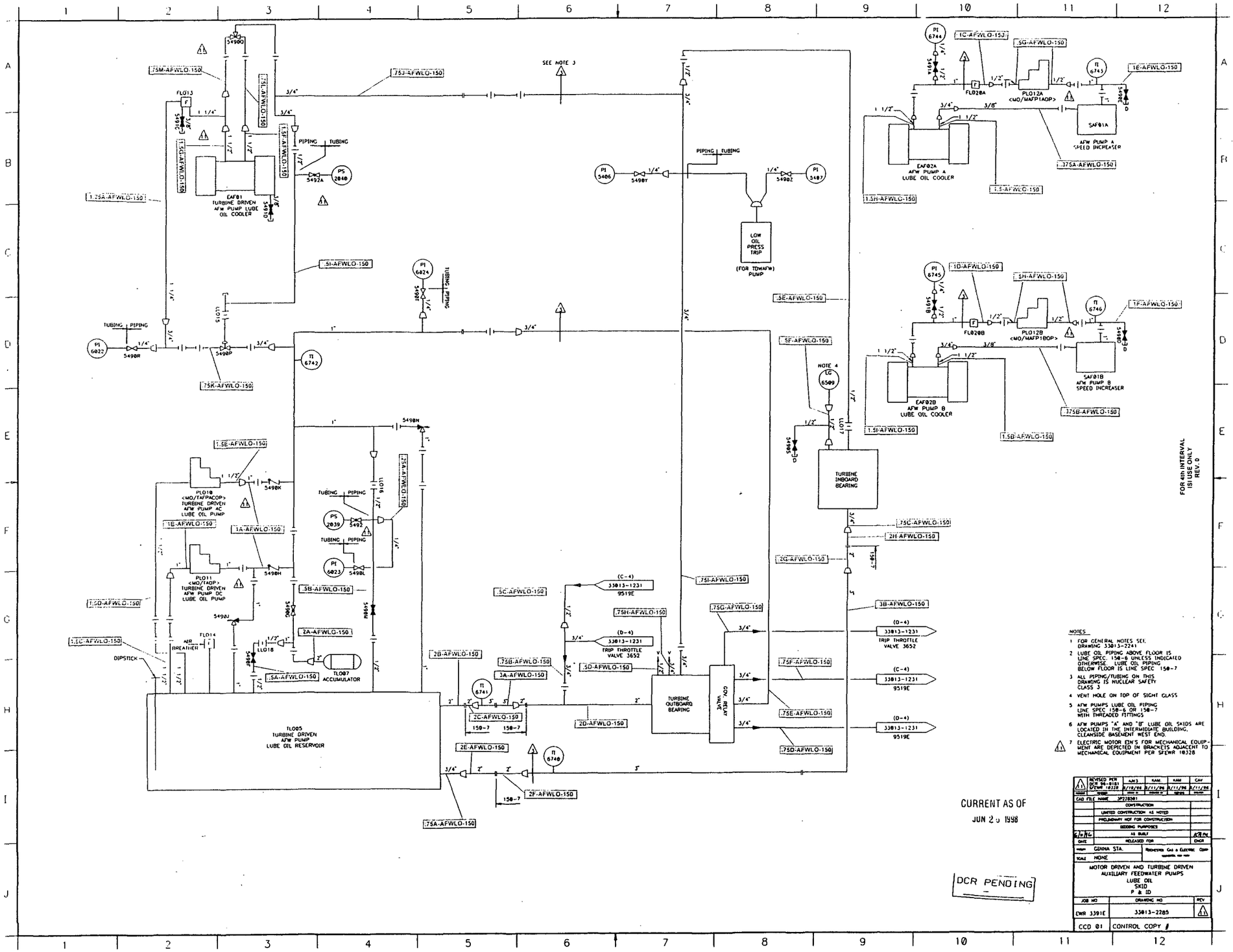

AUX FW PUMPS LUBE OIL
33013-2285 Rev. 11

1.0 General

The following Code Tables were developed to address applicable ASME Section XI requirements specifically to R. E. Ginna Nuclear Power Plant. ASME Section XI Code, 1995 Edition, 1996 Addenda, and 10CFR50 specify that this program conforms to Articles IWB, C, D, and F of ASME Section XI, as well as the 1992 Edition with 1992 Addenda for IWE and IWL if not altered by a Relief Request, Code Case and/or Regulation requirement/modification.

The following list identified the Code Table applicability.

Code Table #	Component Jurisdiction	Pages	Revision
1	Class 1	21	0
2	Class 2	10	0
3	Class 3	3	0
4	Class 1, 2 and 3 IWF Component Supports	1	0
5	Class MC	3	0
6	Class CC	2	0

R. E. GINNA NUCLEAR POWER PLANT
FOURTH INTERVAL INSERVICE INSPECTION (ISI) PROGRAM
SECTION 4 – CLASS 1 COMPONENTS
TABLE 1 – Revision 0

Examination Category	Item No.	Components and Parts to be Examined	Examination Methods	Examination Requirements for Fourth Inspection Interval	Examination Technique/Examination Area Comments
REACTOR PRESSURE VESSEL					
B-A	B1.10	Shell Welds			
	B1.11	Circumferential	Volumetric	100% of welds to be examined. 100% of weld length. May be deferred to end of interval.	Examination of circumferential welds will be performed with UT technique.
	B1.12	Longitudinal	Volumetric		There are no longitudinal Shell welds at R.E.Ginna.
B-A	B1.20	Head Welds			
	B1.21	Circumferential	Volumetric	N/A	There are no circumferential head welds at R.E.Ginna.
	B1.22	Meridonal	Volumetric	N/A	There are no meridonal head welds at R.E. Ginna.
B-A	B1.30	Shell - to - Flange Weld	Volumetric	100% of the weld to be examined. Relief Request No. 1 permits examination at end of interval.	The shell to flange weld will be examined from the vessel seal surface and from the vessel wall inside surface with UT.
B-A	B1.40	Head - to - Flange Weld	Volumetric and Surface	N/A	There is no Head-to-Flange Weld due to 2003 Head Replacement (there was one in old head).
B-A	B1.50	Repair Welds			
	B1.51	Beltline Region	N/A	N/A	No repair welds at R.E.Ginna.

R. E. GINNA NUCLEAR POWER PLANT
FOURTH INTERVAL INSERVICE INSPECTION (ISI) PROGRAM
SECTION 4 – CLASS 1 COMPONENTS
TABLE 1 – Revision 0

Examination Category	Item No.	Components and Parts to be Examined	Examination Methods	Examination Requirements for Fourth Inspection Interval	Examination Technique/Examination Area Comments
PRESSURIZER					
B-B	B2.10	Shell - to - Head Welds			
	B2.11	Circumferential	Volumetric	The upper and lower head to shell welds to be examined.	Examination will be performed with UT techniques.
	B2.12	Longitudinal	Volumetric	One foot of each longitudinal weld intersecting each head to shell weld.	Examination will be performed with UT techniques.
B-B	B2.20	Head Welds			
	B2.21	Circumferential	Volumetric	N/A	There are no Pressurizer Circumferential head welds at R.E.Ginna.
	B2.22	Meridonal	Volumetric	N/A	There are no Pressurizer meridonal head welds at R.E. Ginna.
STEAM GENERATORS (Primary Side)					
B-B	B2.30	Head Welds			
	B2.31	Circumferential	Volumetric	N/A	There are no Steam Generator lower head circumferential or meridonal welds at R.E.Ginna.
	B2.32	Meridonal	Volumetric	N/A	
B-B	B2.40	Tubesheet - Head Weld	Volumetric	The examination will be limited to one Steam Generator.	Examination will be performed with UT technique.

R. E. GINNA NUCLEAR POWER PLANT
FOURTH INTERVAL INSERVICE INSPECTION (ISI) PROGRAM
SECTION 4 – CLASS 1 COMPONENTS
TABLE 1 – Revision 0

Examination Category	Item No.	Components and Parts to be Examined	Examination Methods	Examination Requirements for Fourth Inspection Interval	Examination Technique/Examination Area Comments
HEAT EXCHANGERS (Primary Side) - Head					
B-B	B2.50	Head Welds	Volumetric	N/A	No circumferential or meridonal head welds in Heat Exchangers at R.E.Ginna.
	B2.51	Circumferential	Volumetric		
	B2.52	Meridional			
HEAT EXCHANGERS (Primary Side) – Shell					
B-B	B2.60	Tubesheet to Head Weld	Volumetric	Each tubesheet to head weld on one component will be examined.	Examination will be performed with UT technique. See RR number 4.
B-B	B2.70	Longitudinal Welds	Volumetric	N/A	There are no RHE longitudinal welds at R.E.Ginna.
B-B	B2.80	Tubesheet to Shell welds	Volumetric	Each tubesheet to shell weld on one component will be examined.	Examination will be performed with UT technique. See RR number 4.
REACTOR PRESSURE VESSEL (INSPECTION PROGRAM B)					
B-D	B3.90	Nozzle to Vessel Welds	Volumetric	100% of nozzles. May defer to end of interval.	The nozzle to vessel welds will be examined with UT.
B-D	B3.100	Nozzle Inside Radius Section	Volumetric	100% of nozzles. May defer to end of interval.	The nozzle inside radius sections will be examined with UT.

R. E. GINNA NUCLEAR POWER PLANT
FOURTH INTERVAL INSERVICE INSPECTION (ISI) PROGRAM
SECTION 4 – CLASS 1 COMPONENTS
TABLE 1 – Revision 0

Examination Category	Item No.	Components and Parts to be Examined	Examination Methods	Examination Requirements for Fourth Inspection Interval	Examination Technique/Examination Area Comments
PRESSURIZER (INSPECTION PROGRAM B)					
B-D	B3.110	Nozzle to Vessel Welds	Volumetric	N/A	No nozzle to vessel welds. Nozzles are integrally cast into the Pressurizer head.
B-D	B3.120	Nozzle Inside Radius Section	Volumetric	All inside radius areas to be examined.	Examination will be performed with UT technique.
STEAM GENERATORS (Primary Side) (INSPECTION PROGRAM B)					
B-D	B3.130	Nozzle to Vessel Welds	Volumetric	N/A	There are no Steam Generator nozzle to vessel welds. Nozzles are integrally cast into the Steam Generator heads.
B-D	B3.140	Nozzle Inside Radius Section	Volumetric	All nozzle inside radius areas will be examined.	Examinations will be performed with UT technique.
HEAT EXCHANGERS (Primary Side) (INSPECTION PROGRAM B)					
B-D	B3.150	Nozzle to Vessel Welds	Volumetric	All nozzle to shell and nozzle inside radius areas will be examined on one component. See RR-4 and –6.	Examinations will be performed with UT technique.
B-D	B3.160	Nozzle Inside Radius Section	Volumetric		

R. E. GINNA NUCLEAR POWER PLANT
FOURTH INTERVAL INSERVICE INSPECTION (ISI) PROGRAM
SECTION 4 – CLASS 1 COMPONENTS
TABLE 1 – Revision 0

Examination Category	Item No.	Components and Parts to be Examined	Examination Methods	Examination Requirements for Fourth Inspection Interval	Examination Technique/Examination Area Comments
REACTOR PRESSURE VESSEL (Dissimilar Metal Welds)					
B-F	B5.10	Nozzle to Safe End Butt Welds ≥ NPS 4	Volumetric and Surface	All nozzle to safe end butt welds ≥ NPS 4.	Exams may be performed coincident with the vessel nozzle exams required by B-D. See RR number 8.
B-F	B5.20	Nozzle to Safe End Butt Welds < NPS 4	Surface	N/A	No nozzle to safe end dissimilar metal butt welds < NPS 4 on reactor vessel.
B-F	B5.30	Nozzle to Safe End Socket Welds.	Surface	N/A	No nozzle to safe end dissimilar metal socket welds on reactor vessel.
PRESSURIZER (Dissimilar Metal Welds)					
B-F	B5.40	Nozzle to Safe end Butt Welds ≥ NPS 4.	Volumetric and Surface	All butt welds to be examined.	Examinations to be performed with PT and UT techniques.
B-F	B5.50	Nozzle to Safe End Butt Welds < NPS 4.	Surface	N/A	No nozzle to safe end dissimilar metal butt welds < NPS 4 on Pressurizer.
B-F	B5.60	Nozzle to Safe End Socket Welds.	Surface	N/A	No nozzle to safe end dissimilar metal socket welds on Pressurizer.

R. E. GINNA NUCLEAR POWER PLANT
FOURTH INTERVAL INSERVICE INSPECTION (ISI) PROGRAM
SECTION 4 – CLASS 1 COMPONENTS
TABLE 1 – Revision 0

Examination Category	Item No.	Components and Parts to be Examined	Examination Methods	Examination Requirements for Fourth Inspection Interval	Examination Technique/Examination Area Comments
STEAM GENERATORS (Dissimilar Metal Welds)					
B-F	B5.70	Nozzle to Safe End Butt Welds ≥ NPS 4.	Volumetric and Surface	All nozzle to safe end dissimilar metal welds.	Examinations will be performed with PT and UT and/or RT techniques.
B-F	B5.80	Nozzle to Safe End Butt Welds < NPS 4	Surface	N/A	There are no steam generator welds of this type at R.E.Ginna.
B-F	B5.90	Nozzle to Safe End Socket Welds	Surface	N/A	There are no steam generator welds of this type at R.E.Ginna.
HEAT EXCHANGERS (Dissimilar Metal Welds)					
B-F	B5.100	Nozzle to Safe End Butt Welds ≥ NPS 4	Volumetric and Surface	N/A	There are no dissimilar metal butt nor socket welds on heat exchangers.
B-F	B5.110	Nozzle to Safe End Butt Welds < NPS	Surface	N/A	There are no dissimilar metal butt nor socket welds on heat exchangers.
B-F	B5.120	Nozzle to Safe End Socket Welds	Surface	N/A	There are no dissimilar metal butt nor socket welds on heat exchangers.

R. E. GINNA NUCLEAR POWER PLANT
FOURTH INTERVAL INSERVICE INSPECTION (ISI) PROGRAM
SECTION 4 – CLASS 1 COMPONENTS
TABLE 1 – Revision 0

Examination Category	Item No.	Components and Parts to be Examined	Examination Methods	Examination Requirements for Fourth Inspection Interval	Examination Technique/Examination Area Comments
REACTOR PRESSURE VESSEL (Pressure Retaining Bolting > 2" in Diameter)					
B-G-1	B6.10	Closure Head Nuts > 2 inches in diameter	Visual VT-1	All nuts to be examined May be performed at or near end of the inspection interval.	Nuts will be examined by VT-1 on accessible areas while in place or all surfaces when connection is disassembled.
B-G-1	B6.20	Closure Head Studs > 2 inches in diameter, in place	Volumetric	All studs to be examined Examination may be performed at or near the end of interval. Item B6.30 may be performed if possible.	Examinations may be performed "in place". Examinations should be scheduled when studs are removed to reduce radiation exposure and alloy the most thorough examination.
B-G-1	B6.30	Closure Head Studs > 2 inches in diameter, when removed	Volumetric and Surface	All studs to be examined Examinations may be performed at or near the end of the interval. Item B6.30 may be performed if possible.	The studs will be examined with UT and MT techniques.
B-G-1	B6.40	Threads in Flange	Volumetric	All Threads in Flange Stud Holes	Exams may be performed at or near the end of interval.

R. E. GINNA NUCLEAR POWER PLANT
FOURTH INTERVAL INSERVICE INSPECTION (ISI) PROGRAM
SECTION 4 – CLASS 1 COMPONENTS
TABLE 1 – Revision 0

Examination Category	Item No.	Components and Parts to be Examined	Examination Methods	Examination Requirements for Fourth Inspection Interval	Examination Technique/Examination Area Comments
PRESSURIZER (Pressure Retaining Bolting > 2" in Diameter)					
B-G-1	B6.50	Closure Washers and Bushings > 2" in diameter	Visual VT-1	All washers & bushings to be examined upon stud removal.	Exams may be performed at or near the end of interval.
B-G-1	B6.60	Bolting > 2 inches in diameter	Volumetric	N/A	No pressure retaining bolting on Pressurizer > 2" in diameter at R.E.Ginna
B-G-1	B6.70	Flange surface connection > 2" when disassembled	Visual VT-1	N/A	No pressure retaining bolting on Pressurizer > 2" in diameter at R.E.Ginna
B-G-1	B6.80	Nuts, bushings, & washers > 2" in diameter	Visual VT-1	N/A	No pressure retaining bolting on Pressurizer > 2" in diameter at R.E.Ginna
STEAM GENERATORS (Pressure Retaining Bolting > 2" in Diameter)					
B-G-1	B6.90	Bolting > 2" in diameter	Volumetric	N/A	No pressure retaining bolting on steam generators > 2" in diameter at R.E.Ginna
B-G-1	B6.100	Flange surface connection > 2", when disconnected	Visual VT-1	N/A	No pressure retaining bolting on steam generators > 2" in diameter at R.E.Ginna
B-G-1	B6.110	Nuts, bushings & washers > 2" in diameter.	Visual VT-1	N/A	No pressure retaining bolting on steam generators > 2" in diameter at R.E.Ginna

R. E. GINNA NUCLEAR POWER PLANT
FOURTH INTERVAL INSERVICE INSPECTION (ISI) PROGRAM
SECTION 4 – CLASS 1 COMPONENTS
TABLE 1 – Revision 0

Examination Category	Item No.	Components and Parts to be Examined	Examination Methods	Examination Requirements for Fourth Inspection Interval	Examination Technique/Examination Area Comments
HEAT EXCHANGERS (Pressure Retaining Bolting > 2" in Diameter)					
B-G-1	B6.120	Bolts and Studs > 2" dia.	Volumetric	N/A	No pressure retaining bolting > 2" in diameter on Heat Exchangers at R. E. Ginna
B-G-1	B6.130	Flange Surfaces > 2" dia.	Visual VT-1	N/A	No pressure retaining bolting > 2" in diameter on Heat Exchangers at R. E. Ginna
B-G-1	B6.140	Nuts, bushings, & washers > 2" in diameter	Visual VT-1	N/A	No pressure retaining bolting > 2" in diameter on Heat Exchangers at R. E. Ginna
PIPING (Pressure Retaining Bolting > 2" in diameter)					
B-G-1	B6.150	Bolts and Studs	Volumetric	N/A	No pressure retaining bolting > 2" in diameter on piping at R.E.Ginna.
B-G-1	B6.160	Flange Surface, when connection disassembled	Visual VT-1	N/A	No pressure retaining bolting > 2" in diameter on piping at R.E.Ginna.
B-G-1	B6.170	Nuts, bushings, & washers	Visual VT-1	N/A	No pressure retaining bolting > 2" in diameter on piping at R.E.Ginna.

R. E. GINNA NUCLEAR POWER PLANT
FOURTH INTERVAL INSERVICE INSPECTION (ISI) PROGRAM
SECTION 4 – CLASS 1 COMPONENTS
TABLE 1 – Revision 0

Examination Category	Item No.	Components and Parts to be Examined	Examination Methods	Examination Requirements for Fourth Inspection Interval	Examination Technique/Examination Area Comments
PUMPS (Pressure Retaining Bolting > 2" in diameter)					
B-G-1	B6.180	Bolts and Studs	Volumetric	All bolts and studs to be examined for items associated with one component in a multi-component group	The bolts will be examined with UT. This bolting may be examined in place under tension or when disassembled or removed.
B-G-1	B6.190	Flange Surfaces, when connection disassembled	Visual VT-1	Examination includes 1" annular surface of flange around each stud hole when disassembled	VT examinations will be performed when disassembled
B-G-1	B6.200	Nuts, bushings, & washers	Visual VT-1	All nuts, bushings, and washers to be examined when disassembled on one component in a multi component group	VT examinations will be performed when connection is disassembled

R. E. GINNA NUCLEAR POWER PLANT
FOURTH INTERVAL INSERVICE INSPECTION (ISI) PROGRAM
SECTION 4 – CLASS 1 COMPONENTS
TABLE 1 – Revision 0

Examination Category	Item No.	Components and Parts to be Examined	Examination Methods	Examination Requirements for Fourth Inspection Interval	Examination Technique/Examination Area Comments
VALVES (Pressure Retaining Bolting > 2" in diameter)					
B-G-1	6.210	Bolts and Studs	Volumetric	N/A	No pressure retaining bolting > 2" in diameter on valves at R.E.Ginna.
B-G-1	6.220	Flange Surface, when connection disassembled	Visual VT-1	N/A	No pressure retaining bolting > 2" in diameter on valves at R.E.Ginna.
B-G-1	6.230	Nuts, bushings, & washers	Visual VT-1	N/A	No pressure retaining bolting > 2" in diameter on valves at R.E.Ginna.
REACTOR PRESSURE VESSEL (Pressure Retaining Bolting ≤ 2" in diameter)					
B-G-2	B7.10	Bolts, Studs, and Nuts	Visual VT-1	N/A	No pressure retaining bolting ≤ 2" on RPV.
PRESSURIZER (Pressure Retaining Bolting ≤ 2" in diameter)					
B-G-2	B7.20	Bolts, Studs, and Nuts	Visual VT-1	All bolts, studs, and nuts to be examined	Bolting examination may be performed in place under tension or when removed.
STEAM GENERATORS (Pressure Retaining Bolting ≤ 2" in diameter)					
B-G-2	B7.30	Bolts, Studs, and Nuts	Visual VT-1	All bolts, studs, and nuts will be limited to one of two Steam Generators.	Examinations may be performed in place under tension or when removed.

R. E. GINNA NUCLEAR POWER PLANT
FOURTH INTERVAL INSERVICE INSPECTION (ISI) PROGRAM
SECTION 4 – CLASS 1 COMPONENTS
TABLE 1 – Revision 0

Examination Category	Item No.	Components and Parts to be Examined	Examination Methods	Examination Requirements for Fourth Inspection Interval	Examination Technique/Examination Area Comments
HEAT EXCHANGERS (Pressure Retaining Bolting ≤ 2" in diameter)					
B-G-2	B7.40	Bolts, Studs, and Nuts	Visual VT-1	N/A	No pressure retaining bolting ≤ 2" on heat exchangers.
PIPING (Pressure Retaining Bolting ≤ 2" in diameter)					
B-G-2	B7.50	Bolts, Studs, and Nuts	Visual VT-1	N/A	No pressure retaining bolting ≤ 2" on piping.
PUMPS (Pressure Retaining Bolting ≤ 2" in diameter)					
B-G-2	B7.60	Bolts, Studs, and Nuts	Visual VT-1	N/A	No pressure retaining bolting ≤ 2" on pumps
VALVES(Pressure Retaining Bolting ≤ 2" in diameter)					
B-G-2	B7.70	Bolts, Studs, and Nuts	Visual VT-1	All Bolts, Studs, and Nuts	Pressure retaining bolting ≤ 2" on valves limited to components selected for examination under category B-B, B-J, B-L-2, and B-M-2

R. E. GINNA NUCLEAR POWER PLANT
FOURTH INTERVAL INSERVICE INSPECTION (ISI) PROGRAM
SECTION 4 – CLASS 1 COMPONENTS
TABLE 1 – Revision 0

Examination Category	Item No.	Components and Parts to be Examined	Examination Methods	Examination Requirements for Fourth Inspection Interval	Examination Technique/Examination Area Comments
PIPING					
B-J	B9.10	NPS 4 or larger			
B-J	B9.11	Circumferential Welds	Volumetric and Surface	25% of required circumferential butt welds to be examined. (See note 1)	The piping welds will be examined with UT and/or RT and PT. See RR number 4.
B-J	B9.20	Less than NPS 4			
B-J	B9.21	Circumferential Welds	Surface	25% of required circumferential butt welds to be examined. (See note 1)	The piping welds will be examined with PT.
B-J	B9.30	Branch Connection Welds			
B-J	B9.31	NPS 4 or larger	Volumetric and Surface	25% of the required pipe connection welds to be examined. (See note 1)	The branch connection welds will be examined with UT and PT.
B-J	B9.32	Less than NPS 4	Surface	25% of the required Socket welds to be examined. (See note 1)	The branch connection welds will be examined with PT.
B-J	B9.40	Socket Welds	Surface	25% of the required Socket welds to be examined. (See note 1)	The socket welds shall be examined with PT.

R. E. GINNA NUCLEAR POWER PLANT
FOURTH INTERVAL INSERVICE INSPECTION (ISI) PROGRAM
SECTION 4 – CLASS 1 COMPONENTS
TABLE 1 – Revision 0

Examination Category	Item No.	Components and Parts to be Examined	Examination Methods	Examination Requirements for Fourth Inspection Interval	Examination Technique/Examination Area Comments
PRESSURE VESSELS					
B-K	B10.10	Welded Attachments	Surface	For multiple vessels of similar design examine only one welded attachment of one vessel	Welded attachments shall be examined with PT.
PIPING					
B-K	B10.20	Welded Attachments	Surface	10% sample of all integrally attached component supports shall be examined	Welded attachments shall be examined with PT.
PUMPS					
B-K	B10.30	Welded Attachments	Surface	10% sample of all integrally attached component supports shall be examined.	Welded attachments shall be examined with PT.
VALVES					
B-K	B10.40	Welded Attachments	Surface	10% sample of all integrally attached component supports shall be examined.	No Integrally welded attachments on valves.

R. E. GINNA NUCLEAR POWER PLANT
FOURTH INTERVAL INSERVICE INSPECTION (ISI) PROGRAM
SECTION 4 – CLASS 1 COMPONENTS
TABLE 1 – Revision 0

Examination Category	Item No.	Components and Parts to be Examined	Examination Methods	Examination Requirements for Fourth Inspection Interval	Examination Technique/Examination Area Comments
PUMPS					
B-L-1	B12.10	Pump Casing Welds	VT-1	Casing welds on one pump to be examined.	Examination performed in accordance with Code Case N-481.
B-L-2	B12.20	Pump Casings	Visual VT-3	One pump to be examined when disassembled.	Pump casing internal surface will be examined when disassembled for maintenance in accordance with Code Case N-481. (See Code Note #2)
VALVES					
B-M-1	B12.30	Valve Body Welds < NPS 4	Surface	N/A	No pressure retaining welds in valve bodies < NPS 4
B-M-1	B12.40	Valve Body Welds ≥ NPS 4	Volumetric	All welds on one valve in each group of valves that is of the same construction and similar function to be examined	Valve welds will be examined with UT on a selected component within the valve group.
B-M-2	B12.50	Internal Surfaces of Valve Bodies - Valves > NPS 4	Visual VT-3	One valve in each group of valves that is of the same construction and similar function to be examined.	Internal surfaces of the valve body to be examined with VT-3. (See Code Note #2)

R. E. GINNA NUCLEAR POWER PLANT
FOURTH INTERVAL INSERVICE INSPECTION (ISI) PROGRAM
SECTION 4 – CLASS 1 COMPONENTS
TABLE 1 – Revision 0

Examination Category	Item No.	Components and Parts to be Examined	Examination Methods	Examination Requirements for Fourth Inspection Interval	Examination Technique/Examination Area Comments
REACTOR PRESSURE VESSEL					
B-N-1	B13.10	Vessel Interior	Visual VT-3	Accessible areas to be examined during each inspection period.	Accessible Vessel Interior shall be examined with VT-3 each period.
B-N-2	B13.50	Interior Attachments within Beltline Region	Visual VT-1	Accessible attachment welds to be examined.	There are no Interior Attachments within the Beltline Region of the RPV.
B-N-2	B13.60	Interior Attachments beyond Beltline Region	Visual VT-3	Accessible attachment welds to be examined.	Examinations may be completed at or near the end of the inspection interval.
B-N-3	B13.70	Core Support Structure	Visual VT-3	With core support structure removed, all accessible surfaces to be examined.	Examinations may be completed at or near the end of the inspection interval.
CONTROL ROD HOUSINGS IN REACTOR VESSEL					
B-O	B14.10	Control Rod Drive Housing Welds	Volumetric or Surface	Welds in 10% of the peripheral CRD housing to be examined. Examination may be performed at or near the end of the inspection interval.	The CRD housing will be examined with PT or UT.

R. E. GINNA NUCLEAR POWER PLANT
FOURTH INTERVAL INSERVICE INSPECTION (ISI) PROGRAM
SECTION 4 – CLASS 1 COMPONENTS
TABLE 1 – Revision 0

Examination Category	Item No.	Components and Parts to be Examined	Examination Methods	Examination Requirements for Fourth Inspection Interval	Examination Technique/Examination Area Comments
REACTOR VESSEL					
B-P	B15.10	RPV Pressure Retaining Boundary	VT-2	All components to be examined during system leakage test. Examinations to be performed in accordance with IWB-5220 prior to plant start-up after each refueling outage.	VT examinations will be performed in accordance with IWA-5240.
PRESSURIZER					
B-P	B15.20	Pressure Retaining Boundaries	VT-2	All Pressurizer components to be examined during system leakage test. Examinations to be performed in accordance with IWB-5220 prior to plant startup after each refueling outage.	VT examinations will be performed in accordance with IWB-5240.

R. E. GINNA NUCLEAR POWER PLANT
FOURTH INTERVAL INSERVICE INSPECTION (ISI) PROGRAM
SECTION 4 – CLASS 1 COMPONENTS
TABLE 1 – Revision 0

Examination Category	Item No.	Components and Parts to be Examined	Examination Methods	Examination Requirements for Fourth Inspection Interval	Examination Technique/Examination Area Comments
STEAM GENERATORS					
B-P	B15.30	Pressure Retaining Boundaries	VT-2	All Steam Generator components to be examined during system leakage test. Examinations to be performed in accordance with IWB-5220 prior to plant start up after each outage.	VT examinations will be performed in accordance with IWB-5240.
HEAT EXCHANGERS					
B-P	B15.40	Pressure Retaining Boundaries	VT-2	All Heat Exchanger components to be performed in accordance with IWB-5220 prior to plant start up after each refueling outage.	VT examinations will be performed in accordance with IWB-5240.

R. E. GINNA NUCLEAR POWER PLANT
FOURTH INTERVAL INSERVICE INSPECTION (ISI) PROGRAM
SECTION 4 – CLASS 1 COMPONENTS
TABLE 1 – Revision 0

Examination Category	Item No.	Components and Parts to be Examined	Examination Methods	Examination Requirements for Fourth Inspection Interval	Examination Technique/Examination Area Comments
PIPING					
B-P	B15.50	Pressure Retaining Boundaries	VT-2	All Piping components to be performed in accordance with IWB-5220 prior to plant startup after each refueling outage.	VT examinations will be performed in accordance with IWB-5240.
PUMPS					
B-P	B15.60	Pressure Retaining Boundaries	VT-2	All pump components to be performed in accordance with IWB-5220 prior to plant start up after each refueling outage.	VT examinations will be performed in accordance with IWB-5240.
VALVES					
B-P	B15.70	Pressure Retaining Boundaries	VT-2	All valve components to be examined during system leakage test. Examinations to be performed in accordance with IWB-5220 prior to plant start up after each refueling outage.	VT examinations will be performed in accordance with IWB-5240.

R. E. GINNA NUCLEAR POWER PLANT
FOURTH INTERVAL INSERVICE INSPECTION (ISI) PROGRAM
SECTION 4 – CLASS 1 COMPONENTS
TABLE 1 – Revision 0

Examination Category	Item No.	Components and Parts to be Examined	Examination Methods	Examination Requirements for Fourth Inspection Interval	Examination Technique/Examination Area Comments
STEAM GENERATORS					
B-Q	B16.20	U-Bend tubing	Volumetric	The tubing in the hot leg side, and optionally cold leg side will be examined.	Examination requirements, examination method, and the extent and frequency of examination shall be in accordance with Plant Technical Specifications and Section 11 of the Inservice Inspection Program.
PUMPS					
Flywheel	WCAP	Pump Flywheels	Volumetric and Surface	Each reactor pump flywheel to be examined per Westinghouse WCAP-15666A.	Examinations will be performed on the two active components as defined within Section 11 of the Inservice Inspection Program.

Table 1
NOTES

(1) As allowed by 10CFR(a)(b)(2)(ii), ASME Section XI 1974 Edition with addenda through 1975 is permitted for category B-J weld selection and does not utilize level criteria. Category B-J weld selection shall be performed to ASME Section XI, 1995 Edition, 1996 Addenda and shall not utilize stress level criteria. Examinations selected shall be distributed in such a manner to include:

(a) All accessible Terminal Ends in each pipe or branch run connected to vessels.

(b) All accessible Terminal Ends and joints in each pipe or branch run connected to other components such as pumps, branches, and anchors.

(c) All dissimilar metal welds not covered under Category B-F.

(d) Additional piping welds (structural discontinuity welds) so that the total number of circumferential butt welds (or branch connection or socket welds) selected for examination equals 25% of the circumferential butt welds (or branch connection or socket welds) in the Reactor Coolant piping system. This total does not include welds excluded by IWB-1220. These additional welds may be located in one loop and shall be selected among the Class 1 systems, prorated, to the degree practical.

(2) Terminal End (TE) Welds are defined as the extremities of piping runs that connect to structures, components, or pipe anchors, each of which acts as a rigid restraint or provides a least two degrees of restraint to piping thermal expansion.
This definition (ref. IWA9000) is interpreted to include the following:

(a) Circumferential welds within 3 pipe diameters of the centerline of rigid pipe anchors or anchors at penetrations of the primary reactor containment.

(b) Piping connection welds in which the main process piping is at least 3 times larger than the Branch Run. components, such as vessels, pumps, etc...

Terminal Ends at component or branch connections are considered to be the piping weld connection to the safe-end, nozzle, reducer, weldolet, sockolet or flange.
Structural Discontinuity (SD) Welds includes circumferential weld joints at pipe-to-nozzle, pipe-to-valve, pipe-to-pump, or pipe-to-fitting. Fitting-to-fitting connections and all socket welded connections shall be considered Structural Discontinuities.

R. E. GINNA NUCLEAR POWER PLANT
FOURTH INTERVAL INSERVICE INSPECTION (ISI) PROGRAM
SECTION 4 – CLASS II COMPONENTS
TABLE 2 – Revision 0

Examination Category	Item No.	Components and Parts to be Examined	Examination Methods	Examination Requirements for Fourth Inspection Interval	Examination Technique/Examinatiion Area Comments
PRESSURE VESSELS					
C-A	C1.10	Shell Circumferential Welds	Volumetric	100% of each weld at gross structural discontinuities. For multiple vessels of similar design, size, and service, exams may be limited to one vessel.	The welds will be examined with UT.
C-A	C1.20	Head Circumferential Welds	Volumetric	100% of each head to shell weld to be examined For multiple vessels of similar design, size, and service, exams may be limited to one vessel.	The welds will be examined with UT.
C-A	C1.30	Tubesheet to Shell Welds	Volumetric	100% of each weld to be examined. For multiple vessels of similar design, size, and service, examinations may be limited to one vessel.	The welds will be examined with UT.

R. E. GINNA NUCLEAR POWER PLANT
FOURTH INTERVAL INSERVICE INSPECTION (ISI) PROGRAM
SECTION 4 – CLASS II COMPONENTS
TABLE 2 – Revision 0

Examination Category	Item No.	Components and Parts to be Examined	Examination Methods	Examination Requirements for Fourth Inspection Interval	Examination Technique/Examinatiion Area Comments
NOZZLE WELDS IN VESSELS					
C-B	C2.10	Nozzles w/o Reinforcing plate in Vessels > 1/2 in. nominal thickness.			
C-B	C2.11	Nozzle to Shell (or Head) Weld	Surface	N/A	No nozzles in vessels ≤ 1/2 inch nominal thickness Nozzle to Shell (or Head) Welds at R.E.Ginna.
C-B	C2.20	Nozzles w/o Reinforcing plate in Vessels 1/2 inch Nominal Thickness			
C-B	C2.21	Nozzle to Shell (or Head) Weld	Surface and Volumetric	All Nozzles at terminal ends of piping runs.	Welds will be examined with UT & MT.
C-B	C2.22	Nozzle Inside Radius Section	Volumetric	All Nozzles at terminal ends of piping runs.	The Nozzle Inside Radius Section will be examined with UT.
C-B	C2.30	Nozzles with Reinforcing plate in vessels > 1/2 in. nominal thickness			
C-B	C2.31	Reinforcing Plate Welds Surface to Nozzle & vessel	Surface	All nozzles at terminal ends of pipe runs	The reinforcing plate welds will be examined with PT or MT as applicable.

R. E. GINNA NUCLEAR POWER PLANT
FOURTH INTERVAL INSERVICE INSPECTION (ISI) PROGRAM
SECTION 4 – CLASS II COMPONENTS
TABLE 2 – Revision 0

Examination Category	Item No.	Components and Parts to be Examined	Examination Methods	Examination Requirements for Fourth Inspection Interval	Examination Technique/Examinatiion Area Comments
NOZZLE WELDS IN VESSELS (Con't)					
C-B	C2.32	Nozzle to Shell (or Head) Welds when inside of Vessel is accessible	N/A	All nozzles at terminal ends of pipe runs.	The inside of the vessel is not accessible, perform C2.33 instead.
C-B	C2.33	Nozzle to Shell (or Head) Welds when inside of Vessel is inaccessible.	VT-2	All nozzles at terminal ends of pipe runs. See note 5.	VT examinations will be performed in accordance with IWA-5240. The required components to be examined during system leakage test.
PRESSURE VESSELS					
C-C	C3.10	Integrally Welded Attachments with base material ≥ 3/4 inch.	Surface	100% of each weld to be examined. See note # 6.	The welded attachments will be examined with MT or PT. See RR # 16.
PIPING					
C-C	C3.20	Integrally Welded Attachments	Surface	10% sample required. Supports selected under IWF-2501. See note #6.	The welds will be examined with MT or PT as applicable. See RR # 7.
PUMPS					
C-C	3.30	Integrally Welded Attachments	Surface	N/A	No pumps meet this criteria at R.E.Ginna.

R. E. GINNA NUCLEAR POWER PLANT
FOURTH INTERVAL INSERVICE INSPECTION (ISI) PROGRAM
SECTION 4 – CLASS II COMPONENTS
TABLE 2 – Revision 0

Examination Category	Item No.	Components and Parts to be Examined	Examination Methods	Examination Requirements for Fourth Inspection Interval	Examination Technique/Examinatiion Area Comments
VALVES					
C-C	3.40	Integrally Welded Attachments	Surface	N/A	No valves meet this criteria at R.E.Ginna.
PRESSURE VESSELS (Pressure Retaining Bolting > 2 inches)					
C-D	C4.10	Bolts and Studs	Volumetric	N/A	No pressure retaining vessel bolting > 2"
PIPING (Pressure Retaining Bolting > 2 inches)					
C-D	C4.20	Bolts and Studs	Volumetric	N/A	No pressure retaining piping bolting > 2"
PUMPS (Pressure Retaining Bolting > 2 inches)					
C-D	C4.30	Bolts and Studs	Volumetric	N/A	No pressure retaining pump bolting > 2"
PUMPS (Pressure Retaining Bolting > 2 inches)					
C-D	C4.40	Bolts and Studs	Volumetric	N/A	No pressure retaining valve bolting > 2"

R. E. GINNA NUCLEAR POWER PLANT
FOURTH INTERVAL INSERVICE INSPECTION (ISI) PROGRAM
SECTION 4 – CLASS II COMPONENTS
TABLE 2 – Revision 0

Examination Category	Item No.	Components and Parts to be Examined	Examination Methods	Examination Requirements for Fourth Inspection Interval	Examination Technique/Examinatiion Area Comments
PIPING (Stainless Steel or High Alloy)					
C-F-1	C5.10	Welds ≥ 3/8" nominal wall thickness for pipe > NPS 4	See note 1.		
C-F-1	C5.11	Circumferential Weld	Surface and Volumetric	100% of each circumferential weld requiring examination.	The welds will be examined with PT and UT and/or RT.
C-F-1	C5.20	Welds > 1/8" nominal wall thickness for pipe ≥ NPS 2 and ≤ NPS 4	See note 1.		
C-F-1	C5.21	Circumferential Weld	Surface and Volumetric	100% of each circ. weld requiring examination.	
C-F-1	C5.30	Socket Welds	Surface See note 1.	100% of each weld requiring examination.	The welds will be examined with PT.
C-F-1	C5.40	Pipe Branch Connections ≥ NPS 2	See note 1.		
C-F-1	C5.41	Circumferential Weld	Surface	100% of each circumferential weld requiring examination.	The welds will be examined with PT.

R. E. GINNA NUCLEAR POWER PLANT
FOURTH INTERVAL INSERVICE INSPECTION (ISI) PROGRAM
SECTION 4 – CLASS II COMPONENTS
TABLE 2 – Revision 0

Examination Category	Item No.	Components and Parts to be Examined	Examination Methods	Examination Requirements for Fourth Inspection Interval	Examination Technique/Examinatiion Area Comments
PIPING (Carbon or Low Alloy Steel)					
C-F-2	C5.50	Welds ≥ 3/8" nominal wall thickness for pipe > NPS 4			
C-F-2	C5.51	Circumferential Welds	Volumetric and Surface	100% of each weld requiring examination	The welds will be examined with UT and MT/PT.
C-F-2	C5.60	Welds > 1/8" nominal wall thickness for pipe ≥ NPS 2 and ≤ NPS 4			
C-F-2	C5.61	Circumferential Welds	Surface and Volumetric	N/A	No carbon or low alloy steel nonexempt welds in this category at R.E.Ginna.
C-F-2	C5.70	Socket Welds	Surface	N/A	No carbon or low alloy steel nonexempt welds in this category at R.E.Ginna.
C-F-2	C5.80	Pipe Branch Connections ≥ NPS 2			
C-F-2	C5.81	Circumferential Welds	Surface	100% of each circum-ferential weld requiring examination.	The welds will be examined with MT. No longitudinal welds of this item number.

R. E. GINNA NUCLEAR POWER PLANT
FOURTH INTERVAL INSERVICE INSPECTION (ISI) PROGRAM
SECTION 4 – CLASS II COMPONENTS
TABLE 2 – Revision 0

Examination Category	Item No.	Components and Parts to be Examined	Examination Methods	Examination Requirements for Fourth Inspection Interval	Examination Technique/Examinatiion Area Comments
PUMPS					
C-G	C6.10	Pump Casing Welds	Surface	N/A	No pressure retaining pump casing welds
VALVES					
C-G	C6.20	Valve Body Welds	Surface	N/A	No pressure retaining valve body welds
PRESSURE VESSELS					
C-H	C7.10	Pressure Retaining Components	VT-2	All pressure retaining boundaries for vessels to be examined during system pressure test. Exams to be performed in accordance with IWC-5220.	VT examinations will be performed in accordance with IWA-5240.
PIPING					
C-H	C7.30	Pressure Retaining Components	VT-2	All pressure retaining boundaries for vessels to be examined during system pressure test. Exams to be performed in accordance with IWC-5220.	VT-examinations will be performed in accordance with IWA-5240.

R. E. GINNA NUCLEAR POWER PLANT
FOURTH INTERVAL INSERVICE INSPECTION (ISI) PROGRAM
SECTION 4 – CLASS II COMPONENTS
TABLE 2 – Revision 0

Examination Category	Item No.	Components and Parts to be Examined	Examination Methods	Examination Requirements for Fourth Inspection Interval	Examination Technique/Examinatiion Area Comments
PUMPS					
C-H	C7.50	Pressure Retaining Components	VT-2	All pressure retaining boundaries for vessels to be examined during system pressure test. Exams to be performed in accordance with IWC-5220.	VT examinations will be performed in accordance with IWA-5240.
C-H	C7.70	Pressure Retaining Components	VT-2	All pressure retaining boundaries for vessels to be examined during system pressure test. Exams to be performed in accordance with IWC-5220.	VT examinations will be performed in accordance with IWA-5240.

Table 2
NOTES

(1) The welds selected for examination shall include 7.5% but not less than 28 welds, of all austenitic stainless steel or high-alloy welds not exempted by IWC-1220. (Some welds not exempted by this Case are not required to be nondestructively examined per Examination Category C-F-1. These welds, however, shall be included in the total weld count to which the 7.5% sampling rate is applied.) The examinations shall be distributed as follows:

(a) the examination shall be distributed among the class 2 systems prorated, to the degree practicable, on the number of nonexempt austenetic or stainless steel or high alloy welds in each system (i.e., if a system contains 30% of the nonexempt welds, then 30% of the nondestructive examinations required by Examination Category C-F-1 should be performed on that system);

(b) within a system, the examinations will be distributed among terminal ends [see Note 3] and structural discontinuities [see Note 4] prorated, to the degree practicable, on the number of nonexempt terminal ends and structural discontinuities in that system; and

(c) within each system, examinations shall be distributed between line sizes prorated to the degree practicable.

(2) The welds selected for examination shall include 7.5% but not less than 28 welds, of all carbon or low- alloy steel welds not exempted by IWC-1220. (Some welds not exempted by this Case are not required to be nondestructively examined per examination Category C-F-2. These welds, however, shall be included in the total weld count to which the 7.5% sampling rate is applied.) The examinations shall be distributed as follows:

(a) The examination shall be distributed among the class 2 systems prorated, to the degree practicable, on the number of nonexempt carbon or low alloy steel welds in each system (i.e., if a system contains 30% of the nonexempt welds, then 30% of the examinations required by Examination Category C-F-2 should be performed on that system);

(b) Within a system, the examinations will be distributed among terminal ends [see Note 3] and structural discontinuities [see Note 4] prorated, to the degree practicable, on the number of nonexempt terminal ends and structural discontinuities in that system; and

(c) within each system, examinations shall be distributed between line sizes prorated to the degree practicable.

(3) Terminal Ends (TE) are defined in Table 1 Notes, note number 2.

(4) Structural Discontinuities (SD) are defined in Table 1 Notes, note number 2.

(5) Includes nozzles welded to or integrally cast in vessels that connect to piping runs (manways and handholes are excluded).

(6) Includes only those piping runs selected for examination under Examination Category C-F.

(7) In case of multiple vessels of similar design, size and service, the required examinations may be limited to one vessel or distributed among the vessels.

Table 2
NOTES

(8) The welds selected for examination shall be reexamined in the same sequence, during subsequent inspection intervals over the service lifetime of the piping component, to the extent practical.

(9) For circumferential welds with intersecting longitudinal welds, surface examination of the longitudinal piping welds is required for those portions of the welds within the examination boundaries of intersecting circumferential welds.

(10) For circumferential welds with intersecting longitudinal welds, volumetric examination of the longitudinal piping welds is required for those portions of the welds within the examination boundaries of intersecting circumferential welds. The following requirements shall be met:

(a) When longitudinal welds are specified and locations are known, examination requirements shall be met for both transverse and parallel flaws at the intersection of the welds and for that length of longitudinal weld within the circumferential weld examination volume.

(b) When longitudinal welds are specified but locations are unknown, or the existence of longitudinal welds is uncertain, the examination requirements shall be met for both transverse and parallel flaws within the entire examination volume of intersecting circumferential welds.

(11) Only those welds showing reportable preservice transverse indications need to be examined by the ultasonic method for reflectors transverse to the weld length direction, except that circumferential welds with intersecting longitudinal weld shall meet note (7) of Examination Category C-F-2 in Table IWC-2500-1.

The following welds are identified in Supplement 1 to Appendix B, the Program Plan.

*TE-A Terminal End at a Piping Anchor
*TE-B Terminal End at a Branch Connection
*TE-P Terminal End at a Pump Connection
*TE-V Terminal End at a Vessel Connection
*SD Structural Discontinuity
*PP Pipe to Pipe Butt Weld
*SEAM Longitudinal Seam Weld

.....

Note: When more than one weld type is applicable, the more restrictive (i.e. TE) is utilized.

R. E. GINNA NUCLEAR POWER PLANT
FOURTH INTERVAL INSERVICE INSPECTION (ISI) PROGRAM
SECTION 4 – CLASS III COMPONENTS
TABLE 3 – Revision 0

Examination Category	Item No.	Components and Parts to be Examined	Examination Methods	Examination Requirements for Fourth Inspection Interval	Examination Technique/Examination Area Comments
PRESSURE VESSELS					
D-A	D1.10	Integrally Welded Attachments	Visual VT-3	All required attachments to be examined.See Code note # 2 & 3	The Integral Attachments will be examined by VT-3 method.
PIPING					
D-A	D1.20	Integrally Welded Attachments	Visual VT-3	10 % Sample. See Code note # 2 & 3	The integral attachments will be examined by VT-3 method.
PUMPS					
D-A	D1.30	Integrally Welded Attachments	Visual VT-3	N/A	No Integral Attachments on Pumps at R.E.Ginna.
VALVES					
D-A	D1.40	Integrally Welded Attachments	Visual VT-3	N/A	No Integral Attachments on valves at R.E.Ginna.
PRESSURE VESSELS					
D-B	D2.10	Pressure Retaining Components	Visual VT-2	System Leakage Test to be performed each inspection interval.	VT-2 examination will be performed.
D-B	D2.20	Pressure Retaining Components	Visual VT-2	System Leakage Test to be performed per CC N-498-1.	VT-2 examination will be performed.

R. E. GINNA NUCLEAR POWER PLANT
FOURTH INTERVAL INSERVICE INSPECTION (ISI) PROGRAM
SECTION 4 – CLASS III COMPONENTS
TABLE 3 – Revision 0

Examination Category	Item No.	Components and Parts to be Examined	Examination Methods	Examination Requirements for Fourth Inspection Interval	Examination Technique/Examination Area Comments
PIPING					
D-B	D2.30	Pressure Retaining Components	Visual VT-2	System Leakage Test to be performed each inspection interval.	VT-2 examination will be performed.
D-B	D2.40	Pressure Retaining Components	Visual VT-2	System Leakage Test to be performed per CC N-498-1.	The integral attachments will be examined by VT-2 method.
PUMPS					
D-B	D2.50	Pressure Retaining Components	Visual VT-2	System Leakage Test to be performed each inspection interval.	VT examinations will be performed in accordance with IWA-5240.
D-B	D2.60	Pressure Retaining Components	Visual VT-2	System Leakage Test to be performed per CC N-498-1.	The integral attachments shall be examined by VT-2 method.
VALVES					
D-B	D2.70	Pressure Retaining Components	Visual VT-2	System Leakage Test to be performed each inspection interval.	VT examinations will be performed in accordance with IWA-5240.

R. E. GINNA NUCLEAR POWER PLANT
FOURTH INTERVAL INSERVICE INSPECTION (ISI) PROGRAM
SECTION 4 – CLASS III COMPONENTS
TABLE 3 – Revision 0

Examination Category	Item No.	Components and Parts to be Examined	Examination Methods	Examination Requirements for Fourth Inspection Interval	Examination Technique/Examination Area Comments
VALVES					
D-B	D2.80	Pressure Retaining Components	Visual VT-2	System Leakage Test to be performed per CC N-498-1.	The integral attachments will be examined by VT-2 method.

R. E. GINNA NUCLEAR POWER PLANT
FOURTH INTERVAL INSERVICE INSPECTION (ISI) PROGRAM
SECTION 4 – CLASS 1, 2, and 3 IWF COMPONENT SUPPORTS
TABLE 4 – Revision 0

Examination Category	Item No.	Components and Parts to be Examined	Examination Methods	Examination Requirements for Fourth Inspection Interval	Examination Technique/Examination Area Comments
F-A	F1.10*	Class 1 Piping Supports	VT-3	25% of Class 1 Supports	Functional testing of Snubber type support components shall be performed in accordance with Technical Specifications and in accordance with requirements of the Snubber Program as defined within Section 9.
F-A	F1.20*	Class 2 Piping Supports	VT-3	15% of Class 2 Supports	
F-A	F1.30*	Class 3 Piping Supports Class 1, 2, 3 and MC	VT-3	10% of Class 3 Supports	
F-A	F1.40	Supports other than piping supports. See note 1.	VT-3	100% except for multiple components. See note 2.	

NOTES

(1) No Class MC Structural Containment Supports in PWR plants.

(2) For multiple components other than piping, within a system of similar design, function, and service, the supports of only one of the multiple components are required to be examined.

* Item numbers shall be categorized to identify support types by the following:
A = Supports such as one direction Rod Hangers
B = Supports such as multidirectional Restraints
C = Supports that allow thermal movement, such as springs

R. E. GINNA NUCLEAR POWER PLANT
FIRST INTERVAL INSERVICE INSPECTION (ISI) PROGRAM
SECTION 4 – CLASS MC
TABLE 5 – Revision 0

Examination Category	Item No.	Components and Parts to be Examined	Examination Methods	Examination Requirements for FIRST Inspection Interval	Examination Technique/Examination Area Comments
CONTAINMENT SURFACES					
E-A	E1.11	Accessible Surface Areas	General Visual	100 % once per period and prior to an App. J, Type A ILRT.	Perform Visual on accessible Class MC surfaces including 1/2" on structural attachments beyond Class MC boundary.
E-A	E1.12	Accessible Surface Areas	Visual VT-3	100 % in 3rd period only.	Perform Visual on accessible Class MC surfaces including 1/2" on structural attachments beyond Class MC boundary.
AUGMENTED EXAMINATION					
E-C	E4.11	Augmented Examination Areas, (Areas meeting the criteria of IWE-1240 and IWE-2500(c)).	Visual VT-1	100 % cumulative per period.	A VT-1 will be performed on interior and exterior containment surfaces as specified in IWE-1241.
E-C	E4.12	Augmented Examination Areas, (Areas meeting the criteria of IWE-1240 and IWE-2500(c)).	Volumetric	100 % cumulative per period.	A VT-1 will be performed on interior and exterior containment surfaces as specified in IWE-1241.
PAINT AND COATING					
E-PC	PC-1	Paint or Coating prior to removal. See note 2.	Visual	Examination of paint and coating per IWE-2500(b).	A Visual examination will be performed prior to removal of any paint or coating.
E-PC	PC-2	Applied paint or coating. See note 2.	Visual	Preservice examination required per IWE-2500(g)	A Visual examination will be performed following application of paint or coating.

R. E. GINNA NUCLEAR POWER PLANT
FIRST INTERVAL INSERVICE INSPECTION (ISI) PROGRAM
SECTION 4 – CLASS MC
TABLE 5 – Revision 0

Examination Category	Item No.	Components and Parts to be Examined	Examination Methods	Examination Requirements for FIRST Inspection Interval	Examination Technique/Examination Area Comments
MOISTURE BARRIERS					
E-D	E5.30	Moisture Barriers	Visual VT-3	16% to 34% 1st period, 50% to 67% cumulative 2nd period, 100% cumulative 3rd period.	A VT-3 examination will be performed on all moisture barriers intended to prevent intrusion of moisture against the metal liner.
PRESSURE RETAINING BOLTING					
E-G	E8.10	Surfaces exposed by disassembly See note 3.	Visual VT-1	16% to 34% 1st period, 50% to 67% cumulative 2nd period, 100% cumulative 3rd period.	A VT-1 examination will be performed on exposed surfaces. See note 4.
PRESSURE TESTS					
E-P	E9.10	Pressure Retaining Boundry of Repairs, Replacements, and Modifications.	Appendix J	Each Repair, Replacement, and Modification.	Examination may be deferred to next scheduled leakage test if allowed by IWE-5222.
E-P	E9.20	Containment Penetration Bellows	Appendix J	See note 1.	
E-P	E9.30	Airlocks	Appendix J	See note 1.	
E-P	E9.40	Seals and Gaskets	Appendix J	See note 1.	

Table 5
NOTES

(1) Examination category E-P requirements correspond with the Containment Leakage Rate Testing Program and applicable implementing procedures.

(2) This requirement applies regardless of whether a Repair, Replacement, or Modification of the underlying metallic component is performed. The paint or coating work itself is not a Repair, Replacement, or Modification.

(3) Surfaces exposed by disassembly for other purposes plus sufficient assembled connections to meet examination percentage.

(4) Disassembly solely for examination is not required. If sufficient bolted connections to meet the examination percentages are not disassembled for other purposes, visible surfaces of additional, assembled bolted connections will be examined.

R. E. GINNA NUCLEAR POWER PLANT
FIRST INTERVAL INSERVICE INSPECTION (ISI) PROGRAM
SECTION 4 – CLASS CC COMPONENTS
TABLE 6 – Revision 0

Examination Category	Item No.	Components and Parts to be Examined	Examination Methods	Examination Requirements for FIRST Inspection Interval (1)	Examination Technique/Examination Area Comments
CONTAINMENT SURFACES					
L-A	L1.11	Accessible surface areas	VT-3C	100 % to be examined in the 1st 5 years.	A VT-3 examination will be performed in accordance with IWL-2310(b).
L-A	L1.12	Areas from L1.11 with suspect conditions	VT-1C	Selected areas that indicate suspect conditions	A VT-1 examination will be performed in accordance with IWL-2310(a).
TENDONS (FORCE MEASUREMENT AND WIRE SAMPLES)					
L-B	L2.10	Tendon	Force Measurement	Tendon samples selected per IWL-2521.	Tendon Force Measurement shall be performed in accordance with IWL-2522.
L-B	L2.20	Wire or Strand	Metallurgical examination and testing	Wire and Strand samples selected per IWL-2523.	Strand wires shall be examined for wedge slippage marks. Examine full length.
TENDONS (OTHER REQUIREMENTS)					
L-B	L2.30	Anchorage Hardware and Surrounding Concrete	VT-1 VT-1C	Examinations per the requirements of IWL-2524.	Examinations will be performed in accordance with IWA-2211.
L-B	L2.40	Corrosion Protection Medium	Chemical Analysis	Examinations per the requirements of IWL-2525.1(a).	Chemical Analysis of tendon grease from each tendon peformed in accordance with IWL-2525.2(a).
L-B	L2.50	Free Water	pH Analysis	Examinations per the requirements of IWL-2525.1(b).	Samples of free water shall be taken where present in quantities sufficient for a laboratory pH analysis.

R. E. GINNA NUCLEAR POWER PLANT
FIRST INTERVAL INSERVICE INSPECTION (ISI) PROGRAM
SECTION 4 – CLASS CC COMPONENTS
TABLE 6 – Revision 0

Examination Category	Item No.	Components and Parts to be Examined	Examination Methods	Examination Requirements for FIRST Inspection Interval (1)	Examination Technique/Examination Area Comments
GREASE CAPS					
L-GC	GC-1	Grease Caps	Visual	Requirement of 10CFR 50.55a(b)(2)(ix)(A)	A Visual examination will be performed on all grease caps.

(1) Subsection IWL utilizes five year intervals and no periods.

1.0 General

A Line List was developed utilizing ASME Section XI rules and criteria to identify all Class 1, 2 & 3 exempt and non-exempt items. The attached Line List (Table 1) identifies non-exempt piping lines and components, type of nondestructive examination requirements as well as providing a line description. It does not identify ASME Class MC and CC Components. Class MC and CC will be identified in the Program Plan. Visual examination for leakage (VT-2) boundaries are not addressed in this Section, but shall be administratively confirmed and defined on P&ID's prior to implementation.

The line list is grouped by P&ID Drawing Number, Class, System, and Component Type. This information appears on each page of the Line List on the upper left hand corner. The Component Type description defines the information as either components or piping.

On the individual pages, unique line numbers were identified that correspond to a description of a particular segment. Other relative information listed within each page of the line list includes ISI Figure Numbers, material type, pipe size, wall thickness, applicable code exemption basis, typical examination (NDE) methods, applicable operating pressure and temperature, as well as component insulation information. The revision status of "R" indicates that a change has occurred anywhere horizontally for the line number in question.

A visual representation of the line list can be seen on the corresponding color coded P&IDs contained within Section 3. Lines 1" and under are not shown but are identified within the line list data base.

Attachment	Revision	Pages
Table 1	0	107

PID No.: 33013-1231
Class: 2
System: MAIN STEAM
Comp Type: COMPONENTS

ISI Line #	Gilbert Ln. #	SWR Line	Fig. #	Matrl.	IN?	Size	TK(in.)	Method	ASME Exemption	Po	Temp.	Line Description/Remarks	Revise	Status
EMS01A			B-1		-	30	0	SUR/VOL	N/A	715	505	STEAM GENERATOR A.	R 12/93	A
EMS01B			B-1		-	30	0	SUR/VOL	N/A	715	505	STEAM GENERATOR B.	R 12/93	A

PID No.: 33013-1231
Class: 2
System: MAIN STEAM
Comp Type: PIPING

ISI Line #	Gilbert Ln. #	SWR Line	Fig. #	Matrl.	IN?	Size	TK(in.)	Method	ASME Exemption	Po	Temp.	Line Description/Remarks	Revise	Status
1.5A-MS-600-1A	MS-300	MS-1000	B-9	A106	Y	1.5	0.145		IWC-1222(A)	715	505	30" MS PIPE TO VALVE 3455.		A
1.5A-MS-600-1B	MS-300	SMS-1001	B-10	A106	Y	1.5	0.145		IWC-1222(A)	715	505	6A-MS-600-1B TO VALVE 3504C.		A
1.5B-MS-600-1A	MS-300	MS-1000	B-9A	A106	Y	1.5	0.147		IWC-1222(A)	715	505	6A-MS-600-1A TO VALVE 3505C.	R 11/91	A
1.5B-MS-600-1B			B-8			1.5	0		IWC-1222(A)			30" MS PIPE TO VALVE 3500.	R 06/93	A
1.5C-MS-600-1A			B-8			1.5	0		IWC-1222(A)			30" MS PIPE TO VALVE 3503.	R 06/93	A
2A-MS-600-1A			B-9A			2	0		IWC-1222(A)			6G-MS-600-1A TO VALVE 3521.	A 11/91	A
2A-MS-600-1B			B-10			2	0		IWC-1222(A)			6G-MS-600-1B TO VALVE 3520.	A 11/91	A
30A-MS-600-1A	MS-100	MS-1000	B-8	A115	Y	30	1.25	SUR/VOL	N/A	715	505	S/G 1A TO VALVE 3517.		A
30B-MS-600-1B	MS-200	SMS-1001	B-8	A115	Y	30	1.25	SUR/VOL	N/A	715	505	S/G 1B TO VALVE 3516.		A
3A-MS-600-1A	MS-300	MS-1000	B-9A	A106	Y	3	0.3		IWC-1222(A)	715	505	30" MS PIPE TO VALVE 3615 (3517 BYPASS).	R 11/91	A
3A-MS-600-1B	MS-300	SMS-1001	B-10	A106	Y	3	0.3		IWC-1222(A)	715	505	30" MS PIPE TO VALVE 3614 (3516 BYPASS).	R 11/91	A
6A-MS-600-1A	MS-100	MS-1000	B-9A	A106	Y	6	0.432	SUR/VOL	N/A	715	505	30" MS PIPE TO VALVE 3505A.	R 11/91	A
6A-MS-600-1B	MS-300	SMS-1001	B-10	A106	Y	6	0.432	SUR/VOL	N/A	715	505	30" MS PIPE TO VALVE 3504A.		A
6B-MS-600-1A	MS-300	MS-1000	B-9A	A106	Y	6	0.432	SUR/VOL	N/A	715	505	30" MS PIPE TO VALVE 3411.	R 11/91	A
6B-MS-600-1B	MS-120	SMS-1001	B-10	A106	Y	6	0.432	SUR/VOL	N/A	715	505	30" MS-PIPE TO VALVE 3410.		A
6C-MS-600-1A	MS-300	MS-1000	B-9A	A106	Y	6	0.432	SUR/VOL	N/A	715	505	30" MS PIPE TO VALVE 3509.	R 11/91	A
6C-MS-600-1B	MS-300	SMS-1001	B-10	A106	Y	6	0.432	SUR/VOL	N/A	715	505	30" MS PIPE TO VALVE 3508.		A
6D-MS-600-1A	MS-300	MS-1000	B-9A	A106	Y	6	0.432	SUR/VOL	N/A	715	505	30" MS PIPE TO VALVE 3511.	R 11/91	A
6D-MS-600-1B	MS-300	SMS-1001	B-10	A106	Y	6	0.432	SUR/VOL	N/A	715	505	30" MS PIPE TO VALVE 3510.		A
6E-MS-600-1A	MS-300	MS-1000	B-9A	A106	Y	6	0.432	SUR/VOL	N/A	715	505	30" MS PIPE TO VALVE 3513.	R 11/91	A
6E-MS-600-1B	MS-300	SMS-1001	B-10	A106	Y	6	0.432	SUR/VOL	N/A	715	505	30" MS PIPE TO VALVE 3512.		A
6F-MS-600-1A	MS-300	MS-1000	B-9A	A106	Y	6	0.432	SUR/VOL	N/A	715	505	30" MS PIPE TO VALVE 3515.	R 11/91	A

PID No.: 33013-1231
Class: 2
System: MAIN STEAM
Comp Type: PIPING

ISI Line #	Gilbert Ln. #	SWR Line	Fig. #	Matrl.	IN?	Size	TK(in.)	Method	ASME Exemption	Po	Temp.	Line Description/Remarks	Revise	Status
6F-MS-600-1B	MS-300	SMS-1001	B-10	A106	Y	6	0.432	SUR/VOL	N/A	715	505	30" MS PIPE TO VALVE 3514.		A
6G-MS-600-1A	MS-300	MS-1000	B-9A	A106	Y	6	0.432	SUR/VOL	N/A	715	505	30" MS PIPE TO 6X2 REDUCER.	R 11/91	A
6G-MS-600-1B	MS-300	SMS-1001	B-10	A106	Y	6	0.432	SUR/VOL	N/A	715	505	30" MS PIPE TO 6X2 REDUCER.	R 11/91	A

PID No.: 33013-1231
Class: 3
System: MAIN STEAM
Comp Type: PIPING

ISI Line #	Gilbert Ln. #	SWR Line	Fig. #	Matrl.	IN?	Size	TK(in.)	Method	ASME Exemption	Po	Temp.	Line Description/Remarks	Revise	Status
1.5A-MS-600-1	MS-120		C-32	A106	Y	1.5	0.145		IWD-1220(A1)	108	508	3505C TO 6A.	R 05/98	A
1.5B-MS-600-1	MS-120		C-32	A106	Y	1.5	0.145		IWD-1220(A1)	108	508	3504C TO 6B.	R 05/98	A
1.5C-MS-600-1			B-9A	A115	Y	1.5	0.145		IWD-1220(A1)	715	505	30A-MS-600-1 TO VALVE 8527.	R 05/98	A
1.5D-MS-600-1			B-10	A115	Y	1.5	0.145		IWD-1220(A1)	715	505	30B-MS-600-1 TO VALVE 8528.	R 05/98	A
30A-MS-600-1			B-9A	A115	Y	30	1.25	VT-3	NO IWA	715	505	VALVE 3517 TO REDUCER AT VALVE 3519.	A 06/93	A
30B-MS-600-1			B-10	A115	Y	30	1.25	VT-3	NO IWA	715	505	VALVE 3516 TO REDUCER AT VALVE 3518.	A 06/93	A
3A-MS-600-1	MS-120		C-32	A106	Y	3	0.216		IWD-1220(A1)	108	508	6C TO AUX FW PUMP TURBINE.	R 05/98	A
3B-MS-600-1			B-9A	A115	Y	3	0.216		IWD-1220(A1)	715	505	VALVE 3615 TO 30A-MS-600-1.	R 05/98	A
3C-MS-600-1			B-10	A115	Y	3	0.216		IWD-1220(A1)	715	505	VALVE 3614 TO 30B-MS-600-1.	R 05/98	A
4A-MV-150-1			N/A			4	0		IWD-1220(A1)			AUX FW PUMP TURBINE QUENCH TANK TO 8A.	R 05/98	A
6A-MS-600-1	MS-120		C-32	A106	Y	6	0.432	VT-3	N/A	108	508	3505A TO 3505B.		A
6B-MS-600-1	MS-120		C-32	A106	Y	6	0.432	VT-3	N/A	108	508	3504A TO 3504B.		A
6C-MS-600-1	MS-120		C-32	A106	Y	6	0.432	VT-3	N/A	108	508	6A & 6B TO 3A.	R 11/91	A
8A-MV-150-1			N/A			8	0	VT-3	NO IWA			AFW PUMP TURBINE EXH TO ATMOS.	A 11/91	A

PID No.: 33013-1231
Class: HE-2
System: MAIN STEAM
Comp Type: HE-PIPING:APP-B

ISI Line #	Gilbert Ln. #	SWR Line	Fig. #	Matrl.	IN?	Size	TK(in.)	Method	ASME Exemption	Po	Temp.	Line Description/Remarks	Revise	Status
30A-MS-600-1A	MS-100	MS-1000	HE-1	A115	Y	30	1.25	SUR/VOL	N/A	715	505	S/G 1A TO VALVE 3517.	R 06/93	A
30B-MS-600-1B	MS-200	SMS-1001	HE-2A	A115	Y	30	1.25	SUR/VOL	N/A	715	505	S/G 1B TO VALVE 3516.	R 06/93	A
6A-MS-600-1A	MS-100	MS-1000	HE-1A	A106	Y	6	0.432	SUR/VOL	N/A	715	505	30" MS PIPE TO VALVE 3505A.	R 06/93	A
6A-MS-600-1B	MS-300	SMS-1001	HE-2	A106	Y	6	0.432	SUR/VOL	N/A	715	505	30" MS PIPE TO VALVE 3504A.	R 06/93	A
6B-MS-600-1A	MS-300	MS-1000	HE-1A	A106	Y	6	0.432	SUR/VOL	N/A	715	505	30" MS PIPE TO VALVE 3411.	R 06/93	A
6B-MS-600-1B	MS-200	SMS-1001	HE-2	A106	Y	6	0.432	SUR/VOL	N/A	715	505	30" MS PIPE TO VALVE 3410.	R 06/93	A
6C-MS-600-1A	MS-300	MS-1000	HE-1A	A106	Y	6	0.432	SUR/VOL	N/A	715	505	30" MS PIPE TO VALVE 3509.	R 06/93	A
6C-MS-600-1B	MS-300	SMS-1001	HE-2	A106	Y	6	0.432	SUR/VOL	N/A	715	505	30" MS PIPE TO VALVE 3508.	R 06/93	A
6D-MS-600-1A	MS-300	MS-1000	HE-1A	A106	Y	6	0.432	SUR/VOL	N/A	715	505	30" MS PIPE TO VALVE 3511.	R 06/93	A
6D-MS-600-1B	MS-300	SMS-1001	HE-2	A106	Y	6	0.432	SUR/VOL	N/A	715	505	30" MS PIPE TO VALVE 3510.	R 06/93	A
6E-MS-600-1A	MS-300	MS-1000	HE-1A	A106	Y	6	0.432	SUR/VOL	N/A	715	505	30" MS PIPE TO VALVE 3513.	R 06/93	A
6E-MS-600-1B	MS-300	SMS-1001	HE-2	A106	Y	6	0.432	SUR/VOL	N/A	715	505	30" MS PIPE TO VALVE 3512.	R 06/93	A
6F-MS-600-1A	MS-300	MS-1000	HE-1A	A106	Y	6	0.432	SUR/VOL	N/A	715	505	30" MS PIPE TO VALVE 3515.	R 06/93	A
6F-MS-600-1B	MS-300	SMS-1001	HE-2	A106	Y	6	0.432	SUR/VOL	N/A	715	505	30" MS PIPE TO VALVE 3514.	R 06/93	A
6G-MS-600-1A			HE-1A	A106	Y	6	0.432	SUR/VOL	N/A	715	505	30" MS PIPE TO VALVE 3521.	R 06/93	A
6G-MS-600-1B	MS-300	SMS-1001	HE-2	A106	Y	6	0.432	SUR/VOL	N/A	715	505	30" MS PIPE TO VALVE 3520.	R 06/93	A

PID No.: 33013-1231
Class: HE-3
System: MAIN STEAM
Comp Type: HE-PIPING:APP-B

ISI Line #	Gilbert Ln. #	SWR Line	Fig. #	Matrl.	IN?	Size	TK(in.)	Method	ASME Exemption	Po	Temp.	Line Description/Remarks	Revise	Status
30A-MS-600-1			HE-1A	A115	Y	30	1.25	SUR/VOL	N/A	715	505	VALVE 3517 TO REDUCER AT VALVE 3519.	A 06/93	A
30B-MS-600-1			HE-2	A115	Y	30	1.25	SUR/VOL	N/A	715	505	VALVE 3516 TO REDUCER AT VALVE 3518.	A 06/93	A

PID No.: 33013-1232
Class: HE-Q
System: MAIN STEAM
Comp Type: HE-PIPING:APP-B

ISI Line #	Gilbert Ln. #	SWR Line	Fig. #	Matrl.	IN?	Size	TK(in.)	Method	ASME Exemption	Po	Temp.	Line Description/Remarks	Revise	Status
12A-MS-600-1A			HE-7			12	0	SUR/VOL	N/A			36" MS PIPE TO VALVE 3532.	A 11/91	A
12A-MS-600-1B			HE-7			12	0	SUR/VOL	N/A			36" MS PIPE TO VALVE 3533.	A 11/91	A
24A-MS-600-1A		MS-1002	HE-7A		Y	24	0	SUR/VOL	N/A	715	505	36" MS PIPE TO VALVE 3544.	R 11/91	A
24B-MS-600-1A		MS-1003	HE-7A		Y	24	0	SUR/VOL	N/A	715	505	36" MS PIPE TO VALVE 3545.	R 11/91	A
36-MS-600-1		MS-1000	HE-7			36	0	SUR/VOL	N/A			30" X 36" REDUCERS TO END CAP.	R 06/93	A

PID No.: 33013-1236-1
Class: HE-Q
System: FEEDWATER
Comp Type: HE-PIPING:APP-B

ISI Line #	Gilbert Ln. #	SWR Line	Fig. #	Matrl.	IN?	Size	TK(in.)	Method	ASME Exemption	Po	Temp.	Line Description/Remarks	Revise	Status
20-FW-900-1		FW-1001	HE-6		Y	20	0	SUR/VOL	N/A	715	505	TEE AT 3984 & 3985 TO TEE AT 3982 & 3983	R 06/93	A
8-FW-900-1		FW-1081	HE-6		Y	8	0	SUR/VOL	N/A	715	505	20-FW-900-1 TO VALVE 9507D.	R 06/93	A

PID No.: 33013-1236-2
Class: 2
System: FEEDWATER
Comp Type: COMPONENTS

ISI Line #	Gilbert Ln. #	SWR Line	Fig. #	Matrl.	IN?	Size	TK(in.)	Method	ASME Exemption	Po	Temp.	Line Description/Remarks	Revise	Status
EMS01A			B-1			18	0	SUR/VOL	N/A	715	505	STEAM GENERATOR A.	R 12/93	A
EMS01B			B-1			18	0	SUR/VOL	N/A	715	505	STEAM GENERATOR B.	R 12/93	A

PID No.: 33013-1236-2
Class: 2
System: FEEDWATER
Comp Type: PIPING

ISI Line #	Gilbert Ln. #	SWR Line	Fig. #	Matrl.	IN?	Size	TK(in.)	Method	ASME Exemption	Po	Temp.	Line Description/Remarks	Revise	Status
14A-FW-900-1A	FW-100	FW-1001	B-11	A106	Y	14	0.938	SUR/VOL	N/A	715	505	18X14 REDUCER TO VALVE 3993.	R 06/93	A
14B-FW-900-1B	FW-200	FW-1005	B-13	A106	Y	14	0.938	SUR/VOL	N/A	715	505	18X14 REDUCER TO VALVE 3992.	R 06/93	A
18A-FW-900-1A			B-12			18	0	SUR/VOL	N/A			S/G-A TO 18X14 REDUCER.	R 06/93	A
18B-FW-900-1B			B-13			18	0	SUR/VOL	N/A			S/G-B TO 18X14 REDUCER.	R 06/93	A

PID No.: 33013-1236-2
Class: HE-2
System: FEEDWATER
Comp Type: HE-PIPING:APP-B

ISI Line #	Gilbert Ln. #	SWR Line	Fig. #	Matrl.	IN?	Size	TK(in.)	Method	ASME Exemption	Po	Temp.	Line Description/Remarks	Revise	Status
14A-FW-900-1A	FW-100	FW-1001	HE-3	A106	Y	14	0.938	SUR/VOL	N/A	715	505	18 X 14 REDUCER TO VALVE 3993.	R 06/93	A
14B-FW-900-1B	FW-200	FW-1005	HE-4	A106	Y	14	0.938	SUR/VOL	N/A	715	505	18 X 14 REDUCER TO VALVE 3992.	R 06/93	A

PID No.: 33013-1236-2
Class: HE-Q
System: FEEDWATER
Comp Type: HE-PIPING:APP-B

ISI Line #	Gilbert Ln. #	SWR Line	Fig. #	Matrl.	IN?	Size	TK(in.)	Method	ASME Exemption	Po	Temp.	Line Description/Remarks	Revise	Status
14A-FW-900-1			HE-3	A106	Y	14	0.938	SUR/VOL	N/A	715	505	VALVE 3993 TO 20-FW-900-1.	A 06/93	A
14B-FW-900-1			HE-4	A106	Y	14	0.938	SUR/VOL	N/A	715	505	VALVE 3992 TO 20-FW-900-1.	A 06/93	A

PID No.: 33013-1237
Class: 2
System: AUXILIARY FEEDWATER
Comp Type: PIPING

ISI Line #	Gilbert Ln. #	SWR Line	Fig. #	Matrl.	IN?	Size	TK(in.)	Method	ASME Exemption	Po	Temp.	Line Description/Remarks	Revise	Status
3A-FW-900-1A	AFW-500	FW-1001	C-1A	A106	Y	3	0.3		IWC-1222(A)	715	505	4000C TO 4011, 14A-FW-900-1A.	R 06/93	A
3A-FW-900-1B	AFW-400	FW-1005	C-1C	A106	Y	3	0.3		IWC-1222(A)	715	505	4000D TO 4012, 14B-FW-900-1B.	R 06/93	A
3B-FW-900-1A	AFW-500	FW-1001	C-1A	A106	Y	3	0.3		IWC-1222(A)	715	505	4003 TO 4005, 14A-FW-900-1A.	R 06/93	A
3B-FW-900-1B	AFW-400	FW-1005	C-1B	A106	Y	3	0.3		IWC-1222(A)	715	505	4004 TO 4006, 14B-FW-900-1B.	R 06/93	A

PID No.: 33013-1237
Class: 3
System: AUXILIARY FEEDWATER
Comp Type: COMPONENTS

ISI Line #	Gilbert Ln. #	SWR Line	Fig. #	Matrl.	IN?	Size	TK(in.)	Method	ASME Exemption	Po	Temp.	Line Description/Remarks	Revise	Status
EAF01			N/A			1	0		IWD-1220(A2)	75	80	TURBIN DRIVEN AFW PUMP LUBE OIL COOLER.	R 05/98	A
EAF02A			N/A			1	0		IWD-1220(A2)	75	80	AFW PUMP A LUBE OIL COOLER.	R 05/98	A
EAF02B			N/A			1	0		IWD-1220(A2)	75	80	AFW PUMP B LUBE OIL COOLER.	R 05/98	A
PAF01A			N/A			3	0	VT-3	NO IWA	125	100	AUXILIARY FEEDWATER PUMP A.	R 12/93	A
PAF01B			N/A			3	0	VT-3	NO IWA	125	100	AUXILIARY FEEDWATER PUMP B.	R 12/93	A
PAF03			N/A			4	0	VT-3	NO IWA	125	100	TURBINE DRIVEN AFW PUMP.	R 12/93	A

PID No.: 33013-1237
Class: 3
System: AUXILIARY FEEDWATER
Comp Type: PIPING

ISI Line #	Gilbert Ln. #	SWR Line	Fig. #	Matrl.	IN?	Size	TK(in.)	Method	ASME Exemption	Po	Temp.	Line Description/Remarks	Revise	Status
1.5A-FW7-900-1			C-1		?	1.5	0.145	VT-3	NO IWA			5A-FW7-900-1 TO 4023, 4291, LFW30.	A 11/91	A
1.5A-FW7-900-1A			C-1G		?	1.5	0.145	VT-3	NO SUPPORTS			2B-FW7-900-1A TO 4480, 2C-FW7-900-1A.	A 11/91	A
1.5A-FW7-900-1B			C-1H		?	1.5	0.145	VT-3	NO SUPPORTS			2B-FW7-900-1B TO 4481, 2C-FW7-900-1B.	A 11/91	A
2A-FW7-900-1A	AFW-100		C-1G	A106	?	2	0.145	VT-3	N/A	125	100	3A-FW7-900-1A TO 1A-FW7-900-1A.	R 11/91	A
2A-FW7-900-1B	AFW-100		C-1H	A106	?	2	0.154	VT-3	N/A	125	100	3A-FW7-900-1B TO 4310.	R 11/91	A
2B-FW7-900-1A	AFW-100		C-1G	A106	?	2	0.145	VT-3	N/A	125	100	2A-FW7-900-1A TO 4482, 1.5A-FW7-900-1A.	R 11/91	A
2B-FW7-900-1B			C-1H		?	2	0.145	VT-3	N/A	125	100	2A-FW7-900-1B TO 4484, 1.5A-FW7-900-1B.	R 11/91	A
2C-FW7-900-1A			C-1G		?	2	0.145	VT-3	N/A			1.5A-FW7-900-1A TO 4483, 3A-FW7-900-1A.	A 11/91	A
2C-FW7-900-1B			C-1H		?	2	0.145	VT-3	N/A			1.5A-FW7-900-1B TO 4485, 3A-FW7-900-1B.	A 11/91	A
2D-FW7-900-1A			C-1A		?	2	0.145	VT-3	NO SUPPORTS	125	100	AFW PUMP A DISCHG TO 3A-FW7-900-1A.	A 11/91	A
2D-FW7-900-1B			C-1F		?	2	0.145	VT-3	NO SUPPORTS	125	100	AFW PUMP B DISCHG TO 3A-FW7-900-1B.	A 11/91	A
3A-CD-150-1A			C-33	A53	?	3	0	VT-3	NO SUPPORTS	12	80	4A-CD-150-1A TO AFW PUMP A SUCTION.	A 06/93	A
3A-CD-150-1B			C-33	A53	?	3	0	VT-3	NO SUPPORTS	12	80	4A-CD-150-1B TO AFW PUMP B SUCTION.	A 06/93	A
3A-FW7-900-1A	AFW-100,500		C-1A	A106	?	3	0.3	VT-3	N/A	125	100	2D-FW7-900-1A TO VALVE 4000C.	R 11/91	A
3A-FW7-900-1B	AFW-100,400		C-1F	A106	?	3	0.3	VT-3	N/A	125	100	2D-FW7-900-1B TO VALVE 4000D.	R 11/91	A
3B-FW7-900-1			C-1D	A106	?	3	0.3	VT-3	NO SUPPORTS	125	100	3A-FW7-900-1A TO 4357.	A 11/91	A
3C-FW7-900-1	AFW-100		C-1E	A106	?	3	0.3	VT-3	NO SUPPORTS	125	100	3A-FW7-900-1B TO 4356.	R 11/91	A
3D-FW7-900-1			C-1E		?	3	0.438	VT-3	N/A	125	100	BYPASS FROM 4357 TO 4356 THRU 4000A.	A 11/91	A
3E-FW7-900-1	AFW-100		C-1D	A106	?	3	0.438	VT-3	N/A	125	100	3K-FW7-900-1 TO 4360,4359,5A-FW7-900-1.	R 11/91	A
3F-FW7-900-1	AFW-200		C-1	A106	?	3	0.3	VT-3	N/A	125	100	5A-FW7-900-1 TO 4001, 5B-FW7-900-1.	R 11/91	A
3G-FW7-900-1	AFW-200,500		C-1A	A106	?	3	0.3	VT-3	N/A	125	100	5B-FW7-900-1 TO 4003.	R 11/91	A
3H-FW7-900-1	AFW-200		C-1	A106	?	3	0.3	VT-3	N/A	125	100	5A-FW7-900-1 TO 4000,4002,5C-FW7-900-1.	R 11/91	A

PID No.: 33013-1237
Class: 3
System: AUXILIARY FEEDWATER
Comp Type: PIPING

ISI Line #	Gilbert Ln. #	SWR Line	Fig. #	Matrl.	IN?	Size	TK(in.)	Method	ASME Exemption	Po	Temp.	Line Description/Remarks	Revise	Status
3I-FW7-900-1			C-1		?	3	0.3	VT-3	NO SUPPORTS			TURB AFW PUMP DISCHG TO 5A-FW7-900-1.	A 11/91	A
3J-FW7-900-1	AFW-200		C-1B	A106	?	3	0.438	VT-3	N/A	125	100	5C-FW7-900-1 TO 4004.	R 11/91	A
3K-FW7-900-1	AFW-100		C-1E		?	3	0.438	VT-3	N/A	125	100	BYPASS FROM 4357 TO 4356 THRU 4000B.	R 11/91	A
4A-CD-150-1A	SW-1520		C-33	A53	?	4	0.237	VT-3	NO SUPPORTS	12	80	VALVE 4017 TO 4345.	R 06/93	A
4A-CD-150-1B	SW-1520		C-33	A53	?	4	0.237	VT-3	NO SUPPORTS	12	80	VALVE 4016 TO 4344.	R 06/93	A
4A-CD-150-1C	SW-1520		C-16	A53	?	4	0.237	VT-3	N/A	12	80	4014 TO 4098, TURB AUX FW PUMP SUCTION.	R 11/91	A
4A-SW-125-1			C-33	A53	?	4	0.237	VT-3	NO SUPPORTS	75	80	20I-SW0-125-1, 4640 TO & INCL TEE.	R 11/91	A
4A-SW-125-1A			C-33		?	4	0.237	VT-3	N/A			4A-SW-125-1 TO VALVES 4027 4345.	R 11/91	A
4A-SW-125-1B			C-33		?	4	0.237	VT-3	N/A			4A-SW-125-1 TO VALVES 4028, 4344.	R 11/91	A
4A-SW-125-1C			C-16		?	4	0.237	VT-3	N/A			16A-SW0-125-1, 4623 TO 4098.	A 11/91	A
5A-FW7-900-1	AFW-200		C-1	A106	?	5	0.375	VT-3	N/A	125	100	3I-FW7-900-1 TO VALVE 3998, 3F-FW7-900-1	R 11/91	A
5B-FW7-900-1	AFW-200		C-1A	A106	?	5	0.375	VT-3	NO SUPPORTS	125	100	3F-FW7-900-1 TO RDCR BEFORE 4003.	R 11/91	A
5C-FW7-900-1	AFW-400,200		C-1B	A106	?	5	0.375	VT-3	NO SUPPORTS	125	100	3H-FW7-900-1 TO 3J-FW7-900-1.	R 11/91	A

PID No.: 33013-1238
Class: 2
System: STANDBY AUXILIARY FEEDWATER
Comp Type: PIPING

ISI Line #	Gilbert Ln. #	SWR Line	Fig. #	Matrl.	IN?	Size	TK(in.)	Method	ASME Exemption	Po	Temp.	Line Description/Remarks	Revise	Status
3C-FW-902S-1A	AFW-500	FW-1001	C-20	A106	Y	3	0.3		IWC-1222(A)	715	505	14A-FW-900-1A TO 9706A, 9704A.	R 06/93	A
3C-FW-902S-1B	AFW-400	FW-1005	C-24	A106	Y	3	0.3		IWC-1222(A)	715	505	14B-FW-900-1B TO 9706B, 9704A.	R 06/93	A

PID No.: 33013-1238
Class: 3
System: STANDBY AUXILIARY FEEDWATER
Comp Type: COMPONENTS

ISI Line #	Gilbert Ln. #	SWR Line	Fig. #	Matrl.	IN?	Size	TK(in.)	Method	ASME Exemption	Po	Temp.	Line Description/Remarks	Revise	Status
PSF01A			N/A			4	0	VT-3	NO IWA			STANDBY AFW PUMP C.	R 12/93	A
PSF01B			N/A			4	0	VT-3	NO IWA			STANDBY AFW PUMP D.	R 12/93	A

PID No.: 33013-1238
Class: 3
System: STANDBY AUXILIARY FEEDWATER
Comp Type: PIPING

ISI Line #	Gilbert Ln. #	SWR Line	Fig. #	Matrl.	IN?	Size	TK(in.)	Method	ASME Exemption	Po	Temp.	Line Description/Remarks	Revise	Status
1.5A-FW8-902S			C-22	A106	?	1.5	0.2	VT-3	N/A			3A-FW8-902S-A TO LFW08.	R 11/91	A
1.5B-FW8-902S			C-22A	A106	?	1.5	0.2	VT-3	N/A			3A-FW8-902S-B TO LFW07.	R 11/91	A
3A-FW8-902S-A			C-22	A106	?	3	0.3	VT-3	N/A			STBY AUX FW PUMP C DISCHARGE TO 9704A.	R 11/91	A
3A-FW8-902S-B			C-22	A106	?	3	0.3	VT-3	N/A			STBY AUX FW PUMP D DISCHARGE TO 9704B.	R 11/91	A
3C-FW8-902S			C-23	A106	?	3	0.3	VT-3	N/A			3A-FW8-902S-A TO 3A-FW8-902S-B.	R 11/91	A
4A-CD-152S			C-28A	A106	?	4	0.3	VT-3	NO SUPPORTS			9707A TO 4A-FW8-152S-A.	R 06/93	A
4A-FW8-152S-A			C-28	A106	?	4	0.3	VT-3	N/A			9629A TO STBY AUX FW PUMP C SUCTION.	R 11/91	A
4A-FW8-152S-B			C-28	A106	?	4	0.3	VT-3	N/A			9629B TO STBY AUX FW PUMP D SUCTION.	R 11/91	A
4B-CD-152S			C-28A	A106	?	4	0.3	VT-3	NO SUPPORTS			9707B TO 4A-FW8-152S-B.	R 06/93	A

PID No.: 33013-1239-1
Class: 3
System: DIESEL GENERATORS
Comp Type: COMPONENTS

ISI Line #	Gilbert Ln. #	SWR Line	Fig. #	Matrl.	IN?	Size	TK(in.)	Method	ASME Exemption	Po	Temp.	Line Description/Remarks	Revise	Status
ESW08A			C-37			5	0	VT-3	N/A			DIESEL GEN A JACKET WATER HEAT EXCHGR.	R 12/93	A
ESW09A			N/A			3	0		IWD-1220(A2)			DIESEL GEN A LUBE OIL COOLER.	R 05/98	A
FDG01			N/A			0.75	0		IWD-1220(A2)			DIESEL GEN A PRIMARY FILTER.	R 05/98	A
FDG02			N/A			0.75	0		IWD-1220(A2)			DIESEL GEN A PRIMARY FILTER.	R 05/98	A
FDG03			N/A			0.5	0		IWD-1220(A2)			DIESEL GEN A SECONDARY FILTER.	R 05/98	A
FDG04			N/A			0.5	0		IWD-1220(A2)			DIESEL GEN A SECONDARY FILTER.	R 05/98	A
FDG05			N/A			3	0		IWD-1220(A2)			DIESEL GEN A LUBE OIL FILTER.	R 05/98	A
PDG01A			N/A			5	0	VT-3	NO IWA			DIESEL GEN A JACKET WATER PUMP.	R 12/93	A
PDG02A			N/A			3	0		IWD-1220(A2)			DIESEL GEN A FUEL OIL TRANSFER PUMP.	R 05/98	A
PDG04A			N/A			0.75	0		IWD-1220(A2)			DIESEL GEN A FUEL OIL PRIMING PUMP.	R 05/98	A
PDG05A			N/A			0.5	0		IWD-1220(A2)			DIESEL GEN A FUEL OIL BOOSTER PUMP.	R 05/98	A
PDG06A			N/A			3	0		IWD-1220(A2)			DIESEL GEN A LUBE OIL PUMP.	R 05/98	A
PDG07A			N/A			0.75	0		IWD-1220(A2)			DIESEL GEN A PRE-LUBE OIL PUMP.	R 05/98	A
PDG08			N/A			1.5	0		IWD-1220(A2)			DIESEL GEN A AIR STARTING MOTOR.	R 05/98	A
TDG01A			N/A			0	0		IWD-1220(A2)			DIESEL GEN A FUEL OIL STORAGE TANK.	R 05/98	A
TDG02A			N/A			0	0		IWD-1220(A2)			DIESEL GEN A COOLING WATER EXPANSION TK.	R 05/98	A
TDG03A			N/A			2	0		IWD-1220(A2)			DIESEL GEN A STARTING AIR RECEIVER A1.	R 05/98	A
TDG03B			N/A			2	0		IWD-1220(A2)			DIESEL GEN A STARTING AIR RECEIVER A2.	R 05/98	A
TDG04A			N/A			0	0		IWD-1220(A2)			DIESEL GEN A FUEL OIL DAY TANK.	R 05/98	A

PID No.: 33013-1239-1
Class: 3
System: DIESEL GENERATORS
Comp Type: PIPING

ISI Line #	Gilbert Ln. #	SWR Line	Fig. #	Matrl.	IN?	Size	TK(in.)	Method	ASME Exemption	Po	Temp.	Line Description/Remarks	Revise	Status
1.25A-FO-150-6A			N/A		?	1.25	0.133		IWD-1220(A1)			1.5B TO DAY TANK A.	R 05/98	A
1.5A-FO-150-6A			N/A	A53	?	1.5	0.133		IWD-1220(A1)			DAY TANK A TO 5960A, 2A.	R 05/98	A
1.5A-SA-150-4A			N/A	A53	?	1.5	0.133		IWD-1220(A1)			2A TO DG-A AIR STARTING MOTOR.	R 05/98	A
1.5A-SW-125-1A			N/A	A53	?	1.5	0.133		IWD-1220(A1)			5900A TO COOLING WATER EXPANSION TANK.	R 05/98	A
1.5B-FO-150-6A			N/A	A53	?	1.5	0.133		IWD-1220(A1)			1.25A TO 1A.	R 05/98	A
1.5C-FO-150-6A			N/A	A53	?	1.5	0.133		IWD-1220(A1)			5913 TO 5909 & 3A.	R 05/98	A
1.5D-FO-150-6A			N/A		?	1.5	0.133		IWD-1220(A1)			5965 TO 1A.	R 05/98	A
20A-DG-150-4A			C-39	A53	?	20	0.2	VT-3	N/A			AIR INTAKE DG 1A.	R 03/94	A
20B-DG-150-4A			C-39	A53	?	20	0.25	VT-3	N/A			AIR EXHAUST DG 1A.	R 03/94	A
2A-FO-150-6A			N/A	A53	?	2	0.145		IWD-1220(A1)			1.5A TO DIESEL OIL STORAGE TANK A.	R 05/98	A
2A-SA-150-4A			N/A	A53	?	2	0.145		IWD-1220(A1)			AIR RECEIVERS A1 & A2 TO 5905A & B, 5975	R 05/98	A
2B-FO-150-6A			N/A	A53	?	2	0.145		IWD-1220(A1)			OIL TRANSFER PUMP TO 5965 & 5976.	R 05/98	A
2C-FO-150-6A			N/A	A53	?	2	0.145		IWD-1220(A1)			1.5A TO 5967 & 5959.	R 05/98	A
2D-FO-150-6A			N/A	A53	?	2	0.145		IWD-1220(A1)			3A TO 3B.	R 05/98	A
3A-FO-150-6A			N/A	A53	?	3	0.216		IWD-1220(A1)			DIESEL OIL STORAGE TANK TO 5955, 2" RED.	R 05/98	A
3B-FO-150-6A			N/A	A53	?	3	0.216		IWD-1220(A1)			2D TO OIL TRANSFER PUMP.	R 05/98	A
5A-DG-A			C-35		?	5	0	VT-3	NO SUPPORTS			JW-HX-A TO JW PUMP A SUCT.	R 06/93	A
5B-DG-A			C-35		?	5	0	VT-3	NO SUPPORTS			JW PUMP A DISCHG TO DG-A.	R 06/93	A
5C-DG-A			C-35		?	5	0	VT-3	N/A			DG-A RETURN LINE TO JW-HX-A.	R 06/93	A

PID No.: 33013-1239-2
Class: 3
System: DIESEL GENERATORS
Comp Type: COMPONENTS

ISI Line #	Gilbert Ln. #	SWR Line	Fig. #	Matrl.	IN?	Size	TK(in.)	Method	ASME Exemption	Po	Temp.	Line Description/Remarks	Revise	Status
ESW08B			C-38			5	0	VT-3	N/A			DIESEL GEN B JACKET WATER HEAT EXCHGR.	R 12/93	A
ESW09B			N/A			3	0		IWD-1220(A2)			DIESEL GEN B LUBE OIL COOLER.	R 05/98	A
FDG08			N/A			0.75	0		IWD-1220(A2)			DIESEL GEN B PRIMARY FILTER.	R 05/98	A
FDG09			N/A			0.75	0		IWD-1220(A2)			DIESEL GEN B PRIMARY FILTER.	R 05/98	A
FDG10			N/A			0.5	0		IWD-1220(A2)			DIESEL GEN B SECONDARY FILTER.	R 05/98	A
FDG11			N/A			0.5	0		IWD-1220(A2)			DIESEL GEN B SECONDARY FILTER.	R 05/98	A
FDG12			N/A			3	0		IWD-1220(A2)			DIESEL GEN B LUBE OIL FILTER.	R 05/98	A
PDG01B			N/A			5	0	VT-3	NO IWA			DIESEL GEN B JACKET WATER PUMP.	R 12/93	A
PDG02B			N/A			3	0		IWD-1220(A2)			DIESEL GEN B FUEL OIL TRANSFER PUMP.	R 05/98	A
PDG04B			N/A			0.75	0		IWD-1220(A2)			DIESEL GEN B FUEL OIL PRIMING PUMP.	R 05/98	A
PDG05B			N/A			0.5	0		IWD-1220(A2)			DIESEL GEN B FUEL OIL BOOSTER PUMP.	R 05/98	A
PDG06B			N/A			3	0		IWD-1220(A2)			DIESEL GEN B LUBE OIL PUMP.	R 05/98	A
PDG07B			N/A			0.75	0		IWD-1220(A2)			DIESEL GEN B PRE-LUBE OIL PUMP.	R 05/98	A
PDG09			N/A			1.5	0		IWD-1220(A2)			DIESEL GEN B AIR STARTING MOTOR.	R 05/98	A
TDG01B			N/A			0	0		IWD-1220(A2)			DIESEL GEN B FUEL OIL STORAGE TANK.	R 05/98	A
TDG02B			N/A			0	0		IWD-1220(A2)			DIESEL GEN B COOLING WATER EXPANSION TK.	R 05/98	A
TDG03C			N/A			2	0		IWD-1220(A2)			DIESEL GEN B STARTING AIR RECEIVER A1.	R 05/98	A
TDG03D			N/A			2	0		IWD-1220(A2)			DIESEL GEN B STARTING AIR RECEIVER A2.	R 05/98	A
TDG04B			N/A			0	0		IWD-1220(A2)			DIESEL GEN B FUEL OIL DAY TANK.	R 05/98	A

PID No.: 33013-1239-2
Class: 3
System: DIESEL GENERATORS
Comp Type: PIPING

ISI Line #	Gilbert Ln. #	SWR Line	Fig. #	Matrl.	IN?	Size	TK(in.)	Method	ASME Exemption	Po	Temp.	Line Description/Remarks	Revise	Status
1.25A-FO-150-6B			N/A		?	1.25	0.133		IWD-1220(A1)			1.5B TO DAY TANK B.	R 05/98	A
1.5A-FO-150-6B			N/A	A53	?	1.5	0.133		IWD-1220(A1)			DAY TANK B TO 5960B, 2A.	R 05/98	A
1.5A-SA-150-4B			N/A	A53	?	1.5	0.133		IWD-1220(A1)			2A TO DG-B AIR STARTING MOTOR.	R 05/98	A
1.5A-SW-125-1B			N/A	A53	?	1.5	0.133		IWD-1220(A1)			5900B TO COOLING WATER EXPANSION TANK.	R 05/98	A
1.5B-FO-150-6B			N/A	A53	?	1.5	0.133		IWD-1220(A1)			1.25A TO 1A.	R 05/98	A
1.5C-FO-150-6B			N/A	A53	?	1.5	0.133		IWD-1220(A1)			5914 TO 5910 & 3A.	R 05/98	A
1.5D-FO-150-6B			N/A		?	1.5	0.133		IWD-1220(A1)			5966 TO 1A.	R 05/98	A
20A-DG-150-4B			C-40	A53	?	20	0.25	VT-3	N/A			AIR INTAKE DG 1B.	R 03/94	A
20B-DG-150-4B			C-40	A53	?	20	0.25	VT-3	N/A			AIR EXHAUST DG 1B.	R 03/94	A
2A-FO-150-6B			N/A	A53	?	2	0.145		IWD-1220(A1)			1.5A TO DIESEL OIL STORAGE TANK B.	R 05/98	A
2A-SA-150-4B			N/A	A53	?	2	0.145		IWD-1220(A1)			AIR RECEIVERS B1 & B2 TO 5906A & B, 5975	R 05/98	A
2B-FO-150-6B			N/A	A53	?	2	0.145		IWD-1220(A1)			OIL TRANSFER PUMP TO 5966 & 5976.	R 05/98	A
2C-FO-150-6B			N/A	A53	?	2	0.145		IWD-1220(A1)			1.5A TO 5967 & 5960.	R 05/98	A
2D-FO-150-6B			N/A	A53	?	2	0.145		IWD-1220(A1)			3A TO 3B.	R 05/98	A
3A-FO-150-6B			N/A	A53	?	3	0.216		IWD-1220(A1)			DIESEL OIL STORAGE TANK TO 5956, 2" RED.	R 05/98	A
3B-FO-150-6B			N/A	A53	?	3	0.438		IWD-1220(A1)			2D TO OIL TRANSFER PUMP.	R 05/98	A
5A-DG-B			C-36		?	5	0	VT-3	NO SUPPORTS			JW-HX-B TO JW PUMP SUCT.	R 06/93	A
5B-DG-B			C-36		?	5	0	VT-3	NO SUPPORTS			JW PUMP B DISCHG TO DG-B.	R 06/93	A
5C-DG-B			C-36		?	5	0	VT-3	N/A			DG-B RETURN LINE TO JW-HX-B.	R 06/93	A

PID No.: 33013-1245
Class: 2
System: AUXILIARY COOLANT-CCW
Comp Type: COMPONENTS

ISI Line #	Gilbert Ln. #	SWR Line	Fig. #	Matrl.	IN?	Size	TK(in.)	Method	ASME Exemption	Po	Temp.	Line Description/Remarks	Revise	Status
PAC01A	1247		B-28		-	0.75	0	VT-3	N/A	410	350	RHR PUMP A.	R 12/93	A
PAC01B	1247		B-28		-	0.75	0	VT-3	N/A	410	350	RHR PUMP B.	R 12/93	A

PID No.: 33013-1245
Class: 3
System: AUXILIARY COOLANT-CCW
Comp Type: COMPONENTS

ISI Line #	Gilbert Ln. #	SWR Line	Fig. #	Matrl.	IN?	Size	TK(in.)	Method	ASME Exemption	Po	Temp.	Line Description/Remarks	Revise	Status
EAC01A			C-41			10	0	VT-3	N/A			COMPONENT COOLING WATER HEAT EXCHGR A.	R 12/93	A
EAC01B			C-41			10	0	VT-3	N/A			COMPONENT COOLING WATER HEAT EXCHGR B.	R 12/93	A
EAC02A			B-109			10	0	N/A	N/A			RESIDUAL HEAT REMOVAL HEAT EXCHGR A.	R 12/93	A
EAC02B			B-109			10	0	N/A	N/A			RESIDUAL HEAT REMOVAL HEAT EXCHGR B.	R 12/93	A
EAC04A			N/A			1	0		IWD-1220(A2)	<27	<200	S/G BLOWDOWN SAMPLE HEAT EXCHGR A.	R 05/98	A
EAC04B			N/A			1	0		IWD-1220(A2)	<27	<200	S/G BLOWDOWN SAMPLE HEAT EXCHGR B.	R 05/98	A
EAC05A			N/A			1	0		IWD-1220(A2)	<27	<200	PRESSURIZER LIQUID SPACE SAMPLE HE.	R 05/98	A
EAC05B			N/A			1	0		IWD-1220(A2)	<27	<200	RC LOOP B HOT LEG SAMPLE HEAT EXCHGR.	R 05/98	A
EAC05C			N/A			1	0		IWD-1220(A2)	<27	<200	PRESSURIZER STEAM SPACE SAMPLE HE.	R 05/98	A
EAC06A			N/A			0.5	0		IWD-1220(A2)			RHR PUMP COOLER A.	R 05/98	A
EAC06B			N/A			0.5	0		IWD-1220(A2)			RHR PUMP COOLER B.	R 05/98	A
PAC02A						10	0	VT-3	NO IWA			COMPONENT COOLING WATER PUMP A.	R 12/93	A
PAC02B						10	0	VT-3	NO IWA			COMPONENT COOLING WATER PUMP B.	R 12/93	A
TAC01						0	0	VT-3	N/A			COMPONENT COOLING WATER SURGE TANK.	R 12/93	A

PID No.: 33013-1245
Class: 3
System: AUXILIARY COOLANT-CCW
Comp Type: PIPING

ISI Line #	Gilbert Ln. #	SWR Line	Fig. #	Matrl.	IN?	Size	TK(in.)	Method	ASME Exemption	Po	Temp.	Line Description/Remarks	Revise	Status
1.5A-AC5-152			N/A		?	1.5	0.145		IWD-1220(A1)	<15	<200	3A TO VALVE 747C.	R 05/98	A
1.5B-AC5-152			N/A		?	1.5	0.145		IWD-1220(A1)	<15	<200	VALVE 747E TO 1S, PAS COOLER.	R 05/98	A
1.5C-AC5-152			N/A		?	1.5	0.145		IWD-1220(A1)	<15	<200	1S, PAS COOLERS TO VALVE 747F.	R 05/98	A
10A-AC5-152	CC-100	N/A	C-2	A53	?	10	0.365	VT-3	N/A	<15	<200	VALVE 723A TO 14" TEE, 14A.	R 11/91	A
10B-AC5-152	CC-100	N/A	C-2	A53	?	10	0.365	VT-3	NO SUPPORTS	<15	<200	VALVE 723B TO 14X10" REDUCER.	R 11/91	A
10C-AC5-152	CC-100	N/A	C-2	A53	?	10	0.365	VT-3	NO SUPPORTS	<15	<200	14" REDUCER TO VALVE 733A, CCHE A.	R 11/91	A
10D-AC5-152	CC-100	N/A	C-2	A53	?	10	0.365	VT-3	N/A	<15	<200	14" REDUCER TO VALVE 733B, CCHE B.	R 11/91	A
10E-AC5-152	CC-200	N/A	C-4	A53	?	10	0.365	VT-3	N/A	<15	<200	CCHE A TO VALVE 734A, 14B.	R 11/91	A
10F-AC5-152	CC-200	N/A	C-4	A53	?	10	0.365	VT-3	N/A	<15	<200	14B TO RHRHE B.	R 11/91	A
10G-AC5-152	CC-200	N/A	C-4	A53	?	10	0.365	VT-3	N/A	<15	<200	14B TO RHRHE A.	R 11/91	A
10H-AC5-152	CC-300	N/A	C-6	A53	?	10	0.365	VT-3	N/A	<15	<200	RHRHE B OUTLET TO 14" TEE.	R 11/91	A
10I-AC5-152	CC-300	N/A	C-6	A53	?	10	0.365	VT-3	N/A	<15	<200	RHRHE A OUTLET TO 14" REDUCER.	R 11/91	A
10J-AC5-152	CC-300	N/A	C-6	A53	?	10	0.365	VT-3	NO SUPPORTS	<15	<200	14C TO CC PUMP A SUCTION.	R 11/91	A
10K-AC5-152	CC-300	N/A	C-6	A53	?	10	0.365	VT-3	NO SUPPORTS	<15	<200	14C TO CC PUMP B SUCTION.	R 11/91	A
10L-AC5-152	CC-200	N/A	C-4	A53	?	10	0.365	VT-3	N/A	<15	<200	CCHE B TO 734B, 14B.	R 11/91	A
14A-AC5-152	CC-100	N/A	C-2	A53	?	14	0.375	VT-3	N/A	<15	<200	10X14 RDCR FROM B CC PUMP TO 10" RDCRS.	R 11/91	A
14B-AC5-152	CC-200	N/A	C-4	A53	?	14	0.375	VT-3	N/A	<15	<200	734B TO 10" REDUCING ELL BEFORE 738A.	R 11/91	A
14C-AC5-152	CC-300	N/A	C-6	A53	?	14	0.375	VT-3	N/A	<15	<200	14" TEE AT RHRHE OUTLETS TO CC PUMPS.	R 11/91	A
2A-AC5-152	CC-240,120	N/A	C-4	A53	?	2	0.154		IWD-1220(A1)	<15	<200	10G TO 707A, RHR PUMP A.	R 05/98	A
2B-AC5-152	CC-240,120	N/A	N/A	A53	?	2	0.154		IWD-1220(A1)	<15	<200	2A TO 707B, RHR PUMP B.	R 05/98	A
2C-AC5-152	CC-140,180	N/A	N/A	A53	?	2	0.154		IWD-1220(A1)	<15	<200	RHR PUMP B TO 708B, 2D.	R 05/98	A
2D-AC5-152	CC-170,180	N/A	C-6	A53	?	2	0.154		IWD-1220(A1)	<15	<200	RHR PUMP A TO 741A, 769, 10I.	R 05/98	A

PID No.: 33013-1245
Class: 3
System: AUXILIARY COOLANT-CCW
Comp Type: PIPING

ISI Line #	Gilbert Ln. #	SWR Line	Fig. #	Matrl.	IN?	Size	TK(in.)	Method	ASME Exemption	Po	Temp.	Line Description/Remarks	Revise	Status
2E-AC5-152		N/A	N/A		?	2	0.154		IWD-1220(A1)	<15	<200	699 TO CC SURGE TANK.	R 05/98	A
2F-AC5-152		N/A	N/A		?	2	0.154		IWD-1220(A1)	<15	<200	CC SURGE TANK TO 731A.	R 05/98	A
2G-AC5-152		N/A	N/A		?	2	0.154		IWD-1220(A1)	<15	<200	CC SURGE TANK TO 713.	R 05/98	A
2H-AC5-152	CC-170	N/A	N/A	A53	?	2	0.154		IWD-1220(A1)	<15	<200	4C TO 823, 729.	R 05/98	A
2I-AC5-152			C-6		?	2	0.154		IWD-1220(A1)	<15	<200	740A TO 10I.	R 05/98	A
2J-AC5-152			C-6		?	2	0.154		IWD-1220(A1)	<15	<200	740B TO 14C.	R 05/98	A
2K-AC5-152			N/A		?	2	0.154		IWD-1220(A1)	<15	<200	CC SURGE TANK TO RCV017.	R 05/98	A
3A-AC5-152	CC-340	N/A	C-4	A53	?	3	0.216		IWD-1220(A1)	<15	<200	DRAIN FROM 14B TO SAMPLE HES.	R 05/98	A
3B-AC5-152	CC-350	N/A	N/A	A53	?	3	0.216		IWD-1220(A1)	<15	<200	SAMPLE HES TO 772D.	R 05/98	A
3C-AC5-152	CC-350	N/A	C-6	A53	?	3	0.216		IWD-1220(A1)	<15	<200	772D TO CC PUMPS SUCTION.	R 05/98	A
3D-AC5-152		N/A	N/A		?	3	0.216		IWD-1220(A1)	<15	<200	CC SURGE TANK TO 732.	R 05/98	A
3E-AC5-152			N/A		?	3	0.216		IWD-1220(A1)	<15	<200	747H TO 3C.	R 05/98	A
4A-AC5-152	CC-200	N/A	C-2	A53	?	4	0.237		IWD-1220(A1)	<15	<200	10C TO ACAHHX.	R 05/98	A
4B-AC5-152	CC-200	N/A	C-4	A53	?	4	0.237		IWD-1220(A1)	<15	<200	10E TO ACAPCP.	R 05/98	A
4C-AC5-152	CC-300	N/A	C-6	A53	?	4	0.237		IWD-1220(A1)	<15	<200	CC SURGE TANK TO 728, 6A.	R 05/98	A
6A-AC5-152			C-6		?	6	0.28	VT-3	NO SUPPORTS	<15	<200	14C TO 4C.	R 01/92	A
8A-AC5-152	CC-100	N/A	C-2	A53	?	8	0.365	VT-3	N/A	<15	<200	CC PUMP A TO VALVE 723A.	R 11/91	A
8B-AC5-152	CC-100	N/A	C-2	A53	?	8	0.365	VT-3	N/A	<15	<200	CC PUMP B TO VALVE 723B.	R 11/91	A

PID No.: 33013-1246-1
Class: 1
System: AUXILIARY COOLANT-CCW
Comp Type: COMPONENTS

ISI Line #	Gilbert Ln. #	SWR Line	Fig. #	Matrl.	IN?	Size	TK(in.)	Method	ASME Exemption	Po	Temp.	Line Description/Remarks	Revise	Status
PRC01A			A-7			1	0	SUR/VOL	N/A			REACTOR COOLANT PUMP A - CCW.	R 12/93	A
PRC01B			A-7			1	0	SUR/VOL	N/A			REACTOR COOLANT PUMP B - CCW.	R 12/93	A

PID No.: 33013-1246-1
Class: 2
System: AUXILIARY COOLANT-CCW
Comp Type: COMPONENTS

ISI Line #	Gilbert Ln. #	SWR Line	Fig. #	Matrl.	IN?	Size	TK(in.)	Method	ASME Exemption	Po	Temp.	Line Description/Remarks	Revise	Status
ECH03			N/A			2	0		IWC-1222(C)	<27	<200	EXCESS LETDOWN HEAT EXCHANGER.	R 05/98	A
ECH08A			N/A			3	0		IWC-1222(C)	<27	<200	RCP A UPPER BEARING COOLER.	R 05/98	A
ECH08B			N/A			3	0		IWC-1222(C)	<27	<200	RCP B UPPER BEARING COOLER.	R 05/98	A
RX SUPT COOL			N/A			4	0		IWC-1222(C)	<27	<200	REACTOR SUPPORT COOLER A.	R 12/93	A
RX SUPT COOL			N/A			4	0		IWC-1222(C)	<27	<200	REACTOR SUPPORT COOLER B.	R 12/93	A

PID No.: 33013-1246-1
Class: 2
System: AUXILIARY COOLANT-CCW
Comp Type: PIPING

ISI Line #	Gilbert Ln. #	SWR Line	Fig. #	Matrl.	IN?	Size	TK(in.)	Method	ASME Exemption	Po	Temp.	Line Description/Remarks	Revise	Status
1.5A-AC6-152A	CC-700	N/A	B-30	A53	?	1.5	0.145		IWC-1222(A)	<15	<200	3C TO RCP A.	R 06/93	A
1.5A-AC6-152B			N/A		?	1.5	0.145		IWC-1222(A)	<15	<200	RCP A TO .75H, 1M.	R 06/93	A
1.5A-AC6-152C			N/A		?	1.5	0.145		IWC-1222(A)	<15	<200	1A, FI-611 TO 3F.	R 06/93	A
1.5A-AC6-152D			N/A		?	1.5	0.145		IWC-1222(A)	<15	<200	1M TO 3F.	R 06/93	A
1.5B-AC6-152A	CC-400	N/A	B-29	A53	?	1.5	0.145		IWC-1222(A)	<15	<200	3O TO RCP B.	R 06/93	A
1.5B-AC6-152B			N/A		?	1.5	0.145		IWC-1222(A)	<15	<200	RCP B TO .75O.	R 06/93	A
1.5B-AC6-152C			N/A		?	1.5	0.145		IWC-1222(A)	<15	<200	1G-AC6-152A TO 1G-AC6-152B.	R 06/93	A
2A-AC-152			N/A	A53	N	2	0.154		IWC-1222(A)	90	70	PEN 124 TO VALVE 743.	R 06/93	A
2B-AC-152	CC-220		N/A	A53	N	2	0.154		IWC-1222(A)	90	70	PEN 124 TO VALVE 745.	R 06/93	A
2F-AC6-152	CC-525	N/A	N/A	A53	?	2	0.109		IWC-1222(A)	<15	<200	4H TO RX SUPT COOLER A.	R 06/93	A
2J-AC6-152	CC-525	N/A	N/A	A53	?	2	0.109		IWC-1222(A)	<15	<200	4D TO RX SUPT COOLER B.	R 06/93	A
2M-AC6-152	CC-700	N/A	N/A	A53	?	2	0.154		IWC-1222(A)	<15	<200	3F TO 758A.	R 06/93	A
2P-AC6-152	CC-400	N/A	N/A	A53	?	2	0.154		IWC-1222(A)	<15	<200	4P TO 758B.	R 06/93	A
2Q-AC6-152	CC-525	N/A	N/A	A53	?	2	0.109		IWC-1222(A)	<15	<200	RX SUPT COOLER B TO 4O.	R 06/93	A
2S-AC6-152			N/A		?	2	0.154		IWC-1222(A)	<15	<200	RX SUPT COOLER A TO 4L.	R 06/93	A
3A-AC-152	CC-220		N/A	A58	N	3	0.216		IWC-1222(A)	90	70	PEN 125 TO VALVE 759B.	R 06/93	A
3B-AC-152	CC-220		N/A	A58	N	3	0.216		IWC-1222(A)	90	70	PEN 126 TO VALVE 759A.	R 06/93	A
3C-AC-152	CC-330 & CC-45		B-29	A53	N	3	0.216		IWC-1222(A)	90	70	RDCR BEFORE PEN 128 IN CONT TO VAL 749B.	R 06/93	A
3C-AC6-152	CC-600	N/A	B-30	A53	?	3	0.216		IWC-1222(A)	<15	<200	4B TO 751A, 4T.	R 06/93	A
3D-AC-152	CC-625 & CC-33		B-30	A53	N	3	0.216		IWC-1222(A)	90	70	RDCR BEFORE PEN 127 IN CONT TO VAL 749A.	R 06/93	A
3D-AC6-152	CC-600	N/A	N/A	A53	?	3	0.216		IWC-1222(A)	<15	<200	RCP B TO REDUCER AT 4R.	R 06/93	A
3E-AC6-152	CC-700	N/A	C-34	A53	?	3	0.216		IWC-1222(A)	<15	<200	RCP A TO REDUCER AT 4E.	R 06/93	A

PID No.: 33013-1246-1
Class: 2
System: AUXILIARY COOLANT-CCW
Comp Type: PIPING

ISI Line #	Gilbert Ln. #	SWR Line	Fig. #	Matrl.	IN?	Size	TK(in.)	Method	ASME Exemption	Po	Temp.	Line Description/Remarks	Revise	Status
3F-AC6-152	CC-700	N/A	N/A	A53	?	3	0.216		IWC-1222(A)	<15	<200	4E TO 757A, 4F.	R 06/93	A
3I-AC6-152	CC-400	N/A	N/A	A53	?	3	0.216		IWC-1222(A)	<15	<200	4R TO 757B, 4P.	R 06/93	A
3J-AC6-152	CC-525	N/A	N/A	A53	?	3	0.216		IWC-1222(A)	<15	<200	4H TO RX SUPT COOLER A.	R 06/93	A
3K-AC6-152	CC-525	N/A	N/A	A53	?	3	0.216		IWC-1222(A)	<15	<200	4D TO RX SUPT COOLER B.	R 06/93	A
3M-AC6-152	CC-525	N/A	N/A	A53	?	3	0.216		IWC-1222(A)	<15	<200	RX SUPT COOLER A TO 4L.	R 06/93	A
3N-AC6-152	CC-525	N/A	N/A	A53	?	3	0.216		IWC-1222(A)	<15	<200	RX SUPT COOLER B TO 4O.	R 06/93	A
3O-AC6-152	CC-450	N/A	B-29	A53	?	3	0.216		IWC-1222(A)	<15	<200	4G TO 751B, 4S.	R 06/93	A
3Q-AC6-152			B-30		?	3	0.216		IWC-1222(A)	<15	<200	4T TO RCP A.	R 06/93	A
4A-AC-152	CC-450		B-29	A53	N	4	0.237		IWC-1222(A)	90	70	VALVE 750B IN CONT TO RDCR PEN 128.	R 06/93	A
4B-AC-152	CC-625		B-30	A53	N	4	0.237		IWC-1222(A)	90	70	VALVE 750A TO RDCR BEFORE PEN 127 IN CON	R 06/93	A
4B-AC6-152	CC-625, CC-600	N/A	N/A	A53	?	4	0.237		IWC-1222(A)	<15	<200	750A AT PEN 127 TO 3C.	R 06/93	A
4D-AC6-152	CC-525	N/A	C-9	A53	?	4	0.237		IWC-1222(A)	<15	<200	6F TO RX SUPT COOLER B HEADERS 4M & 4V.	R 06/93	A
4E-AC6-152	CC-700	N/A	N/A	A53	?	4	0.237		IWC-1222(A)	<15	<200	3E AT RPC A TO 3F.	R 06/93	A
4F-AC6-152	CC-700,-725	N/A	N/A	A53	?	4	0.237		IWC-1222(A)	<15	<200	3F TO PEN 126.	R 06/93	A
4G-AC6-152	CC-450	N/A	B-29	A53	?	4	0.237		IWC-1222(A)	<15	<200	750B AT PEN 128 TO 3" RDCR (3O).	R 06/93	A
4H-AC6-152	CC-525	N/A	C-9	A53	?	4	0.237		IWC-1222(A)	<15	<200	6F TO RX SUPT COOLER A HEADERS 4J & 4I.	R 06/93	A
4I-AC6-152	CC-525	N/A	N/A	A53	?	4	0.237		IWC-1222(A)	<15	<200	4H TO RX SUPT COOLER A.	R 06/93	A
4J-AC6-152	CC-525	N/A	N/A	A53	?	4	0.237		IWC-1222(A)	<15	<200	4H TO RX SUPT COOLER A.	R 06/93	A
4K-AC6-152	CC-525	N/A	N/A	A53	?	4	0.237		IWC-1222(A)	<15	<200	RX SUPT COOLER A TO 4L.	R 06/93	A
4L-AC6-152	CC-525	N/A	C-9	A53	?	4	0.237		IWC-1222(A)	<15	<200	RX SUPT COOLER A DSCHG HDRS 4K, 4U TO 6H	R 06/93	A
4M-AC6-152	CC-525	N/A	N/A	A53	?	4	0.237		IWC-1222(A)	<15	<200	4D TO RX SUPT COOLER B.	R 06/93	A
4N-AC6-152	CC-525	N/A	N/A	A53	?	4	0.237		IWC-1222(A)	<15	<200	RX SUPT COOLER B TO 4O.	R 06/93	A

PID No.: 33013-1246-1
Class: 2
System: AUXILIARY COOLANT-CCW
Comp Type: PIPING

ISI Line #	Gilbert Ln. #	SWR Line	Fig. #	Matrl.	IN?	Size	TK(in.)	Method	ASME Exemption	Po	Temp.	Line Description/Remarks	Revise	Status
4O-AC6-152	CC-525	N/A	C-9	A53	?	4	0.237		IWC-1222(A)	<15	<200	RX SUPT COOLER B DSCHG HDRS 4N, 4W TO 6H	R 06/93	A
4P-AC6-152	CC-400	N/A	N/A	A53	?	4	0.237		IWC-1222(A)	<15	<200	757B TO P125.	R 06/93	A
4R-AC6-152			N/A		?	4	0.237		IWC-1222(A)	<15	<200	3D AT RCP B TO 3I, 757B.	R 06/93	A
4S-AC6-152			B-29		?	4	0.237		IWC-1222(A)	<15	<200	3O TO RCP B.	R 06/93	A
4T-AC6-152			B-30		?	4	0.237		IWC-1222(A)	<15	<200	3C TO 3Q AT RCP A.	R 06/93	A
4U-AC6-152			N/A		?	4	0.237		IWC-1222(A)	<15	<200	RX SUPT COOLER A TO 4L.	R 06/93	A
4V-AC6-152			N/A		?	4	0.237		IWC-1222(A)	<15	<200	4D TO RX SUPT COOLER B.	R 06/93	A
4W-AC6-152			N/A		?	4	0.237		IWC-1222(A)	<15	<200	RX SUPT COOLER B TO 4O.	R 06/93	A
6A-AC-152	CC-200		C-5	A53	N	6	0.28		IWC-1222(C)	90	70	VALVE 813 TO PEN 131.	R 06/93	A
6B-AC-152	CC-220		C-5	A53	N	6	0.28		IWC-1222(C)	90	70	PEN 130 TO VALVE 814.	R 06/93	A
6F-AC6-152	CC-500,-525	N/A	C-9	A53	?	6	0.28		IWC-1222(C)	<15	<200	PEN 131 TO 4D, 4H.	R 06/93	A
6H-AC6-152	CC-575	N/A	C-9	A53	?	6	0.28		IWC-1222(C)	<15	<200	REACTOR SUPPORT COOLERS, 4O TO PEN 130.	R 06/93	A

PID No.: 33013-1246-1
Class: 3
System: AUXILIARY COOLANT-CCW
Comp Type: PIPING

ISI Line #	Gilbert Ln. #	SWR Line	Fig. #	Matrl.	IN?	Size	TK(in.)	Method	ASME Exemption	Po	Temp.	Line Description/Remarks	Revise	Status
2A-AC6-152	CC-330	N/A	N/A	A53	?	2	0.154		IWD-1220(A1)	<15	<200	4A TO 742A, & 743 TO EXCESS LETDN HE.	R 05/98	A
2I-AC6-152	CC-220	N/A	N/A	A53	?	2	0.154		IWD-1220(A1)	<15	<200	EXCESS LETDN HE TO P124 & 745 TO 742B,4Q	R 05/98	A
3A-AC6-152	CC-330	N/A	N/A	A53	?	3	0.216		IWD-1220(A1)	<15	<200	4A TO 749A.	R 05/98	A
3B-AC6-152	CC-330	N/A	N/A	A53	?	3	0.216		IWD-1220(A1)	<15	<200	4A TO 749B.	R 05/98	A
3G-AC6-152	CC-220	N/A	C-5	A53	?	3	0.216		IWD-1220(A1)	<15	<200	759A TO 762A, 8B.	R 05/98	A
3H-AC6-152	CC-220	N/A	N/A	A53	?	3	0.216		IWD-1220(A1)	<15	<200	759B TO 762B, 4Q.	R 05/98	A
4A-AC6-152	CC-330	N/A	C-5	A53	?	4	0.237		IWD-1220(A1)	<15	<200	8A TO REDUCER BEFORE 749A.	R 05/98	A
4Q-AC6-152	CC-220	N/A	C-5	A53	?	4	0.237		IWD-1220(A1)	<15	<200	CONNECTS 8B, 3H, & 2I.	R 05/98	A
6A-AC6-152	CC-200	N/A	C-5	A53	?	6	0.28	VT-3	NO SUPPORTS	<15	<200	8A TO 813.	R 06/93	A
6D-AC6-152	CC-220	N/A	C-5	A53	?	6	0.28	VT-3	N/A	<15	<200	814 TO 815A, 8B.	R 06/93	A
8A-AC6-152	CC-200	N/A	C-5	A53	?	8	0.322	VT-3	N/A	<15	<200	COMPONENT COOLING HE TO 817, 6" REDUCER.	R 06/93	A
8B-AC6-152	CC-220	N/A	C-5	A53	?	8	0.322	VT-3	N/A	<15	<200	4Q TO 816, 14" REDUCER.	R 06/93	A

PID No.: 33013-1246-2
Class: 2
System: AUXILIARY COOLANT-CCW
Comp Type: COMPONENTS

ISI Line #	Gilbert Ln. #	SWR Line	Fig. #	Matrl.	IN?	Size	TK(in.)	Method	ASME Exemption	Po	Temp.	Line Description/Remarks	Revise	Status
PSI01A	1262		N/A		-	0.5	0		IWC-1221(B2)	155	200	SAFETY INJECTION PUMP A - SEAL WTR CONN.	R 05/98	A
PSI01B	1262		N/A		-	0.5	0		IWC-1221(B2)	155	200	SAFETY INJECTION PUMP B - SEAL WTR CONN.	R 05/98	A
PSI01C	1262		N/A		-	0.5	0		IWC-1221(B2)	155	200	SAFETY INJECTION PUMP C - SEAL WTR CONN.	R 05/98	A
PSI02A	1261		N/A		-	0.75	0	VT	NI IWA	205	70	CONTAINMENT SPRAY PUMP A - SEAL WTR CONN	R 05/98	A
PSI02B	1261		N/A		-	0.75	0	VT	NO IWA	205	70	CONTAINMENT SPRAY PUMP B - SEAL WTR CONN	R 05/98	A

PID No.: *33013-1246-2*
Class: 3
System: AUXILIARY COOLANT-CCW
Comp Type: COMPONENTS

ISI Line #	Gilbert Ln. #	SWR Line	Fig. #	Matrl.	IN?	Size	TK(in.)	Method	ASME Exemption	Po	Temp.	Line Description/Remarks	Revise	Status
EAC08A			N/A			0.75	0		IWD-1220(A2)	<27	<200	SAFETY INJECTION PUMP A COOLER A.	R 05/98	A
EAC08B			N/A			0.75	0		IWD-1220(A2)	<27	<200	SAFETY INJECTION PUMP A COOLER B.	R 05/98	A
EAC09A			N/A			0.75	0		IWD-1220(A2)	<27	<200	SAFETY INJECTION PUMP B COOLER A.	R 05/98	A
EAC09B			N/A			0.75	0		IWD-1220(A2)	<27	<200	SAFETY INJECTION PUMP B COOLER B.	R 05/98	A
EAC10A			N/A			0.75	0		IWD-1220(A2)	<27	<200	SAFETY INJECTION PUMP C COOLER A.	R 05/98	A
EAC10B			N/A			0.75	0		IWD-1220(A2)	<27	<200	SAFETY INJECTION PUMP C COOLER B.	R 05/98	A
EAC11A			N/A			0.5	0		IWD-1220(A2)	<27	<200	CONTAINMENT SPRAY PUMP A COOLER.	R 05/98	A
EAC11B			N/A			0.5	0		IWD-1220(A2)	<27	<200	CONTAINMENT SPRAY PUMP B COOLER.	R 05/98	A
ECH01			N/A			2.5	0		IWD-1220(A2)	<27	<200	BORIC ACID EVAP DISTILATE COOLER.	R 05/98	A
ECH04			N/A			2	0		IWD-1220(A2)	<27	<200	SEAL WATER HEAT EXCHANGER.	R 05/98	A
ECH05			N/A			4	0		IWD-1220(A2)	<27	<200	NON-REGENERATIVE HEAT EXCHANGER.	R 05/98	A
ECH06			N/A			0.75	0		IWD-1220(A2)	<27	<200	BORIC ACID EVAP AIR EJECTOR CONDENSOR.	R 05/98	A
ECH07			N/A			6	0	VT-3	NO IWA	<27	<200	BORIC ACID EVAPORATOR.	R 12/93	A
EWD01A			N/A			1.5	0		IWD-1220(A2)	<27	<200	WASTE GAS COMPRESSOR A SEAL WATER HE.	R 05/98	A
EWD01B			N/A			1.5	0		IWD-1220(A2)	<27	<200	WASTE GAS COMPRESSOR B SEAL WATER HE.	R 05/98	A
EWD09			N/A			2	0		IWD-1220(A2)	<27	<200	WASTE EVAP CONDENSING HEAT EXCHGR.	R 05/98	A
EWD10			N/A			0.75	0		IWD-1220(A2)	<27	<200	WASTE EVAP AIR EJECTOR HEAT EXCHGR.	R 05/98	A
EWD11			N/A			0.75	0		IWD-1220(A2)	<27	<200	WASTE EVAPORATOR DISTILATE COOLER.	R 05/98	A

PID No.: 33013-1246-2
Class: 3
System: AUXILIARY COOLANT-CCW
Comp Type: PIPING

ISI Line #	Gilbert Ln. #	SWR Line	Fig. #	Matrl.	IN?	Size	TK(in.)	Method	ASME Exemption	Po	Temp.	Line Description/Remarks	Revise	Status
1.5D-AC6-152	CC-230	N/A	N/A	A53	?	1.5	0.145		IWD-1220(A1)	<15	<200	3P TO GAS COMPRESSOR HE B.	R 05/98	A
1.5E-AC6-152	CC-230	N/A	N/A	A53	?	1.5	0.145		IWD-1220(A1)	<15	<200	GAS COMPRESSOR HE B TO 2H.	R 05/98	A
1.5F-AC6-152	CC-230	N/A	N/A	A53	?	1.5	0.145		IWD-1220(A1)	<15	<200	3P TO GAS COMPRESSOR HE A.	R 05/98	A
1.5G-AC6-152		N/A	N/A	A53	?	1.5	0.145		IWD-1220(A1)	<15	<200	GAS COMPRESSOR HE A TO 2H.	R 05/98	A
2B-AC6-152	CC-250	N/A	C-3	A53	?	2	0.154		IWD-1220(A1)	<15	<200	6B TO 777B, 777C.	R 05/98	A
2C-AC6-152	CC-260	N/A	C-3	A53	?	2	0.154		IWD-1220(A1)	<15	<200	CS PUMPS A & B TO 6E.	R 05/98	A
2D-AC6-152	CC-300	N/A	C-7	A53	?	2	0.154		IWD-1220(A1)	<15	<200	DISTILLATE COOLER TO 748B, 6G.	R 05/98	A
2E-AC6-152	CC-230	N/A	C-7	A53	?	2	0.154		IWD-1220(A1)	<15	<200	6C TO DISTILLATE COOLER.	R 05/98	A
2G-AC6-152	CC-270	N/A	C-3	A53	?	2	0.154		IWD-1220(A1)	<15	<200	6B TO SI PUMP COOLERS.	R 05/98	A
2H-AC6-152	CC-230	N/A	C-7	A53	?	2	0.154		IWD-1220(A1)	<15	<200	1I TO 6G.	R 05/98	A
2K-AC6-152	CC-320	N/A	C-3	A53	?	2	0.154		IWD-1220(A1)	<15	<200	SI PUMP COOLERS TO 764C, 6E.	R 05/98	A
2N-AC6-152	CC-310	N/A	C-3	A53	?	2	0.154		IWD-1220(A1)	<15	<200	6B TO 763, SEAL WATER HE.	R 05/98	A
2O-AC6-152	CC-230	N/A	C-7	A53	?	2	0.154		IWD-1220(A1)	<15	<200	WASTE EVAP CONDENSING HE TO 764B, 6G.	R 05/98	A
2R-AC6-152	CC-160	N/A	C-3	A53	?	2	0.154		IWD-1220(A1)	<15	<200	SEAL WATER HX TO 6E.	R 05/98	A
2T-AC6-152		N/A	N/A	A53	?	2	0.154		IWD-1220(A1)	<15	<200	3P TO 764A, EWD09.	R 05/98	A
3P-AC6-152	CC-230	N/A	C-7	A53	?	3	0.216		IWD-1220(A1)	<15	<200	6C TO 2" REDUCER BEFORE 764A, 2T.	R 05/98	A
4C-AC6-152	CC-160	N/A	C-3	A53	?	4	0.237		IWD-1220(A1)	<15	<200	6B TO 773, NON REGEN HE, 778, 6E.	R 05/98	A
6B-AC6-152	CC-310	N/A	C-3	A53	?	6	0.28	VT-3	N/A	<15	<200	COMPONENT COOLING HE TO 4C, 773.	R 06/93	A
6C-AC6-152	CC-230	N/A	C-7	A53	?	6	0.28	VT-3	N/A	<15	<200	COMP CLG HE TO 760A & BORIC ACID EVAP.	R 06/93	A
6E-AC6-152	CC-160	N/A	C-3	A53	?	6	0.28	VT-3	N/A	<15	<200	4C TO COMPONENT COOLING PUMPS.	R 06/93	A
6G-AC6-152	CC-190, CC-300	N/A	C-7	A53	?	6	0.28	VT-3	N/A	<15	<200	BORIC ACID EVAP TO COMP COOLING PUMPS.	R 06/93	A

PID No.: 33013-1247
Class: 1
System: AUXILIARY COOLANT-RHR
Comp Type: PIPING

ISI Line #	Gilbert Ln. #	SWR Line	Fig. #	Matrl.	IN?	Size	TK(in.)	Method	ASME Exemption	Po	Temp.	Line Description/Remarks	Revise	Status
10A-AC7-2501-A			A-15	A376	Y	10	1	SUR/VOL	N/A			RHR FROM VALVE 700 TO 701.	A 06/93	A
10A-AC7-2501-B			A-14	A376	Y	10	1	SUR/VOL	N/A			RHR FROM VALVE 720 TO 721.	A 06/93	A

PID No.: 33013-1247
Class: 2
System: AUXILIARY COOLANT-RHR
Comp Type: COMPONENTS

ISI Line #	Gilbert Ln. #	SWR Line	Fig. #	Matrl.	IN?	Size	TK(in.)	Method	ASME Exemption	Po	Temp.	Line Description/Remarks	Revise	Status
EAC02A	1247		B-109		-	8	0	VOL	N/A	410	350	RESIDUAL HEAT REMOVAL HEAT EXCHGR A.	R 12/93	A
EAC02B	1247		B-109		-	8	0	VOL	N/A	410	350	RESIDUAL HEAT REMOVAL HEAT EXCHGR B.	R 12/93	A
EAC06A			N/A			0.5	0		IWC-1221(A2)			RHR PUMP COOLER A.	R 05/98	A
EAC06B			N/A			0.5	0		IWC-1221(A2)			RHR PUMP COOLER B.	R 05/98	A
PAC01A	1247		B-28		-	10	0	VT-3	N/A	410	350	RHR PUMP A, MFG=PACIFIC.	R 12/93	A
PAC01B	1247		B-28		-	10	0	VT-3	N/A	410	350	RHR PUMP B, MFG=PACIFIC.	R 12/93	A

PID No.: 33013-1247
Class: 2
System: AUXILIARY COOLANT-RHR
Comp Type: PIPING

ISI Line #	Gilbert Ln. #	SWR Line	Fig. #	Matrl.	IN?	Size	TK(in.)	Method	ASME Exemption	Po	Temp.	Line Description/Remarks	Revise	Status
1.25A-AC-601			B-24			1.25	0		IWC-1221(A1)			10H-AC-601 TO CAP.	R 05/98	A
10A-AC-601	RHR-300	10-RH-2001	B-22	A312	Y	10	0.365	SUR/VOL	N/A	410	350	VALVE 701 THRU PEN P140 TO 1ST TEE.	R 11/91	A
10-AC-601	RHR-100	10-RH-2013	B-17	A312	Y	10	0.365	SUR/VOL	N/A	350	350	V 720 TO REDUCER 10X6 BEFORE VALVE 717.	R 11/91	A
10B-AC-601	RHR-300	10-RH-2001	B-20	A312	Y	10	0.365	SUR/VOL	N/A	410	350	10" TEE FROM 10A-AC-601 TO VALVE 856.	R 11/91	A
10C-AC-601	RHR-300	10-RH-2004	B-20A	A312	Y	10	0.365	SUR/VOL	N/A	350	350	TEE ON 10D-AC-601 TO RHR PUMP A.	R 11/91	A
10D-AC-601	RHR-300	10-RH-2004	B-20	A312	Y	10	0.365	SUR/VOL	N/A	350	350	TEE ON 10A-AC-601 TO RHR PUMP B.	R 11/91	A
10E-AC-601	RHR-300	10-RH-2003	B-20	A312	Y	10	0.365	SUR/VOL	N/A	350	350	TEE ON 10D-AC-601 TO VALVE 850B.		A
10EE-AC-151	RHR-300	10-RH-2003	B-20	A312	Y	10	0.365		IWC-1221(D)	350	350	VALVE 850B TO 1ST REDUCING ELBOW.	R 05/98	A
10G-AC-601	RHR-300	10-SI-2010	B-20A	A312	Y	10	0.365	SUR/VOL	N/A	350	350	VALVE 850A PAST TEE TO 10C-AC-601.	R 11/91	A
10GG-AC-151	RHR-300	10-SI-2010	B-20A	A312	Y	10	0.365		IWC-1221(D)	350	350	VALVE 850A TO 1ST REDUCING ELBOW.	R 05/98	A
10H-AC-601	RHR-350,RHR-4	10-RH-2007	B-24	A312	N	10	0.365	SUR/VOL	N/A	410	350	CONT. OF 8B-AC-601 RED ELBOW TO TEE.		A
2A-AC-601	RHR-300,RHR-4		B-25	A312	3	2	0.154		IWC-1221(A1)	350	350	10-AC-601 TO 10B-AC-601.	R 05/98	A
2-AC-601			B-20A	A312	-	2	0.109		IWC-1221(A1)	410	350	10A-AC-601 TO VALVE 252.	R 05/98	A
2B-AC-601	RHR-350		B-24	A312	N	2	0.154		IWC-1221(A1)	410	350	8C-AC-601 TO VALVE 1812A.	R 05/98	A
2C-AC-601	RHR-400		B-24	A312	N	2	0.154		IWC-1221(A1)	410	350	8E-AC-601 TO VALVE 1812B.	R 05/98	A
2F-AC-601	CVC-100		B-17	A312	Y	2	0.154		IWC-1221(A1)	350	350	10-AC-601 TO VALVE 702, 2F-CH-601.	R 05/98	A
3A-AC-601			B-26			3	0		IWC-1221(A1)			8X-AC-601 TO 4X3 RDCR ON 4A-AC-601.	R 05/98	A
3B-AC-601			B-27			3	0		IWC-1221(A1)			6C-AC-601 TO 4A-AC-601.	R 05/98	A
4A-AC-601			B-20			4	0		IWC-1221(A1)			10B-AC-601 TO 4X3 RDCR ON 3A-AC-601.	A 05/98	A
4C-AC-601			B-16B		-	4	0		IWC-1221(A1)	410	350	6C-AC-601 TO VALVE 1816B.	R 05/98	A
6A-AC-601	RHR-100	6-RH-2016	B-18	A312	Y	6	0.28	SUR/VOL	N/A	350	350	VALVE 852B TO 10-AC-601 IN CONT.		A
6-AC-601	RHR-100	6-RH-2015	B-17	A312	Y	6	0.28	SUR/VOL	N/A	350	350	VALVE 852A TO 10-AC-601 IN CONT.		A

PID No.: 33013-1247
Class: 2
System: AUXILIARY COOLANT-RHR
Comp Type: PIPING

ISI Line #	Gilbert Ln. #	SWR Line	Fig. #	Matrl.	IN?	Size	TK(in.)	Method	ASME Exemption	Po	Temp.	Line Description/Remarks	Revise	Status
6B-AC-601	RHR-400	6-RH-2012	B-25	A312	Y	6	0.28	SUR/VOL	N/A	350	350	10-AC-601 TO 10H-AC-601.	R 11/91	A
6C-AC-601	RHR-400,RHR-4	6-RH-2014	B-27	A304	Y	6	0.28	SUR/VOL	N/A	410	350	8A-AC-601 TO VALVE 857C.	R 11/91	A
6C-SI-151			B-19			6	0	SUR/VOL	N/A			VALVE 857C TO 6X8 REDUCER (HPSI).	R 12/93	A
6D-AC-601	RHR-450	6-RH-2011	B-26	A312	Y	6	0.28	SUR/VOL	N/A	410	350	8X-AC-601 TO VALVE 857B.	R 11/91	A
6D-SI-151			B-19			6	0	SUR/VOL	N/A			VALVE 857B TO 6X8 TEE (HPSI).	R 12/93	A
6E-AC-151	RHR-300	6-SI-2011	B-21	A312	N	6	0.134		IWC-1221(D)	350	350	10" TEE ON 10EE-AC-151 TO VALVE 1813B.	R 05/98	A
6K-AC-151	RHR-300	6-SI-2014	B-21	A312	N	6	0.134		IWC-1221(D)	350	350	10" TEE ON 10GG-AC-151 TO VALVE 1813A.	R 05/98	A
6L-AC-601			B-16B			6	0.28	SUR/VOL	N/A			4C-AC-601, 1816B TO 1816A, 4C-SI-301	R 06/93	A
8A-AC-601	RHR-400	8-RH-2010	B-26	A312	Y	8	0.322	SUR/VOL	N/A	350	350	10X8 REDUCER TO RESIDUAL HEAT EXCH A.		A
8-AC-601	RHR-400	8-RH-2010	B-26	A312	Y	8	0.322	SUR/VOL	N/A	350	350	10-AC-601 TEE-RED TO TEE PAST HVC-624.		A
8B-AC-601	RHR-350		B-23	A312	N	8	0.322	SUR/VOL	N/A	410	350	DISCHG RHR PMP A TO 1ST REDUCING ELBOW.		A
8C-AC-601	RHR-350	8-RH-2008	B-23	A312	N	8	0.322	SUR/VOL	N/A	410	350	10" TEE ON 10H-AC-601 TO RH EX B.		A
8D-AC-601	RHR-350	8-RH-2008	B-23	A312	N	8	0.322	SUR/VOL	N/A	410	350	DISCHG RHR PMP B TO 1ST TEE AFTER V 710B		A
8E-AC-601	RHR-400	8-RH-2017	B-24	A312	Y	8	0.322	SUR/VOL	N/A	410	350	REDUCER BEFORE VALVE 714 TO RH HT EX A.		A
8F-AC-151	RHR-300	8-SI-2012	B-20A	A312	Y	8	0.5		IWC-1221(D)	350	350	VALVE 851A TO RED ELBOW BY VALVE 850A.	R 05/98	A
8FF-AC-151	RHR-300	8-SI-2009	B-20	A312	Y	8	0.5		IWC-1221(D)	350	350	VALVE 851B TO RED ELBOW BY VALVE 850B.	R 05/98	A
8K-SI-151	SI-151		B-19	A312	Y	8	0.148	SUR/VOL	N/A			6X8 RED ON 6C-SI-151 TO 8X10 RED (HPSI).	R 12/93	A
8X-AC-601	RHR-400	8-RH-2018	B-26	A312	-	8	0.322	SUR/VOL	N/A	410	350	RES HEAT EX B TO 8X8X6 REDUCER TEE.		A
RHEA-2A-AC-601			B-109	A312	-	2	0.154		IWC-1221(A1)	410	350	RESIDUAL HEAT EXCH. A TO VALVE 807C.	R 05/98	A
RHEA-2B-AC-601			B-109	A312	-	2	0.154		IWC-1221(A1)	410	350	RESIDUAL HEAT EXCH. A TO VALVE 807D.	R 05/98	A
RHEA-2C-AC-601			B-109	A312	-	2	0.154		IWC-1221(A1)	410	350	RESIDUAL HEAT EXCH. A TO VALVE 807E.	R 05/98	A
RHEB-2A-AC-601			B-109	A312	-	2	0.154		IWC-1221(A1)	410	350	RESIDUAL HEAT EXCH. B TO VALVE 807B.	R 05/98	A

PID No.: 33013-1247
Class: 2
System: AUXILIARY COOLANT-RHR
Comp Type: PIPING

ISI Line #	Gilbert Ln. #	SWR Line	Fig. #	Matrl.	IN?	Size	TK(in.)	Method	ASME Exemption	Po	Temp.	Line Description/Remarks	Revise	Status
RHEB-2B-AC-601			B-109	A312	-	2	0.154		IWC-1221(A1)	410	350	RESIDUAL HEAT EXCH. B TO VALVE 807F.	R 05/98	A
RHEB-2C-AC-601			B-109	A312	-	2	0.154		IWC-1221(A1)	410	350	RESIDUAL HEAT EXCH. B TO VALVE 807G.	R 05/98	A

PID No.: 33013-1248
Class: 3
System: AUXILIARY COOLING-SPENT FUEL
Comp Type: COMPONENTS

ISI Line #	Gilbert Ln. #	SWR Line	Fig. #	Matrl.	IN?	Size	TK(in.)	Method	ASME Exemption	Po	Temp.	Line Description/Remarks	Revise	Status
EAC13			N/A			8	0		IWD-1220(C)	<27	<200	SPENT FUEL POOL HEAT EXCHGR B.	R 05/98	A
PAC07B			N/A			8	0		IWD-1220(C)	<27	<200	SPENT FUEL POOL RECIRC PUMP B.	R 05/98	A

PID No.: 33013-1248
Class: 3
System: AUXILIARY COOLING-SPENT FUEL
Comp Type: PIPING

ISI Line #	Gilbert Ln. #	SWR Line	Fig. #	Matrl.	IN?	Size	TK(in.)	Method	ASME Exemption	Po	Temp.	Line Description/Remarks	Revise	Status
2A-AC8-151-SFP			N/A			2	0		IWD-1220(A1)			6C TO VALVE 8661.	R 05/98	A
2B-AC8-151-SFP			N/A			2	0		IWD-1220(A1)			6D TO VALVE 8632.	R 05/98	A
4A-AC8-151			N/A			4	0		IWD-1220(A1)			SPENT FUEL POOL TO 4C, VALVE 782.	R 05/98	A
4B-AC8-151			N/A			4	0		IWD-1220(A1)			SPENT FUEL POOL TO 4D, VALVE 781.	R 05/98	A
4C-AC8-151-SFP			N/A			4	0		IWD-1220(A1)			VALVE 782 TO 8A.	R 05/98	A
4D-AC8-151-SFP			N/A			4	0		IWD-1220(A1)			VALVE 781 TO 8A.	R 05/98	A
4E-AC8-151-SFP			N/A			4	0		IWD-1220(A1)			6D TO VALVE 8614.	R 05/98	A
4F-AC8-151-SFP			N/A			4	0		IWD-1220(A1)			6D TO VALVE 8664.	R 05/98	A
6A-AC8-151-SFP			N/A			6	0		IWD-1220(C)	<27	<200	8A TO VALVE 8662.	R 05/98	A
6B-AC8-151-SFP			N/A			6	0		IWD-1220(C)	<27	<200	8A TO VALVE 8654.	R 05/98	A
6C-AC8-151-SFP			N/A			6	0		IWD-1220(C)	<27	<200	SPENT FUEL POOL RECIRC PUMP B TO 8B.	R 05/98	A
6D-AC8-151-SFP			N/A			6	0		IWD-1220(C)	<27	<200	8C TO VALVE 8663, 6E.	R 05/98	A
6E-AC8-151			N/A			6	0		IWD-1220(C)	<27	<200	6D TO SPENT FUEL POOL.	R 05/98	A
8A-AC8-151-SFP			N/A			8	0		IWD-1220(C)	<27	<200	4C & 4D TO 6A & 6B & 8657, SFP PUMP B.	R 05/98	A
8B-AC8-151-SFP			N/A			8	0		IWD-1220(C)	<27	<200	6C TO SPENT FUEL POOL HE B.	R 05/98	A
8C-AC8-151-SFP			N/A			8	0		IWD-1220(C)	<27	<200	SPENT FUEL POOL HE B TO 6D.	R 05/98	A

PID No.: 33013-1250-1
Class: 2
System: SERVICE WATER
Comp Type: COMPONENTS

ISI Line #	Gilbert Ln. #	SWR Line	Fig. #	Matrl.	IN?	Size	TK(in.)	Method	ASME Exemption	Po	Temp.	Line Description/Remarks	Revise	Status
PSI01A	1262		N/A		-	0.75	0		IWC-1221(B2)	155	200	SAFETY INJECTION PUMP A - SW CLNG CONN.	R 05/98	A
PSI01B	1262		N/A		-	0.75	0		IWC-1221(B2)	155	200	SAFETY INJECTION PUMP B - SW CLNG CONN.	R 05/98	A
PSI01C	1262		N/A		-	0.75	0		IWC-1221(B2)	155	200	SAFETY INJECTION PUMP C - SW CLNG CONN.	R 05/98	A

PID No.: 33013-1250-1
Class: 3
System: SERVICE WATER
Comp Type: COMPONENTS

ISI Line #	Gilbert Ln. #	SWR Line	Fig. #	Matrl.	IN?	Size	TK(in.)	Method	ASME Exemption	Po	Temp.	Line Description/Remarks	Revise	Status
AAA01A			N/A			2.5	0		IWD-1220(A2)			CHARGING PUMP A AIR COOLER.	R 05/98	A
AAA01B			N/A			2.5	0		IWD-1220(A2)			CHARGING PUMP B AIR COOLER.	R 05/98	A
AAA02A			N/A			2.5	0		IWD-1220(A2)			RHR PUMP A AIR COOLER.	R 05/98	A
AAA02B			N/A			2.5	0		IWD-1220(A2)			RHR PUMP B AIR COOLER.	R 05/98	A
AAA03A			N/A			2.5	0		IWD-1220(A2)			SAFETY INJECTION PUMP A AIR COOLER.	R 05/98	A
AAA03B			N/A			2.5	0		IWD-1220(A2)			SAFETY INJECTION PUMP B AIR COOLER.	R 05/98	A
AAA03C			N/A			2.5	0		IWD-1220(A2)			SAFETY INJECTION PUMP C AIR COOLER.	R 05/98	A
AAA05			N/A			2.5	0		IWD-1220(A2)			PENETRATION AIR COOLER.	R 05/98	A
ESW08A			C-37			4	0	VT-3	N/A			DIESEL GEN A JACKET WATER HEAT EXCHGR.	R 12/93	A
ESW08B			C-38			4	0	VT-3	N/A			DIESEL GEN B JACKET WATER HEAT EXCHGR.	R 12/93	A
ESW09A			N/A			4	0	VT-3	NO IWA			DIESEL GEN A LUBE OIL COOLER.	R 12/93	A
ESW09B			N/A			4	0	VT-3	NO IWA			DIESLE GEN B LUBE OIL COOLER.	R 12/93	A
PSW01A						12	0	VT-3	NO IWA			SERVIVE WATER PUMP A.	R 12/93	A
PSW01B						12	0	VT-3	NO IWA			SERVIVE WATER PUMP B.	R 12/93	A
PSW01C						12	0	VT-3	NO IWA			SERVIVE WATER PUMP C.	R 12/93	A
PSW01D						12	0	VT-3	NO IWA			SERVIVE WATER PUMP D.	R 12/93	A

PID No.: 33013-1250-1
Class: 3
System: SERVICE WATER
Comp Type: PIPING

ISI Line #	Gilbert Ln. #	SWR Line	Fig. #	Matrl.	IN?	Size	TK(in.)	Method	ASME Exemption	Po	Temp.	Line Description/Remarks	Revise	Status
1.25A-SW0-152N			N/A		?	1.25	0		IWD-1220(A1)			4789, 4790 TO .75A, SI PUMPS.	R 05/98	A
1.25B-SW0-152N			N/A		?	1.25	0		IWD-1220(A1)			SI PUMPS, .75A TO 3F.	R 05/98	A
1.5A-SW0-125-1			N/A	A53	?	1.5	0.145		IWD-1220(A1)	75	80	3D TO SI COOLER C,(AAA03C) 3F.	R 07/98	A
1.5C-SW0-125-1			N/A	A53	?	1.5	0.145		IWD-1220(A1)	75	80	3D TO SI COOLER A (AAA03A), 3F.	R 07/98	A
1.5E-SW0-125-1			N/A	A53	?	1.5	0.145		IWD-1220(A1)	75	80	3D TO SI COOLER B (AAA03B), 3F.	R 07/98	A
1.5F-SW0-125-1			N/A	A53	?	1.5	0.145		IWD-1220(A1)	75	80	3D TO PEN COOLER (ACA05), 3F.	R 07/98	A
10B-SW0-125-1			C-13	A53	?	10	0.375	VT-3	N/A	75	80	14K TO 4613.	R 06/93	A
14A-SW0-125-1			C-17	A53	?	14	0.375	VT-3	N/A	75	80	SERVICE WATER PUMP A TO 20E.	R 06/93	A
14B-SW0-125-1			C-17	A53	?	14	0.375	VT-3	N/A	75	80	SERVICE WATER PUMP B TO 20E.	R 06/93	A
14C-SW0-125-1			C-17	A53	?	14	0.375	VT-3	N/A	75	80	SERVICE WATER PUMP C TO 20G.	R 06/93	A
14D-SW0-125-1			C-17	A53	?	14	0.375	VT-3	N/A	75	80	SERVICE WATER PUMP D TO 20G.	R 06/93	A
14E-SW0-125-1	SW-1500		C-16B	A53	?	14	0.375	VT-3	N/A	75	80	16A TO 4627, 6H.	R 06/93	A
14K-SWO-125-1	SW-1400		C-13	A53	?	14	0.375	VT-3	NO SUPPORTS	75	80	4665 TO 4A, 10B.	R 06/93	A
16A-SW0-125-1	SW-1850		C-16	A53	?	16	0.375	VT-3	N/A	75	80	16C TO 4623, 20I.	R 06/93	A
16B-SW0-125-9	SW-1850		C-13	A53	?	16	0.375		IWF-1230	75	80	20B TO 6A (BURRIED).	R 06/93	A
16C-SW0-125-9	SW-1500		C-16	A53	?	16	0.375		IWF-1230	75	80	20A TO 16A (BURRIED).	R 06/93	A
16D-SW0-125-1	SW-1500		C-16	A53	?	16	0.375	VT-3	N/A	75	80	20I TO 14E.	R 06/93	A
20A-SW0-125-9			C-17	A53	?	20	0.375		IWF-1230	75	80	20E TO 20F, 4665 (BURRIED).	R 06/93	A
20B-SW0-125-9	SW-1500		C-17	A53	?	20	0.375		IWF-1230	75	80	20G TO 20H (BURRIED).	R 06/93	A
20E-SW0-125-1			C-17	A53	?	20	0.375	VT-3	N/A			14A, 14B TO 20A.	R 06/93	A
20F-SW0-125-1			C-12	A53	?	20	0.375	VT-3	N/A			20A TO 4616, 4610.	R 06/93	A
20G-SW0-125-1			C-17	A53	?	20	0.375	VT-3	N/A			14C, 14D TO 20B.	R 06/93	A

PID No.: 33013-1250-1
Class: 3
System: SERVICE WATER
Comp Type: PIPING

ISI Line #	Gilbert Ln. #	SWR Line	Fig. #	Matrl.	IN?	Size	TK(in.)	Method	ASME Exemption	Po	Temp.	Line Description/Remarks	Revise	Status
20H-SW0-125-1			C-12	A53	?	20	0.375	VT-3	N/A			20B TO 4615, 4779.	R 06/93	A
20I-SW0-125-1			C-16	A53	?	20	0.375	VT-3	N/A			20B TO 4640, 16A.	R 06/93	A
3A-SW0-125-1	SW-1850		N/A	A53	?	3	0.216		IWD-1220(A1)	75	80	4J TO 4668F.	R 05/98	A
3C-SW0-125-1			N/A	A53	?	3	0.216		IWD-1220(A1)	75	80	4A TO 4667F.	R 05/98	A
3D-SW0-125-1			C-12	A53	?	3	0.216		IWD-1220(A1)	75	80	20F TO 4739, 4769.	R 05/98	A
3E-SW0-125-1			C-12	A53	?	3	0.216		IWD-1220(A1)	75	80	20H TO 4738, 4754.	R 05/98	A
3F-SW0-125-1			C-11	A53	?	3	0.216		IWD-1220(A1)	75	80	4753 TO 4739A, 4739B, DISCHARGE CANAL.	R 05/98	A
4A-SW0-125-1	SW-1850		C-13	A53	?	4	0.237		IWD-1220(A1)	75	80	14K TO DIESEL GENERATOR A COOLERS.	R 05/98	A
4C-SW0-125-1			C-13	A53	?	4	0.237		IWD-1220(A1)	75	80	DIESEL GENERATOR A COOLERS TO 4671, 6G.	R 05/98	A
4E-SW0-125-1			C-13	A53	?	4	0.237		IWD-1220(A1)	75	80	DIESEL GENERATOR B COOLERS TO 4672, 6G.	R 05/98	A
4J-SW0-125-1			C-13	A53	?	4	0.237		IWD-1220(A1)			14K TO DIESEL GENERATOR B COOLERS, 4668B	R 05/98	A
4L-SW0-125-1			C-17	A53	?	4	0.237		IWD-1220(A1)			14B THRU 4612, 4611 TO 14C.	R 05/98	A
6A-SW0-125-1	SW-1850		C-13	A53	?	6	0.28	VT-3	NO SUPPORTS	75	80	16B TO 4668B, 4J.	R 06/93	A
6G-SW0-125-1			C-13	A53	?	6	0.28	VT-3	N/A	75	80	4C, 4E TO 10" REDUCER.	R 06/93	A
8I-SW0-125-1			C-17	A53	?	8	0.327	VT-3	N/A	75	80	20E TO 4609.	R 06/93	A

PID No.: 33013-1250-2
Class: 3
System: SERVICE WATER
Comp Type: COMPONENTS

ISI Line #	Gilbert Ln. #	SWR Line	Fig. #	Matrl.	IN?	Size	TK(in.)	Method	ASME Exemption	Po	Temp.	Line Description/Remarks	Revise	Status
AFA01A			N/A			1.5	0		IWD-1220(A2)			STANDBY AFW PUMP ROOM COOLING UNIT A.	R 05/98	A
AFA01B			N/A			1.5	0		IWD-1220(A2)			STANDBY AFW PUMP ROOM COOLING UNIT B.	R 05/98	A
EAC01A			C-41			14	0	VT-3	N/A			COMPONENT COOLING WATER HEAT EXCHGR A.	R 12/93	A
EAC01B			C-41			14	0	VT-3	N/A			COMPONENT COOLING WATER HEAT EXCHGR B.	R 12/93	A
EAC13			N/A			12	0		IWD-1220(C)	<27	<200	SPENT FUEL POOL HEAT EXCHGR B.	R 05/98	A
EAC14						6	0		IWD-1220(C)	<27	<200	SPENT FUEL POOL HEAT EXCHGR A.	R 05/98	A

PID No.: 33013-1250-2
Class: 3
System: SERVICE WATER
Comp Type: PIPING

ISI Line #	Gilbert Ln. #	SWR Line	Fig. #	Matrl.	IN?	Size	TK(in.)	Method	ASME Exemption	Po	Temp.	Line Description/Remarks	Revise	Status
1.5B-SW0-152S			C-29	A53	?	1.5	0.145		IWD-1220(A1)	75	80	2B TO ROOM COOLING UNIT B, 4F.	R 05/98	A
1.5D-SW0-152S			C-29	A53	?	1.5	0.145		IWD-1220(A1)	75	80	2A TO ROOM COOLING UNIT A, 4G.	R 05/98	A
1.5G-SW0-152S			N/A	A53	?	1.5	0.145		IWD-1220(A1)	75	80	2A TO 9635, 2B.	R 05/98	A
10D-SW0-125-1			C-12	A53	?	10	0.375		IWD-1220(C)	75	80	14H TO 12C.	R 05/98	A
10E-SW0-125-1			C-11	A53	?	10	0.375		IWD-1220(C)	75	80	12D TO 14F.	R 05/98	A
12A-SW0-125-12			N/A	A53	?	12	0.375		IWD-1220(C)	75	80	CCHE A TO 20C.	R 05/98	A
12B-SW0-125-12			N/A	A53	?	12	0.375		IWD-1220(C)	75	80	CCHE B TO 20C.	R 05/98	A
12C-SW0-125-1			N/A	A53	?	12	0.375		IWD-1220(C)	75	80	10D TO SFPHE B.	R 05/98	A
12D-SW0-125-1			N/A	A53	?	12	0.375		IWD-1220(C)	75	80	SFPHE B TO 10E.	R 05/98	A
14F-SW0-125-1	SW-1100		C-11	A53	?	14	0.375	VT-3	N/A	75	80	CCHE A TO 20D.	R 06/93	A
14G-SW0-125-1	SW-1100		C-11	A53	?	14	0.375	VT-3	N/A	75	80	CCHE B TO 20D.	R 06/93	A
14H-SW0-125-1	SW-1000		C-12	A53	?	14	0.375	VT-3	N/A	75	80	20H TO CCHE B.	R 06/93	A
14I-SW0-125-1	SW-1000		C-12	A53	?	14	0.375	VT-3	N/A	75	80	18A TO CCHE A.	R 06/93	A
16E-SW0-125-1			C-12	A53	?	16	0.375	VT-3	NO SUPPORTS	75	80	4610 TO 20H.	R 05/98	A
18A-SW0-125-1	SW-1000		C-12	A53	?	18	0	VT-3	N/A	75	80	20F TO 14I, 6C.	R 06/93	A
2.5E-SW0-125-1			N/A	A53	?	2.5	0.203		IWD-1220(A1)	75	80	12D TO 8633, 8634, 10E.	R 05/98	A
20C-SW0-125-12	SW-1120		N/A	A53	?	20	0.375		IWD-1220(C)	75	80	12A, 12B TO BURRIED DISCHG STRUC SSW01.	R 05/98	A
20D-SW0-125-1	SW-1100		C-11	A53	?	20	0.375	VT-3	N/A	75	80	14F, 14G TO BURRIED DISCHARGE.	R 06/93	A
2A-SW0-152S			C-11	A53	?	2	0.154		IWD-1220(A1)	75	80	14F TO 1.5D.	R 05/98	A
2B-SW0-152S			N/A	A53	?	2	0.154		IWD-1220(A1)	75	80	20C TO 1.5B.	R 05/98	A
3B-SW0-125-12			C-11	A53	?	3	0.216		IWD-1220(A1)	75	80	3F TO 6D.	R 05/98	A
4F-SW0-152S			C-27	A53	?	4	0.237	VT-3	N/A	75	80	14H TO 9626B, 9627B, & 9629B (SAFW).	R 12/93	A

PID No.: 33013-1250-2
Class: 3
System: SERVICE WATER
Comp Type: PIPING

ISI Line #	Gilbert Ln. #	SWR Line	Fig. #	Matrl.	IN?	Size	TK(in.)	Method	ASME Exemption	Po	Temp.	Line Description/Remarks	Revise	Status
4G-SW0-152S			C-26	A53	?	4	0.237	VT-3	N/A	75	80	20F TO 9626A, 9627A, & 9629A (SAFW).	R 12/93	A
4K-SW0-152S			C-29	A53	?	4	0.237	VT-3	N/A	75	80	4F TO 9628A, 9628B, 4G (SAFW).	R 12/93	A
6C-SW0-125-1	SW-1020		C-12	A53	?	6	0.28		IWD-1220(C)	75	80	18A TO SFPHE A.	R 05/98	A
6D-SW0-125-12	SW-1120		C-11	A53	?	6	0.28		IWD-1220(C)	75	80	6E TO 20C.	R 05/98	A
6E-SW0-125-1	SW-1120		C-11	A53	?	6	0.28		IWD-1220(C)	75	80	SFPHE A TO 20D (DISCHARGE).	R 05/98	A
6F-SW0-125-12			C-11	A53	?	6	0.28		IWD-1220(C)	75	80	20D TO 8686.	R 05/98	A
6I-SW0-125-1			C-12	A53	?	6	0.28		IWD-1220(C)	75	80	14I TO 8687.	R 05/98	A

PID No.: 33013-1250-3
Class: 2
System: SERVICE WATER
Comp Type: COMPONENTS

ISI Line #	Gilbert Ln. #	SWR Line	Fig. #	Matrl.	IN?	Size	TK(in.)	Method	ASME Exemption	Po	Temp.	Line Description/Remarks	Revise	Status
ACA01A			N/A			3	0		IWC-1221(A2)			CONTAINMENT RECIRC FAN A COOLER.	R 05/98	A
ACA01B			N/A			3	0		IWC-1221(A2)			CONTAINMENT RECIRC FAN B COOLER.	R 05/98	A
ACA01C			N/A			3	0		IWC-1221(A2)			CONTAINMENT RECIRC FAN C COOLER.	R 05/98	A
ACA01D			N/A			3	0		IWC-1221(A2)			CONTAINMENT RECIRC FAN D COOLER.	R 05/98	A
ACA01E			N/A			3	0		IWC-1221(A2)			CONTAINMENT RECIRC FAN A COOLER.	R 05/98	A
ACA01F			N/A			3	0		IWC-1221(A2)			CONTAINMENT RECIRC FAN A COOLER.	R 05/98	A
ACA01G			N/A			3	0		IWC-1221(A2)			CONTAINMENT RECIRC FAN B COOLER.	R 05/98	A
ACA01H			N/A			3	0		IWC-1221(A2)			CONTAINMENT RECIRC FAN B COOLER.	R 05/98	A
ACA01J			N/A			3	0		IWC-1221(A2)			CONTAINMENT RECIRC FAN C COOLER.	R 05/98	A
ACA01K			N/A			3	0		IWC-1221(A2)			CONTAINMENT RECIRC FAN C COOLER.	R 05/98	A
ACA01L			N/A			3	0		IWC-1221(A2)			CONTAINMENT RECIRC FAN D COOLER.	R 05/98	A
ACA01M			N/A			3	0		IWC-1221(A2)			CONTAINMENT RECIRC FAN D COOLER.	R 05/98	A
ACA02A			N/A			2.5	0		IWC-1221(A2)			REACTOR COMPARTMENT COOLER A.	R 05/98	A
ACA02B			N/A			2.5	0		IWC-1221(A2)			REACTOR COMPARTMENT COOLER B.	R 05/98	A
ACA07			N/A			2.5	0		IWC-1221(A2)			CONTAINMENT RECIRC FAN B COOLER.	R 05/98	A
ACA08			N/A			2.5	0		IWC-1221(A2)			CONTAINMENT RECIRC FAN C COOLER.	R 05/98	A
ACA09			N/A			2.5	0		IWC-1221(A2)			CONTAINMENT RECIRC FAN D COOLER.	R 05/98	A
ACA10			N/A			2.5	0		IWC-1221(A2)			CONTAINMENT RECIRC FAN A COOLER.	R 05/98	A

PID No.: 33013-1250-3
Class: 2
System: SERVICE WATER
Comp Type: PIPING

ISI Line #	Gilbert Ln. #	SWR Line	Fig. #	Matrl.	IN?	Size	TK(in.)	Method	ASME Exemption	Po	Temp.	Line Description/Remarks	Revise	Status
1.5A-SW-125			B-50A	A53	-	1.5	0		IWC-1221(A1)	60	80	8M THRU VALVE 4773 TO 2E.	R 05/98	A
1.5KA-SW-125			B-52A	A53		1.5	0		IWC-1221(A1)	60	80	2.5K THRU ACA08, TO 8E	A 07/98	A
1.5KA-SW-125			B-52A	A53		1.5	0		IWC-1221(A1)	60	80	2.5K THRU ACA08, TO 8E	A 07/98	A
1.5KB-SW-125				A53		1.5	0		IWC-1221(A1)	60	80	FM 2.5I TO ACA10	A 07/98	A
1.5KC-SW-125				A53		1.5	0		IWC-1221(A1)	60	80	FM ACA10 TO 2.5M	A 07/98	A
1.5KD-SW-125				A53		1.5	0		IWC-1221(A1)	60	80	FM 2.5J TO ACA07	A 07/98	A
1.5KE-SW-125				A53		1.5	0		IWC-1221(A1)	60	80	FM ACA07 TO 2.5N	A 07/98	A
1.5KF-SW-125				A53		1.5	0		IWC-1221(A1)	60	80	FM ACA08 TO 2.5O	A 07/98	A
1.5KG-SW-125				A53		1.5	0		IWC-1221(A1)	60	80	FM 2.5L TO ACA09	A 07/98	A
1.5KH-SW-125				A53		1.5	0		IWC-1221(A1)	60	80	FM ACA09 TO 2.5P	A 07/98	A
1.5KI-SW-125			B-53A	A53	Y	1.5	0		IWC-1221(A1)	60	80	FM 2.5Q TO 2.5P	A 07/98	A
1.5KJ-SW-125			B-52B	A53	Y	1.5	0		IWC-1221(A1)	60	80	FM 2H THRU V4771 TO 2.5R	A 07/98	A
1.5KK-SW-125			B-51C	A53	Y	1.5	0		IWC-1221(A1)	60	80	FM 8I THRU V4774 TO 2.5N	A 07/98	A
2.5A-SW-125	SW-1410		N/A	A53	Y	2.5	0.203		IWC-1221(A1)	60	80	VALVE 4636 TO 2.5X2.5X2 TEE PAST PEN 201	R 05/98	A
2.5B-SW-125	SW-800		N/A	A53	Y	2.5	0.203		IWC-1221(A1)	60	80	1ST ELBOW PAST PEN 201 TO ACA02B.	R 05/98	A
2.5C-SW-125	SW-450		N/A	A53	Y	2.5	0.203		IWC-1221(A1)	60	80	REACTOR COOLER ACA02B TO PEN 209.	R 05/98	A
2.5D-SW-125	SW-1550		N/A	A53	Y	2.5	0.203		IWC-1221(A1)	60	80	2.5X2.5X2 TEE BY PEN 209 TO VALVE 4635.	R 05/98	A
2.5E-SW-125	SW-1410		N/A	A53	Y	2.5	0.203		IWC-1221(A1)	60	80	VALVE 4758 TO 2.5X2.5X2 TEE BY PEN 209.	R 05/98	A
2.5F-SW-125	SW-300		N/A	A53	Y	2.5	0.203		IWC-1221(A1)	60	80	1ST RED ELBOW BY PEN IN CONT TO ACA02A.	R 05/98	A
2.5G-SW-125	SW-800		N/A	A53	Y	2.5	0.203		IWC-1221(A1)	60	80	REACTOR COOLER ACA02A TO PEN 201.	R 05/98	A
2.5H-SW-125	SW-1550		N/A	A53	Y	2.5	0.203		IWC-1221(A1)	60	80	2.5X2.5X2 TEE BY PEN 201 TO VALVE 4757.	R 05/98	A
2.5I-SW-125			B-50	A53	-	2.5	0		IWC-1221(A1)	60	80	8N THRU ACA10, TO 8M.	R 05/98	A

PID No.: 33013-1250-3
Class: 2
System: SERVICE WATER
Comp Type: PIPING

ISI Line #	Gilbert Ln. #	SWR Line	Fig. #	Matrl.	IN?	Size	TK(in.)	Method	ASME Exemption	Po	Temp.	Line Description/Remarks	Revise	Status
2.5J-SW-125			B-51	A53	-	2.5	0		IWC-1221(A1)	60	80	8J THRU ACA07, TO 8I.	R 05/98	A
2.5K-SW-125			B-52A	A53	-	2.5	0		IWC-1221(A1)	60	80	8F THRU ACA08, TO 8E.	R 05/98	A
2.5L-SW-125			B-53	A53	-	2.5	0		IWC-1221(A1)	60	80	8B THRU ACA09, TO 8A.	R 05/98	A
2.5M-SW-125				A53		2.5	0.203		IWC-1221(A1)	60	80	FM 1.5 RET LN @ACA10 TO RED BFOR V4773	A 07/98	A
2.5N-SW-125				A53		2.5	0.203		IWC-1221(A1)	60	80	FM 1.5 RET LN @ACA07 TO RED BFOR V4774	A 07/98	A
2.5O-SW-125				A53		2.5	0.203		IWC-1221(A1)	60	80	FM 1.5 RET LN @ACA08 TO RED BFOR V4771	A 07/98	A
2.5P-SW-125				A53		2.5	0.203		IWC-1221(A1)	60	80	FM 1.5 RET LN @ACA09 TO RED BFOR V4772	A 07/98	A
2.5Q-SW-125			B-53A	A53	Y	2.5	0.203		IWC-1221(A1)	60	80	FM REDUCER @ PEN 323 TO 1.5KI	A 07/98	A
2.5R-SW-125			B-53B	A53	Y	2.5	0.203		IWC-1221(A1)	60	80	FM 1.5KJ TO 8E	A 07/98	A
2A-SW-125	SW-1410,SW-80		N/A	A53	Y	2	0.154		IWC-1221(A1)	60	80	2.5X2.5X2 TEE AT PEN 201 1ST RED ELBOW.	R 05/98	A
2B-SW-125	SW-450,SW-155		N/A	A53	Y	2	0.154		IWC-1221(A1)	60	80	RED ELBOW BY PEN 209 TO 1ST 2" TEE.	R 05/98	A
2C-SW-125	SW-1410,SW-30		N/A	A53	Y	2	0.154		IWC-1221(A1)	60	80	2.5X2.5X2 TEE BY PEN 209 1ST RED ELBOW.	R 05/98	A
2D-SW-125	SW-800,SW-155		N/A	A53	Y	2	0.154		IWC-1221(A1)	60	80	1ST RED ELBOW BY PEN 201 TO 2" TEE.	R 05/98	A
2E-SW-125			N/A	A53	-	2	0		IWC-1221(A1)	60	80	2.5I-SW-125 PAST VALVE 4794F.	R 05/98	A
2F-SW-125			N/A	A53	-	2	0		IWC-1221(A1)	60	80	2.5J-SW-125 PAST VALVE 4794K.	R 05/98	A
2G-SW-125			N/A	A53	-	2	0		IWC-1221(A1)	60	80	VALVE 4794U TO 2.5P-SW-125.	R 07/98	A
2H-SW-125				A53		2	0.154		IWC-1221(A1)	60	80	FM 2.5O THRU V4794P TO 3A	A 07/98	A
3A-SW-125			N/A	A53	-	3	0.216		IWC-1221(A1)	60	80	CROSS CONNECT FOR ACA07,08, & 10.	R 05/98	A
3B-SW-125			B-50	A53		3	0.216		IWC-1221(A1)	60	80	FM 4A TO ACA01A	A 07/98	A
3C-SW-125			B-50	A53		3	0.216		IWC-1221(A1)	60	80	FM 4B TO ACA01E	A 07/98	A
3D-SW-125			B-50	A53		3	0.216		IWC-1221(A1)	60	80	FM 4C TO ACA01F	A 07/98	A
3E-SW-125			B-50A	A53		3	0.216		IWC-1221(A1)	60	80	FM ACA01A TO 4D	A 07/98	A

PID No.: 33013-1250-3
Class: 2
System: SERVICE WATER
Comp Type: PIPING

ISI Line #	Gilbert Ln. #	SWR Line	Fig. #	Matrl.	IN?	Size	TK(in.)	Method	ASME Exemption	Po	Temp.	Line Description/Remarks	Revise	Status
3F-SW-125			B-50A	A53		3	0.216		IWC-1221(A1)	60	80	FM ACA01E TO 4E	A 07/98	A
3G-SW-125			B-50A	A53		3	0.216		IWC-1221(A1)	60	80	FM ACA01F TO 4F	A 07/98	A
3H-SW-125			B-51A	A53		3	0.216		IWC-1221(A1)	60	80	FM 4G TO ACA01B	A 07/98	A
3I-SW-125			B-51A	A53		3	0.216		IWC-1221(A1)	60	80	FM 4H TO ACA01G	A 07/98	A
3J-SW-125			B-51A	A53		3	0.216		IWC-1221(A1)	60	80	FM 4I TO ACA01H	A 07/98	A
3K-SW-125			B-51B	A53		3	0.216		IWC-1221(A1)	60	80	FM ACA01B TO 4J	A 07/98	A
3L-SW-125			B-51B	A53		3	0.216		IWC-1221(A1)	60	80	FM ACA01G TO 4K	A 07/98	A
3M-SW-125			B-51B	A53		3	0.216		IWC-1221(A1)	60	80	FM ACA01H TO 4L	A 07/98	A
3N-SW-125			B-52A	A53		3	0.216		IWC-1221(A1)	60	80	FM 4M TO ACA01C	A 07/98	A
3O-SW-125			B-52A	A53		3	0.216		IWC-1221(A1)	60	80	FM 4N TO ACA01J	A 07/98	A
3P-SW-125			B-52A	A53		3	0.216		IWC-1221(A1)	60	80	FM 4O TO ACA01K	A 07/98	A
3Q-SW-125			B-52B	A53		3	0.216		IWC-1221(A1)	60	80	FM ACA01C TO 4P	A 07/98	A
3R-SW-125			B-52B	A53		3	0.216		IWC-1221(A1)	60	80	FM ACA01J TO 4X	A 07/98	A
3S-SW-125			B-52B	A53		3	0.216		IWC-1221(A1)	60	80	FM ACA01K TO 4Q	A 07/98	A
3T-SW-125			B-53	A53		3	0.216		IWC-1221(A1)	60	80	FM 4R TO ACA01D	A 07/98	A
3U-SW-125			B-53	A53		3	0.216		IWC-1221(A1)	60	80	FM 4S TO ACA01L	A 07/98	A
3V-SW-125			B-53	A53		3	0.216		IWC-1221(A1)	60	80	FM 4T TO ACA01M	A 07/98	A
3W-SW-125			B-53A	A53		3	0.216		IWC-1221(A1)	60	80	FM ACA01D TO 4U	A 07/98	A
3X-SW-125			B-53A	A53		3	0.216		IWC-1221(A1)	60	80	FM ACA01L TO 4V	A 07/98	A
3Y-SW-125			B-53A	A53		3	0.216		IWC-1221(A1)	60	80	FM ACA01M TO 4W	A 07/98	A
4A-SW-125			B-50	A53		4	0.237		IWC-1221(A1)	60	80	8X4 RDCG ELL TO RDCR ON ACA01A SUPPLY.	R 07/98	A
4B-SW-125			B-50	A53		4	0.237		IWC-1221(A1)	60	80	8X8X4 TEE TO RDCR ON ACA01E SUPPLY.	R 07/98	A

PID No.: 33013-1250-3
Class: 2
System: SERVICE WATER
Comp Type: PIPING

ISI Line #	Gilbert Ln. #	SWR Line	Fig. #	Matrl.	IN?	Size	TK(in.)	Method	ASME Exemption	Po	Temp.	Line Description/Remarks	Revise	Status
4C-SW-125			B-50	A53		4	0.237		IWC-1221(A1)	60	80	8X4 RDCR TO ACA01F SUPPLY.	R 07/98	A
4D-SW-125			B-50A	A53		4	0.237		IWC-1221(A1)	60	80	8X4 RDCR TO RDCG ELL ON ACA01A RETURN.	R 07/98	A
4E-SW-125			B-50A	A53		4	0.237		IWC-1221(A1)	60	80	8X8X4 TEE TO RDCG ELL ON ACA01E RETURN.	R 07/98	A
4F-SW-125			B-50A	A53		4	0.237		IWC-1221(A1)	60	80	8X4 RDCR TO RDCG ELL ON ACA01F RETURN.	R 07/98	A
4G-SW-125			B-51A	A53		4	0.237		IWC-1221(A1)	60	80	8X8X4 TEE TO RDCG ELL ON ACA01B SUPPLY.	R 07/98	A
4H-SW-125			B-51A	A53		4	0.237		IWC-1221(A1)	60	80	8X8X4 TEE TO RDCG ELL ON ACA01G SUPPLY.	R 07/98	A
4I-SW-125			B-51A	A53		4	0.237		IWC-1221(A1)	60	80	8X4 RDCR TO RDCG ELL ON ACA01H SUPPLY.	R 07/98	A
4J-SW-125			B-51B	A53		4	0.237		IWC-1221(A1)	60	80	8X4 RDCR TO RDCG ELL ON ACA01B RETURN.	R 07/98	A
4K-SW-125			B-51B	A53		4	0.237		IWC-1221(A1)	60	80	8X8X4 TEE TO RDCG ELL ON ACA01G RETURN.	R 07/98	A
4L-SW-125			B-51B	A53		4	0.237		IWC-1221(A1)	60	80	8X4 RDCR TO RDCG ELL ON ACA01H RETURN.	R 07/98	A
4M-SW-125			B-52A	A53		4	0.237		IWC-1221(A1)	60	80	8X8X4 TEE TO RDCG ELL ON ACA01C SUPPLY.	R 07/98	A
4N-SW-125			B-52A	A53		4	0.237		IWC-1221(A1)	60	80	8X8X4 TEE TO RDCG ELL ON ACA01J SUPPLY.	R 07/98	A
4O-SW-125			B-52A	A53		4	0.237		IWC-1221(A1)	60	80	8X4 RDCR TO RDCG ELL ON ACA01K SUPPLY.	R 07/98	A
4P-SW-125			B-52B	A53		4	0.237		IWC-1221(A1)	60	80	8X4 RDCR TO RDCG ELL ON ACA01C RETURN.	R 07/98	A
4Q-SW-125			B-52B	A53		4	0.237		IWC-1221(A1)	60	80	8X4 RDCR TO RDCG ELL ON ACA01K RETURN.	R 07/98	A
4R-SW-125			B-53	A53		4	0.237		IWC-1221(A1)	60	80	8X8X4 TEE TO RDCR ON ACA01D SUPPLY.	R 07/98	A
4S-SW-125			B-53	A53		4	0.237		IWC-1221(A1)	60	80	8X8X4 TEE TO RDCR ON ACA01L SUPPLY.	R 07/98	A
4T-SW-125			B-53	A53		4	0.237		IWC-1221(A1)	60	80	8X4 RDCR TO 4X3 RDCR ON ACA01M SUPPLY.	R 07/98	A
4U-SW-125			B-53A	A53		4	0.237		IWC-1221(A1)	60	80	8X4 RDCR TO RDCG ELL ON ACA01D RETURN.	R 07/98	A
4V-SW-125			B-53A	A53		4	0.237		IWC-1221(A1)	60	80	8X8X4 TEE TO RDCG ELL ON ACA01L RETURN.	R 07/98	A
4W-SW-125			B-53A	A53		4	0.237		IWC-1221(A1)	60	80	8X4 RDCR TO RDCG ELL ON ACA01M RETURN.	R 07/98	A
4X-SW-125			B-52B	A53		4	0.237		IWC-1221(A1)	60	80	8X8X4 TEE TO REDUCER ON ACA01J	A 07/98	A

PID No.: 33013-1250-3
Class: 2
System: SERVICE WATER
Comp Type: PIPING

ISI Line #	Gilbert Ln. #	SWR Line	Fig. #	Matrl.	IN?	Size	TK(in.)	Method	ASME Exemption	Po	Temp.	Line Description/Remarks	Revise	Status
6A-SW-125	SW-700,SW-150		B-53	A53	Y	6	0.28		IWC-1222(C)	60	80	RED ELBOW BEFORE & AFTER PEN 312.	R 05/98	A
6B-SW-125	SW-1400		B-52B	A53	Y	6	0.28		IWC-1222(C)	60	80	8" TEE ON 8D-SW-125 TO PEN 315.	R 05/98	A
6C-SW-125	SW-200,SW-150		B-52	A53	Y	6	0.28		IWC-1222(C)	60	80	RED ELBOW IN CONT & OUT CONT AT PEN 320.	R 05/98	A
6D-SW-125	SW-1400,SW-15		B-51C	A53	Y	6	0.28		IWC-1222(C)	60	80	8" TEE BY PEN 311 TO RED ELBOW PEN 311.	R 05/98	A
6E-SW-125	SW-600,SW-150		B-51	A53	Y	6	0.28		IWC-1222(C)	60	80	RED ELBOW BEFORE & AFTER PEN 316.	R 05/98	A
6F-SW-125	SW-1400,SW-20		B-50A	A53	Y	6	0.28		IWC-1222(C)	60	80	8" TEE BY PEN 308 TO 1ST RED ELBOW 308.	R 05/98	A
6G-SW-125	SW-500,SW-150		B-50	A53	Y	6	0.28		IWC-1222(C)	60	80	RED ELBOW PEN 319 IN CONT TO 319 OUT CON	R 05/98	A
6-SW-125	SW-1400		B-53A	A53	Y	6	0.28		IWC-1222(C)	60	80	8" TEE BY PEN 323 TO 1ST RED ELBOW.	R 05/98	A
8A-SW-125	SW-1400		B-53A	A53	Y	8	0.322		IWC-1222(C)	60	80	FM 8X4 RED @4U & 4W TO 6-SW-125 @ PEN323	R 07/98	A
8B-SW-125	SW-700		B-53	A53	Y	8	0.322		IWC-1222(C)	60	80	D RECIRC FAN COOLER TO PEN 312.	R 05/98	A
8C-SW-125	SW-1500		B-53	A53	Y	8	0.322		IWC-1222(C)	60	80	RED ELBOW AFTER PEN 312 TO VALVE 4642.	R 05/98	A
8D-SW-125	SW-1400		B-52B	A53	Y	8	0.322		IWC-1222(C)	60	80	VALVE 4643 TO 8" TEE BEFORE PEN 315.	R 05/98	A
8E-SW-125	SW-100		B-52B	A53	Y	8	0.322		IWC-1222(C)	60	80	RED EL PAST P315 TO C RECIRC FAN COOLER.	R 05/98	A
8F-SW-125	SW-200		B-52	A53	Y	8	0.322		IWC-1222(C)	60	80	RED EL PAST P320 TO C RECIRC FAN COOLER.	R 05/98	A
8G-SW-125	SW-1500		B-52	A53	Y	8	0.322		IWC-1222(C)	60	80	VALVE 4641 TO RED TEE.	R 07/98	A
8H-SW-125	SW-1400		B-51C	A53	Y	8	0.322		IWC-1222(C)	60	80	VALVE 4630 TO 1ST 8" TEE BY PEN 311.	R 05/98	A
8I-SW-125	SW-150		B-51B	A53	Y	8	0.322		IWC-1222(C)	60	80	RED EL BY P311 TO B RECIRC FAN COOLER.	R 05/98	A
8J-SW-125	SW-600		B-51	A53	Y	8	0.322		IWC-1222(C)	60	80	B RECIRC FAN COOLER TO PEN 316.	R 05/98	A
8K-SW-125	SW-1500		B-51	A53	Y	8	0.322		IWC-1222(C)	60	80	RED ELBOW AFTER PEN 316 TO VALVE 4628.	R 05/98	A
8L-SW-125	SW-1400		B-50A	A53	Y	8	0.322		IWC-1222(C)	60	80	VALVE 4629 TO 8" TEE BY PEN 308.	R 05/98	A
8M-SW-125	SW-200		B-50A	A53	Y	8	0.322		IWC-1222(C)	60	80	RED EL BY P308 TO A RECIRC FAN COOLER.	R 05/98	A
8N-SW-125	SW-500		B-50	A53	Y	8	0.322		IWC-1222(C)	60	80	A RECIRC FAN COOLR TO RED EL BEFORE P319	R 05/98	A

PID No.: 33013-1250-3
Class: 2
System: SERVICE WATER
Comp Type: PIPING

ISI Line #	Gilbert Ln. #	SWR Line	Fig. #	Matrl.	IN?	Size	TK(in.)	Method	ASME Exemption	Po	Temp.	Line Description/Remarks	Revise	Status
8O-SW-125	SW-1500		B-50	A53	Y	8	0.322		IWC-1222(C)	60	80	RED ELBOW BY PEN 319 TO VALVE 4627.	R 05/98	A
8-SW-125	SW-1400		B-53A	A53	Y	8	0.322		IWC-1222(C)	60	80	VALVE 4644 TO 8" TEE BY PEN 323 OUT CONT	R 05/98	A

PID No.: 33013-1250-3
Class: 3
System: SERVICE WATER
Comp Type: PIPING

ISI Line #	Gilbert Ln. #	SWR Line	Fig. #	Matrl.	IN?	Size	TK(in.)	Method	ASME Exemption	Po	Temp.	Line Description/Remarks	Revise	Status
10A-SW0-125-1	SW-1400		C-14	A53	?	10	0.375	VT-3	N/A	75	80	8D, 8E TO 14" REDUCER, 14J.	R 05/98	A
10C-SW0-125-1			C-16		?	10	0.375	VT-3	N/A	75	80	16D TO 4614.	R 06/93	A
14EE-SWO-125-1	SW-1400		C-16B	A53	?	14	0.375	VT-3	N/A	75	80	FROM 16D REDUCER TO V4663	A 05/98	A
14J-SW0-125-1	SW-1400		C-14	A53	?	14	0.375	VT-3	N/A	75	80	10A TO 4561, DISCHARGE CANAL.	R 06/93	A
14L-SW0-125-1			C-14		?	14	0.375	VT-3	NO SUPPORTS	75	80	BYPASS FOR 4561 FROM 14J THRU 4562.	R 06/93	A
16DD-SWO-125-1			C-16B	A53	?	16	0.375	VT-3	N/A	75	80	FROM 16D REDUCER TO 14E	A 05/98	A
2.5A-SW0-125-1			C-16	A53	?	2.5	0.203		IWD-1220(A1)	75	80	14E TO 4625, 4626, 16D.	R 05/98	A
2.5B-SW0-125-1			N/A	A53	?	2.5	0.203		IWD-1220(A1)	75	80	2.5A TO 4635, 4757.	R 05/98	A
2.5C-SW0-125-1			N/A	A53	?	2.5	0.203		IWD-1220(A1)	75	80	4636 TO 4I.	R 05/98	A
2.5D-SW0-125-1			N/A	A53	?	2.5	0.203		IWD-1220(A1)	75	80	4758 TO 2.5C.	R 05/98	A
3G-SW0-125-1			C-14	A53	?	3	0.216		IWD-1220(A1)	75	80	4624C TO 14J.	R 05/98	A
4H-SW0-125-1			C-18	A53	?	4	0.237		IWD-1220(A1)	75	80	4651A TO 6B-SW0-125-1.	R 05/98	A
4I-SW0-125-1			C-18	A53	?	4	0.237		IWD-1220(A1)	75	80	4652A TO 6B-SW0-125-1.	R 05/98	A
6B-SW0-125-1	SW-1410		C-18	A53	?	6	0.28	VT-3	N/A	75	80	4H, 4I TO 14J.	R 06/93	A
8A-SW0-125-1	SW-1500		C-16B	A53	?	8	0.322	VT-3	N/A	75	80	14EE TO 4642.	R 05/98	A
8B-SW0-125-1	SW-1500		C-16B	A53	?	8	0.322	VT-3	NO SUPPORTS	75	80	14E TO 4628.	R 06/93	A
8C-SW0-125-1	SW-1500		C-16B	A53	?	8	0.322	VT-3	N/A	75	80	16DD TO 4641.	R 05/98	A
8D-SW0-125-1	SW-1400		C-14	A53	?	8	0.322	VT-3	N/A	75	80	4644 TO 10A.	R 06/93	A
8E-SW0-125-1			C-14	A53	?	8	0.327	VT-3	N/A	75	80	4643 TO 10A.	R 06/93	A
8F-SW0-125-1			C-14	A53	?	8	0.327	VT-3	N/A	75	80	4630 TO 14J.	R 06/93	A
8G-SW0-125-1			C-14	A53	?	8	0.327	VT-3	N/A	75	80	4629 TO 14X14X8 TEE, 14J.	R 06/93	A
8H-SW0-125-1			C-16B	A53	?	8	0.327	VT-3	NO SUPPORTS	75	80	14E TO 4627.	R 06/93	A

PID No.: 33013-1258
Class: 1
System: REACTOR COOLANT-PRESSURIZER
Comp Type: COMPONENTS

ISI Line #	Gilbert Ln. #	SWR Line	Fig. #	Matrl.	IN?	Size	TK(in.)	Method	ASME Exemption	Po	Temp.	Line Description/Remarks	Revise	Status
TRC01			A-4			10	0	VOL	N/A			PRESSURIZER.	R 12/93	A

PID No.: 33013-1258
Class: 1
System: REACTOR COOLANT-PRESSURIZER
Comp Type: PIPING

ISI Line #	Gilbert Ln. #	SWR Line	Fig. #	Matrl.	IN?	Size	TK(in.)	Method	ASME Exemption	Po	Temp.	Line Description/Remarks	Revise	Status
10-RC8-2501	RC-200	10 PRZ SUR	A-3D	A376	Y	10	1	SUR/VOL	N/A			PRZ SURGE LINE TO B HOT LEG.	R 11/91	A
2A-RC8-2501			A-11		?	2	0	SUR	N/A			VALVE 297 TO REDUCER AT 3C-RC8-2501.	A 06/93	A
3A-RC8-2501		3-RC-1005	A-12	A376	Y	3	0.438	SUR	N/A			PRZ RELIEF MANIFOLD TO VALVES 515 & 431C		A
3A-RC8-2501-A	RC-300	3-RC-1000	A-10	A376	Y	3	0.438	SUR	N/A			PRZ SPRAY FROM LOOP A TO 431A.	R 11/91	A
3A-RC8-2501-B	RC-300	3-RC-1001	A-10	A376	Y	3	0.438	SUR	N/A			PRZ SPRAY FROM LOOP B TO 431B.	R 11/91	A
3B-RC8-2501		3-RC-1006	A-12	A376	Y	3	0.438	SUR	N/A			PRZ RELIEF MANIFOLD TO VALVES 516 & 430.		A
3C-RC8-2501	RC-300	3-RC-1000	A-9	A376	Y	3	0.438	SUR	N/A			PRZ SPRAY FROM 431A & B TO PRZ HEAD.		A
4A-RC8-2501-A		4-RC-273	A-13	A376	Y	4	0.531	SUR/VOL	N/A			PRZ RELIEF PRZ TO PCV 434.		A
4A-RC8-2501-B		4-RC-273	A-13	A376	Y	4	0.531	SUR/VOL	N/A			PRZ RELIEF PRZ TO PCV 435.		A
4C-RC8-2501		4-RC-1005	A-12	A376	Y	4	0.531	SUR/VOL	N/A			PRZ RELIEF PRZ TO RELIEF MANIFOLD.		A

PID No.: 33013-1258
Class: 2
System: REACTOR COOLANT-PRESSURIZER
Comp Type: PIPING

ISI Line #	Gilbert Ln. #	SWR Line	Fig. #	Matrl.	IN?	Size	TK(in.)	Method	ASME Exemption	Po	Temp.	Line Description/Remarks	Revise	Status
2A-RC-151			N/A		-	2	0		IWC-1222(A)	60	70	VALVE 529 BY PEN 121 TO VALVE 508.		A

PID No.: 33013-1260
Class: 1
System: REACTOR COOLANT
Comp Type: COMPONENTS

ISI Line #	Gilbert Ln. #	SWR Line	Fig. #	Matrl.	IN?	Size	TK(in.)	Method	ASME Exemption	Po	Temp.	Line Description/Remarks	Revise	Status
EMS01A			A-5			31	0	SUR/VOL	N/A			STEAM GENERATOR A.	R 12/93	A
EMS01B			A-5			31	0	SUR/VOL	N/A			STEAM GENERATOR B.	R 12/93	A
PRC01A			A-7			31	0	SUR/VOL	N/A			REACTOR COOLANT PUMP A - RC.	R 12/93	A
PRC01B			A-7			31	0	SUR/VOL	N/A			REACTOR COOLANT PUMP B - RC.	R 12/93	A
RRC01			A-1			29	0	SUR/VOL	N/A			REACTOR VESSEL.	R 12/93	A

PID No.: 33013-1260
Class: 1
System: REACTOR COOLANT
Comp Type: PIPING

ISI Line #	Gilbert Ln. #	SWR Line	Fig. #	Matrl.	IN?	Size	TK(in.)	Method	ASME Exemption	Po	Temp.	Line Description/Remarks	Revise	Status
10A-RC0-2501-A	RHR-2500	10-AC-1004	A-15	A376	Y	10	1	SUR/VOL	N/A			RHR FROM HOT LEG A TO VALVE 700.	R 11/91	A
10A-RC0-2501-B	SI-200	10-AC-1001	A-14	A376	Y	10	1	SUR/VOL	N/A			RHR/SI FROM 721, 867A TO COLD LEG B.	R 06/93	A
10B-RC0-2501-A			A-17	A376	Y	10	1	SUR/VOL	N/A			SI FROM 867B TO LOOP A COLD LEG.	A 06/93	A
27.5-RC-2501-A		LINE A	A-3	CCSS	Y	27.5	2.4	SUR/VOL	N/A			COLD LEG FROM RCP A TO RPV.		A
27.5-RC-2501-B		LINE B	A-3B	CCSS	Y	27.5	2.4	SUR/VOL	N/A			COLD LEG FROM RCP B TO RPV.		A
29-RC-2501-A		LINE A	A-3	CCSS	Y	29	2.5	SUR/VOL	N/A			HOT LEG FROM RPV TO SG-A.		A
29-RC-2501-B		LINE B	A-3B	CCSS	Y	29	2.5	SUR/VOL	N/A			HOT LEG FROM RPV TO SG B.		A
2A-RC0-2501-A			A-26	A376	Y	2	0.344	SUR	N/A			CHARGING VALVE 383A TO LOOP A COLD LEG.	A 06/93	A
2A-RC0-2501-B		2-DR-1002	A-23A	A376	Y	2	0.344	SUR	N/A			LETDOWN FROM CROSSOVER LEG TO 427, 540.	R 06/93	A
2B-RC0-2501-A		2-LD-1001	A-22	A376	Y	2	0	SUR	N/A			DRAIN FROM CROSS OVER LEG TO 541, 523.	R 06/93	A
2B-RC0-2501-B			A-27	A376	Y	2	0.344	SUR	N/A			CHARGING VALVE 393 TO LOOP B HOT LEG.	A 06/93	A
2C-RC0-2501-A			A-20	A376	Y	2	0	SUR	N/A			SI FROM VALVE 877B TO LOOP A HOT LEG.	A 06/93	A
2C-RC0-2501-B			A-25	A376	Y	2	0.344	SUR	N/A			CHARGING VALVE 295 TO LOOP B COLD LEG.	A 06/93	A
2D-RC0-2501-B			A-21	A376	Y	2	0	SUR	N/A			SI FROM VALVE 877A TO LOOP B HOT LEG.	A 06/93	A
31-RC-2501-A		LINE A	A-3	CCSS	Y	31	2.5	SUR/VOL	N/A			CROSS OVER FROM SG-A TO RCP A.		A
31-RC-2501-B		LINE B	A-3B	CCSS	Y	31	2.5	SUR/VOL	N/A			CROSS OVER FROM SG B TO RCP B.		A
4A-RC0-2501-A	RHR-100	4-AC-1003	A-14	A376	Y	4	0.531	SUR/VOL	N/A			RHR FROM 6X4 REDUCER TO RPV.	R 11/91	A
4A-RC0-2501-B	RHR-100	4-AC-1002	A-18	A376	Y	4	0.531	SUR/VOL	N/A			RHR FROM 6X4 REDUCER TO RPV.	R 11/91	A
6A-RC0-2501-A	RHR-100	6-AC-1003	A-14	A376	Y	6	0.718	SUR/VOL	N/A			RHR FROM VALVE 852A TO 6X4 REDUCER.	R 11/91	A
6A-RC0-2501-B	RHR-100	6-AC-1002	A-18	A376	Y	6	0.718	SUR/VOL	N/A			RHR FROM VALVE 852B TO 6X4 REDUCER.	R 11/91	A

PID No.: 33013-1261
Class: 2
System: CONTAINMENT SPRAY
Comp Type: COMPONENTS

ISI Line #	Gilbert Ln. #	SWR Line	Fig. #	Matrl.	IN?	Size	TK(in.)	Method	ASME Exemption	Po	Temp.	Line Description/Remarks	Revise	Status
EAC11A			N/A			0.5	0		IWC-1222(B)			CONTAINMENT SPRAY PUMP A COOLER.	R 05/98	A
EAC11B			N/A			0.5	0		IWC-1222(B)			CONTAINMENT SPRAY PUMP B COOLER.	R 05/98	A
PSI02A	1261		N/A		-	8	0	VT	NO IWA	205	70	CONTAINMNT SPRAY PMP A,MFG=INGERSOL RAN	R 12/93	A
PSI02B	1261		N/A		-	8	0	VT	NO IWA	205	70	CONTAINMNT SPRAY PMP B,MFG=INGERSOL RAN	R 12/93	A
SSI01	1261		N/A		-	2	0		IWC-1221(A2)			CONTAINMENT SPRAY EDUCTOR A.	R 05/98	A
SSI02	1261		N/A		-	2	0		IWC-1221(A2)			CONTAINMENT SPRAY EDUCTOR B.	R 05/98	A
TSI01	1261		N/A		-	0	0		IWC-1221(C)	30	70	REFUELING WATER STORAGE TANK.	R 05/98	A
TSI02	1261		N/A		-	2	0		IWC-1221(A2)			SPRAY ADDITIVE TANK.	R 05/98	A

PID No.: 33013-1261
Class: 2
System: CONTAINMENT SPRAY
Comp Type: PIPING

ISI Line #	Gilbert Ln. #	SWR Line	Fig. #	Matrl.	IN?	Size	TK(in.)	Method	ASME Exemption	Po	Temp.	Line Description/Remarks	Revise	Status
10BB-SI-151			B-20	A312	-	10	0	SUR/VOL	N/A	410	350	RWST TO VALVE 856.	R 05/98	A
10-SI-151	RHR-450	10-SI-2004	B-19	A312	-	10	0.165	SUR/VOL	N/A	30	70	RWST TO 1ST 10X8 & 10X6 RDCR,825B(HPSI).	R 12/93	A
2A-SI-151			N/A	A312	-	2	0.154		IWC-1221(A1)	30	70	RWST TO VALVE 893B.	R 05/98	A
2B-SI-151			N/A	A312	-	2	0.154		IWC-1221(A1)	30	70	RWST TO VALVE 894B.	R 05/98	A
2C-SI-151			B-20	A312	-	2	0.154		IWC-1221(A1)	30	70	RWST TO VALVE 808.	R 05/98	A
2D-SI-151	CS-520		B-19	A312	-	2	0.154		IWC-1221(A1)	30	70	10-SI-151 TO VALVE 873C.	R 05/98	A
2E-SI-301	CS-100		N/A	A312	N	2	0.154		IWC-1221(A1)	205	70	6G-SI-301 TO 6N-SI-301.	R 05/98	A
2F-SI-301	CS-100		N/A	A312	N	2	0.154		IWC-1221(A1)	205	70	2E-SI-301 TO VALVE 875A.	R 05/98	A
2G-SI-301	CS-100		N/A	A312	N	2	0.154		IWC-1221(A1)	205	70	2E-SI-301 TO VALVE 875B.	R 05/98	A
2H-SI-301	CS-100		N/A	A312	N	2	0.154		IWC-1221(A1)	205	70	2E-SI-301 TO VALVE 876B.	R 05/98	A
2I-SI-301	CS-100		N/A	A312	N	2	0.154		IWC-1221(A1)	205	70	2E-SI-301 TO VALVE 876A.	R 05/98	A
2J-SI-301	CS-510		B-19	A312	-	2	0.154		IWC-1221(A1)	205	70	8B-SI-151 TO CS EDUCTOR.	R 05/98	A
2KK-SI-301	CS-510		N/A	A312	-	2	0.154		IWC-1221(A1)	205	70	CS EDUCTORA TO 2K-SI-301.	R 05/98	A
2K-SI-301	CS-510		B-46	A312	-	2	0.154		IWC-1221(A1)	205	70	6C-SI-301 TO VALVE 859A.	R 05/98	A
2L-SI-301	CS-510		N/A	A312	-	2	0.154		IWC-1221(A1)	205	70	CS EDUCTOR 1 TO CS EDUCTOR 2.	R 05/98	A
2M-SI-301	CS-510		B-19	A312	-	2	0.154		IWC-1221(A1)	205	70	8A-SI-151 TO CS EDUCTOR.	R 05/98	A
2N-SI-301	CS-510		N/A	A312	-	2	0.154		IWC-1221(A1)	205	70	CS EDUCTOR 2 TO 2Q-SI-301.	R 05/98	A
2P-SI-301	CS-510,CS-520		N/A	A312	-	2	0.154		IWC-1221(A1)			2L-SI-301 TO VALVE 873A.	R 05/98	A
2QA-SI-301	CS-520		N/A	A312	-	2	0.154		IWC-1221(A1)			2P-SI-301 BY VALVE 873B TO VALVE 873D.	R 05/98	A
2Q-SI-301	CS-510		B-47	A312	-	2	0.154		IWC-1221(A1)			6J-SI-301 TO VALVE 859A, 859C.	R 05/98	A
2R-SI-301	CS-520		N/A	A312	-	2	0.154		IWC-1221(A1)			2" TEE ON P-SI-151 PAST VALVE.	R 05/98	A
2-SI-151			N/A	A312	-	2	0.154		IWC-1221(A1)	30	70	RWST TO VALVE 893A.	R 05/98	A

PID No.: 33013-1261
Class: 2
System: CONTAINMENT SPRAY
Comp Type: PIPING

ISI Line #	Gilbert Ln. #	SWR Line	Fig. #	Matrl.	IN?	Size	TK(in.)	Method	ASME Exemption	Po	Temp.	Line Description/Remarks	Revise	Status
2S-SI-301	CS-520		N/A	A312	-	2	0.154		IWC-1221(A1)			2P-SI-301 PAST VALVE 836B TO 1ST 2" TEE.	R 05/98	A
2T-SI-301	CS-520		N/A	A312	-	2	0.154		IWC-1221(A1)			VALVE 881B TO SPRAY ADDITIVE TANK.	R 05/98	A
2U-SI-151			N/A	A312		2	0		IWC-1221(A1)			RWST TO VALVE 895.	A 05/98	A
3A-SI-301	CS-150		N/A	A312	N	3	0.216		IWC-1221(A1)	205	70	4B-SI-301 TO 4C-SI-301.	R 05/98	A
3B-SI-301	CS-250		N/A	A312	N	3	0.216		IWC-1221(A1)	205	70	4X3 RDCR ON 4E-SI-301 TO 4X3 RDCR.	R 05/98	A
3C-SI-301			N/A	A312	-	3	0.216		IWC-1221(A1)			SPRAY ADDITIVE TANK TO VALVE 627.	R 05/98	A
3-SI-151			N/A	A312	-	3	0.216		IWC-1221(A1)	30	70	RWST TO NOZZLE WELD.	R 05/98	A
4A-SI-301	CS-500		B-46	A312	-	4	0.281		IWC-1221(A1)	205	70	A CS PUMP TO REDUCER.	R 05/98	A
4B-SI-301	CS-150		N/A	A312	N	4	0.237		IWC-1221(A1)	205	70	6H-SI-301 TO 3A-SI-301.	R 05/98	A
4C-SI-301	CS-150		N/A	A312	N	4	0.237		IWC-1221(A1)	205	70	3A-SI-301 TO 6I-SI-301.	R 05/98	A
4D-SI-301	CS-800		B-47	A312	-	4	0.237		IWC-1221(A1)	205	70	B CS PUMP TO REDUCER.	R 05/98	A
4E-SI-301	CS-250		N/A	A312	N	4	0.237		IWC-1221(A1)	205	70	6X4 RDCR TO 3B-SI-301.	R 05/98	A
4F-SI-301	CS-250		N/A	A312	N	4	0.237		IWC-1221(A1)	205	70	4X3 RDCR TO 6X4 RDCR ON 6P-SI-301.	R 05/98	A
6A-SI-151	RHR-450	6-SI-151R	B-19	A312	-	6	0.148	SUR/VOL	N/A	30	70	10-SI-151 TO RDCR PAST VALVE 858B.	R 11/91	A
6B-SI-151	RHR-450	10-SI-151R	B-19	A312	-	6	0.148	SUR/VOL	N/A	30	70	10-SI-151 TO RDCR PAST VALVE 858A.	R 11/91	A
6C-SI-301	CS-500		B-46	A403	-	6	0.28	SUR/VOL	N/A	205	70	4A-SI-301 TO 1ST 6X6X6 TEE.	R 11/91	A
6DD-SI-301	CS-500		B-46	A403	-	6	0.28		IWC-1221(D)	205	70	VALVE 860A TO 1ST 6" TEE BEFORE V 862A.	R 05/98	A
6D-SI-301	CS-500		B-46	A403	-	6	0.28	SUR/VOL	N/A	205	70	6C-SI-301 TO VALVE 860A.		A
6EE-SI-301	CS-500		B-46	A403	-	6	0.28		IWC-1221(D)	205	70	VALVE 860B TO VALVE 862A.	R 05/98	A
6E-SI-301	CS-500		B-46	A403	-	6	0.28	SUR/VOL	N/A	205	70	1ST TEE ON LINE 6C-SI-301 TO VALVE 860B.		A
6F-SI-301	CS-500		B-46	A403	-	6	0.28		IWC-1221(D)	205	70	VALVE 862A TO PEN 105.	R 05/98	A
6G-SI-301	CS-100,CS-150		B-48	A312	N	6	0.281		IWC-1221(D)	205	70	PEN 105 TO CS SPRAY RING.	R 05/98	A

PID No.: 33013-1261
Class: 2
System: CONTAINMENT SPRAY
Comp Type: PIPING

ISI Line #	Gilbert Ln. #	SWR Line	Fig. #	Matrl.	IN?	Size	TK(in.)	Method	ASME Exemption	Po	Temp.	Line Description/Remarks	Revise	Status
6H-SI-301	CS-150		N/A	A312	N	6	0.281		IWC-1221(D)	205	70	6G-SI-301 TO 4B-SI-301.	R 05/98	A
6I-SI-301	CS-150		N/A	A312	N	6	0.281		IWC-1221(D)	205	70	4C-SI-301 TO 6G-SI-301.	R 05/98	A
6J-SI-301	CS-800		B-47	A403	-	6	0.28	SUR/VOL	N/A	205	70	4D-SI-301 TO 1ST 6X6X6 TEE.		A
6KK-SI-301	CS-800		B-47	A403	-	6	0.28		IWC-1221(D)	205	70	VALVE 860D TO 6" TEE BEFORE VALVE 862B.	R 05/98	A
6K-SI-301	CS-800		B-47	A403	-	6	0.28	SUR/VOL	N/A	205	70	6X6X6 TEE ON 6J-SI-301 TO VALVE 860D.		A
6LL-SI-301	CS-800		B-47	A403	-	6	0.28		IWC-1221(D)	205	70	VALVE 860C TO 6" TEE BEFORE VALVE 862B.	R 05/98	A
6L-SI-301	CS-800		B-47	A403	-	6	0.28	SUR/VOL	N/A	205	70	6X6X6 TEE ON 6J-SI-301 TO VALVE 860C.		A
6M-SI-301	CS-800		B-47	A403	-	6	0.28		IWC-1221(D)	205	70	6X6X6 TEE BEFORE VALVE 862B TO PEN 109.	R 05/98	A
6N-SI-301	CS-200,CS-250		N/A	A312	N	6	0.28		IWC-1221(D)	205	70	PEN 109 TO 6" TEE ON LOWER CS RING.	R 05/98	A
6P-SI-301	CS-250		N/A	A312	N	6	0.281		IWC-1221(D)	205	70	4F-SI-301 TO 6N-SI-301.	R 05/98	A
6Q-SI-301	CS-250		N/A	A312	N	6	0.281		IWC-1221(D)	205	70	6N-SI-301 TO 4E-SI-301.	R 05/98	A
8A-SI-151	RHR-450		B-19	A312	-	8	0.148	SUR/VOL	N/A	30	70	6A-SI-151 TO CS PUMP B.	R 11/91	A
8B-SI-151	RHR-450	10-SI-151R	B-19	A312	-	8	0.148	SUR/VOL	N/A	30	70	6B-SI-151 TO CS PUMP A.	R 11/91	A

PID No.: 33013-1262-1
Class: 2
System: SAFETY INJECTION
Comp Type: COMPONENTS

ISI Line #	Gilbert Ln. #	SWR Line	Fig. #	Matrl.	IN?	Size	TK(in.)	Method	ASME Exemption	Po	Temp.	Line Description/Remarks	Revise	Status
EAC08A			N/A			0.5	0		IWC-1222(B)			SAFETY INJECTION PUMP A COOLER A.	R 05/98	A
EAC08B			N/A			0.5	0		IWC-1222(B)			SAFETY INJECTION PUMP A COOLER B.	R 05/98	A
EAC09A			N/A			0.5	0		IWC-1222(B)			SAFETY INJECTION PUMP B COOLER A.	R 05/98	A
EAC09B			N/A			0.5	0		IWC-1222(B)			SAFETY INJECTION PUMP B COOLER B.	R 05/98	A
EAC10A			N/A			0.5	0		IWC-1222(B)			SAFETY INJECTION PUMP C COOLER A.	R 05/98	A
EAC10B			N/A			0.5	0		IWC-1222(B)			SAFETY INJECTION PUMP C COOLER B.	R 05/98	A
PSI01A	1262		N/A		-	4	0	VT	NO IWA	155	200	SAFETY INJECTION PUMP A, MFG=WORTHINGTON	R 12/93	A
PSI01B	1262		N/A		-	4	0	VT	NO IWA	155	200	SAFETY INJECTION PUMP B, MFG=WORTHINGTON	R 12/93	A
PSI01C	1262		N/A		-	4	0	VT	NO IWA	155	200	SAFETY INJECTION PUMP C, MFG=WORTHINGTON	R 12/93	A

PID No.: 33013-1262-1
Class: 2
System: SAFETY INJECTION
Comp Type: PIPING

ISI Line #	Gilbert Ln. #	SWR Line	Fig. #	Matrl.	IN?	Size	TK(in.)	Method	ASME Exemption	Po	Temp.	Line Description/Remarks	Revise	Status
1.5A-SI-1501	SI-300		B-37	A312	-	1.5	0		IWC-1221(B1)	155	200	2E-SI-1501 TO 3A-SI-1501.	R 05/98	A
1.5C-SI-1501	SI-300		B-54	A312	-	1.5	0		IWC-1221(B1)	155	200	3B-SI-1501 TO 2E-SI-1501.	R 05/98	A
1.5D-SI-1501	SI-300		B-42	A312	-	1.5	0		IWC-1221(B1)	155	200	3E-SI-1501 TO 2E-SI-1501.	R 05/98	A
2E-SI-1501			B-54	A312		2	0	SUR	N/A			SI PUMPS DISG RDCRS TO VALVES 898 & 897.	R 06/93	A
3A-SI-1501	SI-300		B-37	A312	-	3	0.3	SUR/VOL	N/A	155	200	SI PUMP A TO 4X3 RDCR AFTER VALVE 888A.	R 06/93	A
3B-SI-1501	SI-300		B-40	A312	-	3	0.3	SUR/VOL	N/A	155	200	SI PUMP C PAST FLANGE TO 3" TEE.	R 06/93	A
3C-SI-1501	SI-300		B-41	A312	-	3	0.3	SUR/VOL	N/A	155	200	3" TEE FROM 3B T0 871A, 870A, & 4D.	R 06/93	A
3D-SI-1501	SI-300		B-41	A312	-	3	0.3	SUR/VOL	N/A	155	200	3" TEE FROM 3B TO 871B, 870B, & 4E.	R 06/93	A
3E-SI-1501	SI-300		B-42	A312	-	3	0.3	SUR/VOL	N/A	155	200	SI PUMP B TO 4X3 RDCR AFTER VALVE 888B.	R 06/93	A
4A-SI-301	RHR-450		B-16B	A312	Y	4	0.237	SUR/VOL	N/A	200	200	8H-SI-301 TO SI PUMP SUCTION B.	R 12/93	A
4B-SI-301	RHR-450		B-16B	A312	Y	4	0.237	SUR/VOL	N/A	200	200	8G-SI-301 TO SI PUMP SUCTION C.	R 12/93	A
4C-SI-301	RHR-450		B-16B	A312	Y	4	0.237	SUR/VOL	N/A	200	200	4B-SI-301 TO 1816A.	R 12/93	A
4D-SI-1501	SI-300,SI-210		B-37	A312	N	4	0.337	SUR/VOL	N/A	155	200	3A-SI-1501 THRU PEN 113 TO 4X4X3 TEE.	R 06/93	A
4E-SI-1501	SI-300,SI-110		B-42	A312	-	4	0.337	SUR/VOL	N/A	155	200	3E-SI-1501 THRU PEN 101 TO 4X4X3 TEE.	R 06/93	A
4-SI-301	RHR-450		B-16B	A312	Y	4	0.237	SUR/VOL	N/A	200	200	8F-SI-301 TO SI PUMP SUCTION A.	R 12/93	A
8C-SI-301	SI-400,8-SI-301	8-SI-2001	B-15	A312	Y	8	0.322	SUR/VOL	N/A	200	200	8A/8B-SI-301 TO 1ST 8" TEE.	R 06/93	A
8D-SI-301	SI-400,SI-301	8-SI-2003	B-16	A312	Y	8	0.322	SUR/VOL	N/A	200	200	8C-SI-301 TO TEE PAST VALVE 826B.	R 06/93	A
8E-SI-301	SI-400,8-SI-301	8-SI-2002	B-16	A312	Y	8	0.322	SUR/VOL	N/A	200	200	8C-SI-301 TO 1ST TEE PAST VALVE 826D.	R 06/93	A
8F-SI-301	SI-400,RHR-450	8-SI-2003	B-16A	A312	Y	8	0.322	SUR/VOL	N/A	200	200	8D/8E-SI-301 TO 1ST 8X4 RDCR.	R 06/93	A
8G-SI-301	RHR-450		B-19	A312	Y	8	0.322	SUR/VOL	N/A	200	200	8F-SI-301 TO VALVE 825A.	R 06/93	A
8H-SI-301	RHR-450		B-16	A312	-	8	0.322	SUR/VOL	N/A	200	200	8F-SI-301 TO VALVE 825B.	R 06/93	A
8J-SI-151			B-19	A312		8	0.322	SUR/VOL	N/A			VALVE 825B TO 10-SI-151.	R 05/98	A

PID No.: 33013-1262-1
Class: 2
System: SAFETY INJECTION
Comp Type: PIPING

ISI Line #	Gilbert Ln. #	SWR Line	Fig. #	Matrl.	IN?	Size	TK(in.)	Method	ASME Exemption	Po	Temp.	Line Description/Remarks	Revise	Status
81.-SI-151			B-19	A312		8	0.322	SUR/VOL	N/A			VALVE 825A TO 10-SI-151.	R 05/98	A

PID No.: 33013-1262-2
Class: 1
System: SAFETY INJECTION
Comp Type: PIPING

ISI Line #	Gilbert Ln. #	SWR Line	Fig. #	Matrl.	IN?	Size	TK(in.)	Method	ASME Exemption	Po	Temp.	Line Description/Remarks	Revise	Status
10A-SI2-2501-A	SI-100	10-SI-1005	A-17	A376	Y	10	1	SUR/VOL	N/A			CHECK VALVE 842B TO 867B.	R 06/93	A
10A-SI2-2501-B	SI-200	10-SI-1004	A-16	A376	Y	10	1	SUR/VOL	N/A			CHECK VALVE 842A TO 867A.	R 06/93	A
2A-SI2-2501	SI-110	2-SI-1001	A-19	A376	Y	2	0.344	SUR	N/A			878J TO 10" SI ACCUM B DUMP.	R 06/93	A
2B-SI2-2501	SI-210	2-SI-1002	A-21	A376	Y	2	0.344	SUR	N/A			VALVE 878F TO 877A.	R 06/93	A
2C-SI2-2501	SI-110,-111	2-SI-1001	A-20	A376	Y	2	0.344	SUR	N/A			VALVE 878H TO 877B.	R 06/93	A
2D-SI2-2501	SI-210	2-SI-1002	A-16	A376	Y	2	0.344	SUR	N/A			878G TO 10" SI ACCUM A DUMP.	R 06/93	A

PID No.: 33013-1262-2
Class: 2
System: SAFETY INJECTION
Comp Type: COMPONENTS

ISI Line #	Gilbert Ln. #	SWR Line	Fig. #	Matrl.	IN?	Size	TK(in.)	Method	ASME Exemption	Po	Temp.	Line Description/Remarks	Revise	Status
TSI03A	1262		N/A		-	0	0		IWC-1221(C)	740	80	SAFETY INJECTION ACCUMULATOR A.	R 05/98	A
TSI03B	1262		N/A		-	0	0		IWC-1221(C)	740	80	SAFETY INJECTION ACCUMULATOR B.	R 05/98	A

PID No.: 33013-1262-2
Class: 2
System: SAFETY INJECTION
Comp Type: PIPING

ISI Line #	Gilbert Ln. #	SWR Line	Fig. #	Matrl.	IN?	Size	TK(in.)	Method	ASME Exemption	Po	Temp.	Line Description/Remarks	Revise	Status
10A-SI-902	SIS-200		N/A	A376	-	10	1		IWC-1221(C)	740	80	ACCUMULATOR A (TS103A) TO VALVE 841.	R 05/98	A
10B-SI-902	SIS-200		N/A	A376	-	10	1		IWC-1221(C)	740	80	10A-SI-902 TO CAP ON TEE.	R 05/98	A
10C-SI-2501	SIS-200		N/A	A376	-	10	1		IWC-1221(C)	740	80	VALVE 841 TO 842A INCLD CAP ON TEE.	R 05/98	A
10D-SI-902	SI-100		N/A	A376	Y	10	1		IWC-1221(C)	740	80	ACCUMULATOR B (TS103B) TO VALVE 865.	R 05/98	A
10E-SI-902	SI-100		N/A	A376	-	10	1		IWC-1221(C)	740	80	10D-SI-902 TO TEE CAP.	R 05/98	A
10F-SI-2501	SI-100		N/A	A376	-	10	1		IWC-1221(C)	740	80	VALVE 865 TO 842B INCLD CAP ON TEE.	R 05/98	A
2A-SI-1501	SI-210		B-39	A312	N	2	0.218	SUR	N/A	155	200	4D-SI-1501 TO VALVE 878A.	R 06/93	A
2B-SI-1501	SI-210		B-39	A376	N	2	0.218	SUR	N/A	155	200	4D-SI-1501 TO VALVE 878B.	R 06/93	A
2C-SI-1501	SI-110		B-45	A376	Y	2	0.343	SUR	N/A	155	200	4" TEE ON 4E-SI-1501 TO VALVE 878D.	R 06/93	A
2D-SI-1501	SI-110		B-44	A312	Y	2	0.218	SUR	N/A	155	200	4" TEE ON 4E-SI-1501 TO VALVE 878C.	R 06/93	A
2G-SI-902	SIS-200		N/A	A312	-	2	0.343		IWC-1221(C)	740	80	10A-SI-902 TO VALVE 844A.	R 05/98	A
2H-SI-902	SI-101		N/A	A312	-	2	0.154		IWC-1221(C)	740	80	10D-SI-902 TO VALVE 844B.	R 05/98	A
2I-SI-902			N/A	A312	-	2	0.154		IWC-1221(C)	740	80	ACCUMULATOR A PAST V 833A TO LT 939.	R 05/98	A
2J-SI-902			N/A	A312	-	2	0.154		IWC-1221(C)	740	80	LT 939 PAST V 833B TO ACCUMULATOR A.	R 05/98	A
2K-SI-902			N/A	A312	-	2	0.154		IWC-1221(C)	740	80	ACCUMULATOR A PAST V 832A TO LT 938.	R 05/98	A
2L-SI-902			N/A	A312	-	2	0.154		IWC-1221(C)	740	80	LT 938 PAST V 832B TO ACCUMULATOR A.	R 05/98	A
2M-SI-902			N/A	A312	-	2	0.154		IWC-1221(C)	740	80	ACCUMULATOR B PAST V 837A TO LT 934.	R 05/98	A
2N-SI-902			N/A	A312	-	2	0.154		IWC-1221(C)	740	80	LT 934 PAST V 837B TO ACCUMULATOR B.	R 05/98	A
2P-SI-902			N/A	A312	-	2	0.154		IWC-1221(C)	740	80	ACCUMULATOR B PAST V 838A TO LT 935.	R 05/98	A
2Q-SI-902			N/A	A312	-	2	0.154		IWC-1221(C)	740	80	LT 935 PAST V 838B TO ACCUMULATOR B.	R 05/98	A
2R-SI-2501			B-45			2	0	SUR	N/A			VALVE 878D TO VALVE 878J.	R 06/93	A
2S-SI-2501			B-44			2	0	SUR	N/A			VALVE 878C TO VALVE 878H.	R 06/93	A

PID No.: 33013-1262-2
Class: 2
System: SAFETY INJECTION
Comp Type: PIPING

ISI Line #	Gilbert Ln. #	SWR Line	Fig. #	Matrl.	IN?	Size	TK(in.)	Method	ASME Exemption	Po	Temp.	Line Description/Remarks	Revise	Status
2T-SI-2501			B-39			2	0	SUR	N/A			VALVE 878B TO VALVE 878G.	R 06/93	A
2U-SI-2501			B-39			2	0	SUR	N/A			VALVE 878A TO VALVE 878F.	R 05/98	A
2V-SI-902			N/A			2	0		IWC-1221(C)			DRAIN OFF 2G-SI-902.	R 05/98	A
2W-SI-902			N/A			2	0		IWC-1221(C)			DRAIN OFF 2H-SI-902.	R 05/98	A

PID No.: 33013-1263
Class: 3
System: RCS OVERPRESS. PROT. N2 ACCUM.
Comp Type: COMPONENTS

ISI Line #	Gilbert Ln. #	SWR Line	Fig. #	Matrl.	IN?	Size	TK(in.)	Method	ASME Exemption	Po	Temp.	Line Description/Remarks	Revise	Status
TRC03A			N/A			1	0		IWD-1220(A2)			OVERPRESSURE PROTECTION ACCUMULATOR A.	R 05/98	A
TRC03B			N/A			1	0		IWD-1220(A2)			OVERPRESSURE PROTECTION ACCUMULATOR B.	R 05/98	A
TRC04A			N/A			1	0		IWD-1220(A2)			OVERPRESSURE PROTECTION N2 SURGE TANK A.	R 05/98	A
TRC04B			N/A			1	0		IWD-1220(A2)			OVERPRESSURE PROTECTION N2 SURGE TANK B.	R 05/98	A

PID No.: 33013-1264
Class: 1
System: CVCS-LETDOWN
Comp Type: COMPONENTS

ISI Line #	Gilbert Ln. #	SWR Line	Fig. #	Matrl.	IN?	Size	TK(in.)	Method	ASME Exemption	Po	Temp.	Line Description/Remarks	Revise	Status
ECH02A			A-8		-	2	0	VOL	N/A			REGENERATIVE HEAT EXCHANGER A.	R 12/93	A
ECH02B			A-8		-	2	0	VOL	N/A			REGENERATIVE HEAT EXCHANGER B.	R 12/93	A
ECH02C			A-8		-	2	0	VOL	N/A			REGENERATIVE HEAT EXCHANGER C.	R 12/93	A
ECH03			N/A			0.75	0		IWB-1220(B2)			EXCESS LETDOWN HEAT EXCHANGER.	R 12/98	A

PID No.: 33013-1264
Class: 1
System: CVCS-LETDOWN
Comp Type: PIPING

ISI Line #	Gilbert Ln. #	SWR Line	Fig. #	Matrl.	IN?	Size	TK(in.)	Method	ASME Exemption	Po	Temp.	Line Description/Remarks	Revise	Status
2A-CH4-2501	CVC-730	2-LD-1002	A-23	A376	Y	2	0.344	SUR	N/A			CVCS LETDOWN FROM 427 TO 2204,THRU RHE'S	R 05/98	A
2B-CH4-2501		2-LD-1003	A-24	A376	Y	2	0.344	SUR	N/A			RHE'S TO 200A, 200B, 202.	R 05/98	A

PID No.: 33013-1264
Class: 2
System: CVCS-LETDOWN
Comp Type: PIPING

ISI Line #	Gilbert Ln. #	SWR Line	Fig. #	Matrl.	IN?	Size	TK(in.)	Method	ASME Exemption	Po	Temp.	Line Description/Remarks	Revise	Status
2A-CH-601	CVC-105		N/A	A312	Y	2	0.154		IWC-1222(A)	250	350	VALVE 200A TO 1ST 2X2X2 TEE.		A
2B-CH-601	CVC-105		N/A	A312	Y	2	0.154		IWC-1222(A)	250	350	VALVE 200B TO 1ST 2" TEE ON 2A-CH-601.		A
2C-CH-601	CVC-105		B-32	A312	Y	2	0.154		IWC-1222(A)	250	350	2" TEE ON 2A-CH-601 TO 2G-CH-601.	R 06/93	A
2D-CH-601	CVC-105		N/A	A312	Y	2	0.154		IWC-1222(A)	250	350	VALVE 202 TO LINE 2C-CH-601.		A
2E-CH-601	CVC-105		B-32	A312	Y	2	0.154		IWC-1222(A)	250	350	2C-CH-601 TO VALVE 203.		A
2F-CH-601	CVC-100		N/A	A312	Y	2	0.154		IWC-1222(A)	250	350	2F-AC-601 TO 2" TEE PAST VALVE HCV-133.	R 11/91	A
2G-CH-601	CVC-100		B-32	A312	Y	2	0.154		IWC-1222(A)	250	350	2" TEE ON 2C-CH-601 TO PEN 112, VLV 371.	R 06/93	A

PID No.: 33013-1265-1
Class: 1
System: CVCS-CHARGING
Comp Type: COMPONENTS

ISI Line #	Gilbert Ln. #	SWR Line	Fig. #	Matrl.	IN?	Size	TK(in.)	Method	ASME Exemption	Po	Temp.	Line Description/Remarks	Revise	Status
PRC01A			A-7			1.5	0	SUR/VOL	N/A			REACTOR COOLANT PUMP A - CHRG.	R 12/93	A
PRC01B			A-7			1.5	0	SUR/VOL	N/A			REACTOR COOLANT PUMP B - CHRG.	R 12/93	A

PID No.: 33013-1265-1
Class: 1
System: CVCS-CHARGING
Comp Type: PIPING

ISI Line #	Gilbert Ln. #	SWR Line	Fig. #	Matrl.	IN?	Size	TK(in.)	Method	ASME Exemption	Po	Temp.	Line Description/Remarks	Revise	Status
2A-CH5-2501	CVC-700;-701	2-ACH-1002	A-27	A376	Y	2	0.344	SUR	N/A			CVCS ALT CHARGING FROM 9315 TO 393.	R 06/93	A
2B-CH5-2501			A-25	A376	Y	2	0.344	SUR	N/A			CVCS CHARGING FROM 9314 TO 295.	R 06/93	A
2C-CH5-2502	CVC-400;-401	2-ACH-1001	A-26	A376	Y	2	0.344	SUR	N/A			CVCS ALT CHARG FROM 392B TO 383A.	R 06/93	A
2-CH5-2501	RC-300;CVC-70	2-AS-1001	A-11	A376	Y	2	0.344	SUR	N/A			CVCS AUX SPRAY FROM 9313 TO 297.	R 06/93	A
2H-CH5-2501			A-32			2	0.344	SUR	N/A			VALVE 302C TO RCP-B.	A 06/93	A
2H-CH5-2502			A-32A			2	0.344	SUR	N/A			VALVE 304B TO VALVE 302C.	A 06/93	A
2I-CH5-2501			A-31			2	0.344	SUR	N/A			VALVE 302D TO RCP-A.	A 06/93	A
2I-CH5-2502			A-31A			2	0.344	SUR	N/A			VALVE 304A TO VALVE 302D.	A 06/93	A

PID No.: 33013-1265-1
Class: 2
System: CVCS-CHARGING
Comp Type: COMPONENTS

ISI Line #	Gilbert Ln. #	SWR Line	Fig. #	Matrl.	IN?	Size	TK(in.)	Method	ASME Exemption	Po	Temp.	Line Description/Remarks	Revise	Status
ECH02A			A-8		-	2	0		IWC-1222(B)	230	525	REGENERATIVE HEAT EXCHANGER A.	R 05/98	A
ECH02B			A-8		-	2	0		IWC-1222(B)	230	525	REGENERATIVE HEAT EXCHANGER B.	R 05/98	A
ECH02C			A-8			2	0		IWC-1222(B)	230	525	REGENERATIVE HEAT EXCHANGER C.	R 05/98	A
FCH08	1265		B-7		-	2	0		IWC-1222(B)	245	100	SEAL INJECTION FILTER A.	R 05/98	A
FCH09	1265		B-7		-	2	0		IWC-1222(B)	245	1007	SEAL INJECTION FILTER B.	R 05/98	A

PID No.: 33013-1265-1
Class: 2
System: CVCS-CHARGING
Comp Type: PIPING

ISI Line #	Gilbert Ln. #	SWR Line	Fig. #	Matrl.	IN?	Size	TK(in.)	Method	ASME Exemption	Po	Temp.	Line Description/Remarks	Revise	Status
2AA-CH-2502	CVC-600,CVC-6		A-31A	A312	Y	2	0.344		IWC-1222(A)	245	100	PEN 106 TO VALVE 304A.	R 06/93	A
2AB-CH-2502	CVC-500,CVC-5		A-32A	A312	Y	2	0.344		IWC-1222(A)	245	100	PEN 110 TO VALVE 304B.	R 06/93	A
2AV-CH-151	CVC-200		N/A	A312	Y	2	0.109		IWC-1222(A)	140	40	3R-CH-151 TO VALVES 362A & 385A.	R 06/93	A
2D-CH5-2501			A-29			2	0		IWC-1222(A)			REGEN HEAT EXCHANGER TO VALVE 9314.	R 06/93	A
2E-CH5-2501			A-11			2	0		IWC-1222(A)			2D-CH5-2501 TO VALVE 9313.	R 06/93	A
2F-CH5-2501			A-27			2	0		IWC-1222(A)			2D-CH5-2501 TO VALVE 9315.	R 06/93	A
2G-CH5-2502			A-30			2	0		IWC-1222(A)			REGEN HE'S TO VALVE 370B.	R 06/93	A
2H-CH-2502	CVC-1100		N/A	A312	Y	2	0.343		IWC-1222(A)	245	100	3Q-CH-2502 PAST VALVE 323 TO PEN 102.	R 06/93	A
2I-CH-2502	CVC-1100		N/A	A312	Y	2	0.344		IWC-1222(A)	245	100	2" RDCR TEE ON 3R-CH-2502 TO PEN 110.	R 06/93	A
2J-CH-2502	CVC-1100		N/A	A312	Y	2	0.344		IWC-1222(A)	245	100	2" RDCR TEE 3R-CH-2502 TO PEN 106.	R 06/93	A
2K-CH-2502	CVC-1100		N/A	A312	Y	2	0.344		IWC-1222(A)	245	100	2" TEE ON 3N-CH-2502 TO FCH09.	R 06/93	A
2L-CH-2502	CVC-1100		N/A	A312	Y	2	0.344		IWC-1222(A)	245	100	2K-CH-2502 PAST VALVE 303B TO SW FIL 2.	R 06/93	A
2M-CH-2502	CVC-1100		N/A	A312	Y	2	0.344		IWC-1222(A)	245	100	2" TEE ON 3Q-CH-2502 TO FCH09.	R 06/93	A
2N-CH-2502	CVC-1100		N/A	A312	Y	2	0.344		IWC-1222(A)	245	100	2M-CH-2502 PAST VALVE 303A TO FCH08.	R 06/93	A
2P-CH-2501			B-34			2	0		IWC-1222(A)			2AV-CH-151 TO RC PUMP A.	R 06/93	A
2T-CH-151	CVC-200		SS-1	A312	Y	2	0.109		IWC-1222(A)	140	40	3R-CH-151 TO VALVE 314.	R 06/93	A
2V-CH-151	CVC-200		N/A	A312	Y	2	0.109		IWC-1222(A)	140	40	2AV-CH-151 TO 2X.75 RDCR.	R 06/93	A
2W-CH-151	CVC-200		SS-1	A312	Y	2	0.109		IWC-1222(A)	140	40	3" RDCR ON 3R-CH-151 TO VALVE 362B.	R 06/93	A
2X-CH-2501	CVC-700		S-3	A376	Y	2	0.344		IWC-1222(A)	140	40	VALVE 362B PAST VALVE 270B TO RC PMP 1B.	R 06/93	A
2Z-CH-2502	CVC-400,CVC-4		N/A	A312	Y	2	0.344		IWC-1222(A)	245	100	PEN 102 TO VALVE 392B.	R 06/93	A
3Q-CH-2502	CVC-1100		N/A	A312	Y	3	0.438		IWC-1222(A)	245	100	2" TEE ON 3N-CH-2502 PAST VALVE 275.	R 06/93	A
3R-CH-151	CVC-200		N/A	A312	Y	3	0.12		IWC-1222(A)	140	40	PEN 108 TO 3X2 REDUCER.	R 06/93	A

PID No.: 33013-1265-1
Class: 2
System: CVCS-CHARGING
Comp Type: PIPING

ISI Line #	Gilbert Ln. #	SWR Line	Fig. #	Matrl.	IN?	Size	TK(in.)	Method	ASME Exemption	Po	Temp.	Line Description/Remarks	Revise	Status
3R-CH-2502	CVC-1100		N/A	A312	Y	3	0.438		IWC-1222(A)	245	100	2" TEE ON 3Q-CH-2502 TO 1ST 2" RDCR TEE.	R 06/93	A

PID No.: 33013-1265-2
Class: 2
System: CVCS-CHARGING
Comp Type: COMPONENTS

ISI Line #	Gilbert Ln. #	SWR Line	Fig. #	Matrl.	IN?	Size	TK(in.)	Method	ASME Exemption	Po	Temp.	Line Description/Remarks	Revise	Status
PCH01A	1265		N/A		-	3	0		IWC-1222(B)	245	100	CHARGING PUMP A, MFG=AJAX.	R 05/98	A
PCH01B	1265		N/A		-	3	0		IWC-1222(B)	245	100	CHARGING PUMP B, MFG=AJAX.	R 05/98	A
PCH01C	1265		N/A		-	3	0		IWC-1222(B)	245	100	CHARGING PUMP C, MFG=AJAX.	R 05/98	A

PID No.: 33013-1265-2
Class: 2
System: CVCS-CHARGING
Comp Type: PIPING

ISI Line #	Gilbert Ln. #	SWR Line	Fig. #	Matrl.	IN?	Size	TK(in.)	Method	ASME Exemption	Po	Temp.	Line Description/Remarks	Revise	Status
2F-CH-2502	CVC-800		N/A	A312	Y	2	0.344		IWC-1222(A)	245	100	PULSE DAMPER TO CHECK VALVE 370B.	R 06/93	A
2G-CH-2502	CVC-800		N/A	A312	Y	2	0.344		IWC-1222(A)	245	100	2F-CH-2502 THRU 384C TO DAMPER.	R 06/93	A
3G-CH-151	CVC-1000		N/A	A312	-	3	0.12		IWC-1222(A)	40	140	VALVE 313 TO PEN 108.	R 06/93	A
3K-CH-2502	CVC-851		B-6	A312	-	3	0.437		IWC-1222(A)	245	100	CHG PUMP 1 DISCHG PAST VALVE 287 TO TEE.	R 06/93	A
3L-CH-2502	CVC-852		B-6	A312	-	3	0.437		IWC-1222(A)	245	100	CHG PUMP 2 DISCHG PAST VALVE 288 TO TEE.	R 06/93	A
3M-CH-2502	CVC-853		B-6	A312	-	3	0.437		IWC-1222(A)	245	100	CHG PUMP 3 DISCHG PAST VALVE 291 TO TEE.	R 06/93	A
3N-CH-2502	CVC-1000		N/A	A312	Y	3	0.438		IWC-1222(A)	245	100	PULSE DAMPENER PAST VALVE 289 TO 1ST TEE	R 06/93	A
3P-CH-2502			N/A	A312	Y	3	0.438		IWC-1222(A)	245	100	PULSE DAMPENER PAST VALVE 290 PUL DAMP.	R 06/93	A
4-CH-151	CVC-1200		N/A	A312	-	4	0.12		IWC-1221(A)	30	100	4B-CH-151 PAST VALVE 357 TO RWST.	R 05/98	A
4D-CH-151			N/A			4	0		IWC-1222(A)			4C-CH-151 THRU 358 TO 4-CH-151.	R 06/93	A
8A-CH-2502	CVC-851	PULSE DAM	B-6	A312	Y	8	0.906	SUR/VOL	N/A	245	100	3" TEE ON 3K-CH-2502 TO PULSE DAMPENER.	R 06/93	A
8B-CH-2502	CVC-852	PULSE DAM	B-6	A312	Y	8	0.906	SUR/VOL	N/A	245	100	3" TEE ON 3L-CH-2502 TO PULSE DAMPENER.	R 06/93	A
8C-CH-2502	CVC-853	PULSE DAM	B-6	A312	Y	8	0.906	SUR/VOL	N/A	245	100	3" TEE ON 3M-CH-2502 TO PULSE DAMPENER.	R 06/93	A
SCH11	1265		B-6		-	8	0	SUR/VOL	N/A	245	100	24" CHARGING PUMP PULSE DAMPENER-RECLASS	R 07/94	A

PID No.: 33013-1266
Class: 2
System: CVCS-BORIC ACID
Comp Type: COMPONENTS

ISI Line #	Gilbert Ln. #	SWR Line	Fig. #	Matrl.	IN?	Size	TK(in.)	Method	ASME Exemption	Po	Temp.	Line Description/Remarks	Revise	Status
TCH07A	1266		N/A		-	0	0		NOT SECT XI	5	210	BORIC ACID STORAGE TANK A.	R 12/93	A
TCH07B	1266		N/A		-	0	0		NOT SECT XI	5	210	BORIC ACID STORAGE TANK B.	R 12/93	A

PID No.: 33013-1266
Class: 2
System: CVCS-BORIC ACID
Comp Type: PIPING

ISI Line #	Gilbert Ln. #	SWR Line	Fig. #	Matrl.	IN?	Size	TK(in.)	Method	ASME Exemption	Po	Temp.	Line Description/Remarks	Revise	Status
2A-SI-151B	SI-400		B-15	A312	Y	2	0.154		IWC-1222(A)	5	210	8X8X2 TEE ON 8A-SI-301B TO VALVE 345.	R 11/98	A
2B-CH-151B	SI-400		N/A	A312	Y	2	0.154		IWC-1222(A)	5	210	BORIC ACID TANK B TO HCV 105.	12/98	A
2C-SI-151A	SI-400		B-15	A312	Y	2	0.154		IWC-1222(A)	5	210	8X8X2 TEE ON 8B-SI-301A TO VALVE 331.	R 11/98	A
2D-CH-151A	SI-400		N/A	A312	Y	2	0.154		IWC-1222(A)	5	210	BORIC ACID TANK A TO HCV 104.	12/98	A
3A-CH-151A	SI-400		N/A		Y	3	0		IWC-1222(A)	5	210	BORIC ACID TANK A TO LOOP SEAL FLANGE.	R 11/98	A
3B-CH-151B	SI-400		N/A	A312	Y	3	0.12		IWC-1222(A)	5	210	BORIC ACID TANK B TO LOOP SEAL FLANGE.	R 11/98	A
8A-SI-301B	SI-400	8-SI-2001	B-15	A312	Y	8	0.322	SUR/VOL	N/A	5	210	BORIC ACID TANK B TO 8X8X8 TEE (HPSI).	R 12/93	A
8B-SI-301A	SI-400	8-SI-2001	B-15	A312	Y	8	0.322	SUR/VOL	N/A	5	210	BORIC ACID TANK A TO 8X8X8 TEE (HPSI).	R 12/93	A

PID No.: 33013-1272-1
Class: 3
System: WASTE DISPOSAL-LIQ-RC DRAIN TK
Comp Type: PIPING

ISI Line #	Gilbert Ln. #	SWR Line	Fig. #	Matrl.	IN?	Size	TK(in.)	Method	ASME Exemption	Po	Temp.	Line Description/Remarks	Revise	Status
4-WD2-151			N/A		?	4	0		IWD-1220(A1)			FUEL TRANSFER CANAL TO VALVE 1711.	R 05/98	A

PID No.: 33013-1272-2
Class: 2
System: WASTE DISPOSAL-LIQ-RC DRAIN TK
Comp Type: PIPING

ISI Line #	Gilbert Ln. #	SWR Line	Fig. #	Matrl.	IN?	Size	TK(in.)	Method	ASME Exemption	Po	Temp.	Line Description/Remarks	Revise	Status
2A-WD-152			N/A		-	2	0		IWC-1222(A)	3	80	PEN 129 TO 1716A, 1ST TEE W/RDCR'S.	R 06/93	A
3A-WD-151	RHR-300		N/A	A312	-	3	0.12		IWC-1222(A)	2	80	4A TO VALVE 1721, 4C.	R 06/93	A
3B-WD-151	RHR-300		N/A	A312	-	3	0.12		IWC-1222(A)	2	80	VALVE 1722 TO 4C.	R 06/93	A
3C-WD-151	RHR-300		N/A	A312	-	3	0.12		IWC-1222(A)	2	80	4C TO VALVE 1003B.	R 06/93	A
3E-WD-151			N/A			3	0.12		IWC-1222(A)			4X4X3 TEE ON 4C TO VALVE 1003A.	R 06/93	A
4A-WD-151	RHR-300		N/A	A312	-	4	0.12		IWC-1222(A)	2	80	PEN 143, TO 8431, 4X3 RDCR BEFORE 1721.	R 06/93	A
4C-WD-151	RHR-300		N/A	A312	-	4	0.12		IWC-1222(A)	2	80	3A TO 3C.	R 06/93	A

PID No.: 33013-1272-2
Class: 3
System: WASTE DISPOSAL-LIQ-RC DRAIN TK
Comp Type: PIPING

ISI Line #	Gilbert Ln. #	SWR Line	Fig. #	Matrl.	IN?	Size	TK(in.)	Method	ASME Exemption	Po	Temp.	Line Description/Remarks	Revise	Status
3-WD2-151			N/A		?	3	0.216		IWD-1220(A1)			FUEL TRANSFER DRAIN TO 1795G, 1722.	R 05/98	A

PID No.: 33013-1275-2
Class: 2
System: WASTE DISPOSAL-GAS H2 RECOMBIN
Comp Type: PIPING

ISI Line #	Gilbert Ln. #	SWR Line	Fig. #	Matrl.	IN?	Size	TK(in.)	Method	ASME Exemption	Po	Temp.	Line Description/Remarks	Revise	Status
2A-WDG-152N			N/A		-	2	0		IWC-1222(A)	<27	<200	PEN 202 TO RDCR BEFORE VALVE 1084B.	R 06/93	A
2B-WDG-152N			N/A			2	0		IWC-1222(A)			PEN P304 TO VALVE 1084A.	R 06/93	A

PID No.: 33013-1275-2
Class: 3
System: WASTE DISPOSAL-GAS H2 RECOMBIN
Comp Type: PIPING

ISI Line #	Gilbert Ln. #	SWR Line	Fig. #	Matrl.	IN?	Size	TK(in.)	Method	ASME Exemption	Po	Temp.	Line Description/Remarks	Revise	Status
2C-WDG-152N			N/A		-	2	0		IWD-1220(A1)	<27	<200	PEN 202 TO 8425, 8425A, 3/4" REDCR.	A 05/98	A
2D-WDG-152N			N/A		-	2	0		IWD-1220(A1)	<27	<200	PEN 304 TO 8433, 8433A, 3/4" REDCR.	A 05/98	A

PID No.: 33013-1277-1
Class: 2
System: STEAM GENERATOR BLOWDOWN
Comp Type: COMPONENTS

ISI Line #	Gilbert Ln. #	SWR Line	Fig. #	Matrl.	IN?	Size	TK(in.)	Method	ASME Exemption	Po	Temp.	Line Description/Remarks	Revise	Status
EMS01A			B-1		Y	0	0	SUR/VOL	N/A	715	505	STEAM GENERATOR A.	R 05/98	A
EMS01B			B-1		Y	0	0	SUR/VOL	N/A	715	505	STEAM GENERATOR B.	R 05/98	A

PID No.: 33013-1277-1
Class: 2
System: STEAM GENERATOR BLOWDOWN
Comp Type: PIPING

ISI Line #	Gilbert Ln. #	SWR Line	Fig. #	Matrl.	IN?	Size	TK(in.)	Method	ASME Exemption	Po	Temp.	Line Description/Remarks	Revise	Status
2.25D-BD-600-1A			N/A			2.25	0		IWC-1222(A)			VALVE 5701 TO VALVE 5738.	R 06/93	A
2.25D-BD-600-1B			N/A			2.25	0		IWC-1222(A)			VALVE 5702 TO VALVE 5737.	R 06/93	A
2A-MS-600-1A	SGB-100		N/A	A106	Y	2	0.218		IWC-1222(A)	100	547	N. NOZZLE TO FIRST TEE GIRTH WELD.	R 06/93	A
2A-MS-600-1B	SGB-200		B-31	A106	Y	2	0.218		IWC-1222(A)	100	547	N. NOZZLE TO FIRST TEE GIRTH WELD.	R 06/93	A
2B-MS-600-1A	SGB-100		N/A	A106	Y	2	0.218		IWC-1222(A)	100	547	S. NOZZLE TO FIRST TEE GIRTH WELD.	R 06/93	A
2B-MS-600-1B	SGB-200		B-31	A106	Y	2	0.218		IWC-1222(A)	100	547	S. NOZZLE TO FIRST TEE GIRTH WELD.	R 06/93	A
2C-MS-600-1B	SGB-200,SGB-4		B-31	A106	Y	2	0.218		IWC-1222(A)	100	547	2A-MS-600-1B & 2B TO VALVE 5702.	R 06/93	A
3A-BD-600-1A	SGB-100		N/A	A106	Y	3	0		IWC-1222(A)	100	547	TEE 2A-MS-600-1A & 2B TO 5701.	R 06/93	A

PID No.: 33013-1279
Class: 2
System: POST ACCIDENT SAMPLING
Comp Type: PIPING

ISI Line #	Gilbert Ln. #	SWR Line	Fig. #	Matrl.	IN?	Size	TK(in.)	Method	ASME Exemption	Po	Temp.	Line Description/Remarks	Revise	Status
3A-SS-151			N/A			3	0		IWC-1222(A)			PEN P107 TO VALVE 1723.	A 11/91	A

PID No.: 33013-1865
Class: 2
System: CONTAINMENT HVAC SYSTEMS
Comp Type: PIPING

ISI Line #	Gilbert Ln. #	SWR Line	Fig. #	Matrl.	IN?	Size	TK(in.)	Method	ASME Exemption	Po	Temp.	Line Description/Remarks	Revise	Status
6A-MPS-2000			N/A		-	6	0		IWC-1222(C)	125	80	V 7445 OUT CONT PAST PEN 309 TO V 7478.	R 06/93	A

PID No.: 33013-1866
Class: 2
System: CONTAINMENT PURGE EXH & MONIT
Comp Type: PIPING

ISI Line #	Gilbert Ln. #	SWR Line	Fig. #	Matrl.	IN?	Size	TK(in.)	Method	ASME Exemption	Po	Temp.	Line Description/Remarks	Revise	Status
36A-CP-000			N/A			36	0		IWC-1222(C)	<27	<200	36" PURGE EXHAUST THRU PEN 300.	A 12/98	A

PID No.: 33013-1870
Class: 2
System: HVAC-AUXILIARY & INTERM. BLDG.
Comp Type: PIPING

ISI Line #	Gilbert Ln. #	SWR Line	Fig. #	Matrl.	IN?	Size	TK(in.)	Method	ASME Exemption	Po	Temp.	Line Description/Remarks	Revise	Status
6A-CFA			N/A		-	6	0		IWC-1222(C)	.5	110	VALVE 7970 PAST PEN P132 TO VALVE 7971.	R 06/93	A

PID No.: 33013-1882
Class: 2
System: CONTAINMENT BREATHING AIR
Comp Type: PIPING

ISI Line #	Gilbert Ln. #	SWR Line	Fig. #	Matrl.	IN?	Size	TK(in.)	Method	ASME Exemption	Po	Temp.	Line Description/Remarks	Revise	Status
6-AT-150-4			N/A			6	0		IWC-1222(C)	<27	<200	VALVE 7443 THRU PEN P317 TO FLANGE.	A 11/91	A
6-LT-000			N/A			6	0		IWC-1222(C)	<27	<200	VALVE 7444 THRU PEN P313 TO FLANGE.	R 06/93	A

PID No.: 33013-1886-2
Class: 2
System: SERVICE AIR
Comp Type: PIPING

ISI Line #	Gilbert Ln. #	SWR Line	Fig. #	Matrl.	IN?	Size	TK(in.)	Method	ASME Exemption	Po	Temp.	Line Description/Remarks	Revise	Status
2-SA-150-4			N/A			2	0		IWC-1222(A)			VALVE 7141 THRU PEN P310 TO VALVE 7226.	R 06/93	A

PID No.: 33013-1887
Class: 2
System: INSTRUMENT AIR - CONTNMT BLDG
Comp Type: PIPING

ISI Line #	Gilbert Ln. #	SWR Line	Fig. #	Matrl.	IN?	Size	TK(in.)	Method	ASME Exemption	Po	Temp.	Line Description/Remarks	Revise	Status
2-IA-125-8			N/A			2	0		IWC-1222(A)			VALVE 5392 THRU PEN P310 TO VALVE 5393.	A 11/91	A

PID No.: 33013-1908-3
Class: 2
System: PRIMARY WATER TREATMENT
Comp Type: PIPING

ISI Line #	Gilbert Ln. #	SWR Line	Fig. #	Matrl.	IN?	Size	TK(in.)	Method	ASME Exemption	Po	Temp.	Line Description/Remarks	Revise	Status
2A-PW-125-1			N/A			2	0		IWC-1222(A)			3X2 RDCR INSIDE CONTNMT TO VALVE 8419.	R 06/93	A
2-PW-125-1			N/A			2	0		IWC-1222(A)			VALVE 8418 TO 3X2 RDCR OUTSIDE CONTNMT.	R 06/93	A
3-PW-125-1			N/A			3	0		IWC-1222(A)			3X2 RDCR OUTSIDE TO 3X2 RDCR INSIDE.	R 06/93	A

PID No.: 33013-1991
Class: 2
System: FIRE PROTECTION IN CONTAINMENT
Comp Type: PIPING

ISI Line #	Gilbert Ln. #	SWR Line	Fig. #	Matrl.	IN?	Size	TK(in.)	Method	ASME Exemption	Po	Temp.	Line Description/Remarks	Revise	Status
2A-FS-000			N/A			2	0		IWC-1222(A)			VALVE 5129 AT PEN P103 TO 5130.	R 05/98	A
4A-FS-152			N/A		-	4	0		IWC-1222(A)	135	80	VALVE 9227 TO VALVE 9229 IN CONTAINMENT.	R 11/91	A

PID No.: 33013-2279-1
Class: 3
System: WASTE EVAPORATOR SKID
Comp Type: COMPONENTS

ISI Line #	Gilbert Ln. #	SWR Line	Fig. #	Matrl.	IN?	Size	TK(in.)	Method	ASME Exemption	Po	Temp.	Line Description/Remarks	Revise	Status
EWD07			N/A			1.5	0		IWD-1220(A2)			WASTE EVAPORATOR CONCENTRATOR.	R 05/98	A
PWD08			N/A			1.5	0		IWD-1220(A2)			WASTE EVAPORATOR FEED TANK PUMP.	R 05/98	A
TWD08			N/A			1.5	0		IWD-1220(A2)			WASTE EVAPORATOR FEED TANK.	R 05/98	A

PID No.: 33013-2279-1
Class: 3
System: WASTE EVAPORATOR SKID
Comp Type: PIPING

ISI Line #	Gilbert Ln. #	SWR Line	Fig. #	Matrl.	IN?	Size	TK(in.)	Method	ASME Exemption	Po	Temp.	Line Description/Remarks	Revise	Status
1.25A-WD9			N/A		?	1.25	0		IWD-1220(A1)			WE CONCENTRATOR EWD07 TO 2620C, SWD14.	R 05/98	A
1.5A-WD9			N/A		?	1.5	0		IWD-1220(A1)			WEFT TWD08 TO 2642D, WEFT PUMP.	R 05/98	A
1.5B-WD9			N/A		?	1.5	0		IWD-1220(A1)			1A TO SWD14, 2642Z, .75A.	R 05/98	A

PID No.: 33013-2285
Class: 3
System: AFW LUBE OIL
Comp Type: COMPONENTS

ISI Line #	Gilbert Ln. #	SWR Line	Fig. #	Matrl.	IN?	Size	TK(in.)	Method	ASME Exemption	Po	Temp.	Line Description/Remarks	Revise	Status
EAF01			N/A			1.5	0		IWD-1220(A2)			TURBIN DRIVEN AFW PUMP LUBE OIL COOLER.	R 05/98	A
EAF02A			N/A			1.5	0		IWD-1220(A2)			AFW PUMP A LUBE OIL COOLER.	R 05/98	A
EAF02B			N/A			1.5	0		IWD-1220(A2)			AFW PUMP B LUBE OIL COOLER.	R 05/98	A
PLO10			N/A			1.5	0		IWD-1220(A2)			TDAFW PUMP AC LUBE OIL PUMP	A 07/98	A
PLO11			N/A			1	0		IWD-1220(A2)			TDAFW PUMP DC LUBE OIL PUMP	A 07/98	A
TLO05			N/A			2	0		IWD-1220(A2)			TDAFW PUMP LUBE OIL RESERVOIR	A 07/98	A

PID No.: 33013-2285
Class: 3
System: AFW LUBE OIL
Comp Type: PIPING

ISI Line #	Gilbert Ln. #	SWR Line	Fig. #	Matrl.	IN?	Size	TK(in.)	Method	ASME Exemption	Po	Temp.	Line Description/Remarks	Revise	Status
1.5A-AFWLO-150			N/A			1.5	0		IWD-1220(A1)			FM EAF02A TO REDUCER	A 07/98	A
1.5B-AFWLO-150			N/A			1.5	0		IWD-1220(A1)			FM EAF02B TO REDUCER	A 07/98	A
1.5C-AFWLO-150			N/A			1.5	0		IWD-1220(A1)			FM TLO05 TO REDUCER BY PLO11	A 07/98	A
1.5D-AFWLO-150			N/A			1.5	0		IWD-1220(A1)			FM TLO05 TO PLO10	A 07/98	A
1.5E-AFWLO-150			N/A			1.5	0		IWD-1220(A1)			FM PLO10 TO REDUCER BT V5490K	A 07/98	A
1.5F-AFWLO-150			N/A			1.5	0		IWD-1220(A1)			FM EAFO1 TO .75L	A 07/98	A
1.5G-AFWLO-150			N/A			1.5	0		IWD-1220(A1)			FM EAFO1 TO .75M	A 07/98	A
1.5H-AFWLO-150			N/A			1.5	0		IWD-1220(A1)			FM EAF02A TO REDUCER	A 07/98	A
1.5I-AFWLO-150			N/A			1.5	0		IWD-1220(A1)			FM EAF02B TO REDUCER	A 07/98	A
2A-AFWLO-150			N/A			2	0		IWD-1220(A1)			FM TLO07 TO REDUCER	A 07/98	A
2B-AFWLO-150			N/A			2	0		IWD-1220(A1)			FM TLO07 TO FLANGE	A 07/98	A
2C-AFWLO-150			N/A			2	0		IWD-1220(A1)			FM 2B TO REDUCER	A 07/98	A
2D-AFWLO-150			N/A			2	0		IWD-1220(A1)			FM 3A TO TURBINE OUTBOARD BEARING	A 07/98	A
2E-AFWLO-150			N/A			2	0		IWD-1220(A1)			FM .75A TO FLANGE	A 07/98	A
2F-AFWLO-150			N/A			2	0		IWD-1220(A1)			FM 2E TO REDUCER BY TI 6740	A 07/98	A
2G-AFWLO-150			N/A			2	0		IWD-1220(A1)			FM 3B TO FLANGE	A 07/98	A
2H-AFWLO-150			N/A			2	0		IWD-1220(A1)			FM 2G TO REDUCER	R 07/98	A
3A-AFWLO-150			N/A			3	0		IWD-1220(A1)			FM 2C TO REDUCER	A 07/98	A
3B-AFWLO-150			N/A			3	0		IWD-1220(A1)			FM 2F TO REDUCER BY TURBINE INBOARD BRG	A 07/98	A

1.0 General

This section identifies program examination allocations for "ASME Code Required" and "Augmented Required" groups that will be performed during the fourth interval at R. E. Ginna Nuclear Power Plant. The tables identify the total number of components, the required number and the distribution of the required number within one of the three periods.

The "ASME Code Required" group addresses the program requirements with respect to ASME Section XI. This group is divided into the following allocations.

Class 1
Class 2
Class 3
Class 1, 2, & 3 Supports
Class MC
Class CC

The "Augmented Required" group addresses commitments that were added to the Inservice Inspection Program to ensure compliance and performance. This group is divided into the following allocations.

Reactor Coolant Pump Flywheel Program
High Energy Program
Snubber Program

"Owner Elected" examinations are performed by R. E. Ginna Nuclear Power Plant. These additional examinations are not mandatory and are determined by the owner to ensure additional safety and reliability of the plant. These additional "Owner Elected" examinations may not be identified within the allocation tables but includes the following programs.

Seismic Support Program
C-F-1 Thin Wall Weld Program
High Energy Integral Attachments
High Energy Component Supports
High Energy System Leakage

ASME CODE REQUIRED

Class 1

			Fourth Interval Scheduled/Percent		
Category	Total	Required	Period 1	Period 2	Period 3
B-A	7	7	0/00%	0/00%	7/100%
B-B	12	7	2/28.6%	2/57.1%	3/100%
B-D(1)	30	22	3/14%	2/23%	17/100%
B-F	15	15	4/27%	3/46.7%	8/100%
B-G-1(1)	245	195	0/00%	0/00%	195/100%
B-G-2 (1)	21	10	3/30%	2/50%	5/100%
B-J	515	131	30/23.9%	48/59.5%	53/100%
B-K	23	9	3/33%	3/66%	3/100%
B-L-1(2)	6	3	0/0%	3/100%	0/100%
B-L-2	2	*	*	*	*
B-M-1(2)	8	2	0/0%	0/0%	2/100%
B-M-2	*	*	*	*	*

(*) = if disassembled.

(1) = % result from footnote requirements and/or Relief Requests.

(2) = % result from having only 1 component

Class 1 (Con't)

Category	Total	Required	Period 1	Fourth Interval Scheduled/Percent Period 2	Period 3
B-N-1	3	3	1/33.3%	1/66.6%	1/100%
B-N-2	1	1	0/0%	0/0%	1/100%
B-N-3	1	1	0/0%	0/0%	1/100%
B-O	20	3	0/0%	0/0%	3/100%
B-P	1	7	2/28.6%	3/71.4%	2/100%
B-Q	14	**	**	**	**

(**) = As required by Steam Generator Program.

Class 2

Category	Total	Required	Period 1	Fourth Interval Scheduled/Percent Period 2	Period 3
C-A	12	6	2/33.3%	2/66.7%	2/100%
C-B	24	12	4/33.3%	4/66.7%	4/100%
C-C	117	15	4/26%	5/60%	6/100%
C-D	0	0	0/0.0%	0/0.0%	0/0.00%
C-F-1	304	55	18/32%	18/65%	19/100%
C-F-2	149	29	9/31%	10/65.5%	10/100%
C-G	0	0	0/0.0%	0/0.0%	0/0.00%
C-H	22	66	22/33.3%	22/66.7%	22/100%

Class 3

Category	Total	Required	Fourth Interval Scheduled/Percent Period 1	Period 2	Period 3
D-A	161	21	7/33%	7/66%	7/100%
D-B	15	45	15/33%	15/66%	15/100%

Class 1, 2, 3, and MC Supports

Category Item No.	Total	Required	Fourth Interval Scheduled/Percent Period 1	Period 2	Period 3
F-A F1.10	112	37 (25% required)	12/32%	12/64%	13/100%
F-A F1.20	287	52 (15% required)	17/32%	17/65%	18/100%
F-A F1.30	519	58 (10% required)	19/32%	19/65%	20/100%
F-A F1.40	47	26 (See note 1.)	5/19.2%	11/61.5%	10/100%
Total:	965	173	53/30.6%	59/64.7%	61/100%

Note 1 - Only one of the multiple components are required to be examined.

Class MC

Category	Total	Required	Period 1	Period 2	Period 3
E-A	129	258	0/00%	0/00%	258/100%
E-B	(NRC optional - not required)				
E-C	(As required)				
E-D	3	3	1/33.3%	1/66.7%	1/100%
E-F	(NRC optional - not required)				
E-G	59	59	19/32%	20/66%	20/100%
E-P	(As required per Appendix J option B)				
E-PC (paint)	(As required)				

MC Augmented (Rulemaking Required)

Category	Total	Required	Period 1	Period 2	Period 3
E-A	129	258	129/50%	129/100%	0/100%

Class CC (only 2 5-year Periods)

Category	Total	Required	Period 1	Period 2
L-A (1)	36	52	34/65%	18/100%
L-B	800	(*)	(*)	(*)

(*) As required by existing Tendon Program as specified within the Rulemaking.

(1) Variation due to reduced Suspect Area Exam Requirements base on exam history - no change since last exam.

Class CC Augmented (Rulemaking Required – only 2 - 5-year Periods)

Category	Total	Required	Period 1	Period 2
G-C (1)	90	(*)	(*)	(*)

(*) As required by existing Tendon Program as specified within the Rulemaking.

(1) Grease Can exams.

Augmented Required Programs

RCP Flywheel Program:

Category	Total	Required	Period 1	Fourth Interval Scheduled/Percent Period 2	Period 3
Flywheel	2	0	0/00%	0/00%	0/00%

High Energy Program:

Category	Total	Required	Period 1	Fourth Interval Scheduled/Percent Period 2	Period 3
HE-CB	97	97	31/32%	29/62%	37/100%
HE-IA (*)	17	2	0/00%	1/50%	1/100%
HE-DB	18	18	6/33%	6/66%	6/100%
HE-LK	2	6	2/33%	2/66%	2/100%
HE-CS	62	12	4/33%	4/66%	4/100%

(*) = Denotes Integral Attachment

Snubber Program:

Category	Total	Required	Period 1	Fourth Interval Scheduled/Percent Period 2	Period 3
SN-VT	149	**	**	**	**
SN-FT	149	**	**	**	**

** As required by the Snubber Program.

1.0 **General:**

The list below identifies Ultrasonic Calibration Blocks that are owned by and utilized at R. E. Ginna Nuclear Power Plant. Other calibration blocks not owned by R. E. Ginna Nuclear Power Plant may be employed only if they meet the applicable requirements specified within ASME Section XI, 1995 Edition, and 1996 Addenda.

IDENTIFICATION	DESCRIPTION	MAT'L
6-SS-10S-.134-1A-REG	6" SCHEDULE 10-SS-PIPE	SA 312
6-SS-40S-.280-2-REG	6" SCHEDULE 40-SS-PIPE	SA 376
8-SS-10S-.148-3-REG	8" SCHEDULE 10-SS-PIPE	SA 312
8-SS-40S-.322-4-REG	8" SCHEDULE 40-SS-PIPE	SA 312
8-SS-160-.906-5-REG	8" SCHEDULE 160-SS-PIPE	SA 312
10-SS-10S-.165-6-REG	10" SCHEDULE 10-SS-PIPE	SA 312
10-SS-40S-.365-7-REG	10" SCHEDULE 40-SS-PIPE	SA 312
10-SS-140-1.0-8-REG	10" SCHEDULE 140-SS-PIPE	SA 376
12-SS-5S-.156-9-REG	12" SCHEDULE 5-SS-PIPE	SA 312
14-SS-10-.250-10-REG	14" SCHEDULE 10-SS-PIPE	SA 312
14-CS-30-.375-11-REG	14" SCHEDULE 30-CS-PIPE	SA 106
PL-1.187-SS-12-REG	1.187" THICK-SS-PLATE (RHR HTR)	SA 240
PL-.30-SS-13-REG	.30 THICK-SS-PLATE	SA 240
PL-3.625-CS-14R-REG	3.625 THICK-CS-PLATE (S/G WELDS 77, 80, 160,162,169) (20T-111)	SA 508
9-CSCL-15-REG	9" THICK-CS-CLAD-VESSEL BLOCK	SA 508

IDENTIFICATION	DESCRIPTION	MAT'L
7-CSCL-16-REG	7" THICK-CS-CLAD-VESSEL BLOCK	SA 508
5-CSCL-17-REG	5" THICK-CS-CLAD-VESSEL BLOCK	SA 508
PL-3.0-SS-18-REG	3" THICK-SS-PLATE	SA 479
6-SS-160-.719-19-REG	6" SCHEDULE 160-SS-PIPE	SA 312
4-SS-160-.531-20-REG	4" SCHEDULE 160-SS-PIPE	SA 376
3-SS-160-.438-21-REG	3" SCHEDULE 160-SS-PIPE	SA 376
8.5-6-8-CS-22-REG	REACTOR PRESSURE VESSEL NUT	SA 320 L43
6-1-8-CS-23-REG	REACTOR PRESSURE VESSEL STUD (THREADS IN FLANGE)	SA 320 L43
6-1-8-CS-23A-REG	FULL SIZE RPV STUD	SA 320
IR-CSCL-24-REG	PZR O.D. INNER RADIUS BLOCK	SA 533
6-SS-120-.562-25-REG	6" SCHEDULE 120-SS-PIPE (RHE)	SA 312
FS/NS-CSCL-26-REG	FLANGE AND NOZZLE SHELL BLOCK (VESSEL)	SA 533
VF/S-CSCL 26A-REG	VESSEL FLANGE TO SHELL	SA 336
IR-CSCL-27-REG	NOZZLE INNER RADIUS BLOCK	SA 553
CRD-SS/INC-.656-28R-REG	CRD UT CAL. BLOCK SS/I690 (5214836)	SB 166
10-SS-140-1.0-29-REG	10" SCHEDULE 140-SS-PIPE	SA 312
3.5-.625-8-CS-30-REG	REACTOR COOLANT PUMP STUD	ACTUAL STUD
5.375-3.5-8-CS-31-REG	REACTOR COOLANT PUMP NUT	ACTUAL NUT

IDENTIFICATION	DESCRIPTION	MAT'L
1.187-S-7-CS-32-REG	1.187" DIA. X 7 THREADS/IN-CS-STUD	SA 193
1.187-N-7-CS-33-REG	1.187" DIA. X 7 THREADS/IN-CS-NUT	SA 194
1.125-S-12-CS-34-REG	1.125" DIA. X 12 THREADS/IN-CS-STUD	SA 193
1.125-N-12-CS-35-REG	1.125" DIA. X 12 THREADS/IN-CS-NUT	SA 194
1.250-S-7-CS-36-REG	1.250" DIA. X 7 THREADS/IN-CS-STUD	SA 193
1.250-N-7-CS-37-REG	1.250" DIA. X 7 THREADS/IN-CS-NUT	SA 194
6-SS-X-1.1-38-REG	6", 1.1" WALL-SS-PIPE	SA 182
29ID-SS-X-2.5-39-REG	29" ID-SS-PIPE	SA 182
SI/N-CSCL-40R-REG	SAFETY INJECTION NOZZLE BLOCK	SA 508
27.5ID-CSS-X-2.4-41-REG	27.5" ID-CS-PIPE	SA 351
29ID-CSCL-X-3.25-42-REG	29" ID-CLAD-CS-PIPE INLET & OUTLET NOZ TO SAFE END	SA 508
5.437-SS-X-1.0-43R-REG	5.437" DIAMETER -1" - SAFE END	SA 182
PL-1.5-CS-44-REG	1.5" THICK-CS-PLATE	SA 285
14-CS-100-.938-45-REG	14" SCHEDULE 100-CS-PIPE (FW)	SA 106
18-CS-100-1.156-46-REG	18" SCHEDULE 100-CS-PIPE (FW)	SA 106
4-SS-80-.337-47-REG	4" SCHEDULE 80-SS-PIPE	SA 312
3-SS-80-.300-48-REG	3" SCHEDULE 80-SS-PIPE	SA 312
4.25-R-CS-N/RB-49-REG	REACTOR PRESSURE VESSEL NUT REFERENCE BLOCK	SA 516
2-S-8UN-CS-50R-REG	S/G SECONDARY MANWAY BOLT	SA193 GR B7
1.375-S-17-A490-51-REG	1.375 DIA. X 17" LONG-STEEL-STUD	ASTM A 490

IDENTIFICATION	DESCRIPTION	MAT'L
1.375-S-24-A490-52-REG	1.375 DIA. X 24" LONG-STEEL-STUD	ASTM A 490
1.375-S-33-A490-53-REG	1.375 DIA. X 33" LONG-STEEL-STUD	ASTM A 490
3-SP-14-A514-GRF-54-REG	COLUMN PIN 3" DIA X 14" LENGTH	ASTM A 514
1.875-9-8N-CS-56-REG	PRESSURIZER MANWAY BOLT	SA 193
1.125-S-8UN-CS-57R-REG	S/G HANDHOLE STUD	SA 193 GR B7
2-S-8UN-CS-58R-REG	S/G PRIMARY MANWAY STUD	SA 193 GR B7
2.89-1.87-8-CS-59-REG	S/G PRIMARY MANWAY STUD CLOSURE NUT	SA193
2-CS-40-.218-60-REG	2" BLOWDOWN	SA 335
15.0-SS-X-1.60-61-REG	15" PZR BLOCK	SA182 F316
8-CS-100-.594-63-REG	8" FW BLOCK	SA106 GR B
20-CS-100-1.281-64-REG	20" FW BLOCK	SA333 GR 6
24-CS-80-1.218-65-REG	24" MS BLOCK	SA106 GR B
30-CS-X-1.250-66-REG	30" MS BLOCK	SA517 GR 70
36-CS-X-1.47-67-REG	36" MS BLOCK	SA517 GR 70
3.0-CS-80-.300-68-REG	3" BLOWDOWN	SA 335

IDENTIFICATION	DESCRIPTION	MAT'L
IR-S/G-PRI-CSCL-70-REG	S/G PRIMARY NOZZLE INNER RADIUS	SA 508
IR-S/G-FW-CS-71-REG	S/G FEEDWATER NOZZLE INNER RADIUS	SA 508
5.5-CSCL-S/G-PRI-72-REG	S/G PRIMARY NOZZLE INNER RADIUS	SA 508
2.5-SS-10-D-73-REG	REACTOR COOLANT LOOP BRANCH CONNECTION	SA 182
4.0-SS-40S-.237-75 REG	4" SCHEDULE 40-SS-PIPE	SA 312 TP 304
PL-.750-SS-76-REG	RHR, LOWER HEAD TO SHELL	SA 240 TP 304
PL-.438-CS-77-REG	0.438" THICK CS PLATE	SA285 GR C
.500"-SCH 160-.188-78-REG	TURBINE LUBE OIL GUARD PIPING	SA106 GR B
PL-0.875-CS-79-REG	5A & 5B HEATER SHELLS	SA516 GR 70
PL-4.4-SS-80-REG	S/G –W-55 & W-56 (20T-165)	SA316
18-INC690-1.125-81-REG	S/G FW NOZZLE TO SAFE END (WELD 140) (20T-166)	SB166
PL-7-CS-82-REG	S/G HEAD TO TUBESHEET (WELD 22) (20T-131)	SA508

1.0 **General:**

1.1 The augmented Inservice Inspection Program for High Energy (Class & Non-Class) Piping, outside of containment, as established in Rochester Gas and Electric Corporation's Report "Effect of Postulated Pipe Breaks Outside the Containment Building", dated October 29, 1973, provides for the examination of all identified circumferential butt welds at design break locations and at consequential locations where a failure would result in unacceptable consequences. This program also establishes an Owner Elected High Energy Piping component support examination requirements.

2.0 **Examination Requirements:**

2.1 Identified High Energy Piping circumferential butt welds at design break locations and consequential break locations shall be examined utilizing volumetric, surface, and visual examination techniques.

2.2 Identified Non-Class High Energy Piping component supports shall be examined utilizing visual examination techniques. The owner elected component support selection shall be based on the requirements of IWF-2500 for Class 2 piping supports. This sampling scheme provides for a 15% sample distribution among the systems and support types within each system. Integral attachments associated with non-class High Energy piping component supports shall receive a surface examination, based on the Code requirements for Class 2 Category C-C piping integrally welded attachments. This sampling scheme implements a 10% sample to be examined.

2.3 Examinations on High Energy Piping circumferential butt welds at design break locations and consequential break locations, as well as component supports and integrally welded attachments, are identified within Table 1 of this section.

2.4 Owner Elected System Leakage Testing and associated visual examination for leakage, shall be performed on the main run of the High Energy Piping.

2.4.1 Leakage testing requirements for High Energy Piping was derived from ASME Section XI Code, IWC-5000, as a continuation of the Class 2 boundary.

2.4.2 The visual examination for leakage (VT-2) shall be performed in accordance with IWA-5240 and accepted to IWC-3516.

3.0 **Examination Methods:**

3.1 Examinations shall be performed in accordance with 5.1.1, 5.1.2, and 2.4.2 of Section 1, as applicable.

4.0 **Frequency of Examination**

4.1 Identified High Energy Piping circumferential butt welds at design break locations shall be examined once per interval. Circumferential butt welds at consequential break locations shall be examined once per interval.

4.2 Selected Non-Class High Energy Piping component supports shall be examined once per interval.

4.3 Identified High Energy Piping Integrally welded attachments shall be examined once per interval.

4.4 On the main run of High Energy Piping pressure boundary, a Leakage examination shall be performed once per period.

5.0 **Examination Performance:**

5.1 The examinations of the High-Energy piping welds outside of containment, integral attachments, and component supports shall be performed in accordance with 5.1.1 and 5.1.2 as applicable.

5.1.1 **High Energy Program Piping Weld Examinations:**

High Energy Program Piping Welds that are classified as ASME Class 2, 3, Safety Significant Class Q or Non-Class, the following examination types and associated acceptance criteria will be used, as applicable.

Examination Type	Examination Performance & Acceptance
Visual Examination of Welds (VT)	B31.1 - 1967 or Later Editions
Surface Examination of Welds (MT/PT)	ASME Section XI, 1995 with 1996 Addenda IWA-2220, IWC-3514
Radiographic Weld Examination (RT)	B31.1 - 1967 or Later Editions
Ultrasonic Weld Examination (UT)	ASME Section XI, 1995 with 1996 Addenda, IWA-2230, IWC-3514. Appendix VIII (PDI) may be used.

5.1.2 **High Energy Program Component Support Examinations:**

High Energy Program Component Supports that are classified as ASME Class 2, 3, Safety Significant Class Q or Non-Class, the following examination types and associated acceptance criteria will be used, as applicable.

Examination Type	Examination Performance & Acceptance
Visual Examination of Supports (VT)	ASME Section XI, 1995 with 1996 Addenda, IWA-2210, IWF-3410.
Surface Examination of Integral Attachments (MT/PT)	ASME Section XI, 1995 with 1996 Addenda, IWA-2220, IWC-3512

6.0 **Examination Acceptance:**

6.1 Examination results shall be acceptable when meeting the applicable acceptance criteria identified within 5.1.1, 5.1.2, or 2.4 .

6.2 When a Class 2, Class 3, Safety Significant Class Q or Non-Class High Energy component examination detects flaws that exceed the acceptance standards identified within 5.1.1, 5.1.2, or 2.4; the component is acceptable for continued service if an analytical evaluation as described in IWC-3600 (ASME Section XI Code, 1995 Edition, 1996 Addenda) is performed.

6.3 Examination results not meeting steps 6.1 or 6.2 shall be repaired or replaced in accordance with step 7.0 .

7.0 **Repair & Replacement Testing Requirements:**

7.1 Repairs and Replacements performed on ASME Class 2 and 3 High Energy pressure retaining piping and associated component supports and integral attachments shall conform to the requirements specified within Section 12, the Repair and Replacement Program.

7.2 Repairs and Replacements performed on Non-Class or Safety Significant Class Q High Energy pressure retaining piping, associated components supports and integral attachments shall conform to applicable plant procedures.

8.0 **Scheduling:**

8.1 Scheduling of the High Energy Program piping welds, component supports and integral attachments shall be performed and controlled within Supplement 1 to the Inservice Inspection Program, the Program Plan.

8.2 Table 1 identifies welds, component supports, and integral attachments that are within the High Energy Program.

9.0 **Reports and Records:**

9.1 Reports and Records generated on High Energy pressure retaining components, integral attachments, and component supports shall conform, as applicable, to the requirements of Section 1 and Section 12 of the Inservice Inspection Program.

TABLE 1

HIGH ENERGY PROGRAM

MAIN STEAM LOOP A - WELDS:

Design Basis Break

30A-MS-600-1A	D	30A-MS-600-1A	D1
30A-MS-600-1A	F1	36-MS-600-1	L1

Consequential Break

30A-MS-600-1A	D2	30A-MS-600-1A	D3
30A-MS-600-1A	E	30A-MS-600-1A	E1
30A-MS-600-1A	E2	30A-MS-600-1A	F
30A-MS-600-1A	G	30A-MS-600-1A	G1
30A-MS-600-1A	G2	30A-MS-600-1A	H
30A-MS-600-1	J	30A-MS-600-1	K
30A-MS-600-1	L		

MAIN STEAM LOOP B - WELDS:

Design Basis Break

30B-MS-600-1B	D	30B-MS-600-1B	H1
30B-MS-600-1B	J1	36-MS-600-1	P1

Consequential Break

30B-MS-600-1B	D1	30B-MS-600-1B	D2
30B-MS-600-1B	E	30B-MS-600-1B	J
30B-MS-600-1B	K	30B-MS-600-1B	L
30B-MS-600-1B	L1	30B-MS-600-1B	L2
30B-MS-600-1B	M	30B-MS-600-1	N
30B-MS-600-1	O	30B-MS-600-1	P

TABLE 1 (Cont.)

MAIN STEAM - TURBINE BUILDING - WELDS:

Design Basis Break

36-MS-600-1	L2

Consequential Break

36-MS-600-1	L4	24A-MS-600-1A	A
24A-MS-600-1A	B	24A-MS-600-1A	B1
24A-MS-600-1A	C1	24A-MS-600-1A	D
24A-MS-600-1A	D1	24B-MS-600-1A	A
24B-MS-600-1A	B	24B-MS-600-1A	B1
24B-MS-600-1A	C	24B-MS-600-1A	C1
24B-MS-600-1A	D		

FEEDWATER - TURBINE BUILDING - WELDS:

Design Basis Break

20-FW-900-1	M3

Consequential Break

20-FW-900-1	J	20-FW-900-1	K1
20-FW-900-1	L	20-FW-900-1	L1
20-FW-900-1	M	20-FW-900-1	M1
20-FW-900-1	M2	8-FW-900-1	A
8-FW-900-1	B	8-FW-900-1	C
8-FW-900-1	D	8-FW-900-1	E
8-FW-900-1	F	8-FW-900-1	G
8-FW-900-1	H		

TABLE 1 (Cont.)

FEEDWATER LOOP A - WELDS:

Design Basis Break

20-FW-900-1	M4	20-FW-900-1	U1
20-FW-900-1	U2	14A-FW-900-1A	AA

Consequential Break

14A-FW-900-1	T2	14A-FW-900-1	T3
14A-FW-900-1	U7	14A-FW-900-1	U5
14A-FW-900-1	U6	14A-FW-900-1	V
14A-FW-900-1	VA	14A-FW-900-1	VB
14A-FW-900-1	V1	14A-FW-900-1	V2
14A-FW-900-1	V2A	14A-FW-900-1	V2B
14A-FW-900-1	W	14A-FW-900-1A	X
14A-FW-900-1A	Y	14A-FW-900-1A	Z
14A-FW-900-1A	Z1	14A-FW-900-1A	Z2
14A-FW-900-1A	Z3	14A-FW-900-1A	Z4

FEEDWATER LOOP B - WELDS:

Design Basis Break

20-FW-900-1	A1	20-FW-900-1	F4
14B-FW-900-1B	N	14B-FW-900-1B	V

Consequential Break

14B-FW-900-1	F3	14B-FW-900-1	F5
14B-FW-900-1	F1	14B-FW-900-1	F2
14B-FW-900-1	G	14B-FW-900-1	G2
14B-FW-900-1	G1	14B-FW-900-1	G3
14B-FW-900-1	G4	14B-FW-900-1	H
14B-FW-900-1	HA	14B-FW-900-1	HB
14B-FW-900-1	H1	14B-FW-900-1	H2
14B-FW-900-1	H2A	14B-FW-900-1	H2B
14B-FW-900-1	J	14B-FW-900-1	K
14B-FW-900-1B	L	14B-FW-900-1B	M
14B-FW-900-1B	N1	14B-FW-900-1B	O
14B-FW-900-1B	01	14B-FW-900-1B	P

TABLE 1 (Cont.)

MAINSTEAM - COMPONENT SUPPORTS:

(*) MSU-35	MS-39	MS-167
(*) MS-34	MS-151	MS-153
(*) MS-35	MS-40	MS-44
(*) MS-47	(*) MS-41	(*) MS-149
MS-59	S13A	MS-45
MS-36	S13B	(*) MS-46
MS-37	MS-42	S23A
(*) MS-150	MS-43	S23B
MS-38		

FEEDWATER - LOOP A - COMPONENT SUPPORTS:

FWU-16	(*) FWU-21	FWU-25
FWU-17	FWU-22	(*) FWU-26
(*) FWU-18	FWU-23	(*) FWU-27
FWU-19	FWU-24	(*) FWU-28
FWU-20		

FEEDWATER - LOOP B - COMPONENT SUPPORTS:

FWU-36	FWU-33	FWU-40
FWU-35	FWU-31	(*) FWU-39
FWU-34	FWU-30	FWU-38
FWU-32	(*) FWU-29	FWU-37

FEEDWATER - MAIN - COMPONENT SUPPORTS:

FW-37	FW-40	FW-43
FW-38	FW-41	(*) FW-45
FW-39	FW-42	

FEEDWATER - RECIRCULATION LINE - COMPONENT SUPPORTS:

CD-167	CD-169
CD-168	(*) CD-170

NOTE: * = Integral Attachments

1.0 **General:**

1.1 The inspection and testing of all safety related snubbers shall be implemented and performed in accordance with Ginna Station Interface Procedure IP-IIT-5, "Snubber Inspection & Testing Program".

1.2 The Snubber Program Visual examinations that were performed under the ISI Program was removed from the ISI Program and returned to the Snubber Program after the 2007 Refueling Outage.

1.0 **General:**

1.1 This owner elected program for Seismic Category I supports outside of the ASME Class boundary was developed to provide greater assurance that identified component supports will operate when and if needed during a seismic event.

1.2 Seismic Category I supports outside of the ASME Class boundary are identified in Table 1.

2.0 **Examination Requirements:**

2.1 Selected Seismic Category I supports shall be examined utilizing visual (VT-3) examination techniques. Support selection shall be in accordance with IWF-2500 for Class 2 piping supports. This sampling scheme requires a 15% sample distributed among the systems and support types within each system.

3.0 **Examination Methods:**

3.1 The visual (VT-3) examination shall be performed in accordance with Section 1.

4.0 **Frequency of Examination:**

4.1 The selected sample may be examined at least once during the inspection interval.

5.0 **Examination Evaluation:**

5.1 The visual (VT-3) examination results shall be evaluated in accordance with IWF-3000.

5.2 Supports which do not meet the visual (VT-3) examination requirements shall be reported for evaluation and appropriate corrective action.

6.0 **Repair & Replacement Requirements:**

6.1 Repairs and Replacement shall be performed to the requirements of Section 12, the Repair and Replacement Program, as applicable.

7.0 **Scheduling:**

7.1 Scheduling of identified Seismic Category I supports shall be performed and controlled within the Inservice Inspection Program Plan (Supplement 1).

8.0 **Reports and Records:**

8.1 Reports and records generated on identified Seismic Category I supports shall conform to applicable requirements specified within Section 1 and Section 12.

Table 1

Seismic Category I Supports

Line Segment: AFW100

Support Number	Support Number	Support Number	Support Number
AFU-130	AFU-132	AFU-137	AFU-138
AFU-139			

Line Segment: AFW200

Support Number
AFU-88

Line Segment: AFW300

Support Number	Support Number	Support Number	Support Number
AFU-4	AFU-5	AFU-6	AFU-7

Line Segment: CVC100

Support Number
CVU-84

Line Segment: CVC200

Support Number	Support Number	Support Number	Support Number
CVU-125	CVU-126	CVU-129	CVU-130

Line Segment: CVC700

Support Number	Support Number
CVC-56	CVC-58

Table 1 (Cont.)

Seismic Category I Supports

Line Segment: CVC730

Support Number	Support Number
CVC-39	CVC-40

Line Segment: FW300

Support Number	Support Number	Support Number	Support Number
FWU-40	FWU-39	FWU-38	FWU-37
FWU-36	FWU-35	FWU-34	FWU-33
FWU-32	FWU-31	FWU-30	FWU-29
FWU-28			

Line Segment: FW301

Support Number	Support Number	Support Number	Support Number
FWU-16	FWU-17	FWU-18	FWU-19
FWU-20	FWU-21	FWU-22	FWU-23
FWU-24	FWU-25	FWU-26	FWU-27

Line Segment: MS300

Support Number	Support Number	Support Number	Support Number
MSU-35	MSU-59	MSU-60	MSU-51
MSU-52	MSU-53	MSU-54	MSU-47
MSU-48	MSU-49	MSU-50	MSU-56
MSU-57			

Line Segment: RHR300

Support Number	Support Number	Support Number	Support Number
RHU-86	RHR-87	RHU-90	RHR-91

Table 1 (Cont.)

Seismic Category I Supports

Line Segment: SAFW450

Support Number	Support Number	Support Number	Support Number
AFU-169	AFU-170	AFU-175	AFU-176
AFU-177			

Line Segment: SGB-300

Support Number	Support Number
BDU-21	BDU-23

Line Segment: SGB-400

Support Number	Support Number
BDU-26	BDU-27

Line Segment: SI100

Support Number
SIU-8

Line Segment: SI200

Support Number
SIU-55

Line Segment: SW1500

Support Number	Support Number	Support Number	Support Number
SWU-363	SWU-364	SWU-365	SWU-366

Table 1 (Cont.)

Seismic Category I Supports

Line Segment: SW2100

Support Number	Support Number	Support Number	Support Number
SWU-523	SWU-524	SWU-525	SWU-526
SWU-533	SWU-534		

Line Segment: SW2300

Support Number	Support Number	Support Number	Support Number
SWU-602	SWU-603	SWU-604	SWU-605
SWU-606	SWU-607		

Line Segment: SW2500

Support Number	Support Number	Support Number	Support Number
SWU-637	SWU-642	SWU-639	SWU-640
SWU-638			

1.0 **General:**

1.1 The purpose of this section is to provide information and clarification on additional inspection programs being performed at R. E. Ginna Nuclear Power Plant. These inspection programs may be due in part to ASME Section XI program requirements or to other commitments made by the Owner.

The following list identifies additional inspection programs being performed at R. E. Ginna Nuclear Power Plant:

* Steam Generator Tube Inspection Program
* Reactor Coolant Pump Flywheel Program

2.0 **Steam Generator Tube Inspection Program:**

2.1 **General:**

2.1.1 The Steam Generator Program incorporates the requirements of ASME Section XI Code, under Category B-Q, Item Number B16.20. The Code requires that Steam Generator tubing in U-Tube Design be volumetrically (Eddy Current) examined. The extent and frequency of examinations shall be governed by the Ginna Plant Technical Specifications.

2.1.2 The Steam Generator Program incorporates the requirements of NEI 97-06 and all mandated industry documents.

2.1.3 The Steam Generator Program also incorporates the guidelines of Appendix IV and ASME Code, Section XI, 1995 Edition, 1996 Addenda. Appendix IV establishes rules for the acceptance of Eddy Current equipment usage, data acquisition, and data analysis.

2.1.4 The Steam Generator Program is a self contained program as of December 2007.

2.2 **Inspection Program:**

2.2.1 The program for each inspection shall meet the requirements of the Ginna Technical Specifications.

2.3 **Examination Method:**

2.3.1 Eddy Current (Volumetric) Examination techniques shall be employed to perform the required examinations on Steam Generator tubes. Additional techniques may also be used to assure tube integrity.

2.4 **Frequency of Examinations:**

2.4.1 Examinations shall be performed in accordance with Ginna Plant Technical Specifications.

2.5 **Examination Evaluation:**

2.5.1 Eddy Current evaluation shall be performed in accordance with approved procedures.

2.6 **Repair, Replacement and Testing Requirements**

2.6.1 Repair criteria for steam generator tubes is based on the requirements of Regulatory Guide 1.121, "Bases for Plugging Degraded PWR Steam Generator Tubes".

2.6.1.1 Steam generator tubes that do not meet the Ginna Plant Technical Specifications Performance criteria shall be repaired by plugging or sleeving.

2.6.2 Repairs by welded plugs and sleeves shall be performed in accordance with Section 12, the Repair and Replacement Program.

2.7 **Scheduling:**

2.7.1 Eddy Current examination schedules of Steam Generator Tubes shall be established within the requirements of the Ginna Plant Technical Specifications.

2.8 **Reports and Records:**

2.8.1 Applicable records shall be maintained as specified within Section 1 and Section 12.

2.8.2 The results of the steam generator tube inservice inspection shall be submitted to the Nuclear Regulatory Commission in accordance with the Ginna Plant Technical Specifications.

3.0 **Reactor Coolant Pump Flywheel Program:**

3.1 **General:**

The original augmented Inservice Inspection Program for Reactor Coolant Pump (RCP) Flywheels incorporated the requirements of the USNRC Regulatory Guide 1.14, Revision 1, dated August 1975, entitled "Reactor Coolant Pump Flywheel Integrity".

Currently, Westinghouse WCAP-15666A, "Extension of Reactor Coolant Pump Motor Flywheel Examination" is incorporated into our Reactor Coolant Pump Flywheel Program. This change is consistent with the rational discussed in the WCAP and as adopted by the Commission via their SER dated 5 May 2003, as being in accordance with the criteria of Regulatory Guide 1.14 .

3.2 **Examination Requirements:**

3.2.1 Examinations shall be performed on all installed Reactor Coolant Pump (RCP) Flywheels. Installed RCP Flywheels shall either have a Ultrasonic (UT) examination over the volume from the inner bore of the Flywheel to the circle of one-half the outer radius or conduct a Ultrasonic (UT) and a Surface (MT and/or PT) examination of exposed surfaces defined by the volume of the disassembled Flywheels.

3.3 **Examination Method:**

3.3.1 Reactor Coolant Pump Flywheels shall be examined using Ultrasonic or Ultrasonic and Surface examination techniques.

3.3.2 Examinations defined in Step 3.3.1 shall conform to and be performed in accordance with Section 1 of this program.

3.4 **Frequency of Examinations:**

3.4.1 Examinations shall be performed on all installed Reactor Coolant Pump Flywheels on an interval not to exceed 20 years.

3.5 **Examination Evaluation:**

3.5.1 Examination evaluations shall be performed in accordance with Section 1 of this program.

3.5.2 Unacceptable examinations shall be reported for evaluation and appropriate corrective action.

3.6 **Repair & Replacement Requirements**

3.6.1 Repairs and Replacements shall be performed in accordance with Section 12, as applicable.

3.7 **Scheduling:**

3.7.1 Examination schedules shall be established within the Inservice Inspection Program Plan (Supplement 1).

3.8 **Reports and Records:**

3.8.1 Applicable records shall be maintained as specified in Section 1 and Section 12.

1.0 **Purpose:**

1.1 This Program establishes overall requirements for the implementation of the Inservice Inspection Program for Repairs and Replacements performed at R.E. Ginna Nuclear Power Station.

1.2 This Program is necessary to assure compliance with ASME Section XI Code as required by Title 10, Code of Federal Regulations, Part 50.55a.

1.3 This Repair and Replacement (R&R) Program shall be applicable to ASME Class 1, 2, and 3 pressure-retaining piping, bolting, components, and supports (including snubbers).

2.0 **References:**

2.1 ASME B&PV Code, Section XI, 1995 Edition, 1996 Addenda.

2.2 ASME B&PV Code, Section III, 1995 Edition, 1996 Addenda.

2.3 ASME B&PV Code, Section IX, current Edition, latest Addenda.

2.4 USNRC Generic Letters

2.4.1 Generic Letter 90-05, Temporary Non Code Repairs

2.5 Interface Procedure IP-CAP-1, Condition Reporting.

2.6 Interface Procedure IP-IIT-1, ASME Section XI, Class 1, 2 and 3 Repair & Replacement Process

2.7 USNRC, NRC Regulatory Issue Summary 2004-12 Clarification on use of later editions and addenda to the ASME OM and Section XI, dated July 28, 2004.

2.8 Fourth Interval Inservice Inspection (ISI) Program, R. E. Ginna Nuclear Power Plant Section 1 and Section 2.

2.9 Constellation Nuclear Generation Fleet Administrative Procedure CNG-AM-1.01-1020 Rev. 0000, ASME Section XI Repair/Replacement Program.

3.0 **Definitions:**

3.1 The following definitions are specific to this program. Other definitions that pertain to this program can be found within Interface Procedure IP-IIT-1.

3.2 Maintenance - those routine normal functions performed to maintain the operability of equipment and systems.

3.3 Ginna Owners Review Report (GORR) Form - is a mandatory form required by this program that addresses and documents all ASME Section XI requirements and related data for Code Repairs, Replacements, and Modifications performed at Ginna Station. This form shall be initiated by the Repair/Replacement (R/R) Engineer, Engineering Programs Group.

4.0 **Code Applicability:**

4.1 Repairs and Replacements on ASME Class 1, 2, and 3 shall be performed in accordance with the requirements of IWA-4000 of ASME Section XI, 1995 Edition, 1996 Addenda or latest approved revision within 10CFR50.55a provided that the Nuclear Regulatory Commission is notified in accordance with Reference 2.7 .

4.2 ASME Section XI Code Cases may be utilized as specified within Section 1 or as approved within the latest revision of Regulatory Guide 1.147 with any additional stipulations.

4.3 Approved applicable Relief Requests may be utilized as specified within Section 2.

4.4 Code Requirements and Owner's Requirements may be technical or administrative. Only technical requirements that could affect materials, design, fabrication, or examination, and affect the pressure boundary, or core support or component support function, need to be reconciled. Administrative requirements, i.e., those that do not affect the pressure boundary or core support or component support function, need not be reconciled. Examples of such requirements include quality assurance, certification, Code Symbol Stamping, Data Reports, and Authorized Inspection. The administrative requirements of either the Construction Code of the item being replaced or the Construction Code of the item to be used for replacement shall be met. Original Owner's Requirements, as applicable, shall be reconciled.

5.0 **Responsibilities:**

5.1 Responsibilities for the implementation of this Repair and Replacement (R&R) Program is defined within Interface Procedure IP-IIT-1.

6.0 **Exemptions:**

6.1 The following ASME Class 1, 2 and 3 Code Exemptions apply to Repair/Replacements, **except** as provided in 6.1.1:

1. Valve operators, controllers, position indicators, pump impellers, pump drivers, or other accessories and devices unless they have been classified as Code Class 1, 2, or 3 pressure retaining items in accordance with IWA-1320.

2. Instruments or permanently-sealed, fluid-filled tubing systems furnished with instruments, but do apply to instrument, control, and sampling piping when classified as Code Class 1, 2, or 3 in accordance with IWA-1320.

3. Rupture disk material (the requirements of IWA-4000 do not apply to the portion of a rupture disk holder that forms the pressure boundary).

4. Orifice plates not exceeding 1/2-inch nominal thickness that are used only in flow-measuring service.

5. Other than component supports of core supports, material that is not associated with the pressure retaining function of a component, such as shafts, stems, trim, spray nozzles, bearings, bushings, springs, wear plates, seals, packing, gaskets, valve seats, and ceramic insulating material and special alloys used as seal material in electrical penetration assemblies.

6. Component support items such as gaskets, seals, bushings, springs, compression spring end plates, bearings, retaining rings, washers, wear shoes, shims, slide plates, and hydraulic fluids.

7. For Class 1 items, NPS 3/8" and smaller is exempt but shall meet the requirements of 12.0.

8. For Class 2 or 3 items, NPS 1 and smaller is exempt but shall meet the requirements of 12.0.

6.1.1 The following additional requirements shall comply to exemptions stated in 6.1 as applicable.

1. Snubbers shall be examined and tested.

2. Applicable construction code requirements, such as design requirements for Class 1 valve stems, assuring adequacy of intervening elements in the component support load path, and nondestructive examination of springs for Class 1 component supports, shall be met.

6.2 Hydrostatic Testing Exemptions:

6.2.1 The following Repair or Replacements on ASME Class 1, 2, and 3 are exempt from hydrostatic testing requirements in accordance with Step 4.1:

a. Cladding repair/replacement activity.

b. Repairs to heat exchanger tube plugging or sleeving.

c. Piping, pump and valve repairs that do not penetrate through the pressure boundary.

d. Pressure Vessel Repairs where the repaired cavity does not exceed 10% of the minimum design wall thickness.

(NOTE: minimum design wall thickness is identified in ASME Section III or VIII, as applicable.)

e. Component connections, piping and associated valves that are 1" Nominal Pipe Size (NPS) and smaller.

f. Tube-to-tubesheet repair welds on the cladding.

g. Seal Welds

h. Mechanical joints for component connections, piping, tubing (except for heat exchanger tubing), valves, and fittings, NPS 1 and smaller.

7.0 **General R&R Program Requirements:**

7.1 This program shall meet the applicable requirements of ASME Boiler and Pressure Vessel Code, Section XI, 1995 Edition, 1996 Addenda for ASME Class 1, 2, and 3 pressure retaining components.

7.2 Later approved USNRC editions of ASME Section XI may be used provided that the Code Year and Addenda is documented within applicable records and the Nuclear Regulatory Commission is notified in accordance with Reference 2.7.

7.3 Installation of new systems are outside the scope of this program. New systems are installed under the requirements of ASME Section III.

7.4 A GORR Form shall be initiated and information documented by the Repair/Replacement (R/R) Engineer, Engineering Programs Group whenever an applicable Repair or Replacement is required under this Program. The R/R Engineer can record and/or provide reference to other documents that contain the applicable required information on the GORR Form. Interface Procedure IP-IIT-1 contains the GORR Form and other applicable Forms that may be used which implements a Code Repair or Replacement activity.

7.4.1 The Responsible Ginna Station organization shall ensure that Contractor work performed on Class 1, 2 or 3 components or systems meet all Program requirements.

7.5 Non-Code temporary repairs may be permissible in accordance with Generic Letter 90-05 and shall be coordinated by responsible Ginna Station organizations.

7.6 Prior to authorizing a Repair or the installation of an item used for Replacement, a Verification of Acceptability evaluation of the repair or item(s) to be used for the replacement including consideration of the cause of failure shall be performed.

8.0 **Program Initiation/Disposition:**

8.1 Program Initiation:

8.1.1 The following reasons may be cause to necessitate a repair or replacement under this program.

a. Indications exceeding the allowable limits of IWB-3000, IWC-3000, IWD-3000, IWF-3000, IWE-3000 or IWL-3000 of ASME Section XI, as detected during Preservice or Inservice Examinations.

b. Indications or other evidence of possible flaws observed during routine inspection, surveillance, preventive maintenance or any observation during an activity.

c. Changes in regulatory requirements.

d. Changes to improve equipment service, safety, or reliability.

e. Component damage, failure, or end of service life.

f. Resolution of "Condition" Reports.

8.2 Disposition:

8.2.1 Upon Program initiation on ASME Class 1, 2, or 3 items, in accordance with Step 4.1, any of the following three possible dispositions will require conformance to this program.

a. Repair

b. Replacement

c. Use-as-is

8.2.2 When Inservice or Preservice Examinations, or other activities detect a flaw on ASME Class 1, 2, or 3 items in accordance with Step 4.1, and that the item is determined to exceed the acceptance criteria by visual, surface, or volumetric examination techniques, a "use-as-is" disposition can be made based on an Engineering Analytical Evaluation as specified within IWB/C/D-3000. "Use as is" disposition for component supports can be made based on evaluation or test as specified within IWF-3000.

8.2.2.1 When the acceptance of a "use-as-is" Snubber Component disposition on ASME Class 1, 2 or 3 is based on "tests" under IWF-3122.3 of Step 4.1, the applicable tests(s) shall be performed and results documented.

8.2.2.2 A copy of all dispositioned "use-as-is" documentation for items under this program shall be forwarded to R/R Engineer, Engineering Programs Group and the ISI Program Manager, Corporate Engineering Programs. The ISI Program Manager or designee shall review and revise the Inservice Inspection Program Plan schedules, as applicable; to account for successive inspection requirements as specified within Section 1, 1.7.5.

9.0 **ANII Requirements:**

9.1 The ANII shall receive notification by the R/R Engineer, Engineering Programs Group or by a responsible Ginna Station organization for all Repairs and Replacements that are performed under this program.

9.1.1 The ANII shall be allowed access to applicable work areas and all Repair and Replacement records and work packages, including Contractors.

9.2 To ensure that a plant emergency Repair or Replacement is resolved quickly, the ANII can be notified verbally or by e-mail, in a timely manner, when an emergency situation exists.

10.0 **Repair & Replacement Requirements**

10.1 Applicability:

10.1.1 All Repairs and Replacements on ASME Class 1, 2, or 3, as applicable, shall be conducted in accordance with the requirements of this Program and IWA-4000.

10.1.2 An item to be used for Repair/Replacement activities shall meet the Owner's Requirements and the applicable Construction Code, to which the original item was constructed, except as provided in IWA-4221 (b) and (c).

10.2 Reconciliation:

10.2.1 Reconciliation of Construction Code and Owner's Requirements for Repairs and Replacements shall conform to IWA-4221.

10.2.2 Reconciliation of Components shall conform to IWA-4223.

10.2.3 Reconciliation of Material shall conform to IWA-4224.

10.2.4 Reconciliation of Parts, Appurtenances, and Piping Subassemblies shall conform to IWA-4225.

10.2.5 Reconciliation of Design Requirements shall conform to IWA-4226.

10.3 Verification of Acceptability

10.3.1 Prior to returning the item to service, Engineering shall evaluate the suitability of the item subjected to the repair / replacement activity. If the requirements for the original item are determined to be deficient, appropriate corrective provisions shall be included in the item Requirements and Design Specification, as applicable. Any such corrective provisions shall be consistent with the Construction Code or Section III, in effect at that time. The report of the evaluation shall be documented and maintained for the life of the plant.

10.4 Design Changes

10.4.1 Material. Design or Configuration Changes shall conform to IWA-4311.

10.4.2 The provisions of IWA-4312 shall apply for rerating whether or not there is accompanying physical work.

10.4.3 Piping Class 1 Mechanical joints shall conform to IWA-4320.

10.5 Welding, Brazing, Metal Removal and Installation

10.5.1 Welding, Brazing, Metal Removal and Installation of Repair and Replacement activities shall conform to IWA-4400.

10.5.2 Storage and handling of welding materials shall conform to IWA-4430.

10.5.3 Welder and Welder Qualification (including Welding, Welding Operators) shall conform to IWA-4400.

10.5.4 Alternative Welding Methods may be used in accordance with the requirements of IWA-4600.

10.5.5 Heat Exchanger Tube Plugging or Sleeving shall conform to IWA-4700.

10.6 Examination or Testing

10.6.1 Nondestructive Examination (NDE) shall be performed in accordance with IWA-4520.

10.6.2 ASME Section XI Preservice NDE Inspection and Testing shall conform to IWA-4530.

10.6.3 Pressure testing shall conform to IWA-4540, if not exempted.

10.6.4 The Work Order for Repairs or Replacements shall contain the Preservice NDE requirements as well as the Construction Code NDE Requirements utilized for the Activity.

11.0 Repair/Replacement Plans (Work Orders)

11.1 Repair/Replacement Plans (Work Orders) shall identify the following:

1. Applicable Section XI Code Edition, Addenda, and Code Cases
2. Construction Code Edition, Addenda, Code Cases, and Owner's Requirements used for the following:
   a. Construction of the item to be affected by the Repair/Replacement Activity
   b. Construction of the item to be installed by the Repair/Replacement Activity
   c. Performance of the Repair/Replacement Activities

11.1 (Con't)

3. The following items, when applicable to the specific Repair/Replacement Activity shall be documented.

   a. A description of any flaws and Nondestructive examination methods used to detect these flaws

   b. The flaw removal method, the method of measurement of the cavity created by removing a flaw, and reference points (IWA-2600), as well as the Surface examination of the cavity.

   c. The applicable weld procedure, heat treatment, nondestructive examination, tests and material requirements

   d. The applicable examination, test, and acceptance criteria to be used to verify acceptability

4. Description of the Repair/Replacement activities to be performed

5. Intended life of the item after completion of the Repair/Replacement activity, when less than the remainder of the previous design life of the item

6. Whether application of the ASME Code Symbol Stamp is required in accordance with IWA-4143

12.0 **Small Item Alternative Requirements:**

12.1 When repair or replacement is performed to ≤ 3/8" NPS for Class 1 or ≤ 1" NPS for Class 2 or 3, the following shall be used:

1. Items shall be procured in accordance with the requirements of IWA-4142 and the technical requirements of IWA-4200. For Section III items, the requirements of NA-3700 or NCA-3800 need not be met, provided the Owner's Quality Assurance Program provides measures to assure that material is furnished in accordance with the material specification and the applicable material requirements of Section III. A Repair/Replacement Plan, possession of a Certificate of Authorization, and an agreement with an Authorized Inspection Agency are not required for the organization constructing or fabricating these items.

12.1 (Con't)

2. Repair/Replacement activities shall be performed and documented in accordance with the requirements of IWA-4142 and the technical requirements of IWA-4400 and IWA-4520. A Repair/Replacement Plan, pressure testing, services of an Authorized Inspection Agency, and the completion of NIS-2 forms are not required.

3. If an item to be subjected to a repair/replacement activity does not satisfy the requirements of IWA-4000, the evaluation and corrective provisions of IWA-4160 apply.

4. The tests of IWA-4530 (b), (c), or (d) shall be performed for repair/replacement activities of affecting pump, valve, or snubber performance parameters.

13.0 **Reports/Records:**

13.1 Reports or Records shall conform to IWA-4180.

13.2 Reports, Records, or their equivalent shall be filed as specified by their implementing procedures.

13.3 As applicable, reports and records or their equivalent shall include but not be limited to the following on ASME Class 1, 2, or 3 of Step 4.1:

a. Filing index for the documents

b. Repair, Replacement Records and Reports, Programs and Plans (Condition Reports, WO etc.)

c. NDE Records and Procedures

d. System Pressure Testing Records

e. Wall and Member Thickness Verification Records

f. Tube plugging/sleevinq records

g. Ginna Owner Review Report (GORR) Form

13.3 (Con't)

h. Original Construction Specifications or Bills of Materials, (including authorized manufacturing and installation changed.)

I. Design Specification (Criteria)

j. Verification of Acceptability

k. Welding and Heat Treating Records

l. Test Records

m. Material Certification

n. Replacement Part(s) Manufacturer Data Report (i.e. component data sheets)

o. Overpressure Protection Report (as defined on design outputs)

p. Fabrication and Installation records

q. Maintenance Records (WO, etc.)

r. Stress/Seismic Analysis

s. Preservice and Inservice Inspection Reports

t. Form NIS-2

u. Evaluations required by IWA-4311

v. Report of Reconciliation

13.3.1 Revisions or updates to existing reports, records and specifications shall be traceable to and from the original record or report to provide a record of the current status of the item. The review and certification requirements for these revisions or updates shall be in accordance with the Owner's Requirements and the Construction Code.

CONTAINMENT PROGRAM

Prepared by: Frank A. Klepacki 1/4/2008
ISI Engineer (Site) Date

Reviewed by: Gary E. Jon 1/7/2008
Appendix J Test Program Engineer Date

Reviewed by: Leo Sucheski 1/8/2008
Registered Professional Engineer –Site (IWL) Date
NYS #062465

1.0 Introduction

The NRC has issued a final rule amending 10CFR50.55a, Codes and Standards, effective September 9, 1996. In the past, ASME Section XI, Subsections IWE and IWL were not referenced in 10CFR50.55a. However, the revised regulation references the 1992 Edition through 1992 Addenda of ASME Section XI, Subsection IWE (Class MC and Metallic Liners of Class CC Components) and Subsection IWL (Class CC Concrete Components). The revised regulation contains several modifications and supplemental requirements that affect implementation of the ASME Section XI, IWE/IWL and as applicable IWA requirements, by the required date of September 9, 2001.

1.1 General

1.1.1 This Program outlines the First IWE and IWL Inservice Inspection (ISI) Interval requirements for Class MC systems and components, and the metallic liners of Class CC components, and the requirements for Class CC systems and components for R. E. Ginna Nuclear Power Plant. The program applies to systems which, if built today, would be within the scope of ASME Section III, Class MC and CC. The first IWE and IWL Inspection Period as identified within the Rulemaking ends September 9, 2001. The first IWE and IWL Inservice Inspection (ISI) Intervals ends September 9, 2008. The first IWL Tendon Inspection Program examination will be performed in the year 2000 (+/- 1 yr.). The first Concrete Inspection Program examination will be performed in the year 2000 (+/- 1 yr.). Both the Tendon and Concrete examinations shall be reexamined within the five (5) year interval after these dates.

1.1.1.1 The examinations and system pressure tests required by IWA and IWE will be completed during each inspection interval for the service lifetime of R. E. Ginna Nuclear Power Plant. In accordance with IWA-2400, examinations shall be performed under Inspection Program B of IWA-2420 and IWE-2400. This inspection program is defined as follows:

1. <u>1st Inspection Interval</u> Ending September 9, 2008, a date based on NRC requirements for expedited examination.

2. <u>Subsequent Inspection Intervals</u> 10 years following the 1st inspection interval.

1.1.1.2 This Program Plan describes requirements for the first inspection interval. The examinations required by IWA and IWL shall be completed during each inspection interval for the service lifetime of R. E. Ginna Nuclear Power Plant. Examinations will be performed in accordance with the Inservice Inspection schedule described in IWL-2400. This inspection program is defined as follows:

1. 1st Inspection Interval 5 years following the year 2000 (A five year anniversary the initial Structural Integrity Test) ending on September 9, 2008.

2. Subsequent Inspection Intervals 5 years following each inspection.

1.1.2 The implementation of this Containment Inservice Inspection (ISI) Program can be found in the Inservice Inspection Program Plan for R. E. Ginna Nuclear Power Plant.

1.1.3 For existing plant components and/or items, 50.55a(g)(4) allows exemption from the design and access provisions outlined in the ASME Section XI Code (e.g. IWA-1500). When design and/or accessibility limitations are identified, a request for relief from the applicable provision is not required provided the limitations are identified in the Inspection Program.

1.1.4 The program plan components have been classified by R. E. Ginna Nuclear Power Plant for purposes of Inservice Inspection based on definitions contained in 10CFR50.2, Regulatory Guide 1.26, ANS 51.1 and as defined by Engineering.

1.2 Applicable Documents / References

1.2.1 ASME Boiler and Pressure Vessel Code

1.2.1.1 American Society of Mechanical Engineers (ASME) Boiler and Pressure Vessel Code, Section XI, Rules for Inservice Inspection of Nuclear Power Plant Components, 1992 Edition with the 1992 Addenda (Note: and as modified by 10CFR50.55a.)

1.2.1.2 ASME Code, Section XI, Subsection IWE Commentary (Dated May 5, 1998)

1.2.1.3 ASME Code, Section XI, Subsection IWL Commentary (Dated April 24, 1998)

1.2.2 **Regulatory Documents**

1.2.2.1 Part 50.55a, Codes and Standards, of Title 10 of the Code of Federal Regulation (50.55a)

1.2.2.2 Appendix J, Part 50 of Title 10 of the Code of Federal Regulation.

1.2.2.3 SECY-96-080, Issuance of Final Amendment to 10 CFR 50.55a to Incorporate by Reference the ASME Boiler and Pressure Vessel Code, Section XI, Division 1, Subsection IWE and Subsection IWL (Dated April 16, 1996)

1.2.2.4 Nuclear Regulatory Commission (NRC) Inspection Procedure 62003, Inspection of Steel and Concrete Containment Structures at Nuclear Power Plants (Dated June 1997)

1.2.2.5 IN 97-29, Containment Inspection Rule (Dated May 30, 1997)

1.2.2.6 Regulatory Guide 1.147, Inservice Inspection Code Case Acceptability, ASME Section XI, Division 1

1.2.2.7 Regulatory Guide 1.35, Revision 2, "Inservice Inspection of Ungrouted Tendons in Prestressed Concrete Containment Structures"

1.2.2.8 Regulatory Guide 1.163, dated September 1995, "Performance-Based Containment Leak-Test Program"

1.2.2.9 Letter from Mr. Lawrence Shao (Director, Division of Engineering Technology, Office of Nuclear Regulatory Research) to Mr. Robert Sammataro, Subject - Clarification of the Implementation Schedule for ISI of Concrete Containments (Dated July 10, 1997)

1.2.2.10 Letter from Mr. Brian Sheron (Director, Division of Engineering, Office of Nuclear Reactor Regulation) to Mr. Alex Marion, Subject - Responses to NEI's Topics and Specific Issues Related to Containment Inspection Requirements (Dated May 30, 1997)

1.2.2.11 USNRC, NRC Regulatory Issue Summary 2004-12 Clarification on use of later editions and addenda to the ASME OM and Section XI, dated July 28, 2004.

1.2.3 **References**

1.2.3.1 ACI 201.1R-68, "Guide for Making a Condition Survey of Concrete in Service"(Revised 1984).

1.2.3.2 ACI 349.3R-96, "Evaluation of Existing Nuclear Safety-Related Concrete Structures".

1.2.3.3 Rochester Gas and Electric Corporation, R. E. Ginna Nuclear Power Station, EWR 5190; "C. V. Liner Evaluation" Dated 10/92.

1.2.3.4 EPRI, Containment Inspection Program Guide (ASME Section XI, Subsections IWE & IWL), GC-110698, September 1998.

1.2.4 **Relief Requests**

Applicable ASME Section XI Relief Requests are identified and contained within Section 2 of the Inservice Inspection Program.

1.2.5 **Code Cases**

Applicable ASME Section XI Code Cases are identified and contained within Section 1, Paragraph 1.2.3.1 of the Inservice Inspection Program.

1.2.6 **Code Tables**

Applicable ASME Section XI Code Tables that identifies Category and Item Numbers are contained within Section 4 of the Inservice Inspection Program.

1.2.7 **Allocation Tables**

Applicable ASME Section XI Allocation Tables that identifies Category and Item Numbers examination distribution may be contained within Section 6 of the Inservice Inspection Program.

1.3 **Definitions:**

1.3.1 Accessible Areas - those areas of the containment leak tight surface or internal attachments that can be examined either directly or remotely (line of sight) without installation of temporary means (scaffolding or ladders) to accomplish the examination.

1.3.2 Coating - this term applies to coatings (including paints) that are used to protect an ASME Code Class MC component against corrosion.

1.3.3 Containment Structural Integral Attachment - attachments that have a containment pressure retaining function or are in the containment vessel support load path and are welded, cast, or forged integrally to the inside or outside surface of the containment pressure retaining component.

1.3.4 Containment Component - as applied to IWE or IWL the term component refers to a part that is designed to support the load of the containment inside pressure in the event of a reactor coolant or main steam system leak, such as, containment vessels, vent systems, airlock/equipment hatch, and etc.

1.3.5 General Visual Examination - a visual examination performed either directly or remotely (line of sight) with sufficient illumination and resolution suitable for the local environment to assess general conditions that may affect either the structural integrity or leak tightness of the pressure retaining component.

1.3.6 Leak Tight - the ability of a component to maintain a prescribed maximum leakage rate under service conditions.

1.3.7 Liner - a permanent metal membrane attached to the surface of a concrete containment or penetration in order to form a leak tight enclosure.

1.3.8 Nonstructural Containment Attachments (also referred to as Minor Permanent & Temporary Attachments) - those attachments that do NOT perform a pressure retaining function or are not in a containment vessel component's support load path. Nonstructural attachments include such items as, insulation supports, cable tray supports, piping supports, nameplates, locating and lifting lugs, lighting supports, and walkway supports.

1.3.9 Pressure Retaining - this term applies to components that are necessary to maintain a pressure difference across its boundary.

1.3.9.1 Items such as seals, packing, gasket, wear plates, and materials used for electrical conduction and insulating functions in electrical penetrations assemblies are NOT considered pressure retaining.

1.3.10 Primary Containment Structure - this term applies to the principal enclosures (e.g., containment vessel, access closures, penetration sleeves, appurtenance, and etc.) that acts as a leakage barrier, after the reactor coolant pressure boundary, to control the release of radioactive material from the fuel in the reactor core under design basis accident conditions.

1.3.11 Structural Integrity - the ability of a structure or component to withstand prescribed loads.

1.4 Responsibility

1.4.1 Overall Responsibility

1.4.1.1 As specified in paragraph IWA-1400 of ASME Section XI, the Owner bears the overall responsibility for implementation of an ISI program. Administrative Procedures, Technical Procedures, and NDE Programs and Plans are in place to control and implement these Inservice Inspection requirements.

1.4.1.2 This Program does not require prior Nuclear Regulatory Commission approval as specified within the Rulemaking.

1.4.2 Engineering:

1.4.2.1 Corporate Engineering Inservice Inspection (ISI) Program Manager or designee shall be responsible for the following:

1. Development of a Containment Inspection Program in accordance with applicable ASME Section XI Code requirements and applicable modifications and limitations specified in CFR 50.55a.

2. Coordination of implementation with the site Responsible Engineer (Registered Professional Engineer) for Subsection IWL Code requirements.

3. Ensure that the Inspection Plan(s) are correct for implementation at the site and provide applicable Inspection Plan(s) to the Site Inservice Inspection (ISI) Program Engineer in a timely manor.

Section 1.4.2.1 continued:

4. Ensure examinations are properly scheduled to comply with the applicable examination frequency and extent requirements outlined within ASME Section XI Code and/or Rulemaking modifications.

5. Ensure the proper disposition of components or items requiring acceptance by engineering evaluation or corrective action.

6. Ensure the proper examination expansion based upon engineering evaluation and Code requirements.

1.4.3 Site Inservice Inspection (ISI) Program Engineer or designee shall be responsible for:

1. Implement the Inspection Plan provided by Corporate Engineering Programs at the site.

2. Ensure that the ISI Inspection Plan and Inservice Inspection (ISI) Summary Reports for IWE/L have been properly prepared and/or submitted to the enforcement and/or regulatory authorities having jurisdiction at the plant site.

1.4.4 Site Repair/Replacement (R/R) Engineer or designee shall be responsible for:

1. Review Work Orders to ensure compliance with ASME Section XI Code IWA-4000.

2. Ensure that applicable Code Repair and Replacements for IWE/L have been properly prepared and submitted to the enforcement and/or regulatory authorities having jurisdiction at the plant site.

1.4.5 Site Applicable Nuclear Engineering Services Manager or designee shall be responsible for the following:

1. Ensure that components have been properly classified as ASME Code Class MC or CC.

2. Ensure the proper disposition of components or items requiring acceptance by engineering evaluation or corrective action.

Section 1.4.5 continued:

3. Ensure that the required engineering evaluations or required reports are prepared.

4. As specified in paragraph IWL-2320 of ASME Section XI, the Responsible Engineer for Subsection IWL shall be a Registered Professional Engineer (RPE) experienced in evaluating the Inservice condition of structural concrete.

1.4.5.1 The Site Registered Professional Engineer (RPE) for Subsection IWL shall be responsible for:

1. Assist in the development of acceptance standards for ASME Code Class MC components when the Code does not address these criteria.

2. Initial development of inspection plan and schedule for the examination of ASME Code Class CC components. The inspection plan will be turned over to the Corporate Engineering Inservice Inspection (ISI) Program Manager to maintain.

3. Develop and maintain procedures and acceptance standards for the examination of ASME Code Class CC components.

4 Coordinate with the NDE Corporate Level III or designee to provide instruction and training of examination personnel of ASME Code Class MC and CC components.

5. Evaluation of recordable examination results and unacceptable examination results pertaining to ASME Code Class MC and CC components. This individual shall also perform an evaluation that identifies expanded examination requirements and accessible evaluations.

6. Code Repair and Replacement instructions on ASME Code Class CC components.

7. Perform or delegate the generation of applicable reports and evaluations, including NIS-1, OAR-1, NIS-2, or NIS-2A reports for IWE and IWL to the Site ISI Engineer 45 days after startup for incorporation within the 90 Day Report or applicable code forms.

8. Development of plans and procedures for examination of concrete surfaces.

Section 1.4.5.1 continued:

9. Instruction, training and approval of concrete examination personnel.

1.4.5.2 The Site Appendix J Test Program Engineer or designee shall be responsible for the following:

1. Maintain components to the requirements specified within paragraph 1.2.2.2 .

2. Ensuring compliance with Code Repair and Replacement requirements and associated VT-2 examination and Preservice Inspections as applicable.

3. Ensuring compliance with IWA-1400, IWA-2420 and IWA-6000 of the ASME Section XI Code and Rulemaking.

4. Perform or delegate the generation of Summary Reports (NIS-1 or OAR-1) that conforms to IWA-6000. The report shall be submitted to the Site ISI Engineer within 60 days after each scheduled outage.

5. Ensure conformance with Appendix F Supplement 5 of ASME Section XI Code that deals with required component information for the Appendix J computer program .

6. Incorporation of applicable ISI Program Relief Requests as applicable.

7. Ensure that a schedule and subsequent revisions of Appendix J Outage Tests be provided to the ANII and the Site ISI Engineer.

8. Ensure that Appendix J Test results are submitted, reviewed and accepted by the ANII within 60 days after a scheduled Outage startup.

1.5. Authorized Inspection Agency

1.5.1 An Authorized Nuclear Inservice Inspector (ANII) shall be utilized as specified within ASME Section XI Code.

1.5.2 For "Repairs and Replacements", the ANII shall be involved to the extent specified by the Code and notified prior to the start of Repair or Replacement Code activities.

Section 1.5 continued:

1.5.3 For Concrete Repairs and Replacements, the ANII shall be notified and the services of an ANI may be obtained for the work activity as determined by the ANII.

1.6 **Records and Reports:**

1.6.1 Examination and test records and documentation of results provide the basis for evaluation and facilitate comparison with previous results and subsequent inspections. In accordance with Section XI, IWA-6000, these records will be maintained for the service lifetime of the component or system.

1.6.1.2 As required by IWA-6340, the following records shall be maintained;

1. an index to record file
2. Preservice and Inservice inspection plans and schedules
3. Preservice and Inservice inspection reports
4. repair/replacement records and reports
5. nondestructive examination procedures
6. nondestructive examination records, including radiographs and review forms
7. pump records and reports
8. valve records and reports
9. pressure test procedures
10. pressure test records

1.6.2 An Inservice Inspection Report shall be generated to document applicable Inservice Inspection and associated Repair and Replacement activities.

1.6.3 ASME Section XI Code applicable NIS-1, OAE-1, NIS-2, or NIS-2A forms or equivalents shall be prepared and submitted to the Nuclear Regulatory Commission, as required.

1.6.4 The Registered Professional Engineer or designee for IWL (Concrete Containment and Tendons) activities shall generate required Code documents, reports and engineering evaluations and submit these documents to Corporate Engineering Programs or designee for incorporation within the 90 Day Report or applicable code forms as identified within paragraph 1.6.3. The Site ISI Engineer will arrange submittal to the Nuclear Regulatory Commission, as required.

1.6.5 The Corporate Engineering Programs or designee shall be responsible to generate required Code documents. The Site ISI Engineer will arrange submittal to the Regulatory Commission for IWE (Metal Containment) activities.

1.6.6 The Appendix J Test Program Engineer or designee shall generate required Code documents and reports as applicable and submit these documents to Corporate Engineering Programs or designee for incorporation within the 90 Day Report or applicable code forms. The Site ISI Engineer will arrange submittal to the Nuclear Regulatory Commission, as required.

1.7 **Inaccessible Surface Areas**

1.7.1 Inaccessible surface areas of components or items are exempted from examination provided they have met the requirements of the original Construction Code and/or Design Specification. Examples of surface areas that are considered inaccessible are listed below.

1. Surface areas that are permanently embedded in concrete.

2. Surface areas covered by insulation that is permanently sealed to prevent the intrusion of moisture.

3. Surface areas sealed by a moisture barrier that is designed to prevent intrusion of moisture.

4. Access, for the examination personnel and equipment to conduct the direct visual examination of the surface area, is permanently obstructed.

5. Concrete surface areas that are covered by the metallic liner, foundation material, or backfill.

6. Access to the surface areas would require removal of existing plant equipment or structure and the original design did not provide sufficient space for the removal and storage of plant equipment or structure.

7. Access to the surface area would require removal of existing plant equipment or structure and the original design did not provide for permanently installed handling machinery (e.g. hoists) to facilitate removal, disassembly, and storage.

8. Concrete basement floor covering the IWE metallic liner.

1.8 Examination Methods

Examination methods utilized to satisfy Code examination requirements have been listed for nonexempt Class CC components, Class MC systems and components and the metallic liners of Class CC components. Provided below is a definition of the examination methods which will be performed to satisfy the Code requirements. Personnel performing nondestructive examinations will be qualified in accordance with written procedures prepared as required by Paragraph IWA-2300 and IWL-2300 of ASME Code Section XI or as altered by the Rulemaking or as modified by Relief Requests.

1.8.1 Visual Examination Method

1.8.1.1 **For IWE,** Visual examinations (VT) will be performed in accordance with IWA-2210 and IWE-3510 of ASME Section XI. IWA-2210 and IWE-3510 define types and extent of VT examinations as follows:

(1) General Visual examinations are conducted either directly or remotely with sufficient illumination (natural or artificial) and resolution suitable for the local environment to assess the general condition of the containment surfaces from permanent vantage points, e.g. floors, roofs, platforms, ladders, etc. The objective of this examination is to detect evidence of damage, deterioration, etc. that may affect either containment structural integrity or leak tightness.

(2) VT-3 examinations are conducted to determine the general mechanical and structural condition of components such as the presence of loose parts, debris, or abnormal corrosion products, wear, erosion, corrosion, and the loss of integrity at bolted or welded connections as defined in IWA-2213.

(3) VT-1 examinations are conducted to determine the condition of the part, component, or surface examined. The examination shall determine conditions such as cracks, wear, corrosion, erosion, or physical damage on the surfaces of the parts or components. This type of examination may be performed by direct or remote methods as defined in IWA-2210/2211.

1.8.1.2 For IWL, Visual examinations (VT) will be performed in accordance with IWA-2210 and IWL-2300 of ASME Section XI. The three types of VT examinations are as follows:

(1) VT-1 examinations are conducted to determine the condition of the part, component, or surface examined. The examination shall determine conditions such as cracks, wear, corrosion, erosion, or physical damage on the surfaces of the parts or components. This type of examination may be performed by direct or remote methods as defined in IWA-2210/2211.

(2) VT-1C examinations are conducted to determine concrete deterioration and distress for suspect areas detected by VT-3C, and conditions (e.g., cracks, wear, or corrosion) of tendon anchorage or strands. Minimum illumination, maximum direct examination distance, and maximum procedure demonstration lower case character height shall be as specified in IWA-2210 for VT-1 visual examination.

(3) VT-3C examinations are conducted to determine the general structural condition of concrete surfaces of containment by identifying areas of concrete deterioration and distress, such as defined in ACI 201.1 R-68 or ACI 349.3R-96. The minimum illumination, maximum direct examination distance, and maximum procedure demonstration lower case character height shall be as specified in IWA-2210 for VT-3 visual examination.

1.8.2 **Volumetric Examination Method**

1.8.2.1 For IWE, a volumetric examination is performed to detect discontinuities in the volume of a material and material thickness. Ultrasonic (UT) examinations will be conducted as required in accordance with IWE-2500(c)(4). The UT examinations will be performed utilizing either manual or mechanized UT techniques.

1.8.3 **Acceptance Criteria**

1.8.3.1 Acceptance Criteria for IWE shall conform to ASME Section XI Code requirements. If acceptance criteria is not defined, R. E. Ginna Nuclear Power Plant shall develop acceptance criteria as specified by the Code by a Responsible Engineer and/or Level III Examiner.

1.8.3.2 For Bolting examinations, the Code material specification shall not be used as the acceptance criteria. Class 1 Category B-G-1 or B-G-2 as applicable shall be used for bolting visual acceptance criteria.

1.8.3.3 Acceptance Criteria for IWL shall conform to ASME Section XI Code requirements. If acceptance criteria is not defined, R. E. Ginna Nuclear Power Plant shall develop acceptance criteria as specified by the Code by the Registered Professional Engineer.

1.8.4 **Alternative Lighting and Resolution**

1.8.4.1 As permitted by the Rulemaking [10 CFR 50.55a(b)(2)(x)(B)], when performing remotely the visual examinations required by IWE, the maximum direct examination distance specified in Table IWA-2210-1 may be extended and the minimum illumination requirements specified in Table IWA-2210-1 may be decreased provided that the conditions or indications for which the visual examination is performed can be detected at the chosen distance and illumination.

1.9 **Repair or Replacement Activities**

1.9.1 Associated Repairs or Replacement activities on associated IWE or IWL items or components shall conform to rules and requirements of ASME Section XI Code, 1992 Edition with the 1992 Addenda.

1.9.2 Repair or Replacement Rules for items or components are not applicable for seals, gaskets, moisture barriers or Post-Tensioning System grease caps and installation screws.

1.9.3 The removal or reapplication of paint or coatings are not considered a Code Repair or Replacement activity. Applicable Code visual examinations shall be performed prior to the removal of the paint or coating and a visual Preservice examination shall be performed after the reapplication.

1.9.4 See Section 14 for IWE and IWL Repair and Replacement Requirements.

2.0 CLASS MC PROGRAM (IWE)

2.1 Basis for Preparation

2.1.1 Preparation of the Class MC program was based on the requirements of Articles IWA-1000, IWA-2000, IWE-1000 and IWE-2000 of Section XI. These Articles provide rules and guidelines for exemptions, inspection schedules, and examination requirements for Class MC pressure retaining components and their integral attachments. These requirements may have been modified as specified within the Rulemaking or applicable Relief Requests.

2.1.2 For ASME Section XI Code, Category E-P, the existing 10 CFR 50 Appendix J Program, Option B shall be utilized. Ginna Station Appendix J Option B Program shall be performed in accordance with this program and documented as specified within the Code and this Program.

2.1.2.1 The Appendix J computer database shall conform to ASME Section XI requirements as applicable.

2.1.3 As required by the Rulemaking [10 CFR 50.55a(b)(2)(x)(E)] a general visual examination shall be performed once each period.

2.2 Components Subject to Examination

2.2.1 Based on the requirements of Section XI, the following Class MC systems, nonexempt pressure retaining components and their integral attachments will be subject to examination during the first inspection interval:

2.2.1.1 **Vessels**

Containment Metallic Liner that is not permanently sealed and covered by insulation. These areas include the following:

1. NonInsulated Containment Dome Area.
2. Associated Liner for the Fuel Transfer Penetration
3. Sump "A" applicable areas

2.2.1.2 **Penetrations**

1. Process Piping and Spare Penetrations
2. Electrical Penetrations
3. Personnel Hatch Penetration
4. Equipment Hatch Penetration
5. Fuel Transfer Penetration

2.2.1.3 **Items**

1. Associated Bolting Penetrations
2. Moisture Barriers

2.2.1.4 **Pressure Tests (Appendix J)**

1. Metallic Liner Boundary Repairs, Replacements or Modifications (Type B or C Tests)
2. Containment Penetration Bellows (Type B Test)
3. Airlocks (Type B Test)
4. Seals and Gaskets (Type B Test)

2.2.1.5 **Paint and Coatings**

1. Visual Examination of Paint or Coatings prior to Removal
2. Visual Examination of Paint or Coatings after application (Baseline)

2.3 Exemption Criteria

Certain Class MC components are exempt from examination. The following criteria is used to exempt components from visual and volumetric examination and testing in accordance with Section XI:

Exemption Criteria	Reference
Vessels, parts and appurtenances that are outside the boundaries of the containment as defined in the Design Specifications.	IWE-1220(a)
Embedded or inaccessible portions of containment vessels, parts and appurtenances that meet the requirements of the original Construction Code.	IWE-1220(b)
Piping, pumps, and valves that are part of the containment system, or which penetrate or are attached to the containment vessel.	IWE-1220(d)
Pressure retaining similar and dissimilar metal welds. (Categories E-B and E-F)	10CFR50.55a(b)(2)(x)(C)
Seals and gaskets	Relief Request No. 9
Torque or tension testing of bolted connections that have not been disassembled and reassembled during the inspection interval.	Relief Request No. 11

2.4 Technical Specification Requirements

This Program satisfies the program requirements of 10 CFR 50 Appendix J as identified within Technical Specifications. The existing Containment Leakage Rate Testing Program (Appendix J, Option B) satisfies the requirements (including personnel qualifications) of Examination Category E-P.

2.5 **Inservice Inspection Program Plan Tables**

The Inservice Inspection Program Plan lists examination requirements for Class MC components per the 1992 Edition of Section XI with Addenda through 1992 as modified by 10CFR50.55a and Relief Requests. These requirements shall be satisfied during the first inspection interval.

2.6 **Examinations**

2.6.1 **Augmented Examinations**

2.6.1.1 Areas meeting the selection criteria of IWE-1240 will receive augmented examination. Other areas may be added as conditions warrant. Areas may be removed from Augmented Examination status as permitted by IWE-2420(c). Results of augmented examinations in accessible areas will be evaluated for their potential to affect inaccessible areas. The results of this evaluation will determine the scope and extent of augmented examinations in the inaccessible areas.

2.6.1.2 After Engineering evaluation, no areas have been identified that warrants an Examination in accordance with IWE-1240:

2.6.2 **Additional Examinations**

2.6.2.1 As allowed by the Rulemaking [10 CFR 50.55a(b)(2)(x)(D)] may be used as an alternative to the requirements of IWE-2430.

1. If the examinations reveal flaws or areas of degradation exceeding the acceptance standards of Table IWE-3410-1, an "Engineering" evaluation shall be performed to determine whether additional component examinations are required. For each flaw or area of degradation identified which exceeds acceptance standards, the following shall be included within the ISI Summary Report.

   a. A description of each flaw or area, including the extent of degradation, and the conditions that led to the degradation.

   b. The acceptability of each flaw or area, and the need for additional examinations to verify that similar degradation does not exist in similar components, and

   c. A description of necessary corrective actions

Section 2.6.2.1 continued:

2. The number and type of additional examinations to ensure detection of similar degradation in similar components.

2.7 **Engineering Accessible Evaluation**

2.7.1 As required by the Rulemaking [10 CFR 50.55a(b)(2)(x)(A)] Engineering shall evaluate the acceptability of inaccessible areas when conditions exist in accessible areas that could indicate the presence of or result in degradation to such inaccessible areas. For each inaccessible area defined, the following shall be included within the ISI Summary Report as specified within the Action Report.

1. A description of the type and estimated extent of degradation, and the conditions that led to the degradation

2. An evaluation of each area, and the result of the evaluation

3. A description of necessary corrective actions

2.8 **Records / Reports**

2.8.1 Records and reports shall be maintained as specified within Section 1.6 .

3.0 **Class CC Program (IWL)**

3.1 **Basis for Preparation**

3.1.1 Preparation of the Class CC program was based on the requirements of Articles IWA-1000, IWA-2000, IWL-1000 and IWL-2000 of Section XI. These Articles provide rules and guidelines for exemptions, inspection schedules, and examination requirements for Class CC pressure retaining components attachments. These requirements may have been modified as specified within the Rulemaking or applicable Relief Requests.

3.1.2 The rules and requirements of ASME Code, Subsection IWL do not apply to the following:

1. steel portions not backed by concrete
2. shell metallic liners
3. penetration liners extending the containment liner through the surrounding shell concrete.

3.1.3 As modified by the Rulemaking, the Tendon (post-tensioning) Program may be satisfied by examinations performed after September 9, 1996 as a result from a Tendon Program that was approved by the Nuclear Regulatory Commission prior to September 9, 1996. The existing Program shall be used in its entirety until the end of the first period on September 9, 2001. After September 9, 2001 the Tendon Program shall conform to ASME Section XI Code and as modified by the Rulemaking.

3.1.3.1 The existing Tendon Program utilized for the first period shall include the following examinations:

1. Tendon anchorage hardware and surrounding concrete shall be visually examined utilizing the VT-1 and VT-1C methods. These examinations shall conform to Code requirements including personnel qualifications.
2. Tendon grease caps shall be visually examined utilizing the VT-3 method as defined within the Rulemaking.

3.2 **Components Subject to Examination**

3.2.1 Based on the requirements of Section XI, the following Class CC systems' nonexempt pressure retaining components will be subject to examination during the first inspection interval:

3.2.2 **Concrete Containment**

Exterior Exposed Accessible Areas

Exterior Suspect Areas

3.2.3 **Post-Tensioning System**

Tendons

Wire or Strand

Anchorage Hardware and Surrounding Concrete

Corrosion Protection Medium

Free Water

Grease Caps [10 CFR 50.55a (b)(2)(ix)(A)]

3.3 **Exemption Criteria**

Certain Class CC components are exempt from examination. The following criteria will be applied to exempt components from visual examination and testing in accordance with Section XI:

Exemption Criteria	Reference
Tendon end anchorages that are inaccessible, subject to the requirements of IWL-2521.1	IWL-1220(a)
Portions of the concrete surface that are covered by the liner, foundation material, or backfill, or are otherwise obstructed by adjacent structures, components, parts, or appurtenances	IWL-1220(b)

3.4 **Technical Specification Requirements**

This Program satisfies the program requirements of the Tendon Program (Reg. Guide 1.35 Rev. 2) as identified within Technical Specifications. The existing Tendon Program (Reg. Guide 1.35 Rev. 2) satisfies the requirements (including personnel qualifications) of ASME Section XI Code as modified by the Rulemaking for the first period Code requirements. The additional requirements of 3.1.3.1 shall apply.

3.4.1 After September 9, 2001; the Tendon Program shall conform to the Code and Rulemaking requirements.

3.5 **Inservice Inspection Program Plan Tables**

The Inservice Inspection Program Plan lists examination requirements for Class CC components per the 1992 Edition of Section XI with Addenda through 1992 as modified by 10CFR50.55a and Relief Requests. These requirements shall be satisfied during the first inspection interval.

3.6 **Tendon Program**

3.6.1 The existing Tendon Program shall be acceptable for use during the first period as allowed by the Rulemaking. The additional requirements of 3.1.3.1 shall apply.

3.6.2 The Tendon Program shall conform to the Code and Rulemaking requirements after September 9, 2001.

3.6.3 The following Rulemaking requirements shall be applicable to the Tendon Program after September 9, 2001.

3.6.3.1 As required by the Rulemaking [10 CFR 50.55a(b)(2)(ix)(B)] when evaluation of consecutive surveillances of prestressing forces for the same tendon or tendons in a group indicates a trend of prestress loss such that the tendon force(s) would be less than the minimum design prestress requirements before the next inspection interval, an evaluation shall be performed and reported in the Engineering Evaluation Report as prescribed in IWL-3300.

3.6.3.2 As required by the Rulemaking [10 CFR 50.55a(b)(2)(ix)(C)] when the elongation corresponding to a specific load (adjusted for effective wires or strands) during retensioning of tendons differs by more than 10 percent from that recorded during the last measurement, an evaluation must be performed to determine whether the difference is related to wire failures or slip of wires in anchorages. A difference of more than 10 percent must be identified in the ISI Summary Report required by IWA-6000.

3.6.3.3 As required by the Rulemaking [10 CFR 50.55a(b)(2)(ix)(D)], the following conditions shall be reported, if they occur, in the ISI Summary Report required by IWA-6000.

1. The sampled sheathing filler grease contains chemically combined water exceeding 10 percent by weight or the presence of free water.

2. The absolute difference between the amount removed and the amount replaced exceeds 10 percent of the tendon net duct volume.

3. Grease leakage is detected during general visual examination of the containment surface.

3.7 Engineering Accessible Evaluation

3.7.1 As required by the Rulemaking [10 CFR 50.55a(b)(2)(ix)(E)] Engineering shall evaluate the acceptability of inaccessible areas when conditions exist in accessible areas that could indicate the presence of or result in degradation to such inaccessible areas. For each inaccessible area identified, the following shall be included within the ISI Summary Report

1. A description of the type and estimated extent of degradation, and the conditions that led to the degradation

2. An evaluation of each area, and the result of the evaluation

3. A description of necessary corrective actions

3.8 Records / Reports

3.8.1 Records and reports shall be maintained as specified within Section 1.6 .

1.0 **Purpose:**

1.1 This Program establishes overall requirements for the implementation of the Inservice Inspection Program for Repairs and Replacements of ASME Class CC and MC items performed at R.E. Ginna Nuclear Power Station.

1.2 This Program is necessary to assure compliance with ASME Section XI Code as required by Nuclear Regulatory Commission (NRC) Final Rule (10CFR50.55a) FR61 154, August 08,1996.

1.3 This Repair and Replacement (R/R) Program shall be applicable to ASME Class CC and MC concrete and metallic Containment items including integral attachments, post-tensioning items, and bolting.

2.0 **References:**

2.1 ASME B&PV Code, Section XI, 1992 Edition, 1992 Addenda for IWE, IWL, and applicable IWA Subsections.

2.2 ASME B&PV Code, Section III, 1995 Edition, 1996 Addenda

2.3 ASME B&PV Code, Section IX, current Edition, latest Addenda.

2.4 Interface Procedure IP-CAP-1, Condition Reporting.

2.5 Interface Procedure IP-IIT-6, ASME Section XI Containment Repair and Replacement Process.

2.6 NRC Final Rule (10CFR50.55a) FR61 154, August 08,1996.

2.7 EPRI, Containment Inspection Program Guide (ASME Section XI, Subsections IWE & IWL), GC-110698, September 1998.

2.8 USNRC, NRC Regulatory Issue Summary 2004-12 Clarification on use of later editions and addenda to the ASME OM and Section XI, dated July 28, 2004.

2.9 Constellation Nuclear Generation Fleet Administrative Procedure CNG-AM-1.01-1020, ASME Section XI Repair/Replacement Program.

3.0 **Definitions:**

3.1 The following definitions are specific to this program. Other definitions that pertain to this program can be found in Section 13 and within Interface Procedure IP-IIT-6.

3.2 Maintenance - those routine normal functions performed to maintain the operability of equipment and systems.

3.3 Ginna Owners Review Report (GORR) Form - is a mandatory form required by this program that addresses and documents all ASME Section XI requirements and related data for the Code Repairs, Replacements, and Modifications performed at Ginna Station. This form shall be initiated by the Site Repair/Replacement (R/R) Engineer, Engineering Programs Group.

4.0 **Code Requirements:**

4.1 Repairs and Replacements to metallic or concrete Containment items shall be performed in accordance with applicable requirements of IWA, IWE, and IWL of ASME Section XI, 1992 Edition, 1992 Addenda, and as described in Section 13, "Containment Program".

4.1.1 These items shall include as applicable;

a. Class MC Pressure Retaining Items and their Integral Attachments.

b. Metallic Shell and Penetration Liners of Class CC Pressure Retaining Items and their Integral Attachments in Light Water Cooled Plants.

c. Class MC Containment boundary Pressure Retaining bolting.

d. Reinforced Concrete and the Post-Tensioning Systems of Class CC Components.

4.2 ASME Section XI Code Cases may be utilized as specified within Section 1 or as approved within the latest revision of Regulatory Guide 1.147 with any additional stipulations.

4.3 Approved applicable Relief Requests may be utilized as specified within Section 2.

4.4 Repairs and installation of replacement items shall be performed in accordance with the Owner's Design Specification and the original Construction Code/Owners' Requirements of the component or system. Latter Editions and Addenda of the Construction Code or of Section III, either in their entirety or portions thereof, and Code Cases may be used. If repair welding cannot be performed in accordance with these requirements, the applicable requirements of IWA-4200, IWA-4400, or IWA-4500 may be used.

4.4.1 Items used for replacement shall meet the following requirements, unless the alternative of 4.4.2 is adopted: (1) the applicable Construction Code to which the original item was constructed; (2) the existing design requirements. If the original item was constructed without code requirements, the item to be used for replacement shall be in accordance with the design, fabrication, and examination requirements for the original item.

4.4.2 An item to be used for replacement may meet all or portions of the requirements of later Editions and Addenda of the Construction Code or Section III when the Construction Code was not Section III, provided that the following requirements are met:

(1) The requirements affecting the design, fabrication, and examination of the Item to be used for replacement are reconciled with the Owner's Specification through the Stress Analysis Report, Design Report, or other suitable method that demonstrates the item is satisfactory for the specified design and operating conditions.

(2) Mechanical interfaces, fits, and tolerances that provide satisfactory performance are compatible with system and component requirements.

(3) Materials are compatible with installation and system requirements.

4.5 Material shall conform to the requirements of either the original Design Specification or Section III. Material used in a component support may be repaired by welding, provided the material is listed in: (1) the original Construction Code or the original construction requirements; or (2) Table I-11.0, or I-13.0 of Section III, Division 1; or (3) a Code Case for welded fabrication under Subsection NF. When repair welding of P-1, P-3, P-12B, and P-12C materials by these requirements is impractical, the requirements of IWA-4500 may be used.

4.6 Verification of Acceptability:

4.6.1 Prior to authorizing a repair or the installation of an item to be used for replacement (including modifications), Engineering shall conduct an evaluation of the suitability of the repair or item(s) to be used for replacement including consideration of the cause of failure. In addition, when repair or replacement is required because of a failure of an item, the evaluation shall consider the cause of failure of the existing item to ensure that the selected repair or replacement item is suitable. When the cause of failure appears to be a deficiency in the specification for the existing item, the specification for the repair or the item to be used for replacement shall reflect appropriate corrective provisions. Any such corrective provisions shall be consistent with the relevant requirements of either the Construction Code / Owners' Requirements or ASME Section III, in effect at the time of specification revision. The report of this evaluation shall be made part of the record and be referenced on the GORR Form or attached to the Form.

5.0 **Responsibilities**

5.1 Responsibilities for the implementation of this Repair and Replacement (R/R) Program are defined within Interface Procedure IP-IIT-6.

6.0 **R&R Exemptions:**

6.1 Repair/Replacement Exemptions:

6.1.1 Repair/Replacement exemptions for metallic or concrete Containment items shall be in accordance with applicable requirements of IWA, IWE, and IWL of ASME Section XI, 1992 Edition, 1992 Addenda.

6.1.2 The following items are exempt from the Containment Repair and Replacement Program:

1. Seals
2. Gaskets
3. Moisture Barriers
4. Post-Tensioning System Grease Caps and installation screws

6.1.3 The removal or reapplication of paint or coatings are not considered a Code Repair or Replacement activity.

7.0 **General R&R Program Requirements:**

7.1 This program shall meet the applicability requirements of ASME Boiler and Pressure Vessel Code, Section XI, 1992 Edition, 1992 Addenda for metallic Containment items in accordance with IWE, IWL, and applicable IWA subsections.

7.2 Later approved NRC editions of ASME Section XI may be used as long as the Nuclear Regulatory Commission is notified in accordance with Reference 2.8.

7.3 Installation of new systems is outside the scope of this program. New systems are installed under the requirements of ASME Section III.

7.4 A GORR form shall be initiated and information documented by the R/R Engineer, Engineering Programs Group whenever an applicable Repair or Replacement is required under this Program. The R/R Engineer can record and/or provide reference to other documents that contain the applicable required information on the GORR Form. Interface Procedure IP-IIT-6 contains the GORR Form which implements a Code Repair or Replacement activity.

7.4.1 The Responsible Ginna Station organization shall ensure that Contractor work performed on Class MC or CC components or systems shall meet all Program requirements.

7.5 Prior to authorizing a Repair or the installation of an item used for Replacement, a Verification of Acceptability evaluation of the suitability of the repair or item to be used for replacement including consideration of the cause of failure shall be performed.

7.5.1 The evaluation of the Verification of Acceptability for Repairs or Replacements shall conform to the requirements of 4.6 .

8.0 **Program Initiation/Disposition:**

8.1 Program Initiation:

8.1.1 The following reasons may be cause to necessitate a repair or replacement under this program.

a. Indications exceeding the allowable limits of IWE-3000 or IWL-3000 of ASME Section XI, as detected during Preservice or Inservice Examinations.

b. Indications or other evidence of possible flaws observed during routine inspection, surveillance, preventive maintenance or any observation during an activity.

c. Changes in regulatory requirements.

d. Changes to improve equipment service, safety or reliability.

e. Component damage, failure or end of service life.

f. Resolution of "Condition" Reports.

8.2 Disposition:

8.2.1 Upon Program initiation on ASME Class CC and MC items, in accordance with Step 4.1, any of the following three possible dispositions will require conformance to this program.

a. Repair

b. Replacement

c. Use-as-is

8.2.2 When Inservice or Preservice Examinations, or other activities detect a service induced flaw on ASME Class CC or MC items in accordance with step 4.1, and that the item is determined to exceed the acceptance criteria by visual, surface, or volumetric examination techniques, a "use-as-is" disposition can be made based on an Acceptance by Evaluation by Engineering as specified within IWA-3000.

8.2.2.1 For Concrete Containment and Post-Tensioning System Items, Acceptance by Evaluation shall be performed in accordance with IWL-3112. –3212 or –3222. An Engineering Evaluation Report shall be developed by the Registered Professional Engineer (RPE) in accordance with IWL-3310.

8.2.2.2 For Metallic Containment Items, Acceptance by Evaluation shall be performed in accordance with IWE-3122.4, which requires an engineering evaluation.

8.2.2.3 A copy of all dispositioned "use-as-is" documentation for items under this program shall be forwarded to Corporate Engineering Programs or designee. The Corporate Engineering Programs or designee shall review and revise the Inservice Inspection Program Plan schedules, as applicable, to account for successive inspection requirements as specified within Section 1.

9.0 **ANI / ANII Requirements:**

9.1 An Authorized Nuclear Inspector (ANI) shall be utilized for repairs on concrete Containment.

9.2 An Authorized Nuclear Inservice Inspector (ANII) shall be utilized for repairs or replacements on metallic Containment or Post-Tensioning items.

9.3 The ANI/ANII shall receive notification by the R/R Engineer, Engineering Programs Group or by a responsible Ginna Station organization for all Repairs and Replacements that are performed under this program prior to the start of work.

9.4 The ANI/ANII shall be allowed access to applicable work areas and all Repair and Replacement records and work packages, including Contractors.

9.5 To ensure that a plant emergency Repair or Replacement is resolved quickly, the ANI/ANII can be notified verbally or by e-mail, in a timely manner, when an emergency situation exists.

10.0 **Repair Requirements**

10.1 Repair Applicability:

10.1.1 All Repairs to metallic or concrete Containment items, as applicable, shall be conducted in accordance with the requirements of this Program.

10.2 Additional Requirements:

10.2.1 Repairs Plans (Work Orders) on Concrete Reinforcing Steel, Concrete Containment or Post-Tensioning items shall be developed under the direction of a Registered Professional Engineer.

10.2.2 Work Orders shall conform to the requirements specified within 12.0.

10.2.3 Applicable Code requirements of 4.0 shall be performed.

10.3 Repair Welding/Metal Removing Requirements:

10.3.1 Storage and handling of welding materials shall be in accordance with IWA-4210.

10.3.2 Welding and Welder Qualification (including Welding Operators) shall be in accordance with IWA-4220.

10.3.3 Repairs by defect removal and/or rewelding shall be performed in accordance with IWA-4300 as applicable.

10.4 Leakage Testing:

10.4.1 Leakage Testing requirements for metallic or concrete Containment items shall be in accordance with IWE-5000 or IWL-5000, as applicable.

10.4.2 In accordance with Relief Request Number 12, a VT-2 leakage examination is not required but a Detailed Visual Examination (VT-1) shall be performed, as applicable, when repairs or replacements are performed to metallic Containment items under this program.

10.4.3 A Pressure Test report shall be prepared under the direction of a Registered Professional Engineer in accordance with IWL-5300 for Containment Concrete items or Post-Tensioning items.

10.5 Repair, Construction and Preservice Examination Requirements:

10.5.1 An inspection shall be performed on the excavated cavity prior to final welding or leaving the repair cavity alone on areas that contained service induced rejectable flaws.

10.5.2 The examination that originally detected the flaw shall be performed after completion of the repair.

10.5.3 Applicable Construction Code / Owners' Requirements NDE shall be performed.

10.5.4 In accordance with IWA-4800, applicable ISI Preservice examination(s) shall be performed prior to return to service, on the repaired area to the requirements specified in Table IWE or IWL-2500-1.

10.6 Repair Records:

10.6.1 As applicable, reports and records or their equivalent shall include but not be limited to the following on Class CC or MC of Step 4.1:

a. Filing index for the documents
b. Repair Records and Reports (IWA-6340 (d)), (Condition Reports, WO, etc.)
c. NDE Records (IWA-6340 (f))
d. System Pressure Testing Records (IWA-5300)
e. Wall and Member Thickness Verification Records
f. Ginna Owner Review Report (GORR) Form
g. Engineering Evaluation Report (IWL-3310)
h. Pressure Test Procedures and Reports (IWA-6340 [i and j])
i. Verification of Acceptability and Failure Evaluation

10.6.2 Repair reports, records or their equivalent shall be filed as specified by their implementing procedures.

11.0 **Replacement (and Modification) Requirements:**

11.1 Replacement Applicability:

11.1.1 Modifications, "Approved Equivalent" and "Like-for-Like" Replacements shall be conducted in accordance with the requirements of this Program.

11.2 Additional Requirements:

11.2.1 All Replacements (including Modifications) shall conform to 4.0, as applicable, which specifies the requirements for design, fabrication and examination as well as the Construction Code edition and/or Owners' Requirements, as applicable.

11.2.2 Replacement Plans (Work Orders) shall conform to the requirements specified within 12.0.

11.2.3 All Surplus or "Swapped" items that are installed or removed under a Replacement activity shall conform to the requirements of 11.2.1 and 11.2.2.

11.2.4 Replacements (including Modifications) that are installed by welding or by mechanical means shall conform to the requirements of this Program, if not exempted.

11.3 Welded Replacements:

11.3.1 Welded replacements shall conform to 4.0 and paragraphs 10.3.1, 10.3.2. Welding shall be performed in accordance with IWA-4610.

11.4 Leakage Testing:

11.4.1 Leakage testing shall be performed, as applicable, to the requirements specified within 10.4.

11.5 Construction Examination Requirements:

11.5.1 Applicable NDE shall be performed to the requirements of the Construction Code and/or Owners Requirements that are identified for the replacement activity as defined within 4.0.

11.6 Preservice Examination Requirements:

11.6.1 Prior to the return of the replacement to service, a preservice (baseline) examination shall be performed in accordance with Table IWE or IWL-2500-1, as applicable.

11.7 Replacement (including Modification) Records:

11.7.1 As applicable, reports and records or their equivalent shall include but not be limited to the following:

a. Filing Index of the documents.
b. Original Construction Specifications or Bills of Materials, (including authorized Manufacturing and installation changes).
c. Design Criteria.
d. Verification of Acceptability and Failure Evaluation.
e. Welding and Heat Treating Records.
f. Examination and Test Records.
g. Material Certification.
h. Replacement Part(s) Manufacturer Data Report. (i.e. component data sheets).
i. Overpressure Protection Report. (as defined on design outputs).
j. Ginna Owners Review Report (GORR) form.
k. Modification/Replacement Records (EWR, TSR, PCR, Condition Report, etc.).
l. Fabrication and Installation Records.
m. Maintenance Records (WO, etc.).
n. Stress/Seismic Analysis.

11.7.2 Replacement reports, records or their equivalent may be filed as specified by their implementing procedures.

12.0 **Repair / Replacement Plans:**

12.1 Repair / Replacement Plans (Work Orders) shall conform to the requirements specified within IWA-4140 and contain the following information:

1. Applicable ASME Section XI Code Edition, Addenda and Code Cases.

2. Construction Code Edition, Addenda, and Code Cases or Owners' Requirements used to construct the item being repaired or replaced.

3. Construction Code Edition, Addenda, and Code Cases or Owners' Requirements applicable to the repair or replacement.

4. For a repair, description of the flaw and the nondestructive examination method used to detect the flaw.

5. For a repair, the flaw removal method, method of measurement of the cavity created by removing the flaw, requirements for reference points during and after the repair, and Surface examination requirement of the cavity.

6. Description of the work to be performed on the item.

7. Applicable weld procedure, heat treatment, nondestructive examination, tests, and material requirements.

8. Applicable examination(s), test, and acceptance criteria to be used to verify acceptability. (Construction examinations as well as Section XI Preservice examinations, as applicable)

9. Intended life of the repair or the item to be used for replacement, when less than the remainder of the design life of the item.

10. For replacement, whether application of the ASME Code Symbol Stamp is required in accordance with IWA-4920.

11. Documentation in accordance with IWA-4900 and IWA-6000.

12.2 In addition to the requirements within 12.1, for Containment Post-Tensioning Items (IWL), the following requirements shall also be contained in the Replacement Plan (Work Order):

1. Requirements for removal of items that are to be replaced.

2. Surface preparation required prior to installation of replacement items.

3. Examinations required prior to installation of replacement items.

4. Detensioning and retensioning requirements for tendons affected by installation of replacement items.

5. Requirements and procedures applicable to installation of replacement items.

6. In-Process sampling and testing requirements to be performed during installation of replacement items.

Supplement 1 – Table of Contents

Introduction

Table	Long Term Plan
Table 1	Fourth Interval (2000 to 2009) Inservice Inspection (ISI) Program Plan
Table 2	First Interval (1997 to 2008) Containment (IWE/IWL) Inservice Inspection Program Plan

INTRODUCTION

Inservice Inspection Program Plan Tables were developed to comply with the Fourth Interval Inservice Inspection Program at R. E. Ginna Nuclear Power Plant. The Fourth Inservice Inspection Interval for Class 1, 2 and 3 items was initiated on January 1, 2000 and ends on December 31, 2009. **Table 1** identifies the examination plan for Class 1, 2 and 3 items requiring examination during the 10-Year Interval as required by ASME Section XI Code, 1995 Edition with the 1996 Addenda and as modified by Code Cases, Relief Requests and 10CFR50.55a requirements specified within the Fourth Interval Inservice Inspection Program.

The First Inservice Inspection Interval for Containment Class MC and CC items was initiated on September 09, 1996 and ends on September 09, 2008. The first period of the Containment Program was extended to 5-years as allowed by and specified within 10CFR50.55a. **Table 2** identifies the examination plan for Containment Class MC and CC items requiring examination during the Interval as required by ASME Section XI Code, 1992 Edition, no Addenda and as modified by Code Cases, Relief Requests and 10CFR50.55a requirements specified within the Fourth Interval Inservice Inspection Program.

The Tables are grouped by ASME Section XI Category Number, Item Number and Summary Number. Other non-code category numbers and item numbers are used within the tables to specify other programs where examinations are performed. Each item within Table 1, and 2 identifies the item Class, ASME Category Number, ASME Item Number, unique Summary Number, Component Identification, Component Description, System, Isometric Drawing, and outage year when the item will be examined. The tables also identify the types of Program examinations to be performed within the outage year. Program examinations include Code Required (ISI), Augmented (AUG), Owner Elected (OWN) and Code ISI Preservice (PRE).

The schedule within Tables 1, and 2 uses various letters which represents the status and type of examination performed within the Program Type. The following scheduling key defines the examination nomenclature.

Scheduling Key

Scheduled	"s"	To schedule an item once or will appear at the beginning of a multiple schedule of the item.
Completed	"c"	Upon exam completion the schedule "s" will be replaced with a "c".

Scheduling Key (continued)

Expanded	"e"	To increase a work scope without taking code credit within the percentage calculations.
	"E"	Upon exam completion of an expanded exam, the "e" within the schedule will show an "E".
Additional Expanded Scope	"a"	After an initial "Expanded" work scope, an additional expanded scope schedule is identified using an "a"
	"A"	Upon exam completion of an additional expanded scope, the "a" within the schedule will show an "A"
Partial	"p"	To track partially completed component examination requirements
Limited	"l"	To track limited component examinations
Multiple	"b"	For multiple scheduling of the same component in successive outages within the 10 year Interval
	"B"	Examination completion of a multiple scheduled item
Tickler	"t"	To track exam or used as a reminder is a component will be Opened
Successive	"h"	To schedule a Successive exam
	"H"	Upon exam completion of a Successive exam, the "h" within the schedule will show a "H"

Attachments:

Table 1	Revision 1	"Fourth Interval (2000 to 2009) Inservice Inspection (ISI) Program Plan."
Table 2	Revision 1	"First Interval (1997 to 2008) Containment (IWE/IWL) Inservice Inspection Program Plan."

R. E. GINNA NUCLEAR POWER PLANT

FOURTH INTERVAL (2000 to 2009) INSERVICE INSPECTION (ISI) PROGRAM PLAN

SUPPLEMENT 1, TABLE 1

Effective Date: November 30, 2004

Prepared By: Frank A Klepacki **Date:** 11/19/04

Approved By: [signature] **Date:** 11-19-04

Record Category: 15.22.3

Category, ItemNO, Class	Summary / CompID / System	Scope / Method / Procedure	Iso No. Comp. Desc. Code Case		Period 1 00	Period 1 02	Period 2 03	Period 2 05	Period 2 06	Period 3 08	Period 3 09
----	I007700		A-8	ISI	-	-	-	-	-	-	-
----	RHE-1		SHELL TO HEAD WELD (TUBE SIDE)	AUG	-	-	-	-	-	-	-
2	CVCS-CHRG			OWN	-	-	-	-	-	-	-
				PRE	-	-	-	-	-	-	-
----	I008300		A-8	ISI	-	-	-	-	-	-	-
----	RHE-4		SHELL TO HEAD WELD (TUBE SIDE)	AUG	-	-	-	-	-	-	-
2	CVCS-CHRG			OWN	-	-	-	-	-	-	-
				PRE	-	-	-	-	-	-	-
----	I008900		A-8	ISI	-	-	-	-	-	-	-
----	RHE-7		SHELL TO HEAD WELD (TUBE SIDE)	AUG	-	-	-	-	-	-	-
2	CVCS-CHRG			OWN	-	-	-	-	-	-	-
				PRE	-	-	-	-	-	-	-
----	I009720		A-8	ISI	-	-	-	-	-	-	-
----	RHE-N4		NOZZLE INSIDE RADIUS SECTION	AUG	-	-	-	-	-	-	-
2	CVCS-CHRG			OWN	-	-	-	-	-	-	-
				PRE	-	-	-	-	-	-	-
----	I009730		A-8	ISI	-	-	-	-	-	-	-
----	RHE-N6		NOZZLE INSIDE RADIUS SECTION	AUG	-	-	-	-	-	-	-
2	CVCS-CHRG			OWN	-	-	-	-	-	-	-
				PRE	-	-	-	-	-	-	-
----	I009735		A-8	ISI	-	-	-	-	-	-	-
----	RHE-N7		NOZZLE INSIDE RADIUS SECTION	AUG	-	-	-	-	-	-	-
2	CVCS-CHRG			OWN	-	-	-	-	-	-	-
				PRE	-	-	-	-	-	-	-
----	I009745		A-8	ISI	-	-	-	-	-	-	-
----	RHE-N9		NOZZLE INSIDE RADIUS SECTION	AUG	-	-	-	-	-	-	-
2	CVCS-CHRG			OWN	-	-	-	-	-	-	-
				PRE	-	-	-	-	-	-	-
----	I009750		A-8	ISI	-	-	-	-	-	-	-
----	RHE-N10		NOZZLE INSIDE RADIUS SECTION	AUG	-	-	-	-	-	-	-
2	CVCS-CHRG			OWN	-	-	-	-	-	-	-
				PRE	-	-	-	-	-	-	-
----	I009760		A-8	ISI	-	-	-	-	-	-	-
----	RHE-N12		NOZZLE INSIDE RADIUS SECTION	AUG	-	-	-	-	-	-	-
2	CVCS-CHRG			OWN	-	-	-	-	-	-	-
				PRE	-	-	-	-	-	-	-
----	I009800		A-8	ISI	-	-	-	-	-	-	-
----	RHE-10		NOZZLE N6 TO PIPE	AUG	-	-	-	-	-	-	-
2	CVCS-CHRG			OWN	-	-	-	-	-	-	-
				PRE	-	-	-	-	-	-	-

Category, ItemNO, Class	Summary / CompID / System	Scope / Method / Procedure	Iso No. Comp. Desc. Code Case		Period 1 00	Period 1 02	Period 2 03	Period 2 05	Period 2 06	Period 3 08	Period 3 09
----	I009900		A-8	ISI	-	-	-	-	-	-	-
----	RHE-11		PIPE TO NOZZLE N7	AUG	-	-	-	-	-	-	-
2	CVCS-CHRG			OWN	-	-	-	-	-	-	-
				PRE	-	-	-	-	-	-	-
----	I010000		A-8	ISI	-	-	-	-	-	-	-
----	RHE-12		NOZZLE N9 TO PIPE	AUG	-	-	-	-	-	-	-
2	CVCS-CHRG			OWN	-	-	-	-	-	-	-
				PRE	-	-	-	-	-	-	-
----	I010100		A-8	ISI	-	-	-	-	-	-	-
----	RHE-13		PIPE TO NOZZLE N10	AUG	-	-	-	-	-	-	-
2	CVCS-CHRG			OWN	-	-	-	-	-	-	-
				PRE	-	-	-	-	-	-	-
----	I011610		A-3-1B	ISI	-	-	-	-	-	-	-
----	A1		3/4" BRANCH WELD	AUG	-	-	-	-	-	-	-
1	RC			OWN	-	-	-	-	-	-	-
				PRE	-	-	-	-	-	-	-
----	I011620		A-3-1B	ISI	-	-	-	-	-	-	-
----	A2		3/4" BRANCH WELD	AUG	-	-	-	-	-	-	-
1	RC			OWN	-	-	-	-	-	-	-
				PRE	-	-	-	-	-	-	-
----	I011630		A-3-1B	ISI	-	-	-	-	-	-	-
----	A3		3/4" BRANCH WELD	AUG	-	-	-	-	-	-	-
1	RC			OWN	-	-	-	-	-	-	-
				PRE	-	-	-	-	-	-	-
----	I011640		A-3-1B	ISI	-	-	-	-	-	-	-
----	A4		3/4" BRANCH WELD	AUG	-	-	-	-	-	-	-
1	RC			OWN	-	-	-	-	-	-	-
				PRE	-	-	-	-	-	-	-
----	I012710		A-3-2A	ISI	-	-	-	-	-	-	-
----	A1		3/4" BRANCH WELD	AUG	-	-	-	-	-	-	-
1	RC			OWN	-	-	-	-	-	-	-
				PRE	-	-	-	-	-	-	-
----	I013110		A-3-2B	ISI	-	-	-	-	-	-	-
----	A1		3/4" BRANCH WELD	AUG	-	-	-	-	-	-	-
1	RC			OWN	-	-	-	-	-	-	-
				PRE	-	-	-	-	-	-	-
----	I013120		A-3-2B	ISI	-	-	-	-	-	-	-
----	A2		3/4" BRANCH WELD	AUG	-	-	-	-	-	-	-
1	RC			OWN	-	-	-	-	-	-	-
				PRE	-	-	-	-	-	-	-

Category, ItemNO, Class	Summary / CompID / System	Scope / Method / Procedure	Iso No. Comp. Desc. Code Case		Period 1 00	Period 1 02	Period 2 03	Period 2 05	Period 2 06	Period 3 08	Period 3 09
----	I013130		A-3-2B	ISI	-	-	-	-	-	-	-
----	A3		3/4" BRANCH WELD	AUG	-	-	-	-	-	-	-
1	RC			OWN	-	-	-	-	-	-	-
				PRE	-	-	-	-	-	-	-
----	I013140		A-3-2B	ISI	-	-	-	-	-	-	-
----	A4		3/4" BRANCH WELD	AUG	-	-	-	-	-	-	-
1	RC			OWN	-	-	-	-	-	-	-
				PRE	-	-	-	-	-	-	-
----	I022030		A-11	ISI	-	-	-	-	-	-	-
----	1		TEE-TO-PIPE	AUG	-	-	-	-	-	-	-
2	CVCS-CHRG			OWN	-	-	-	-	-	-	-
				PRE	-	-	-	-	-	-	-
----	I022060	OWN/PT/PT-106	A-11	ISI	-	-	-	-	-	-	-
----	2		PIPE-TO-TEE	AUG	-	-	-	-	-	-	-
2	CVCS-CHRG			OWN	-	-	c	-	-	-	-
				PRE	-	-	-	-	-	-	-
----	I022070	OWN/PT/PT-106	A-11	ISI	-	-	-	-	-	-	-
----	3		TEE TO REDUCING INSERT	AUG	-	-	-	-	-	-	-
2	CVCS-CHRG			OWN	-	-	c	-	-	-	-
				PRE	-	-	-	-	-	-	-
----	I022080	OWN/PT/PT-106	A-11	ISI	-	-	-	-	-	-	-
----	4		TEE-TO-PIPE	AUG	-	-	-	-	-	-	-
2	CVCS-CHRG			OWN	-	-	c	-	-	-	-
				PRE	-	-	-	-	-	-	-
----	I022090		A-11	ISI	-	-	-	-	-	-	-
----	5		PIPE TO VALVE 296	AUG	-	-	-	-	-	-	-
2	CVCS-CHRG			OWN	-	-	-	-	-	-	-
				PRE	-	-	-	-	-	-	-
----	I022100		A-11	ISI	-	-	-	-	-	-	-
----	5A		296 VALVE-TO-PIPE	AUG	-	-	-	-	-	-	-
2	CVCS-CHRG			OWN	-	-	-	-	-	-	-
				PRE	-	-	-	-	-	-	-
----	I022300		A-11	ISI	-	-	-	-	-	-	-
----	6		PIPE-TO-ELBOW	AUG	-	-	-	-	-	-	-
2	CVCS-CHRG			OWN	-	-	-	-	-	-	-
				PRE	-	-	-	-	-	-	-
----	I022400		A-11	ISI	-	-	-	-	-	-	-
----	6A		ELBOW-TO-PIPE	AUG	-	-	-	-	-	-	-
2	CVCS-CHRG			OWN	-	-	-	-	-	-	-
				PRE	-	-	-	-	-	-	-

Category, ItemNO, Class	Summary / CompID / System	Scope / Method / Procedure	Iso No. Comp. Desc. Code Case		Period 1 00	Period 1 02	Period 2 03	Period 2 05	Period 2 06	Period 3 08	Period 3 09
----	I022625		A-11	ISI	-	-	-	-	-	-	-
----	7		PIPE TO VALVE 9313	AUG	-	-	-	-	-	-	-
2	CVCS-CHRG			OWN	-	-	-	-	-	-	-
				PRE	-	-	-	-	-	-	-
----	I030410		A-15	ISI	-	-	-	-	-	-	-
----	A1		3/4" BRANCH WELD	AUG	-	-	-	-	-	-	-
1	RC			OWN	-	-	-	-	-	-	-
				PRE	-	-	-	-	-	-	-
----	I031110		A-15	ISI	-	-	-	-	-	-	-
----	A2		3/4" BRANCH WELD	AUG	-	-	-	-	-	-	-
1	RHR			OWN	-	-	-	-	-	-	-
				PRE	-	-	-	-	-	-	-
----	I031510		A-15	ISI	-	-	-	-	-	-	-
----	A3		3/4" BRANCH WELD	AUG	-	-	-	-	-	-	-
1	RHR			OWN	-	-	-	-	-	-	-
				PRE	-	-	-	-	-	-	-
----	I033110		A-16	ISI	-	-	-	-	-	-	-
----	A1		3/4" BRANCH WELD	AUG	-	-	-	-	-	-	-
1	HPSI			OWN	-	-	-	-	-	-	-
				PRE	-	-	-	-	-	-	-
----	I033120		A-16	ISI	-	-	-	-	-	-	-
----	A2		3/4" BRANCH WELD	AUG	-	-	-	-	-	-	-
1	HPSI			OWN	-	-	-	-	-	-	-
				PRE	-	-	-	-	-	-	-
----	I034110		A-16	ISI	-	-	-	-	-	-	-
----	A3		3/4" BRANCH WELD	AUG	-	-	-	-	-	-	-
1	HPSI			OWN	-	-	-	-	-	-	-
				PRE	-	-	-	-	-	-	-
----	I034510		A-17	ISI	-	-	-	-	-	-	-
----	E1		3/4" BRANCH WELD	AUG	-	-	-	-	-	-	-
1	HPSI			OWN	-	-	-	-	-	-	-
				PRE	-	-	-	-	-	-	-
----	I034520		A-17	ISI	-	-	-	-	-	-	-
----	E2		3/4" BRANCH WELD	AUG	-	-	-	-	-	-	-
1	HPSI			OWN	-	-	-	-	-	-	-
				PRE	-	-	-	-	-	-	-
----	I036510		A-18	ISI	-	-	-	-	-	-	-
----	A1		3/4" BRANCH WELD	AUG	-	-	-	-	-	-	-
1	RC			OWN	-	-	-	-	-	-	-
				PRE	-	-	-	-	-	-	-

Category, ItemNO, Class	Summary / CompID / System	Scope / Method / Procedure	Iso No. Comp. Desc. Code Case		Period 1 00	Period 1 02	Period 2 03	Period 2 05	Period 2 06	Period 3 08	Period 3 09
----	I037610		A-14	ISI	-	-	-	-	-	-	-
----	A1		3/4" BRANCH WELD	AUG	-	-	-	-	-	-	-
1	RC			OWN	-	-	-	-	-	-	-
				PRE	-	-	-	-	-	-	-
----	I048252		A-24	ISI	-	-	-	-	-	-	-
----	22		200B VALVE-TO-PIPE	AUG	-	-	-	-	-	-	-
2	CVCS-LTDN			OWN	-	-	-	-	-	-	-
				PRE	-	-	-	-	-	-	-
----	I048276		A-24	ISI	-	-	-	-	-	-	-
----	31		202 VALVE-TO-PIPE	AUG	-	-	-	-	-	-	-
2	CVCS-LTDN			OWN	-	-	-	-	-	-	-
				PRE	-	-	-	-	-	-	-
----	I050200		A-25A	ISI	-	-	-	-	-	-	-
----	17		294 VALVE-TO-PIPE	AUG	-	-	-	-	-	-	-
2	CVCS-CHRG			OWN	-	-	-	-	-	-	-
				PRE	-	-	-	-	-	-	-
----	I050300		A-25A	ISI	-	-	-	-	-	-	-
----	18		PIPE-TO-ELBOW	AUG	-	-	-	-	-	-	-
2	CVCS-CHRG			OWN	-	-	-	-	-	-	-
				PRE	-	-	-	-	-	-	-
----	I050400		A-25A	ISI	-	-	-	-	-	-	-
----	19		ELBOW-TO-PIPE	AUG	-	-	-	-	-	-	-
2	CVCS-CHRG			OWN	-	-	-	-	-	-	-
				PRE	-	-	-	-	-	-	-
----	I050721		A-25A	ISI	-	-	-	-	-	-	-
----	21C		PIPE-TO-COUPLING	AUG	-	-	-	-	-	-	-
2	CVCS-CHRG			OWN	-	-	-	-	-	-	-
				PRE	-	-	-	-	-	-	-
----	I050722		A-25A	ISI	-	-	-	-	-	-	-
----	20		PIPE-TO-PIPE	AUG	-	-	-	-	-	-	-
2	CVCS-CHRG			OWN	-	-	-	-	-	-	-
				PRE	-	-	-	-	-	-	-
----	I050723		A-25A	ISI	-	-	-	-	-	-	-
----	21B		COUPLING-TO-PIPE	AUG	-	-	-	-	-	-	-
2	CVCS-CHRG			OWN	-	-	-	-	-	-	-
				PRE	-	-	-	-	-	-	-
----	I050724		A-25A	ISI	-	-	-	-	-	-	-
----	21		PIPE-TO-PIPE	AUG	-	-	-	-	-	-	-
2	CVCS-CHRG			OWN	-	-	-	-	-	-	-
				PRE	-	-	-	-	-	-	-

Category, ItemNO, Class	Summary / CompID / System	Scope / Method / Procedure	Iso No. Comp. Desc. Code Case		Period 1 00	Period 1 02	Period 2 03	Period 2 05	Period 2 06	Period 3 08	Period 3 09
----	I050725		A-25A	ISI	-	-	-	-	-	-	-
----	21A		PIPE-TO-VALVE 9314	AUG	-	-	-	-	-	-	-
2	CVCS-CHRG			OWN	-	-	-	-	-	-	-
				PRE	-	-	-	-	-	-	-
----	I050746		A-25	ISI	-	-	-	-	-	-	-
----	21D		REDUCER-TO-3/4" PIPE	AUG	-	-	-	-	-	-	-
1	CVCS-CHRG			OWN	-	-	-	-	-	-	-
				PRE	-	-	-	-	-	-	-
----	I050803		A-30	ISI	-	-	-	-	-	-	-
----	1		VALVE 370B TO PIPE	AUG	-	-	-	-	-	-	-
2	CVCS-CHRG			OWN	-	-	-	-	-	-	-
				PRE	-	-	-	-	-	-	-
----	I050806		A-30	ISI	-	-	-	-	-	-	-
----	2		PIPE TO 3/4" SOCKET	AUG	-	-	-	-	-	-	-
2	CVCS-CHRG			OWN	-	-	-	-	-	-	-
				PRE	-	-	-	-	-	-	-
----	I050809		A-30	ISI	-	-	-	-	-	-	-
----	3		PIPE-TO-ELBOW	AUG	-	-	-	-	-	-	-
2	CVCS-CHRG			OWN	-	-	-	-	-	-	-
				PRE	-	-	-	-	-	-	-
----	I050812		A-30	ISI	-	-	-	-	-	-	-
----	4		ELBOW-TO-PIPE	AUG	-	-	-	-	-	-	-
2	CVCS-CHRG			OWN	-	-	-	-	-	-	-
				PRE	-	-	-	-	-	-	-
----	I050815		A-30	ISI	-	-	-	-	-	-	-
----	5		PIPE TO VALVE 370A	AUG	-	-	-	-	-	-	-
2	CVCS-CHRG			OWN	-	-	-	-	-	-	-
				PRE	-	-	-	-	-	-	-
----	I050818		A-30	ISI	-	-	-	-	-	-	-
----	6		VALVE 370A TO PIPE	AUG	-	-	-	-	-	-	-
2	CVCS-CHRG			OWN	-	-	-	-	-	-	-
				PRE	-	-	-	-	-	-	-
----	I050821		A-30	ISI	-	-	-	-	-	-	-
----	7		PIPE-TO-ELBOW	AUG	-	-	-	-	-	-	-
2	CVCS-CHRG			OWN	-	-	-	-	-	-	-
				PRE	-	-	-	-	-	-	-
----	I050824		A-30	ISI	-	-	-	-	-	-	-
----	8		ELBOW-TO-PIPE	AUG	-	-	-	-	-	-	-
2	CVCS-CHRG			OWN	-	-	-	-	-	-	-
				PRE	-	-	-	-	-	-	-

Category, ItemNO, Class	Summary / CompID / System	Scope / Method / Procedure	Iso No. Comp. Desc. Code Case		Period 1 00	Period 1 02	Period 2 03	Period 2 05	Period 2 06	Period 3 08	Period 3 09
----	I050833		A-30	ISI	-	-	-	-	-	-	-
----	9		PIPE TO COUPLING	AUG	-	-	-	-	-	-	-
2	CVCS-CHRG			OWN	-	-	-	-	-	-	-
				PRE	-	-	-	-	-	-	-
----	I050836		A-30	ISI	-	-	-	-	-	-	-
----	10		COUPLING TO PIPE	AUG	-	-	-	-	-	-	-
2	CVCS-CHRG			OWN	-	-	-	-	-	-	-
				PRE	-	-	-	-	-	-	-
----	I050845		A-30	ISI	-	-	-	-	-	-	-
----	11		PIPE-TO-ELBOW	AUG	-	-	-	-	-	-	-
2	CVCS-CHRG			OWN	-	-	-	-	-	-	-
				PRE	-	-	-	-	-	-	-
----	I050848		A-30	ISI	-	-	-	-	-	-	-
----	12		ELBOW-TO-PIPE	AUG	-	-	-	-	-	-	-
2	CVCS-CHRG			OWN	-	-	-	-	-	-	-
				PRE	-	-	-	-	-	-	-
----	I050851		A-30	ISI	-	-	-	-	-	-	-
----	13		PIPE-TO-ELBOW	AUG	-	-	-	-	-	-	-
2	CVCS-CHRG			OWN	-	-	-	-	-	-	-
				PRE	-	-	-	-	-	-	-
----	I050854		A-30	ISI	-	-	-	-	-	-	-
----	14		ELBOW-TO-PIPE	AUG	-	-	-	-	-	-	-
2	CVCS-CHRG			OWN	-	-	-	-	-	-	-
				PRE	-	-	-	-	-	-	-
----	I050860		A-30	ISI	-	-	-	-	-	-	-
----	15		PIPE-TO-TEE	AUG	-	-	-	-	-	-	-
2	CVCS-CHRG			OWN	-	-	-	-	-	-	-
				PRE	-	-	-	-	-	-	-
----	I050863		A-30	ISI	-	-	-	-	-	-	-
----	16		TEE TO INSERT	AUG	-	-	-	-	-	-	-
2	CVCS-CHRG			OWN	-	-	-	-	-	-	-
				PRE	-	-	-	-	-	-	-
----	I050866		A-30	ISI	-	-	-	-	-	-	-
----	17		TEE-TO-PIPE	AUG	-	-	-	-	-	-	-
2	CVCS-CHRG			OWN	-	-	-	-	-	-	-
				PRE	-	-	-	-	-	-	-
----	I050869		A-30	ISI	-	-	-	-	-	-	-
----	18		PIPE TO VALVE 362C	AUG	-	-	-	-	-	-	-
2	CVCS-CHRG			OWN	-	-	-	-	-	-	-
				PRE	-	-	-	-	-	-	-

Category, ItemNO, Class	Summary / CompID / System	Scope / Method / Procedure	Iso No. Comp. Desc. Code Case		Period 1 00	Period 1 02	Period 2 03	Period 2 05	Period 2 06	Period 3 08	Period 3 09
----	I050872		A-30	ISI	-	-	-	-	-	-	-
----	19		VALVE 362C TO PIPE	AUG	-	-	-	-	-	-	-
2	CVCS-CHRG			OWN	-	-	-	-	-	-	-
				PRE	-	-	-	-	-	-	-
----	I050875		A-30	ISI	-	-	-	-	-	-	-
----	20		PIPE-TO-NOZZLE (REGEN HTX)	AUG	-	-	-	-	-	-	-
2	CVCS-CHRG			OWN	-	-	-	-	-	-	-
				PRE	-	-	-	-	-	-	-
----	I050903		A-29	ISI	-	-	-	-	-	-	-
----	1-A		NOZZLE-TO-PIPE (REGEN HTX)	AUG	-	-	-	-	-	-	-
2	CVCS-CHRG			OWN	-	-	-	-	-	-	-
				PRE	-	-	-	-	-	-	-
----	I050906		A-29	ISI	-	-	-	-	-	-	-
----	2		PIPE-TO-ELBOW	AUG	-	-	-	-	-	-	-
2	CVCS-CHRG			OWN	-	-	-	-	-	-	-
				PRE	-	-	-	-	-	-	-
----	I050909		A-29	ISI	-	-	-	-	-	-	-
----	3		ELBOW-TO-PIPE	AUG	-	-	-	-	-	-	-
2	CVCS-CHRG			OWN	-	-	-	-	-	-	-
				PRE	-	-	-	-	-	-	-
----	I050912		A-29	ISI	-	-	-	-	-	-	-
----	4		PIPE-TO-TEE	AUG	-	-	-	-	-	-	-
2	CVCS-CHRG			OWN	-	-	-	-	-	-	-
				PRE	-	-	-	-	-	-	-
----	I050915		A-29	ISI	-	-	-	-	-	-	-
----	5		TEE TO INSERT	AUG	-	-	-	-	-	-	-
2	CVCS-CHRG			OWN	-	-	-	-	-	-	-
				PRE	-	-	-	-	-	-	-
----	I050918		A-29	ISI	-	-	-	-	-	-	-
----	6		TEE-TO-PIPE	AUG	-	-	-	-	-	-	-
2	CVCS-CHRG			OWN	-	-	-	-	-	-	-
				PRE	-	-	-	-	-	-	-
----	I050921		A-29	ISI	-	-	-	-	-	-	-
----	7		PIPE-TO-ELBOW	AUG	-	-	-	-	-	-	-
2	CVCS-CHRG			OWN	-	-	-	-	-	-	-
				PRE	-	-	-	-	-	-	-
----	I050924		A-29	ISI	-	-	-	-	-	-	-
----	8		ELBOW-TO-PIPE	AUG	-	-	-	-	-	-	-
2	CVCS-CHRG			OWN	-	-	-	-	-	-	-
				PRE	-	-	-	-	-	-	-

Category, ItemNO, Class	Summary / CompID / System	Scope / Method / Procedure	Iso No. Comp. Desc. Code Case		Period 1 00	Period 1 02	Period 2 03	Period 2 05	Period 2 06	Period 3 08	Period 3 09
----	I050939		A-29	ISI	-	-	-	-	-	-	-
----	9		PIPE-TO-TEE	AUG	-	-	-	-	-	-	-
2	CVCS-CHRG			OWN	-	-	-	-	-	-	-
				PRE	-	-	-	-	-	-	-
----	I050942		A-29	ISI	-	-	-	-	-	-	-
----	10A		TEE TO INSERT	AUG	-	-	-	-	-	-	-
2	CVCS-CHRG			OWN	-	-	-	-	-	-	-
				PRE	-	-	-	-	-	-	-
----	I050945		A-29	ISI	-	-	-	-	-	-	-
----	10		TEE-TO-PIPE	AUG	-	-	-	-	-	-	-
2	CVCS-CHRG			OWN	-	-	-	-	-	-	-
				PRE	-	-	-	-	-	-	-
----	I050951		A-29	ISI	-	-	-	-	-	-	-
----	11		PIPE-TO-TEE	AUG	-	-	-	-	-	-	-
2	CVCS-CHRG			OWN	-	-	-	-	-	-	-
				PRE	-	-	-	-	-	-	-
----	I050954		A-29	ISI	-	-	-	-	-	-	-
----	12		TEE-TO-PIPE	AUG	-	-	-	-	-	-	-
2	CVCS-CHRG			OWN	-	-	-	-	-	-	-
				PRE	-	-	-	-	-	-	-
----	I050957		A-29	ISI	-	-	-	-	-	-	-
----	13		PIPE-TO-TEE	AUG	-	-	-	-	-	-	-
2	CVCS-CHRG			OWN	-	-	-	-	-	-	-
				PRE	-	-	-	-	-	-	-
----	I050960		A-29	ISI	-	-	-	-	-	-	-
----	14		TEE TO INSERT	AUG	-	-	-	-	-	-	-
2	CVCS-CHRG			OWN	-	-	-	-	-	-	-
				PRE	-	-	-	-	-	-	-
----	I050963		A-29	ISI	-	-	-	-	-	-	-
----	15		TEE-TO-PIPE	AUG	-	-	-	-	-	-	-
2	CVCS-CHRG			OWN	-	-	-	-	-	-	-
				PRE	-	-	-	-	-	-	-
----	I050969		A-29	ISI	-	-	-	-	-	-	-
----	16		PIPE TO VALVE 294	AUG	-	-	-	-	-	-	-
2	CVCS-CHRG			OWN	-	-	-	-	-	-	-
				PRE	-	-	-	-	-	-	-
----	I053850		A-27	ISI	-	-	-	-	-	-	-
----	1		CROSS TO PIPE	AUG	-	-	-	-	-	-	-
2	CVCS-CHRG			OWN	-	-	-	-	-	-	-
				PRE	-	-	-	-	-	-	-

Category, ItemNO, Class	Summary / CompID / System	Scope / Method / Procedure	Iso No. Comp. Desc. Code Case		Period 1 00	Period 1 02	Period 2 03	Period 2 05	Period 2 06	Period 3 08	Period 3 09
----	I053875		A-27	ISI	-	-	-	-	-	-	-
----	2		PIPE TO VALVE 392A	AUG	-	-	-	-	-	-	-
2	CVCS-CHRG			OWN	-	-	-	-	-	-	-
				PRE	-	-	-	-	-	-	-
----	I053900		A-27	ISI	-	-	-	-	-	-	-
----	3		392A VALVE-TO-PIPE	AUG	-	-	-	-	-	-	-
2	CVCS-CHRG			OWN	-	-	-	-	-	-	-
				PRE	-	-	-	-	-	-	-
----	I054000		A-27	ISI	-	-	-	-	-	-	-
----	4		PIPE-TO-ELBOW	AUG	-	-	-	-	-	-	-
2	CVCS-CHRG			OWN	-	-	-	-	-	-	-
				PRE	-	-	-	-	-	-	-
----	I054100		A-27	ISI	-	-	-	-	-	-	-
----	5		ELBOW-TO-PIPE	AUG	-	-	-	-	-	-	-
2	CVCS-CHRG			OWN	-	-	-	-	-	-	-
				PRE	-	-	-	-	-	-	-
----	I054500		A-27	ISI	-	-	-	-	-	-	-
----	6		PIPE-TO-TEE	AUG	-	-	-	-	-	-	-
2	CVCS-CHRG			OWN	-	-	-	-	-	-	-
				PRE	-	-	-	-	-	-	-
----	I054550		A-27	ISI	-	-	-	-	-	-	-
----	6A		TEE-TO-PIPE 3/4 IN.	AUG	-	-	-	-	-	-	-
2	CVCS-CHRG			OWN	-	-	-	-	-	-	-
				PRE	-	-	-	-	-	-	-
----	I054600		A-27	ISI	-	-	-	-	-	-	-
----	7		TEE-TO-PIPE	AUG	-	-	-	-	-	-	-
2	CVCS-CHRG			OWN	-	-	-	-	-	-	-
				PRE	-	-	-	-	-	-	-
----	I054700		A-27	ISI	-	-	-	-	-	-	-
----	8		PIPE-TO-FLANGE	AUG	-	-	-	-	-	-	-
2	CVCS-CHRG			OWN	-	-	-	-	-	-	-
				PRE	-	-	-	-	-	-	-
----	I054800		A-27	ISI	-	-	-	-	-	-	-
----	9		FLANGE-TO-PIPE	AUG	-	-	-	-	-	-	-
2	CVCS-CHRG			OWN	-	-	-	-	-	-	-
				PRE	-	-	-	-	-	-	-
----	I054920		A-27	ISI	-	-	-	-	-	-	-
----	9A		PIPE-TO-VALVE 9315	AUG	-	-	-	-	-	-	-
2	CVCS-CHRG			OWN	-	-	-	-	-	-	-
				PRE	-	-	-	-	-	-	-

Category, ItemNO, Class	Summary / CompID / System	Scope / Method / Procedure	Iso No. Comp. Desc. Code Case		Period 1 00	Period 1 02	Period 2 03	Period 2 05	Period 2 06	Period 3 08	Period 3 09
----	I054940		A-27	ISI	-	-	-	-	-	-	-
----	9C		PIPE(3/4")-TO-VALVE(9318)	AUG	-	-	-	-	-	-	-
1	CVCS-CHRG			OWN	-	-	-	-	-	-	-
				PRE	-	-	-	-	-	-	-
----	I055900		A-22	ISI	-	-	-	-	-	-	-
----	5		541 VALVE-TO-PIPE	AUG	-	-	-	-	-	-	-
4	RC			OWN	-	-	-	-	-	-	-
				PRE	-	-	-	-	-	-	-
----	I056400		A-23A	ISI	-	-	-	-	-	-	-
----	5A		540 VALVE-TO-PIPE	AUG	-	-	-	-	-	-	-
4	RC			OWN	-	-	-	-	-	-	-
				PRE	-	-	-	-	-	-	-
----	I072100		B-2	ISI	-	-	-	-	-	-	-
----	LSFWRHX		LOWER SHELL-TO-FLANGE CIRC WELD	AUG	-	-	-	-	-	-	-
3	CVCS-LTDN			OWN	-	-	-	-	-	-	-
				PRE	-	-	-	-	-	-	-
----	I072300		B-3	ISI	-	-	-	-	-	-	-
----	LHSWSWRF		LOWER HEAD-TO-SHELL	AUG	-	-	-	-	-	-	-
Q	CVCS-CHRG			OWN	-	-	-	-	-	-	-
				PRE	-	-	-	-	-	-	-
----	I072400		B-3	ISI	-	-	-	-	-	-	-
----	SFSWRF		SHELL-TO-FLANGE	AUG	-	-	-	-	-	-	-
Q	CVCS-CHRG			OWN	-	-	-	-	-	-	-
				PRE	-	-	-	-	-	-	-
----	I072500		B-3	ISI	-	-	-	-	-	-	-
----	FUHSWRF		FLANGE-TO-UPPER HEAD	AUG	-	-	-	-	-	-	-
Q	CVCS-CHRG			OWN	-	-	-	-	-	-	-
				PRE	-	-	-	-	-	-	-
----	I073000		B-4	ISI	-	-	-	-	-	-	-
----	LHLSWSWHX		LOWER HEAD-TO-LOWER SHELL	AUG	-	-	-	-	-	-	-
3	CVCS-CHRG			OWN	-	-	-	-	-	-	-
				PRE	-	-	-	-	-	-	-
----	I073100		B-4	ISI	-	-	-	-	-	-	-
----	LSFWSWHX		LOWER SHELL-TO-FLANGE	AUG	-	-	-	-	-	-	-
3	CVCS-CHRG			OWN	-	-	-	-	-	-	-
				PRE	-	-	-	-	-	-	-
----	I074100		B-3	ISI	-	-	-	-	-	-	-
----	LHSWRCF		LOWER HEAD-TO-SHELL	AUG	-	-	-	-	-	-	-
Q	CVCS-LTDN			OWN	-	-	-	-	-	-	-
				PRE	-	-	-	-	-	-	-

Category, ItemNO, Class	Summary / CompID / System	Scope / Method / Procedure	Iso No. Comp. Desc. Code Case		Period 1 00	Period 1 02	Period 2 03	Period 2 05	Period 2 06	Period 3 08	Period 3 09
----	I074200		B-3	ISI	-	-	-	-	-	-	-
----	SFRCF		SHELL-TO-FLANGE	AUG	-	-	-	-	-	-	-
Q	CVCS-LTDN			OWN	-	-	-	-	-	-	-
				PRE	-	-	-	-	-	-	-
----	I074300		B-3	ISI	-	-	-	-	-	-	-
----	FUHRCF		FLANGE-TO-UPPER HEAD	AUG	-	-	-	-	-	-	-
Q	CVCS-LTDN			OWN	-	-	-	-	-	-	-
				PRE	-	-	-	-	-	-	-
----	I075725		B-6	ISI	-	-	-	-	-	-	-
----	1A		3" BRANCH WELD	AUG	-	-	-	-	-	-	-
2	CVCS-CHRG			OWN	-	-	-	-	-	-	-
				PRE	-	-	-	-	-	-	-
----	I075750		B-6	ISI	-	-	-	-	-	-	-
----	1B		3/4" BRANCH WELD	AUG	-	-	-	-	-	-	-
2	CVCS-CHRG			OWN	-	-	-	-	-	-	-
				PRE	-	-	-	-	-	-	-
----	I076225		B-6	ISI	-	-	-	-	-	-	-
----	1A		3" BRANCH WELD	AUG	-	-	-	-	-	-	-
2	CVCS-CHRG			OWN	-	-	-	-	-	-	-
				PRE	-	-	-	-	-	-	-
----	I076250		B-6	ISI	-	-	-	-	-	-	-
----	1B		3/4" BRANCH WELD	AUG	-	-	-	-	-	-	-
2	CVCS-CHRG			OWN	-	-	-	-	-	-	-
				PRE	-	-	-	-	-	-	-
----	I076725		B-6	ISI	-	-	-	-	-	-	-
----	1A		3" BRANCH WELD	AUG	-	-	-	-	-	-	-
2	CVCS-CHRG			OWN	-	-	-	-	-	-	-
				PRE	-	-	-	-	-	-	-
----	I076750		B-6	ISI	-	-	-	-	-	-	-
----	1B		3/4" BRANCH WELD	AUG	-	-	-	-	-	-	-
2	CVCS-CHRG			OWN	-	-	-	-	-	-	-
				PRE	-	-	-	-	-	-	-
----	I078000		B-7	ISI	-	-	-	-	-	-	-
----	LHSWSWIF-1		LOWER-HD-TO-SHELL CIRC.WELD	AUG	-	-	-	-	-	-	-
2	CVCS-CHRG			OWN	-	-	-	-	-	-	-
				PRE	-	-	-	-	-	-	-
----	I078100		B-7	ISI	-	-	-	-	-	-	-
----	SFWSWIF-1		SHELL-TO-FLANGE CIRC. WELD	AUG	-	-	-	-	-	-	-
2	CVCS-CHRG			OWN	-	-	-	-	-	-	-
				PRE	-	-	-	-	-	-	-

Category, ItemNO, Class	Summary / CompID / System	Scope / Method / Procedure	Iso No. Comp. Desc. Code Case		Period 1 00	Period 1 02	Period 2 03	Period 2 05	Period 2 06	Period 3 08	Period 3 09
----	I078500		B-7	ISI	-	-	-	-	-	-	-
----	LHSWSWIF-2		LOWER HD-TO-SHELL CIRC.WELD	AUG	-	-	-	-	-	-	-
2	CVCS-CHRG			OWN	-	-	-	-	-	-	-
				PRE	-	-	-	-	-	-	-
----	I078600		B-7	ISI	-	-	-	-	-	-	-
----	SFWSWIF-2		SHELL-TO-FLANGE CIRC. WELD	AUG	-	-	-	-	-	-	-
2	CVCS-CHRG			OWN	-	-	-	-	-	-	-
				PRE	-	-	-	-	-	-	-
----	I079055		B-8	ISI	-	-	-	-	-	-	-
----	AR1		1" BRANCH WELD	AUG	-	-	-	-	-	-	-
2	MS			OWN	-	-	-	-	-	-	-
				PRE	-	-	-	-	-	-	-
----	I079150		B-8	ISI	-	-	-	-	-	-	-
----	A1A		1-1/2" BRANCH WELD	AUG	-	-	-	-	-	-	-
2	MS			OWN	-	-	-	-	-	-	-
				PRE	-	-	-	-	-	-	-
----	I079230		B-8	ISI	-	-	-	-	-	-	-
----	A1B		3/4" BRANCH WELD	AUG	-	-	-	-	-	-	-
2	MS			OWN	-	-	-	-	-	-	-
				PRE	-	-	-	-	-	-	-
----	I079240		B-8	ISI	-	-	-	-	-	-	-
----	A1D		3/4" BRANCH WELD	AUG	-	-	-	-	-	-	-
2	MS			OWN	-	-	-	-	-	-	-
				PRE	-	-	-	-	-	-	-
----	I079260		B-8	ISI	-	-	-	-	-	-	-
----	A1C		3/4" BRANCH WELD	AUG	-	-	-	-	-	-	-
2	MS			OWN	-	-	-	-	-	-	-
				PRE	-	-	-	-	-	-	-
----	I079270		B-8	ISI	-	-	-	-	-	-	-
----	A1E		3/4" BRANCH WELD	AUG	-	-	-	-	-	-	-
2	MS			OWN	-	-	-	-	-	-	-
				PRE	-	-	-	-	-	-	-
----	I079290		B-8	ISI	-	-	-	-	-	-	-
----	A2XR1		1" BRANCH WELD	AUG	-	-	-	-	-	-	-
2	MS			OWN	-	-	-	-	-	-	-
				PRE	-	-	-	-	-	-	-
----	I082100		B-9	ISI	-	-	-	-	-	-	-
----	FA		1" BRANCH WELD	AUG	-	-	-	-	-	-	-
2	MS			OWN	-	-	-	-	-	-	-
				PRE	-	-	-	-	-	-	-

Category, ItemNO, Class	Summary / CompID / System	Scope / Method / Procedure	Iso No. Comp. Desc. Code Case		Period 1 00	Period 1 02	Period 2 03	Period 2 05	Period 2 06	Period 3 08	Period 3 09
----	I082120		B-9	ISI	-	-	-	-	-	-	-
----	FB		1-1/2" BRANCH WELD	AUG	-	-	-	-	-	-	-
2	MS			OWN	-	-	-	-	-	-	-
				PRE	-	-	-	-	-	-	-
----	I082140		B-9	ISI	-	-	-	-	-	-	-
----	FC		1" BRANCH WELD	AUG	-	-	-	-	-	-	-
2	MS			OWN	-	-	-	-	-	-	-
				PRE	-	-	-	-	-	-	-
----	I082160		B-9	ISI	-	-	-	-	-	-	-
----	FD		1" BRANCH WELD	AUG	-	-	-	-	-	-	-
2	MS			OWN	-	-	-	-	-	-	-
				PRE	-	-	-	-	-	-	-
----	I082180		B-9	ISI	-	-	-	-	-	-	-
----	FE		1" BRANCH WELD	AUG	-	-	-	-	-	-	-
2	MS			OWN	-	-	-	-	-	-	-
				PRE	-	-	-	-	-	-	-
----	I083150		B-9A	ISI	-	-	-	-	-	-	-
----	G3A		1/2" BRANCH WELD	AUG	-	-	-	-	-	-	-
2	MS			OWN	-	-	-	-	-	-	-
				PRE	-	-	-	-	-	-	-
----	I083530		B-9A	ISI	-	-	-	-	-	-	-
----	G3B		1" BRANCH WELD	AUG	-	-	-	-	-	-	-
2	MS			OWN	-	-	-	-	-	-	-
				PRE	-	-	-	-	-	-	-
----	I083630		B-9A	ISI	-	-	-	-	-	-	-
----	BWA		3" BRANCH WELD BY VALVE 3517	AUG	-	-	-	-	-	-	-
2	MS			OWN	-	-	-	-	-	-	-
				PRE	-	-	-	-	-	-	-
----	I083815		B-9A	ISI	-	-	-	-	-	-	-
----	G2-BC-1-BA		1-1/2" BRANCH WELD	AUG	-	-	-	-	-	-	-
2	MS			OWN	-	-	-	-	-	-	-
				PRE	-	-	-	-	-	-	-
----	I083865		B-9A	ISI	-	-	-	-	-	-	-
----	A1		3/4" BRANCH WELD	AUG	-	-	-	-	-	-	-
2	MS			OWN	-	-	-	-	-	-	-
				PRE	-	-	-	-	-	-	-
----	I083915		B-9A	ISI	-	-	-	-	-	-	-
----	A2		3/4" BRANCH WELD	AUG	-	-	-	-	-	-	-
2	MS			OWN	-	-	-	-	-	-	-
				PRE	-	-	-	-	-	-	-

Category, ItemNO, Class	Summary / CompID / System	Scope / Method / Procedure	Iso No. Comp. Desc. Code Case		Period 1 00	Period 1 02	Period 2 03	Period 2 05	Period 2 06	Period 3 08	Period 3 09
----	I084455		B-8	ISI	-	-	-	-	-	-	-
----	AR1		1" BRANCH WELD	AUG	-	-	-	-	-	-	-
2	MS			OWN	-	-	-	-	-	-	-
				PRE	-	-	-	-	-	-	-
----	I084520		B-8	ISI	-	-	-	-	-	-	-
----	AA		1-1/2" BRANCH WELD	AUG	-	-	-	-	-	-	-
2	MS			OWN	-	-	-	-	-	-	-
				PRE	-	-	-	-	-	-	-
----	I084550		B-8	ISI	-	-	-	-	-	-	-
----	AB		3/4" BRANCH WELD	AUG	-	-	-	-	-	-	-
2	MS			OWN	-	-	-	-	-	-	-
				PRE	-	-	-	-	-	-	-
----	I084560		B-8	ISI	-	-	-	-	-	-	-
----	AD		3/4" BRANCH WELD	AUG	-	-	-	-	-	-	-
2	MS			OWN	-	-	-	-	-	-	-
				PRE	-	-	-	-	-	-	-
----	I084580		B-8	ISI	-	-	-	-	-	-	-
----	AC		3/4" BRANCH WELD	AUG	-	-	-	-	-	-	-
2	MS			OWN	-	-	-	-	-	-	-
				PRE	-	-	-	-	-	-	-
----	I084590		B-8	ISI	-	-	-	-	-	-	-
----	AE		3/4" BRANCH WELD	AUG	-	-	-	-	-	-	-
2	MS			OWN	-	-	-	-	-	-	-
				PRE	-	-	-	-	-	-	-
----	I084595		B-8	ISI	-	-	-	-	-	-	-
----	A1R1		1" BRANCH WELD	AUG	-	-	-	-	-	-	-
2	MS			OWN	-	-	-	-	-	-	-
				PRE	-	-	-	-	-	-	-
----	I088600		B-10A	ISI	-	-	-	-	-	-	-
----	K1		1/2" BRANCH WELD	AUG	-	-	-	-	-	-	-
2	MS			OWN	-	-	-	-	-	-	-
				PRE	-	-	-	-	-	-	-
----	I088620		B-10A	ISI	-	-	-	-	-	-	-
----	K2		1" BRANCH WELD	AUG	-	-	-	-	-	-	-
2	MS			OWN	-	-	-	-	-	-	-
				PRE	-	-	-	-	-	-	-
----	I088640		B-10A	ISI	-	-	-	-	-	-	-
----	K3		1" BRANCH WELD	AUG	-	-	-	-	-	-	-
2	MS			OWN	-	-	-	-	-	-	-
				PRE	-	-	-	-	-	-	-

Category, ItemNO, Class	Summary / CompID / System	Scope / Method / Procedure	Iso No. Comp. Desc. Code Case		Period 1 00	Period 1 02	Period 2 03	Period 2 05	Period 2 06	Period 3 08	Period 3 09
----	I088660		B-10A	ISI	-	-	-	-	-	-	-
----	K4		1" BRANCH WELD	AUG	-	-	-	-	-	-	-
2	MS			OWN	-	-	-	-	-	-	-
				PRE	-	-	-	-	-	-	-
----	I088680		B-10A	ISI	-	-	-	-	-	-	-
----	K5		1" BRANCH WELD	AUG	-	-	-	-	-	-	-
2	MS			OWN	-	-	-	-	-	-	-
				PRE	-	-	-	-	-	-	-
----	I089750		B-10	ISI	-	-	-	-	-	-	-
----	LA		1/2" BRANCH WELD	AUG	-	-	-	-	-	-	-
2	MS			OWN	-	-	-	-	-	-	-
				PRE	-	-	-	-	-	-	-
----	I090160		B-10	ISI	-	-	-	-	-	-	-
----	LB		1" BRANCH WELD	AUG	-	-	-	-	-	-	-
2	MS			OWN	-	-	-	-	-	-	-
				PRE	-	-	-	-	-	-	-
----	I090220		B-10	ISI	-	-	-	-	-	-	-
----	BWA		3" BRANCH WELD	AUG	-	-	-	-	-	-	-
2	MS			OWN	-	-	-	-	-	-	-
				PRE	-	-	-	-	-	-	-
----	I090318		B-10	ISI	-	-	-	-	-	-	-
----	L2-BC-1-BA		1-1/2" BRANCH WELD	AUG	-	-	-	-	-	-	-
2	MS			OWN	-	-	-	-	-	-	-
				PRE	-	-	-	-	-	-	-
----	I090330		B-10	ISI	-	-	-	-	-	-	-
----	A1		3/4" BRANCH WELD	AUG	-	-	-	-	-	-	-
2	MS			OWN	-	-	-	-	-	-	-
				PRE	-	-	-	-	-	-	-
----	I090405		B-10	ISI	-	-	-	-	-	-	-
----	A2		3/4" BRANCH WELD	AUG	-	-	-	-	-	-	-
2	MS			OWN	-	-	-	-	-	-	-
				PRE	-	-	-	-	-	-	-
----	I091050		B-11	ISI	-	-	-	-	-	-	-
----	XA		1" BRANCH WELD	AUG	-	-	-	-	-	-	-
2	FW			OWN	-	-	-	-	-	-	-
				PRE	-	-	-	-	-	-	-
----	I091130		B-11	ISI	-	-	-	-	-	-	-
----	ZAA		1" BRANCH WELD BYPASS	AUG	-	-	-	-	-	-	-
2	FW			OWN	-	-	-	-	-	-	-
				PRE	-	-	-	-	-	-	-

Category, ItemNO, Class	Summary / CompID / System	Scope / Method / Procedure	Iso No. Comp. Desc. Code Case		Period 1 00	Period 1 02	Period 2 03	Period 2 05	Period 2 06	Period 3 08	Period 3 09
---	I091160		B-11	ISI	-	-	-	-	-	-	-
---	ZAB		1" BRANCH WELD BYPASS	AUG	-	-	-	-	-	-	-
2	FW			OWN	-	-	-	-	-	-	-
				PRE	-	-	-	-	-	-	-
---	I091205		B-11	ISI	-	-	-	-	-	-	-
---	Z1A		1" BRANCH WELD	AUG	-	-	-	-	-	-	-
2	FW			OWN	-	-	-	-	-	-	-
				PRE	-	-	-	-	-	-	-
---	I091210		B-11	ISI	-	-	-	-	-	-	-
---	ZA		3" BRANCH WELD	AUG	-	-	-	-	-	-	-
2	FW			OWN	-	-	-	-	-	-	-
				PRE	-	-	-	-	-	-	-
---	I091230		B-11	ISI	-	-	-	-	-	-	-
---	ZB		3" BRANCH WELD	AUG	-	-	-	-	-	-	-
2	FW			OWN	-	-	-	-	-	-	-
				PRE	-	-	-	-	-	-	-
---	I091750		B-11	ISI	-	-	-	-	-	-	-
---	AA1		1/2" BRANCH WELD	AUG	-	-	-	-	-	-	-
2	FW			OWN	-	-	-	-	-	-	-
				PRE	-	-	-	-	-	-	-
---	I093350		B-12	ISI	-	-	-	-	-	-	-
---	DD2A		1" BRANCH WELD	AUG	-	-	-	-	-	-	-
2	FW			OWN	-	-	-	-	-	-	-
				PRE	-	-	-	-	-	-	-
---	I093850		B-12	ISI	-	-	-	-	-	-	-
---	DD6A		1" BRANCH WELD	AUG	-	-	-	-	-	-	-
2	FW			OWN	-	-	-	-	-	-	-
				PRE	-	-	-	-	-	-	-
---	I094550		B-14	ISI	-	-	-	-	-	-	-
---	MA		1" BRANCH WELD	AUG	-	-	-	-	-	-	-
2	FW			OWN	-	-	-	-	-	-	-
				PRE	-	-	-	-	-	-	-
---	I094630		B-14	ISI	-	-	-	-	-	-	-
---	N2C		1" BRANCH WELD	AUG	-	-	-	-	-	-	-
2	FW			OWN	-	-	-	-	-	-	-
				PRE	-	-	-	-	-	-	-
---	I094660		B-14	ISI	-	-	-	-	-	-	-
---	N2B		1" BRANCH WELD	AUG	-	-	-	-	-	-	-
2	FW			OWN	-	-	-	-	-	-	-
				PRE	-	-	-	-	-	-	-

Category, ItemNO, Class	Summary / CompID / System	Scope / Method / Procedure	Iso No. Comp. Desc. Code Case		Period 1 00	Period 1 02	Period 2 03	Period 2 05	Period 2 06	Period 3 08	Period 3 09
----	I094710		B-14	ISI	-	-	-	-	-	-	-
----	A2		1" BRANCH WELD	AUG	-	-	-	-	-	-	-
2	FW			OWN	-	-	-	-	-	-	-
				PRE	-	-	-	-	-	-	-
----	I094830		B-14	ISI	-	-	-	-	-	-	-
----	N1A		3" BRANCH WELD	AUG	-	-	-	-	-	-	-
2	FW			OWN	-	-	-	-	-	-	-
				PRE	-	-	-	-	-	-	-
----	I094840		B-14	ISI	-	-	-	-	-	-	-
----	N1B		3" BRANCH WELD	AUG	-	-	-	-	-	-	-
2	FW			OWN	-	-	-	-	-	-	-
				PRE	-	-	-	-	-	-	-
----	I094910		B-14	ISI	-	-	-	-	-	-	-
----	A1		1/2" BRANCH WELD	AUG	-	-	-	-	-	-	-
2	FW			OWN	-	-	-	-	-	-	-
				PRE	-	-	-	-	-	-	-
----	I098875		B-13	ISI	-	-	-	-	-	-	-
----	Z1A		1" BRANCH WELD	AUG	-	-	-	-	-	-	-
2	FW			OWN	-	-	-	-	-	-	-
				PRE	-	-	-	-	-	-	-
----	I099450		B-13	ISI	-	-	-	-	-	-	-
----	AA3A		1" BRANCH WELD	AUG	-	-	-	-	-	-	-
2	FW			OWN	-	-	-	-	-	-	-
				PRE	-	-	-	-	-	-	-
----	I100310		B-15	ISI	-	-	-	-	-	-	-
----	5M		2" BRANCH WELD	AUG	-	-	-	-	-	-	-
2	HPSI			OWN	-	-	-	-	-	-	-
				PRE	-	-	-	-	-	-	-
----	I102050		B-15	ISI	-	-	-	-	-	-	-
----	12MS		2" BRANCH WELD	AUG	-	-	-	-	-	-	-
2	HPSI			OWN	-	-	-	-	-	-	-
				PRE	-	-	-	-	-	-	-
----	I102420		B-15	ISI	-	-	-	-	-	-	-
----	24S		3/4" BRANCH WELD	AUG	-	-	-	-	-	-	-
2	HPSI			OWN	-	-	-	-	-	-	-
				PRE	-	-	-	-	-	-	-
----	I104050		B-16	ISI	-	-	-	-	-	-	-
----	6		3/4" BRANCH WELD	AUG	-	-	-	-	-	-	-
2	HPSI			OWN	-	-	-	-	-	-	-
				PRE	-	-	-	-	-	-	-

Category, ItemNO, Class	Summary / CompID / System	Scope / Method / Procedure	Iso No. Comp. Desc. Code Case		Period 1 00	Period 1 02	Period 2 03	Period 2 05	Period 2 06	Period 3 08	Period 3 09
----	I105920		B-16	ISI	-	-	-	-	-	-	-
----	7		3/4" BRANCH WELD	AUG	-	-	-	-	-	-	-
2	HPSI			OWN	-	-	-	-	-	-	-
				PRE	-	-	-	-	-	-	-
----	I108950		B-17	ISI	-	-	-	-	-	-	-
----	16A		2" BRANCH WELD	AUG	-	-	-	-	-	-	-
2	RHR			OWN	-	-	-	-	-	-	-
				PRE	-	-	-	-	-	-	-
----	I109650		B-17	ISI	-	-	-	-	-	-	-
----	20A		3/4" BRANCH WELD	AUG	-	-	-	-	-	-	-
2	RHR			OWN	-	-	-	-	-	-	-
				PRE	-	-	-	-	-	-	-
----	I110350		B-17	ISI	-	-	-	-	-	-	-
----	2A		3/4" BRANCH WELD	AUG	-	-	-	-	-	-	-
2	RHR			OWN	-	-	-	-	-	-	-
				PRE	-	-	-	-	-	-	-
----	I110550		B-17	ISI	-	-	-	-	-	-	-
----	4A		3/4" BRANCH WELD	AUG	-	-	-	-	-	-	-
2	RHR			OWN	-	-	-	-	-	-	-
				PRE	-	-	-	-	-	-	-
----	I111580		B-18	ISI	-	-	-	-	-	-	-
----	4A		3/4" BRANCH WELD	AUG	-	-	-	-	-	-	-
2	RHR			OWN	-	-	-	-	-	-	-
				PRE	-	-	-	-	-	-	-
----	I113150		B-18	ISI	-	-	-	-	-	-	-
----	15A		3/4" BRANCH WELD	AUG	-	-	-	-	-	-	-
2	RHR			OWN	-	-	-	-	-	-	-
				PRE	-	-	-	-	-	-	-
----	I122450		B-19	ISI	-	-	-	-	-	-	-
----	19N		3/4" BRANCH-TO-PIPE	AUG	-	-	-	-	-	-	-
2	HPSI			OWN	-	-	-	-	-	-	-
				PRE	-	-	-	-	-	-	-
----	I123025		B-16B	ISI	-	-	-	-	-	-	-
----	24		3/4" BRANCH-TO-TEE	AUG	-	-	-	-	-	-	-
2	HPSI			OWN	-	-	-	-	-	-	-
				PRE	-	-	-	-	-	-	-
----	I125650		B-19	ISI	-	-	-	-	-	-	-
----	8N		3/4" BRANCH-TO-PIPE	AUG	-	-	-	-	-	-	-
2	HPSI			OWN	-	-	-	-	-	-	-
				PRE	-	-	-	-	-	-	-

Category, ItemNO, Class	Summary / CompID / System	Scope / Method / Procedure	Iso No. Comp. Desc. Code Case		Period 1 00	Period 1 02	Period 2 03	Period 2 05	Period 2 06	Period 3 08	Period 3 09
----	I126270		B-20	ISI	-	-	-	-	-	-	-
----	2		BELL MOUTH-TO-FLANGE	AUG	-	-	-	-	-	-	-
2	RHR			OWN	-	-	-	-	-	-	-
				PRE	-	-	-	-	-	-	-
----	I126280		B-20	ISI	-	-	-	-	-	-	-
----	3		FLANGE-TO-REDUCER	AUG	-	-	-	-	-	-	-
2	RHR			OWN	-	-	-	-	-	-	-
				PRE	-	-	-	-	-	-	-
----	I126290		B-20	ISI	-	-	-	-	-	-	-
----	4		REDUCER-TO-VALVE 851B	AUG	-	-	-	-	-	-	-
2	RHR			OWN	-	-	-	-	-	-	-
				PRE	-	-	-	-	-	-	-
----	I126300		B-20	ISI	-	-	-	-	-	-	-
----	5		VALVE 851B-TO-REDUCER	AUG	-	-	-	-	-	-	-
2	RHR			OWN	-	-	-	-	-	-	-
				PRE	-	-	-	-	-	-	-
----	I126350		B-20	ISI	-	-	-	-	-	-	-
----	5A		REDUCER-TO-PIPE (PEN 142)	AUG	-	-	-	-	-	-	-
2	RHR			OWN	-	-	-	-	-	-	-
				PRE	-	-	-	-	-	-	-
----	I126400		B-20	ISI	-	-	-	-	-	-	-
----	6		PIPE-TO-TEE (PEN 142)	AUG	-	-	-	-	-	-	-
2	RHR			OWN	-	-	-	-	-	-	-
				PRE	-	-	-	-	-	-	-
----	I126500		B-20	ISI	-	-	-	-	-	-	-
----	7		TEE-TO-CAP	AUG	-	-	-	-	-	-	-
2	RHR			OWN	-	-	-	-	-	-	-
				PRE	-	-	-	-	-	-	-
----	I126600		B-20	ISI	-	-	-	-	-	-	-
----	8		TEE-TO-TEE	AUG	-	-	-	-	-	-	-
2	RHR			OWN	-	-	-	-	-	-	-
				PRE	-	-	-	-	-	-	-
----	I126700		B-20	ISI	-	-	-	-	-	-	-
----	9		TEE-TO-CAP	AUG	-	-	-	-	-	-	-
2	RHR			OWN	-	-	-	-	-	-	-
				PRE	-	-	-	-	-	-	-
----	I126800		B-20	ISI	-	-	-	-	-	-	-
----	10		TEE-TO-PIPE	AUG	-	-	-	-	-	-	-
2	RHR			OWN	-	-	-	-	-	-	-
				PRE	-	-	-	-	-	-	-

Category, ItemNO, Class	Summary / CompID / System	Scope / Method / Procedure	Iso No. Comp. Desc. Code Case		Period 1 00	Period 1 02	Period 2 03	Period 2 05	Period 2 06	Period 3 08	Period 3 09
----	I127000		B-20	ISI	-	-	-	-	-	-	-
----	11		PIPE-TO-ELBOW	AUG	-	-	-	-	-	-	-
2	RHR			OWN	-	-	-	-	-	-	-
				PRE	-	-	-	-	-	-	-
----	I127100		B-20	ISI	-	-	-	-	-	-	-
----	12		ELBOW-TO-PIPE	AUG	-	-	-	-	-	-	-
2	RHR			OWN	-	-	-	-	-	-	-
				PRE	-	-	-	-	-	-	-
----	I127200		B-20	ISI	-	-	-	-	-	-	-
----	13		PIPE-TO-ELBOW	AUG	-	-	-	-	-	-	-
2	RHR			OWN	-	-	-	-	-	-	-
				PRE	-	-	-	-	-	-	-
----	I127300		B-20	ISI	-	-	-	-	-	-	-
----	1		ELBOW-TO-TEE	AUG	-	-	-	-	-	-	-
2	RHR			OWN	-	-	-	-	-	-	-
				PRE	-	-	-	-	-	-	-
----	I127400		B-20	ISI	-	-	-	-	-	-	-
----	2		TEE-TO-VALVE 850B	AUG	-	-	-	-	-	-	-
2	RHR			OWN	-	-	-	-	-	-	-
				PRE	-	-	-	-	-	-	-
----	I127500		B-21	ISI	-	-	-	-	-	-	-
----	1		TEE-TO-PIPE	AUG	-	-	-	-	-	-	-
2	RHR			OWN	-	-	-	-	-	-	-
				PRE	-	-	-	-	-	-	-
----	I127600		B-21	ISI	-	-	-	-	-	-	-
----	1A		PIPE-TO-ELBOW	AUG	-	-	-	-	-	-	-
2	RHR			OWN	-	-	-	-	-	-	-
				PRE	-	-	-	-	-	-	-
----	I127700		B-21	ISI	-	-	-	-	-	-	-
----	2		ELBOW-TO-PIPE	AUG	-	-	-	-	-	-	-
2	RHR			OWN	-	-	-	-	-	-	-
				PRE	-	-	-	-	-	-	-
----	I127900		B-21	ISI	-	-	-	-	-	-	-
----	3		PIPE-TO-ELBOW	AUG	-	-	-	-	-	-	-
2	RHR			OWN	-	-	-	-	-	-	-
				PRE	-	-	-	-	-	-	-
----	I128000		B-21	ISI	-	-	-	-	-	-	-
----	4		ELBOW-TO-ELBOW	AUG	-	-	-	-	-	-	-
2	RHR			OWN	-	-	-	-	-	-	-
				PRE	-	-	-	-	-	-	-

Category, ItemNO, Class	Summary / CompID / System	Scope / Method / Procedure	Iso No. Comp. Desc. Code Case		Period 1 00	Period 1 02	Period 2 03	Period 2 05	Period 2 06	Period 3 08	Period 3 09
----	I128100		B-21	ISI	-	-	-	-	-	-	-
----	5		ELBOW-TO-PIPE	AUG	-	-	-	-	-	-	-
2	RHR			OWN	-	-	-	-	-	-	-
				PRE	-	-	-	-	-	-	-
----	I128200		B-21	ISI	-	-	-	-	-	-	-
----	6		PIPE-TO-ELBOW	AUG	-	-	-	-	-	-	-
2	RHR			OWN	-	-	-	-	-	-	-
				PRE	-	-	-	-	-	-	-
----	I128210		B-21	ISI	-	-	-	-	-	-	-
----	A1		3/4" BRANCH WELD	AUG	-	-	-	-	-	-	-
2	RHR			OWN	-	-	-	-	-	-	-
				PRE	-	-	-	-	-	-	-
----	I128500		B-21	ISI	-	-	-	-	-	-	-
----	7		ELBOW-TO-VALVE 1813B	AUG	-	-	-	-	-	-	-
2	RHR			OWN	-	-	-	-	-	-	-
				PRE	-	-	-	-	-	-	-
----	I128560		B-20A	ISI	-	-	-	-	-	-	-
----	1		BELL MOUTH-TO-FLANGE	AUG	-	-	-	-	-	-	-
2	RHR			OWN	-	-	-	-	-	-	-
				PRE	-	-	-	-	-	-	-
----	I128570		B-20A	ISI	-	-	-	-	-	-	-
----	2		FLANGE-TO-REDUCER	AUG	-	-	-	-	-	-	-
2	RHR			OWN	-	-	-	-	-	-	-
				PRE	-	-	-	-	-	-	-
----	I128580		B-20A	ISI	-	-	-	-	-	-	-
----	3		REDUCER-TO-VALVE 851A	AUG	-	-	-	-	-	-	-
2	RHR			OWN	-	-	-	-	-	-	-
				PRE	-	-	-	-	-	-	-
----	I128590		B-20A	ISI	-	-	-	-	-	-	-
----	4		VALVE 851A-TO-REDUCER	AUG	-	-	-	-	-	-	-
2	RHR			OWN	-	-	-	-	-	-	-
				PRE	-	-	-	-	-	-	-
----	I128600		B-20A	ISI	-	-	-	-	-	-	-
----	5		REDUCER-TO-PIPE (PEN 141)	AUG	-	-	-	-	-	-	-
2	RHR			OWN	-	-	-	-	-	-	-
				PRE	-	-	-	-	-	-	-
----	I128800		B-20A	ISI	-	-	-	-	-	-	-
----	7		TEE-TO-CAP	AUG	-	-	-	-	-	-	-
2	RHR			OWN	-	-	-	-	-	-	-
				PRE	-	-	-	-	-	-	-

Category, ItemNO, Class	Summary / CompID / System	Scope / Method / Procedure	Iso No. Comp. Desc. Code Case		Period 1 00	Period 1 02	Period 2 03	Period 2 05	Period 2 06	Period 3 08	Period 3 09
---	I128900		B-20A	ISI	-	-	-	-	-	-	-
---	8		TEE-TO-TEE	AUG	-	-	-	-	-	-	-
2	RHR			OWN	-	-	-	-	-	-	-
				PRE	-	-	-	-	-	-	-
---	I129000		B-20A	ISI	-	-	-	-	-	-	-
---	9		TEE-TO-CAP	AUG	-	-	-	-	-	-	-
2	RHR			OWN	-	-	-	-	-	-	-
				PRE	-	-	-	-	-	-	-
---	I129100		B-20A	ISI	-	-	-	-	-	-	-
---	10		TEE-TO-ELBOW	AUG	-	-	-	-	-	-	-
2	RHR			OWN	-	-	-	-	-	-	-
				PRE	-	-	-	-	-	-	-
---	I129400		B-20A	ISI	-	-	-	-	-	-	-
---	12		ELBOW-TO-ELBOW	AUG	-	-	-	-	-	-	-
2	RHR			OWN	-	-	-	-	-	-	-
				PRE	-	-	-	-	-	-	-
---	I129600		B-20A	ISI	-	-	-	-	-	-	-
---	1		ELBOW-TO-TEE	AUG	-	-	-	-	-	-	-
2	RHR			OWN	-	-	-	-	-	-	-
				PRE	-	-	-	-	-	-	-
---	I129800		B-20A	ISI	-	-	-	-	-	-	-
---	2		TEE-TO-VALVE 850A	AUG	-	-	-	-	-	-	-
2	RHR			OWN	-	-	-	-	-	-	-
				PRE	-	-	-	-	-	-	-
---	I129900		B-21	ISI	-	-	-	-	-	-	-
---	1		TEE-TO-PIPE	AUG	-	-	-	-	-	-	-
2	RHR			OWN	-	-	-	-	-	-	-
				PRE	-	-	-	-	-	-	-
---	I130000		B-21	ISI	-	-	-	-	-	-	-
---	2		PIPE-TO-ELBOW	AUG	-	-	-	-	-	-	-
2	RHR			OWN	-	-	-	-	-	-	-
				PRE	-	-	-	-	-	-	-
---	I130060		B-21	ISI	-	-	-	-	-	-	-
---	A2		3/4" BRANCH WELD	AUG	-	-	-	-	-	-	-
2	RHR			OWN	-	-	-	-	-	-	-
				PRE	-	-	-	-	-	-	-
---	I130100		B-21	ISI	-	-	-	-	-	-	-
---	3		ELBOW-TO-PIPE	AUG	-	-	-	-	-	-	-
2	RHR			OWN	-	-	-	-	-	-	-
				PRE	-	-	-	-	-	-	-

Category, ItemNO, Class	Summary / CompID / System	Scope / Method / Procedure	Iso No. Comp. Desc. Code Case		Period 1 00	Period 1 02	Period 2 03	Period 2 05	Period 2 06	Period 3 08	Period 3 09
----	I130200		B-21	ISI	-	-	-	-	-	-	-
----	4		PIPE-TO-VALVE 1813A	AUG	-	-	-	-	-	-	-
2	RHR			OWN	-	-	-	-	-	-	-
				PRE	-	-	-	-	-	-	-
----	I130550		B-20	ISI	-	-	-	-	-	-	-
----	3A		2" BRANCH WELD	AUG	-	-	-	-	-	-	-
2	RHR			OWN	-	-	-	-	-	-	-
				PRE	-	-	-	-	-	-	-
----	I130910		B-20	ISI	-	-	-	-	-	-	-
----	4A		4" BRANCH WELD	AUG	-	-	-	-	-	-	-
2	RHR			OWN	-	-	-	-	-	-	-
				PRE	-	-	-	-	-	-	-
----	I132850		B-20	ISI	-	-	-	-	-	-	-
----	23A		3/4" BRANCH WELD	AUG	-	-	-	-	-	-	-
2	RHR			OWN	-	-	-	-	-	-	-
				PRE	-	-	-	-	-	-	-
----	I133250		B-22	ISI	-	-	-	-	-	-	-
----	1B		3/4" BRANCH WELD	AUG	-	-	-	-	-	-	-
2	RHR			OWN	-	-	-	-	-	-	-
				PRE	-	-	-	-	-	-	-
----	I134950		B-22	ISI	-	-	-	-	-	-	-
----	8A		3/4" BRANCH WELD	AUG	-	-	-	-	-	-	-
2	RHR			OWN	-	-	-	-	-	-	-
				PRE	-	-	-	-	-	-	-
----	I135430		B-20A	ISI	-	-	-	-	-	-	-
----	13A		2" BRANCH WELD	AUG	-	-	-	-	-	-	-
2	RHR			OWN	-	-	-	-	-	-	-
				PRE	-	-	-	-	-	-	-
----	I135460		B-20A	ISI	-	-	-	-	-	-	-
----	13B		2" BRANCH WELD	AUG	-	-	-	-	-	-	-
2	RHR			OWN	-	-	-	-	-	-	-
				PRE	-	-	-	-	-	-	-
----	I137750		B-20A	ISI	-	-	-	-	-	-	-
----	7A		3/4" BRANCH WELD	AUG	-	-	-	-	-	-	-
2	RHR			OWN	-	-	-	-	-	-	-
				PRE	-	-	-	-	-	-	-
----	I139050		B-23	ISI	-	-	-	-	-	-	-
----	2A		3/4" BRANCH WELD	AUG	-	-	-	-	-	-	-
2	RHR			OWN	-	-	-	-	-	-	-
				PRE	-	-	-	-	-	-	-

Category, ItemNO, Class	Summary / CompID / System	Scope / Method / Procedure	Iso No. Comp. Desc. Code Case		Period 1 00	Period 1 02	Period 2 03	Period 2 05	Period 2 06	Period 3 08	Period 3 09
----	I140970		B-24	ISI	-	-	-	-	-	-	-
----	10A		3/4" BRANCH WELD	AUG	-	-	-	-	-	-	-
2	RHR			OWN	-	-	-	-	-	-	-
				PRE	-	-	-	-	-	-	-
----	I140975		B-24	ISI	-	-	-	-	-	-	-
----	10D		1/2" BRANCH WELD	AUG	-	-	-	-	-	-	-
2	RHR			OWN	-	-	-	-	-	-	-
				PRE	-	-	-	-	-	-	-
----	I140980		B-24	ISI	-	-	-	-	-	-	-
----	10B		3/4" BRANCH WELD	AUG	-	-	-	-	-	-	-
2	RHR			OWN	-	-	-	-	-	-	-
				PRE	-	-	-	-	-	-	-
----	I140990		B-24	ISI	-	-	-	-	-	-	-
----	10C		1" BRANCH WELD	AUG	-	-	-	-	-	-	-
2	RHR			OWN	-	-	-	-	-	-	-
				PRE	-	-	-	-	-	-	-
----	I141150		B-24	ISI	-	-	-	-	-	-	-
----	12A		3/4" BRANCH WELD	AUG	-	-	-	-	-	-	-
2	RHR			OWN	-	-	-	-	-	-	-
				PRE	-	-	-	-	-	-	-
----	I143150		B-24	ISI	-	-	-	-	-	-	-
----	11A		3/4" BRANCH WELD	AUG	-	-	-	-	-	-	-
2	RHR			OWN	-	-	-	-	-	-	-
				PRE	-	-	-	-	-	-	-
----	I143175		B-24	ISI	-	-	-	-	-	-	-
----	11B		1/2" BRANCH WELD	AUG	-	-	-	-	-	-	-
2	RHR			OWN	-	-	-	-	-	-	-
				PRE	-	-	-	-	-	-	-
----	I143350		B-24	ISI	-	-	-	-	-	-	-
----	13A		3/4" BRANCH WELD	AUG	-	-	-	-	-	-	-
2	RHR			OWN	-	-	-	-	-	-	-
				PRE	-	-	-	-	-	-	-
----	I144150		B-24	ISI	-	-	-	-	-	-	-
----	19A		2" BRANCH WELD	AUG	-	-	-	-	-	-	-
2	RHR			OWN	-	-	-	-	-	-	-
				PRE	-	-	-	-	-	-	-
----	I144750		B-23	ISI	-	-	-	-	-	-	-
----	3A		3/4" BRANCH WELD	AUG	-	-	-	-	-	-	-
2	RHR			OWN	-	-	-	-	-	-	-
				PRE	-	-	-	-	-	-	-

Category, ItemNO, Class	Summary / CompID / System	Scope / Method / Procedure	Iso No. Comp. Desc. Code Case		Period 1 00	Period 1 02	Period 2 03	Period 2 05	Period 2 06	Period 3 08	Period 3 09
----	I145700		B-26	ISI	-	-	-	-	-	-	-
----	1G		1" BRANCH WELD	AUG	-	-	-	-	-	-	-
2	RHR			OWN	-	-	-	-	-	-	-
				PRE	-	-	-	-	-	-	-
----	I145883		B-25	ISI	-	-	-	-	-	-	-
----	AA		3/4" BRANCH WELD	AUG	-	-	-	-	-	-	-
2	RHR			OWN	-	-	-	-	-	-	-
				PRE	-	-	-	-	-	-	-
----	I146475		B-26	ISI	-	-	-	-	-	-	-
----	8A		1" BRANCH WELD	AUG	-	-	-	-	-	-	-
2	RHR			OWN	-	-	-	-	-	-	-
				PRE	-	-	-	-	-	-	-
----	I148950		B-26	ISI	-	-	-	-	-	-	-
----	11A		3/4" BRANCH WELD	AUG	-	-	-	-	-	-	-
2	RHR			OWN	-	-	-	-	-	-	-
				PRE	-	-	-	-	-	-	-
----	I152640		B-25	ISI	-	-	-	-	-	-	-
----	8A		3/4" BRANCH-TO-VALVE(718A)	AUG	-	-	-	-	-	-	-
2	RHR			OWN	-	-	-	-	-	-	-
				PRE	-	-	-	-	-	-	-
----	I152660		B-25	ISI	-	-	-	-	-	-	-
----	8B		3/4" BRANCH-TO-VALVE(718B)	AUG	-	-	-	-	-	-	-
2	RHR			OWN	-	-	-	-	-	-	-
				PRE	-	-	-	-	-	-	-
----	I152820		B-25	ISI	-	-	-	-	-	-	-
----	9A		3/4" BRANCH WELD TO VALVE 958	AUG	-	-	-	-	-	-	-
2	RHR			OWN	-	-	-	-	-	-	-
				PRE	-	-	-	-	-	-	-
----	I152825		B-25	ISI	-	-	-	-	-	-	-
----	9D		2" BRANCH WELD TO VALVE 822B	AUG	-	-	-	-	-	-	-
2	RHR			OWN	-	-	-	-	-	-	-
				PRE	-	-	-	-	-	-	-
----	I152860		B-25	ISI	-	-	-	-	-	-	-
----	9B		3/4" BRANCH WELD TO VALVE 2279	AUG	-	-	-	-	-	-	-
2	RHR			OWN	-	-	-	-	-	-	-
				PRE	-	-	-	-	-	-	-
----	I152880		B-25	ISI	-	-	-	-	-	-	-
----	9C		3/4" BRANCH WELD TO VALVE TE-627	AUG	-	-	-	-	-	-	-
2	RHR			OWN	-	-	-	-	-	-	-
				PRE	-	-	-	-	-	-	-

Category, ItemNO, Class	Summary / CompID / System	Scope / Method / Procedure	Iso No. Comp. Desc. Code Case		Period 1 00	Period 1 02	Period 2 03	Period 2 05	Period 2 06	Period 3 08	Period 3 09
----	I153040		B-25	ISI	-	-	-	-	-	-	-
----	11A		1" BRANCH WELD	AUG	-	-	-	-	-	-	-
2	RHR			OWN	-	-	-	-	-	-	-
				PRE	-	-	-	-	-	-	-
----	I153080		B-25	ISI	-	-	-	-	-	-	-
----	11B		3/4" BRANCH WELD	AUG	-	-	-	-	-	-	-
2	RHR			OWN	-	-	-	-	-	-	-
				PRE	-	-	-	-	-	-	-
----	I155650		B-27	ISI	-	-	-	-	-	-	-
----	4A		3" BRANCH WELD	AUG	-	-	-	-	-	-	-
2	RHR			OWN	-	-	-	-	-	-	-
				PRE	-	-	-	-	-	-	-
----	I155840		B-27	ISI	-	-	-	-	-	-	-
----	5A		3/4" BRANCH WELD	AUG	-	-	-	-	-	-	-
2	RHR			OWN	-	-	-	-	-	-	-
				PRE	-	-	-	-	-	-	-
----	I155860		B-27	ISI	-	-	-	-	-	-	-
----	5B		3/4" BRANCH WELD	AUG	-	-	-	-	-	-	-
2	RHR			OWN	-	-	-	-	-	-	-
				PRE	-	-	-	-	-	-	-
----	I156350		B-27	ISI	-	-	-	-	-	-	-
----	8A		3/4" BRANCH WELD	AUG	-	-	-	-	-	-	-
2	RHR			OWN	-	-	-	-	-	-	-
				PRE	-	-	-	-	-	-	-
----	I158250		B-24	ISI	-	-	-	-	-	-	-
----	6A		2" BRANCH WELD	AUG	-	-	-	-	-	-	-
2	RHR			OWN	-	-	-	-	-	-	-
				PRE	-	-	-	-	-	-	-
----	I159450		B-19	ISI	-	-	-	-	-	-	-
----	A4A		2" BRANCH WELD (2D-SI-151, CS)	AUG	-	-	-	-	-	-	-
2	CS			OWN	-	-	-	-	-	-	-
				PRE	-	-	-	-	-	-	-
----	I159930		B-19	ISI	-	-	-	-	-	-	-
----	3		2" BRANCH WELD	AUG	-	-	-	-	-	-	-
2	CS			OWN	-	-	-	-	-	-	-
				PRE	-	-	-	-	-	-	-
----	I160430		B-19	ISI	-	-	-	-	-	-	-
----	3		2" BRANCH WELD	AUG	-	-	-	-	-	-	-
2	CS			OWN	-	-	-	-	-	-	-
				PRE	-	-	-	-	-	-	-

Category, ItemNO, Class	Summary / CompID / System	Scope / Method / Procedure	Iso No. Comp. Desc. Code Case		Period 1 00	Period 1 02	Period 2 03	Period 2 05	Period 2 06	Period 3 08	Period 3 09
----	I160650		B-16B	ISI	-	-	-	-	-	-	-
----	15		3/4" BRANCH WELD	AUG	-	-	-	-	-	-	-
2	HPSI			OWN	-	-	-	-	-	-	-
				PRE	-	-	-	-	-	-	-
----	I160700		B-16B	ISI	-	-	-	-	-	-	-
----	32		REDUCING ELBOW TO PIPE	AUG	-	-	-	-	-	-	-
2	RHR			OWN	-	-	-	-	-	-	-
				PRE	-	-	-	-	-	-	-
----	I160705		B-16B	ISI	-	-	-	-	-	-	-
----	33		PIPE-TO-ELBOW	AUG	-	-	-	-	-	-	-
2	RHR			OWN	-	-	-	-	-	-	-
				PRE	-	-	-	-	-	-	-
----	I160710		B-16B	ISI	-	-	-	-	-	-	-
----	34		ELBOW-TO-PIPE	AUG	-	-	-	-	-	-	-
2	RHR			OWN	-	-	-	-	-	-	-
				PRE	-	-	-	-	-	-	-
----	I160728		B-16B	ISI	-	-	-	-	-	-	-
----	35		PIPE-TO-TEE	AUG	-	-	-	-	-	-	-
2	RHR			OWN	-	-	-	-	-	-	-
				PRE	-	-	-	-	-	-	-
----	I161020		B-37	ISI	-	-	-	-	-	-	-
----	3		3/4" BRANCH WELD	AUG	-	-	-	-	-	-	-
2	HPSI			OWN	-	-	-	-	-	-	-
				PRE	-	-	-	-	-	-	-
----	I161050		B-37	ISI	-	-	-	-	-	-	-
----	6		3/4" BRANCH WELD	AUG	-	-	-	-	-	-	-
2	HPSI			OWN	-	-	-	-	-	-	-
				PRE	-	-	-	-	-	-	-
----	I161340		B-37	ISI	-	-	-	-	-	-	-
----	24		3/4" BRANCH WELD	AUG	-	-	-	-	-	-	-
2	HPSI			OWN	-	-	-	-	-	-	-
				PRE	-	-	-	-	-	-	-
----	I161440		B-38	ISI	-	-	-	-	-	-	-
----	32		3/4" BRANCH WELD	AUG	-	-	-	-	-	-	-
2	HPSI			OWN	-	-	-	-	-	-	-
				PRE	-	-	-	-	-	-	-
----	I161600		B-38	ISI	-	-	-	-	-	-	-
----	43		3/4" BRANCH WELD	AUG	-	-	-	-	-	-	-
2	HPSI			OWN	-	-	-	-	-	-	-
				PRE	-	-	-	-	-	-	-

Category, ItemNO, Class	Summary / CompID / System	Scope / Method / Procedure	Iso No. Comp. Desc. Code Case		Period 1 00	Period 1 02	Period 2 03	Period 2 05	Period 2 06	Period 3 08	Period 3 09
---	I161610		B-38	ISI	-	-	-	-	-	-	-
---	44		3/4" BRANCH WELD	AUG	-	-	-	-	-	-	-
2	HPSI			OWN	-	-	-	-	-	-	-
				PRE	-	-	-	-	-	-	-
---	I161770		B-39	ISI	-	-	-	-	-	-	-
---	7		3/4" BRANCH WELD	AUG	-	-	-	-	-	-	-
2	HPSI			OWN	-	-	-	-	-	-	-
				PRE	-	-	-	-	-	-	-
---	I162515		B-40	ISI	-	-	-	-	-	-	-
---	2A		1-1/2" BRANCH WELD	AUG	-	-	-	-	-	-	-
2	HPSI			OWN	-	-	-	-	-	-	-
				PRE	-	-	-	-	-	-	-
---	I162520		B-40	ISI	-	-	-	-	-	-	-
---	3		3/4" BRANCH WELD	AUG	-	-	-	-	-	-	-
2	HPSI			OWN	-	-	-	-	-	-	-
				PRE	-	-	-	-	-	-	-
---	I163120		B-41	ISI	-	-	-	-	-	-	-
---	11		3/4" BRANCH WELD ON TEE	AUG	-	-	-	-	-	-	-
2	HPSI			OWN	-	-	-	-	-	-	-
				PRE	-	-	-	-	-	-	-
---	I163520		B-42	ISI	-	-	-	-	-	-	-
---	3		3/4" BRANCH WELD	AUG	-	-	-	-	-	-	-
2	HPSI			OWN	-	-	-	-	-	-	-
				PRE	-	-	-	-	-	-	-
---	I163550		B-42	ISI	-	-	-	-	-	-	-
---	6		3/4" BRANCH WELD	AUG	-	-	-	-	-	-	-
2	HPSI			OWN	-	-	-	-	-	-	-
				PRE	-	-	-	-	-	-	-
---	I163870		B-42	ISI	-	-	-	-	-	-	-
---	26		3/4" BRANCH WELD	AUG	-	-	-	-	-	-	-
2	HPSI			OWN	-	-	-	-	-	-	-
				PRE	-	-	-	-	-	-	-
---	I163980		B-43	ISI	-	-	-	-	-	-	-
---	36		3/4" BRANCH WELD	AUG	-	-	-	-	-	-	-
2	HPSI			OWN	-	-	-	-	-	-	-
				PRE	-	-	-	-	-	-	-
---	I164210		B-43	ISI	-	-	-	-	-	-	-
---	48		3/4" BRANCH WELD	AUG	-	-	-	-	-	-	-
2	HPSI			OWN	-	-	-	-	-	-	-
				PRE	-	-	-	-	-	-	-

Category, ItemNO, Class	Summary / CompID / System	Scope / Method / Procedure	Iso No. Comp. Desc. Code Case		Period 1 00	Period 1 02	Period 2 03	Period 2 05	Period 2 06	Period 3 08	Period 3 09
----	I164280		B-43	ISI	-	-	-	-	-	-	-
----	54		3/4" BRANCH WELD (FE-125)	AUG	-	-	-	-	-	-	-
2	HPSI			OWN	-	-	-	-	-	-	-
				PRE	-	-	-	-	-	-	-
----	I164290		B-43	ISI	-	-	-	-	-	-	-
----	55		3/4" BRANCH WELD (FE-125)	AUG	-	-	-	-	-	-	-
2	HPSI			OWN	-	-	-	-	-	-	-
				PRE	-	-	-	-	-	-	-
----	I166000		B-46	ISI	-	-	-	-	-	-	-
----	1A		FLANGE TO REDUCER (CS PUMP A OUT)	AUG	-	-	-	-	-	-	-
2	CS			OWN	-	-	-	-	-	-	-
				PRE	-	-	-	-	-	-	-
----	I166500		B-46	ISI	-	-	-	-	-	-	-
----	1		2" BRANCH WELD	AUG	-	-	-	-	-	-	-
2	CS			OWN	-	-	-	-	-	-	-
				PRE	-	-	-	-	-	-	-
----	I167500		B-47	ISI	-	-	-	-	-	-	-
----	1		FLANGE-TO-REDUCER (CS PUMP B OUT)	AUG	-	-	-	-	-	-	-
2	CS			OWN	-	-	-	-	-	-	-
				PRE	-	-	-	-	-	-	-
----	I168000		B-47	ISI	-	-	-	-	-	-	-
----	1		2" BRANCH WELD	AUG	-	-	-	-	-	-	-
2	CS			OWN	-	-	-	-	-	-	-
				PRE	-	-	-	-	-	-	-
----	I169100		B-109	ISI	-	-	-	-	-	-	-
----	1A-A		NOZZLE TO VESSEL WELD	AUG	-	-	-	-	-	-	-
2	RHR			OWN	-	-	-	-	-	-	-
				PRE	-	-	-	-	-	-	-
----	I169110		B-109	ISI	-	-	-	-	-	-	-
----	1A-B		NOZZLE TO VESSEL WELD	AUG	-	-	-	-	-	-	-
2	RHR			OWN	-	-	-	-	-	-	-
				PRE	-	-	-	-	-	-	-
----	I169120		B-109	ISI	-	-	-	-	-	-	-
----	1A-C		NOZZLE TO VESSEL WELD	AUG	-	-	-	-	-	-	-
2	RHR			OWN	-	-	-	-	-	-	-
				PRE	-	-	-	-	-	-	-
----	I169300		B-109	ISI	-	-	-	-	-	-	-
----	1B-A		NOZZLE TO VESSEL WELD	AUG	-	-	-	-	-	-	-
2	RHR			OWN	-	-	-	-	-	-	-
				PRE	-	-	-	-	-	-	-

Category, ItemNO, Class	Summary / CompID / System	Scope / Method / Procedure	Iso No. Comp. Desc. Code Case		Period 1 00	Period 1 02	Period 2 03	Period 2 05	Period 2 06	Period 3 08	Period 3 09
---	I169310		B-109	ISI	-	-	-	-	-	-	-
---	1B-B		NOZZLE TO VESSEL WELD	AUG	-	-	-	-	-	-	-
2	RHR			OWN	-	-	-	-	-	-	-
				PRE	-	-	-	-	-	-	-
---	I169320		B-109	ISI	-	-	-	-	-	-	-
---	1B-C		NOZZLE TO VESSEL WELD	AUG	-	-	-	-	-	-	-
2	RHR			OWN	-	-	-	-	-	-	-
				PRE	-	-	-	-	-	-	-
---	I173015		B-50	ISI	-	-	-	-	-	-	-
---	2A		3/4" BRANCH WELD	AUG	-	-	-	-	-	-	-
2	SW			OWN	-	-	-	-	-	-	-
				PRE	-	-	-	-	-	-	-
---	I173180		B-50	ISI	-	-	-	-	-	-	-
---	15A		2-1/2" BRANCH WELD	AUG	-	-	-	-	-	-	-
2	SW			OWN	-	-	-	-	-	-	-
				PRE	-	-	-	-	-	-	-
---	I173365		B-50A	ISI	-	-	-	-	-	-	-
---	29A		1-1/2" BRANCH WELD	AUG	-	-	-	-	-	-	-
2	SW			OWN	-	-	-	-	-	-	-
				PRE	-	-	-	-	-	-	-
---	I173525		B-50A	ISI	-	-	-	-	-	-	-
---	42A		1" BRANCH WELD	AUG	-	-	-	-	-	-	-
2	SW			OWN	-	-	-	-	-	-	-
				PRE	-	-	-	-	-	-	-
---	I173575		B-50A	ISI	-	-	-	-	-	-	-
---	45A		3/4" BRANCH WELD	AUG	-	-	-	-	-	-	-
2	SW			OWN	-	-	-	-	-	-	-
				PRE	-	-	-	-	-	-	-
---	I173605		B-51	ISI	-	-	-	-	-	-	-
---	2A		1/2" BRANCH WELD	AUG	-	-	-	-	-	-	-
2	SW			OWN	-	-	-	-	-	-	-
				PRE	-	-	-	-	-	-	-
---	I173635		B-51	ISI	-	-	-	-	-	-	-
---	3A		1" BRANCH WELD	AUG	-	-	-	-	-	-	-
2	SW			OWN	-	-	-	-	-	-	-
				PRE	-	-	-	-	-	-	-
---	I173850		B-51	ISI	-	-	-	-	-	-	-
---	19A		2-1/2" BRANCH WELD	AUG	-	-	-	-	-	-	-
2	SW			OWN	-	-	-	-	-	-	-
				PRE	-	-	-	-	-	-	-

Category, ItemNO, Class	Summary / CompID / System	Scope / Method / Procedure	Iso No. Comp. Desc. Code Case		Period 1 00	Period 1 02	Period 2 03	Period 2 05	Period 2 06	Period 3 08	Period 3 09
---	I173895		B-51A	ISI	-	-	-	-	-	-	-
---	21A		1/2" BRANCH WELD	AUG	-	-	-	-	-	-	-
2	SW			OWN	-	-	-	-	-	-	-
				PRE	-	-	-	-	-	-	-
---	I174090		B-51C	ISI	-	-	-	-	-	-	-
---	38A		2-1/2" BRANCH WELD	AUG	-	-	-	-	-	-	-
2	SW			OWN	-	-	-	-	-	-	-
				PRE	-	-	-	-	-	-	-
---	I174315		B-51C	ISI	-	-	-	-	-	-	-
---	54A		1" BRANCH WELD	AUG	-	-	-	-	-	-	-
2	SW			OWN	-	-	-	-	-	-	-
				PRE	-	-	-	-	-	-	-
---	I174345		B-51C	ISI	-	-	-	-	-	-	-
---	57A		3/4" BRANCH WELD	AUG	-	-	-	-	-	-	-
2	SW			OWN	-	-	-	-	-	-	-
				PRE	-	-	-	-	-	-	-
---	I174375		B-52	ISI	-	-	-	-	-	-	-
---	2A		1/2" BRANCH WELD	AUG	-	-	-	-	-	-	-
2	SW			OWN	-	-	-	-	-	-	-
				PRE	-	-	-	-	-	-	-
---	I174385		B-52	ISI	-	-	-	-	-	-	-
---	3A		1" BRANCH WELD	AUG	-	-	-	-	-	-	-
2	SW			OWN	-	-	-	-	-	-	-
				PRE	-	-	-	-	-	-	-
---	I174700		B-52	ISI	-	-	-	-	-	-	-
---	20A		2-1/2" BRANCH WELD	AUG	-	-	-	-	-	-	-
2	SW			OWN	-	-	-	-	-	-	-
				PRE	-	-	-	-	-	-	-
---	I174775		B-52A	ISI	-	-	-	-	-	-	-
---	22A		3/4" BRANCH WELD	AUG	-	-	-	-	-	-	-
2	SW			OWN	-	-	-	-	-	-	-
				PRE	-	-	-	-	-	-	-
---	I174830		B-52B	ISI	-	-	-	-	-	-	-
---	28		3" BRANCH WELD	AUG	-	-	-	-	-	-	-
2	SW			OWN	-	-	-	-	-	-	-
				PRE	-	-	-	-	-	-	-
---	I174930		B-52B	ISI	-	-	-	-	-	-	-
---	34A		2-1/2" BRANCH WELD	AUG	-	-	-	-	-	-	-
2	SW			OWN	-	-	-	-	-	-	-
				PRE	-	-	-	-	-	-	-

Category, ItemNO, Class	Summary / CompID / System	Scope / Method / Procedure	Iso No. Comp. Desc. Code Case		Period 1 00	Period 1 02	Period 2 03	Period 2 05	Period 2 06	Period 3 08	Period 3 09
----	I175225		B-52B	ISI	-	-	-	-	-	-	-
----	53A		1" BRANCH WELD	AUG	-	-	-	-	-	-	-
2	SW			OWN	-	-	-	-	-	-	-
				PRE	-	-	-	-	-	-	-
----	I175255		B-52B	ISI	-	-	-	-	-	-	-
----	56A		3/4" BRANCH WELD	AUG	-	-	-	-	-	-	-
2	SW			OWN	-	-	-	-	-	-	-
				PRE	-	-	-	-	-	-	-
----	I175315		B-53	ISI	-	-	-	-	-	-	-
----	3A		1" BRANCH WELD	AUG	-	-	-	-	-	-	-
2	SW			OWN	-	-	-	-	-	-	-
				PRE	-	-	-	-	-	-	-
----	I175450		B-53	ISI	-	-	-	-	-	-	-
----	11B		2-1/2" BRANCH WELD	AUG	-	-	-	-	-	-	-
2	SW			OWN	-	-	-	-	-	-	-
				PRE	-	-	-	-	-	-	-
----	I175485		B-53	ISI	-	-	-	-	-	-	-
----	11C		3/4" BRANCH WELD	AUG	-	-	-	-	-	-	-
2	SW			OWN	-	-	-	-	-	-	-
				PRE	-	-	-	-	-	-	-
----	I175690		B-53A	ISI	-	-	-	-	-	-	-
----	28A		2-1/2" BRANCH WELD	AUG	-	-	-	-	-	-	-
2	SW			OWN	-	-	-	-	-	-	-
				PRE	-	-	-	-	-	-	-
----	I175905		B-53A	ISI	-	-	-	-	-	-	-
----	41A		1" BRANCH WELD	AUG	-	-	-	-	-	-	-
2	SW			OWN	-	-	-	-	-	-	-
				PRE	-	-	-	-	-	-	-
----	I175935		B-53A	ISI	-	-	-	-	-	-	-
----	44A		3/4" BRANCH WELD	AUG	-	-	-	-	-	-	-
2	SW			OWN	-	-	-	-	-	-	-
				PRE	-	-	-	-	-	-	-
----	I177000		A-24	ISI	-	-	-	-	-	-	-
----	13		200A VALVE-TO-PIPE	AUG	-	-	-	-	-	-	-
2	CVCS-LTDN			OWN	-	-	-	-	-	-	-
				PRE	-	-	-	-	-	-	-
----	I057300	OWN/UT/UT-402	A-6	ISI	-	-	-	-	-	-	-
BOLT	RCP-A ANCHOR BOLTS		BOLTS	AUG	-	-	-	-	-	-	-
1	RC			OWN	-	-	c	-	-	-	-
				PRE	-	-	-	-	-	-	-

Category, ItemNO, Class	Summary / CompID / System	Scope / Method / Procedure	Iso No. Comp. Desc. Code Case		Period 1 00	Period 1 02	Period 2 03	Period 2 05	Period 2 06	Period 3 08	Period 3 09
---	I058120	OWN/VT/VT-108	A-6	ISI	-	-	-	-	-	-	-
BOLT	RCP-B ANCHOR BOLTS	OWN/UT/UT-402	BOLTS	AUG	-	-	-	-	-	-	-
1	RC	OWN/VT/VT-108		OWN	c	-	B	-	-	-	-
		OWN/UT/UT-401		PRE	-	-	-	-	-	-	-
---	I060000		A-13	ISI	-	-	-	-	-	-	-
BOLT	V-434 (BOLTING)		4" CROSBY RELIEF VALVE	AUG	-	-	-	-	-	-	-
1	PZR			OWN	-	-	-	-	-	-	-
				PRE	-	-	-	-	-	-	-
---	I060100		A-13	ISI	-	-	-	-	-	-	-
BOLT	V-435 (BOLTING)		4" CROSBY RELIEF VALVE	AUG	-	-	-	-	-	-	-
1	PZR			OWN	-	-	-	-	-	-	-
				PRE	-	-	-	-	-	-	-
---	I060200		A-12	ISI	-	-	-	-	-	-	-
BOLT	V-430 (BOLTING)		3" COPES-VULCAN CONTROL VALVE	AUG	-	-	-	-	-	-	-
1	PZR			OWN	-	-	-	-	-	-	-
				PRE	-	-	-	-	-	-	-
---	I060300		A-9	ISI	-	-	-	-	-	-	-
BOLT	V-431A (BOLTING)		3" COPES-VULCAN CONTROL VALVE	AUG	-	-	-	-	-	-	-
1	PZR			OWN	-	-	-	-	-	-	-
				PRE	-	-	-	-	-	-	-
---	I060400		A-9	ISI	-	-	-	-	-	-	-
BOLT	V-431B (BOLTING)		3" COPES-VULCAN CONTROL VALVE	AUG	-	-	-	-	-	-	-
1	PZR			OWN	-	-	-	-	-	-	-
				PRE	-	-	-	-	-	-	-
---	I060500		A-12	ISI	-	-	-	-	-	-	-
BOLT	V-431C (BOLTING)		3" COPES-VULCAN CONTROL VALVE	AUG	-	-	-	-	-	-	-
1	PZR			OWN	-	-	-	-	-	-	-
				PRE	-	-	-	-	-	-	-
---	I060600		A-12	ISI	-	-	-	-	-	-	-
BOLT	V-515 (BOLTING)		3" VELAN MOTOR OPER.GATE VALVE	AUG	-	-	-	-	-	-	-
1	PZR			OWN	-	-	-	-	-	-	-
				PRE	-	-	-	-	-	-	-
---	I060700		A-12	ISI	-	-	-	-	-	-	-
BOLT	V-516 (BOLTING)		3" VELAN MOTOR OPER.GATE VALVE	AUG	-	-	-	-	-	-	-
1	PZR			OWN	-	-	-	-	-	-	-
				PRE	-	-	-	-	-	-	-
---	I060800		A-24	ISI	-	-	-	-	-	-	-
BOLT	V-200A (BOLTING)		2" COPES-VULCAN CONTROL VALVE	AUG	-	-	-	-	-	-	-
1	CVCS-LTDN			OWN	-	-	-	-	-	-	-
				PRE	-	-	-	-	-	-	-

Category, ItemNO, Class	Summary / CompID / System	Scope / Method / Procedure	Iso No. Comp. Desc. Code Case		Period 1 00	Period 1 02	Period 2 03	Period 2 05	Period 2 06	Period 3 08	Period 3 09
---	I060900		A-24	ISI	-	-	-	-	-	-	-
BOLT	V-200B (BOLTING)		2" COPES-VULCAN CONTROL VALVE	AUG	-	-	-	-	-	-	-
1	CVCS-LTDN			OWN	-	-	-	-	-	-	-
				PRE	-	-	-	-	-	-	-
---	I070000		A-24	ISI	-	-	-	-	-	-	-
BOLT	V-202 (BOLTING)		2" COPES-VULCAN CONTROL VALVE	AUG	-	-	-	-	-	-	-
1	CVCS-LTDN			OWN	-	-	-	-	-	-	-
				PRE	-	-	-	-	-	-	-
---	I070100		A-25A	ISI	-	-	-	-	-	-	-
BOLT	V-294 (BOLTING)		2" COPES-VULCAN CONTROL VALVE	AUG	-	-	-	-	-	-	-
2	CVCS-CHRG			OWN	-	-	-	-	-	-	-
				PRE	-	-	-	-	-	-	-
---	I070200		A-11	ISI	-	-	-	-	-	-	-
BOLT	V-296 (BOLTING)		2" COPES-VULCAN CONTROL VALVE	AUG	-	-	-	-	-	-	-
2	CVCS-CHRG			OWN	-	-	-	-	-	-	-
				PRE	-	-	-	-	-	-	-
---	I070300		A-27	ISI	-	-	-	-	-	-	-
BOLT	V-392A (BOLTING)		2" COPES-VULCAN CONTROL VALVE	AUG	-	-	-	-	-	-	-
2	CVCS-CHRG			OWN	-	-	-	-	-	-	-
				PRE	-	-	-	-	-	-	-
---	I070400		A-26	ISI	-	-	-	-	-	-	-
BOLT	V-392B (BOLTING)		2" COPES-VULCAN CONTROL VALVE	AUG	-	-	-	-	-	-	-
1	CVCS-CHRG			OWN	-	-	-	-	-	-	-
				PRE	-	-	-	-	-	-	-
---	I070500		A-23	ISI	-	-	-	-	-	-	-
BOLT	V-427 (BOLTING)		2" COPES-VULCAN CONTROL VALVE	AUG	-	-	-	-	-	-	-
1	RC			OWN	-	-	-	-	-	-	-
				PRE	-	-	-	-	-	-	-
---	I072240		B-2	ISI	-	-	-	-	-	-	-
BOLT	FB		7/8" DIA. BOLTS	AUG	-	-	-	-	-	-	-
3	CVCS-LTDN			OWN	-	-	-	-	-	-	-
				PRE	-	-	-	-	-	-	-
---	I072510		B-3	ISI	-	-	-	-	-	-	-
BOLT	FB		5/8" DIA. BOLTS	AUG	-	-	-	-	-	-	-
Q	CVCS-CHRG			OWN	-	-	-	-	-	-	-
				PRE	-	-	-	-	-	-	-
---	I073110		B-4	ISI	-	-	-	-	-	-	-
BOLT	FB		7/8" DIA. BOLTS	AUG	-	-	-	-	-	-	-
3	CVCS-CHRG			OWN	-	-	-	-	-	-	-
				PRE	-	-	-	-	-	-	-

Category, ItemNO, Class	Summary / CompID / System	Scope / Method / Procedure	Iso No. Comp. Desc. Code Case		Period 1 00	Period 1 02	Period 2 03	Period 2 05	Period 2 06	Period 3 08	Period 3 09
----	I074350		B-3	ISI	-	-	-	-	-	-	-
BOLT	FB		5/8" DIA. BOLTS	AUG	-	-	-	-	-	-	-
Q	CVCS-LTDN			OWN	-	-	-	-	-	-	-
				PRE	-	-	-	-	-	-	-
----	I078425		B-7	ISI	-	-	-	-	-	-	-
BOLT	PRESSURE RETAINING BOLTING		16 EA. HEAD BOLTS, 5/8"	AUG	-	-	-	-	-	-	-
2	CVCS-CHRG			OWN	-	-	-	-	-	-	-
				PRE	-	-	-	-	-	-	-
----	I078925		B-7	ISI	-	-	-	-	-	-	-
BOLT	PRESSURE RETAINING BOLTING		16 EA. HEAD BOTLS, 5/8"	AUG	-	-	-	-	-	-	-
2	CVCS-CHRG			OWN	-	-	-	-	-	-	-
				PRE	-	-	-	-	-	-	-
----	I078930		B-28	ISI	-	-	-	-	-	-	-
BOLT	RHR PUMP A SHELL BOLTING		END SHELL BOLTING (20)X(1.125")X(5 3/4")	AUG	-	-	-	-	-	-	-
2	RHR			OWN	-	-	-	-	-	-	-
				PRE	-	-	-	-	-	-	-
----	I078935		B-28	ISI	-	-	-	-	-	-	-
BOLT	RHR PUMP A INLET FLG BOLTING		INLET FLANGE BOLTING (?) X <2"	AUG	-	-	-	-	-	-	-
2	RHR			OWN	-	-	-	-	-	-	-
				PRE	-	-	-	-	-	-	-
----	I078936		B-28	ISI	-	-	-	-	-	-	-
BOLT	RHR PUMP A OUTLET FLG BOLTING		OUTLET FLANGE BOLTING (?) X <2"	AUG	-	-	-	-	-	-	-
2	RHR			OWN	-	-	-	-	-	-	-
				PRE	-	-	-	-	-	-	-
----	I078955		B-28	ISI	-	-	-	-	-	-	-
BOLT	RHR PUMP B SHELL BOLTING		END SHELL BOLTING (12) X 1.125"	AUG	-	-	-	-	-	-	-
2	RHR			OWN	-	-	-	-	-	-	-
				PRE	-	-	-	-	-	-	-
----	I078960		B-28	ISI	-	-	-	-	-	-	-
BOLT	RHR PUMP B INLET FLG BOLTING		INLET FLANGE BOLTING (?) X <2"	AUG	-	-	-	-	-	-	-
2	RHR			OWN	-	-	-	-	-	-	-
				PRE	-	-	-	-	-	-	-
----	I078961		B-28	ISI	-	-	-	-	-	-	-
BOLT	RHR PUMP B OUTLET FLG BOLTING		OUTLET FLANGE BOLTING (?) X <2"	AUG	-	-	-	-	-	-	-
2	RHR			OWN	-	-	-	-	-	-	-
				PRE	-	-	-	-	-	-	-
----	I083860		B-9A	ISI	-	-	-	-	-	-	-
BOLT	G2-BC-2-B-BT		BOLTING (<2")	AUG	-	-	-	-	-	-	-
2	MS			OWN	-	-	-	-	-	-	-
				PRE	-	-	-	-	-	-	-

Category, ItemNO, Class	Summary / CompID / System	Scope / Method / Procedure	Iso No. Comp. Desc. Code Case		Period 1 00	Period 1 02	Period 2 03	Period 2 05	Period 2 06	Period 3 08	Period 3 09
---	I083880		B-9A	ISI	-	-	-	-	-	-	-
BOLT	G2-BC-2-C-BT		BOLTING (<2")	AUG	-	-	-	-	-	-	-
2	MS			OWN	-	-	-	-	-	-	-
				PRE	-	-	-	-	-	-	-
---	I084010		B-9A	ISI	-	-	-	-	-	-	-
BOLT	G3-BC1-A-BT		BOLTING (<2")	AUG	-	-	-	-	-	-	-
2	MS			OWN	-	-	-	-	-	-	-
				PRE	-	-	-	-	-	-	-
---	I084110		B-9A	ISI	-	-	-	-	-	-	-
BOLT	G3-BC2-A-BT		BOLTING (<2")	AUG	-	-	-	-	-	-	-
2	MS			OWN	-	-	-	-	-	-	-
				PRE	-	-	-	-	-	-	-
---	I084210		B-9A	ISI	-	-	-	-	-	-	-
BOLT	G3-BC3-A-BT		BOLTING (<2")	AUG	-	-	-	-	-	-	-
2	MS			OWN	-	-	-	-	-	-	-
				PRE	-	-	-	-	-	-	-
---	I084310		B-9A	ISI	-	-	-	-	-	-	-
BOLT	G3-BC4-A-BT		BOLTING (<2")	AUG	-	-	-	-	-	-	-
2	MS			OWN	-	-	-	-	-	-	-
				PRE	-	-	-	-	-	-	-
---	I090360		B-10	ISI	-	-	-	-	-	-	-
BOLT	L2-BC-2-C-BT		BOLTING (<2")	AUG	-	-	-	-	-	-	-
2	MS			OWN	-	-	-	-	-	-	-
				PRE	-	-	-	-	-	-	-
---	I090410		B-10	ISI	-	-	-	-	-	-	-
BOLT	L2-BC-2B-BT		BOLTING (<2")	AUG	-	-	-	-	-	-	-
2	MS			OWN	-	-	-	-	-	-	-
				PRE	-	-	-	-	-	-	-
---	I090510		B-10	ISI	-	-	-	-	-	-	-
BOLT	L3-BC-1A-BT		BOLTING (<2")	AUG	-	-	-	-	-	-	-
2	MS			OWN	-	-	-	-	-	-	-
				PRE	-	-	-	-	-	-	-
---	I090610		B-10	ISI	-	-	-	-	-	-	-
BOLT	L3-BC-2A-BT		BOLTING (<2")	AUG	-	-	-	-	-	-	-
2	MS			OWN	-	-	-	-	-	-	-
				PRE	-	-	-	-	-	-	-
---	I090710		B-10	ISI	-	-	-	-	-	-	-
BOLT	L3-BC-3A-BT		BOLTING (<2")	AUG	-	-	-	-	-	-	-
2	MS			OWN	-	-	-	-	-	-	-
				PRE	-	-	-	-	-	-	-

Category, ItemNO, Class	Summary / CompID / System	Scope / Method / Procedure	Iso No. Comp. Desc. Code Case		Period 1 00	Period 1 02	Period 2 03	Period 2 05	Period 2 06	Period 3 08	Period 3 09
---	I090810		B-10	ISI	-	-	-	-	-	-	-
BOLT	L3-BC-4A-BT		BOLTING (<2")	AUG	-	-	-	-	-	-	-
2	MS			OWN	-	-	-	-	-	-	-
				PRE	-	-	-	-	-	-	-
---	I169190		B-109	ISI	-	-	-	-	-	-	-
BOLT	1A-BT		BOLTING - (44) X 1.5"	AUG	-	-	-	-	-	-	-
2	RHR			OWN	-	-	-	-	-	-	-
				PRE	-	-	-	-	-	-	-
---	I169390		B-109	ISI	-	-	-	-	-	-	-
BOLT	1B-BT		BOLTING (44) X 1.5"	AUG	-	-	-	-	-	-	-
2	RHR			OWN	-	-	-	-	-	-	-
				PRE	-	-	-	-	-	-	-
---	I172010		B-19	ISI	-	-	-	-	-	-	-
BOLT	SIAPSC1-IFB		INLET FLANGE BOLTS	AUG	-	-	-	-	-	-	-
2	CS			OWN	-	-	-	-	-	-	-
				PRE	-	-	-	-	-	-	-
---	I172020		B-46	ISI	-	-	-	-	-	-	-
BOLT	SIAPSC1-OFB		OUTLET FLANGE BOLTS	AUG	-	-	-	-	-	-	-
2	CS			OWN	-	-	-	-	-	-	-
				PRE	-	-	-	-	-	-	-
---	I172040		B-19	ISI	-	-	-	-	-	-	-
BOLT	SIAPSC2-IFB		INLET FLANGE BOLTS	AUG	-	-	-	-	-	-	-
2	CS			OWN	-	-	-	-	-	-	-
				PRE	-	-	-	-	-	-	-
---	I172050		B-47	ISI	-	-	-	-	-	-	-
BOLT	SIAPSC2-OFB		OUTLET FLANGE BOLTS	AUG	-	-	-	-	-	-	-
2	CS			OWN	-	-	-	-	-	-	-
				PRE	-	-	-	-	-	-	-
---	I172320		B-16B	ISI	-	-	-	-	-	-	-
BOLT	SIAPSI-1		INLET FLANGE BOLTS	AUG	-	-	-	-	-	-	-
2	HPSI			OWN	-	-	-	-	-	-	-
				PRE	-	-	-	-	-	-	-
---	I172340		B-37	ISI	-	-	-	-	-	-	-
BOLT	SIAPSI-1		OUTLET FLANGE BOLTS	AUG	-	-	-	-	-	-	-
2	HPSI			OWN	-	-	-	-	-	-	-
				PRE	-	-	-	-	-	-	-
---	I172360		B-37	ISI	-	-	-	-	-	-	-
BOLT	SIAPSI-1		PUMP BODY BOLTING	AUG	-	-	-	-	-	-	-
2	HPSI			OWN	-	-	-	-	-	-	-
				PRE	-	-	-	-	-	-	-

Category, ItemNO, Class	Summary / CompID / System	Scope / Method / Procedure	Iso No. Comp. Desc. Code Case		Period 1 00	Period 1 02	Period 2 03	Period 2 05	Period 2 06	Period 3 08	Period 3 09
----	I172420		B-16B	ISI	-	-	-	-	-	-	-
BOLT	SIAPSI-3		INLET FLANGE BOLTS	AUG	-	-	-	-	-	-	-
2	HPSI			OWN	-	-	-	-	-	-	-
				PRE	-	-	-	-	-	-	-
----	I172440		B-42	ISI	-	-	-	-	-	-	-
BOLT	SIAPSI-3		OUTLET FLANGE BOLTS	AUG	-	-	-	-	-	-	-
2	HPSI			OWN	-	-	-	-	-	-	-
				PRE	-	-	-	-	-	-	-
----	I172460		B-42	ISI	-	-	-	-	-	-	-
BOLT	SIAPSI-3		PUMP BODY BOLTING	AUG	-	-	-	-	-	-	-
2	HPSI			OWN	-	-	-	-	-	-	-
				PRE	-	-	-	-	-	-	-
----	I172520		B-16B	ISI	-	-	-	-	-	-	-
BOLT	SIAPSI-2		INLET FLANGE BOLTS	AUG	-	-	-	-	-	-	-
2	HPSI			OWN	-	-	-	-	-	-	-
				PRE	-	-	-	-	-	-	-
----	I172540		B-40	ISI	-	-	-	-	-	-	-
BOLT	SIAPSI-2		OUTLET FLANGE BOLTS	AUG	-	-	-	-	-	-	-
2	HPSI			OWN	-	-	-	-	-	-	-
				PRE	-	-	-	-	-	-	-
----	I172560		B-40	ISI	-	-	-	-	-	-	-
BOLT	SIAPSI-2		PUMP BODY BOLTING	AUG	-	-	-	-	-	-	-
2	HPSI			OWN	-	-	-	-	-	-	-
				PRE	-	-	-	-	-	-	-
----	I050420		A-25A	ISI	-	-	-	-	-	-	-
C3.20	CVU-60 (IA)		INTEGRAL ATTACHMENT	AUG	-	-	-	-	-	-	-
2	CVCS-CHRG			OWN	-	-	-	-	-	-	-
				PRE	-	-	-	-	-	-	-
----	I050930		A-29	ISI	-	-	-	-	-	-	-
C3.20	CVU-54 (IA)		INTEGRAL ATTACHMENT	AUG	-	-	-	-	-	-	-
2	CVCS-CHRG			OWN	-	-	-	-	-	-	-
				PRE	-	-	-	-	-	-	-
----	I054625		A-27	ISI	-	-	-	-	-	-	-
C3.20	CVU-48 (IA)		INTEGRAL ATTACHMENT	AUG	-	-	-	-	-	-	-
2	CVCS-CHRG			OWN	-	-	-	-	-	-	-
				PRE	-	-	-	-	-	-	-
----	I078200		B-7	ISI	-	-	-	-	-	-	-
C3.20	SUPPORT LEG #1 (IA)		INTEGRAL ATTACHMENT	AUG	-	-	-	-	-	-	-
2	CVCS-CHRG			OWN	-	-	-	-	-	-	-
				PRE	-	-	-	-	-	-	-

Category, ItemNO, Class	Summary / CompID / System	Scope / Method / Procedure	Iso No. Comp. Desc. Code Case		Period 1 00	Period 1 02	Period 2 03	Period 2 05	Period 2 06	Period 3 08	Period 3 09
---	I078300		B-7	ISI	-	-	-	-	-	-	-
C3.20	SUPPORT LEG #2 (IA)		INTEGRAL ATTACHMENT	AUG	-	-	-	-	-	-	-
2	CVCS-CHRG			OWN	-	-	-	-	-	-	-
				PRE	-	-	-	-	-	-	-
---	I078400		B-7	ISI	-	-	-	-	-	-	-
C3.20	SUPPORT LEG #3 (IA)		INTEGRAL ATTACHMENT	AUG	-	-	-	-	-	-	-
2	CVCS-CHRG			OWN	-	-	-	-	-	-	-
				PRE	-	-	-	-	-	-	-
---	I078700		B-7	ISI	-	-	-	-	-	-	-
C3.20	SUPPORT LEG #1 (IA)		INTEGRAL ATTACHMENT	AUG	-	-	-	-	-	-	-
2	CVCS-CHRG			OWN	-	-	-	-	-	-	-
				PRE	-	-	-	-	-	-	-
---	I078800		B-7	ISI	-	-	-	-	-	-	-
C3.20	SUPPORT LEG #2 (IA)		INTEGRAL ATTACHMENT	AUG	-	-	-	-	-	-	-
2	CVCS-CHRG			OWN	-	-	-	-	-	-	-
				PRE	-	-	-	-	-	-	-
---	I078900		B-7	ISI	-	-	-	-	-	-	-
C3.20	SUPPORT LEG #3 (IA)		INTEGRAL ATTACHMENT	AUG	-	-	-	-	-	-	-
2	CVCS-CHRG			OWN	-	-	-	-	-	-	-
				PRE	-	-	-	-	-	-	-
---	I128305		B-21	ISI	-	-	-	-	-	-	-
C3.20	RHU-85 (IA)		INTEGRAL ATTACHMENT	AUG	-	-	-	-	-	-	-
2	RHR			OWN	-	-	-	-	-	-	-
				PRE	-	-	-	-	-	-	-
---	I130055		B-21	ISI	-	-	-	-	-	-	-
C3.20	RHU-93 (IA)		INTEGRAL ATTACHMENT	AUG	-	-	-	-	-	-	-
2	RHR			OWN	-	-	-	-	-	-	-
				PRE	-	-	-	-	-	-	-
---	I173036		B-50	ISI	-	-	-	-	-	-	-
C3.20	PEN 319 ANCHOR (IA)		INTEGRAL ATTACHMENT	AUG	-	-	-	-	-	-	-
2	SW			OWN	-	-	-	-	-	-	-
				PRE	-	-	-	-	-	-	-
---	I173160		B-50	ISI	-	-	-	-	-	-	-
C3.20	SWU-81 (IA)		INTEGRAL ATTACHMENT	AUG	-	-	-	-	-	-	-
2	SW			OWN	-	-	-	-	-	-	-
				PRE	-	-	-	-	-	-	-
---	I173506		B-50A	ISI	-	-	-	-	-	-	-
C3.20	PEN 308 ANCHOR (IA)(TYPE III)		INTEGRAL ATTACHMENT	AUG	-	-	-	-	-	-	-
2	SW			OWN	-	-	-	-	-	-	-
				PRE	-	-	-	-	-	-	-

Category, ItemNO, Class	Summary / CompID / System	Scope / Method / Procedure	Iso No. Comp. Desc. Code Case		Period 1 00	Period 1 02	Period 2 03	Period 2 05	Period 2 06	Period 3 08	Period 3 09
---	I173610		B-51	ISI	-	-	-	-	-	-	-
C3.20	SWU-367 (IA)		INTEGRAL ATTACHMENT	AUG	-	-	-	-	-	-	-
2	SW			OWN	-	-	-	-	-	-	-
				PRE	-	-	-	-	-	-	-
---	I173646		B-51	ISI	-	-	-	-	-	-	-
C3.20	PEN 316 ANCHOR (IA)		INTEGRAL ATTACHMENT	AUG	-	-	-	-	-	-	-
2	SW			OWN	-	-	-	-	-	-	-
				PRE	-	-	-	-	-	-	-
---	I173790		B-51	ISI	-	-	-	-	-	-	-
C3.20	SWU-85 (IA)		INTEGRAL ATTACHMENT	AUG	-	-	-	-	-	-	-
2	SW			OWN	-	-	-	-	-	-	-
				PRE	-	-	-	-	-	-	-
---	I173860		B-51	ISI	-	-	-	-	-	-	-
C3.20	SWU-88 (IA)		INTEGRAL ATTACHMENT	AUG	-	-	-	-	-	-	-
2	SW			OWN	-	-	-	-	-	-	-
				PRE	-	-	-	-	-	-	-
---	I174140		B-51C	ISI	-	-	-	-	-	-	-
C3.20	SWU-64 (IA)		INTEGRAL ATTACHMENT	AUG	-	-	-	-	-	-	-
2	SW			OWN	-	-	-	-	-	-	-
				PRE	-	-	-	-	-	-	-
---	I174296		B-51C	ISI	-	-	-	-	-	-	-
C3.20	PEN 311 ANCHOR (IA)		INTEGRAL ATTACHMENT	AUG	-	-	-	-	-	-	-
2	SW			OWN	-	-	-	-	-	-	-
				PRE	-	-	-	-	-	-	-
---	I174396		B-52	ISI	-	-	-	-	-	-	-
C3.20	PEN 320 ANCHOR (IA)		INTEGRAL ATTACHMENT	AUG	-	-	-	-	-	-	-
2	SW			OWN	-	-	-	-	-	-	-
				PRE	-	-	-	-	-	-	-
---	I174460		B-52	ISI	-	-	-	-	-	-	-
C3.20	SWU-89 (IA)		INTEGRAL ATTACHMENT	AUG	-	-	-	-	-	-	-
2	SW			OWN	-	-	-	-	-	-	-
				PRE	-	-	-	-	-	-	-
---	I174540		B-52	ISI	-	-	-	-	-	-	-
C3.20	SWU-91 (IA)		INTEGRAL ATTACHMENT	AUG	-	-	-	-	-	-	-
2	SW			OWN	-	-	-	-	-	-	-
				PRE	-	-	-	-	-	-	-
---	I174610		B-52	ISI	-	-	-	-	-	-	-
C3.20	SWU-95 (IA)		INTEGRAL ATTACHMENT	AUG	-	-	-	-	-	-	-
2	SW			OWN	-	-	-	-	-	-	-
				PRE	-	-	-	-	-	-	-

Category, ItemNO, Class	Summary / CompID / System	Scope / Method / Procedure	Iso No. Comp. Desc. Code Case		Period 1 00	Period 1 02	Period 2 03	Period 2 05	Period 2 06	Period 3 08	Period 3 09
----	I175060		B-52B	ISI	-	-	-	-	-	-	-
C3.20	SWU-46 (IA)		INTEGRAL ATTACHMENT	AUG	-	-	-	-	-	-	-
2	SW			OWN	-	-	-	-	-	-	-
				PRE	-	-	-	-	-	-	-
----	I175206		B-52B	ISI	-	-	-	-	-	-	-
C3.20	PEN 315 ANCHOR (IA)		INTEGRAL ATTACHMENT	AUG	-	-	-	-	-	-	-
2	SW			OWN	-	-	-	-	-	-	-
				PRE	-	-	-	-	-	-	-
----	I175280		B-53	ISI	-	-	-	-	-	-	-
C3.20	SWU-371 (IA)		INTEGRAL ATTACHMENT	AUG	-	-	-	-	-	-	-
2	SW			OWN	-	-	-	-	-	-	-
				PRE	-	-	-	-	-	-	-
----	I175326		B-53	ISI	-	-	-	-	-	-	-
C3.20	PEN 312 ANCHOR (IA)		INTEGRAL ATTACHMENT	AUG	-	-	-	-	-	-	-
2	SW			OWN	-	-	-	-	-	-	-
				PRE	-	-	-	-	-	-	-
----	I175460		B-53	ISI	-	-	-	-	-	-	-
C3.20	SWU-42 (IA)		INTEGRAL ATTACHMENT	AUG	-	-	-	-	-	-	-
2	SW			OWN	-	-	-	-	-	-	-
				PRE	-	-	-	-	-	-	-
----	I175780		B-53A	ISI	-	-	-	-	-	-	-
C3.20	SWU-19 (IA)		INTEGRAL ATTACHMENT	AUG	-	-	-	-	-	-	-
2	SW			OWN	-	-	-	-	-	-	-
				PRE	-	-	-	-	-	-	-
----	I175886		B-53A	ISI	-	-	-	-	-	-	-
C3.20	PEN 323 ANCHOR (IA)		INTEGRAL ATTACHMENT	AUG	-	-	-	-	-	-	-
2	SW			OWN	-	-	-	-	-	-	-
				PRE	-	-	-	-	-	-	-
----	I176061		C-20	ISI	-	-	-	-	-	-	-
C3.20	AFU-214 (AFW-16) (IA)		INTEGRAL ATTACHMENT	AUG	-	-	-	-	-	-	-
2	SAFW			OWN	-	-	-	-	-	-	-
				PRE	-	-	-	-	-	-	-
----	I176081		C-20	ISI	-	-	-	-	-	-	-
C3.20	AFU-215 (AFW-17) (IA)		INTEGRAL ATTACHMENT	AUG	-	-	-	-	-	-	-
2	SAFW			OWN	-	-	-	-	-	-	-
				PRE	-	-	-	-	-	-	-
----	I176121		C-20	ISI	-	-	-	-	-	-	-
C3.20	AFU-217 (AFW-19) (IA)		INTEGRAL ATTACHMENT	AUG	-	-	-	-	-	-	-
2	SAFW			OWN	-	-	-	-	-	-	-
				PRE	-	-	-	-	-	-	-

Category, ItemNO, Class	Summary / CompID / System	Scope / Method / Procedure	Iso No. Comp. Desc. Code Case		Period 1 00	Period 1 02	Period 2 03	Period 2 05	Period 2 06	Period 3 08	Period 3 09
---	I176141		C-20	ISI	-	-	-	-	-	-	-
C3.20	AFU-218 (AFW-20) (IA)		INTEGRAL ATTACHMENT	AUG	-	-	-	-	-	-	-
2	SAFW			OWN	-	-	-	-	-	-	-
				PRE	-	-	-	-	-	-	-
---	I176161		C-20	ISI	-	-	-	-	-	-	-
C3.20	AFU-219 (AFW-21) (IA)		INTEGRAL ATTACHMENT	AUG	-	-	-	-	-	-	-
2	SAFW			OWN	-	-	-	-	-	-	-
				PRE	-	-	-	-	-	-	-
---	I176221		C-20	ISI	-	-	-	-	-	-	-
C3.20	AFU-222 (AFW-24) (IA)		INTEGRAL ATTACHMENT	AUG	-	-	-	-	-	-	-
2	SAFW			OWN	-	-	-	-	-	-	-
				PRE	-	-	-	-	-	-	-
---	I176261		C-20	ISI	-	-	-	-	-	-	-
C3.20	AFU-224 (AFW-28) (IA)		INTEGRAL ATTACHMENT	AUG	-	-	-	-	-	-	-
2	SAFW			OWN	-	-	-	-	-	-	-
				PRE	-	-	-	-	-	-	-
---	I176321		C-20	ISI	-	-	-	-	-	-	-
C3.20	AFU-227 (AFW-31) (IA)		INTEGRAL ATTACHMENT	AUG	-	-	-	-	-	-	-
2	SAFW			OWN	-	-	-	-	-	-	-
				PRE	-	-	-	-	-	-	-
---	I176441		C-24	ISI	-	-	-	-	-	-	-
C3.20	AFU-200 (AFW-05) (IA)		INTEGRAL ATTACHMENT	AUG	-	-	-	-	-	-	-
2	SAFW			OWN	-	-	-	-	-	-	-
				PRE	-	-	-	-	-	-	-
---	I176481		C-24	ISI	-	-	-	-	-	-	-
C3.20	AFU-202 (AFW-07) (IA)		INTEGRAL ATTACHMENT	AUG	-	-	-	-	-	-	-
2	SAFW			OWN	-	-	-	-	-	-	-
				PRE	-	-	-	-	-	-	-
---	I176501		C-24	ISI	-	-	-	-	-	-	-
C3.20	AFU-203 (AFW-08) (IA)		INTEGRAL ATTACHMENT	AUG	-	-	-	-	-	-	-
2	SAFW			OWN	-	-	-	-	-	-	-
				PRE	-	-	-	-	-	-	-
---	I501400		C-9	ISI	-	-	-	-	-	-	-
C3.20	CCU-17 (IA)		INTEGRAL ATTACHMENT	AUG	-	-	-	-	-	-	-
2	AC			OWN	-	-	-	-	-	-	-
				PRE	-	-	-	-	-	-	-
---	I507201		C-21	ISI	-	-	-	-	-	-	-
C3.20	AFU-231/256 (AFW-51) (IA)		INTEGRAL ATTACHMENT	AUG	-	-	-	-	-	-	-
2	SAFW			OWN	-	-	-	-	-	-	-
				PRE	-	-	-	-	-	-	-

Category, ItemNO, Class	Summary / CompID / System	Scope / Method / Procedure	Iso No. Comp. Desc. Code Case		Period 1 00	Period 1 02	Period 2 03	Period 2 05	Period 2 06	Period 3 08	Period 3 09
----	I173000		B-50	ISI	-	-	-	-	-	-	-
C-F-2*	1		VALVE(4627)-TO-PIPE	AUG	-	-	-	-	-	-	-
2	SW			OWN	-	-	-	-	-	-	-
				PRE	-	-	-	-	-	-	-
----	I173010		B-50	ISI	-	-	-	-	-	-	-
C-F-2*	2		PIPE-TO-REDUCING ELBOW	AUG	-	-	-	-	-	-	-
2	SW			OWN	-	-	-	-	-	-	-
				PRE	-	-	-	-	-	-	-
----	I173020		B-50	ISI	-	-	-	-	-	-	-
C-F-2*	3		REDUCING ELBOW-TO-PIPE	AUG	-	-	-	-	-	-	-
2	SW			OWN	-	-	-	-	-	-	-
				PRE	-	-	-	-	-	-	-
----	I173030		B-50	ISI	-	-	-	-	-	-	-
C-F-2*	4		PIPE-TO-PIPE (PEN 319)	AUG	-	-	-	-	-	-	-
2	SW			OWN	-	-	-	-	-	-	-
				PRE	-	-	-	-	-	-	-
----	I173040		B-50	ISI	-	-	-	-	-	-	-
C-F-2*	5		PIPE-TO-REDUCING ELBOW (PEN 319)	AUG	-	-	-	-	-	-	-
2	SW			OWN	-	-	-	-	-	-	-
				PRE	-	-	-	-	-	-	-
----	I173050		B-50	ISI	-	-	-	-	-	-	-
C-F-2*	6		REDUCING ELBOW-TO-ELBOW	AUG	-	-	-	-	-	-	-
2	SW			OWN	-	-	-	-	-	-	-
				PRE	-	-	-	-	-	-	-
----	I173060		B-50	ISI	-	-	-	-	-	-	-
C-F-2*	7		ELBOW-TO-PIPE	AUG	-	-	-	-	-	-	-
2	SW			OWN	-	-	-	-	-	-	-
				PRE	-	-	-	-	-	-	-
----	I173070		B-50	ISI	-	-	-	-	-	-	-
C-F-2*	8		PIPE-TO-ELBOW	AUG	-	-	-	-	-	-	-
2	SW			OWN	-	-	-	-	-	-	-
				PRE	-	-	-	-	-	-	-
----	I173080		B-50	ISI	-	-	-	-	-	-	-
C-F-2*	9		ELBOW-TO-PIPE	AUG	-	-	-	-	-	-	-
2	SW			OWN	-	-	-	-	-	-	-
				PRE	-	-	-	-	-	-	-
----	I173090		B-50	ISI	-	-	-	-	-	-	-
C-F-2*	10		PIPE-TO-ELBOW	AUG	-	-	-	-	-	-	-
2	SW			OWN	-	-	-	-	-	-	-
				PRE	-	-	-	-	-	-	-

Category, ItemNO, Class	Summary / CompID / System	Scope / Method / Procedure	Iso No. Comp. Desc. Code Case		Period 1 00	Period 1 02	Period 2 03	Period 2 05	Period 2 06	Period 3 08	Period 3 09
----	I173100		B-50	ISI	-	-	-	-	-	-	-
C-F-2*	11		ELBOW-TO-PIPE	AUG	-	-	-	-	-	-	-
2	SW			OWN	-	-	-	-	-	-	-
				PRE	-	-	-	-	-	-	-
----	I173120		B-50	ISI	-	-	-	-	-	-	-
C-F-2*	12		PIPE-TO-ELBOW	AUG	-	-	-	-	-	-	-
2	SW			OWN	-	-	-	-	-	-	-
				PRE	-	-	-	-	-	-	-
----	I173130		B-50	ISI	-	-	-	-	-	-	-
C-F-2*	13		ELBOW-TO-PIPE	AUG	-	-	-	-	-	-	-
2	SW			OWN	-	-	-	-	-	-	-
				PRE	-	-	-	-	-	-	-
----	I173140		B-50	ISI	-	-	-	-	-	-	-
C-F-2*	14		PIPE-TO-ELBOW	AUG	-	-	-	-	-	-	-
2	SW			OWN	-	-	-	-	-	-	-
				PRE	-	-	-	-	-	-	-
----	I173150		B-50	ISI	-	-	-	-	-	-	-
C-F-2*	15		ELBOW-TO-PIPE	AUG	-	-	-	-	-	-	-
2	SW			OWN	-	-	-	-	-	-	-
				PRE	-	-	-	-	-	-	-
----	I173200		B-50	ISI	-	-	-	-	-	-	-
C-F-2*	16		PIPE-TO-ELBOW	AUG	-	-	-	-	-	-	-
2	SW			OWN	-	-	-	-	-	-	-
				PRE	-	-	-	-	-	-	-
----	I173210		B-50	ISI	-	-	-	-	-	-	-
C-F-2*	17		ELBOW-TO-PIPE	AUG	-	-	-	-	-	-	-
2	SW			OWN	-	-	-	-	-	-	-
				PRE	-	-	-	-	-	-	-
----	I173230		B-50	ISI	-	-	-	-	-	-	-
C-F-2*	18		8" BRANCH WELD	AUG	-	-	-	-	-	-	-
2	SW			OWN	-	-	-	-	-	-	-
				PRE	-	-	-	-	-	-	-
----	I173240		B-50	ISI	-	-	-	-	-	-	-
C-F-2*	19		PIPE-TO-REDUCING ELBOW	AUG	-	-	-	-	-	-	-
2	SW			OWN	-	-	-	-	-	-	-
				PRE	-	-	-	-	-	-	-
----	I173250		B-50	ISI	-	-	-	-	-	-	-
C-F-2*	20		PIPE-TO-TEE	AUG	-	-	-	-	-	-	-
2	SW			OWN	-	-	-	-	-	-	-
				PRE	-	-	-	-	-	-	-

Category, ItemNO, Class	Summary / CompID / System	Scope / Method / Procedure	Iso No. Comp. Desc. Code Case		Period 1 00	Period 1 02	Period 2 03	Period 2 05	Period 2 06	Period 3 08	Period 3 09
---	I173260		B-50	ISI	-	-	-	-	-	-	-
C-F-2*	21		TEE-TO-REDUCER	AUG	-	-	-	-	-	-	-
2	SW			OWN	-	-	-	-	-	-	-
				PRE	-	-	-	-	-	-	-
---	I173270		B-50A	ISI	-	-	-	-	-	-	-
C-F-2*	23		REDUCER-TO-TEE	AUG	-	-	-	-	-	-	-
2	SW			OWN	-	-	-	-	-	-	-
				PRE	-	-	-	-	-	-	-
---	I173280		B-50A	ISI	-	-	-	-	-	-	-
C-F-2*	24		TEE-TO-PIPE	AUG	-	-	-	-	-	-	-
2	SW			OWN	-	-	-	-	-	-	-
				PRE	-	-	-	-	-	-	-
---	I173290		B-50A	ISI	-	-	-	-	-	-	-
C-F-2*	25		PIPE-TO-TEE	AUG	-	-	-	-	-	-	-
2	SW			OWN	-	-	-	-	-	-	-
				PRE	-	-	-	-	-	-	-
---	I173300		B-50A	ISI	-	-	-	-	-	-	-
C-F-2*	26		TEE-TO-REDUCER	AUG	-	-	-	-	-	-	-
2	SW			OWN	-	-	-	-	-	-	-
				PRE	-	-	-	-	-	-	-
---	I173310		B-50A	ISI	-	-	-	-	-	-	-
C-F-2*	27		TEE-TO-PIPE	AUG	-	-	-	-	-	-	-
2	SW			OWN	-	-	-	-	-	-	-
				PRE	-	-	-	-	-	-	-
---	I173330		B-50A	ISI	-	-	-	-	-	-	-
C-F-2*	28		PIPE-TO-ELBOW	AUG	-	-	-	-	-	-	-
2	SW			OWN	-	-	-	-	-	-	-
				PRE	-	-	-	-	-	-	-
---	I173340		B-50A	ISI	-	-	-	-	-	-	-
C-F-2*	29		ELBOW-TO-PIPE	AUG	-	-	-	-	-	-	-
2	SW			OWN	-	-	-	-	-	-	-
				PRE	-	-	-	-	-	-	-
---	I173380		B-50A	ISI	-	-	-	-	-	-	-
C-F-2*	30		PIPE-TO-ELBOW	AUG	-	-	-	-	-	-	-
2	SW			OWN	-	-	-	-	-	-	-
				PRE	-	-	-	-	-	-	-
---	I173390		B-50A	ISI	-	-	-	-	-	-	-
C-F-2*	31		ELBOW-TO-PIPE	AUG	-	-	-	-	-	-	-
2	SW			OWN	-	-	-	-	-	-	-
				PRE	-	-	-	-	-	-	-

Category, ItemNO, Class	Summary / CompID / System	Scope / Method / Procedure	Iso No. Comp. Desc. Code Case		Period 1 00	Period 1 02	Period 2 03	Period 2 05	Period 2 06	Period 3 08	Period 3 09
----	I173400		B-50A	ISI	-	-	-	-	-	-	-
C-F-2*	32		PIPE-TO-ELBOW	AUG	-	-	-	-	-	-	-
2	SW			OWN	-	-	-	-	-	-	-
				PRE	-	-	-	-	-	-	-
----	I173410		B-50A	ISI	-	-	-	-	-	-	-
C-F-2*	33		ELBOW-TO-PIPE	AUG	-	-	-	-	-	-	-
2	SW			OWN	-	-	-	-	-	-	-
				PRE	-	-	-	-	-	-	-
----	I173430		B-50A	ISI	-	-	-	-	-	-	-
C-F-2*	34		PIPE-TO-ELBOW	AUG	-	-	-	-	-	-	-
2	SW			OWN	-	-	-	-	-	-	-
				PRE	-	-	-	-	-	-	-
----	I173440		B-50A	ISI	-	-	-	-	-	-	-
C-F-2*	35		ELBOW-TO-PIPE	AUG	-	-	-	-	-	-	-
2	SW			OWN	-	-	-	-	-	-	-
				PRE	-	-	-	-	-	-	-
----	I173460		B-50A	ISI	-	-	-	-	-	-	-
C-F-2*	36		PIPE-TO-ELBOW	AUG	-	-	-	-	-	-	-
2	SW			OWN	-	-	-	-	-	-	-
				PRE	-	-	-	-	-	-	-
----	I173470		B-50A	ISI	-	-	-	-	-	-	-
C-F-2*	37		ELBOW-TO-PIPE	AUG	-	-	-	-	-	-	-
2	SW			OWN	-	-	-	-	-	-	-
				PRE	-	-	-	-	-	-	-
----	I173480		B-50A	ISI	-	-	-	-	-	-	-
C-F-2*	38		PIPE-TO-ELBOW	AUG	-	-	-	-	-	-	-
2	SW			OWN	-	-	-	-	-	-	-
				PRE	-	-	-	-	-	-	-
----	I173490		B-50A	ISI	-	-	-	-	-	-	-
C-F-2*	39		REDUCING ELBOW-TO-PIPE	AUG	-	-	-	-	-	-	-
2	SW			OWN	-	-	-	-	-	-	-
				PRE	-	-	-	-	-	-	-
----	I173500		B-50A	ISI	-	-	-	-	-	-	-
C-F-2*	40		PIPE-TO-PIPE (PEN 308)	AUG	-	-	-	-	-	-	-
2	SW			OWN	-	-	-	-	-	-	-
				PRE	-	-	-	-	-	-	-
----	I173510		B-50A	ISI	-	-	-	-	-	-	-
C-F-2*	41		PIPE-TO-REDUCING TEE (PEN 308)	AUG	-	-	-	-	-	-	-
2	SW			OWN	-	-	-	-	-	-	-
				PRE	-	-	-	-	-	-	-

Category, ItemNO, Class	Summary / CompID / System	Scope / Method / Procedure	Iso No. Comp. Desc. Code Case		Period 1 00	Period 1 02	Period 2 03	Period 2 05	Period 2 06	Period 3 08	Period 3 09
----	I173520		B-50A	ISI	-	-	-	-	-	-	-
C-F-2*	42		TEE-TO-CAP	AUG	-	-	-	-	-	-	-
2	SW			OWN	-	-	-	-	-	-	-
				PRE	-	-	-	-	-	-	-
----	I173530		B-50A	ISI	-	-	-	-	-	-	-
C-F-2*	43		TEE-TO-PIPE	AUG	-	-	-	-	-	-	-
2	SW			OWN	-	-	-	-	-	-	-
				PRE	-	-	-	-	-	-	-
----	I173560		B-50A	ISI	-	-	-	-	-	-	-
C-F-2*	44		PIPE-TO-FLANGE	AUG	-	-	-	-	-	-	-
2	SW			OWN	-	-	-	-	-	-	-
				PRE	-	-	-	-	-	-	-
----	I173570		B-50A	ISI	-	-	-	-	-	-	-
C-F-2*	45		FLANGE-TO-PIPE	AUG	-	-	-	-	-	-	-
2	SW			OWN	-	-	-	-	-	-	-
				PRE	-	-	-	-	-	-	-
----	I173580		B-50A	ISI	-	-	-	-	-	-	-
C-F-2*	46		PIPE-TO-VALVE(4629)	AUG	-	-	-	-	-	-	-
2	SW			OWN	-	-	-	-	-	-	-
				PRE	-	-	-	-	-	-	-
----	I173590		B-51	ISI	-	-	-	-	-	-	-
C-F-2*	1		VALVE(4628)-TO-PIPE	AUG	-	-	-	-	-	-	-
2	SW			OWN	-	-	-	-	-	-	-
				PRE	-	-	-	-	-	-	-
----	I173600		B-51	ISI	-	-	-	-	-	-	-
C-F-2*	2		PIPE-TO-REDUCING ELBOW	AUG	-	-	-	-	-	-	-
2	SW			OWN	-	-	-	-	-	-	-
				PRE	-	-	-	-	-	-	-
----	I173630		B-51	ISI	-	-	-	-	-	-	-
C-F-2*	3		REDUCING ELBOW-TO-PIPE	AUG	-	-	-	-	-	-	-
2	SW			OWN	-	-	-	-	-	-	-
				PRE	-	-	-	-	-	-	-
----	I173640		B-51	ISI	-	-	-	-	-	-	-
C-F-2*	4		PIPE-TO-PIPE (PEN 316)	AUG	-	-	-	-	-	-	-
2	SW			OWN	-	-	-	-	-	-	-
				PRE	-	-	-	-	-	-	-
----	I173650		B-51	ISI	-	-	-	-	-	-	-
C-F-2*	5		PIPE-TO-REDUCING ELBOW (PEN 316)	AUG	-	-	-	-	-	-	-
2	SW			OWN	-	-	-	-	-	-	-
				PRE	-	-	-	-	-	-	-

Category, ItemNO, Class	Summary / CompID / System	Scope / Method / Procedure	Iso No. Comp. Desc. Code Case		Period 1 00	Period 1 02	Period 2 03	Period 2 05	Period 2 06	Period 3 08	Period 3 09
----	I173660		B-51	ISI	-	-	-	-	-	-	-
C-F-2*	6		REDUCING ELBOW-TO-ELBOW	AUG	-	-	-	-	-	-	-
2	SW			OWN	-	-	-	-	-	-	-
				PRE	-	-	-	-	-	-	-
----	I173670		B-51	ISI	-	-	-	-	-	-	-
C-F-2*	7		ELBOW-TO-PIPE	AUG	-	-	-	-	-	-	-
2	SW			OWN	-	-	-	-	-	-	-
				PRE	-	-	-	-	-	-	-
----	I173680		B-51	ISI	-	-	-	-	-	-	-
C-F-2*	8		PIPE-TO-ELBOW	AUG	-	-	-	-	-	-	-
2	SW			OWN	-	-	-	-	-	-	-
				PRE	-	-	-	-	-	-	-
----	I173690		B-51	ISI	-	-	-	-	-	-	-
C-F-2*	9		ELBOW-TO-PIPE	AUG	-	-	-	-	-	-	-
2	SW			OWN	-	-	-	-	-	-	-
				PRE	-	-	-	-	-	-	-
----	I173700		B-51	ISI	-	-	-	-	-	-	-
C-F-2*	10		PIPE-TO-ELBOW	AUG	-	-	-	-	-	-	-
2	SW			OWN	-	-	-	-	-	-	-
				PRE	-	-	-	-	-	-	-
----	I173710		B-51	ISI	-	-	-	-	-	-	-
C-F-2*	11		ELBOW-TO-PIPE	AUG	-	-	-	-	-	-	-
2	SW			OWN	-	-	-	-	-	-	-
				PRE	-	-	-	-	-	-	-
----	I173720		B-51	ISI	-	-	-	-	-	-	-
C-F-2*	12		PIPE-TO-ELBOW	AUG	-	-	-	-	-	-	-
2	SW			OWN	-	-	-	-	-	-	-
				PRE	-	-	-	-	-	-	-
----	I173730		B-51	ISI	-	-	-	-	-	-	-
C-F-2*	13		ELBOW-TO-PIPE	AUG	-	-	-	-	-	-	-
2	SW			OWN	-	-	-	-	-	-	-
				PRE	-	-	-	-	-	-	-
----	I173750		B-51	ISI	-	-	-	-	-	-	-
C-F-2*	14		PIPE-TO-ELBOW	AUG	-	-	-	-	-	-	-
2	SW			OWN	-	-	-	-	-	-	-
				PRE	-	-	-	-	-	-	-
----	I173760		B-51	ISI	-	-	-	-	-	-	-
C-F-2*	15		ELBOW-TO-PIPE	AUG	-	-	-	-	-	-	-
2	SW			OWN	-	-	-	-	-	-	-
				PRE	-	-	-	-	-	-	-

Category, ItemNO, Class	Summary / CompID / System	Scope / Method / Procedure	Iso No. Comp. Desc. Code Case		Period 1 00	Period 1 02	Period 2 03	Period 2 05	Period 2 06	Period 3 08	Period 3 09
—	I173770		B-51	ISI	-	-	-	-	-	-	-
C-F-2*	16		PIPE-TO-ELBOW	AUG	-	-	-	-	-	-	-
2	SW			OWN	-	-	-	-	-	-	-
				PRE	-	-	-	-	-	-	-
—	I173780		B-51	ISI	-	-	-	-	-	-	-
C-F-2*	17		ELBOW-TO-PIPE	AUG	-	-	-	-	-	-	-
2	SW			OWN	-	-	-	-	-	-	-
				PRE	-	-	-	-	-	-	-
—	I173830		B-51	ISI	-	-	-	-	-	-	-
C-F-2*	18		PIPE-TO-ELBOW	AUG	-	-	-	-	-	-	-
2	SW			OWN	-	-	-	-	-	-	-
				PRE	-	-	-	-	-	-	-
—	I173840		B-51	ISI	-	-	-	-	-	-	-
C-F-2*	19		ELBOW-TO-PIPE	AUG	-	-	-	-	-	-	-
2	SW			OWN	-	-	-	-	-	-	-
				PRE	-	-	-	-	-	-	-
—	I173880		B-51	ISI	-	-	-	-	-	-	-
C-F-2*	20		PIPE-TO-ELBOW	AUG	-	-	-	-	-	-	-
2	SW			OWN	-	-	-	-	-	-	-
				PRE	-	-	-	-	-	-	-
—	I173890		B-51	ISI	-	-	-	-	-	-	-
C-F-2*	21		ELBOW-TO-PIPE	AUG	-	-	-	-	-	-	-
2	SW			OWN	-	-	-	-	-	-	-
				PRE	-	-	-	-	-	-	-
—	I173900		B-51A	ISI	-	-	-	-	-	-	-
C-F-2*	22		PIPE-TO-ELBOW	AUG	-	-	-	-	-	-	-
2	SW			OWN	-	-	-	-	-	-	-
				PRE	-	-	-	-	-	-	-
—	I173910		B-51A	ISI	-	-	-	-	-	-	-
C-F-2*	23		ELBOW-TO-PIPE	AUG	-	-	-	-	-	-	-
2	SW			OWN	-	-	-	-	-	-	-
				PRE	-	-	-	-	-	-	-
—	I173920		B-51A	ISI	-	-	-	-	-	-	-
C-F-2*	24		PIPE-TO-ELBOW	AUG	-	-	-	-	-	-	-
2	SW			OWN	-	-	-	-	-	-	-
				PRE	-	-	-	-	-	-	-
—	I173930		B-51A	ISI	-	-	-	-	-	-	-
C-F-2*	25		ELBOW-TO-PIPE	AUG	-	-	-	-	-	-	-
2	SW			OWN	-	-	-	-	-	-	-
				PRE	-	-	-	-	-	-	-

Category, ItemNO, Class	Summary / CompID / System	Scope / Method / Procedure	Iso No. Comp. Desc. Code Case		Period 1 00	Period 1 02	Period 2 03	Period 2 05	Period 2 06	Period 3 08	Period 3 09
----	I173940		B-51A	ISI	-	-	-	-	-	-	-
C-F-2*	26		PIPE-TO-TEE	AUG	-	-	-	-	-	-	-
2	SW			OWN	-	-	-	-	-	-	-
				PRE	-	-	-	-	-	-	-
----	I173950		B-51A	ISI	-	-	-	-	-	-	-
C-F-2*	27		TEE-TO-PIPE	AUG	-	-	-	-	-	-	-
2	SW			OWN	-	-	-	-	-	-	-
				PRE	-	-	-	-	-	-	-
----	I173960		B-51A	ISI	-	-	-	-	-	-	-
C-F-2*	28		PIPE-TO-TEE	AUG	-	-	-	-	-	-	-
2	SW			OWN	-	-	-	-	-	-	-
				PRE	-	-	-	-	-	-	-
----	I173970		B-51A	ISI	-	-	-	-	-	-	-
C-F-2*	29		TEE-TO-REDUCER	AUG	-	-	-	-	-	-	-
2	SW			OWN	-	-	-	-	-	-	-
				PRE	-	-	-	-	-	-	-
----	I173980		B-51B	ISI	-	-	-	-	-	-	-
C-F-2*	30		REDUCER-TO-TEE	AUG	-	-	-	-	-	-	-
2	SW			OWN	-	-	-	-	-	-	-
				PRE	-	-	-	-	-	-	-
----	I173990		B-51B	ISI	-	-	-	-	-	-	-
C-F-2*	31		TEE-TO-TEE	AUG	-	-	-	-	-	-	-
2	SW			OWN	-	-	-	-	-	-	-
				PRE	-	-	-	-	-	-	-
----	I174000		B-51B	ISI	-	-	-	-	-	-	-
C-F-2*	32		TEE-TO-TEE	AUG	-	-	-	-	-	-	-
2	SW			OWN	-	-	-	-	-	-	-
				PRE	-	-	-	-	-	-	-
----	I174010		B-51B	ISI	-	-	-	-	-	-	-
C-F-2*	33		TEE-TO-ELBOW	AUG	-	-	-	-	-	-	-
2	SW			OWN	-	-	-	-	-	-	-
				PRE	-	-	-	-	-	-	-
----	I174020		B-51B	ISI	-	-	-	-	-	-	-
C-F-2*	34		ELBOW-TO-PIPE	AUG	-	-	-	-	-	-	-
2	SW			OWN	-	-	-	-	-	-	-
				PRE	-	-	-	-	-	-	-
----	I174030		B-51B	ISI	-	-	-	-	-	-	-
C-F-2*	35		PIPE-TO-ELBOW	AUG	-	-	-	-	-	-	-
2	SW			OWN	-	-	-	-	-	-	-
				PRE	-	-	-	-	-	-	-

Category, ItemNO, Class	Summary / CompID / System	Scope / Method / Procedure	Iso No. Comp. Desc. Code Case		Period 1 00	Period 1 02	Period 2 03	Period 2 05	Period 2 06	Period 3 08	Period 3 09
----	I174040		B-51B	ISI	-	-	-	-	-	-	-
C-F-2*	36		ELBOW-TO-PIPE	AUG	-	-	-	-	-	-	-
2	SW			OWN	-	-	-	-	-	-	-
				PRE	-	-	-	-	-	-	-
----	I174060		B-51C	ISI	-	-	-	-	-	-	-
C-F-2*	37		PIPE-TO-ELBOW	AUG	-	-	-	-	-	-	-
2	SW			OWN	-	-	-	-	-	-	-
				PRE	-	-	-	-	-	-	-
----	I174070		B-51C	ISI	-	-	-	-	-	-	-
C-F-2*	38		ELBOW-TO-PIPE	AUG	-	-	-	-	-	-	-
2	SW			OWN	-	-	-	-	-	-	-
				PRE	-	-	-	-	-	-	-
----	I174100		B-51C	ISI	-	-	-	-	-	-	-
C-F-2*	39		PIPE-TO-ELBOW	AUG	-	-	-	-	-	-	-
2	SW			OWN	-	-	-	-	-	-	-
				PRE	-	-	-	-	-	-	-
----	I174110		B-51C	ISI	-	-	-	-	-	-	-
C-F-2*	40		ELBOW-TO-PIPE	AUG	-	-	-	-	-	-	-
2	SW			OWN	-	-	-	-	-	-	-
				PRE	-	-	-	-	-	-	-
----	I174160		B-51C	ISI	-	-	-	-	-	-	-
C-F-2*	41		PIPE-TO-ELBOW	AUG	-	-	-	-	-	-	-
2	SW			OWN	-	-	-	-	-	-	-
				PRE	-	-	-	-	-	-	-
----	I174170		B-51C	ISI	-	-	-	-	-	-	-
C-F-2*	42		ELBOW-TO-PIPE	AUG	-	-	-	-	-	-	-
2	SW			OWN	-	-	-	-	-	-	-
				PRE	-	-	-	-	-	-	-
----	I174180		B-51C	ISI	-	-	-	-	-	-	-
C-F-2*	43		PIPE-TO-ELBOW	AUG	-	-	-	-	-	-	-
2	SW			OWN	-	-	-	-	-	-	-
				PRE	-	-	-	-	-	-	-
----	I174190		B-51C	ISI	-	-	-	-	-	-	-
C-F-2*	44		ELBOW-TO-PIPE	AUG	-	-	-	-	-	-	-
2	SW			OWN	-	-	-	-	-	-	-
				PRE	-	-	-	-	-	-	-
----	I174210		B-51C	ISI	-	-	-	-	-	-	-
C-F-2*	45		PIPE-TO-ELBOW	AUG	-	-	-	-	-	-	-
2	SW			OWN	-	-	-	-	-	-	-
				PRE	-	-	-	-	-	-	-

Category, ItemNO, Class	Summary / CompID / System	Scope / Method / Procedure	Iso No. Comp. Desc. Code Case		Period 1 00	Period 1 02	Period 2 03	Period 2 05	Period 2 06	Period 3 08	Period 3 09
----	I174220		B-51C	ISI	-	-	-	-	-	-	-
C-F-2*	46		ELBOW-TO-ELBOW	AUG	-	-	-	-	-	-	-
2	SW			OWN	-	-	-	-	-	-	-
				PRE	-	-	-	-	-	-	-
----	I174230		B-51C	ISI	-	-	-	-	-	-	-
C-F-2*	47		ELBOW-TO-PIPE	AUG	-	-	-	-	-	-	-
2	SW			OWN	-	-	-	-	-	-	-
				PRE	-	-	-	-	-	-	-
----	I174250		B-51C	ISI	-	-	-	-	-	-	-
C-F-2*	48		PIPE-TO-ELBOW	AUG	-	-	-	-	-	-	-
2	SW			OWN	-	-	-	-	-	-	-
				PRE	-	-	-	-	-	-	-
----	I174260		B-51C	ISI	-	-	-	-	-	-	-
C-F-2*	49		ELBOW-TO-PIPE	AUG	-	-	-	-	-	-	-
2	SW			OWN	-	-	-	-	-	-	-
				PRE	-	-	-	-	-	-	-
----	I174270		B-51C	ISI	-	-	-	-	-	-	-
C-F-2*	50		PIPE-TO-REDUCING ELBOW	AUG	-	-	-	-	-	-	-
2	SW			OWN	-	-	-	-	-	-	-
				PRE	-	-	-	-	-	-	-
----	I174280		B-51C	ISI	-	-	-	-	-	-	-
C-F-2*	51		REDUCING ELBOW-TO-PIPE	AUG	-	-	-	-	-	-	-
2	SW			OWN	-	-	-	-	-	-	-
				PRE	-	-	-	-	-	-	-
----	I174290		B-51C	ISI	-	-	-	-	-	-	-
C-F-2*	52		PIPE-TO-PIPE (PEN 311)	AUG	-	-	-	-	-	-	-
2	SW			OWN	-	-	-	-	-	-	-
				PRE	-	-	-	-	-	-	-
----	I174300		B-51C	ISI	-	-	-	-	-	-	-
C-F-2*	53		PIPE-TO-REDUCING TEE (PEN 311)	AUG	-	-	-	-	-	-	-
2	SW			OWN	-	-	-	-	-	-	-
				PRE	-	-	-	-	-	-	-
----	I174310		B-51C	ISI	-	-	-	-	-	-	-
C-F-2*	54		TEE-TO-CAP	AUG	-	-	-	-	-	-	-
2	SW			OWN	-	-	-	-	-	-	-
				PRE	-	-	-	-	-	-	-
----	I174320		B-51C	ISI	-	-	-	-	-	-	-
C-F-2*	55		TEE-TO-PIPE	AUG	-	-	-	-	-	-	-
2	SW			OWN	-	-	-	-	-	-	-
				PRE	-	-	-	-	-	-	-

Category, ItemNO, Class	Summary / CompID / System	Scope / Method / Procedure	Iso No. Comp. Desc. Code Case		Period 1 00	Period 1 02	Period 2 03	Period 2 05	Period 2 06	Period 3 08	Period 3 09
----	I174330		B-51C	ISI	-	-	-	-	-	-	-
C-F-2*	56		PIPE-TO-FLANGE	AUG	-	-	-	-	-	-	-
2	SW			OWN	-	-	-	-	-	-	-
				PRE	-	-	-	-	-	-	-
----	I174340		B-51C	ISI	-	-	-	-	-	-	-
C-F-2*	57		FLANGE-TO-PIPE	AUG	-	-	-	-	-	-	-
2	SW			OWN	-	-	-	-	-	-	-
				PRE	-	-	-	-	-	-	-
----	I174350		B-51C	ISI	-	-	-	-	-	-	-
C-F-2*	58		PIPE-TO-VALVE(4630)	AUG	-	-	-	-	-	-	-
2	SW			OWN	-	-	-	-	-	-	-
				PRE	-	-	-	-	-	-	-
----	I174360		B-52	ISI	-	-	-	-	-	-	-
C-F-2*	1		VALVE(4641)-TO-PIPE	AUG	-	-	-	-	-	-	-
2	SW			OWN	-	-	-	-	-	-	-
				PRE	-	-	-	-	-	-	-
----	I174370		B-52	ISI	-	-	-	-	-	-	-
C-F-2*	2		PIPE-TO-TEE	AUG	-	-	-	-	-	-	-
2	SW			OWN	-	-	-	-	-	-	-
				PRE	-	-	-	-	-	-	-
----	I174380		B-52	ISI	-	-	-	-	-	-	-
C-F-2*	3		TEE-TO-CAP	AUG	-	-	-	-	-	-	-
2	SW			OWN	-	-	-	-	-	-	-
				PRE	-	-	-	-	-	-	-
----	I174390		B-52	ISI	-	-	-	-	-	-	-
C-F-2*	4		TEE-TO-PIPE (PEN 320)	AUG	-	-	-	-	-	-	-
2	SW			OWN	-	-	-	-	-	-	-
				PRE	-	-	-	-	-	-	-
----	I174400		B-52	ISI	-	-	-	-	-	-	-
C-F-2*	5		PIPE-TO-REDUCING ELBOW (PEN 320)	AUG	-	-	-	-	-	-	-
2	SW			OWN	-	-	-	-	-	-	-
				PRE	-	-	-	-	-	-	-
----	I174410		B-52	ISI	-	-	-	-	-	-	-
C-F-2*	6		REDUCING ELBOW-TO-PIPE	AUG	-	-	-	-	-	-	-
2	SW			OWN	-	-	-	-	-	-	-
				PRE	-	-	-	-	-	-	-
----	I174420		B-52	ISI	-	-	-	-	-	-	-
C-F-2*	7		PIPE-TO-ELBOW	AUG	-	-	-	-	-	-	-
2	SW			OWN	-	-	-	-	-	-	-
				PRE	-	-	-	-	-	-	-

Category, ItemNO, Class	Summary / CompID / System	Scope / Method / Procedure	Iso No. Comp. Desc. Code Case		Period 1 00	Period 1 02	Period 2 03	Period 2 05	Period 2 06	Period 3 08	Period 3 09
----	I174430		B-52	ISI	-	-	-	-	-	-	-
C-F-2*	8		ELBOW-TO-PIPE	AUG	-	-	-	-	-	-	-
2	SW			OWN	-	-	-	-	-	-	-
				PRE	-	-	-	-	-	-	-
----	I174440		B-52	ISI	-	-	-	-	-	-	-
C-F-2*	9		PIPE-TO-ELBOW	AUG	-	-	-	-	-	-	-
2	SW			OWN	-	-	-	-	-	-	-
				PRE	-	-	-	-	-	-	-
----	I174450		B-52	ISI	-	-	-	-	-	-	-
C-F-2*	10		ELBOW-TO-PIPE	AUG	-	-	-	-	-	-	-
2	SW			OWN	-	-	-	-	-	-	-
				PRE	-	-	-	-	-	-	-
----	I174480		B-52	ISI	-	-	-	-	-	-	-
C-F-2*	10A		PIPE-TO-ELBOW	AUG	-	-	-	-	-	-	-
2	SW			OWN	-	-	-	-	-	-	-
				PRE	-	-	-	-	-	-	-
----	I174490		B-52	ISI	-	-	-	-	-	-	-
C-F-2*	11		ELBOW-TO-PIPE	AUG	-	-	-	-	-	-	-
2	SW			OWN	-	-	-	-	-	-	-
				PRE	-	-	-	-	-	-	-
----	I174510		B-52	ISI	-	-	-	-	-	-	-
C-F-2*	12		PIPE-TO-ELBOW	AUG	-	-	-	-	-	-	-
2	SW			OWN	-	-	-	-	-	-	-
				PRE	-	-	-	-	-	-	-
----	I174520		B-52	ISI	-	-	-	-	-	-	-
C-F-2*	13		ELBOW-TO-ELBOW	AUG	-	-	-	-	-	-	-
2	SW			OWN	-	-	-	-	-	-	-
				PRE	-	-	-	-	-	-	-
----	I174530		B-52	ISI	-	-	-	-	-	-	-
C-F-2*	14		ELBOW-TO-PIPE	AUG	-	-	-	-	-	-	-
2	SW			OWN	-	-	-	-	-	-	-
				PRE	-	-	-	-	-	-	-
----	I174580		B-52	ISI	-	-	-	-	-	-	-
C-F-2*	15		PIPE-TO-ELBOW	AUG	-	-	-	-	-	-	-
2	SW			OWN	-	-	-	-	-	-	-
				PRE	-	-	-	-	-	-	-
----	I174590		B-52	ISI	-	-	-	-	-	-	-
C-F-2*	16		ELBOW-TO-PIPE	AUG	-	-	-	-	-	-	-
2	SW			OWN	-	-	-	-	-	-	-
				PRE	-	-	-	-	-	-	-

Category, ItemNO, Class	Summary / CompID / System	Scope / Method / Procedure	Iso No. Comp. Desc. Code Case		Period 1 00	Period 1 02	Period 2 03	Period 2 05	Period 2 06	Period 3 08	Period 3 09
----	I174630		B-52	ISI	-	-	-	-	-	-	-
C-F-2*	17		PIPE-TO-ELBOW	AUG	-	-	-	-	-	-	-
2	SW			OWN	-	-	-	-	-	-	-
				PRE	-	-	-	-	-	-	-
----	I174640		B-52	ISI	-	-	-	-	-	-	-
C-F-2*	18		ELBOW-TO-PIPE	AUG	-	-	-	-	-	-	-
2	SW			OWN	-	-	-	-	-	-	-
				PRE	-	-	-	-	-	-	-
----	I174670		B-52	ISI	-	-	-	-	-	-	-
C-F-2*	19		PIPE-TO-ELBOW	AUG	-	-	-	-	-	-	-
2	SW			OWN	-	-	-	-	-	-	-
				PRE	-	-	-	-	-	-	-
----	I174680		B-52	ISI	-	-	-	-	-	-	-
C-F-2*	20		ELBOW-TO-PIPE	AUG	-	-	-	-	-	-	-
2	SW			OWN	-	-	-	-	-	-	-
				PRE	-	-	-	-	-	-	-
----	I174750		B-52	ISI	-	-	-	-	-	-	-
C-F-2*	21		PIPE-TO-ELBOW	AUG	-	-	-	-	-	-	-
2	SW			OWN	-	-	-	-	-	-	-
				PRE	-	-	-	-	-	-	-
----	I174760		B-52A	ISI	-	-	-	-	-	-	-
C-F-2*	22		ELBOW-TO-PIPE	AUG	-	-	-	-	-	-	-
2	SW			OWN	-	-	-	-	-	-	-
				PRE	-	-	-	-	-	-	-
----	I174780		B-52A	ISI	-	-	-	-	-	-	-
C-F-2*	23		PIPE-TO-TEE	AUG	-	-	-	-	-	-	-
2	SW			OWN	-	-	-	-	-	-	-
				PRE	-	-	-	-	-	-	-
----	I174790		B-52A	ISI	-	-	-	-	-	-	-
C-F-2*	24		TEE-TO-PIPE	AUG	-	-	-	-	-	-	-
2	SW			OWN	-	-	-	-	-	-	-
				PRE	-	-	-	-	-	-	-
----	I174800		B-52A	ISI	-	-	-	-	-	-	-
C-F-2*	25		PIPE-TO-TEE	AUG	-	-	-	-	-	-	-
2	SW			OWN	-	-	-	-	-	-	-
				PRE	-	-	-	-	-	-	-
----	I174810		B-52A	ISI	-	-	-	-	-	-	-
C-F-2*	26		TEE-TO-REDUCER	AUG	-	-	-	-	-	-	-
2	SW			OWN	-	-	-	-	-	-	-
				PRE	-	-	-	-	-	-	-

Category, ItemNO, Class	Summary / CompID / System	Scope / Method / Procedure	Iso No. Comp. Desc. Code Case		Period 1 00	Period 1 02	Period 2 03	Period 2 05	Period 2 06	Period 3 08	Period 3 09
----	I174820		B-52B	ISI	-	-	-	-	-	-	-
C-F-2*	27		REDUCER-TO-TEE	AUG	-	-	-	-	-	-	-
2	SW			OWN	-	-	-	-	-	-	-
				PRE	-	-	-	-	-	-	-
----	I174840		B-52B	ISI	-	-	-	-	-	-	-
C-F-2*	29		TEE-TO-REDUCER	AUG	-	-	-	-	-	-	-
2	SW			OWN	-	-	-	-	-	-	-
				PRE	-	-	-	-	-	-	-
----	I174850		B-52B	ISI	-	-	-	-	-	-	-
C-F-2*	30		TEE-TO-ELBOW	AUG	-	-	-	-	-	-	-
2	SW			OWN	-	-	-	-	-	-	-
				PRE	-	-	-	-	-	-	-
----	I174860		B-52B	ISI	-	-	-	-	-	-	-
C-F-2*	31		ELBOW-TO-PIPE	AUG	-	-	-	-	-	-	-
2	SW			OWN	-	-	-	-	-	-	-
				PRE	-	-	-	-	-	-	-
----	I174880		B-52B	ISI	-	-	-	-	-	-	-
C-F-2*	32		PIPE-TO-ELBOW	AUG	-	-	-	-	-	-	-
2	SW			OWN	-	-	-	-	-	-	-
				PRE	-	-	-	-	-	-	-
----	I174890		B-52B	ISI	-	-	-	-	-	-	-
C-F-2*	33		ELBOW-TO-ELBOW	AUG	-	-	-	-	-	-	-
2	SW			OWN	-	-	-	-	-	-	-
				PRE	-	-	-	-	-	-	-
----	I174900		B-52B	ISI	-	-	-	-	-	-	-
C-F-2*	34		ELBOW-TO-PIPE	AUG	-	-	-	-	-	-	-
2	SW			OWN	-	-	-	-	-	-	-
				PRE	-	-	-	-	-	-	-
----	I174950		B-52B	ISI	-	-	-	-	-	-	-
C-F-2*	35		PIPE-TO-ELBOW	AUG	-	-	-	-	-	-	-
2	SW			OWN	-	-	-	-	-	-	-
				PRE	-	-	-	-	-	-	-
----	I174960		B-52B	ISI	-	-	-	-	-	-	-
C-F-2*	36		ELBOW-TO-PIPE	AUG	-	-	-	-	-	-	-
2	SW			OWN	-	-	-	-	-	-	-
				PRE	-	-	-	-	-	-	-
----	I174990		B-52B	ISI	-	-	-	-	-	-	-
C-F-2*	37		PIPE-TO-ELBOW	AUG	-	-	-	-	-	-	-
2	SW			OWN	-	-	-	-	-	-	-
				PRE	-	-	-	-	-	-	-

Category, ItemNO, Class	Summary / CompID / System	Scope / Method / Procedure	Iso No. Comp. Desc. Code Case		Period 1 00	Period 1 02	Period 2 03	Period 2 05	Period 2 06	Period 3 08	Period 3 09
----	I175000		B-52B	ISI	-	-	-	-	-	-	-
C-F-2*	38		ELBOW-TO-PIPE	AUG	-	-	-	-	-	-	-
2	SW			OWN	-	-	-	-	-	-	-
				PRE	-	-	-	-	-	-	-
----	I175020		B-52B	ISI	-	-	-	-	-	-	-
C-F-2*	39		PIPE-TO-ELBOW	AUG	-	-	-	-	-	-	-
2	SW			OWN	-	-	-	-	-	-	-
				PRE	-	-	-	-	-	-	-
----	I175030		B-52B	ISI	-	-	-	-	-	-	-
C-F-2*	40		ELBOW-TO-PIPE	AUG	-	-	-	-	-	-	-
2	SW			OWN	-	-	-	-	-	-	-
				PRE	-	-	-	-	-	-	-
----	I175080		B-52B	ISI	-	-	-	-	-	-	-
C-F-2*	41		PIPE-TO-ELBOW	AUG	-	-	-	-	-	-	-
2	SW			OWN	-	-	-	-	-	-	-
				PRE	-	-	-	-	-	-	-
----	I175090		B-52B	ISI	-	-	-	-	-	-	-
C-F-2*	42		ELBOW-TO-ELBOW	AUG	-	-	-	-	-	-	-
2	SW			OWN	-	-	-	-	-	-	-
				PRE	-	-	-	-	-	-	-
----	I175100		B-52B	ISI	-	-	-	-	-	-	-
C-F-2*	43		ELBOW-TO-PIPE	AUG	-	-	-	-	-	-	-
2	SW			OWN	-	-	-	-	-	-	-
				PRE	-	-	-	-	-	-	-
----	I175120		B-52B	ISI	-	-	-	-	-	-	-
C-F-2*	44		PIPE-TO-ELBOW	AUG	-	-	-	-	-	-	-
2	SW			OWN	-	-	-	-	-	-	-
				PRE	-	-	-	-	-	-	-
----	I175130		B-52B	ISI	-	-	-	-	-	-	-
C-F-2*	45		ELBOW-TO-PIPE	AUG	-	-	-	-	-	-	-
2	SW			OWN	-	-	-	-	-	-	-
				PRE	-	-	-	-	-	-	-
----	I175140		B-52B	ISI	-	-	-	-	-	-	-
C-F-2*	46		PIPE-TO-ELBOW	AUG	-	-	-	-	-	-	-
2	SW			OWN	-	-	-	-	-	-	-
				PRE	-	-	-	-	-	-	-
----	I175150		B-52B	ISI	-	-	-	-	-	-	-
C-F-2*	47		ELBOW-TO-PIPE	AUG	-	-	-	-	-	-	-
2	SW			OWN	-	-	-	-	-	-	-
				PRE	-	-	-	-	-	-	-

Category, ItemNO, Class	Summary / CompID / System	Scope / Method / Procedure	Iso No. Comp. Desc. Code Case		Period 1 00	Period 1 02	Period 2 03	Period 2 05	Period 2 06	Period 3 08	Period 3 09
----	I175170		B-52B	ISI	-	-	-	-	-	-	-
C-F-2*	48		PIPE-TO-ELBOW	AUG	-	-	-	-	-	-	-
2	SW			OWN	-	-	-	-	-	-	-
				PRE	-	-	-	-	-	-	-
----	I175180		B-52B	ISI	-	-	-	-	-	-	-
C-F-2*	49		ELBOW-TO-PIPE	AUG	-	-	-	-	-	-	-
2	SW			OWN	-	-	-	-	-	-	-
				PRE	-	-	-	-	-	-	-
----	I175190		B-52B	ISI	-	-	-	-	-	-	-
C-F-2*	50		PIPE-TO-REDUCING ELBOW	AUG	-	-	-	-	-	-	-
2	SW			OWN	-	-	-	-	-	-	-
				PRE	-	-	-	-	-	-	-
----	I175200		B-52B	ISI	-	-	-	-	-	-	-
C-F-2*	51		REDUCING ELBOW-TO-PIPE (PEN 315)	AUG	-	-	-	-	-	-	-
2	SW			OWN	-	-	-	-	-	-	-
				PRE	-	-	-	-	-	-	-
----	I175210		B-52B	ISI	-	-	-	-	-	-	-
C-F-2*	52		PIPE-TO-REDUCING TEE (PEN 315)	AUG	-	-	-	-	-	-	-
2	SW			OWN	-	-	-	-	-	-	-
				PRE	-	-	-	-	-	-	-
----	I175220		B-52B	ISI	-	-	-	-	-	-	-
C-F-2*	53		TEE-TO-CAP	AUG	-	-	-	-	-	-	-
2	SW			OWN	-	-	-	-	-	-	-
				PRE	-	-	-	-	-	-	-
----	I175230		B-52B	ISI	-	-	-	-	-	-	-
C-F-2*	54		TEE-TO-PIPE	AUG	-	-	-	-	-	-	-
2	SW			OWN	-	-	-	-	-	-	-
				PRE	-	-	-	-	-	-	-
----	I175240		B-52B	ISI	-	-	-	-	-	-	-
C-F-2*	55		PIPE-TO-FLANGE	AUG	-	-	-	-	-	-	-
2	SW			OWN	-	-	-	-	-	-	-
				PRE	-	-	-	-	-	-	-
----	I175250		B-52B	ISI	-	-	-	-	-	-	-
C-F-2*	56		FLANGE-TO-PIPE	AUG	-	-	-	-	-	-	-
2	SW			OWN	-	-	-	-	-	-	-
				PRE	-	-	-	-	-	-	-
----	I175260		B-52B	ISI	-	-	-	-	-	-	-
C-F-2*	57		PIPE-TO-VALVE(4643)	AUG	-	-	-	-	-	-	-
2	SW			OWN	-	-	-	-	-	-	-
				PRE	-	-	-	-	-	-	-

Category, ItemNO, Class	Summary / CompID / System	Scope / Method / Procedure	Iso No. Comp. Desc. Code Case		Period 1 00	Period 1 02	Period 2 03	Period 2 05	Period 2 06	Period 3 08	Period 3 09
----	I175270		B-53	ISI	-	-	-	-	-	-	-
C-F-2*	1		VALVE(4642)-TO-PIPE	AUG	-	-	-	-	-	-	-
2	SW			OWN	-	-	-	-	-	-	-
				PRE	-	-	-	-	-	-	-
----	I175300		B-53	ISI	-	-	-	-	-	-	-
C-F-2*	2		PIPE-TO-REDUCING ELBOW	AUG	-	-	-	-	-	-	-
2	SW			OWN	-	-	-	-	-	-	-
				PRE	-	-	-	-	-	-	-
----	I175310		B-53	ISI	-	-	-	-	-	-	-
C-F-2*	3		REDUCING ELBOW-TO-PIPE	AUG	-	-	-	-	-	-	-
2	SW			OWN	-	-	-	-	-	-	-
				PRE	-	-	-	-	-	-	-
----	I175320		B-53	ISI	-	-	-	-	-	-	-
C-F-2*	4		PIPE-TO-PIPE (PEN 312)	AUG	-	-	-	-	-	-	-
2	SW			OWN	-	-	-	-	-	-	-
				PRE	-	-	-	-	-	-	-
----	I175330		B-53	ISI	-	-	-	-	-	-	-
C-F-2*	5		PIPE-TO-REDUCING ELBOW (PEN 312)	AUG	-	-	-	-	-	-	-
2	SW			OWN	-	-	-	-	-	-	-
				PRE	-	-	-	-	-	-	-
----	I175340		B-53	ISI	-	-	-	-	-	-	-
C-F-2*	6		REDUCING ELBOW-TO-ELBOW	AUG	-	-	-	-	-	-	-
2	SW			OWN	-	-	-	-	-	-	-
				PRE	-	-	-	-	-	-	-
----	I175350		B-53	ISI	-	-	-	-	-	-	-
C-F-2*	7		ELBOW-TO-PIPE	AUG	-	-	-	-	-	-	-
2	SW			OWN	-	-	-	-	-	-	-
				PRE	-	-	-	-	-	-	-
----	I175360		B-53	ISI	-	-	-	-	-	-	-
C-F-2*	8		PIPE-TO-ELBOW	AUG	-	-	-	-	-	-	-
2	SW			OWN	-	-	-	-	-	-	-
				PRE	-	-	-	-	-	-	-
----	I175370		B-53	ISI	-	-	-	-	-	-	-
C-F-2*	9		ELBOW-TO-PIPE	AUG	-	-	-	-	-	-	-
2	SW			OWN	-	-	-	-	-	-	-
				PRE	-	-	-	-	-	-	-
----	I175380		B-53	ISI	-	-	-	-	-	-	-
C-F-2*	10		PIPE-TO-ELBOW	AUG	-	-	-	-	-	-	-
2	SW			OWN	-	-	-	-	-	-	-
				PRE	-	-	-	-	-	-	-

Category, ItemNO, Class	Summary / CompID / System	Scope / Method / Procedure	Iso No. Comp. Desc. Code Case		Period 1 00	Period 1 02	Period 2 03	Period 2 05	Period 2 06	Period 3 08	Period 3 09
---	I175390		B-53	ISI	-	-	-	-	-	-	-
C-F-2*	11		ELBOW-TO-PIPE	AUG	-	-	-	-	-	-	-
2	SW			OWN	-	-	-	-	-	-	-
				PRE	-	-	-	-	-	-	-
---	I175440		B-53	ISI	-	-	-	-	-	-	-
C-F-2*	11A		PIPE-TO-PIPE	AUG	-	-	-	-	-	-	-
2	SW			OWN	-	-	-	-	-	-	-
				PRE	-	-	-	-	-	-	-
---	I175490		B-53	ISI	-	-	-	-	-	-	-
C-F-2*	12		PIPE-TO-ELBOW	AUG	-	-	-	-	-	-	-
2	SW			OWN	-	-	-	-	-	-	-
				PRE	-	-	-	-	-	-	-
---	I175500		B-53	ISI	-	-	-	-	-	-	-
C-F-2*	13		ELBOW-TO-ELBOW	AUG	-	-	-	-	-	-	-
2	SW			OWN	-	-	-	-	-	-	-
				PRE	-	-	-	-	-	-	-
---	I175510		B-53	ISI	-	-	-	-	-	-	-
C-F-2*	14		ELBOW-TO-PIPE	AUG	-	-	-	-	-	-	-
2	SW			OWN	-	-	-	-	-	-	-
				PRE	-	-	-	-	-	-	-
---	I175520		B-53	ISI	-	-	-	-	-	-	-
C-F-2*	15		PIPE-TO-TEE	AUG	-	-	-	-	-	-	-
2	SW			OWN	-	-	-	-	-	-	-
				PRE	-	-	-	-	-	-	-
---	I175530		B-53	ISI	-	-	-	-	-	-	-
C-F-2*	16		TEE-TO-PIPE	AUG	-	-	-	-	-	-	-
2	SW			OWN	-	-	-	-	-	-	-
				PRE	-	-	-	-	-	-	-
---	I175540		B-53	ISI	-	-	-	-	-	-	-
C-F-2*	17		PIPE-TO-TEE	AUG	-	-	-	-	-	-	-
2	SW			OWN	-	-	-	-	-	-	-
				PRE	-	-	-	-	-	-	-
---	I175550		B-53	ISI	-	-	-	-	-	-	-
C-F-2*	18		TEE-TO-REDUCER	AUG	-	-	-	-	-	-	-
2	SW			OWN	-	-	-	-	-	-	-
				PRE	-	-	-	-	-	-	-
---	I175560		B-53A	ISI	-	-	-	-	-	-	-
C-F-2*	20		REDUCER-TO-TEE	AUG	-	-	-	-	-	-	-
2	SW			OWN	-	-	-	-	-	-	-
				PRE	-	-	-	-	-	-	-

Category, ItemNO, Class	Summary / CompID / System	Scope / Method / Procedure	Iso No. Comp. Desc. Code Case		Period 1 00	Period 1 02	Period 2 03	Period 2 05	Period 2 06	Period 3 08	Period 3 09
----	I175570		B-53A	ISI	-	-	-	-	-	-	-
C-F-2*	21		TEE-TO-PIPE	AUG	-	-	-	-	-	-	-
2	SW			OWN	-	-	-	-	-	-	-
				PRE	-	-	-	-	-	-	-
----	I175580		B-53A	ISI	-	-	-	-	-	-	-
C-F-2*	22		PIPE-TO-TEE	AUG	-	-	-	-	-	-	-
2	SW			OWN	-	-	-	-	-	-	-
				PRE	-	-	-	-	-	-	-
----	I175590		B-53A	ISI	-	-	-	-	-	-	-
C-F-2*	23		TEE-TO-REDUCER	AUG	-	-	-	-	-	-	-
2	SW			OWN	-	-	-	-	-	-	-
				PRE	-	-	-	-	-	-	-
----	I175600		B-53A	ISI	-	-	-	-	-	-	-
C-F-2*	24		TEE-TO-PIPE	AUG	-	-	-	-	-	-	-
2	SW			OWN	-	-	-	-	-	-	-
				PRE	-	-	-	-	-	-	-
----	I175620		B-53A	ISI	-	-	-	-	-	-	-
C-F-2*	25		PIPE-TO-ELBOW	AUG	-	-	-	-	-	-	-
2	SW			OWN	-	-	-	-	-	-	-
				PRE	-	-	-	-	-	-	-
----	I175630		B-53A	ISI	-	-	-	-	-	-	-
C-F-2*	26		ELBOW-TO-PIPE	AUG	-	-	-	-	-	-	-
2	SW			OWN	-	-	-	-	-	-	-
				PRE	-	-	-	-	-	-	-
----	I175650		B-53A	ISI	-	-	-	-	-	-	-
C-F-2*	27		PIPE-TO-ELBOW	AUG	-	-	-	-	-	-	-
2	SW			OWN	-	-	-	-	-	-	-
				PRE	-	-	-	-	-	-	-
----	I175660		B-53A	ISI	-	-	-	-	-	-	-
C-F-2*	28		ELBOW-TO-PIPE	AUG	-	-	-	-	-	-	-
2	SW			OWN	-	-	-	-	-	-	-
				PRE	-	-	-	-	-	-	-
----	I175700		B-53A	ISI	-	-	-	-	-	-	-
C-F-2*	28B		PIPE-TO-PIPE	AUG	-	-	-	-	-	-	-
2	SW			OWN	-	-	-	-	-	-	-
				PRE	-	-	-	-	-	-	-
----	I175730		B-53A	ISI	-	-	-	-	-	-	-
C-F-2*	29		PIPE-TO-ELBOW	AUG	-	-	-	-	-	-	-
2	SW			OWN	-	-	-	-	-	-	-
				PRE	-	-	-	-	-	-	-

Category, ItemNO, Class	Summary / CompID / System	Scope / Method / Procedure	Iso No. Comp. Desc. Code Case		Period 1 00	Period 1 02	Period 2 03	Period 2 05	Period 2 06	Period 3 08	Period 3 09
----	I175740		B-53A	ISI	-	-	-	-	-	-	-
C-F-2*	30		ELBOW-TO-PIPE	AUG	-	-	-	-	-	-	-
2	SW			OWN	-	-	-	-	-	-	-
				PRE	-	-	-	-	-	-	-
----	I175750		B-53A	ISI	-	-	-	-	-	-	-
C-F-2*	30A		PIPE-TO-ELBOW	AUG	-	-	-	-	-	-	-
2	SW			OWN	-	-	-	-	-	-	-
				PRE	-	-	-	-	-	-	-
----	I175760		B-53A	ISI	-	-	-	-	-	-	-
C-F-2*	31		ELBOW-TO-PIPE	AUG	-	-	-	-	-	-	-
2	SW			OWN	-	-	-	-	-	-	-
				PRE	-	-	-	-	-	-	-
----	I175800		B-53A	ISI	-	-	-	-	-	-	-
C-F-2*	32		PIPE-TO-ELBOW	AUG	-	-	-	-	-	-	-
2	SW			OWN	-	-	-	-	-	-	-
				PRE	-	-	-	-	-	-	-
----	I175810		B-53A	ISI	-	-	-	-	-	-	-
C-F-2*	33		ELBOW-TO-PIPE	AUG	-	-	-	-	-	-	-
2	SW			OWN	-	-	-	-	-	-	-
				PRE	-	-	-	-	-	-	-
----	I175830		B-53A	ISI	-	-	-	-	-	-	-
C-F-2*	34		PIPE-TO-ELBOW	AUG	-	-	-	-	-	-	-
2	SW			OWN	-	-	-	-	-	-	-
				PRE	-	-	-	-	-	-	-
----	I175840		B-53A	ISI	-	-	-	-	-	-	-
C-F-2*	35		ELBOW-TO-ELBOW	AUG	-	-	-	-	-	-	-
2	SW			OWN	-	-	-	-	-	-	-
				PRE	-	-	-	-	-	-	-
----	I175850		B-53A	ISI	-	-	-	-	-	-	-
C-F-2*	36		ELBOW-TO-PIPE	AUG	-	-	-	-	-	-	-
2	SW			OWN	-	-	-	-	-	-	-
				PRE	-	-	-	-	-	-	-
----	I175860		B-53A	ISI	-	-	-	-	-	-	-
C-F-2*	37		PIPE-TO-ELBOW	AUG	-	-	-	-	-	-	-
2	SW			OWN	-	-	-	-	-	-	-
				PRE	-	-	-	-	-	-	-
----	I175870		B-53A	ISI	-	-	-	-	-	-	-
C-F-2*	38		ELBOW-TO-REDUCING ELBOW	AUG	-	-	-	-	-	-	-
2	SW			OWN	-	-	-	-	-	-	-
				PRE	-	-	-	-	-	-	-

Category, ItemNO, Class	Summary / CompID / System	Scope / Method / Procedure	Iso No. Comp. Desc. Code Case		Period 1 00	Period 1 02	Period 2 03	Period 2 05	Period 2 06	Period 3 08	Period 3 09
----	I175880		B-53A	ISI	-	-	-	-	-	-	-
C-F-2*	39		REDUCING ELBOW-TO-PIPE (PEN 323)	AUG	-	-	-	-	-	-	-
2	SW			OWN	-	-	-	-	-	-	-
				PRE	-	-	-	-	-	-	-
----	I175890		B-53A	ISI	-	-	-	-	-	-	-
C-F-2*	40		PIPE-TO-REDUCING TEE (PEN 323)	AUG	-	-	-	-	-	-	-
2	SW			OWN	-	-	-	-	-	-	-
				PRE	-	-	-	-	-	-	-
----	I175900		B-53A	ISI	-	-	-	-	-	-	-
C-F-2*	41		TEE-TO-CAP	AUG	-	-	-	-	-	-	-
2	SW			OWN	-	-	-	-	-	-	-
				PRE	-	-	-	-	-	-	-
----	I175910		B-53A	ISI	-	-	-	-	-	-	-
C-F-2*	42		TEE-TO-PIPE	AUG	-	-	-	-	-	-	-
2	SW			OWN	-	-	-	-	-	-	-
				PRE	-	-	-	-	-	-	-
----	I175920		B-53A	ISI	-	-	-	-	-	-	-
C-F-2*	43		PIPE-TO-FLANGE	AUG	-	-	-	-	-	-	-
2	SW			OWN	-	-	-	-	-	-	-
				PRE	-	-	-	-	-	-	-
----	I175930		B-53A	ISI	-	-	-	-	-	-	-
C-F-2*	44		FLANGE-TO-PIPE	AUG	-	-	-	-	-	-	-
2	SW			OWN	-	-	-	-	-	-	-
				PRE	-	-	-	-	-	-	-
----	I175950		B-53A	ISI	-	-	-	-	-	-	-
C-F-2*	45		PIPE-TO-VALVE(4644)	AUG	-	-	-	-	-	-	-
2	SW			OWN	-	-	-	-	-	-	-
				PRE	-	-	-	-	-	-	-
----	I073200		B-4	ISI	-	-	-	-	-	-	-
D1.20	S1		SUPPORT LEG #1 - IA	AUG	-	-	-	-	-	-	-
3	CVCS-CHRG			OWN	-	-	-	-	-	-	-
				PRE	-	-	-	-	-	-	-
----	I073300		B-4	ISI	-	-	-	-	-	-	-
D1.20	S2		SUPPORT LEG #2 - IA	AUG	-	-	-	-	-	-	-
3	CVCS-CHRG			OWN	-	-	-	-	-	-	-
				PRE	-	-	-	-	-	-	-
----	I073400		B-4	ISI	-	-	-	-	-	-	-
D1.20	S3		SUPPORT LEG #3 - IA	AUG	-	-	-	-	-	-	-
3	CVCS-CHRG			OWN	-	-	-	-	-	-	-
				PRE	-	-	-	-	-	-	-

Category, ItemNO, Class	Summary / CompID / System	Scope / Method / Procedure	Iso No. Comp. Desc. Code Case		Period 1 00	Period 1 02	Period 2 03	Period 2 05	Period 2 06	Period 3 08	Period 3 09
---	I501670		C-11	ISI	-	-	-	-	-	-	-
D1.20	SWU-175 (IA)		INTEGRAL ATTACHMENT	AUG	-	-	-	-	-	-	-
3	SW			OWN	-	-	-	-	-	-	-
				PRE	-	-	-	-	-	-	-
---	I501680		C-11	ISI	-	-	-	-	-	-	-
D1.20	SWU-176 (IA)		INTEGRAL ATTACHMENT	AUG	-	-	-	-	-	-	-
3	SW			OWN	-	-	-	-	-	-	-
				PRE	-	-	-	-	-	-	-
---	I501780		C-11	ISI	-	-	-	-	-	-	-
D1.20	SWU-186 (IA)		INTEGRAL ATTACHMENT	AUG	-	-	-	-	-	-	-
3	SW			OWN	-	-	-	-	-	-	-
				PRE	-	-	-	-	-	-	-
---	I501800		C-11	ISI	-	-	-	-	-	-	-
D1.20	SWU-188 (IA)		INTEGRAL ATTACHMENT	AUG	-	-	-	-	-	-	-
3	SW			OWN	-	-	-	-	-	-	-
				PRE	-	-	-	-	-	-	-
---	I502130		C-12	ISI	-	-	-	-	-	-	-
D1.20	SWU-120 (IA)		INTEGRAL ATTACHMENT	AUG	-	-	-	-	-	-	-
3	SW			OWN	-	-	-	-	-	-	-
				PRE	-	-	-	-	-	-	-
---	I050827		A-30	ISI	-	-	-	-	-	-	-
F1.20A	CVU-42		RIGID RESTRAINT	AUG	-	-	-	-	-	-	-
2	CVCS-CHRG			OWN	-	-	-	-	-	-	-
				PRE	-	-	-	-	-	-	-
---	I050830		A-30	ISI	-	-	-	-	-	-	-
F1.20A	CVU-43		U-BOLT	AUG	-	-	-	-	-	-	-
2	CVCS-CHRG			OWN	-	-	-	-	-	-	-
				PRE	-	-	-	-	-	-	-
---	I050842		A-30	ISI	-	-	-	-	-	-	-
F1.20A	CVU-45		U-BOLT	AUG	-	-	-	-	-	-	-
2	CVCS-CHRG			OWN	-	-	-	-	-	-	-
				PRE	-	-	-	-	-	-	-
---	I050966		A-29	ISI	-	-	-	-	-	-	-
F1.20A	CVU-59		RIGID RESTRAINT	AUG	-	-	-	-	-	-	-
2	CVCS-CHRG			OWN	-	-	-	-	-	-	-
				PRE	-	-	-	-	-	-	-
---	I127800	ISI/VT/VT-106	B-21	ISI	-	-	A	-	-	-	-
F1.20A	RHU-82		RIGID RESTRAINT	AUG	-	-	-	-	-	-	-
2	RHR			OWN	-	-	-	-	-	-	-
				PRE	-	-	-	-	-	-	-

Category, ItemNO, Class	Summary / CompID / System	Scope / Method / Procedure	Iso No. Comp. Desc. Code Case		Period 1 00	Period 1 02	Period 2 03	Period 2 05	Period 2 06	Period 3 08	Period 3 09
----	I128125	ISI/VT/VT-106	B-21	ISI	-	-	A	-	-	-	-
F1.20A	RHU-83	ISI/VT/VT-106	RIGID RESTRAINT	AUG	-	-	-	-	-	-	-
2	RHR			OWN	-	-	-	-	-	-	-
				PRE	-	-	-	-	-	-	-
----	I128150	ISI/VT/VT-106	B-21	ISI	-	-	A	-	-	-	-
F1.20A	RHU-84		GUIDE	AUG	-	-	-	-	-	-	-
2	RHR			OWN	-	-	-	-	-	-	-
				PRE	-	-	-	-	-	-	-
----	I128300	ISI/VT/VT-106	B-21	ISI	-	-	A	-	-	-	-
F1.20A	RHU-85	ISI/VT/VT-106	RIGID SUPPORT (IA)	AUG	-	-	-	-	-	-	-
2	RHR			OWN	-	-	-	-	-	-	-
				PRE	-	-	-	-	-	-	-
----	I129500	ISI/VT/VT-106	B-20A	ISI	-	-	A	-	-	-	-
F1.20A	RHU-73	ISI/VT/VT-106	RIGID RESTRAINT	AUG	-	-	-	-	-	-	-
2	RHR			OWN	-	-	-	-	-	-	-
				PRE	-	-	-	-	-	-	-
----	I160720	ISI/VT/VT-106	B-16B	ISI	-	-	-	e	-	-	-
F1.20A	RHU-115		HANGER	AUG	-	-	-	-	-	-	-
2	RHR			OWN	-	-	-	-	-	-	-
				PRE	-	-	-	-	-	-	-
----	I173220		B-50	ISI	-	-	-	-	-	-	-
F1.20A	SWU-83		RIGID HANGER	AUG	-	-	-	-	-	-	-
2	SW			OWN	-	-	-	-	-	-	-
				PRE	-	-	-	-	-	-	-
----	I173320		B-50A	ISI	-	-	-	-	-	-	-
F1.20A	SWU-79		RIGID HANGER	AUG	-	-	-	-	-	-	-
2	SW			OWN	-	-	-	-	-	-	-
				PRE	-	-	-	-	-	-	-
----	I173450		B-50A	ISI	-	-	-	-	-	-	-
F1.20A	SWU-75		RIGID RESTRAINT	AUG	-	-	-	-	-	-	-
2	SW			OWN	-	-	-	-	-	-	-
				PRE	-	-	-	-	-	-	-
----	I173620		B-51	ISI	-	-	-	-	-	-	-
F1.20A	SWU-367		RIGID RESTRAINT (IA)	AUG	-	-	-	-	-	-	-
2	SW			OWN	-	-	-	-	-	-	-
				PRE	-	-	-	-	-	-	-
----	I174050		B-51B	ISI	-	-	-	-	-	-	-
F1.20A	SWU-68		GUIDE	AUG	-	-	-	-	-	-	-
2	SW			OWN	-	-	-	-	-	-	-
				PRE	-	-	-	-	-	-	-

Category, ItemNO, Class	Summary / CompID / System	Scope / Method / Procedure	Iso No. Comp. Desc. Code Case		Period 1 00	Period 1 02	Period 2 03	Period 2 05	Period 2 06	Period 3 08	Period 3 09
----	I174240		B-51C	ISI	-	-	-	-	-	-	-
F1.20A	SWU-62		RIGID RESTRAINT	AUG	-	-	-	-	-	-	-
2	SW			OWN	-	-	-	-	-	-	-
				PRE	-	-	-	-	-	-	-
----	I174470		B-52	ISI	-	-	-	-	-	-	-
F1.20A	SWU-89		RIGID RESTRAINT (IA)	AUG	-	-	-	-	-	-	-
2	SW			OWN	-	-	-	-	-	-	-
				PRE	-	-	-	-	-	-	-
----	I174650		B-52A	ISI	-	-	-	-	-	-	-
F1.20A	SWU-96		RIGID RESTRAINT	AUG	-	-	-	-	-	-	-
2	SW			OWN	-	-	-	-	-	-	-
				PRE	-	-	-	-	-	-	-
----	I174690		B-52A	ISI	-	-	-	-	-	-	-
F1.20A	SWU-98		RIGID RESTRAINT	AUG	-	-	-	-	-	-	-
2	SW			OWN	-	-	-	-	-	-	-
				PRE	-	-	-	-	-	-	-
----	I174720		B-52A	ISI	-	-	-	-	-	-	-
F1.20A	SWU-100		RIGID RESTRAINT	AUG	-	-	-	-	-	-	-
2	SW			OWN	-	-	-	-	-	-	-
				PRE	-	-	-	-	-	-	-
----	I174740		B-52A	ISI	-	-	-	-	-	-	-
F1.20A	SWU-102		RIGID HANGER	AUG	-	-	-	-	-	-	-
2	SW			OWN	-	-	-	-	-	-	-
				PRE	-	-	-	-	-	-	-
----	I174910		B-52B	ISI	-	-	-	-	-	-	-
F1.20A	SWU-54		RIGID RESTRAINT	AUG	-	-	-	-	-	-	-
2	SW			OWN	-	-	-	-	-	-	-
				PRE	-	-	-	-	-	-	-
----	I174940		B-52B	ISI	-	-	-	-	-	-	-
F1.20A	SWU-52		RIGID RESTRAINT	AUG	-	-	-	-	-	-	-
2	SW			OWN	-	-	-	-	-	-	-
				PRE	-	-	-	-	-	-	-
----	I174980		B-52B	ISI	-	-	-	-	-	-	-
F1.20A	SWU-50		RIGID RESTRAINT	AUG	-	-	-	-	-	-	-
2	SW			OWN	-	-	-	-	-	-	-
				PRE	-	-	-	-	-	-	-
----	I175160		B-52B	ISI	-	-	-	-	-	-	-
F1.20A	SWU-106		RIGID RESTRAINT	AUG	-	-	-	-	-	-	-
2	SW			OWN	-	-	-	-	-	-	-
				PRE	-	-	-	-	-	-	-

Category, ItemNO, Class	Summary / CompID / System	Scope / Method / Procedure	Iso No. Comp. Desc. Code Case		Period 1 00	Period 1 02	Period 2 03	Period 2 05	Period 2 06	Period 3 08	Period 3 09
---	I175400		B-53	ISI	-	-	-	-	-	-	-
F1.20A	SWU-38		RIGID HANGER	AUG	-	-	-	-	-	-	-
2	SW			OWN	-	-	-	-	-	-	-
				PRE	-	-	-	-	-	-	-
---	I175420		B-53	ISI	-	-	-	-	-	-	-
F1.20A	SWU-40		RIGID HANGER	AUG	-	-	-	-	-	-	-
2	SW			OWN	-	-	-	-	-	-	-
				PRE	-	-	-	-	-	-	-
---	I175430		B-53	ISI	-	-	-	-	-	-	-
F1.20A	SWU-41		RIGID HANGER	AUG	-	-	-	-	-	-	-
2	SW			OWN	-	-	-	-	-	-	-
				PRE	-	-	-	-	-	-	-
---	I175480		B-53	ISI	-	-	-	-	-	-	-
F1.20A	SWU-43		RIGID RESTRAINT	AUG	-	-	-	-	-	-	-
2	SW			OWN	-	-	-	-	-	-	-
				PRE	-	-	-	-	-	-	-
---	I175610		B-53A	ISI	-	-	-	-	-	-	-
F1.20A	SWU-15		RIGID RESTRAINT	AUG	-	-	-	-	-	-	-
2	SW			OWN	-	-	-	-	-	-	-
				PRE	-	-	-	-	-	-	-
---	I175640		B-53A	ISI	-	-	-	-	-	-	-
F1.20A	SWU-14		RIGID RESTRAINT	AUG	-	-	-	-	-	-	-
2	SW			OWN	-	-	-	-	-	-	-
				PRE	-	-	-	-	-	-	-
---	I175670		B-53A	ISI	-	-	-	-	-	-	-
F1.20A	SWU-13		RIGID RESTRAINT	AUG	-	-	-	-	-	-	-
2	SW			OWN	-	-	-	-	-	-	-
				PRE	-	-	-	-	-	-	-
---	I175680		B-53A	ISI	-	-	-	-	-	-	-
F1.20A	SWU-12		RIGID RESTRAINT	AUG	-	-	-	-	-	-	-
2	SW			OWN	-	-	-	-	-	-	-
				PRE	-	-	-	-	-	-	-
---	I175710		B-53A	ISI	-	-	-	-	-	-	-
F1.20A	SWU-16		RIGID HANGER	AUG	-	-	-	-	-	-	-
2	SW			OWN	-	-	-	-	-	-	-
				PRE	-	-	-	-	-	-	-
---	I175770		B-53A	ISI	-	-	-	-	-	-	-
F1.20A	SWU-18		RIGID HANGER	AUG	-	-	-	-	-	-	-
2	SW			OWN	-	-	-	-	-	-	-
				PRE	-	-	-	-	-	-	-

Category, ItemNO, Class	Summary / CompID / System	Scope / Method / Procedure	Iso No. Comp. Desc. Code Case		Period 1 00	Period 1 02	Period 2 03	Period 2 05	Period 2 06	Period 3 08	Period 3 09
----	I175820		B-53A	ISI	-	-	-	-	-	-	-
F1.20A	SWU-20		RIGID RESTRAINT	AUG	-	-	-	-	-	-	-
2	SW			OWN	-	-	-	-	-	-	-
				PRE	-	-	-	-	-	-	-
----	I176600		C-24	ISI	-	-	-	-	-	-	-
F1.20A	AFU-207 (AFW-12)		GUIDE	AUG	-	-	-	-	-	-	-
2	SAFW			OWN	-	-	-	-	-	-	-
				PRE	-	-	-	-	-	-	-
----	I022050		A-11	ISI	-	-	-	-	-	-	-
F1.20B	CVU-62		GUIDE	AUG	-	-	-	-	-	-	-
2	CVCS-CHRG			OWN	-	-	-	-	-	-	-
				PRE	-	-	-	-	-	-	-
----	I022200	PSI/VT/VT-106	A-11	ISI	-	-	-	-	-	-	-
F1.20B	CVU-63		GUIDE	AUG	-	-	-	-	-	-	-
2	CVCS-CHRG			OWN	-	-	-	-	-	-	-
				PRE	-	-	-	s	-	-	-
----	I022425		A-11	ISI	-	-	-	-	-	-	-
F1.20B	CVU-64		GUIDE	AUG	-	-	-	-	-	-	-
2	CVCS-CHRG			OWN	-	-	-	-	-	-	-
				PRE	-	-	-	-	-	-	-
----	I022600		A-11	ISI	-	-	-	-	-	-	-
F1.20B	CVU-66		GUIDE	AUG	-	-	-	-	-	-	-
2	CVCS-CHRG			OWN	-	-	-	-	-	-	-
				PRE	-	-	-	-	-	-	-
----	I048278		A-24	ISI	-	-	-	-	-	-	-
F1.20B	CVU-140		U-BOLT	AUG	-	-	-	-	-	-	-
2	CVCS-LTDN			OWN	-	-	-	-	-	-	-
				PRE	-	-	-	-	-	-	-
----	I050425		A-25A	ISI	-	-	-	-	-	-	-
F1.20B	CVU-60		ANCHOR (IA)	AUG	-	-	-	-	-	-	-
2	CVCS-CHRG			OWN	-	-	-	-	-	-	-
				PRE	-	-	-	-	-	-	-
----	I050839		A-30	ISI	-	-	-	-	-	-	-
F1.20B	CVU-44		U-BOLT	AUG	-	-	-	-	-	-	-
2	CVCS-CHRG			OWN	-	-	-	-	-	-	-
				PRE	-	-	-	-	-	-	-
----	I050933		A-29	ISI	-	-	-	-	-	-	-
F1.20B	CVU-54		RIGID RESTRAINT (IA)	AUG	-	-	-	-	-	-	-
2	CVCS-CHRG			OWN	-	-	-	-	-	-	-
				PRE	-	-	-	-	-	-	-

Category, ItemNO, Class	Summary / CompID / System	Scope / Method / Procedure	Iso No. Comp. Desc. Code Case		Period 1 00	Period 1 02	Period 2 03	Period 2 05	Period 2 06	Period 3 08	Period 3 09
----	I050948		A-29	ISI	-	-	-	-	-	-	-
F1.20B	CVU-52		GUIDE	AUG	-	-	-	-	-	-	-
2	CVCS-CHRG			OWN	-	-	-	-	-	-	-
				PRE	-	-	-	-	-	-	-
----	I054300		A-27	ISI	-	-	-	-	-	-	-
F1.20B	CVU-50		GUIDE	AUG	-	-	-	-	-	-	-
2	CVCS-CHRG			OWN	-	-	-	-	-	-	-
				PRE	-	-	-	-	-	-	-
----	I054630		A-27	ISI	-	-	-	-	-	-	-
F1.20B	CVU-48		ANCHOR (IA)	AUG	-	-	-	-	-	-	-
2	CVCS-CHRG			OWN	-	-	-	-	-	-	-
				PRE	-	-	-	-	-	-	-
----	I129950	ISI/VT/VT-106	B-21	ISI	-	-	A	-	-	-	-
F1.20B	RHU-94	ISI/VT/VT-106	GUIDE	AUG	-	-	-	-	-	-	-
2	RHR			OWN	-	-	-	-	-	-	-
				PRE	-	-	-	-	-	-	-
----	I160715	PSI/VT/VT-106	B-16B	ISI	-	-	-	-	-	h	-
F1.20B	RHU-114	PSI/VT/VT-106	GUIDE	AUG	-	-	-	-	-	-	-
2	RHR	ISI/VT/VT-106		OWN	-	-	-	-	-	-	-
				PRE	-	-	-	s	b	-	-
----	I173035		B-50	ISI	-	-	-	-	-	-	-
F1.20B	PEN 319 ANCHOR		ANCHOR (IA)	AUG	-	-	-	-	-	-	-
2	SW			OWN	-	-	-	-	-	-	-
				PRE	-	-	-	-	-	-	-
----	I173110		B-50	ISI	-	-	-	-	-	-	-
F1.20B	SWU-80		GUIDE	AUG	-	-	-	-	-	-	-
2	SW			OWN	-	-	-	-	-	-	-
				PRE	-	-	-	-	-	-	-
----	I173170		B-50	ISI	-	-	-	-	-	-	-
F1.20B	SWU-81		GUIDE (IA)	AUG	-	-	-	-	-	-	-
2	SW			OWN	-	-	-	-	-	-	-
				PRE	-	-	-	-	-	-	-
----	I173190		B-50	ISI	-	-	-	-	-	-	-
F1.20B	SWU-82		GUIDE	AUG	-	-	-	-	-	-	-
2	SW			OWN	-	-	-	-	-	-	-
				PRE	-	-	-	-	-	-	-
----	I173350		B-50A	ISI	-	-	-	-	-	-	-
F1.20B	SWU-78		GUIDE	AUG	-	-	-	-	-	-	-
2	SW			OWN	-	-	-	-	-	-	-
				PRE	-	-	-	-	-	-	-

Category, ItemNO, Class	Summary / CompID / System	Scope / Method / Procedure	Iso No. Comp. Desc. Code Case		Period 1 00	Period 1 02	Period 2 03	Period 2 05	Period 2 06	Period 3 08	Period 3 09
----	I173370		B-50A	ISI	-	-	-	-	-	-	-
F1.20B	SWU-77		GUIDE	AUG	-	-	-	-	-	-	-
2	SW			OWN	-	-	-	-	-	-	-
				PRE	-	-	-	-	-	-	-
----	I173420		B-50A	ISI	-	-	-	-	-	-	-
F1.20B	SWU-76		GUIDE	AUG	-	-	-	-	-	-	-
2	SW			OWN	-	-	-	-	-	-	-
				PRE	-	-	-	-	-	-	-
----	I173505		B-50A	ISI	-	-	-	-	-	-	-
F1.20B	PEN 308 ANCHOR (TYPE III)		ANCHOR (IA)	AUG	-	-	-	-	-	-	-
2	SW			OWN	-	-	-	-	-	-	-
				PRE	-	-	-	-	-	-	-
----	I173645		B-51	ISI	-	-	-	-	-	-	-
F1.20B	PEN 316 ANCHOR		ANCHOR (IA)	AUG	-	-	-	-	-	-	-
2	SW			OWN	-	-	-	-	-	-	-
				PRE	-	-	-	-	-	-	-
----	I173740		B-51	ISI	-	-	-	-	-	-	-
F1.20B	SWU-84		GUIDE	AUG	-	-	-	-	-	-	-
2	SW			OWN	-	-	-	-	-	-	-
				PRE	-	-	-	-	-	-	-
----	I173800		B-51	ISI	-	-	-	-	-	-	-
F1.20B	SWU-85		GUIDE (IA)	AUG	-	-	-	-	-	-	-
2	SW			OWN	-	-	-	-	-	-	-
				PRE	-	-	-	-	-	-	-
----	I173810		B-51	ISI	-	-	-	-	-	-	-
F1.20B	SWU-86		GUIDE	AUG	-	-	-	-	-	-	-
2	SW			OWN	-	-	-	-	-	-	-
				PRE	-	-	-	-	-	-	-
----	I173820		B-51	ISI	-	-	-	-	-	-	-
F1.20B	SWU-87		U-BOLT	AUG	-	-	-	-	-	-	-
2	SW			OWN	-	-	-	-	-	-	-
				PRE	-	-	-	-	-	-	-
----	I173870		B-51	ISI	-	-	-	-	-	-	-
F1.20B	SWU-88		GUIDE (IA)	AUG	-	-	-	-	-	-	-
2	SW			OWN	-	-	-	-	-	-	-
				PRE	-	-	-	-	-	-	-
----	I174080		B-51C	ISI	-	-	-	-	-	-	-
F1.20B	SWU-67		GUIDE	AUG	-	-	-	-	-	-	-
2	SW			OWN	-	-	-	-	-	-	-
				PRE	-	-	-	-	-	-	-

Category, ItemNO, Class	Summary / CompID / System	Scope / Method / Procedure	Iso No. Comp. Desc. Code Case		Period 1 00	Period 1 02	Period 2 03	Period 2 05	Period 2 06	Period 3 08	Period 3 09
----	I174120		B-51C	ISI	-	-	-	-	-	-	-
F1.20B	SWU-66		U-BOLT	AUG	-	-	-	-	-	-	-
2	SW			OWN	-	-	-	-	-	-	-
				PRE	-	-	-	-	-	-	-
----	I174130		B-51C	ISI	-	-	-	-	-	-	-
F1.20B	SWU-65		GUIDE	AUG	-	-	-	-	-	-	-
2	SW			OWN	-	-	-	-	-	-	-
				PRE	-	-	-	-	-	-	-
----	I174150		B-51C	ISI	-	-	-	-	-	-	-
F1.20B	SWU-64		GUIDE (IA)	AUG	-	-	-	-	-	-	-
2	SW			OWN	-	-	-	-	-	-	-
				PRE	-	-	-	-	-	-	-
----	I174200		B-51C	ISI	-	-	-	-	-	-	-
F1.20B	SWU-63		GUIDE	AUG	-	-	-	-	-	-	-
2	SW			OWN	-	-	-	-	-	-	-
				PRE	-	-	-	-	-	-	-
----	I174295		B-51C	ISI	-	-	-	-	-	-	-
F1.20B	PEN 311 ANCHOR		ANCHOR (IA)	AUG	-	-	-	-	-	-	-
2	SW			OWN	-	-	-	-	-	-	-
				PRE	-	-	-	-	-	-	-
----	I174395		B-52	ISI	-	-	-	-	-	-	-
F1.20B	PEN 320 ANCHOR		ANCHOR (IA)	AUG	-	-	-	-	-	-	-
2	SW			OWN	-	-	-	-	-	-	-
				PRE	-	-	-	-	-	-	-
----	I174500		B-52	ISI	-	-	-	-	-	-	-
F1.20B	SWU-90		GUIDE	AUG	-	-	-	-	-	-	-
2	SW			OWN	-	-	-	-	-	-	-
				PRE	-	-	-	-	-	-	-
----	I174550		B-52	ISI	-	-	-	-	-	-	-
F1.20B	SWU-91		GUIDE (IA)	AUG	-	-	-	-	-	-	-
2	SW			OWN	-	-	-	-	-	-	-
				PRE	-	-	-	-	-	-	-
----	I174560		B-52	ISI	-	-	-	-	-	-	-
F1.20B	SWU-92		GUIDE	AUG	-	-	-	-	-	-	-
2	SW			OWN	-	-	-	-	-	-	-
				PRE	-	-	-	-	-	-	-
----	I174570		B-52	ISI	-	-	-	-	-	-	-
F1.20B	SWU-93		U-BOLT	AUG	-	-	-	-	-	-	-
2	SW			OWN	-	-	-	-	-	-	-
				PRE	-	-	-	-	-	-	-

Category, ItemNO, Class	Summary / CompID / System	Scope / Method / Procedure	Iso No. Comp. Desc. Code Case		Period 1 00	Period 1 02	Period 2 03	Period 2 05	Period 2 06	Period 3 08	Period 3 09
---	I174600		B-52	ISI	-	-	-	-	-	-	-
F1.20B	SWU-94		GUIDE	AUG	-	-	-	-	-	-	-
2	SW			OWN	-	-	-	-	-	-	-
				PRE	-	-	-	-	-	-	-
---	I174620		B-52	ISI	-	-	-	-	-	-	-
F1.20B	SWU-95		GUIDE (IA)	AUG	-	-	-	-	-	-	-
2	SW			OWN	-	-	-	-	-	-	-
				PRE	-	-	-	-	-	-	-
---	I174660		B-52A	ISI	-	-	-	-	-	-	-
F1.20B	SWU-97		RIGID RESTRAINT	AUG	-	-	-	-	-	-	-
2	SW			OWN	-	-	-	-	-	-	-
				PRE	-	-	-	-	-	-	-
---	I174710		B-52A	ISI	-	-	-	-	-	-	-
F1.20B	SWU-99		RIGID RESTRAINT	AUG	-	-	-	-	-	-	-
2	SW			OWN	-	-	-	-	-	-	-
				PRE	-	-	-	-	-	-	-
---	I174730		B-52A	ISI	-	-	-	-	-	-	-
F1.20B	SWU-101		RIGID RESTRAINT	AUG	-	-	-	-	-	-	-
2	SW			OWN	-	-	-	-	-	-	-
				PRE	-	-	-	-	-	-	-
---	I174770		B-52A	ISI	-	-	-	-	-	-	-
F1.20B	SWU-103		GUIDE	AUG	-	-	-	-	-	-	-
2	SW			OWN	-	-	-	-	-	-	-
				PRE	-	-	-	-	-	-	-
---	I174870		B-52B	ISI	-	-	-	-	-	-	-
F1.20B	SWU-55		RIGID RESTRAINT	AUG	-	-	-	-	-	-	-
2	SW			OWN	-	-	-	-	-	-	-
				PRE	-	-	-	-	-	-	-
---	I174920		B-52B	ISI	-	-	-	-	-	-	-
F1.20B	SWU-53		RIGID RESTRAINT	AUG	-	-	-	-	-	-	-
2	SW			OWN	-	-	-	-	-	-	-
				PRE	-	-	-	-	-	-	-
---	I174970		B-52B	ISI	-	-	-	-	-	-	-
F1.20B	SWU-51		RIGID RESTRAINT	AUG	-	-	-	-	-	-	-
2	SW			OWN	-	-	-	-	-	-	-
				PRE	-	-	-	-	-	-	-
---	I175010		B-52B	ISI	-	-	-	-	-	-	-
F1.20B	SWU-49		GUIDE	AUG	-	-	-	-	-	-	-
2	SW			OWN	-	-	-	-	-	-	-
				PRE	-	-	-	-	-	-	-

Category, ItemNO, Class	Summary / CompID / System	Scope / Method / Procedure	Iso No. Comp. Desc. Code Case		Period 1 00	Period 1 02	Period 2 03	Period 2 05	Period 2 06	Period 3 08	Period 3 09
----	I175040		B-52B	ISI	-	-	-	-	-	-	-
F1.20B	SWU-48		U-BOLT	AUG	-	-	-	-	-	-	-
2	SW			OWN	-	-	-	-	-	-	-
				PRE	-	-	-	-	-	-	-
----	I175050		B-52B	ISI	-	-	-	-	-	-	-
F1.20B	SWU-47		GUIDE	AUG	-	-	-	-	-	-	-
2	SW			OWN	-	-	-	-	-	-	-
				PRE	-	-	-	-	-	-	-
----	I175070		B-52B	ISI	-	-	-	-	-	-	-
F1.20B	SWU-46		GUIDE (IA)	AUG	-	-	-	-	-	-	-
2	SW			OWN	-	-	-	-	-	-	-
				PRE	-	-	-	-	-	-	-
----	I175110		B-52B	ISI	-	-	-	-	-	-	-
F1.20B	SWU-45		GUIDE	AUG	-	-	-	-	-	-	-
2	SW			OWN	-	-	-	-	-	-	-
				PRE	-	-	-	-	-	-	-
----	I175205		B-52B	ISI	-	-	-	-	-	-	-
F1.20B	PEN 315 ANCHOR		ANCHOR (IA)	AUG	-	-	-	-	-	-	-
2	SW			OWN	-	-	-	-	-	-	-
				PRE	-	-	-	-	-	-	-
----	I175290		B-53	ISI	-	-	-	-	-	-	-
F1.20B	SWU-371		RIGID RESTRAINT (IA)	AUG	-	-	-	-	-	-	-
2	SW			OWN	-	-	-	-	-	-	-
				PRE	-	-	-	-	-	-	-
----	I175325		B-53	ISI	-	-	-	-	-	-	-
F1.20B	PEN 312 ANCHOR		ANCHOR (IA)	AUG	-	-	-	-	-	-	-
2	SW			OWN	-	-	-	-	-	-	-
				PRE	-	-	-	-	-	-	-
----	I175410		B-53	ISI	-	-	-	-	-	-	-
F1.20B	SWU-39		GUIDE	AUG	-	-	-	-	-	-	-
2	SW			OWN	-	-	-	-	-	-	-
				PRE	-	-	-	-	-	-	-
----	I175470		B-53	ISI	-	-	-	-	-	-	-
F1.20B	SWU-42		RIGID RESTRAINT (IA)	AUG	-	-	-	-	-	-	-
2	SW			OWN	-	-	-	-	-	-	-
				PRE	-	-	-	-	-	-	-
----	I175720		B-53A	ISI	-	-	-	-	-	-	-
F1.20B	SWU-17		GUIDE	AUG	-	-	-	-	-	-	-
2	SW			OWN	-	-	-	-	-	-	-
				PRE	-	-	-	-	-	-	-

Category, ItemNO, Class	Summary / CompID / System	Scope / Method / Procedure	Iso No. Comp. Desc. Code Case		Period 1 00	Period 1 02	Period 2 03	Period 2 05	Period 2 06	Period 3 08	Period 3 09
---	I175790		B-53A	ISI	-	-	-	-	-	-	-
F1.20B	SWU-19		RIGID RESTRAINT (IA)	AUG	-	-	-	-	-	-	-
2	SW			OWN	-	-	-	-	-	-	-
				PRE	-	-	-	-	-	-	-
---	I175885		B-53A	ISI	-	-	-	-	-	-	-
F1.20B	PEN 323 ANCHOR		ANCHOR (IA)	AUG	-	-	-	-	-	-	-
2	SW			OWN	-	-	-	-	-	-	-
				PRE	-	-	-	-	-	-	-
---	I175940		B-53A	ISI	-	-	-	-	-	-	-
F1.20B	SWU-290		RIGID RESTRAINT	AUG	-	-	-	-	-	-	-
2	SW			OWN	-	-	-	-	-	-	-
				PRE	-	-	-	-	-	-	-
---	I176000		C-20	ISI	-	-	-	-	-	-	-
F1.20B	AFU-211		GUIDE	AUG	-	-	-	-	-	-	-
2	SAFW			OWN	-	-	-	-	-	-	-
				PRE	-	-	-	-	-	-	-
---	I176040		C-20	ISI	-	-	-	-	-	-	-
F1.20B	AFU-213 (AFW-15)		GUIDE	AUG	-	-	-	-	-	-	-
2	SAFW			OWN	-	-	-	-	-	-	-
				PRE	-	-	-	-	-	-	-
---	I176060		C-20	ISI	-	-	-	-	-	-	-
F1.20B	AFU-214 (AFW-16)		GUIDE (IA)	AUG	-	-	-	-	-	-	-
2	SAFW			OWN	-	-	-	-	-	-	-
				PRE	-	-	-	-	-	-	-
---	I176080		C-20	ISI	-	-	-	-	-	-	-
F1.20B	AFU-215 (AFW-17)		GUIDE (IA)	AUG	-	-	-	-	-	-	-
2	SAFW			OWN	-	-	-	-	-	-	-
				PRE	-	-	-	-	-	-	-
---	I176100		C-20	ISI	-	-	-	-	-	-	-
F1.20B	AFU-216 (AFW-18)		GUIDE	AUG	-	-	-	-	-	-	-
2	SAFW			OWN	-	-	-	-	-	-	-
				PRE	-	-	-	-	-	-	-
---	I176120		C-20	ISI	-	-	-	-	-	-	-
F1.20B	AFU-217 (AFW-19)		GUIDE (IA)	AUG	-	-	-	-	-	-	-
2	SAFW			OWN	-	-	-	-	-	-	-
				PRE	-	-	-	-	-	-	-
---	I176140		C-20	ISI	-	-	-	-	-	-	-
F1.20B	AFU-218 (AFW-20)		GUIDE (IA)	AUG	-	-	-	-	-	-	-
2	SAFW			OWN	-	-	-	-	-	-	-
				PRE	-	-	-	-	-	-	-

Category, ItemNO, Class	Summary / CompID / System	Scope / Method / Procedure	Iso No. Comp. Desc. Code Case		Period 1 00	Period 1 02	Period 2 03	Period 2 05	Period 2 06	Period 3 08	Period 3 09
---	I176160		C-20	ISI	-	-	-	-	-	-	-
F1.20B	AFU-219 (AFW-21)		GUIDE (IA)	AUG	-	-	-	-	-	-	-
2	SAFW			OWN	-	-	-	-	-	-	-
				PRE	-	-	-	-	-	-	-
---	I176180		C-20	ISI	-	-	-	-	-	-	-
F1.20B	AFU-220 (AFW-22)		GUIDE	AUG	-	-	-	-	-	-	-
2	SAFW			OWN	-	-	-	-	-	-	-
				PRE	-	-	-	-	-	-	-
---	I176200		C-20	ISI	-	-	-	-	-	-	-
F1.20B	AFU-221 (AFW-23)		GUIDE	AUG	-	-	-	-	-	-	-
2	SAFW			OWN	-	-	-	-	-	-	-
				PRE	-	-	-	-	-	-	-
---	I176220		C-20	ISI	-	-	-	-	-	-	-
F1.20B	AFU-222 (AFW-24)		GUIDE (IA)	AUG	-	-	-	-	-	-	-
2	SAFW			OWN	-	-	-	-	-	-	-
				PRE	-	-	-	-	-	-	-
---	I176240		C-20	ISI	-	-	-	-	-	-	-
F1.20B	AFU-223 (AFW-32)		GUIDE	AUG	-	-	-	-	-	-	-
2	SAFW			OWN	-	-	-	-	-	-	-
				PRE	-	-	-	-	-	-	-
---	I176420		C-24	ISI	-	-	-	-	-	-	-
F1.20B	AFU-199 (AFW-04)		GUIDE	AUG	-	-	-	-	-	-	-
2	SAFW			OWN	-	-	-	-	-	-	-
				PRE	-	-	-	-	-	-	-
---	I176440		C-24	ISI	-	-	-	-	-	-	-
F1.20B	AFU-200 (AFW-05)		GUIDE (IA)	AUG	-	-	-	-	-	-	-
2	SAFW			OWN	-	-	-	-	-	-	-
				PRE	-	-	-	-	-	-	-
---	I176460		C-24	ISI	-	-	-	-	-	-	-
F1.20B	AFU-201 (AFW-06)		GUIDE	AUG	-	-	-	-	-	-	-
2	SAFW			OWN	-	-	-	-	-	-	-
				PRE	-	-	-	-	-	-	-
---	I176480		C-24	ISI	-	-	-	-	-	-	-
F1.20B	AFU-202 (AFW-07)		GUIDE (IA)	AUG	-	-	-	-	-	-	-
2	SAFW			OWN	-	-	-	-	-	-	-
				PRE	-	-	-	-	-	-	-
---	I176500		C-24	ISI	-	-	-	-	-	-	-
F1.20B	AFU-203 (AFW-08)		GUIDE (IA)	AUG	-	-	-	-	-	-	-
2	SAFW			OWN	-	-	-	-	-	-	-
				PRE	-	-	-	-	-	-	-

Category, ItemNO, Class	Summary / CompID / System	Scope / Method / Procedure	Iso No. Comp. Desc. Code Case		Period 1 00	Period 1 02	Period 2 03	Period 2 05	Period 2 06	Period 3 08	Period 3 09
----	I176520		C-24	ISI	-	-	-	-	-	-	-
F1.20B	AFU-204 (AFW-09)		GUIDE	AUG	-	-	-	-	-	-	-
2	SAFW			OWN	-	-	-	-	-	-	-
				PRE	-	-	-	-	-	-	-
----	I501405		C-9	ISI	-	-	-	-	-	-	-
F1.20B	CCU-17		ANCHOR (IA)	AUG	-	-	-	-	-	-	-
2	AC			OWN	-	-	-	-	-	-	-
				PRE	-	-	-	-	-	-	-
----	I507200		C-21	ISI	-	-	-	-	-	-	-
F1.20B	AFU-231/256 (AFW-51)		GUIDE (IA)	AUG	-	-	-	-	-	-	-
2	SAFW			OWN	-	-	-	-	-	-	-
				PRE	-	-	-	-	-	-	-
----	I022040		A-11	ISI	-	-	-	-	-	-	-
F1.20C	CVU-61		VARIABLE SPRING	AUG	-	-	-	-	-	-	-
2	CVCS-CHRG			OWN	-	-	-	-	-	-	-
				PRE	-	-	-	-	-	-	-
----	I022500		A-11	ISI	-	-	-	-	-	-	-
F1.20C	CVU-65		VARIABLE SPRING	AUG	-	-	-	-	-	-	-
2	CVCS-CHRG			OWN	-	-	-	-	-	-	-
				PRE	-	-	-	-	-	-	-
----	I050710		A-25A	ISI	-	-	-	-	-	-	-
F1.20C	CVU-8		VARIABLE SPRING	AUG	-	-	-	-	-	-	-
2	CVCS-CHRG			OWN	-	-	-	-	-	-	-
				PRE	-	-	-	-	-	-	-
----	I050720		A-25A	ISI	-	-	-	-	-	-	-
F1.20C	CVU-7		VARIABLE SPRING	AUG	-	-	-	-	-	-	-
2	CVCS-CHRG			OWN	-	-	-	-	-	-	-
				PRE	-	-	-	-	-	-	-
----	I050857		A-30	ISI	-	-	-	-	-	-	-
F1.20C	CVU-46		MECHANICAL SNUBBER	AUG	-	-	-	-	-	-	-
2	CVCS-CHRG			OWN	-	-	-	-	-	-	-
				PRE	-	-	-	-	-	-	-
----	I050927		A-29	ISI	-	-	-	-	-	-	-
F1.20C	CVU-55		VARIABLE SPRING	AUG	-	-	-	-	-	-	-
2	CVCS-CHRG			OWN	-	-	-	-	-	-	-
				PRE	-	-	-	-	-	-	-
----	I050936		A-29	ISI	-	-	-	-	-	-	-
F1.20C	CVU-53		VARIABLE SPRING	AUG	-	-	-	-	-	-	-
2	CVCS-CHRG			OWN	-	-	-	-	-	-	-
				PRE	-	-	-	-	-	-	-

Category, ItemNO, Class	Summary / CompID / System	Scope / Method / Procedure	Iso No. Comp. Desc. Code Case		Period 1 00	Period 1 02	Period 2 03	Period 2 05	Period 2 06	Period 3 08	Period 3 09
----	I054200		A-27	ISI	-	-	-	-	-	-	-
F1.20C	CVU-51		VARIABLE SPRING	AUG	-	-	-	-	-	-	-
2	CVCS-CHRG			OWN	-	-	-	-	-	-	-
				PRE	-	-	-	-	-	-	-
----	I054400		A-27	ISI	-	-	-	-	-	-	-
F1.20C	CVU-49		MECHANICAL SNUBBER	AUG	-	-	-	-	-	-	-
2	CVCS-CHRG			OWN	-	-	-	-	-	-	-
				PRE	-	-	-	-	-	-	-
----	I054900		A-27	ISI	-	-	-	-	-	-	-
F1.20C	CVU-5		VARIABLE SPRING	AUG	-	-	-	-	-	-	-
2	CVCS-CHRG			OWN	-	-	-	-	-	-	-
				PRE	-	-	-	-	-	-	-
----	I054910		A-27	ISI	-	-	-	-	-	-	-
F1.20C	CVU-4		VARIABLE SPRING	AUG	-	-	-	-	-	-	-
2	CVCS-CHRG			OWN	-	-	-	-	-	-	-
				PRE	-	-	-	-	-	-	-
----	I126900	ISI/VT/VT-106	B-20	ISI	-	-	A	-	-	-	-
F1.20C	RHU-66		VARIABLE SPRING	AUG	-	-	-	-	-	-	-
2	RHR			OWN	-	-	-	-	-	-	-
				PRE	-	-	-	-	-	-	-
----	I129700	ISI/VT/VT-106	B-20A	ISI	-	-	A	-	-	-	-
F1.20C	RHU-72		MECHANICAL SNUBBER	AUG	-	-	-	-	-	-	-
2	RHR			OWN	-	-	-	-	-	-	-
				PRE	-	-	-	-	-	-	-
----	I130050	ISI/VT/VT-106	B-21	ISI	-	-	p	s	-	h	-
F1.20C	RHU-93	ISI/VT/VT-106	VARIABLE SPRING (IA)	AUG	-	-	-	-	-	-	-
2	RHR	ISI/VT/VT-106		OWN	-	-	-	-	-	-	-
		PSI/VT/VT-106		PRE	-	-	-	s	-	-	-
----	I130150	PSI/VT/VT-106	B-21	ISI	-	-	-	-	-	h	-
F1.20C	RHU-92	ISI/VT/VT-106	MECHANICAL SNUBBER	AUG	-	-	-	-	-	-	-
2	RHR			OWN	-	-	-	-	-	-	-
				PRE	-	-	-	s	-	-	-
----	I160725		B-16B	ISI	-	-	-	-	-	-	-
F1.20C	RHU-116		MECHANICAL SNUBBER	AUG	-	-	-	-	-	-	-
2	RHR			OWN	-	-	-	-	-	-	-
				PRE	-	-	-	-	-	-	-
----	I173540		B-50A	ISI	-	-	-	-	-	-	-
F1.20C	SWU-309		MECHANICAL SNUBBER	AUG	-	-	-	-	-	-	-
2	SW			OWN	-	-	-	-	-	-	-
				PRE	-	-	-	-	-	-	-

Category, ItemNO, Class	Summary / CompID / System	Scope / Method / Procedure	Iso No. Comp. Desc. Code Case		Period 1 00	Period 1 02	Period 2 03	Period 2 05	Period 2 06	Period 3 08	Period 3 09
----	I173550		B-50A	ISI	-	-	-	-	-	-	-
F1.20C	SWU-308		MECHANICAL SNUBBER	AUG	-	-	-	-	-	-	-
2	SW			OWN	-	-	-	-	-	-	-
				PRE	-	-	-	-	-	-	-
----	I176020		C-20	ISI	-	-	-	-	-	-	-
F1.20C	AFU-212 (AFW-14)		VARIABLE SPRING	AUG	-	-	-	-	-	-	-
2	SAFW			OWN	-	-	-	-	-	-	-
				PRE	-	-	-	-	-	-	-
----	I176260		C-20	ISI	-	-	-	-	-	-	-
F1.20C	AFU-224 (AFW-28)		HYDRAULIC SNUBBER (IA)	AUG	-	-	-	-	-	-	-
2	SAFW			OWN	-	-	-	-	-	-	-
				PRE	-	-	-	-	-	-	-
----	I176280		C-20	ISI	-	-	-	-	-	-	-
F1.20C	AFU-225 (AFW-29)		HYDRAULIC SNUBBER	AUG	-	-	-	-	-	-	-
2	SAFW			OWN	-	-	-	-	-	-	-
				PRE	-	-	-	-	-	-	-
----	I176300		C-20	ISI	-	-	-	-	-	-	-
F1.20C	AFU-226 (AFW-27)		HYDRAULIC SNUBBER	AUG	-	-	-	-	-	-	-
2	SAFW			OWN	-	-	-	-	-	-	-
				PRE	-	-	-	-	-	-	-
----	I176320		C-20	ISI	-	-	-	-	-	-	-
F1.20C	AFU-227 (AFW-31)		MECHANICAL SNUBBER (IA)	AUG	-	-	-	-	-	-	-
2	SAFW			OWN	-	-	-	-	-	-	-
				PRE	-	-	-	-	-	-	-
----	I176340		C-20	ISI	-	-	-	-	-	-	-
F1.20C	AFU-228 (AFW-30)		VARIABLE SPRING	AUG	-	-	-	-	-	-	-
2	SAFW			OWN	-	-	-	-	-	-	-
				PRE	-	-	-	-	-	-	-
----	I176360		C-20	ISI	-	-	-	-	-	-	-
F1.20C	AFU-229		HYDRAULIC SNUBBER	AUG	-	-	-	-	-	-	-
2	SAFW			OWN	-	-	-	-	-	-	-
				PRE	-	-	-	-	-	-	-
----	I176400		C-24	ISI	-	-	-	-	-	-	-
F1.20C	AFU-198 (AFW-03)		VARIABLE SPRING	AUG	-	-	-	-	-	-	-
2	SAFW			OWN	-	-	-	-	-	-	-
				PRE	-	-	-	-	-	-	-
----	I176540		C-24	ISI	-	-	-	-	-	-	-
F1.20C	AFU-205 (AFW-10)		HYDRAULIC SNUBBER	AUG	-	-	-	-	-	-	-
2	SAFW			OWN	-	-	-	-	-	-	-
				PRE	-	-	-	-	-	-	-

Category, ItemNO, Class	Summary / CompID / System	Scope / Method / Procedure	Iso No. Comp. Desc. Code Case		Period 1 00	Period 1 02	Period 2 03	Period 2 05	Period 2 06	Period 3 08	Period 3 09
----	I176560		C-24	ISI	-	-	-	-	-	-	-
F1.20C	AFU-206 (AFW-11)		VARIABLE SPRING	AUG	-	-	-	-	-	-	-
2	SAFW			OWN	-	-	-	-	-	-	-
				PRE	-	-	-	-	-	-	-
----	I176580		C-24	ISI	-	-	-	-	-	-	-
F1.20C	AFU-208 (AFW-13)		HYDRAULIC SNUBBER	AUG	-	-	-	-	-	-	-
2	SAFW			OWN	-	-	-	-	-	-	-
				PRE	-	-	-	-	-	-	-
----	I176620		C-24	ISI	-	-	-	-	-	-	-
F1.20C	AFU-209		HYDRAULIC SNUBBER	AUG	-	-	-	-	-	-	-
2	SAFW			OWN	-	-	-	-	-	-	-
				PRE	-	-	-	-	-	-	-
----	I505270	PSI/VT/VT-106	C-1C	ISI	-	-	-	-	-	h	-
F1.20C	AFU-104	ISI/VT/VT-106	VARIABLE SPRING	AUG	-	-	-	-	-	-	-
2	AFW			OWN	-	-	-	-	-	-	-
				PRE	-	-	c	-	-	-	-
----	I501675		C-11	ISI	-	-	-	-	-	-	-
F1.30A	SWU-175		RIGID RESTRAINT (IA)	AUG	-	-	-	-	-	-	-
3	SW			OWN	-	-	-	-	-	-	-
				PRE	-	-	-	-	-	-	-
----	I501685		C-11	ISI	-	-	-	-	-	-	-
F1.30A	SWU-176		RIGID RESTRAINT (IA)	AUG	-	-	-	-	-	-	-
3	SW			OWN	-	-	-	-	-	-	-
				PRE	-	-	-	-	-	-	-
----	I501690		C-11	ISI	-	-	-	-	-	-	-
F1.30A	SWU-177		RIGID RESTRAINT	AUG	-	-	-	-	-	-	-
3	SW			OWN	-	-	-	-	-	-	-
				PRE	-	-	-	-	-	-	-
----	I501700		C-11	ISI	-	-	-	-	-	-	-
F1.30A	SWU-178		RIGID RESTRAINT	AUG	-	-	-	-	-	-	-
3	SW			OWN	-	-	-	-	-	-	-
				PRE	-	-	-	-	-	-	-
----	I501710		C-11	ISI	-	-	-	-	-	-	-
F1.30A	SWU-179		GUIDE	AUG	-	-	-	-	-	-	-
3	SW			OWN	-	-	-	-	-	-	-
				PRE	-	-	-	-	-	-	-
----	I501720		C-11	ISI	-	-	-	-	-	-	-
F1.30A	SWU-180		U-BOLT	AUG	-	-	-	-	-	-	-
3	SW			OWN	-	-	-	-	-	-	-
				PRE	-	-	-	-	-	-	-

Category, ItemNO, Class	Summary / CompID / System	Scope / Method / Procedure	Iso No. Comp. Desc. Code Case		Period 1 00	Period 1 02	Period 2 03	Period 2 05	Period 2 06	Period 3 08	Period 3 09
----	I501730		C-11	ISI	-	-	-	-	-	-	-
F1.30A	SWU-181		GUIDE	AUG	-	-	-	-	-	-	-
3	SW			OWN	-	-	-	-	-	-	-
				PRE	-	-	-	-	-	-	-
----	I501740		C-11	ISI	-	-	-	-	-	-	-
F1.30A	SWU-182		U-BOLT	AUG	-	-	-	-	-	-	-
3	SW			OWN	-	-	-	-	-	-	-
				PRE	-	-	-	-	-	-	-
----	I501750		C-11	ISI	-	-	-	-	-	-	-
F1.30A	SWU-183		GUIDE	AUG	-	-	-	-	-	-	-
3	SW			OWN	-	-	-	-	-	-	-
				PRE	-	-	-	-	-	-	-
----	I501760		C-11	ISI	-	-	-	-	-	-	-
F1.30A	SWU-184		RIGID RESTRAINT	AUG	-	-	-	-	-	-	-
3	SW			OWN	-	-	-	-	-	-	-
				PRE	-	-	-	-	-	-	-
----	I501770		C-11	ISI	-	-	-	-	-	-	-
F1.30A	SWU-185		U-BOLT	AUG	-	-	-	-	-	-	-
3	SW			OWN	-	-	-	-	-	-	-
				PRE	-	-	-	-	-	-	-
----	I501785		C-11	ISI	-	-	-	-	-	-	-
F1.30A	SWU-186		RIGID HANGER (IA)	AUG	-	-	-	-	-	-	-
3	SW			OWN	-	-	-	-	-	-	-
				PRE	-	-	-	-	-	-	-
----	I502140		C-12	ISI	-	-	-	-	-	-	-
F1.30A	SWU-121		RIGID RESTRAINT	AUG	-	-	-	-	-	-	-
3	SW			OWN	-	-	-	-	-	-	-
				PRE	-	-	-	-	-	-	-
----	I502160		C-12	ISI	-	-	-	-	-	-	-
F1.30A	SWU-123		GUIDE	AUG	-	-	-	-	-	-	-
3	SW			OWN	-	-	-	-	-	-	-
				PRE	-	-	-	-	-	-	-
----	I502170		C-12	ISI	-	-	-	-	-	-	-
F1.30A	SWU-124		RIGID SUPPORT	AUG	-	-	-	-	-	-	-
3	SW			OWN	-	-	-	-	-	-	-
				PRE	-	-	-	-	-	-	-
----	I502180		C-12	ISI	-	-	-	-	-	-	-
F1.30A	SWU-125		GUIDE	AUG	-	-	-	-	-	-	-
3	SW			OWN	-	-	-	-	-	-	-
				PRE	-	-	-	-	-	-	-

Category, ItemNO, Class	Summary / CompID / System	Scope / Method / Procedure	Iso No. Comp. Desc. Code Case		Period 1 00	Period 1 02	Period 2 03	Period 2 05	Period 2 06	Period 3 08	Period 3 09
----	I502190		C-12	ISI	-	-	-	-	-	-	-
F1.30A	SWU-126		RIGID RESTRAINT	AUG	-	-	-	-	-	-	-
3	SW			OWN	-	-	-	-	-	-	-
				PRE	-	-	-	-	-	-	-
----	I502200		C-12	ISI	-	-	-	-	-	-	-
F1.30A	SWU-127		GUIDE	AUG	-	-	-	-	-	-	-
3	SW			OWN	-	-	-	-	-	-	-
				PRE	-	-	-	-	-	-	-
----	I502210		C-12	ISI	-	-	-	-	-	-	-
F1.30A	SWU-128		RIGID HANGER	AUG	-	-	-	-	-	-	-
3	SW			OWN	-	-	-	-	-	-	-
				PRE	-	-	-	-	-	-	-
----	I502220		C-12	ISI	-	-	-	-	-	-	-
F1.30A	SWU-129		RIGID RESTRAINT	AUG	-	-	-	-	-	-	-
3	SW			OWN	-	-	-	-	-	-	-
				PRE	-	-	-	-	-	-	-
----	I501790		C-11	ISI	-	-	-	-	-	-	-
F1.30B	SWU-187		GUIDE	AUG	-	-	-	-	-	-	-
3	SW			OWN	-	-	-	-	-	-	-
				PRE	-	-	-	-	-	-	-
----	I501805		C-11	ISI	-	-	-	-	-	-	-
F1.30B	SWU-188		GUIDE (IA)	AUG	-	-	-	-	-	-	-
3	SW			OWN	-	-	-	-	-	-	-
				PRE	-	-	-	-	-	-	-
----	I502150		C-12	ISI	-	-	-	-	-	-	-
F1.30B	SWU-122		GUIDE	AUG	-	-	-	-	-	-	-
3	SW			OWN	-	-	-	-	-	-	-
				PRE	-	-	-	-	-	-	-
----	I502135		C-12	ISI	-	-	-	-	-	-	-
F1.30C	SWU-120		VARIABLE SPRING (IA)	AUG	-	-	-	-	-	-	-
3	SW			OWN	-	-	-	-	-	-	-
				PRE	-	-	-	-	-	-	-
----	I072200		B-2	ISI	-	-	-	-	-	-	-
F1.40	SSFWNRHX		FLANGE-TO-SUPPORT SKIRT WELD - IA	AUG	-	-	-	-	-	-	-
3	CVCS-LTDN			OWN	-	-	-	-	-	-	-
				PRE	-	-	-	-	-	-	-
----	I072280		B-2	ISI	-	-	-	-	-	-	-
F1.40	L1		SUPPORT LEG # 1	AUG	-	-	-	-	-	-	-
3	CVCS-LTDN			OWN	-	-	-	-	-	-	-
				PRE	-	-	-	-	-	-	-

Category, ItemNO, Class	Summary / CompID / System	Scope / Method / Procedure	Iso No. Comp. Desc. Code Case		Period 1 00	Period 1 02	Period 2 03	Period 2 05	Period 2 06	Period 3 08	Period 3 09
----	I072285		B-2	ISI	-	-	-	-	-	-	-
F1.40	L2		SUPPORT LEG # 2	AUG	-	-	-	-	-	-	-
3	CVCS-LTDN			OWN	-	-	-	-	-	-	-
				PRE	-	-	-	-	-	-	-
----	I072290		B-2	ISI	-	-	-	-	-	-	-
F1.40	L3		SUPPORT LEG # 3	AUG	-	-	-	-	-	-	-
3	CVCS-LTDN			OWN	-	-	-	-	-	-	-
				PRE	-	-	-	-	-	-	-
----	I073150		B-4	ISI	-	-	-	-	-	-	-
F1.40	S1		SUPPORT LEG #1	AUG	-	-	-	-	-	-	-
3	CVCS-CHRG			OWN	-	-	-	-	-	-	-
				PRE	-	-	-	-	-	-	-
----	I073160		B-4	ISI	-	-	-	-	-	-	-
F1.40	S2		SUPPORT LEG #2	AUG	-	-	-	-	-	-	-
3	CVCS-CHRG			OWN	-	-	-	-	-	-	-
				PRE	-	-	-	-	-	-	-
----	I073170		B-4	ISI	-	-	-	-	-	-	-
F1.40	S3		SUPPORT LEG #3	AUG	-	-	-	-	-	-	-
3	CVCS-CHRG			OWN	-	-	-	-	-	-	-
				PRE	-	-	-	-	-	-	-
----	I078120		B-7	ISI	-	-	-	-	-	-	-
F1.40	SUPPORT LEG #1		SUPPORT (IA)	AUG	-	-	-	-	-	-	-
2	CVCS-CHRG			OWN	-	-	-	-	-	-	-
				PRE	-	-	-	-	-	-	-
----	I078130		B-7	ISI	-	-	-	-	-	-	-
F1.40	SUPPORT LEG #2		SUPPORT (IA)	AUG	-	-	-	-	-	-	-
2	CVCS-CHRG			OWN	-	-	-	-	-	-	-
				PRE	-	-	-	-	-	-	-
----	I078140		B-7	ISI	-	-	-	-	-	-	-
F1.40	SUPPORT LEG #3		SUPPORT (IA)	AUG	-	-	-	-	-	-	-
2	CVCS-CHRG			OWN	-	-	-	-	-	-	-
				PRE	-	-	-	-	-	-	-
----	I078620		B-7	ISI	-	-	-	-	-	-	-
F1.40	SUPPORT LEG #1		SUPPORT (IA)	AUG	-	-	-	-	-	-	-
2	CVCS-CHRG			OWN	-	-	-	-	-	-	-
				PRE	-	-	-	-	-	-	-
----	I078630		B-7	ISI	-	-	-	-	-	-	-
F1.40	SUPPORT LEG #2		SUPPORT (IA)	AUG	-	-	-	-	-	-	-
2	CVCS-CHRG			OWN	-	-	-	-	-	-	-
				PRE	-	-	-	-	-	-	-

Category, ItemNO, Class	Summary / CompID / System	Scope / Method / Procedure	Iso No. Comp. Desc. Code Case		Period 1 00	Period 1 02	Period 2 03	Period 2 05	Period 2 06	Period 3 08	Period 3 09
----	I078640		B-7	ISI	-	-	-	-	-	-	-
F1.40	SUPPORT LEG #3		SUPPORT (IA)	AUG	-	-	-	-	-	-	-
2	CVCS-CHRG			OWN	-	-	-	-	-	-	-
				PRE	-	-	-	-	-	-	-
----	I172000		B-46	ISI	-	-	-	-	-	-	-
F1.40	SIAPSC1-B1		WELDED BASE - LINEAR TYPE SUPPORT	AUG	-	-	-	-	-	-	-
2	CS			OWN	-	-	-	-	-	-	-
				PRE	-	-	-	-	-	-	-
----	I172030		B-47	ISI	-	-	-	-	-	-	-
F1.40	SIAPSC2-B2		WELDED BASE - LINEAR TYPE SUPPORT	AUG	-	-	-	-	-	-	-
2	CS			OWN	-	-	-	-	-	-	-
				PRE	-	-	-	-	-	-	-
----	I172300		B-37	ISI	-	-	-	-	-	-	-
F1.40	SIAPSI-1		WELDED BASE - LINEAR TYPE SUPPORT	AUG	-	-	-	-	-	-	-
2	HPSI			OWN	-	-	-	-	-	-	-
				PRE	-	-	-	-	-	-	-
----	I172400		B-42	ISI	-	-	-	-	-	-	-
F1.40	SIAPSI-3		WELDED BASE - LINEAR TYPE SUPPORT	AUG	-	-	-	-	-	-	-
2	HPSI			OWN	-	-	-	-	-	-	-
				PRE	-	-	-	-	-	-	-
----	I172500		B-40	ISI	-	-	-	-	-	-	-
F1.40	SIAPSI-2		WELDED BASE - LINEAR TYPE SUPPORT	AUG	-	-	-	-	-	-	-
2	HPSI			OWN	-	-	-	-	-	-	-
				PRE	-	-	-	-	-	-	-
----	I072550		B-3	ISI	-	-	-	-	-	-	-
F1.40*	L1		SUPPORT LEG #1	AUG	-	-	-	-	-	-	-
Q	CVCS-CHRG			OWN	-	-	-	-	-	-	-
				PRE	-	-	-	-	-	-	-
----	I072560		B-3	ISI	-	-	-	-	-	-	-
F1.40*	L2		SUPPORT LEG #2	AUG	-	-	-	-	-	-	-
Q	CVCS-CHRG			OWN	-	-	-	-	-	-	-
				PRE	-	-	-	-	-	-	-
----	I072570		B-3	ISI	-	-	-	-	-	-	-
F1.40*	L3		SUPPORT LEG #3	AUG	-	-	-	-	-	-	-
Q	CVCS-CHRG			OWN	-	-	-	-	-	-	-
				PRE	-	-	-	-	-	-	-
----	I072580		B-3	ISI	-	-	-	-	-	-	-
F1.40*	L4		SUPPORT LEG #4	AUG	-	-	-	-	-	-	-
Q	CVCS-CHRG			OWN	-	-	-	-	-	-	-
				PRE	-	-	-	-	-	-	-

Category, ItemNO, Class	Summary / CompID / System	Scope / Method / Procedure	Iso No. Comp. Desc. Code Case		Period 1 00	Period 1 02	Period 2 03	Period 2 05	Period 2 06	Period 3 08	Period 3 09
----	I074720		B-3	ISI	-	-	-	-	-	-	-
F1.40*	L1		SUPPORT LEG #1	AUG	-	-	-	-	-	-	-
Q	CVCS-LTDN			OWN	-	-	-	-	-	-	-
				PRE	-	-	-	-	-	-	-
----	I074740		B-3	ISI	-	-	-	-	-	-	-
F1.40*	L2		SUPPORT LEG #2	AUG	-	-	-	-	-	-	-
Q	CVCS-LTDN			OWN	-	-	-	-	-	-	-
				PRE	-	-	-	-	-	-	-
----	I074760		B-3	ISI	-	-	-	-	-	-	-
F1.40*	L3		SUPPORT LEG #3	AUG	-	-	-	-	-	-	-
Q	CVCS-LTDN			OWN	-	-	-	-	-	-	-
				PRE	-	-	-	-	-	-	-
----	I074780		B-3	ISI	-	-	-	-	-	-	-
F1.40*	L4		SUPPORT LEG #4	AUG	-	-	-	-	-	-	-
Q	CVCS-LTDN			OWN	-	-	-	-	-	-	-
				PRE	-	-	-	-	-	-	-
----	I072600		B-3	ISI	-	-	-	-	-	-	-
IA	L1		SUPPORT LEG #1 - IA	AUG	-	-	-	-	-	-	-
Q	CVCS-CHRG			OWN	-	-	-	-	-	-	-
				PRE	-	-	-	-	-	-	-
----	I072700		B-3	ISI	-	-	-	-	-	-	-
IA	L2		SUPPORT LEG #2 - IA	AUG	-	-	-	-	-	-	-
Q	CVCS-CHRG			OWN	-	-	-	-	-	-	-
				PRE	-	-	-	-	-	-	-
----	I072800		B-3	ISI	-	-	-	-	-	-	-
IA	L3		SUPPORT LEG #3 - IA	AUG	-	-	-	-	-	-	-
Q	CVCS-CHRG			OWN	-	-	-	-	-	-	-
				PRE	-	-	-	-	-	-	-
----	I072900		B-3	ISI	-	-	-	-	-	-	-
IA	L4		SUPPORT LEG #4 - IA	AUG	-	-	-	-	-	-	-
Q	CVCS-CHRG			OWN	-	-	-	-	-	-	-
				PRE	-	-	-	-	-	-	-
----	I074400		B-3	ISI	-	-	-	-	-	-	-
IA	L1		SUPPORT LEG #1 - IA	AUG	-	-	-	-	-	-	-
Q	CVCS-LTDN			OWN	-	-	-	-	-	-	-
				PRE	-	-	-	-	-	-	-
----	I074500		B-3	ISI	-	-	-	-	-	-	-
IA	L2		SUPPORT LEG #2 - IA	AUG	-	-	-	-	-	-	-
Q	CVCS-LTDN			OWN	-	-	-	-	-	-	-
				PRE	-	-	-	-	-	-	-

Category, ItemNO, Class	Summary / CompID / System	Scope / Method / Procedure	Iso No. Comp. Desc. Code Case		Period 1 00	Period 1 02	Period 2 03	Period 2 05	Period 2 06	Period 3 08	Period 3 09
----	I074600		B-3	ISI	-	-	-	-	-	-	-
IA	L3		SUPPORT LEG #3 - IA	AUG	-	-	-	-	-	-	-
Q	CVCS-LTDN			OWN	-	-	-	-	-	-	-
				PRE	-	-	-	-	-	-	-
----	I074700		B-3	ISI	-	-	-	-	-	-	-
IA	L4		SUPPORT LEG #4 - IA	AUG	-	-	-	-	-	-	-
Q	CVCS-LTDN			OWN	-	-	-	-	-	-	-
				PRE	-	-	-	-	-	-	-
/B-A	I001601		A-1	ISI	-	-	-	-	-	-	-
B1.40	RVP-HFW (1-16)		CLOSURE HEAD-TO-FLANGE CIRC WELD	AUG	-	-	-	-	-	-	-
1	RPV			OWN	-	-	-	-	-	-	-
				PRE	-	-	-	-	-	-	-
/B-A	I001602		A-1	ISI	-	-	-	-	-	-	-
B1.40	RVP-HFW (16-32)		CLOSURE HEAD-TO-FLANGE CIRC WELD	AUG	-	-	-	-	-	-	-
1	RPV			OWN	-	-	-	-	-	-	-
				PRE	-	-	-	-	-	-	-
/B-A	I001603		A-1	ISI	-	-	-	-	-	-	-
B1.40	RVP-HFW (32-1)		CLOSURE HEAD-TO-FLANGE CIRC WELD	AUG	-	-	-	-	-	-	-
1	RPV			OWN	-	-	-	-	-	-	-
				PRE	-	-	-	-	-	-	-
/B-B	I004000		A-4	ISI	-	-	-	-	-	-	-
----	C-2		UPPER SHELL-TO-LOWER SHELL CIRC WELD	AUG	-	-	-	-	-	-	-
1	PZR			OWN	-	-	-	-	-	-	-
				PRE	-	-	-	-	-	-	-
/B-D	I004200		A-4	ISI	-	-	-	-	-	-	-
----	NOZZLE-TO-VESSEL WELDS		N/A - NOZZLES ARE INTEGRALLY CAST	AUG	-	-	-	-	-	-	-
1	PZR			OWN	-	-	-	-	-	-	-
				PRE	-	-	-	-	-	-	-
/B-O	I001816		A-1	ISI	-	-	-	-	-	-	-
----	DRIVE #36		CONTROL ROD DRIVE HOUSING	AUG	-	-	-	-	-	-	-
1	RPV			OWN	-	-	-	-	-	-	-
				PRE	-	-	-	-	-	-	-
B-A	I000100	ISI/UT/TBD	A-1	ISI	-	-	-	-	-	-	s
B1.11	RPV-B		UPPER SHELL-TO-INT SHELL CIRC WELD	AUG	-	-	-	-	-	-	-
1	RPV			OWN	-	-	-	-	-	-	-
				PRE	-	-	-	-	-	-	-
B-A	I000200	ISI/UT/TBD	A-1	ISI	-	-	-	-	-	-	s
B1.11	RPV-C		INT SHELL-TO-LOWER SHELL CIRC WELD	AUG	-	-	-	-	-	-	-
1	RPV			OWN	-	-	-	-	-	-	-
				PRE	-	-	-	-	-	-	-

Category, ItemNO, Class	Summary / CompID / System	Scope / Method / Procedure	Iso No. Comp. Desc. Code Case		Period 1 00	Period 1 02	Period 2 03	Period 2 05	Period 2 06	Period 3 08	Period 3 09
B-A	I000300	ISI/UT/TBD	A-1	ISI	-	-	-	-	-	-	s
B1.11	RPV-D		LOWER SHELL-TO-RING FORGING CIRC WELD	AUG	-	-	-	-	-	-	-
1	RPV			OWN	-	-	-	-	-	-	-
				PRE	-	-	-	-	-	-	-
B-A	I000400	ISI/UT/TBD	A-1	ISI	-	-	-	-	-	-	s
B1.11	RPV-E		RING FORGING-TO-LOWER HEAD CIRC WELD	AUG	-	-	-	-	-	-	-
1	RPV			OWN	-	-	-	-	-	-	-
				PRE	-	-	-	-	-	-	-
B-A	I000501	ISI/UT/UT-203	A-1	ISI	-	-	-	-	-	-	s
B1.30	RPV-A (1-16)		VESSEL-TO-FLANGE CIRC WELD	AUG	-	-	-	-	-	-	-
1	RPV			OWN	-	-	-	-	-	-	-
				PRE	-	-	-	-	-	-	-
B-A	I000502	ISI/UT/UT-203	A-1	ISI	-	-	-	-	-	-	s
B1.30	RPV-A (16-32)		VESSEL-TO-FLANGE CIRC WELD	AUG	-	-	-	-	-	-	-
1	RPV			OWN	-	-	-	-	-	-	-
				PRE	-	-	-	-	-	-	-
B-A	I000503	ISI/UT/UT-203	A-1	ISI	-	-	-	-	-	-	s
B1.30	RPV-A (32-1)		VESSEL-TO-FLANGE CIRC WELD	AUG	-	-	-	-	-	-	-
1	RPV			OWN	-	-	-	-	-	-	-
				PRE	-	-	-	-	-	-	-
B-B	I003900	ISI/UT/UT-203	A-4	ISI	-	-	-	-	-	s	-
B2.11	C-1		UPPER HEAD-TO-UPPER SHELL CIRC WELD	AUG	-	-	-	-	-	-	-
1	PZR			OWN	-	-	-	-	-	-	-
				PRE	-	-	-	-	-	-	-
B-B	I004100	ISI/UT/REG-AUT14	A-4	ISI	-	c	-	-	-	-	-
B2.11	C-3	ISI/UT/REG-UT33	LOWER SHELL-TO-LOWER HEAD CIRC WELD	AUG	-	-	-	-	-	-	-
1	PZR	ISI/UT/ISWT-UT2		OWN	-	-	-	-	-	-	-
		ISI/UT/REG-UT33		PRE	-	-	-	-	-	-	-
B-B	I003700	ISI/UT/REG-UT33	A-4	ISI	-	-	-	-	-	s	-
B2.12	V-1		UPPER SHELL VERTICAL WELD (LONGITUDINAL)	AUG	-	-	-	-	-	-	-
1	PZR			OWN	-	-	-	-	-	-	-
				PRE	-	-	-	-	-	-	-
B-B	I003800	ISI/UT/REG-UT33	A-4	ISI	-	c	-	-	-	-	-
B2.12	V-2	ISI/UT/REG-UT33	LOWER SHELL VERTICAL WELD (LONGITUDINAL)	AUG	-	-	-	-	-	-	-
1	PZR			OWN	-	-	-	-	-	-	-
				PRE	-	-	-	-	-	-	-
B-B	I005700	ISI/UT/UT-203	A-5	ISI	-	-	-	-	-	s	-
B2.40	LHTSW-AR		LOWER HEAD-TO-TUBE SHEET WD	AUG	-	-	-	-	-	-	-
1	SG			OWN	-	-	-	-	-	-	-
				PRE	-	-	-	-	-	-	-

Category, ItemNO, Class	Summary / CompID / System	Scope / Method / Procedure	Iso No. Comp. Desc. Code Case		Period 1 00	Period 1 02	Period 2 03	Period 2 05	Period 2 06	Period 3 08	Period 3 09
B-B	I006700		A-5	ISI	-	-	-	-	-	-	-
B2.40	LHTSW-BR		LOWER HEAD-TO-TUBE SHEET WD	AUG	-	-	-	-	-	-	-
1	SG			OWN	-	-	-	-	-	-	-
				PRE	-	-	-	-	-	-	-
B-B	I008200	ISI/UT/UT-303	A-8	ISI	-	-	c	-	-	-	-
B2.60	RHE-3		SHELL TO HEAD WELD (SHELL SIDE)	AUG	-	-	-	-	-	-	-
1	CVCS-LTDN			OWN	-	-	-	-	-	-	-
				PRE	-	-	-	-	-	-	-
B-B	I008800		A-8	ISI	-	-	-	-	-	-	-
B2.60	RHE-6		SHELL TO HEAD WELD (SHELL SIDE)	AUG	-	-	-	-	-	-	-
1	CVCS-LTDN			OWN	-	-	-	-	-	-	-
				PRE	-	-	-	-	-	-	-
B-B	I009400		A-8	ISI	-	-	-	-	-	-	-
B2.60	RHE-9		SHELL TO HEAD WELD (SHELL SIDE)	AUG	-	-	-	-	-	-	-
1	CVCS-LTDN			OWN	-	-	-	-	-	-	-
				PRE	-	-	-	-	-	-	-
B-B	I007800	ISI/UT/UT-303	A-8	ISI	-	-	c	-	-	-	-
B2.80	RHE-2		SHELL-TO-SHELL WELD (SHELL SIDE)	AUG	-	-	-	-	-	-	-
1	CVCS-LTDN			OWN	-	-	-	-	-	-	-
				PRE	-	-	-	-	-	-	-
B-B	I008400		A-8	ISI	-	-	-	-	-	-	-
B2.80	RHE-5		SHELL-TO-SHELL WELD (SHELL SIDE)	AUG	-	-	-	-	-	-	-
1	CVCS-LTDN			OWN	-	-	-	-	-	-	-
				PRE	-	-	-	-	-	-	-
B-B	I009000		A-8	ISI	-	-	-	-	-	-	-
B2.80	RHE-8		SHELL-TO-SHELL WELD (SHELL SIDE)	AUG	-	-	-	-	-	-	-
1	CVCS-LTDN			OWN	-	-	-	-	-	-	-
				PRE	-	-	-	-	-	-	-
B-D	I002000	ISI/UT/UT-205	A-1A	ISI	-	-	-	-	-	-	s
B3.100	N1A-IRS		NOZZLE INSIDE RADIUS SECT.	AUG	-	-	-	-	-	-	-
1	RPV			OWN	-	-	-	-	-	-	-
				PRE	-	-	-	-	-	-	-
B-D	I002300	ISI/UT/UT-205	A-1A	ISI	-	-	-	-	-	-	s
B3.100	N2A-IRS		NOZZLE INSIDE RADIUS SECT.	AUG	-	-	-	-	-	-	-
1	RPV			OWN	-	-	-	-	-	-	-
				PRE	-	-	-	-	-	-	-
B-D	I002600	ISI/UT/UT-205	A-1A	ISI	-	-	-	-	-	-	s
B3.100	N1B-IRS		NOZZLE INSIDE RADIUS SECT.	AUG	-	-	-	-	-	-	-
1	RPV			OWN	-	-	-	-	-	-	-
				PRE	-	-	-	-	-	-	-

Category, ItemNO, Class	Summary / CompID / System	Scope / Method / Procedure	Iso No. Comp. Desc. Code Case		Period 1 00	Period 1 02	Period 2 03	Period 2 05	Period 2 06	Period 3 08	Period 3 09
B-D	I002900	ISI/UT/UT-205	A-1A	ISI	-	-	-	-	-	-	s
B3.100	N2B-IRS		NOZZLE INSIDE RADIUS SECT.	AUG	-	-	-	-	-	-	-
1	RPV			OWN	-	-	-	-	-	-	-
				PRE	-	-	-	-	-	-	-
B-D	I003200	ISI/UT/UT-205	A-1A	ISI	-	-	-	-	-	-	s
B3.100	AC-1003-IRS		NOZZLE INSIDE RADIUS SECT.	AUG	-	-	-	-	-	-	-
1	RPV			OWN	-	-	-	-	-	-	-
				PRE	-	-	-	-	-	-	-
B-D	I003500	ISI/UT/UT-205	A-1A	ISI	-	-	-	-	-	-	s
B3.100	AC-1002-IRS		NOZZLE INSIDE RADIUS SECT.	AUG	-	-	-	-	-	-	-
1	RPV			OWN	-	-	-	-	-	-	-
				PRE	-	-	-	-	-	-	-
B-D	I004300	ISI/UT/UT-205	A-4	ISI	c	-	-	-	-	-	-
B3.120	SLN		SURGE LINE NOZ-INS RAD SECT	AUG	-	-	-	-	-	-	-
1	PZR			OWN	-	-	-	-	-	-	-
				PRE	-	-	-	-	-	-	-
B-D	I004500	ISI/UT/UT-205	A-4	ISI	-	-	c	-	-	-	-
B3.120	RLN		RELIEF LINE NOZ-INS RAD SECT	AUG	-	-	-	-	-	-	-
1	PZR			OWN	-	-	-	-	-	-	-
				PRE	-	-	-	-	-	-	-
B-D	I004700	ISI/UT/UT-205	A-4	ISI	-	-	-	-	-	s	-
B3.120	SPLN		SPRAY LINE NOZ-INS RAD SECT	AUG	-	-	-	-	-	-	-
1	PZR			OWN	-	-	-	-	-	-	-
				PRE	-	-	-	-	-	-	-
B-D	I004900	ISI/UT/UT-205	A-4	ISI	-	-	-	-	-	s	-
B3.120	SAFNOZ #1		SAFETY NOZ #1-INS RAD SECT	AUG	-	-	-	-	-	-	-
1	PZR			OWN	-	-	-	-	-	-	-
				PRE	-	-	-	-	-	-	-
B-D	I005100	ISI/UT/UT-205	A-4	ISI	-	-	-	-	-	s	-
B3.120	SAFNOZ #2		SAFETY NOZ #2-INS RAD SECT	AUG	-	-	-	-	-	-	-
1	PZR			OWN	-	-	-	-	-	-	-
				PRE	-	-	-	-	-	-	-
B-D	I005900	ISI/UT/UT-205	A-5	ISI	-	c	-	-	-	-	-
B3.140	INIR-AR		INLET NOZZLE INSIDE RADIUS SECTION	AUG	-	-	-	-	-	-	-
1	SG			OWN	-	-	-	-	-	-	-
				PRE	-	-	-	-	-	-	-
B-D	I006100	ISI/UT/UT-205	A-5	ISI	-	c	-	-	-	-	-
B3.140	ONIR-AR		OUTLET NOZZLE INSIDE RADIUS SECTION	AUG	-	-	-	-	-	-	-
1	SG			OWN	-	-	-	-	-	-	-
				PRE	-	-	-	-	-	-	-

Category, ItemNO, Class	Summary / CompID / System	Scope / Method / Procedure	Iso No. Comp. Desc. Code Case		Period 1 00	Period 1 02	Period 2 03	Period 2 05	Period 2 06	Period 3 08	Period 3 09
B-D	I006900	ISI/UT/UT-205	A-5	ISI	-	-	-	-	-	s	-
B3.140	INIR-BR		INLET NOZZLE INSIDE RADIUS SECTION	AUG	-	-	-	-	-	-	-
1	SG			OWN	-	-	-	-	-	-	-
				PRE	-	-	-	-	-	-	-
B-D	I007100	ISI/UT/UT-205	A-5	ISI	-	-	-	-	-	s	-
B3.140	ONIR-BR		OUTLET NOZZLE INSIDE RADIUS SECTION	AUG	-	-	-	-	-	-	-
1	SG			OWN	-	-	-	-	-	-	-
				PRE	-	-	-	-	-	-	-
B-D	I009500	ISI/UT/UT-303	A-8	ISI	-	-	c	-	-	-	-
B3.150	RHE-N1		VESSEL-TO-NOZZLE WELD	AUG	-	-	-	-	-	-	-
1	CVCS-LTDN			OWN	-	-	-	-	-	-	-
				PRE	-	-	-	-	-	-	-
B-D	I009600		A-8	ISI	-	-	-	-	-	-	-
B3.150	RHE-N2		VESSEL-TO-NOZZLE WELD	AUG	-	-	-	-	-	-	-
1	CVCS-LTDN			OWN	-	-	-	-	-	-	-
				PRE	-	-	-	-	-	-	-
B-D	I009700		A-8	ISI	-	-	-	-	-	-	-
B3.150	RHE-N3		VESSEL-TO-NOZZLE WELD	AUG	-	-	-	-	-	-	-
1	CVCS-LTDN			OWN	-	-	-	-	-	-	-
				PRE	-	-	-	-	-	-	-
B-D	I009705		A-8	ISI	-	-	-	-	-	-	-
B3.160	RHE-N1		NOZZLE INSIDE RADIUS SECTION	AUG	-	-	-	-	-	-	-
1	CVCS-LTDN			OWN	-	-	-	-	-	-	-
				PRE	-	-	-	-	-	-	-
B-D	I009710		A-8	ISI	-	-	-	-	-	-	-
B3.160	RHE-N2		NOZZLE INSIDE RADIUS SECTION	AUG	-	-	-	-	-	-	-
1	CVCS-LTDN			OWN	-	-	-	-	-	-	-
				PRE	-	-	-	-	-	-	-
B-D	I009715		A-8	ISI	-	-	-	-	-	-	-
B3.160	RHE-N3		NOZZLE INSIDE RADIUS SECTION	AUG	-	-	-	-	-	-	-
1	CVCS-LTDN			OWN	-	-	-	-	-	-	-
				PRE	-	-	-	-	-	-	-
B-D	I009725		A-8	ISI	-	-	-	-	-	-	-
B3.160	RHE-N5		NOZZLE INSIDE RADIUS SECTION	AUG	-	-	-	-	-	-	-
1	CVCS-LTDN			OWN	-	-	-	-	-	-	-
				PRE	-	-	-	-	-	-	-
B-D	I009740		A-8	ISI	-	-	-	-	-	-	-
B3.160	RHE-N8		NOZZLE INSIDE RADIUS SECTION	AUG	-	-	-	-	-	-	-
1	CVCS-LTDN			OWN	-	-	-	-	-	-	-
				PRE	-	-	-	-	-	-	-

Category, ItemNO, Class	Summary / CompID / System	Scope / Method / Procedure	Iso No. Comp. Desc. Code Case		Period 1 00	Period 1 02	Period 2 03	Period 2 05	Period 2 06	Period 3 08	Period 3 09
B-D	I009755		A-8	ISI	-	-	-	-	-	-	-
B3.160	RHE-N11		NOZZLE INSIDE RADIUS SECTION	AUG	-	-	-	-	-	-	-
1	CVCS-LTDN			OWN	-	-	-	-	-	-	-
				PRE	-	-	-	-	-	-	-
B-D	I001900	ISI/UT/TBD	A-1A	ISI	-	-	-	-	-	-	s
B3.90	N1A		NOZZLE-VESSEL WD 028D-30M	AUG	-	-	-	-	-	-	-
1	RPV			OWN	-	-	-	-	-	-	-
				PRE	-	-	-	-	-	-	-
B-D	I002200	ISI/UT/TBD	A-1A	ISI	-	-	-	-	-	-	s
B3.90	N2A		NOZZLE-VESSEL WD 328D-30M	AUG	-	-	-	-	-	-	-
1	RPV			OWN	-	-	-	-	-	-	-
				PRE	-	-	-	-	-	-	-
B-D	I002500	ISI/UT/TBD	A-1A	ISI	-	-	-	-	-	-	s
B3.90	N1B		NOZZLE-VESSEL WD 208D-30M	AUG	-	-	-	-	-	-	-
1	RPV			OWN	-	-	-	-	-	-	-
				PRE	-	-	-	-	-	-	-
B-D	I002800	ISI/UT/TBD	A-1A	ISI	-	-	-	-	-	-	s
B3.90	N2B		NOZZLE-VESSEL WD 148D-30M	AUG	-	-	-	-	-	-	-
1	RPV			OWN	-	-	-	-	-	-	-
				PRE	-	-	-	-	-	-	-
B-D	I003100	ISI/UT/TBD	A-1A	ISI	-	-	-	-	-	-	s
B3.90	AC-1003		NOZZLE-VESSEL WD 108D-30M	AUG	-	-	-	-	-	-	-
1	RPV			OWN	-	-	-	-	-	-	-
				PRE	-	-	-	-	-	-	-
B-D	I003400	ISI/UT/TBD	A-1A	ISI	-	-	-	-	-	-	s
B3.90	AC-1002		NOZZLE-VESSEL WD 288D-30M	AUG	-	-	-	-	-	-	-
1	RPV			OWN	-	-	-	-	-	-	-
				PRE	-	-	-	-	-	-	-
B-F	I002100	ISI/PT/PT-106	A-3-1A	ISI	-	-	-	-	-	-	s
B5.10	PL-FW-II	ISI/UT/TBD	NOZZLE-TO-PIPE (BUTTERED WELD)	AUG	-	-	-	-	-	-	-
1	RPV			OWN	-	-	-	-	-	-	-
				PRE	-	-	-	-	-	-	-
B-F	I002400	ISI/PT/PT-106	A-3-1C	ISI	-	-	-	-	-	-	s
B5.10	PL-FW-V	ISI/UT/TBD	ELBOW-TO-NOZZLE (BUTTERED WELD)	AUG	-	-	-	-	-	-	-
1	RPV			OWN	-	-	-	-	-	-	-
				PRE	-	-	-	-	-	-	-
B-F	I002700	ISI/PT/PT-106	A-3-2A	ISI	-	-	-	-	-	-	s
B5.10	PL-FW-IV	ISI/UT/TBD	NOZZLE-TO-PIPE (BUTTERED WELD)	AUG	-	-	-	-	-	-	-
1	RPV			OWN	-	-	-	-	-	-	-
				PRE	-	-	-	-	-	-	-

Category, ItemNO, Class	Summary / CompID / System	Scope / Method / Procedure	Iso No. Comp. Desc. Code Case		Period 1 00	Period 1 02	Period 2 03	Period 2 05	Period 2 06	Period 3 08	Period 3 09
B-F	I003000	ISI/PT/PT-106	A-3-2C	ISI	-	-	-	-	-	-	s
B5.10	PL-FW-VII	ISI/UT/TBD	ELBOW-TO-NOZZLE (BUTTERED WELD)	AUG	-	-	-	-	-	-	-
1	RPV			OWN	-	-	-	-	-	-	-
				PRE	-	-	-	-	-	-	-
B-F	I003300	ISI/PT/PT-106	A-2	ISI	-	-	-	-	-	-	s
B5.10	AC-1003-1	ISI/UT/TBD	SAFE END-TO-NOZZLE (SI LINE)	AUG	-	-	-	-	-	-	-
1	RPV			OWN	-	-	-	-	-	-	-
				PRE	-	-	-	-	-	-	-
B-F	I003600	ISI/PT/PT-106	A-2	ISI	-	-	-	-	-	-	s
B5.10	AC-1002-1	ISI/UT/TBD	SAFE END-TO-NOZZLE (SI LINE)	AUG	-	-	-	-	-	-	-
1	RPV			OWN	-	-	-	-	-	-	-
				PRE	-	-	-	-	-	-	-
B-F	I004350	ISI/PT/PT-106	A-4	ISI	c	-	E	-	-	-	-
B5.40	SLN SE	ISI/UT/UT-204	NOZZLE-TO-SAFE END (SURGE LINE)	AUG	-	-	-	-	-	-	-
1	PZR	ISI/PT/PT-106		OWN	-	-	-	s	-	-	-
		ISI/RT/RT-104		PRE	-	-	-	-	-	-	-
B-F	I004600	ISI/PT/PT-106	A-4	ISI	-	c	E	-	-	-	-
B5.40	RC-2501-ASW-1A	ISI/UT/UT-204	NOZZLE-TO-SAFE END (RELIEF LINE)	AUG	-	-	-	-	-	-	-
1	PZR	ISI/PT/PT-106		OWN	-	-	-	s	-	-	-
		ISI/RT/RT-104		PRE	-	-	-	-	-	-	-
B-F	I004800	ISI/RT/RT-104	A-4	ISI	-	-	c	-	-	-	-
B5.40	RC-1000-MSW-1	ISI/PT/PT-106	SAFE END-TO-NOZZLE (SPRAY LINE)	AUG	-	-	-	-	-	-	-
1	PZR	OWN/PT/PT-106		OWN	-	-	-	s	-	-	-
		OWN/RT/RT-104		PRE	-	-	-	-	-	-	-
B-F	I005000	ISI/RT/RT-104	A-4	ISI	-	-	c	-	-	-	-
B5.40	RC-273-I	ISI/PT/PT-106	NOZZLE-TO-SAFE END (SAFETY #1)	AUG	-	-	-	-	-	-	-
1	PZR	ISI/PT/PT-106		OWN	-	-	-	s	-	-	-
		ISI/RT/RT-104		PRE	-	-	-	-	-	-	-
B-F	I005200	ISI/RT/RT-104	A-4	ISI	-	-	c	-	-	-	-
B5.40	RC-273-S	ISI/PT/PT-106	NOZZLE-TO-SAFE END (SAFETY #2)	AUG	-	-	-	-	-	-	-
1	PZR	OWN/PT/PT-106		OWN	-	-	-	s	-	-	-
		OWN/RT/RT-104		PRE	-	-	-	-	-	-	-
B-F	I005990	ISI/PT/PT-106	A-3-1A	ISI	-	c	-	-	-	-	-
B5.70	NSE-1R	ISI/RT/RT-104	SAFE END-TO-NOZZLE (INLET)	AUG	-	-	-	-	-	-	-
1	SG			OWN	-	-	-	-	-	-	-
				PRE	-	-	-	-	-	-	-
B-F	I006190	ISI/PT/PT-106	A-3-1B	ISI	-	c	-	-	-	-	-
B5.70	NSE-2R	ISI/RT/RT-104	NOZZLE-TO-SAFE END (OUTLET)	AUG	-	-	-	-	-	-	-
1	SG			OWN	-	-	-	-	-	-	-
				PRE	-	-	-	-	-	-	-

Category, ItemNO, Class	Summary / CompID / System	Scope / Method / Procedure	Iso No. Comp. Desc. Code Case		Period 1 00	Period 1 02	Period 2 03	Period 2 05	Period 2 06	Period 3 08	Period 3 09
B-F	I006990	ISI/PT/PT-106	A-3-2A	ISI	-	-	-	-	s	-	-
B5.70	NSE-3R	ISI/UT/UT-204	SAFE END-TO-NOZZLE (INLET)	AUG	-	-	-	-	-	-	-
1	SG			OWN	-	-	-	-	-	-	-
				PRE	-	-	-	-	-	-	-
B-F	I007190	ISI/PT/PT-106	A-3-2B	ISI	-	-	-	-	s	-	-
B5.70	NSE-4R	ISI/UT/UT-204	NOZZLE-TO-SAFE END (OUTLET)	AUG	-	-	-	-	-	-	-
1	SG			OWN	-	-	-	-	-	-	-
				PRE	-	-	-	-	-	-	-
B-G-1	I001001	ISI/VT/VT-108	A-1	ISI	-	-	-	-	-	-	s
B6.10	NUT #1		CLOSURE NUTS,REMOVED(48TOT)	AUG	-	-	-	-	-	-	-
1	RPV			OWN	-	-	-	-	-	-	-
				PRE	-	-	-	-	-	-	-
B-G-1	I001002	ISI/VT/VT-108	A-1	ISI	-	-	-	-	-	-	s
B6.10	NUT #2		CLOSURE NUTS,REMOVED(48TOT)	AUG	-	-	-	-	-	-	-
1	RPV			OWN	-	-	-	-	-	-	-
				PRE	-	-	-	-	-	-	-
B-G-1	I001003		A-1	ISI	-	-	-	-	-	-	s
B6.10	NUT #3		CLOSURE NUTS,REMOVED(48TOT)	AUG	-	-	-	-	-	-	-
1	RPV			OWN	-	-	-	-	-	-	-
				PRE	-	-	-	-	-	-	-
B-G-1	I001004	ISI/VT/VT-108	A-1	ISI	-	-	-	-	-	-	s
B6.10	NUT #4		CLOSURE NUTS,REMOVED(48TOT)	AUG	-	-	-	-	-	-	-
1	RPV			OWN	-	-	-	-	-	-	-
				PRE	-	-	-	-	-	-	-
B-G-1	I001005	ISI/VT/VT-108	A-1	ISI	-	-	-	-	-	-	s
B6.10	NUT #5		CLOSURE NUTS,REMOVED(48TOT)	AUG	-	-	-	-	-	-	-
1	RPV			OWN	-	-	-	-	-	-	-
				PRE	-	-	-	-	-	-	-
B-G-1	I001006	ISI/VT/VT-108	A-1	ISI	-	-	-	-	-	-	s
B6.10	NUT #6		CLOSURE NUTS,REMOVED(48TOT)	AUG	-	-	-	-	-	-	-
1	RPV			OWN	-	-	-	-	-	-	-
				PRE	-	-	-	-	-	-	-
B-G-1	I001007	ISI/VT/VT-108	A-1	ISI	-	-	-	-	-	-	s
B6.10	NUT #7		CLOSURE NUTS,REMOVED(48TOT)	AUG	-	-	-	-	-	-	-
1	RPV			OWN	-	-	-	-	-	-	-
				PRE	-	-	-	-	-	-	-
B-G-1	I001008	ISI/VT/VT-108	A-1	ISI	-	-	-	-	-	-	s
B6.10	NUT #8		CLOSURE NUTS,REMOVED(48TOT)	AUG	-	-	-	-	-	-	-
1	RPV			OWN	-	-	-	-	-	-	-
				PRE	-	-	-	-	-	-	-

Category, ItemNO, Class	Summary / CompID / System	Scope / Method / Procedure	Iso No. Comp. Desc. Code Case		Period 1 00	Period 1 02	Period 2 03	Period 2 05	Period 2 06	Period 3 08	Period 3 09
B-G-1	I001009	ISI/VT/VT-108	A-1	ISI	-	-	-	-	-	-	s
B6.10	NUT #9		CLOSURE NUTS,REMOVED(48TOT)	AUG	-	-	-	-	-	-	-
1	RPV			OWN	-	-	-	-	-	-	-
				PRE	-	-	-	-	-	-	-
B-G-1	I001010	ISI/VT/VT-108	A-1	ISI	-	-	-	-	-	-	s
B6.10	NUT #10		CLOSURE NUTS,REMOVED(48TOT)	AUG	-	-	-	-	-	-	-
1	RPV			OWN	-	-	-	-	-	-	-
				PRE	-	-	-	-	-	-	-
B-G-1	I001011	ISI/VT/VT-108	A-1	ISI	-	-	-	-	-	-	s
B6.10	NUT #11		CLOSURE NUTS,REMOVED(48TOT)	AUG	-	-	-	-	-	-	-
1	RPV			OWN	-	-	-	-	-	-	-
				PRE	-	-	-	-	-	-	-
B-G-1	I001012	ISI/VT/VT-108	A-1	ISI	-	-	-	-	-	-	s
B6.10	NUT #12		CLOSURE NUTS,REMOVED(48TOT)	AUG	-	-	-	-	-	-	-
1	RPV			OWN	-	-	-	-	-	-	-
				PRE	-	-	-	-	-	-	-
B-G-1	I001013	ISI/VT/VT-108	A-1	ISI	-	-	-	-	-	-	s
B6.10	NUT #13		CLOSURE NUTS,REMOVED(48TOT)	AUG	-	-	-	-	-	-	-
1	RPV			OWN	-	-	-	-	-	-	-
				PRE	-	-	-	-	-	-	-
B-G-1	I001014	ISI/VT/VT-108	A-1	ISI	-	-	-	-	-	-	s
B6.10	NUT #14		CLOSURE NUTS,REMOVED(48TOT)	AUG	-	-	-	-	-	-	-
1	RPV			OWN	-	-	-	-	-	-	-
				PRE	-	-	-	-	-	-	-
B-G-1	I001015	ISI/VT/VT-108	A-1	ISI	-	-	-	-	-	-	s
B6.10	NUT #15		CLOSURE NUTS,REMOVED(48TOT)	AUG	-	-	-	-	-	-	-
1	RPV			OWN	-	-	-	-	-	-	-
				PRE	-	-	-	-	-	-	-
B-G-1	I001016		A-1	ISI	-	-	-	-	-	-	s
B6.10	NUT #16		CLOSURE NUTS,REMOVED(48TOT)	AUG	-	-	-	-	-	-	-
1	RPV			OWN	-	-	-	-	-	-	-
				PRE	-	-	-	-	-	-	-
B-G-1	I001017	ISI/VT/VT-108	A-1	ISI	-	-	-	-	-	-	s
B6.10	NUT #17		CLOSURE NUTS,REMOVED(48TOT)	AUG	-	-	-	-	-	-	-
1	RPV			OWN	-	-	-	-	-	-	-
				PRE	-	-	-	-	-	-	-
B-G-1	I001018	ISI/VT/VT-108	A-1	ISI	-	-	-	-	-	-	s
B6.10	NUT #18		CLOSURE NUTS,REMOVED(48TOT)	AUG	-	-	-	-	-	-	-
1	RPV			OWN	-	-	-	-	-	-	-
				PRE	-	-	-	-	-	-	-

Category, ItemNO, Class	Summary / CompID / System	Scope / Method / Procedure	Iso No. Comp. Desc. Code Case		Period 1 00	Period 1 02	Period 2 03	Period 2 05	Period 2 06	Period 3 08	Period 3 09
B-G-1	I001019	ISI/VT/VT-108	A-1	ISI	-	-	-	-	-	-	s
B6.10	NUT #19		CLOSURE NUTS,REMOVED(48TOT)	AUG	-	-	-	-	-	-	-
1	RPV			OWN	-	-	-	-	-	-	-
				PRE	-	-	-	-	-	-	-
B-G-1	I001020	ISI/VT/VT-108	A-1	ISI	-	-	-	-	-	-	s
B6.10	NUT #20		CLOSURE NUTS,REMOVED(48TOT)	AUG	-	-	-	-	-	-	-
1	RPV			OWN	-	-	-	-	-	-	-
				PRE	-	-	-	-	-	-	-
B-G-1	I001021	ISI/VT/VT-108	A-1	ISI	-	-	-	-	-	-	s
B6.10	NUT #21		CLOSURE NUTS,REMOVED(48TOT)	AUG	-	-	-	-	-	-	-
1	RPV			OWN	-	-	-	-	-	-	-
				PRE	-	-	-	-	-	-	-
B-G-1	I001022	ISI/VT/VT-108	A-1	ISI	-	-	-	-	-	-	s
B6.10	NUT #22		CLOSURE NUTS,REMOVED(48TOT)	AUG	-	-	-	-	-	-	-
1	RPV			OWN	-	-	-	-	-	-	-
				PRE	-	-	-	-	-	-	-
B-G-1	I001023	ISI/VT/VT-108	A-1	ISI	-	-	-	-	-	-	s
B6.10	NUT #23		CLOSURE NUTS,REMOVED(48TOT)	AUG	-	-	-	-	-	-	-
1	RPV			OWN	-	-	-	-	-	-	-
				PRE	-	-	-	-	-	-	-
B-G-1	I001024	ISI/VT/VT-108	A-1	ISI	-	-	-	-	-	-	s
B6.10	NUT #24		CLOSURE NUTS,REMOVED(48TOT)	AUG	-	-	-	-	-	-	-
1	RPV			OWN	-	-	-	-	-	-	-
				PRE	-	-	-	-	-	-	-
B-G-1	I001025	ISI/VT/VT-108	A-1	ISI	-	-	-	-	-	-	s
B6.10	NUT #25		CLOSURE NUTS,REMOVED(48TOT)	AUG	-	-	-	-	-	-	-
1	RPV			OWN	-	-	-	-	-	-	-
				PRE	-	-	-	-	-	-	-
B-G-1	I001026	ISI/VT/VT-108	A-1	ISI	-	-	-	-	-	-	s
B6.10	NUT #26		CLOSURE NUTS,REMOVED(48TOT)	AUG	-	-	-	-	-	-	-
1	RPV			OWN	-	-	-	-	-	-	-
				PRE	-	-	-	-	-	-	-
B-G-1	I001027	ISI/VT/VT-108	A-1	ISI	-	-	-	-	-	-	s
B6.10	NUT #27		CLOSURE NUTS,REMOVED(48TOT)	AUG	-	-	-	-	-	-	-
1	RPV			OWN	-	-	-	-	-	-	-
				PRE	-	-	-	-	-	-	-
B-G-1	I001028	ISI/VT/VT-108	A-1	ISI	-	-	-	-	-	-	s
B6.10	NUT #28		CLOSURE NUTS,REMOVED(48TOT)	AUG	-	-	-	-	-	-	-
1	RPV			OWN	-	-	-	-	-	-	-
				PRE	-	-	-	-	-	-	-

Category, ItemNO, Class	Summary / CompID / System	Scope / Method / Procedure	Iso No. Comp. Desc. Code Case		Period 1 00	Period 1 02	Period 2 03	Period 2 05	Period 2 06	Period 3 08	Period 3 09
B-G-1	I001029	ISI/VT/VT-108	A-1	ISI	-	-	-	-	-	-	s
B6.10	NUT #29		CLOSURE NUTS,REMOVED(48TOT)	AUG	-	-	-	-	-	-	-
1	RPV			OWN	-	-	-	-	-	-	-
				PRE	-	-	-	-	-	-	-
B-G-1	I001030	ISI/VT/VT-108	A-1	ISI	-	-	-	-	-	-	s
B6.10	NUT #30		CLOSURE NUTS,REMOVED(48TOT)	AUG	-	-	-	-	-	-	-
1	RPV			OWN	-	-	-	-	-	-	-
				PRE	-	-	-	-	-	-	-
B-G-1	I001031	ISI/VT/VT-108	A-1	ISI	-	-	-	-	-	-	s
B6.10	NUT #31		CLOSURE NUTS,REMOVED(48TOT)	AUG	-	-	-	-	-	-	-
1	RPV			OWN	-	-	-	-	-	-	-
				PRE	-	-	-	-	-	-	-
B-G-1	I001032	ISI/VT/VT-108	A-1	ISI	-	-	-	-	-	-	s
B6.10	NUT #32		CLOSURE NUTS,REMOVED(48TOT)	AUG	-	-	-	-	-	-	-
1	RPV			OWN	-	-	-	-	-	-	-
				PRE	-	-	-	-	-	-	-
B-G-1	I001033	ISI/VT/VT-108	A-1	ISI	-	-	-	-	-	-	s
B6.10	NUT #33		CLOSURE NUTS,REMOVED(48TOT)	AUG	-	-	-	-	-	-	-
1	RPV			OWN	-	-	-	-	-	-	-
				PRE	-	-	-	-	-	-	-
B-G-1	I001034	ISI/VT/VT-108	A-1	ISI	-	-	-	-	-	-	s
B6.10	NUT #34		CLOSURE NUTS,REMOVED(48TOT)	AUG	-	-	-	-	-	-	-
1	RPV			OWN	-	-	-	-	-	-	-
				PRE	-	-	-	-	-	-	-
B-G-1	I001035	ISI/VT/VT-108	A-1	ISI	-	-	-	-	-	-	s
B6.10	NUT #35		CLOSURE NUTS,REMOVED(48TOT)	AUG	-	-	-	-	-	-	-
1	RPV			OWN	-	-	-	-	-	-	-
				PRE	-	-	-	-	-	-	-
B-G-1	I001036	ISI/VT/VT-108	A-1	ISI	-	-	-	-	-	-	s
B6.10	NUT #36		CLOSURE NUTS,REMOVED(48TOT)	AUG	-	-	-	-	-	-	-
1	RPV			OWN	-	-	-	-	-	-	-
				PRE	-	-	-	-	-	-	-
B-G-1	I001037	ISI/VT/VT-108	A-1	ISI	-	-	-	-	-	-	s
B6.10	NUT #37		CLOSURE NUTS,REMOVED(48TOT)	AUG	-	-	-	-	-	-	-
1	RPV			OWN	-	-	-	-	-	-	-
				PRE	-	-	-	-	-	-	-
B-G-1	I001038	ISI/VT/VT-108	A-1	ISI	-	-	-	-	-	-	s
B6.10	NUT #38		CLOSURE NUTS,REMOVED(48TOT)	AUG	-	-	-	-	-	-	-
1	RPV			OWN	-	-	-	-	-	-	-
				PRE	-	-	-	-	-	-	-

Category, ItemNO, Class	Summary / CompID / System	Scope / Method / Procedure	Iso No. Comp. Desc. Code Case		Period 1 00	Period 1 02	Period 2 03	Period 2 05	Period 2 06	Period 3 08	Period 3 09
B-G-1	I001039	ISI/VT/VT-108	A-1	ISI	-	-	-	-	-	-	s
B6.10	NUT #39		CLOSURE NUTS,REMOVED(48TOT)	AUG	-	-	-	-	-	-	-
1	RPV			OWN	-	-	-	-	-	-	-
				PRE	-	-	-	-	-	-	-
B-G-1	I001040	ISI/VT/VT-108	A-1	ISI	-	-	-	-	-	-	s
B6.10	NUT #40		CLOSURE NUTS,REMOVED(48TOT)	AUG	-	-	-	-	-	-	-
1	RPV			OWN	-	-	-	-	-	-	-
				PRE	-	-	-	-	-	-	-
B-G-1	I001041	ISI/VT/VT-108	A-1	ISI	-	-	-	-	-	-	s
B6.10	NUT #41		CLOSURE NUTS,REMOVED(48TOT)	AUG	-	-	-	-	-	-	-
1	RPV			OWN	-	-	-	-	-	-	-
				PRE	-	-	-	-	-	-	-
B-G-1	I001042	ISI/VT/VT-108	A-1	ISI	-	-	-	-	-	-	s
B6.10	NUT #42		CLOSURE NUTS,REMOVED(48TOT)	AUG	-	-	-	-	-	-	-
1	RPV			OWN	-	-	-	-	-	-	-
				PRE	-	-	-	-	-	-	-
B-G-1	I001043	ISI/VT/VT-108	A-1	ISI	-	-	-	-	-	-	s
B6.10	NUT #43		CLOSURE NUTS,REMOVED(48TOT)	AUG	-	-	-	-	-	-	-
1	RPV			OWN	-	-	-	-	-	-	-
				PRE	-	-	-	-	-	-	-
B-G-1	I001044	ISI/VT/VT-108	A-1	ISI	-	-	-	-	-	-	s
B6.10	NUT #44		CLOSURE NUTS,REMOVED(48TOT)	AUG	-	-	-	-	-	-	-
1	RPV			OWN	-	-	-	-	-	-	-
				PRE	-	-	-	-	-	-	-
B-G-1	I001045	ISI/VT/VT-108	A-1	ISI	-	-	-	-	-	-	s
B6.10	NUT #45		CLOSURE NUTS,REMOVED(48TOT)	AUG	-	-	-	-	-	-	-
1	RPV			OWN	-	-	-	-	-	-	-
				PRE	-	-	-	-	-	-	-
B-G-1	I001046	ISI/VT/VT-108	A-1	ISI	-	-	-	-	-	-	s
B6.10	NUT #46		CLOSURE NUTS,REMOVED(48TOT)	AUG	-	-	-	-	-	-	-
1	RPV			OWN	-	-	-	-	-	-	-
				PRE	-	-	-	-	-	-	-
B-G-1	I001047	ISI/VT/VT-108	A-1	ISI	-	-	-	-	-	-	s
B6.10	NUT #47		CLOSURE NUTS,REMOVED(48TOT)	AUG	-	-	-	-	-	-	-
1	RPV			OWN	-	-	-	-	-	-	-
				PRE	-	-	-	-	-	-	-
B-G-1	I001048	ISI/VT/VT-108	A-1	ISI	-	-	-	-	-	-	s
B6.10	NUT #48		CLOSURE NUTS,REMOVED(48TOT)	AUG	-	-	-	-	-	-	-
1	RPV			OWN	-	-	-	-	-	-	-
				PRE	-	-	-	-	-	-	-

Category, ItemNO, Class	Summary / CompID / System	Scope / Method / Procedure	Iso No. Comp. Desc. Code Case		Period 1 00	Period 1 02	Period 2 03	Period 2 05	Period 2 06	Period 3 08	Period 3 09
B-G-1	I056801	ISI/UT/UT-401	A-7	ISI	r	r	r	t	t	t	t
B6.180	STUD #1	ISI/UT/UT-401	BOLTING (24 TOTAL)	AUG	-	-	-	-	-	-	-
1	RC			OWN	-	-	-	-	-	-	-
				PRE	-	-	-	-	-	-	-
B-G-1	I056802	ISI/UT/UT-401	A-7	ISI	r	r	r	t	t	t	t
B6.180	STUD #2	ISI/UT/UT-401	BOLTING (24 TOTAL)	AUG	-	-	-	-	-	-	-
1	RC			OWN	-	-	-	-	-	-	-
				PRE	-	-	-	-	-	-	-
B-G-1	I056803	ISI/UT/UT-401	A-7	ISI	r	r	r	t	t	t	t
B6.180	STUD #3	ISI/UT/UT-401	BOLTING (24 TOTAL)	AUG	-	-	-	-	-	-	-
1	RC			OWN	-	-	-	-	-	-	-
				PRE	-	-	-	-	-	-	-
B-G-1	I056804	ISI/UT/UT-401	A-7	ISI	r	r	r	t	t	t	t
B6.180	STUD #4	ISI/UT/UT-401	BOLTING (24 TOTAL)	AUG	-	-	-	-	-	-	-
1	RC			OWN	-	-	-	-	-	-	-
				PRE	-	-	-	-	-	-	-
B-G-1	I056805	ISI/UT/UT-401	A-7	ISI	r	r	r	t	t	t	t
B6.180	STUD #5	ISI/UT/UT-401	BOLTING (24 TOTAL)	AUG	-	-	-	-	-	-	-
1	RC			OWN	-	-	-	-	-	-	-
				PRE	-	-	-	-	-	-	-
B-G-1	I056806	ISI/UT/UT-401	A-7	ISI	r	r	r	t	t	t	t
B6.180	STUD #6	ISI/UT/UT-401	BOLTING (24 TOTAL)	AUG	-	-	-	-	-	-	-
1	RC			OWN	-	-	-	-	-	-	-
				PRE	-	-	-	-	-	-	-
B-G-1	I056807	ISI/UT/UT-401	A-7	ISI	r	r	r	t	t	t	t
B6.180	STUD #7	ISI/UT/UT-401	BOLTING (24 TOTAL)	AUG	-	-	-	-	-	-	-
1	RC			OWN	-	-	-	-	-	-	-
				PRE	-	-	-	-	-	-	-
B-G-1	I056808	ISI/UT/UT-401	A-7	ISI	r	r	r	t	t	t	t
B6.180	STUD #8	ISI/UT/UT-401	BOLTING (24 TOTAL)	AUG	-	-	-	-	-	-	-
1	RC			OWN	-	-	-	-	-	-	-
				PRE	-	-	-	-	-	-	-
B-G-1	I056809	ISI/UT/UT-401	A-7	ISI	r	r	r	t	t	t	t
B6.180	STUD #9	ISI/UT/UT-401	BOLTING (24 TOTAL)	AUG	-	-	-	-	-	-	-
1	RC			OWN	-	-	-	-	-	-	-
				PRE	-	-	-	-	-	-	-
B-G-1	I056810	ISI/UT/UT-401	A-7	ISI	r	r	r	t	t	t	t
B6.180	STUD #10		BOLTING (24 TOTAL)	AUG	-	-	-	-	-	-	-
1	RC			OWN	-	-	-	-	-	-	-
				PRE	-	-	-	-	-	-	-

Category, ItemNO, Class	Summary / CompID / System	Scope / Method / Procedure	Iso No. Comp. Desc. Code Case		Period 1 00	Period 1 02	Period 2 03	Period 2 05	Period 2 06	Period 3 08	Period 3 09
B-G-1	I056811	ISI/UT/UT-401	A-7	ISI	r	r	r	t	t	t	t
B6.180	STUD #11	ISI/UT/UT-401	BOLTING (24 TOTAL)	AUG	-	-	-	-	-	-	-
1	RC			OWN	-	-	-	-	-	-	-
				PRE	-	-	-	-	-	-	-
B-G-1	I056812	ISI/UT/UT-401	A-7	ISI	r	r	r	t	t	t	t
B6.180	STUD #12	ISI/UT/UT-401	BOLTING (24 TOTAL)	AUG	-	-	-	-	-	-	-
1	RC			OWN	-	-	-	-	-	-	-
				PRE	-	-	-	-	-	-	-
B-G-1	I056813	ISI/UT/UT-401	A-7	ISI	r	r	r	t	t	t	t
B6.180	STUD #13	ISI/UT/UT-401	BOLTING (24 TOTAL)	AUG	-	-	-	-	-	-	-
1	RC			OWN	-	-	-	-	-	-	-
				PRE	-	-	-	-	-	-	-
B-G-1	I056814	ISI/UT/UT-401	A-7	ISI	r	r	r	t	t	t	t
B6.180	STUD #14	ISI/UT/UT-401	BOLTING (24 TOTAL)	AUG	-	-	-	-	-	-	-
1	RC			OWN	-	-	-	-	-	-	-
				PRE	-	-	-	-	-	-	-
B-G-1	I056815	ISI/UT/UT-401	A-7	ISI	r	r	r	t	t	t	t
B6.180	STUD #15	ISI/UT/UT-401	BOLTING (24 TOTAL)	AUG	-	-	-	-	-	-	-
1	RC			OWN	-	-	-	-	-	-	-
				PRE	-	-	-	-	-	-	-
B-G-1	I056816	ISI/UT/UT-401	A-7	ISI	r	r	r	t	t	t	t
B6.180	STUD #16	ISI/UT/UT-401	BOLTING (24 TOTAL)	AUG	-	-	-	-	-	-	-
1	RC			OWN	-	-	-	-	-	-	-
				PRE	-	-	-	-	-	-	-
B-G-1	I056817	ISI/UT/UT-401	A-7	ISI	r	r	r	t	t	t	t
B6.180	STUD #17	ISI/UT/UT-401	BOLTING (24 TOTAL)	AUG	-	-	-	-	-	-	-
1	RC			OWN	-	-	-	-	-	-	-
				PRE	-	-	-	-	-	-	-
B-G-1	I056818	ISI/UT/UT-401	A-7	ISI	r	r	r	t	t	t	t
B6.180	STUD #18	ISI/UT/UT-401	BOLTING (24 TOTAL)	AUG	-	-	-	-	-	-	-
1	RC			OWN	-	-	-	-	-	-	-
				PRE	-	-	-	-	-	-	-
B-G-1	I056819	ISI/UT/UT-401	A-7	ISI	r	r	r	t	t	t	t
B6.180	STUD #19	ISI/UT/UT-401	BOLTING (24 TOTAL)	AUG	-	-	-	-	-	-	-
1	RC			OWN	-	-	-	-	-	-	-
				PRE	-	-	-	-	-	-	-
B-G-1	I056820	ISI/UT/UT-401	A-7	ISI	r	r	r	t	t	t	t
B6.180	STUD #20	ISI/UT/UT-401	BOLTING (24 TOTAL)	AUG	-	-	-	-	-	-	-
1	RC			OWN	-	-	-	-	-	-	-
				PRE	-	-	-	-	-	-	-

Category, ItemNO, Class	Summary / CompID / System	Scope / Method / Procedure	Iso No. Comp. Desc. Code Case		Period 1 00	Period 1 02	Period 2 03	Period 2 05	Period 2 06	Period 3 08	Period 3 09
B-G-1	I056821	ISI/UT/UT-401	A-7	ISI	r	r	r	t	t	t	t
B6.180	STUD #21	ISI/UT/UT-401	BOLTING (24 TOTAL)	AUG	-	-	-	-	-	-	-
1	RC			OWN	-	-	-	-	-	-	-
				PRE	-	-	-	-	-	-	-
B-G-1	I056822	ISI/UT/UT-401	A-7	ISI	r	r	r	t	t	t	t
B6.180	STUD #22	ISI/UT/UT-401	BOLTING (24 TOTAL)	AUG	-	-	-	-	-	-	-
1	RC			OWN	-	-	-	-	-	-	-
				PRE	-	-	-	-	-	-	-
B-G-1	I056823	ISI/UT/UT-401	A-7	ISI	r	r	r	t	t	t	t
B6.180	STUD #23	ISI/UT/UT-401	BOLTING (24 TOTAL)	AUG	-	-	-	-	-	-	-
1	RC			OWN	-	-	-	-	-	-	-
				PRE	-	-	-	-	-	-	-
B-G-1	I056824	ISI/UT/UT-401	A-7	ISI	r	r	r	t	t	t	t
B6.180	STUD #24	ISI/UT/UT-401	BOLTING (24 TOTAL)	AUG	-	-	-	-	-	-	-
1	RC			OWN	-	-	-	-	-	-	-
				PRE	-	-	-	-	-	-	-
B-G-1	I057701	ISI/UT/UT-401	A-7	ISI	r	r	r	t	t	t	s
B6.180	STUD #1	ISI/UT/UT-401	BOLTING (24 TOTAL)	AUG	-	-	-	-	-	-	-
1	RC			OWN	-	-	-	-	-	-	-
				PRE	-	-	-	-	-	-	-
B-G-1	I057702	ISI/UT/UT-401	A-7	ISI	r	r	r	t	t	t	s
B6.180	STUD #2	ISI/UT/UT-401	BOLTING (24 TOTAL)	AUG	-	-	-	-	-	-	-
1	RC			OWN	-	-	-	-	-	-	-
				PRE	-	-	-	-	-	-	-
B-G-1	I057703	ISI/UT/UT-401	A-7	ISI	r	r	r	t	t	t	s
B6.180	STUD #3	ISI/UT/UT-401	BOLTING (24 TOTAL)	AUG	-	-	-	-	-	-	-
1	RC			OWN	-	-	-	-	-	-	-
				PRE	-	-	-	-	-	-	-
B-G-1	I057704	ISI/UT/UT-401	A-7	ISI	r	r	r	t	t	t	s
B6.180	STUD #4	ISI/UT/UT-401	BOLTING (24 TOTAL)	AUG	-	-	-	-	-	-	-
1	RC			OWN	-	-	-	-	-	-	-
				PRE	-	-	-	-	-	-	-
B-G-1	I057705	ISI/UT/UT-401	A-7	ISI	r	r	r	t	t	t	s
B6.180	STUD #5	ISI/UT/UT-401	BOLTING (24 TOTAL)	AUG	-	-	-	-	-	-	-
1	RC			OWN	-	-	-	-	-	-	-
				PRE	-	-	-	-	-	-	-
B-G-1	I057706	ISI/UT/UT-401	A-7	ISI	r	r	r	t	t	t	s
B6.180	STUD #6	ISI/UT/UT-401	BOLTING (24 TOTAL)	AUG	-	-	-	-	-	-	-
1	RC			OWN	-	-	-	-	-	-	-
				PRE	-	-	-	-	-	-	-

Category, ItemNO, Class	Summary / CompID / System	Scope / Method / Procedure	Iso No. Comp. Desc. Code Case		Period 1 00	Period 1 02	Period 2 03	Period 2 05	Period 2 06	Period 3 08	Period 3 09
B-G-1	I057707	ISI/UT/UT-401	A-7	ISI	r	r	r	t	t	t	s
B6.180	STUD #7	ISI/UT/UT-401	BOLTING (24 TOTAL)	AUG	-	-	-	-	-	-	-
1	RC			OWN	-	-	-	-	-	-	-
				PRE	-	-	-	-	-	-	-
B-G-1	I057708	ISI/UT/UT-401	A-7	ISI	r	r	r	t	t	t	s
B6.180	STUD #8	ISI/UT/UT-401	BOLTING (24 TOTAL)	AUG	-	-	-	-	-	-	-
1	RC			OWN	-	-	-	-	-	-	-
				PRE	-	-	-	-	-	-	-
B-G-1	I057709	ISI/UT/UT-401	A-7	ISI	r	r	r	t	t	t	s
B6.180	STUD #9	ISI/UT/UT-401	BOLTING (24 TOTAL)	AUG	-	-	-	-	-	-	-
1	RC			OWN	-	-	-	-	-	-	-
				PRE	-	-	-	-	-	-	-
B-G-1	I057710	ISI/UT/UT-401	A-7	ISI	r	r	r	t	t	t	s
B6.180	STUD #10	ISI/UT/UT-401	BOLTING (24 TOTAL)	AUG	-	-	-	-	-	-	-
1	RC			OWN	-	-	-	-	-	-	-
				PRE	-	-	-	-	-	-	-
B-G-1	I057711	ISI/UT/UT-401	A-7	ISI	r	r	r	t	t	t	s
B6.180	STUD #11	ISI/UT/UT-401	BOLTING (24 TOTAL)	AUG	-	-	-	-	-	-	-
1	RC			OWN	-	-	-	-	-	-	-
				PRE	-	-	-	-	-	-	-
B-G-1	I057712	ISI/UT/UT-401	A-7	ISI	r	r	r	t	t	t	s
B6.180	STUD #12	ISI/UT/UT-401	BOLTING (24 TOTAL)	AUG	-	-	-	-	-	-	-
1	RC			OWN	-	-	-	-	-	-	-
				PRE	-	-	-	-	-	-	-
B-G-1	I057713	ISI/UT/UT-401	A-7	ISI	r	r	r	t	t	t	s
B6.180	STUD #13	ISI/UT/UT-401	BOLTING (24 TOTAL)	AUG	-	-	-	-	-	-	-
1	RC			OWN	-	-	-	-	-	-	-
				PRE	-	-	-	-	-	-	-
B-G-1	I057714	ISI/UT/UT-401	A-7	ISI	r	r	r	t	t	t	s
B6.180	STUD #14	ISI/UT/UT-401	BOLTING (24 TOTAL)	AUG	-	-	-	-	-	-	-
1	RC			OWN	-	-	-	-	-	-	-
				PRE	-	-	-	-	-	-	-
B-G-1	I057715	ISI/UT/UT-401	A-7	ISI	r	r	r	t	t	t	s
B6.180	STUD #15	ISI/UT/UT-401	BOLTING (24 TOTAL)	AUG	-	-	-	-	-	-	-
1	RC			OWN	-	-	-	-	-	-	-
				PRE	-	-	-	-	-	-	-
B-G-1	I057716	ISI/UT/UT-401	A-7	ISI	r	r	r	t	t	t	s
B6.180	STUD #16	ISI/UT/UT-401	BOLTING (24 TOTAL)	AUG	-	-	-	-	-	-	-
1	RC			OWN	-	-	-	-	-	-	-
				PRE	-	-	-	-	-	-	-

Category, ItemNO, Class	Summary / CompID / System	Scope / Method / Procedure	Iso No. Comp. Desc. Code Case		Period 1 00	Period 1 02	Period 2 03	Period 2 05	Period 2 06	Period 3 08	Period 3 09
B-G-1	I057717	ISI/UT/UT-401	A-7	ISI	r	r	r	t	t	t	s
B6.180	STUD #17	ISI/UT/UT-401	BOLTING (24 TOTAL)	AUG	-	-	-	-	-	-	-
1	RC			OWN	-	-	-	-	-	-	-
				PRE	-	-	-	-	-	-	-
B-G-1	I057718	ISI/UT/UT-401	A-7	ISI	r	r	r	t	t	t	s
B6.180	STUD #18	ISI/UT/UT-401	BOLTING (24 TOTAL)	AUG	-	-	-	-	-	-	-
1	RC			OWN	-	-	-	-	-	-	-
				PRE	-	-	-	-	-	-	-
B-G-1	I057719	ISI/UT/UT-401	A-7	ISI	r	r	r	t	t	t	s
B6.180	STUD #19	ISI/UT/UT-401	BOLTING (24 TOTAL)	AUG	-	-	-	-	-	-	-
1	RC			OWN	-	-	-	-	-	-	-
				PRE	-	-	-	-	-	-	-
B-G-1	I057720	ISI/UT/UT-401	A-7	ISI	r	r	r	t	t	t	s
B6.180	STUD #20	ISI/UT/UT-401	BOLTING (24 TOTAL)	AUG	-	-	-	-	-	-	-
1	RC			OWN	-	-	-	-	-	-	-
				PRE	-	-	-	-	-	-	-
B-G-1	I057721	ISI/UT/UT-401	A-7	ISI	r	r	r	t	t	t	s
B6.180	STUD #21	ISI/UT/UT-401	BOLTING (24 TOTAL)	AUG	-	-	-	-	-	-	-
1	RC			OWN	-	-	-	-	-	-	-
				PRE	-	-	-	-	-	-	-
B-G-1	I057722	ISI/UT/UT-401	A-7	ISI	r	r	r	t	t	t	s
B6.180	STUD #22	ISI/UT/UT-401	BOLTING (24 TOTAL)	AUG	-	-	-	-	-	-	-
1	RC			OWN	-	-	-	-	-	-	-
				PRE	-	-	-	-	-	-	-
B-G-1	I057723	ISI/UT/UT-401	A-7	ISI	r	r	r	t	t	t	s
B6.180	STUD #23	ISI/UT/UT-401	BOLTING (24 TOTAL)	AUG	-	-	-	-	-	-	-
1	RC			OWN	-	-	-	-	-	-	-
				PRE	-	-	-	-	-	-	-
B-G-1	I057724	ISI/UT/UT-401	A-7	ISI	r	r	r	t	t	t	s
B6.180	STUD #24	ISI/UT/UT-401	BOLTING (24 TOTAL)	AUG	-	-	-	-	-	-	-
1	RC			OWN	-	-	-	-	-	-	-
				PRE	-	-	-	-	-	-	-
B-G-1	I056545	ISI/VT/VT-105	A-7	ISI	r	r	r	t	t	t	t
B6.190	RCP-A (FLANGE)	ISI/VT/VT-105	PUMP FLANGE SURFACE	AUG	-	-	-	-	-	-	-
1	RC			OWN	-	-	-	-	-	-	-
				PRE	-	-	-	-	-	-	-
B-G-1	I057445	ISI/VT/VT-105	A-7	ISI	r	r	r	t	t	t	t
B6.190	RCP-B (FLANGE)	ISI/VT/VT-105	PUMP FLANGE SURFACE	AUG	-	-	-	-	-	-	-
1	RC			OWN	-	-	-	-	-	-	-
				PRE	-	-	-	-	-	-	-

Category, ItemNO, Class	Summary / CompID / System	Scope / Method / Procedure	Iso No. Comp. Desc. Code Case		Period 1 00	Period 1 02	Period 2 03	Period 2 05	Period 2 06	Period 3 08	Period 3 09
B-G-1	I056701	ISI/VT/VT-108	A-7	ISI	r	r	r	t	t	t	t
B6.200	NUT #1	ISI/VT/VT-108	BOLTING (24 TOTAL)	AUG	-	-	-	-	-	-	-
1	RC			OWN	-	-	-	-	-	-	-
				PRE	-	-	-	-	-	-	-
B-G-1	I056702	ISI/VT/VT-108	A-7	ISI	r	r	r	t	t	t	t
B6.200	NUT #2	ISI/VT/VT-108	BOLTING (24 TOTAL)	AUG	-	-	-	-	-	-	-
1	RC			OWN	-	-	-	-	-	-	-
				PRE	-	-	-	-	-	-	-
B-G-1	I056703	ISI/VT/VT-108	A-7	ISI	r	r	r	t	t	t	t
B6.200	NUT #3	ISI/VT/VT-108	BOLTING (24 TOTAL)	AUG	-	-	-	-	-	-	-
1	RC			OWN	-	-	-	-	-	-	-
				PRE	-	-	-	-	-	-	-
B-G-1	I056704	ISI/VT/VT-108	A-7	ISI	r	r	r	t	t	t	t
B6.200	NUT #4	ISI/VT/VT-108	BOLTING (24 TOTAL)	AUG	-	-	-	-	-	-	-
1	RC			OWN	-	-	-	-	-	-	-
				PRE	-	-	-	-	-	-	-
B-G-1	I056705	ISI/VT/VT-108	A-7	ISI	r	r	r	t	t	t	t
B6.200	NUT #5	ISI/VT/VT-108	BOLTING (24 TOTAL)	AUG	-	-	-	-	-	-	-
1	RC			OWN	-	-	-	-	-	-	-
				PRE	-	-	-	-	-	-	-
B-G-1	I056706	ISI/VT/VT-108	A-7	ISI	r	r	r	t	t	t	t
B6.200	NUT #6	ISI/VT/VT-108	BOLTING (24 TOTAL)	AUG	-	-	-	-	-	-	-
1	RC			OWN	-	-	-	-	-	-	-
				PRE	-	-	-	-	-	-	-
B-G-1	I056707	ISI/VT/VT-108	A-7	ISI	r	r	r	t	t	t	t
B6.200	NUT #7	ISI/VT/VT-108	BOLTING (24 TOTAL)	AUG	-	-	-	-	-	-	-
1	RC			OWN	-	-	-	-	-	-	-
				PRE	-	-	-	-	-	-	-
B-G-1	I056708	ISI/VT/VT-108	A-7	ISI	r	r	r	t	t	t	t
B6.200	NUT #8	ISI/VT/VT-108	BOLTING (24 TOTAL)	AUG	-	-	-	-	-	-	-
1	RC			OWN	-	-	-	-	-	-	-
				PRE	-	-	-	-	-	-	-
B-G-1	I056709	ISI/VT/VT-108	A-7	ISI	r	r	r	t	t	t	t
B6.200	NUT #9	ISI/VT/VT-108	BOLTING (24 TOTAL)	AUG	-	-	-	-	-	-	-
1	RC			OWN	-	-	-	-	-	-	-
				PRE	-	-	-	-	-	-	-
B-G-1	I056710	ISI/VT/VT-108	A-7	ISI	r	r	r	t	t	t	t
B6.200	NUT #10	ISI/VT/VT-108	BOLTING (24 TOTAL)	AUG	-	-	-	-	-	-	-
1	RC			OWN	-	-	-	-	-	-	-
				PRE	-	-	-	-	-	-	-

Category, ItemNO, Class	Summary / CompID / System	Scope / Method / Procedure	Iso No. Comp. Desc. Code Case		Period 1 00	Period 1 02	Period 2 03	Period 2 05	Period 2 06	Period 3 08	Period 3 09
B-G-1	I056711	ISI/VT/VT-108	A-7	ISI	r	r	r	t	t	t	t
B6.200	NUT #11	ISI/VT/VT-108	BOLTING (24 TOTAL)	AUG	-	-	-	-	-	-	-
1	RC			OWN	-	-	-	-	-	-	-
				PRE	-	-	-	-	-	-	-
B-G-1	I056712	ISI/VT/VT-108	A-7	ISI	r	r	r	t	t	t	t
B6.200	NUT #12	ISI/VT/VT-108	BOLTING (24 TOTAL)	AUG	-	-	-	-	-	-	-
1	RC			OWN	-	-	-	-	-	-	-
				PRE	-	-	-	-	-	-	-
B-G-1	I056713	ISI/VT/VT-108	A-7	ISI	r	r	r	t	t	t	t
B6.200	NUT #13	ISI/VT/VT-108	BOLTING (24 TOTAL)	AUG	-	-	-	-	-	-	-
1	RC			OWN	-	-	-	-	-	-	-
				PRE	-	-	-	-	-	-	-
B-G-1	I056714	ISI/VT/VT-108	A-7	ISI	r	r	r	t	t	t	t
B6.200	NUT #14	ISI/VT/VT-108	BOLTING (24 TOTAL)	AUG	-	-	-	-	-	-	-
1	RC			OWN	-	-	-	-	-	-	-
				PRE	-	-	-	-	-	-	-
B-G-1	I056715	ISI/VT/VT-108	A-7	ISI	r	r	r	t	t	t	t
B6.200	NUT #15	ISI/VT/VT-108	BOLTING (24 TOTAL)	AUG	-	-	-	-	-	-	-
1	RC			OWN	-	-	-	-	-	-	-
				PRE	-	-	-	-	-	-	-
B-G-1	I056716	ISI/VT/VT-108	A-7	ISI	r	r	r	t	t	t	t
B6.200	NUT #16	ISI/VT/VT-108	BOLTING (24 TOTAL)	AUG	-	-	-	-	-	-	-
1	RC			OWN	-	-	-	-	-	-	-
				PRE	-	-	-	-	-	-	-
B-G-1	I056717	ISI/VT/VT-108	A-7	ISI	r	r	r	t	t	t	t
B6.200	NUT #17	ISI/VT/VT-108	BOLTING (24 TOTAL)	AUG	-	-	-	-	-	-	-
1	RC			OWN	-	-	-	-	-	-	-
				PRE	-	-	-	-	-	-	-
B-G-1	I056718	ISI/VT/VT-108	A-7	ISI	r	r	r	t	t	t	t
B6.200	NUT #18	ISI/VT/VT-108	BOLTING (24 TOTAL)	AUG	-	-	-	-	-	-	-
1	RC			OWN	-	-	-	-	-	-	-
				PRE	-	-	-	-	-	-	-
B-G-1	I056719	ISI/VT/VT-108	A-7	ISI	r	r	r	t	t	t	t
B6.200	NUT #19	ISI/VT/VT-108	BOLTING (24 TOTAL)	AUG	-	-	-	-	-	-	-
1	RC			OWN	-	-	-	-	-	-	-
				PRE	-	-	-	-	-	-	-
B-G-1	I056720	ISI/VT/VT-108	A-7	ISI	r	r	r	t	t	t	t
B6.200	NUT #20	ISI/VT/VT-108	BOLTING (24 TOTAL)	AUG	-	-	-	-	-	-	-
1	RC			OWN	-	-	-	-	-	-	-
				PRE	-	-	-	-	-	-	-

Category, ItemNO, Class	Summary / CompID / System	Scope / Method / Procedure	Iso No. Comp. Desc. Code Case		Period 1 00	Period 1 02	Period 2 03	Period 2 05	Period 2 06	Period 3 08	Period 3 09
B-G-1	I056721	ISI/VT/VT-108	A-7	ISI	r	r	r	t	t	t	t
B6.200	NUT #21	ISI/VT/VT-108	BOLTING (24 TOTAL)	AUG	-	-	-	-	-	-	-
1	RC			OWN	-	-	-	-	-	-	-
				PRE	-	-	-	-	-	-	-
B-G-1	I056722	ISI/VT/VT-108	A-7	ISI	r	r	r	t	t	t	t
B6.200	NUT #22	ISI/VT/VT-108	BOLTING (24 TOTAL)	AUG	-	-	-	-	-	-	-
1	RC			OWN	-	-	-	-	-	-	-
				PRE	-	-	-	-	-	-	-
B-G-1	I056723	ISI/VT/VT-108	A-7	ISI	r	r	r	t	t	t	t
B6.200	NUT #23	ISI/VT/VT-108	BOLTING (24 TOTAL)	AUG	-	-	-	-	-	-	-
1	RC			OWN	-	-	-	-	-	-	-
				PRE	-	-	-	-	-	-	-
B-G-1	I056724	ISI/VT/VT-108	A-7	ISI	r	r	r	t	t	t	t
B6.200	NUT #24	ISI/VT/VT-108	BOLTING (24 TOTAL)	AUG	-	-	-	-	-	-	-
1	RC			OWN	-	-	-	-	-	-	-
				PRE	-	-	-	-	-	-	-
B-G-1	I057601	ISI/VT/VT-108	A-7	ISI	r	r	r	t	t	t	s
B6.200	NUT #1	ISI/VT/VT-108	BOLTING (24 TOTAL)	AUG	-	-	-	-	-	-	-
1	RC			OWN	-	-	-	-	-	-	-
				PRE	-	-	-	-	-	-	-
B-G-1	I057602	ISI/VT/VT-108	A-7	ISI	r	r	r	t	t	t	s
B6.200	NUT #2	ISI/VT/VT-108	BOLTING (24 TOTAL)	AUG	-	-	-	-	-	-	-
1	RC			OWN	-	-	-	-	-	-	-
				PRE	-	-	-	-	-	-	-
B-G-1	I057603	ISI/VT/VT-108	A-7	ISI	r	r	r	t	t	t	s
B6.200	NUT #3	ISI/VT/VT-108	BOLTING (24 TOTAL)	AUG	-	-	-	-	-	-	-
1	RC			OWN	-	-	-	-	-	-	-
				PRE	-	-	-	-	-	-	-
B-G-1	I057604	ISI/VT/VT-108	A-7	ISI	r	r	r	t	t	t	s
B6.200	NUT #4	ISI/VT/VT-108	BOLTING (24 TOTAL)	AUG	-	-	-	-	-	-	-
1	RC			OWN	-	-	-	-	-	-	-
				PRE	-	-	-	-	-	-	-
B-G-1	I057605	ISI/VT/VT-108	A-7	ISI	r	r	r	t	t	t	s
B6.200	NUT #5	ISI/VT/VT-108	BOLTING (24 TOTAL)	AUG	-	-	-	-	-	-	-
1	RC			OWN	-	-	-	-	-	-	-
				PRE	-	-	-	-	-	-	-
B-G-1	I057606	ISI/VT/VT-108	A-7	ISI	r	r	r	t	t	t	s
B6.200	NUT #6	ISI/VT/VT-108	BOLTING (24 TOTAL)	AUG	-	-	-	-	-	-	-
1	RC			OWN	-	-	-	-	-	-	-
				PRE	-	-	-	-	-	-	-

Category, ItemNO, Class	Summary / CompID / System	Scope / Method / Procedure	Iso No. Comp. Desc. Code Case		Period 1 00	Period 1 02	Period 2 03	Period 2 05	Period 2 06	Period 3 08	Period 3 09
B-G-1	I057607	ISI/VT/VT-108	A-7	ISI	r	r	r	t	t	t	s
B6.200	NUT #7	ISI/VT/VT-108	BOLTING (24 TOTAL)	AUG	-	-	-	-	-	-	-
1	RC			OWN	-	-	-	-	-	-	-
				PRE	-	-	-	-	-	-	-
B-G-1	I057608	ISI/VT/VT-108	A-7	ISI	r	r	r	t	t	t	s
B6.200	NUT #8	ISI/VT/VT-108	BOLTING (24 TOTAL)	AUG	-	-	-	-	-	-	-
1	RC			OWN	-	-	-	-	-	-	-
				PRE	-	-	-	-	-	-	-
B-G-1	I057609	ISI/VT/VT-108	A-7	ISI	r	r	r	t	t	t	s
B6.200	NUT #9	ISI/VT/VT-108	BOLTING (24 TOTAL)	AUG	-	-	-	-	-	-	-
1	RC			OWN	-	-	-	-	-	-	-
				PRE	-	-	-	-	-	-	-
B-G-1	I057610	ISI/VT/VT-108	A-7	ISI	r	r	r	t	t	t	s
B6.200	NUT #10	ISI/VT/VT-108	BOLTING (24 TOTAL)	AUG	-	-	-	-	-	-	-
1	RC			OWN	-	-	-	-	-	-	-
				PRE	-	-	-	-	-	-	-
B-G-1	I057611	ISI/VT/VT-108	A-7	ISI	r	r	r	t	t	t	s
B6.200	NUT #11	ISI/VT/VT-108	BOLTING (24 TOTAL)	AUG	-	-	-	-	-	-	-
1	RC			OWN	-	-	-	-	-	-	-
				PRE	-	-	-	-	-	-	-
B-G-1	I057612	ISI/VT/VT-108	A-7	ISI	r	r	r	t	t	t	s
B6.200	NUT #12	ISI/VT/VT-108	BOLTING (24 TOTAL)	AUG	-	-	-	-	-	-	-
1	RC			OWN	-	-	-	-	-	-	-
				PRE	-	-	-	-	-	-	-
B-G-1	I057613	ISI/VT/VT-108	A-7	ISI	r	r	r	t	t	t	s
B6.200	NUT #13	ISI/VT/VT-108	BOLTING (24 TOTAL)	AUG	-	-	-	-	-	-	-
1	RC			OWN	-	-	-	-	-	-	-
				PRE	-	-	-	-	-	-	-
B-G-1	I057614	ISI/VT/VT-108	A-7	ISI	r	r	r	t	t	t	s
B6.200	NUT #14	ISI/VT/VT-108	BOLTING (24 TOTAL)	AUG	-	-	-	-	-	-	-
1	RC			OWN	-	-	-	-	-	-	-
				PRE	-	-	-	-	-	-	-
B-G-1	I057615	ISI/VT/VT-108	A-7	ISI	r	r	r	t	t	t	s
B6.200	NUT #15	ISI/VT/VT-108	BOLTING (24 TOTAL)	AUG	-	-	-	-	-	-	-
1	RC			OWN	-	-	-	-	-	-	-
				PRE	-	-	-	-	-	-	-
B-G-1	I057616	ISI/VT/VT-108	A-7	ISI	r	r	r	t	t	t	s
B6.200	NUT #16	ISI/VT/VT-108	BOLTING (24 TOTAL)	AUG	-	-	-	-	-	-	-
1	RC			OWN	-	-	-	-	-	-	-
				PRE	-	-	-	-	-	-	-

Category, ItemNO, Class	Summary / CompID / System	Scope / Method / Procedure	Iso No. Comp. Desc. Code Case		Period 1 00	Period 1 02	Period 2 03	Period 2 05	Period 2 06	Period 3 08	Period 3 09
B-G-1	I057617	ISI/VT/VT-108	A-7	ISI	r	r	r	t	t	t	s
B6.200	NUT #17	ISI/VT/VT-108	BOLTING (24 TOTAL)	AUG	-	-	-	-	-	-	-
1	RC			OWN	-	-	-	-	-	-	-
				PRE	-	-	-	-	-	-	-
B-G-1	I057618	ISI/VT/VT-108	A-7	ISI	r	r	r	t	t	t	s
B6.200	NUT #18	ISI/VT/VT-108	BOLTING (24 TOTAL)	AUG	-	-	-	-	-	-	-
1	RC			OWN	-	-	-	-	-	-	-
				PRE	-	-	-	-	-	-	-
B-G-1	I057619	ISI/VT/VT-108	A-7	ISI	r	r	r	t	t	t	s
B6.200	NUT #19	ISI/VT/VT-108	BOLTING (24 TOTAL)	AUG	-	-	-	-	-	-	-
1	RC			OWN	-	-	-	-	-	-	-
				PRE	-	-	-	-	-	-	-
B-G-1	I057620	ISI/VT/VT-108	A-7	ISI	r	r	r	t	t	t	s
B6.200	NUT #20	ISI/VT/VT-108	BOLTING (24 TOTAL)	AUG	-	-	-	-	-	-	-
1	RC			OWN	-	-	-	-	-	-	-
				PRE	-	-	-	-	-	-	-
B-G-1	I057621	ISI/VT/VT-108	A-7	ISI	r	r	r	t	t	t	s
B6.200	NUT #21	ISI/VT/VT-108	BOLTING (24 TOTAL)	AUG	-	-	-	-	-	-	-
1	RC			OWN	-	-	-	-	-	-	-
				PRE	-	-	-	-	-	-	-
B-G-1	I057622	ISI/VT/VT-108	A-7	ISI	r	r	r	t	t	t	s
B6.200	NUT #22	ISI/VT/VT-108	BOLTING (24 TOTAL)	AUG	-	-	-	-	-	-	-
1	RC			OWN	-	-	-	-	-	-	-
				PRE	-	-	-	-	-	-	-
B-G-1	I057623	ISI/VT/VT-108	A-7	ISI	r	r	r	t	t	t	s
B6.200	NUT #23	ISI/VT/VT-109	BOLTING (24 TOTAL)	AUG	-	-	-	-	-	-	-
1	RC			OWN	-	-	-	-	-	-	-
				PRE	-	-	-	-	-	-	-
B-G-1	I057624	ISI/VT/VT-108	A-7	ISI	r	r	r	t	t	t	s
B6.200	NUT #24	ISI/VT/VT-108	BOLTING (24 TOTAL)	AUG	-	-	-	-	-	-	-
1	RC			OWN	-	-	-	-	-	-	-
				PRE	-	-	-	-	-	-	-
B-G-1	I001101	ISI/MT/MT-105	A-1	ISI	-	-	-	-	-	-	s
B6.30	STUD #1	ISI/UT/UT-401	CLOSURE STUD,REMOVED(48TOT)	AUG	-	-	-	-	-	-	-
1	RPV			OWN	-	-	-	-	-	-	-
				PRE	-	-	-	-	-	-	-
B-G-1	I001102	ISI/MT/MT-105	A-1	ISI	-	-	-	-	-	-	s
B6.30	STUD #2	ISI/UT/UT-401	CLOSURE STUD,REMOVED(48TOT)	AUG	-	-	-	-	-	-	-
1	RPV			OWN	-	-	-	-	-	-	-
				PRE	-	-	-	-	-	-	-

Category, ItemNO, Class	Summary / CompID / System	Scope / Method / Procedure	Iso No. Comp. Desc. Code Case		Period 1 00	Period 1 02	Period 2 03	Period 2 05	Period 2 06	Period 3 08	Period 3 09
B-G-1	I001103	ISI/MT/MT-105	A-1	ISI	-	-	-	-	-	-	s
B6.30	STUD #3	ISI/UT/UT-401	CLOSURE STUD,REMOVED(48TOT)	AUG	-	-	-	-	-	-	-
1	RPV			OWN	-	-	-	-	-	-	-
				PRE	-	-	-	-	-	-	-
B-G-1	I001104	ISI/MT/MT-105	A-1	ISI	-	-	-	-	-	-	s
B6.30	STUD #4	ISI/UT/UT-401	CLOSURE STUD,REMOVED(48TOT)	AUG	-	-	-	-	-	-	-
1	RPV			OWN	-	-	-	-	-	-	-
				PRE	-	-	-	-	-	-	-
B-G-1	I001105	ISI/MT/MT-105	A-1	ISI	-	-	-	-	-	-	s
B6.30	STUD #5	ISI/UT/UT-401	CLOSURE STUD,REMOVED(48TOT)	AUG	-	-	-	-	-	-	-
1	RPV			OWN	-	-	-	-	-	-	-
				PRE	-	-	-	-	-	-	-
B-G-1	I001106	ISI/MT/MT-105	A-1	ISI	-	-	-	-	-	-	s
B6.30	STUD #6	ISI/UT/UT-401	CLOSURE STUD,REMOVED(48TOT)	AUG	-	-	-	-	-	-	-
1	RPV			OWN	-	-	-	-	-	-	-
				PRE	-	-	-	-	-	-	-
B-G-1	I001107	ISI/MT/MT-105	A-1	ISI	-	-	-	-	-	-	s
B6.30	STUD #7	ISI/UT/UT-401	CLOSURE STUD,REMOVED(48TOT)	AUG	-	-	-	-	-	-	-
1	RPV			OWN	-	-	-	-	-	-	-
				PRE	-	-	-	-	-	-	-
B-G-1	I001108	ISI/MT/MT-105	A-1	ISI	-	-	-	-	-	-	s
B6.30	STUD #8	ISI/UT/UT-401	CLOSURE STUD,REMOVED(48TOT)	AUG	-	-	-	-	-	-	-
1	RPV			OWN	-	-	-	-	-	-	-
				PRE	-	-	-	-	-	-	-
B-G-1	I001109	ISI/MT/MT-105	A-1	ISI	-	-	-	-	-	-	s
B6.30	STUD #9	ISI/UT/UT-401	CLOSURE STUD,REMOVED(48TOT)	AUG	-	-	-	-	-	-	-
1	RPV			OWN	-	-	-	-	-	-	-
				PRE	-	-	-	-	-	-	-
B-G-1	I001110	ISI/MT/MT-105	A-1	ISI	-	-	-	-	-	-	s
B6.30	STUD #10	ISI/UT/UT-401	CLOSURE STUD,REMOVED(48TOT)	AUG	-	-	-	-	-	-	-
1	RPV			OWN	-	-	-	-	-	-	-
				PRE	-	-	-	-	-	-	-
B-G-1	I001111	ISI/MT/MT-105	A-1	ISI	-	-	-	-	-	-	s
B6.30	STUD #11	ISI/UT/UT-401	CLOSURE STUD,REMOVED(48TOT)	AUG	-	-	-	-	-	-	-
1	RPV			OWN	-	-	-	-	-	-	-
				PRE	-	-	-	-	-	-	-
B-G-1	I001112	ISI/MT/MT-105	A-1	ISI	-	-	-	-	-	-	s
B6.30	STUD #12	ISI/UT/UT-401	CLOSURE STUD,REMOVED(48TOT)	AUG	-	-	-	-	-	-	-
1	RPV			OWN	-	-	-	-	-	-	-
				PRE	-	-	-	-	-	-	-

Category, ItemNO, Class	Summary / CompID / System	Scope / Method / Procedure	Iso No. Comp. Desc. Code Case		Period 1 00	Period 1 02	Period 2 03	Period 2 05	Period 2 06	Period 3 08	Period 3 09
B-G-1	I001113	ISI/MT/MT-105	A-1	ISI	-	-	-	-	-	-	s
B6.30	STUD #13	ISI/UT/UT-401	CLOSURE STUD,REMOVED(48TOT)	AUG	-	-	-	-	-	-	-
1	RPV			OWN	-	-	-	-	-	-	-
				PRE	-	-	-	-	-	-	-
B-G-1	I001114	ISI/MT/MT-105	A-1	ISI	-	-	-	-	-	-	s
B6.30	STUD #14	ISI/UT/UT-401	CLOSURE STUD,REMOVED(48TOT)	AUG	-	-	-	-	-	-	-
1	RPV			OWN	-	-	-	-	-	-	-
				PRE	-	-	-	-	-	-	-
B-G-1	I001115	ISI/MT/MT-105	A-1	ISI	-	-	-	-	-	-	s
B6.30	STUD #15	ISI/UT/UT-401	CLOSURE STUD,REMOVED(48TOT)	AUG	-	-	-	-	-	-	-
1	RPV			OWN	-	-	-	-	-	-	-
				PRE	-	-	-	-	-	-	-
B-G-1	I001116	ISI/MT/MT-105	A-1	ISI	-	-	-	-	-	-	s
B6.30	STUD #16	ISI/UT/UT-401	CLOSURE STUD,REMOVED(48TOT)	AUG	-	-	-	-	-	-	-
1	RPV			OWN	-	-	-	-	-	-	-
				PRE	-	-	-	-	-	-	-
B-G-1	I001117	ISI/MT/MT-105	A-1	ISI	-	-	-	-	-	-	s
B6.30	STUD #17	ISI/UT/UT-401	CLOSURE STUD,REMOVED(48TOT)	AUG	-	-	-	-	-	-	-
1	RPV			OWN	-	-	-	-	-	-	-
				PRE	-	-	-	-	-	-	-
B-G-1	I001118	ISI/MT/MT-105	A-1	ISI	-	-	-	-	-	-	s
B6.30	STUD #18	ISI/UT/UT-401	CLOSURE STUD,REMOVED(48TOT)	AUG	-	-	-	-	-	-	-
1	RPV			OWN	-	-	-	-	-	-	-
				PRE	-	-	-	-	-	-	-
B-G-1	I001119	ISI/MT/MT-105	A-1	ISI	-	-	-	-	-	-	s
B6.30	STUD #19	ISI/UT/UT-401	CLOSURE STUD,REMOVED(48TOT)	AUG	-	-	-	-	-	-	-
1	RPV			OWN	-	-	-	-	-	-	-
				PRE	-	-	-	-	-	-	-
B-G-1	I001120		A-1	ISI	-	-	-	-	-	-	s
B6.30	STUD #20		CLOSURE STUD,REMOVED(48TOT)	AUG	-	-	-	-	-	-	-
1	RPV			OWN	-	-	-	-	-	-	-
				PRE	-	-	-	-	-	-	-
B-G-1	I001121	ISI/MT/MT-105	A-1	ISI	-	-	-	-	-	-	s
B6.30	STUD #21	ISI/UT/UT-401	CLOSURE STUD,REMOVED(48TOT)	AUG	-	-	-	-	-	-	-
1	RPV			OWN	-	-	-	-	-	-	-
				PRE	-	-	-	-	-	-	-
B-G-1	I001122	ISI/MT/MT-105	A-1	ISI	-	-	-	-	-	-	s
B6.30	STUD #22	ISI/UT/UT-401	CLOSURE STUD,REMOVED(48TOT)	AUG	-	-	-	-	-	-	-
1	RPV			OWN	-	-	-	-	-	-	-
				PRE	-	-	-	-	-	-	-

Category, ItemNO, Class	Summary / CompID / System	Scope / Method / Procedure	Iso No. Comp. Desc. Code Case		Period 1 00	Period 1 02	Period 2 03	Period 2 05	Period 2 06	Period 3 08	Period 3 09
B-G-1	I001123	ISI/MT/MT-105	A-1	ISI	-	-	-	-	-	-	s
B6.30	STUD #23	ISI/UT/UT-401	CLOSURE STUD,REMOVED(48TOT)	AUG	-	-	-	-	-	-	-
1	RPV			OWN	-	-	-	-	-	-	-
				PRE	-	-	-	-	-	-	-
B-G-1	I001124	ISI/MT/MT-105	A-1	ISI	-	-	-	-	-	-	s
B6.30	STUD #24	ISI/UT/UT-401	CLOSURE STUD,REMOVED(48TOT)	AUG	-	-	-	-	-	-	-
1	RPV			OWN	-	-	-	-	-	-	-
				PRE	-	-	-	-	-	-	-
B-G-1	I001125	ISI/MT/MT-105	A-1	ISI	-	-	-	-	-	-	s
B6.30	STUD #25	ISI/UT/UT-401	CLOSURE STUD,REMOVED(48TOT)	AUG	-	-	-	-	-	-	-
1	RPV			OWN	-	-	-	-	-	-	-
				PRE	-	-	-	-	-	-	-
B-G-1	I001126	ISI/MT/MT-105	A-1	ISI	-	-	-	-	-	-	s
B6.30	STUD #26	ISI/UT/UT-401	CLOSURE STUD,REMOVED(48TOT)	AUG	-	-	-	-	-	-	-
1	RPV			OWN	-	-	-	-	-	-	-
				PRE	-	-	-	-	-	-	-
B-G-1	I001127	ISI/MT/MT-105	A-1	ISI	-	-	-	-	-	-	s
B6.30	STUD #27	ISI/UT/UT-401	CLOSURE STUD,REMOVED(48TOT)	AUG	-	-	-	-	-	-	-
1	RPV			OWN	-	-	-	-	-	-	-
				PRE	-	-	-	-	-	-	-
B-G-1	I001128	ISI/MT/MT-105	A-1	ISI	-	-	-	-	-	-	s
B6.30	STUD #28	ISI/UT/UT-401	CLOSURE STUD,REMOVED(48TOT)	AUG	-	-	-	-	-	-	-
1	RPV			OWN	-	-	-	-	-	-	-
				PRE	-	-	-	-	-	-	-
B-G-1	I001129	ISI/MT/MT-105	A-1	ISI	-	-	-	-	-	-	s
B6.30	STUD #29	ISI/UT/UT-401	CLOSURE STUD,REMOVED(48TOT)	AUG	-	-	-	-	-	-	-
1	RPV			OWN	-	-	-	-	-	-	-
				PRE	-	-	-	-	-	-	-
B-G-1	I001130	ISI/MT/MT-105	A-1	ISI	-	-	-	-	-	-	s
B6.30	STUD #30	ISI/UT/UT-401	CLOSURE STUD,REMOVED(48TOT)	AUG	-	-	-	-	-	-	-
1	RPV			OWN	-	-	-	-	-	-	-
				PRE	-	-	-	-	-	-	-
B-G-1	I001131	ISI/MT/MT-105	A-1	ISI	-	-	-	-	-	-	s
B6.30	STUD #31	ISI/UT/UT-401	CLOSURE STUD,REMOVED(48TOT)	AUG	-	-	-	-	-	-	-
1	RPV			OWN	-	-	-	-	-	-	-
				PRE	-	-	-	-	-	-	-
B-G-1	I001132	ISI/MT/MT-105	A-1	ISI	-	-	-	-	-	-	s
B6.30	STUD #32	ISI/UT/UT-401	CLOSURE STUD,REMOVED(48TOT)	AUG	-	-	-	-	-	-	-
1	RPV			OWN	-	-	-	-	-	-	-
				PRE	-	-	-	-	-	-	-

Category, ItemNO, Class	Summary / CompID / System	Scope / Method / Procedure	Iso No. Comp. Desc. Code Case		Period 1 00	Period 1 02	Period 2 03	Period 2 05	Period 2 06	Period 3 08	Period 3 09
B-G-1	I001133	ISI/MT/MT-105	A-1	ISI	-	-	-	-	-	-	s
B6.30	STUD #33	ISI/UT/UT-401	CLOSURE STUD,REMOVED(48TOT)	AUG	-	-	-	-	-	-	-
1	RPV			OWN	-	-	-	-	-	-	-
				PRE	-	-	-	-	-	-	-
B-G-1	I001134	ISI/MT/MT-105	A-1	ISI	-	-	-	-	-	-	s
B6.30	STUD #34	ISI/UT/UT-401	CLOSURE STUD,REMOVED(48TOT)	AUG	-	-	-	-	-	-	-
1	RPV			OWN	-	-	-	-	-	-	-
				PRE	-	-	-	-	-	-	-
B-G-1	I001135	ISI/MT/MT-105	A-1	ISI	-	-	-	-	-	-	s
B6.30	STUD #35	ISI/UT/UT-401	CLOSURE STUD,REMOVED(48TOT)	AUG	-	-	-	-	-	-	-
1	RPV			OWN	-	-	-	-	-	-	-
				PRE	-	-	-	-	-	-	-
B-G-1	I001136	ISI/MT/MT-105	A-1	ISI	-	-	-	-	-	-	s
B6.30	STUD #36	ISI/UT/UT-401	CLOSURE STUD,REMOVED(48TOT)	AUG	-	-	-	-	-	-	-
1	RPV			OWN	-	-	-	-	-	-	-
				PRE	-	-	-	-	-	-	-
B-G-1	I001137	ISI/MT/MT-105	A-1	ISI	-	-	-	-	-	-	s
B6.30	STUD #37	ISI/UT/UT-401	CLOSURE STUD,REMOVED(48TOT)	AUG	-	-	-	-	-	-	-
1	RPV			OWN	-	-	-	-	-	-	-
				PRE	-	-	-	-	-	-	-
B-G-1	I001138	ISI/MT/MT-105	A-1	ISI	-	-	-	-	-	-	s
B6.30	STUD #38	ISI/UT/UT-401	CLOSURE STUD,REMOVED(48TOT)	AUG	-	-	-	-	-	-	-
1	RPV			OWN	-	-	-	-	-	-	-
				PRE	-	-	-	-	-	-	-
B-G-1	I001139	ISI/MT/MT-105	A-1	ISI	-	-	-	-	-	-	s
B6.30	STUD #39	ISI/UT/UT-401	CLOSURE STUD,REMOVED(48TOT)	AUG	-	-	-	-	-	-	-
1	RPV			OWN	-	-	-	-	-	-	-
				PRE	-	-	-	-	-	-	-
B-G-1	I001140	ISI/MT/MT-105	A-1	ISI	-	-	-	-	-	-	s
B6.30	STUD #40	ISI/UT/UT-401	CLOSURE STUD,REMOVED(48TOT)	AUG	-	-	-	-	-	-	-
1	RPV			OWN	-	-	-	-	-	-	-
				PRE	-	-	-	-	-	-	-
B-G-1	I001141	ISI/MT/MT-105	A-1	ISI	-	-	-	-	-	-	s
B6.30	STUD #41	ISI/UT/UT-401	CLOSURE STUD,REMOVED(48TOT)	AUG	-	-	-	-	-	-	-
1	RPV			OWN	-	-	-	-	-	-	-
				PRE	-	-	-	-	-	-	-
B-G-1	I001142	ISI/MT/MT-105	A-1	ISI	-	-	-	-	-	-	s
B6.30	STUD #42	ISI/UT/UT-401	CLOSURE STUD,REMOVED(48TOT)	AUG	-	-	-	-	-	-	-
1	RPV			OWN	-	-	-	-	-	-	-
				PRE	-	-	-	-	-	-	-

Category, ItemNO, Class	Summary / CompID / System	Scope / Method / Procedure	Iso No. Comp. Desc. Code Case		Period 1 00	Period 1 02	Period 2 03	Period 2 05	Period 2 06	Period 3 08	Period 3 09
B-G-1	I001143	ISI/MT/MT-105	A-1	ISI	-	-	-	-	-	-	s
B6.30	STUD #43	ISI/UT/UT-401	CLOSURE STUD,REMOVED(48TOT)	AUG	-	-	-	-	-	-	-
1	RPV			OWN	-	-	-	-	-	-	-
				PRE	-	-	-	-	-	-	-
B-G-1	I001144	ISI/MT/MT-105	A-1	ISI	-	-	-	-	-	-	s
B6.30	STUD #44	ISI/UT/UT-401	CLOSURE STUD,REMOVED(48TOT)	AUG	-	-	-	-	-	-	-
1	RPV			OWN	-	-	-	-	-	-	-
				PRE	-	-	-	-	-	-	-
B-G-1	I001145	ISI/MT/MT-105	A-1	ISI	-	-	-	-	-	-	s
B6.30	STUD #45	ISI/UT/UT-401	CLOSURE STUD,REMOVED(48TOT)	AUG	-	-	-	-	-	-	-
1	RPV			OWN	-	-	-	-	-	-	-
				PRE	-	-	-	-	-	-	-
B-G-1	I001146	ISI/MT/MT-105	A-1	ISI	-	-	-	-	-	-	s
B6.30	STUD #46	ISI/UT/UT-401	CLOSURE STUD,REMOVED(48TOT)	AUG	-	-	-	-	-	-	-
1	RPV			OWN	-	-	-	-	-	-	-
				PRE	-	-	-	-	-	-	-
B-G-1	I001147	ISI/MT/MT-105	A-1	ISI	-	-	-	-	-	-	s
B6.30	STUD #47	ISI/UT/UT-401	CLOSURE STUD,REMOVED(48TOT)	AUG	-	-	-	-	-	-	-
1	RPV			OWN	-	-	-	-	-	-	-
				PRE	-	-	-	-	-	-	-
B-G-1	I001148	ISI/MT/MT-105	A-1	ISI	-	-	-	-	-	-	s
B6.30	STUD #48	ISI/UT/UT-401	CLOSURE STUD,REMOVED(48TOT)	AUG	-	-	-	-	-	-	-
1	RPV			OWN	-	-	-	-	-	-	-
				PRE	-	-	-	-	-	-	-
B-G-1	I001205	ISI/UT/UT-405	A-1	ISI	-	-	-	-	-	-	s
B6.40	THREADS IN FLANGE		STUD HOLES 1 THRU 16	AUG	-	-	-	-	-	-	-
1	RPV			OWN	-	-	-	-	-	-	-
				PRE	-	-	-	-	-	-	-
B-G-1	I001206	ISI/UT/UT-405	A-1	ISI	-	-	-	-	-	-	s
B6.40	THREADS IN FLANGE		STUD HOLES 17 THRU 32	AUG	-	-	-	-	-	-	-
1	RPV			OWN	-	-	-	-	-	-	-
				PRE	-	-	-	-	-	-	-
B-G-1	I001207	ISI/UT/UT-405	A-1	ISI	-	-	-	-	-	-	s
B6.40	THREADS IN FLANGE		STUD HOLES 33 THRU 48	AUG	-	-	-	-	-	-	-
1	RPV			OWN	-	-	-	-	-	-	-
				PRE	-	-	-	-	-	-	-
B-G-1	I001301	ISI/VT/VT-108	A-1	ISI	-	-	-	-	-	-	s
B6.50	WASHER #1		CLOSURE WASHERS (48TOT)	AUG	-	-	-	-	-	-	-
1	RPV			OWN	-	-	-	-	-	-	-
				PRE	-	-	-	-	-	-	-

Category, ItemNO, Class	Summary / CompID / System	Scope / Method / Procedure	Iso No. Comp. Desc. Code Case		Period 1 00	Period 1 02	Period 2 03	Period 2 05	Period 2 06	Period 3 08	Period 3 09
B-G-1	I001302	ISI/VT/VT-108	A-1	ISI	-	-	-	-	-	-	s
B6.50	WASHER #2		CLOSURE WASHERS (48TOT)	AUG	-	-	-	-	-	-	-
1	RPV			OWN	-	-	-	-	-	-	-
				PRE	-	-	-	-	-	-	-
B-G-1	I001303	ISI/VT/VT-108	A-1	ISI	-	-	-	-	-	-	s
B6.50	WASHER #3		CLOSURE WASHERS (48TOT)	AUG	-	-	-	-	-	-	-
1	RPV			OWN	-	-	-	-	-	-	-
				PRE	-	-	-	-	-	-	-
B-G-1	I001304	ISI/VT/VT-108	A-1	ISI	-	-	-	-	-	-	s
B6.50	WASHER #4		CLOSURE WASHERS (48TOT)	AUG	-	-	-	-	-	-	-
1	RPV			OWN	-	-	-	-	-	-	-
				PRE	-	-	-	-	-	-	-
B-G-1	I001305	ISI/VT/VT-108	A-1	ISI	-	-	-	-	-	-	s
B6.50	WASHER #5		CLOSURE WASHERS (48TOT)	AUG	-	-	-	-	-	-	-
1	RPV			OWN	-	-	-	-	-	-	-
				PRE	-	-	-	-	-	-	-
B-G-1	I001306	ISI/VT/VT-108	A-1	ISI	-	-	-	-	-	-	s
B6.50	WASHER #6		CLOSURE WASHERS (48TOT)	AUG	-	-	-	-	-	-	-
1	RPV			OWN	-	-	-	-	-	-	-
				PRE	-	-	-	-	-	-	-
B-G-1	I001307	ISI/VT/VT-108	A-1	ISI	-	-	-	-	-	-	s
B6.50	WASHER #7		CLOSURE WASHERS (48TOT)	AUG	-	-	-	-	-	-	-
1	RPV			OWN	-	-	-	-	-	-	-
				PRE	-	-	-	-	-	-	-
B-G-1	I001308	ISI/VT/VT-108	A-1	ISI	-	-	-	-	-	-	s
B6.50	WASHER #8		CLOSURE WASHERS (48TOT)	AUG	-	-	-	-	-	-	-
1	RPV			OWN	-	-	-	-	-	-	-
				PRE	-	-	-	-	-	-	-
B-G-1	I001309	ISI/VT/VT-108	A-1	ISI	-	-	-	-	-	-	s
B6.50	WASHER #9		CLOSURE WASHERS (48TOT)	AUG	-	-	-	-	-	-	-
1	RPV			OWN	-	-	-	-	-	-	-
				PRE	-	-	-	-	-	-	-
B-G-1	I001310	ISI/VT/VT-108	A-1	ISI	-	-	-	-	-	-	s
B6.50	WASHER #10		CLOSURE WASHERS (48TOT)	AUG	-	-	-	-	-	-	-
1	RPV			OWN	-	-	-	-	-	-	-
				PRE	-	-	-	-	-	-	-
B-G-1	I001311	ISI/VT/VT-108	A-1	ISI	-	-	-	-	-	-	s
B6.50	WASHER #11		CLOSURE WASHERS (48TOT)	AUG	-	-	-	-	-	-	-
1	RPV			OWN	-	-	-	-	-	-	-
				PRE	-	-	-	-	-	-	-

Category, ItemNO, Class	Summary / CompID / System	Scope / Method / Procedure	Iso No. Comp. Desc. Code Case		Period 1 00	Period 1 02	Period 2 03	Period 2 05	Period 2 06	Period 3 08	Period 3 09
B-G-1	I001312	ISI/VT/VT-108	A-1	ISI	-	-	-	-	-	-	s
B6.50	WASHER #12		CLOSURE WASHERS (48TOT)	AUG	-	-	-	-	-	-	-
1	RPV			OWN	-	-	-	-	-	-	-
				PRE	-	-	-	-	-	-	-
B-G-1	I001313	ISI/VT/VT-108	A-1	ISI	-	-	-	-	-	-	s
B6.50	WASHER #13		CLOSURE WASHERS (48TOT)	AUG	-	-	-	-	-	-	-
1	RPV			OWN	-	-	-	-	-	-	-
				PRE	-	-	-	-	-	-	-
B-G-1	I001314	ISI/VT/VT-108	A-1	ISI	-	-	-	-	-	-	s
B6.50	WASHER #14		CLOSURE WASHERS (48TOT)	AUG	-	-	-	-	-	-	-
1	RPV			OWN	-	-	-	-	-	-	-
				PRE	-	-	-	-	-	-	-
B-G-1	I001315	ISI/VT/VT-108	A-1	ISI	-	-	-	-	-	-	s
B6.50	WASHER #15		CLOSURE WASHERS (48TOT)	AUG	-	-	-	-	-	-	-
1	RPV			OWN	-	-	-	-	-	-	-
				PRE	-	-	-	-	-	-	-
B-G-1	I001316	ISI/VT/VT-108	A-1	ISI	-	-	-	-	-	-	s
B6.50	WASHER #16		CLOSURE WASHERS (48TOT)	AUG	-	-	-	-	-	-	-
1	RPV			OWN	-	-	-	-	-	-	-
				PRE	-	-	-	-	-	-	-
B-G-1	I001317	ISI/VT/VT-108	A-1	ISI	-	-	-	-	-	-	s
B6.50	WASHER #17		CLOSURE WASHERS (48TOT)	AUG	-	-	-	-	-	-	-
1	RPV			OWN	-	-	-	-	-	-	-
				PRE	-	-	-	-	-	-	-
B-G-1	I001318	ISI/VT/VT-108	A-1	ISI	-	-	-	-	-	-	s
B6.50	WASHER #18		CLOSURE WASHERS (48TOT)	AUG	-	-	-	-	-	-	-
1	RPV			OWN	-	-	-	-	-	-	-
				PRE	-	-	-	-	-	-	-
B-G-1	I001319	ISI/VT/VT-108	A-1	ISI	-	-	-	-	-	-	s
B6.50	WASHER #19		CLOSURE WASHERS (48TOT)	AUG	-	-	-	-	-	-	-
1	RPV			OWN	-	-	-	-	-	-	-
				PRE	-	-	-	-	-	-	-
B-G-1	I001320	ISI/VT/VT-108	A-1	ISI	-	-	-	-	-	-	s
B6.50	WASHER #20		CLOSURE WASHERS (48TOT)	AUG	-	-	-	-	-	-	-
1	RPV			OWN	-	-	-	-	-	-	-
				PRE	-	-	-	-	-	-	-
B-G-1	I001321	ISI/VT/VT-108	A-1	ISI	-	-	-	-	-	-	s
B6.50	WASHER #21		CLOSURE WASHERS (48TOT)	AUG	-	-	-	-	-	-	-
1	RPV			OWN	-	-	-	-	-	-	-
				PRE	-	-	-	-	-	-	-

Category, ItemNO, Class	Summary / CompID / System	Scope / Method / Procedure	Iso No. Comp. Desc. Code Case		Period 1 00	Period 1 02	Period 2 03	Period 2 05	Period 2 06	Period 3 08	Period 3 09
B-G-1	I001322	ISI/VT/VT-108	A-1	ISI	-	-	-	-	-	-	s
B6.50	WASHER #22		CLOSURE WASHERS (48TOT)	AUG	-	-	-	-	-	-	-
1	RPV			OWN	-	-	-	-	-	-	-
				PRE	-	-	-	-	-	-	-
B-G-1	I001323	ISI/VT/VT-108	A-1	ISI	-	-	-	-	-	-	s
B6.50	WASHER #23		CLOSURE WASHERS (48TOT)	AUG	-	-	-	-	-	-	-
1	RPV			OWN	-	-	-	-	-	-	-
				PRE	-	-	-	-	-	-	-
B-G-1	I001324	ISI/VT/VT-108	A-1	ISI	-	-	-	-	-	-	s
B6.50	WASHER #24		CLOSURE WASHERS (48TOT)	AUG	-	-	-	-	-	-	-
1	RPV			OWN	-	-	-	-	-	-	-
				PRE	-	-	-	-	-	-	-
B-G-1	I001325	ISI/VT/VT-108	A-1	ISI	-	-	-	-	-	-	s
B6.50	WASHER #25		CLOSURE WASHERS (48TOT)	AUG	-	-	-	-	-	-	-
1	RPV			OWN	-	-	-	-	-	-	-
				PRE	-	-	-	-	-	-	-
B-G-1	I001326	ISI/VT/VT-108	A-1	ISI	-	-	-	-	-	-	s
B6.50	WASHER #26		CLOSURE WASHERS (48TOT)	AUG	-	-	-	-	-	-	-
1	RPV			OWN	-	-	-	-	-	-	-
				PRE	-	-	-	-	-	-	-
B-G-1	I001327	ISI/VT/VT-108	A-1	ISI	-	-	-	-	-	-	s
B6.50	WASHER #27		CLOSURE WASHERS (48TOT)	AUG	-	-	-	-	-	-	-
1	RPV			OWN	-	-	-	-	-	-	-
				PRE	-	-	-	-	-	-	-
B-G-1	I001328	ISI/VT/VT-108	A-1	ISI	-	-	-	-	-	-	s
B6.50	WASHER #28		CLOSURE WASHERS (48TOT)	AUG	-	-	-	-	-	-	-
1	RPV			OWN	-	-	-	-	-	-	-
				PRE	-	-	-	-	-	-	-
B-G-1	I001329	ISI/VT/VT-108	A-1	ISI	-	-	-	-	-	-	s
B6.50	WASHER #29		CLOSURE WASHERS (48TOT)	AUG	-	-	-	-	-	-	-
1	RPV			OWN	-	-	-	-	-	-	-
				PRE	-	-	-	-	-	-	-
B-G-1	I001330	ISI/VT/VT-108	A-1	ISI	-	-	-	-	-	-	s
B6.50	WASHER #30		CLOSURE WASHERS (48TOT)	AUG	-	-	-	-	-	-	-
1	RPV			OWN	-	-	-	-	-	-	-
				PRE	-	-	-	-	-	-	-
B-G-1	I001331	ISI/VT/VT-108	A-1	ISI	-	-	-	-	-	-	s
B6.50	WASHER #31		CLOSURE WASHERS (48TOT)	AUG	-	-	-	-	-	-	-
1	RPV			OWN	-	-	-	-	-	-	-
				PRE	-	-	-	-	-	-	-

Category, ItemNO,. Class	Summary / CompID / System	Scope / Method / Procedure	Iso No. Comp. Desc. Code Case		Period 1 00	Period 1 02	Period 2 03	Period 2 05	Period 2 06	Period 3 08	Period 3 09
B-G-1	I001332	ISI/VT/VT-108	A-1	ISI	-	-	-	-	-	-	s
B6.50	WASHER #32		CLOSURE WASHERS (48TOT)	AUG	-	-	-	-	-	-	-
1	RPV			OWN	-	-	-	-	-	-	-
				PRE	-	-	-	-	-	-	-
B-G-1	I001333	ISI/VT/VT-108	A-1	ISI	-	-	-	-	-	-	s
B6.50	WASHER #33		CLOSURE WASHERS (48TOT)	AUG	-	-	-	-	-	-	-
1	RPV			OWN	-	-	-	-	-	-	-
				PRE	-	-	-	-	-	-	-
B-G-1	I001334	ISI/VT/VT-108	A-1	ISI	-	-	-	-	-	-	s
B6.50	WASHER #34		CLOSURE WASHERS (48TOT)	AUG	-	-	-	-	-	-	-
1	RPV			OWN	-	-	-	-	-	-	-
				PRE	-	-	-	-	-	-	-
B-G-1	I001335	ISI/VT/VT-108	A-1	ISI	-	-	-	-	-	-	s
B6.50	WASHER #35		CLOSURE WASHERS (48TOT)	AUG	-	-	-	-	-	-	-
1	RPV			OWN	-	-	-	-	-	-	-
				PRE	-	-	-	-	-	-	-
B-G-1	I001336	ISI/VT/VT-108	A-1	ISI	-	-	-	-	-	-	s
B6.50	WASHER #36		CLOSURE WASHERS (48TOT)	AUG	-	-	-	-	-	-	-
1	RPV			OWN	-	-	-	-	-	-	-
				PRE	-	-	-	-	-	-	-
B-G-1	I001337	ISI/VT/VT-108	A-1	ISI	-	-	-	-	-	-	s
B6.50	WASHER #37		CLOSURE WASHERS (48TOT)	AUG	-	-	-	-	-	-	-
1	RPV			OWN	-	-	-	-	-	-	-
				PRE	-	-	-	-	-	-	-
B-G-1	I001338	ISI/VT/VT-108	A-1	ISI	-	-	-	-	-	-	s
B6.50	WASHER #38		CLOSURE WASHERS (48TOT)	AUG	-	-	-	-	-	-	-
1	RPV			OWN	-	-	-	-	-	-	-
				PRE	-	-	-	-	-	-	-
B-G-1	I001339	ISI/VT/VT-108	A-1	ISI	-	-	-	-	-	-	s
B6.50	WASHER #39		CLOSURE WASHERS (48TOT)	AUG	-	-	-	-	-	-	-
1	RPV			OWN	-	-	-	-	-	-	-
				PRE	-	-	-	-	-	-	-
B-G-1	I001340	ISI/VT/VT-108	A-1	ISI	-	-	-	-	-	-	s
B6.50	WASHER #40		CLOSURE WASHERS (48TOT)	AUG	-	-	-	-	-	-	-
1	RPV			OWN	-	-	-	-	-	-	-
				PRE	-	-	-	-	-	-	-
B-G-1	I001341	ISI/VT/VT-108	A-1	ISI	-	-	-	-	-	-	s
B6.50	WASHER #41		CLOSURE WASHERS (48TOT)	AUG	-	-	-	-	-	-	-
1	RPV			OWN	-	-	-	-	-	-	-
				PRE	-	-	-	-	-	-	-

Category, ItemNO, Class	Summary / CompID / System	Scope / Method / Procedure	Iso No. Comp. Desc. Code Case		Period 1 00	Period 1 02	Period 2 03	Period 2 05	Period 2 06	Period 3 08	Period 3 09
B-G-1	I001342	ISI/VT/VT-108	A-1	ISI	-	-	-	-	-	-	s
B6.50	WASHER #42		CLOSURE WASHERS (48TOT)	AUG	-	-	-	-	-	-	-
1	RPV			OWN	-	-	-	-	-	-	-
				PRE	-	-	-	-	-	-	-
B-G-1	I001343	ISI/VT/VT-108	A-1	ISI	-	-	-	-	-	-	s
B6.50	WASHER #43		CLOSURE WASHERS (48TOT)	AUG	-	-	-	-	-	-	-
1	RPV			OWN	-	-	-	-	-	-	-
				PRE	-	-	-	-	-	-	-
B-G-1	I001344	ISI/VT/VT-108	A-1	ISI	-	-	-	-	-	-	s
B6.50	WASHER #44		CLOSURE WASHERS (48TOT)	AUG	-	-	-	-	-	-	-
1	RPV			OWN	-	-	-	-	-	-	-
				PRE	-	-	-	-	-	-	-
B-G-1	I001345	ISI/VT/VT-108	A-1	ISI	-	-	-	-	-	-	s
B6.50	WASHER #45		CLOSURE WASHERS (48TOT)	AUG	-	-	-	-	-	-	-
1	RPV			OWN	-	-	-	-	-	-	-
				PRE	-	-	-	-	-	-	-
B-G-1	I001346	ISI/VT/VT-108	A-1	ISI	-	-	-	-	-	-	s
B6.50	WASHER #46		CLOSURE WASHERS (48TOT)	AUG	-	-	-	-	-	-	-
1	RPV			OWN	-	-	-	-	-	-	-
				PRE	-	-	-	-	-	-	-
B-G-1	I001347	ISI/VT/VT-108	A-1	ISI	-	-	-	-	-	-	s
B6.50	WASHER #47		CLOSURE WASHERS (48TOT)	AUG	-	-	-	-	-	-	-
1	RPV			OWN	-	-	-	-	-	-	-
				PRE	-	-	-	-	-	-	-
B-G-1	I001348	ISI/VT/VT-108	A-1	ISI	-	-	-	-	-	-	s
B6.50	WASHER #48		CLOSURE WASHERS (48TOT)	AUG	-	-	-	-	-	-	-
1	RPV			OWN	-	-	-	-	-	-	-
				PRE	-	-	-	-	-	-	-
B-G-2	I005600	ISI/VT/VT-108	A-4	ISI	-	c	-	-	-	-	-
B7.20	PZR MANWAY BOLTING		PZR MANWAY BOLTING (16 TOTAL)	AUG	-	-	-	-	-	-	-
1	PZR			OWN	-	-	-	-	-	-	-
				PRE	-	-	-	-	-	-	-
B-G-2	I006430	ISI/VT/VT-108	A-5	ISI	-	-	-	-	-	s	-
B7.30	IMN-AR		INLET MANWAY NUTS (20)	AUG	-	-	-	-	-	-	-
1	SG			OWN	-	-	-	-	-	-	-
				PRE	-	-	-	-	-	-	-
B-G-2	I006435	ISI/VT/VT-108	A-5	ISI	-	-	-	-	-	s	-
B7.30	IMS-AR		INLET MANWAY STUDS (20)	AUG	-	-	-	-	-	-	-
1	SG			OWN	-	-	-	-	-	-	-
				PRE	-	-	-	-	-	-	-

Category, ItemNO, Class	Summary / CompID / System	Scope / Method / Procedure	Iso No. Comp. Desc. Code Case		Period 1 00	Period 1 02	Period 2 03	Period 2 05	Period 2 06	Period 3 08	Period 3 09
B-G-2	I006530	ISI/VT/VT-108	A-5	ISI	-	-	-	-	-	s	-
B7.30	OMN-AR		OUTLET MANWAY NUTS (20)	AUG	-	-	-	-	-	-	-
1	SG			OWN	-	-	-	-	-	-	-
				PRE	-	-	-	-	-	-	-
B-G-2	I006535	ISI/VT/VT-108	A-5	ISI	-	-	-	-	-	s	-
B7.30	OMS-AR		OUTLET MANWAY STUDS (20)	AUG	-	-	-	-	-	-	-
1	SG			OWN	-	-	-	-	-	-	-
				PRE	-	-	-	-	-	-	-
B-G-2	I007430	ISI/VT/VT-108	A-5	ISI	-	-	-	s	-	-	-
B7.30	IMN-BR		INLET MANWAY NUTS (20)	AUG	-	-	-	-	-	-	-
1	SG			OWN	-	-	-	-	-	-	-
				PRE	-	-	-	-	-	-	-
B-G-2	I007435	ISI/VT/VT-108	A-5	ISI	-	-	-	s	-	-	-
B7.30	IMS-BR		INLET MANWAY STUDS (20)	AUG	-	-	-	-	-	-	-
1	SG			OWN	-	-	-	-	-	-	-
				PRE	-	-	-	-	-	-	-
B-G-2	I007530	ISI/VT/VT-108	A-5	ISI	-	c	-	-	-	-	-
B7.30	OMN-BR		OUTLET MANWAY NUTS (20)	AUG	-	-	-	-	-	-	-
1	SG			OWN	-	-	-	-	-	-	-
				PRE	-	-	-	-	-	-	-
B-G-2	I007535	ISI/VT/VT-108	A-5	ISI	-	c	-	-	-	-	-
B7.30	OMS-BR		OUTLET MANWAY STUDS (20)	AUG	-	-	-	-	-	-	-
1	SG			OWN	-	-	-	-	-	-	-
				PRE	-	-	-	-	-	-	-
B-G-2	I058300	ISI/VT/VT-108	A-16	ISI	r	r	r	t	t	t	t
B7.70	V-842A (BOLTING)	ISI/VT/VT-108	10" DARLING CHECK VALVE	AUG	-	-	-	-	-	-	-
1	HPSI			OWN	-	-	-	-	-	-	-
				PRE	-	-	-	-	-	-	-
B-G-2	I058400	ISI/VT/VT-108	A-17	ISI	r	r	r	t	t	t	t
B7.70	V-842B (BOLTING)	ISI/VT/VT-108	10" DARLING CHECK VALVE	AUG	-	-	-	-	-	-	-
1	HPSI			OWN	-	-	-	-	-	-	-
				PRE	-	-	-	-	-	-	-
B-G-2	I058500	ISI/VT/VT-108	A-16	ISI	r	r	r	t	t	t	t
B7.70	V-867A (BOLTING)	ISI/VT/VT-108	10" DARLING CHECK VALVE	AUG	-	-	-	-	-	-	-
1	HPSI			OWN	-	-	-	-	-	-	-
				PRE	-	-	-	-	-	-	-
B-G-2	I058600	ISI/VT/VT-108	A-17	ISI	r	r	r	t	t	t	t
B7.70	V-867B (BOLTING)	ISI/VT/VT-108	10" DARLING CHECK VALVE	AUG	-	-	-	-	-	-	-
1	HPSI			OWN	-	-	-	-	-	-	-
				PRE	-	-	-	-	-	-	-

Category, ItemNO, Class	Summary / CompID / System	Scope / Method / Procedure	Iso No. Comp. Desc. Code Case		Period 1 00	Period 1 02	Period 2 03	Period 2 05	Period 2 06	Period 3 08	Period 3 09
B-G-2	I058900	ISI/VT/VT-108	A-15	ISI	r	r	r	t	t	t	t
B7.70	V-700 (BOLTING)	ISI/VT/VT-108	10" VELAN MOTOR OPER. GATE VALVE 1500#	AUG	-	-	-	-	-	-	-
1	RHR			OWN	-	-	-	-	-	-	-
				PRE	-	-	-	-	-	-	-
B-G-2	I059100	ISI/VT/VT-108	A-15	ISI	r	r	r	t	t	t	t
B7.70	V-701 (BOLTING)	ISI/VT/VT-108	10" VELAN MOTOR OPER. GATE VALVE 1500#	AUG	-	-	-	-	-	-	-
1	RHR			OWN	-	-	-	-	-	-	-
				PRE	-	-	-	-	-	-	-
B-G-2	I059300	ISI/VT/VT-108	A-14	ISI	r	r	r	t	t	t	s
B7.70	V-720 (BOLTING)	ISI/VT/VT-108	10" VELAN MOTOR OPER. GATE VALVE 1500#	AUG	-	-	-	-	-	-	-
1	RHR			OWN	-	-	-	-	-	-	-
				PRE	-	-	-	-	-	-	-
B-G-2	I059500	ISI/VT/VT-108	A-14	ISI	r	r	r	t	t	t	t
B7.70	V-721 (BOLTING)	ISI/VT/VT-108	10" VELAN MOTOR OPER. GATE VALVE 1500#	AUG	-	-	-	-	-	-	-
1	RHR			OWN	-	-	-	-	-	-	-
				PRE	-	-	-	-	-	-	-
B-G-2	I059600	ISI/VT/VT-108	A-14	ISI	r	r	r	t	t	t	t
B7.70	V-853A (BOLTING)	ISI/VT/VT-108	6" VELAN CHECK VALVE	AUG	-	-	-	-	-	-	-
1	RC-2			OWN	-	-	-	-	-	-	-
				PRE	-	-	-	-	-	-	-
B-G-2	I059700	ISI/VT/VT-108	A-18	ISI	r	r	r	t	t	t	t
B7.70	V-853B (BOLTING)	ISI/VT/VT-108	6" VELAN CHECK VALVE	AUG	-	-	-	-	-	-	-
1	RC-2			OWN	-	-	-	-	-	-	-
				PRE	-	-	-	-	-	-	-
B-G-2	I059800	ISI/VT/VT-108	A-14	ISI	r	r	r	t	t	t	t
B7.70	V-852A (BOLTING)	ISI/VT/VT-108	6" VELAN MOTOR OPER. GATE VALVE	AUG	-	-	-	-	-	-	-
1	RC-1			OWN	-	-	-	-	-	-	-
				PRE	-	-	-	-	-	-	-
B-G-2	I059900	ISI/VT/VT-108	A-18	ISI	r	r	r	t	t	t	t
B7.70	V-852B (BOLTING)	ISI/VT/VT-108	6" VELAN MOTOR OPER. GATE VALVE	AUG	-	-	-	-	-	-	-
1	RC-1			OWN	-	-	-	-	-	-	-
				PRE	-	-	-	-	-	-	-
BJ	I037100		A-18	ISI	-	-	-	-	-	-	-
/B9.11	E		PIPE-TO-ELBOW	AUG	-	-	-	-	-	-	-
1	RC			OWN	-	-	-	-	-	-	-
				PRE	-	-	-	-	-	-	-
BJ	I037200		A-18	ISI	-	-	-	-	-	-	-
/B9.11	D		ELBOW-TO-PIPE	AUG	-	-	-	-	-	-	-
1	RC			OWN	-	-	-	-	-	-	-
				PRE	-	-	-	-	-	-	-

Category, ItemNO, Class	Summary / CompID / System	Scope / Method / Procedure	Iso No. Comp. Desc. Code Case		Period 1 00	Period 1 02	Period 2 03	Period 2 05	Period 2 06	Period 3 08	Period 3 09
BJ	I037300		A-18	ISI	-	-	-	-	-	-	-
/B9.11	C		PIPE-TO-ELBOW	AUG	-	-	-	-	-	-	-
1	RC			OWN	-	-	-	-	-	-	-
				PRE	-	-	-	-	-	-	-
BJ	I037400		A-18	ISI	-	-	-	-	-	-	-
/B9.11	B		ELBOW-TO-PIPE	AUG	-	-	-	-	-	-	-
1	RC			OWN	-	-	-	-	-	-	-
				PRE	-	-	-	-	-	-	-
BJ	I037500		A-18	ISI	-	-	-	-	-	-	-
/B9.11	A		PIPE-TO-SAFE END	AUG	-	-	-	-	-	-	-
1	RC			OWN	-	-	-	-	-	-	-
				PRE	-	-	-	-	-	-	-
BJ	I038200		A-14	ISI	-	-	-	-	-	-	-
/B9.11	E		PIPE-TO-ELBOW	AUG	-	-	-	-	-	-	-
1	RC			OWN	-	-	-	-	-	-	-
				PRE	-	-	-	-	-	-	-
BJ	I038300		A-14	ISI	-	-	-	-	-	-	-
/B9.11	D		ELBOW-TO-PIPE	AUG	-	-	-	-	-	-	-
1	RC			OWN	-	-	-	-	-	-	-
				PRE	-	-	-	-	-	-	-
BJ	I038400		A-14	ISI	-	-	-	-	-	-	-
/B9.11	C		PIPE-TO-ELBOW	AUG	-	-	-	-	-	-	-
1	RC			OWN	-	-	-	-	-	-	-
				PRE	-	-	-	-	-	-	-
BJ	I038500		A-14	ISI	-	-	-	-	-	-	-
/B9.11	B		ELBOW-TO-PIPE	AUG	-	-	-	-	-	-	-
1	RC			OWN	-	-	-	-	-	-	-
				PRE	-	-	-	-	-	-	-
BJ	I038600		A-14	ISI	-	-	-	-	-	-	-
/B9.11	A		PIPE-TO-SAFE END	AUG	-	-	-	-	-	-	-
1	RC			OWN	-	-	-	-	-	-	-
				PRE	-	-	-	-	-	-	-
BJ	I011510		A-3-1B	ISI	-	-	-	-	-	-	-
/B9.12	PL-FW-XVI-LT (XII-ASW)		LONGITUDINAL SEAM WELD	AUG	-	-	-	-	-	-	-
1	RC			OWN	-	-	-	-	-	-	-
				PRE	-	-	-	-	-	-	-
BJ	I011520		A-3-1B	ISI	-	-	-	-	-	-	-
/B9.12	PL-FW-XVI-LR (XVI)		LONGITUDINAL SEAM WELD	AUG	-	-	-	-	-	-	-
1	RC			OWN	-	-	-	-	-	-	-
				PRE	-	-	-	-	-	-	-

Category, ItemNO, Class	Summary / CompID / System	Scope / Method / Procedure	Iso No. Comp. Desc. Code Case		Period 1 00	Period 1 02	Period 2 03	Period 2 05	Period 2 06	Period 3 08	Period 3 09
BJ	I011810		A-3-1B	ISI	-	-	-	-	-	-	-
/B9.12	PL-FW-XII-LT (XII)		LONGITUDINAL SEAM WELD	AUG	-	-	-	-	-	-	-
1	RC			OWN	-	-	-	-	-	-	-
				PRE	-	-	-	-	-	-	-
BJ	I011820		A-3-1B	ISI	-	-	-	-	-	-	-
/B9.12	PL-FW-XII-LR (XIII)		LONGITUDINAL SEAM WELD	AUG	-	-	-	-	-	-	-
1	RC			OWN	-	-	-	-	-	-	-
				PRE	-	-	-	-	-	-	-
BJ	I012450		A-3-1C	ISI	-	-	-	-	-	-	-
/B9.12	PL-FW-L1		LONGITUDINAL SEAM WELD	AUG	-	-	-	-	-	-	-
1	RC			OWN	-	-	-	-	-	-	-
				PRE	-	-	-	-	-	-	-
BJ	I012475		A-3-1C	ISI	-	-	-	-	-	-	-
/B9.12	PL-FW-L2		LONGITUDINAL SEAM WELD	AUG	-	-	-	-	-	-	-
1	RC			OWN	-	-	-	-	-	-	-
				PRE	-	-	-	-	-	-	-
BJ	I013010		A-3-2B	ISI	-	-	-	-	-	-	-
/B9.12	PL-FW-XIV-LT (XIV)		LONGITUDINAL SEAM WELD	AUG	-	-	-	-	-	-	-
1	RC			OWN	-	-	-	-	-	-	-
				PRE	-	-	-	-	-	-	-
BJ	I013020		A-3-2B	ISI	-	-	-	-	-	-	-
/B9.12	PL-FW-XIV-LR (XIV-BSW)		LONGITUDINAL SEAM WELD	AUG	-	-	-	-	-	-	-
1	RC			OWN	-	-	-	-	-	-	-
				PRE	-	-	-	-	-	-	-
BJ	I013310		A-3-2B	ISI	-	-	-	-	-	-	-
/B9.12	PL-FW-XI-LT (XI)		LONGITUDINAL SEAM WELD	AUG	-	-	-	-	-	-	-
1	RC			OWN	-	-	-	-	-	-	-
				PRE	-	-	-	-	-	-	-
BJ	I013320		A-3-2B	ISI	-	-	-	-	-	-	-
/B9.12	PL-FW-XI-LR (XV)		LONGITUDINAL SEAM WELD	AUG	-	-	-	-	-	-	-
1	RC			OWN	-	-	-	-	-	-	-
				PRE	-	-	-	-	-	-	-
BJ	I013950		A-3-2C	ISI	-	-	-	-	-	-	-
/B9.12	PL-FW-L3		LONGITUDINAL SEAM WELD	AUG	-	-	-	-	-	-	-
1	RC			OWN	-	-	-	-	-	-	-
				PRE	-	-	-	-	-	-	-
BJ	I013975		A-3-2C	ISI	-	-	-	-	-	-	-
/B9.12	PL-FW-L4		LONGITUDINAL SEAM WELD	AUG	-	-	-	-	-	-	-
1	RC			OWN	-	-	-	-	-	-	-
				PRE	-	-	-	-	-	-	-

Category, ItemNO, Class	Summary / CompID / System	Scope / Method / Procedure	Iso No. Comp. Desc. Code Case		Period 1 00	Period 1 02	Period 2 03	Period 2 05	Period 2 06	Period 3 08	Period 3 09
BJ	I031800		A-15	ISI	-	-	-	-	-	-	-
/B9.12	DSW-1LD-1		LONGITUDINAL SEAM WELD	AUG	-	-	-	-	-	-	-
1	RHR			OWN	-	-	-	-	-	-	-
				PRE	-	-	-	-	-	-	-
BJ	I031900		A-15	ISI	-	-	-	-	-	-	-
/B9.12	DSW-1LD-2		LONGITUDINAL SEAM WELD	AUG	-	-	-	-	-	-	-
1	RHR			OWN	-	-	-	-	-	-	-
				PRE	-	-	-	-	-	-	-
BJ	I032000		A-15	ISI	-	-	-	-	-	-	-
/B9.12	DSW-2LU-1		LONGITUDINAL SEAM WELD	AUG	-	-	-	-	-	-	-
1	RHR			OWN	-	-	-	-	-	-	-
				PRE	-	-	-	-	-	-	-
BJ	I032100		A-15	ISI	-	-	-	-	-	-	-
/B9.12	DSW-2LU-2		LONGITUDINAL SEAM WELD	AUG	-	-	-	-	-	-	-
1	RHR			OWN	-	-	-	-	-	-	-
				PRE	-	-	-	-	-	-	-
B-J	I004400	ISI/PT/PT-106	A-4	ISI	c	-	-	-	-	-	-
B9.11	SLNSEW	ISI/UT/UT-208	SAFE END-TO-REDUCER (SURGE LINE)	AUG	-	-	-	-	-	-	-
1	PZR			OWN	-	-	-	-	-	-	-
				PRE	-	-	-	-	-	-	-
B-J	I006000	ISI/PT/PT-106	A-3-1A	ISI	-	c	-	-	-	-	-
B9.11	PL-FW-I-ASW-R	ISI/RT/RT-104	ELBOW-TO-SAFE END	AUG	-	-	-	-	-	-	-
1	RC			OWN	-	-	-	-	-	-	-
				PRE	-	-	-	-	-	-	-
B-J	I006200	ISI/PT/PT-106	A-3-1B	ISI	-	c	-	-	-	-	-
B9.11	PL-FW-IX-ASW-R	ISI/RT/RT-104	SAFE END-TO-ELBOW (OUTLET)	AUG	-	-	-	-	-	-	-
1	RC			OWN	-	-	-	-	-	-	-
				PRE	-	-	-	-	-	-	-
B-J	I007000	ISI/PT/PT-106	A-3-2A	ISI	-	-	-	-	s	-	-
B9.11	PL-FW-III-R	ISI/RT/RT-104	ELBOW-TO-SAFE END (INLET)	AUG	-	-	-	-	-	-	-
1	RC			OWN	-	-	-	-	-	-	-
				PRE	-	-	-	-	-	-	-
B-J	I007200	ISI/PT/PT-106	A-3-2B	ISI	-	-	-	-	s	-	-
B9.11	PL-FW-X-R	ISI/RT/RT-104	SAFE END-TO-ELBOW (OUTLET)	AUG	-	-	-	-	-	-	-
1	RC			OWN	-	-	-	-	-	-	-
				PRE	-	-	-	-	-	-	-
B-J	I011200		A-3-1A	ISI	-	-	-	-	-	-	-
B9.11	PL-FW-I		PIPE-TO-ELBOW	AUG	-	-	-	-	-	-	-
1	RC			OWN	-	-	-	-	-	-	-
				PRE	-	-	-	-	-	-	-

Category, ItemNO, Class	Summary / CompID / System	Scope / Method / Procedure	Iso No. Comp. Desc. Code Case		Period 1 00	Period 1 02	Period 2 03	Period 2 05	Period 2 06	Period 3 08	Period 3 09
B-J	I011400		A-3-1B	ISI	-	-	-	-	-	-	-
B9.11	PL-FW-XVI-ASW		ELBOW-TO-PIPE	AUG	-	-	-	-	-	-	-
1	RC			OWN	-	-	-	-	-	-	-
				PRE	-	-	-	-	-	-	-
B-J	I011500		A-3-1B	ISI	-	-	-	-	-	-	-
B9.11	PL-FW-XVI		PIPE-TO-ELBOW	AUG	-	-	-	-	-	-	-
1	RC			OWN	-	-	-	-	-	-	-
				PRE	-	-	-	-	-	-	-
B-J	I011600		A-3-1B	ISI	-	-	-	-	-	-	-
B9.11	PL-FW-XII-ASW		ELBOW-TO-PIPE	AUG	-	-	-	-	-	-	-
1	RC			OWN	-	-	-	-	-	-	-
				PRE	-	-	-	-	-	-	-
B-J	I011800		A-3-1B	ISI	-	-	-	-	-	-	-
B9.11	PL-FW-XII		PIPE-TO-ELBOW	AUG	-	-	-	-	-	-	-
1	RC			OWN	-	-	-	-	-	-	-
				PRE	-	-	-	-	-	-	-
B-J	I012000	ISI/PT/PT-106	A-3-1B	ISI	-	-	-	-	-	s	-
B9.11	PL-FW-XIII	ISI/UT/UT-208	ELBOW-TO-PUMP(RCP-A)	AUG	-	-	-	-	-	-	-
1	RC			OWN	-	-	-	-	-	-	-
				PRE	-	-	-	-	-	-	-
B-J	I012100	ISI/PT/PT-106	A-3-1C	ISI	-	-	-	s	-	-	-
B9.11	PL-FW-VI	ISI/UT/UT-208	PUMP(RCP-A)-TO-PIPE	AUG	-	-	-	-	-	-	-
1	RC			OWN	-	-	-	-	-	-	-
				PRE	-	-	-	-	-	-	-
B-J	I012425		A-3-1C	ISI	-	-	-	-	-	-	-
B9.11	PL-FW-G		PIPE-TO-ELBOW	AUG	-	-	-	-	-	-	-
1	RC			OWN	-	-	-	-	-	-	-
				PRE	-	-	-	-	-	-	-
B-J	I012800		A-3-2A	ISI	-	-	-	-	-	-	-
B9.11	PL-FW-IV-BSW		PIPE-TO-ELBOW	AUG	-	-	-	-	-	-	-
1	RC			OWN	-	-	-	-	-	-	-
				PRE	-	-	-	-	-	-	-
B-J	I012900		A-3-2B	ISI	-	-	-	-	-	-	-
B9.11	PL-FW-X-BSW		ELBOW-TO-PIPE	AUG	-	-	-	-	-	-	-
1	RC			OWN	-	-	-	-	-	-	-
				PRE	-	-	-	-	-	-	-
B-J	I013000		A-3-2B	ISI	-	-	-	-	-	-	-
B9.11	PL-FW-XIV		PIPE-TO-ELBOW	AUG	-	-	-	-	-	-	-
1	RC			OWN	-	-	-	-	-	-	-
				PRE	-	-	-	-	-	-	-

Category, ItemNO, Class	Summary / CompID / System	Scope / Method / Procedure	Iso No. Comp. Desc. Code Case		Period 1 00	Period 1 02	Period 2 03	Period 2 05	Period 2 06	Period 3 08	Period 3 09
B-J	I013100		A-3-2B	ISI	-	-	-	-	-	-	-
B9.11	PL-FW-XIV-BSW		ELBOW-TO-PIPE	AUG	-	-	-	-	-	-	-
1	RC			OWN	-	-	-	-	-	-	-
				PRE	-	-	-	-	-	-	-
B-J	I013300		A-3-2B	ISI	-	-	-	-	-	-	-
B9.11	PL-FW-XI		PIPE-TO-ELBOW	AUG	-	-	-	-	-	-	-
1	RC			OWN	-	-	-	-	-	-	-
				PRE	-	-	-	-	-	-	-
B-J	I013500	ISI/PT/PT-106	A-3-2B	ISI	-	-	-	s	-	-	-
B9.11	PL-FW-XV	ISI/UT/UT-208	ELBOW-TO-PUMP(RCP-B)	AUG	-	-	-	-	-	-	-
1	RC			OWN	-	-	-	-	-	-	-
				PRE	-	-	-	-	-	-	-
B-J	I013600	ISI/PT/PT-106	A-3-2C	ISI	-	-	-	-	-	s	-
B9.11	PL-FW-VIII	ISI/UT/UT-208	PUMP(RCP-B)-TO-PIPE	AUG	-	-	-	-	-	-	-
1	RC			OWN	-	-	-	-	-	-	-
				PRE	-	-	-	-	-	-	-
B-J	I013925		A-3-2C	ISI	-	-	-	-	-	-	-
B9.11	PL-FW-GG		PIPE-TO-ELBOW	AUG	-	-	-	-	-	-	-
1	RC			OWN	-	-	-	-	-	-	-
				PRE	-	-	-	-	-	-	-
B-J	I014000	ISI/PT/PT-106	A-3-2	ISI	-	-	-	-	s	-	-
B9.11	A	ISI/UT/UT-208	REDUCER-TO-PIPE (SURGE LINE)	AUG	-	-	-	-	-	-	-
1	PZR			OWN	-	-	-	-	-	-	-
				PRE	-	-	-	-	-	-	-
B-J	I014100		A-3-2	ISI	-	-	-	-	-	-	-
B9.11	B		PIPE-TO-PIPE	AUG	-	-	-	-	-	-	-
1	PZR			OWN	-	-	-	-	-	-	-
				PRE	-	-	-	-	-	-	-
B-J	I014200		A-3-2	ISI	-	-	-	-	-	-	-
B9.11	C		PIPE-TO-PIPE	AUG	-	-	-	-	-	-	-
1	PZR			OWN	-	-	-	-	-	-	-
				PRE	-	-	-	-	-	-	-
B-J	I014500		A-3-2	ISI	-	-	-	-	-	-	-
B9.11	D		PIPE-TO-NOZZLE (LOOP B HOT LEG)	AUG	-	-	-	-	-	-	-
1	PZR			OWN	-	-	-	-	-	-	-
				PRE	-	-	-	-	-	-	-
B-J	I019700	ISI/PT/PT-106	A-9	ISI	-	-	c	-	-	-	-
B9.11	M	ISI/RT/RT-104	4" RED-TO-SAFE END	AUG	-	-	-	-	-	-	-
1	PZR			OWN	-	-	-	-	-	-	-
				PRE	-	-	-	-	-	-	-

Category, ItemNO, Class	Summary / CompID / System	Scope / Method / Procedure	Iso No. Comp. Desc. Code Case		Period 1 00	Period 1 02	Period 2 03	Period 2 05	Period 2 06	Period 3 08	Period 3 09
B-J	I026200	ISI/PT/PT-106	A-12	ISI	-	-	-	-	-	s	-
B9.11	A	ISI/UT/UT-208	SAFE END-TO-ELBOW (RELIEF LINE)	AUG	-	-	-	-	-	-	-
1	PZR			OWN	-	-	-	-	-	-	-
				PRE	-	-	-	-	-	-	-
B-J	I026300		A-12	ISI	-	-	-	-	-	-	-
B9.11	ASW-1		ELBOW-TO-PIPE	AUG	-	-	-	-	-	-	-
1	PZR			OWN	-	-	-	-	-	-	-
				PRE	-	-	-	-	-	-	-
B-J	I026400		A-12	ISI	-	-	-	-	-	-	-
B9.11	ASW-2		PIPE-TO-TEE	AUG	-	-	-	-	-	-	-
1	PZR			OWN	-	-	-	-	-	-	-
				PRE	-	-	-	-	-	-	-
B-J	I026500		A-12	ISI	-	-	-	-	-	-	-
B9.11	B		TEE-TO-REDUCER	AUG	-	-	-	-	-	-	-
1	PZR			OWN	-	-	-	-	-	-	-
				PRE	-	-	-	-	-	-	-
B-J	I026900		A-12	ISI	-	-	-	-	-	-	-
B9.11	A2		TEE-TO-REDUCER	AUG	-	-	-	-	-	-	-
1	PZR			OWN	-	-	-	-	-	-	-
				PRE	-	-	-	-	-	-	-
B-J	I027400	ISI/PT/PT-106	A-13	ISI	-	-	-	-	-	s	-
B9.11	G	ISI/UT/UT-208	REDUCER-TO-ELBOW	AUG	-	-	-	-	-	-	-
1	PZR			OWN	-	-	-	-	-	-	-
				PRE	-	-	-	-	-	-	-
B-J	I027500		A-13	ISI	-	-	-	-	-	-	-
B9.11	F		ELBOW-TO-PIPE	AUG	-	-	-	-	-	-	-
1	PZR			OWN	-	-	-	-	-	-	-
				PRE	-	-	-	-	-	-	-
B-J	I027600		A-13	ISI	-	-	-	-	-	-	-
B9.11	E		PIPE-TO-ELBOW	AUG	-	-	-	-	-	-	-
1	PZR			OWN	-	-	-	-	-	-	-
				PRE	-	-	-	-	-	-	-
B-J	I027700	ISI/PT/PT-106	A-13	ISI	-	c	-	-	-	-	-
B9.11	D	ISI/UT/UT-208	ELBOW-TO-PIPE	AUG	-	-	-	-	-	-	-
1	PZR			OWN	-	-	-	-	-	-	-
				PRE	-	-	-	-	-	-	-
B-J	I027800		A-13	ISI	-	-	-	-	-	-	-
B9.11	C		PIPE-TO-ELBOW	AUG	-	-	-	-	-	-	-
1	PZR			OWN	-	-	-	-	-	-	-
				PRE	-	-	-	-	-	-	-

Category, ItemNO, Class	Summary / CompID / System	Scope / Method / Procedure	Iso No. Comp. Desc. Code Case		Period 1 00	Period 1 02	Period 2 03	Period 2 05	Period 2 06	Period 3 08	Period 3 09
B-J	I027900		A-13	ISI	-	-	-	-	-	-	-
B9.11	B		ELBOW-TO-ELBOW	AUG	-	-	-	-	-	-	-
1	PZR			OWN	-	-	-	-	-	-	-
				PRE	-	-	-	-	-	-	-
B-J	I028000		A-13	ISI	-	-	-	-	-	-	-
B9.11	A		ELBOW-TO-FLANGE(VALVE 435)	AUG	-	-	-	-	-	-	-
1	PZR			OWN	-	-	-	-	-	-	-
				PRE	-	-	-	-	-	-	-
B-J	I028200	ISI/PT/PT-106	A-13	ISI	-	-	-	s	-	-	-
B9.11	Q	ISI/UT/UT-208	REDUCER-TO-ELBOW	AUG	-	-	-	-	-	-	-
1	PZR			OWN	-	-	-	-	-	-	-
				PRE	-	-	-	-	-	-	-
B-J	I028300		A-13	ISI	-	-	-	-	-	-	-
B9.11	P		ELBOW-TO-PIPE	AUG	-	-	-	-	-	-	-
1	PZR			OWN	-	-	-	-	-	-	-
				PRE	-	-	-	-	-	-	-
B-J	I028400		A-13	ISI	-	-	-	-	-	-	-
B9.11	N		PIPE-TO-ELBOW	AUG	-	-	-	-	-	-	-
1	PZR			OWN	-	-	-	-	-	-	-
				PRE	-	-	-	-	-	-	-
B-J	I028500	ISI/UT/UT-208	A-13	ISI	-	-	c	-	-	-	-
B9.11	M	ISI/PT/PT-106	ELBOW-TO-PIPE	AUG	-	-	-	-	-	-	-
1	PZR			OWN	-	-	-	-	-	-	-
				PRE	-	-	-	-	-	-	-
B-J	I028600		A-13	ISI	-	-	-	-	-	-	-
B9.11	L		PIPE-TO-ELBOW	AUG	-	-	-	-	-	-	-
1	PZR			OWN	-	-	-	-	-	-	-
				PRE	-	-	-	-	-	-	-
B-J	I028700	ISI/PT/PT-106	A-13	ISI	c	-	-	-	-	-	-
B9.11	K	ISI/UT/UT-208	ELBOW-TO-ELBOW	AUG	-	-	-	-	-	-	-
1	PZR			OWN	-	-	-	-	-	-	-
				PRE	-	-	-	-	-	-	-
B-J	I028800		A-13	ISI	-	-	-	-	-	-	-
B9.11	J		ELBOW-TO-FLANGE(VALVE 434)	AUG	-	-	-	-	-	-	-
1	PZR			OWN	-	-	-	-	-	-	-
				PRE	-	-	-	-	-	-	-
B-J	I028900	ISI/PT/PT-106	A-14	ISI	-	-	-	-	-	-	s
B9.11	A	ISI/UT/UT-208	VALVE(720)-TO-PIPE	AUG	-	-	-	-	-	-	-
1	RHR			OWN	-	-	-	-	-	-	-
				PRE	-	-	-	-	-	-	-

Category, ItemNO, Class	Summary / CompID / System	Scope / Method / Procedure	Iso No. Comp. Desc. Code Case		Period 1 00	Period 1 02	Period 2 03	Period 2 05	Period 2 06	Period 3 08	Period 3 09
B-J	I029100	ISI/PT/PT-106	A-14	ISI	-	-	-	s	-	-	-
B9.11	ASW-1	ISI/UT/UT-208	PIPE-TO-ELBOW	AUG	-	-	-	-	-	-	-
1	RHR			OWN	-	-	-	-	-	-	-
				PRE	-	-	-	-	-	-	-
B-J	I029200		A-14	ISI	-	-	-	-	-	-	-
B9.11	ASW-2		ELBOW-TO-PIPE	AUG	-	-	-	-	-	-	-
1	RHR			OWN	-	-	-	-	-	-	-
				PRE	-	-	-	-	-	-	-
B-J	I029300		A-14	ISI	-	-	-	-	-	-	-
B9.11	ASW-3		PIPE-TO-ELBOW	AUG	-	-	-	-	-	-	-
1	RHR			OWN	-	-	-	-	-	-	-
				PRE	-	-	-	-	-	-	-
B-J	I029350		A-14	ISI	-	-	-	-	-	-	-
B9.11	ASW-4		ELBOW-TO-PIPE	AUG	-	-	-	-	-	-	-
1	RHR			OWN	-	-	-	-	-	-	-
				PRE	-	-	-	-	-	-	-
B-J	I029400	ISI/PT/PT-106	A-14	ISI	-	-	-	-	-	s	-
B9.11	B	ISI/UT/UT-208	PIPE-TO-VALVE(721)	AUG	-	-	-	-	-	-	-
1	RHR			OWN	-	-	-	-	-	-	-
				PRE	-	-	-	-	-	-	-
B-J	I029500		A-14	ISI	-	-	-	-	-	-	-
B9.11	C		VALVE(721)-TO-ELBOW	AUG	-	-	-	-	-	-	-
1	RC			OWN	-	-	-	-	-	-	-
				PRE	-	-	-	-	-	-	-
B-J	I029700	ISI/PT/PT-106	A-14	ISI	c	-	-	-	-	-	-
B9.11	CSW-1	ISI/UT/UT-208	ELBOW-TO-PIPE	AUG	-	-	-	-	-	-	-
1	RC			OWN	-	-	-	-	-	-	-
				PRE	-	-	-	-	-	-	-
B-J	I029800	ISI/PT/PT-106	A-14	ISI	-	-	-	-	-	-	s
B9.11	CSW-2	ISI/UT/UT-208	PIPE-TO-ELBOW	AUG	-	-	-	-	-	-	-
1	RC			OWN	-	-	-	-	-	-	-
				PRE	-	-	-	-	-	-	-
B-J	I029900		A-14	ISI	-	-	-	-	-	-	-
B9.11	CSW-3		ELBOW-TO-PIPE	AUG	-	-	-	-	-	-	-
1	RC			OWN	-	-	-	-	-	-	-
				PRE	-	-	-	-	-	-	-
B-J	I030100		A-14	ISI	-	-	-	-	-	-	-
B9.11	CSW-3A		PIPE-TO-ELBOW	AUG	-	-	-	-	-	-	-
1	RC			OWN	-	-	-	-	-	-	-
				PRE	-	-	-	-	-	-	-

Category, ItemNO, Class	Summary / CompID / System	Scope / Method / Procedure	Iso No. Comp. Desc. Code Case		Period 1 00	Period 1 02	Period 2 03	Period 2 05	Period 2 06	Period 3 08	Period 3 09
B-J	I030200		A-14	ISI	-	-	-	-	-	-	-
B9.11	CSW-4		ELBOW-TO-TEE	AUG	-	-	-	-	-	-	-
1	RC			OWN	-	-	-	-	-	-	-
				PRE	-	-	-	-	-	-	-
B-J	I030300		A-14	ISI	-	-	-	-	-	-	-
B9.11	CSW-5		TEE-TO-NOZZLE	AUG	-	-	-	-	-	-	-
1	RC			OWN	-	-	-	-	-	-	-
				PRE	-	-	-	-	-	-	-
B-J	I030400		A-15	ISI	-	-	-	-	-	-	-
B9.11	A		NOZZLE-TO-PIPE	AUG	-	-	-	-	-	-	-
1	RC			OWN	-	-	-	-	-	-	-
				PRE	-	-	-	-	-	-	-
B-J	I030500		A-15	ISI	-	-	-	-	-	-	-
B9.11	ASW-1		PIPE-TO-ELBOW	AUG	-	-	-	-	-	-	-
1	RC			OWN	-	-	-	-	-	-	-
				PRE	-	-	-	-	-	-	-
B-J	I030600		A-15	ISI	-	-	-	-	-	-	-
B9.11	B		ELBOW-TO-VALVE(700)	AUG	-	-	-	-	-	-	-
1	RC			OWN	-	-	-	-	-	-	-
				PRE	-	-	-	-	-	-	-
B-J	I030700	ISI/PT/PT-106	A-15	ISI	-	-	-	-	-	s	-
B9.11	C	ISI/UT/UT-208	VALVE(700)-TO-PIPE	AUG	-	-	-	-	-	-	-
1	RHR			OWN	-	-	-	-	-	-	-
				PRE	-	-	-	-	-	-	-
B-J	I031000	ISI/PT/PT-106	A-15	ISI	c	-	-	-	-	-	-
B9.11	CSW-1	ISI/UT/UT-208	PIPE-TO-ELBOW	AUG	-	-	-	-	-	-	-
1	RHR	ISI/UT/UT-208		OWN	-	-	-	-	-	-	-
				PRE	-	-	-	-	-	-	-
B-J	I031100		A-15	ISI	-	-	-	-	-	-	-
B9.11	CSW-2		ELBOW-TO-PIPE	AUG	-	-	-	-	-	-	-
1	RHR			OWN	-	-	-	-	-	-	-
				PRE	-	-	-	-	-	-	-
B-J	I031200		A-15	ISI	-	-	-	-	-	-	-
B9.11	CSW-3		PIPE-TO-ELBOW	AUG	-	-	-	-	-	-	-
1	RHR			OWN	-	-	-	-	-	-	-
				PRE	-	-	-	-	-	-	-
B-J	I031300	ISI/PT/PT-106	A-15	ISI	-	-	-	-	-	-	s
B9.11	CSW-4	ISI/UT/UT-208	ELBOW-TO-PIPE	AUG	-	-	-	-	-	-	-
1	RHR			OWN	-	-	-	-	-	-	-
				PRE	-	-	-	-	-	-	-

Category, ItemNO, Class	Summary / CompID / System	Scope / Method / Procedure	Iso No. Comp. Desc. Code Case		Period 1 00	Period 1 02	Period 2 03	Period 2 05	Period 2 06	Period 3 08	Period 3 09
B-J	I031400		A-15	ISI	-	-	-	-	-	-	-
B9.11	CSW-5		PIPE-TO-ELBOW	AUG	-	-	-	-	-	-	-
1	RHR			OWN	-	-	-	-	-	-	-
				PRE	-	-	-	-	-	-	-
B-J	I031500		A-15	ISI	-	-	-	-	-	-	-
B9.11	D		ELBOW-TO-PIPE	AUG	-	-	-	-	-	-	-
1	RHR			OWN	-	-	-	-	-	-	-
				PRE	-	-	-	-	-	-	-
B-J	I031700		A-15	ISI	-	-	-	-	-	-	-
B9.11	DSW-1		PIPE-TO-ELBOW	AUG	-	-	-	-	-	-	-
1	RHR			OWN	-	-	-	-	-	-	-
				PRE	-	-	-	-	-	-	-
B-J	I032200		A-15	ISI	-	-	-	-	-	-	-
B9.11	DSW-2		ELBOW-TO-PIPE	AUG	-	-	-	-	-	-	-
1	RHR			OWN	-	-	-	-	-	-	-
				PRE	-	-	-	-	-	-	-
B-J	I032300		A-15	ISI	-	-	-	-	-	-	-
B9.11	DSW-3		PIPE-TO-PIPE	AUG	-	-	-	-	-	-	-
1	RHR			OWN	-	-	-	-	-	-	-
				PRE	-	-	-	-	-	-	-
B-J	I032400		A-15	ISI	-	-	-	-	-	-	-
B9.11	DSW-4		PIPE-TO-PIPE	AUG	-	-	-	-	-	-	-
1	RHR			OWN	-	-	-	-	-	-	-
				PRE	-	-	-	-	-	-	-
B-J	I032700		A-15	ISI	-	-	-	-	-	-	-
B9.11	DSW-5		PIPE-TO-ELBOW	AUG	-	-	-	-	-	-	-
1	RHR			OWN	-	-	-	-	-	-	-
				PRE	-	-	-	-	-	-	-
B-J	I032800		A-15	ISI	-	-	-	-	-	-	-
B9.11	DSW-6		ELBOW-TO-PIPE	AUG	-	-	-	-	-	-	-
1	RHR			OWN	-	-	-	-	-	-	-
				PRE	-	-	-	-	-	-	-
B-J	I032900		A-15	ISI	-	-	-	-	-	-	-
B9.11	DSW-7		PIPE-TO-ELBOW	AUG	-	-	-	-	-	-	-
1	RHR			OWN	-	-	-	-	-	-	-
				PRE	-	-	-	-	-	-	-
B-J	I033000		A-15	ISI	-	-	-	-	-	-	-
B9.11	E		ELBOW-TO-VALVE(701)	AUG	-	-	-	-	-	-	-
1	RHR			OWN	-	-	-	-	-	-	-
				PRE	-	-	-	-	-	-	-

Category, ItemNO, Class	Summary / CompID / System	Scope / Method / Procedure	Iso No. Comp. Desc. Code Case		Period 1 00	Period 1 02	Period 2 03	Period 2 05	Period 2 06	Period 3 08	Period 3 09
B-J	I033100		A-16	ISI	-	-	-	-	-	-	-
B9.11	E		VALVE(842A)-TO-PIPE	AUG	-	-	-	-	-	-	-
1	HPSI			OWN	-	-	-	-	-	-	-
				PRE	-	-	-	-	-	-	-
B-J	I033200		A-16	ISI	-	-	-	-	-	-	-
B9.11	ESW-1		PIPE-TO-ELBOW	AUG	-	-	-	-	-	-	-
1	HPSI			OWN	-	-	-	-	-	-	-
				PRE	-	-	-	-	-	-	-
B-J	I033300		A-16	ISI	-	-	-	-	-	-	-
B9.11	ESW-2		ELBOW-TO-PIPE	AUG	-	-	-	-	-	-	-
1	HPSI			OWN	-	-	-	-	-	-	-
				PRE	-	-	-	-	-	-	-
B-J	I033400		A-16	ISI	-	-	-	-	-	-	-
B9.11	ESW-3		PIPE-TO-ELBOW	AUG	-	-	-	-	-	-	-
1	HPSI			OWN	-	-	-	-	-	-	-
				PRE	-	-	-	-	-	-	-
B-J	I033500		A-16	ISI	-	-	-	-	-	-	-
B9.11	F		ELBOW-TO-PIPE	AUG	-	-	-	-	-	-	-
1	HPSI			OWN	-	-	-	-	-	-	-
				PRE	-	-	-	-	-	-	-
B-J	I033800	ISI/PT/PT-106	A-16	ISI	-	-	-	s	-	-	-
B9.11	FSW-1	ISI/UT/UT-208	PIPE-TO-ELBOW	AUG	-	-	-	-	-	-	-
1	HPSI			OWN	-	-	-	-	-	-	-
				PRE	-	-	-	-	-	-	-
B-J	I033900		A-16	ISI	-	-	-	-	-	-	-
B9.11	G		ELBOW-TO-TRANSITION	AUG	-	-	-	-	-	-	-
1	HPSI			OWN	-	-	-	-	-	-	-
				PRE	-	-	-	-	-	-	-
B-J	I033950		A-16	ISI	-	-	-	-	-	-	-
B9.11	G1		TRANSITION-TO-PIPE	AUG	-	-	-	-	-	-	-
1	HPSI			OWN	-	-	-	-	-	-	-
				PRE	-	-	-	-	-	-	-
B-J	I034100		A-16	ISI	-	-	-	-	-	-	-
B9.11	GSW-1		PIPE-TO-ELBOW	AUG	-	-	-	-	-	-	-
1	HPSI			OWN	-	-	-	-	-	-	-
				PRE	-	-	-	-	-	-	-
B-J	I034200	ISI/PT/PT-106	A-16	ISI	c	-	-	-	-	-	-
B9.11	GSW-2	ISI/UT/UT-208	ELBOW-TO-PIPE	AUG	-	-	-	-	-	-	-
1	HPSI	ISI/UT/UT-208		OWN	-	-	-	-	-	-	-
				PRE	-	-	-	-	-	-	-

Category, ItemNO, Class	Summary / CompID / System	Scope / Method / Procedure	Iso No. Comp. Desc. Code Case		Period 1 00	Period 1 02	Period 2 03	Period 2 05	Period 2 06	Period 3 08	Period 3 09
B-J	I034300	ISI/UT/UT-208	A-16	ISI	-	-	p	b	-	-	-
B9.11	H	ISI/PT/PT-106	PIPE-TO-VALVE(867A)	AUG	-	-	-	-	-	-	-
1	HPSI	ISI/UT/UT-208		OWN	-	-	-	-	-	-	-
		ISI/UT/UT-208		PRE	-	-	-	-	-	-	-
B-J	I034400		A-16	ISI	-	-	-	-	-	-	-
B9.11	HSW-1		VALVE(867A)-TO-TEE	AUG	-	-	-	-	-	-	-
1	RC			OWN	-	-	-	-	-	-	-
				PRE	-	-	-	-	-	-	-
B-J	I034500		A-17	ISI	-	-	-	-	-	-	-
B9.11	E		VALVE(842B)-TO-PIPE	AUG	-	-	-	-	-	-	-
1	HPSI			OWN	-	-	-	-	-	-	-
				PRE	-	-	-	-	-	-	-
B-J	I034600		A-17	ISI	-	-	-	-	-	-	-
B9.11	F		PIPE-TO-ELBOW	AUG	-	-	-	-	-	-	-
1	HPSI			OWN	-	-	-	-	-	-	-
				PRE	-	-	-	-	-	-	-
B-J	I034700		A-17	ISI	-	-	-	-	-	-	-
B9.11	FSW-1		ELBOW-TO-PIPE	AUG	-	-	-	-	-	-	-
1	HPSI			OWN	-	-	-	-	-	-	-
				PRE	-	-	-	-	-	-	-
B-J	I035000		A-17	ISI	-	-	-	-	-	-	-
B9.11	FSW-2		PIPE-TO-ELBOW	AUG	-	-	-	-	-	-	-
1	HPSI			OWN	-	-	-	-	-	-	-
				PRE	-	-	-	-	-	-	-
B-J	I035100		A-17	ISI	-	-	-	-	-	-	-
B9.11	FSW-3		ELBOW-TO-PIPE	AUG	-	-	-	-	-	-	-
1	HPSI			OWN	-	-	-	-	-	-	-
				PRE	-	-	-	-	-	-	-
B-J	I035300		A-17	ISI	-	-	-	-	-	-	-
B9.11	G		PIPE-TO-ELBOW	AUG	-	-	-	-	-	-	-
1	HPSI			OWN	-	-	-	-	-	-	-
				PRE	-	-	-	-	-	-	-
B-J	I035400	ISI/PT/PT-106	A-17	ISI	-	-	-	-	-	s	-
B9.11	GSW-1	ISI/UT/UT-208	ELBOW-TO-PIPE	AUG	-	-	-	-	-	-	-
1	HPSI			OWN	-	-	-	-	-	-	-
				PRE	-	-	-	-	-	-	-
B-J	I035700		A-17	ISI	-	-	-	-	-	-	-
B9.11	GSW-2		PIPE-TO-ELBOW	AUG	-	-	-	-	-	-	-
1	HPSI			OWN	-	-	-	-	-	-	-
				PRE	-	-	-	-	-	-	-

Category, ItemNO, Class	Summary / CompID / System	Scope / Method / Procedure	Iso No. Comp. Desc. Code Case		Period 1 00	Period 1 02	Period 2 03	Period 2 05	Period 2 06	Period 3 08	Period 3 09
B-J	I035800		A-17	ISI	-	-	-	-	-	-	-
B9.11	GSW-3		ELBOW-TO-PIPE	AUG	-	-	-	-	-	-	-
1	HPSI			OWN	-	-	-	-	-	-	-
				PRE	-	-	-	-	-	-	-
B-J	I035900	ISI/PT/PT-106	A-17	ISI	-	c	-	-	-	-	-
B9.11	H	ISI/UT/UT-208	PIPE-TO-VALVE(867B)	AUG	-	-	-	-	-	-	-
1	HPSI	ISI/UT/UT-102		OWN	-	-	-	-	-	-	-
		ISI/UT/UT-208		PRE	-	-	-	-	-	-	-
B-J	I036000		A-17	ISI	-	-	-	-	-	-	-
B9.11	J		VALVE(867B)-TO-ELBOW	AUG	-	-	-	-	-	-	-
1	RC			OWN	-	-	-	-	-	-	-
				PRE	-	-	-	-	-	-	-
B-J	I036100	ISI/PT/PT-106	A-17	ISI	c	-	-	-	-	-	-
B9.11	K	ISI/UT/UT-208	ELBOW-TO-NOZZLE	AUG	-	-	-	-	-	-	-
1	RC			OWN	-	-	-	-	-	-	-
				PRE	-	-	-	-	-	-	-
B-J	I036200	ISI/PT/PT-106	A-18	ISI	-	c	-	-	-	-	-
B9.11	J	ISI/UT/UT-208	VALVE(852B)-TO-PIPE	AUG	-	-	-	-	-	-	-
1	RC			OWN	-	-	-	-	-	-	-
				PRE	-	-	-	-	-	-	-
B-J	I036300		A-18	ISI	-	-	-	-	-	-	-
B9.11	JSW-1		PIPE-TO-ELBOW	AUG	-	-	-	-	-	-	-
1	RC			OWN	-	-	-	-	-	-	-
				PRE	-	-	-	-	-	-	-
B-J	I036600		A-18	ISI	-	-	-	-	-	-	-
B9.11	HSW-2		ELBOW-TO-VALVE(853B)	AUG	-	-	-	-	-	-	-
1	RC			OWN	-	-	-	-	-	-	-
				PRE	-	-	-	-	-	-	-
B-J	I036700		A-18	ISI	-	-	-	-	-	-	-
B9.11	HSW-1		VALVE(853B)-TO-ELBOW	AUG	-	-	-	-	-	-	-
1	RC			OWN	-	-	-	-	-	-	-
				PRE	-	-	-	-	-	-	-
B-J	I036800	ISI/PT/PT-106	A-18	ISI	c	-	-	-	-	-	-
B9.11	H	ISI/UT/UT-208	ELBOW-TO-PIPE	AUG	-	-	-	-	-	-	-
1	RC	ISI/UT/UT-208		OWN	-	-	-	-	-	-	-
				PRE	-	-	-	-	-	-	-
B-J	I036900		A-18	ISI	-	-	-	-	-	-	-
B9.11	G		PIPE-TO-ELBOW	AUG	-	-	-	-	-	-	-
1	RC			OWN	-	-	-	-	-	-	-
				PRE	-	-	-	-	-	-	-

Category, ItemNO, Class	Summary / CompID / System	Scope / Method / Procedure	Iso No. Comp. Desc. Code Case		Period 1 00	Period 1 02	Period 2 03	Period 2 05	Period 2 06	Period 3 08	Period 3 09
B-J	I037000		A-18	ISI	-	-	-	-	-	-	-
B9.11	F		ELBOW-TO-PIPE	AUG	-	-	-	-	-	-	-
1	RC			OWN	-	-	-	-	-	-	-
				PRE	-	-	-	-	-	-	-
B-J	I037600		A-14	ISI	-	-	-	-	-	-	-
B9.11	J		VALVE(852A)-TO-ELBOW	AUG	-	-	-	-	-	-	-
1	RC			OWN	-	-	-	-	-	-	-
				PRE	-	-	-	-	-	-	-
B-J	I037900		A-14	ISI	-	-	-	-	-	-	-
B9.11	H		ELBOW-TO-VALVE(853A)	AUG	-	-	-	-	-	-	-
1	RC			OWN	-	-	-	-	-	-	-
				PRE	-	-	-	-	-	-	-
B-J	I038000		A-14	ISI	-	-	-	-	-	-	-
B9.11	G		VALVE(853A)-TO-ELBOW	AUG	-	-	-	-	-	-	-
1	RC			OWN	-	-	-	-	-	-	-
				PRE	-	-	-	-	-	-	-
B-J	I038100	ISI/PT/PT-106	A-14	ISI	-	-	-	s	-	-	-
B9.11	F	ISI/UT/UT-208	ELBOW-TO-PIPE	AUG	-	-	-	-	-	-	-
1	RC			OWN	-	-	-	-	-	-	-
				PRE	-	-	-	-	-	-	-
B-J	I014600	ISI/PT/PT-106	A-10	ISI	-	-	-	-	-	s	-
B9.21	A	OWN/UT/UT-208	NOZZLE-TO-PIPE	AUG	-	-	-	-	-	-	-
1	PZR			OWN	-	-	-	-	-	s	-
				PRE	-	-	-	-	-	-	-
B-J	I014650		A-10	ISI	-	-	-	-	-	-	-
B9.21	A1		PIPE-TO-ELBOW	AUG	-	-	-	-	-	-	-
1	PZR			OWN	-	-	-	-	-	-	-
				PRE	-	-	-	-	-	-	-
B-J	I014700		A-10	ISI	-	-	-	-	-	-	-
B9.21	ASW-1		ELBOW-TO-PIPE	AUG	-	-	-	-	-	-	-
1	PZR			OWN	-	-	-	-	-	-	-
				PRE	-	-	-	-	-	-	-
B-J	I014900		A-10	ISI	-	-	-	-	-	-	-
B9.21	ASW-2		PIPE-TO-ELBOW	AUG	-	-	-	-	-	-	-
1	PZR			OWN	-	-	-	-	-	-	-
				PRE	-	-	-	-	-	-	-
B-J	I015000		A-10	ISI	-	-	-	-	-	-	-
B9.21	ASW-3		ELBOW-TO-PIPE	AUG	-	-	-	-	-	-	-
1	PZR			OWN	-	-	-	-	-	-	-
				PRE	-	-	-	-	-	-	-

Category, ItemNO, Class	Summary / CompID / System	Scope / Method / Procedure	Iso No. Comp. Desc. Code Case		Period 1 00	Period 1 02	Period 2 03	Period 2 05	Period 2 06	Period 3 08	Period 3 09
B-J	I015200	ISI/PT/PT-106	A-10	ISI	-	-	-	-	-	s	-
B9.21	ASW-4	OWN/UT/UT-208	PIPE-TO-ELBOW	AUG	-	-	-	-	-	-	-
1	PZR			OWN	-	-	-	-	-	s	-
				PRE	-	-	-	-	-	-	-
B-J	I015300		A-10	ISI	-	-	-	-	-	-	-
B9.21	B		ELBOW-TO-PIPE	AUG	-	-	-	-	-	-	-
1	PZR			OWN	-	-	-	-	-	-	-
				PRE	-	-	-	-	-	-	-
B-J	I015400	ISI/PT/PT-106	A-10	ISI	-	-	-	s	-	-	-
B9.21	BSW-1	OWN/UT/UT-208	PIPE-TO-ELBOW	AUG	-	-	-	-	-	-	-
1	PZR			OWN	-	-	-	s	-	-	-
				PRE	-	-	-	-	-	-	-
B-J	I015500		A-10	ISI	-	-	-	-	-	-	-
B9.21	C		ELBOW-TO-PIPE	AUG	-	-	-	-	-	-	-
1	PZR			OWN	-	-	-	-	-	-	-
				PRE	-	-	-	-	-	-	-
B-J	I015610		A-10	ISI	-	-	-	-	-	-	-
B9.21	CC		PIPE-TO-BENT PIPE	AUG	-	-	-	-	-	-	-
1	PZR			OWN	-	-	-	-	-	-	-
				PRE	-	-	-	-	-	-	-
B-J	I016200	ISI/PT/PT-106	A-10	ISI	-	-	-	-	-	s	-
B9.21	CSW-3	OWN/UT/UT-208	PIPE-TO-ELBOW	AUG	-	-	-	-	-	-	-
1	PZR			OWN	-	-	-	-	-	s	-
				PRE	-	-	-	-	-	-	-
B-J	I016300		A-10	ISI	-	-	-	-	-	-	-
B9.21	D		ELBOW-TO-PIPE	AUG	-	-	-	-	-	-	-
1	PZR			OWN	-	-	-	-	-	-	-
				PRE	-	-	-	-	-	-	-
B-J	I016400		A-10	ISI	-	-	-	-	-	-	-
B9.21	DSW-1A		PIPE-TO-ELBOW	AUG	-	-	-	-	-	-	-
1	PZR			OWN	-	-	-	-	-	-	-
				PRE	-	-	-	-	-	-	-
B-J	I016500		A-10	ISI	-	-	-	-	-	-	-
B9.21	DSW-1		ELBOW-TO-PIPE	AUG	-	-	-	-	-	-	-
1	PZR			OWN	-	-	-	-	-	-	-
				PRE	-	-	-	-	-	-	-
B-J	I016700	ISI/PT/PT-106	A-10	ISI	-	-	-	-	-	s	-
B9.21	DSW-2	OWN/UT/UT-208	PIPE-TO-ELBOW	AUG	-	-	-	-	-	-	-
1	PZR			OWN	-	-	-	-	-	s	-
				PRE	-	-	-	-	-	-	-

Category, ItemNO, Class	Summary / CompID / System	Scope / Method / Procedure	Iso No. Comp. Desc. Code Case		Period 1 00	Period 1 02	Period 2 03	Period 2 05	Period 2 06	Period 3 08	Period 3 09
B-J	I016800		A-10	ISI	-	-	-	-	-	-	-
B9.21	DSW-3		ELBOW-TO-PIPE	AUG	-	-	-	-	-	-	-
1	PZR			OWN	-	-	-	-	-	-	-
				PRE	-	-	-	-	-	-	-
B-J	I016900		A-10	ISI	-	-	-	-	-	-	-
B9.21	E		PIPE-TO-PIPE	AUG	-	-	-	-	-	-	-
1	PZR			OWN	-	-	-	-	-	-	-
				PRE	-	-	-	-	-	-	-
B-J	I017000		A-10	ISI	-	-	-	-	-	-	-
B9.21	ESW-1		PIPE-TO-ELBOW	AUG	-	-	-	-	-	-	-
1	PZR			OWN	-	-	-	-	-	-	-
				PRE	-	-	-	-	-	-	-
B-J	I017200		A-10	ISI	-	-	-	-	-	-	-
B9.21	F		ELBOW-TO-ELBOW	AUG	-	-	-	-	-	-	-
1	PZR			OWN	-	-	-	-	-	-	-
				PRE	-	-	-	-	-	-	-
B-J	I017300		A-10	ISI	-	-	-	-	-	-	-
B9.21	FSW-1		ELBOW-TO-ELBOW	AUG	-	-	-	-	-	-	-
1	PZR			OWN	-	-	-	-	-	-	-
				PRE	-	-	-	-	-	-	-
B-J	I017400		A-10	ISI	-	-	-	-	-	-	-
B9.21	FSW-2		ELBOW-TO-PIPE	AUG	-	-	-	-	-	-	-
1	PZR			OWN	-	-	-	-	-	-	-
				PRE	-	-	-	-	-	-	-
B-J	I017600		A-10	ISI	-	-	-	-	-	-	-
B9.21	FSW-3		PIPE-TO-ELBOW	AUG	-	-	-	-	-	-	-
1	PZR			OWN	-	-	-	-	-	-	-
				PRE	-	-	-	-	-	-	-
B-J	I017800		A-9	ISI	-	-	-	-	-	-	-
B9.21	G		ELBOW-TO-PIPE	AUG	-	-	-	-	-	-	-
1	PZR			OWN	-	-	-	-	-	-	-
				PRE	-	-	-	-	-	-	-
B-J	I018000		A-9	ISI	-	-	-	-	-	-	-
B9.21	GSW-1		PIPE-TO-ELBOW	AUG	-	-	-	-	-	-	-
1	PZR			OWN	-	-	-	-	-	-	-
				PRE	-	-	-	-	-	-	-
B-J	I018100		A-9	ISI	-	-	-	-	-	-	-
B9.21	J		ELBOW-TO-VALVE(431A)	AUG	-	-	-	-	-	-	-
1	PZR			OWN	-	-	-	-	-	-	-
				PRE	-	-	-	-	-	-	-

Category, ItemNO, Class	Summary / CompID / System	Scope / Method / Procedure	Iso No. Comp. Desc. Code Case		Period 1 00	Period 1 02	Period 2 03	Period 2 05	Period 2 06	Period 3 08	Period 3 09
B-J	I018200		A-9	ISI	-	-	-	-	-	-	-
B9.21	H		VALVE(431A)-TO-TEE	AUG	-	-	-	-	-	-	-
1	PZR			OWN	-	-	-	-	-	-	-
				PRE	-	-	-	-	-	-	-
B-J	I018300		A-9	ISI	-	-	-	-	-	-	-
B9.21	HSW-1		TEE-TO-PIPE	AUG	-	-	-	-	-	-	-
1	PZR			OWN	-	-	-	-	-	-	-
				PRE	-	-	-	-	-	-	-
B-J	I018500		A-9	ISI	-	-	-	-	-	-	-
B9.21	K-1		PIPE-TO-PIPE	AUG	-	-	-	-	-	-	-
1	PZR			OWN	-	-	-	-	-	-	-
				PRE	-	-	-	-	-	-	-
B-J	I018600		A-9	ISI	-	-	-	-	-	-	-
B9.21	K		PIPE-TO-ELBOW	AUG	-	-	-	-	-	-	-
1	PZR			OWN	-	-	-	-	-	-	-
				PRE	-	-	-	-	-	-	-
B-J	I018800		A-9	ISI	-	-	-	-	-	-	-
B9.21	K-2		ELBOW-TO-PIPE	AUG	-	-	-	-	-	-	-
1	PZR			OWN	-	-	-	-	-	-	-
				PRE	-	-	-	-	-	-	-
B-J	I018900		A-9	ISI	-	-	-	-	-	-	-
B9.21	L		PIPE-TO-TEE	AUG	-	-	-	-	-	-	-
1	PZR			OWN	-	-	-	-	-	-	-
				PRE	-	-	-	-	-	-	-
B-J	I019000		A-9	ISI	-	-	-	-	-	-	-
B9.21	LSW-1		TEE-TO-PIPE	AUG	-	-	-	-	-	-	-
1	PZR			OWN	-	-	-	-	-	-	-
				PRE	-	-	-	-	-	-	-
B-J	I019200		A-9	ISI	-	-	-	-	-	-	-
B9.21	LSW-2		PIPE-TO-PIPE	AUG	-	-	-	-	-	-	-
1	PZR			OWN	-	-	-	-	-	-	-
				PRE	-	-	-	-	-	-	-
B-J	I019300		A-9	ISI	-	-	-	-	-	-	-
B9.21	LSW-3		PIPE-TO-ELBOW	AUG	-	-	-	-	-	-	-
1	PZR			OWN	-	-	-	-	-	-	-
				PRE	-	-	-	-	-	-	-
B-J	I019400		A-9	ISI	-	-	-	-	-	-	-
B9.21	LSW-3A		ELBOW-TO-ELBOW	AUG	-	-	-	-	-	-	-
1	PZR			OWN	-	-	-	-	-	-	-
				PRE	-	-	-	-	-	-	-

Category, ItemNO, Class	Summary / CompID / System	Scope / Method / Procedure	Iso No. Comp. Desc. Code Case		Period 1 00	Period 1 02	Period 2 03	Period 2 05	Period 2 06	Period 3 08	Period 3 09
B-J	I019500		A-9	ISI	-	-	-	-	-	-	-
B9.21	LSW-4		ELBOW-TO-PIPE	AUG	-	-	-	-	-	-	-
1	PZR			OWN	-	-	-	-	-	-	-
				PRE	-	-	-	-	-	-	-
B-J	I019600	OWN/RT/RT-104	A-9	ISI	-	-	c	-	-	-	-
B9.21	M-1	ISI/PT/PT-106	PIPE-TO-REDUCER	AUG	-	-	-	-	-	-	-
1	PZR			OWN	-	-	c	-	-	-	-
				PRE	-	-	-	-	-	-	-
B-J	I019800	ISI/PT/PT-106	A-10	ISI	-	-	-	s	-	-	-
B9.21	A	OWN/UT/UT-208	NOZZLE-TO-PIPE	AUG	-	-	-	-	-	-	-
1	PZR			OWN	-	-	-	s	-	-	-
				PRE	-	-	-	-	-	-	-
B-J	I020000		A-10	ISI	-	-	-	-	-	-	-
B9.21	B		PIPE-TO-ELBOW	AUG	-	-	-	-	-	-	-
1	PZR			OWN	-	-	-	-	-	-	-
				PRE	-	-	-	-	-	-	-
B-J	I020100		A-10	ISI	-	-	-	-	-	-	-
B9.21	C		ELBOW-TO-PIPE	AUG	-	-	-	-	-	-	-
1	PZR			OWN	-	-	-	-	-	-	-
				PRE	-	-	-	-	-	-	-
B-J	I020500		A-10	ISI	-	-	-	-	-	-	-
B9.21	CSW-1		PIPE-TO-PIPE	AUG	-	-	-	-	-	-	-
1	PZR			OWN	-	-	-	-	-	-	-
				PRE	-	-	-	-	-	-	-
B-J	I020600		A-10	ISI	-	-	-	-	-	-	-
B9.21	D		PIPE-TO-ELBOW	AUG	-	-	-	-	-	-	-
1	PZR			OWN	-	-	-	-	-	-	-
				PRE	-	-	-	-	-	-	-
B-J	I020700		A-10	ISI	-	-	-	-	-	-	-
B9.21	DSW-5		ELBOW-TO-PIPE	AUG	-	-	-	-	-	-	-
1	PZR			OWN	-	-	-	-	-	-	-
				PRE	-	-	-	-	-	-	-
B-J	I020800		A-10	ISI	-	-	-	-	-	-	-
B9.21	DSW-1		PIPE-TO-ELBOW	AUG	-	-	-	-	-	-	-
1	PZR			OWN	-	-	-	-	-	-	-
				PRE	-	-	-	-	-	-	-
B-J	I021000		A-10	ISI	-	-	-	-	-	-	-
B9.21	DSW-2		ELBOW-TO-PIPE	AUG	-	-	-	-	-	-	-
1	PZR			OWN	-	-	-	-	-	-	-
				PRE	-	-	-	-	-	-	-

Category, ItemNO, Class	Summary / CompID / System	Scope / Method / Procedure	Iso No. Comp. Desc. Code Case		Period 1 00	Period 1 02	Period 2 03	Period 2 05	Period 2 06	Period 3 08	Period 3 09
B-J	I021040	PSI/PT/PT-106	A-10	ISI	-	-	-	-	-	-	-
B9.21	DSW-2A	PSI/UT/UT-208	PIPE-TO-ELBOW	AUG	-	-	-	-	-	-	-
1	PZR			OWN	-	-	-	-	-	-	-
				PRE	-	-	-	-	-	-	-
B-J	I021060		A-10	ISI	-	-	-	-	-	-	-
B9.21	DSW-2B		ELBOW-TO-PIPE	AUG	-	-	-	-	-	-	-
1	PZR			OWN	-	-	-	-	-	-	-
				PRE	-	-	-	-	-	-	-
B-J	I021100	ISI/PT/PT-106	A-10	ISI	-	c	-	-	-	-	-
B9.21	DSW-3	OWN/UT/UT-208	PIPE-TO-ELBOW	AUG	-	-	-	-	-	-	-
1	PZR			OWN	-	-	-	s	-	-	-
				PRE	-	-	-	-	-	-	-
B-J	I021200	ISI/PT/PT-106	A-10	ISI	-	-	c	-	-	-	-
B9.21	DSW-4	OWN/UT/UT-208	ELBOW-TO-PIPE	AUG	-	-	-	-	-	-	-
1	PZR	OWN/UT/UT-208		OWN	-	-	c	-	-	-	-
				PRE	-	-	-	-	-	-	-
B-J	I021400		A-10	ISI	-	-	-	-	-	-	-
B9.21	DSW-6		PIPE-TO-ELBOW	AUG	-	-	-	-	-	-	-
1	PZR			OWN	-	-	-	-	-	-	-
				PRE	-	-	-	-	-	-	-
B-J	I021600		A-9	ISI	-	-	-	-	-	-	-
B9.21	E		ELBOW-TO-PIPE	AUG	-	-	-	-	-	-	-
1	PZR			OWN	-	-	-	-	-	-	-
				PRE	-	-	-	-	-	-	-
B-J	I021800	ISI/PT/PT-106	A-9	ISI	-	-	c	-	-	-	-
B9.21	ESW-1	OWN/UT/UT-208	PIPE-TO-ELBOW	AUG	-	-	-	-	-	-	-
1	PZR			OWN	-	-	c	-	-	-	-
				PRE	-	-	-	-	-	-	-
B-J	I021900		A-9	ISI	-	-	-	-	-	-	-
B9.21	F		ELBOW-TO-VALVE(431B)	AUG	-	-	-	-	-	-	-
1	PZR			OWN	-	-	-	-	-	-	-
				PRE	-	-	-	-	-	-	-
B-J	I022000		A-9	ISI	-	-	-	-	-	-	-
B9.21	G		VALVE(431B)-TO-TEE	AUG	-	-	-	-	-	-	-
1	PZR			OWN	-	-	-	-	-	-	-
				PRE	-	-	-	-	-	-	-
B-J	I026100		A-9	ISI	-	-	-	-	-	-	-
B9.21	L-1		REDUCER-TO-TEE	AUG	-	-	-	-	-	-	-
1	PZR			OWN	-	-	-	-	-	-	-
				PRE	-	-	-	-	-	-	-

Category, ItemNO, Class	Summary / CompID / System	Scope / Method / Procedure	Iso No. Comp. Desc. Code Case		Period 1 00	Period 1 02	Period 2 03	Period 2 05	Period 2 06	Period 3 08	Period 3 09
B-J	I026600	ISI/PT/PT-106	A-12	ISI	-	-	-	s	-	-	-
B9.21	C		REDUCER-TO-VALVE(515)	AUG	-	-	-	-	-	-	-
1	PZR			OWN	-	-	-	-	-	-	-
				PRE	-	-	-	-	-	-	-
B-J	I026700		A-12	ISI	-	-	-	-	-	-	-
B9.21	D		VALVE(515)-TO-PIPE	AUG	-	-	-	-	-	-	-
1	PZR			OWN	-	-	-	-	-	-	-
				PRE	-	-	-	-	-	-	-
B-J	I026750		A-12	ISI	-	-	-	-	-	-	-
B9.21	D1M		PIPE-TO-PIPE	AUG	-	-	-	-	-	-	-
1	PZR			OWN	-	-	-	-	-	-	-
				PRE	-	-	-	-	-	-	-
B-J	I026800		A-12	ISI	-	-	-	-	-	-	-
B9.21	EM		PIPE-TO-VALVE(431C)	AUG	-	-	-	-	-	-	-
1	PZR			OWN	-	-	-	-	-	-	-
				PRE	-	-	-	-	-	-	-
B-J	I027000	ISI/PT/PT-106	A-12	ISI	-	-	-	-	-	s	-
B9.21	B		REDUCER-TO-VALVE(516)	AUG	-	-	-	-	-	-	-
1	PZR			OWN	-	-	-	-	-	-	-
				PRE	-	-	-	-	-	-	-
B-J	I027100	ISI/PT/PT-106	A-12	ISI	-	-	-	-	-	s	-
B9.21	C	OWN/UT/UT-208	VALVE(516)-TO-PIPE	AUG	-	-	-	-	-	-	-
1	PZR			OWN	-	-	-	-	-	s	-
				PRE	-	-	-	-	-	-	-
B-J	I027150		A-12	ISI	-	-	-	-	-	-	-
B9.21	C1M		PIPE-TO-PIPE	AUG	-	-	-	-	-	-	-
1	PZR			OWN	-	-	-	-	-	-	-
				PRE	-	-	-	-	-	-	-
B-J	I027200	ISI/PT/PT-106	A-12	ISI	-	-	-	-	-	s	-
B9.21	DM	OWN/UT/UT-208	PIPE-TO-VALVE(430)	AUG	-	-	-	-	-	-	-
1	PZR			OWN	-	-	-	-	-	s	-
				PRE	-	-	-	-	-	-	-
B-J	I027300		A-13	ISI	-	-	-	-	-	-	-
B9.21	H		SAFE END-TO-REDUCER (3")	AUG	-	-	-	-	-	-	-
1	PZR			OWN	-	-	-	-	-	-	-
				PRE	-	-	-	-	-	-	-
B-J	I028100		A-13	ISI	-	-	-	-	-	-	-
B9.21	R		SAFE END-TO-REDUCER (3")	AUG	-	-	-	-	-	-	-
1	PZR			OWN	-	-	-	-	-	-	-
				PRE	-	-	-	-	-	-	-

Category, ItemNO, Class	Summary / CompID / System	Scope / Method / Procedure	Iso No. Comp. Desc. Code Case		Period 1 00	Period 1 02	Period 2 03	Period 2 05	Period 2 06	Period 3 08	Period 3 09
B-J	I011000	ISI/PT/PT-106	A-3-1A	ISI	-	-	-	s	-	-	-
B9.31	PL-FW-II/10A-RC0-2501-A	ISI/UT/UT-208	10" BRANCH WELD	AUG	-	-	-	-	-	-	-
1	RC			OWN	-	-	-	-	-	-	-
				PRE	-	-	-	-	-	-	-
B-J	I012400		A-3-1C	ISI	-	-	-	-	-	-	-
B9.31	PL-FW-VI/10B-RC0-2501-A		10" BRANCH WELD	AUG	-	-	-	-	-	-	-
1	RC			OWN	-	-	-	-	-	-	-
				PRE	-	-	-	-	-	-	-
B-J	I012600		A-3-2A	ISI	-	-	-	-	-	-	-
B9.31	PL-FW-IV/10-RC8-2501		10" BRANCH WELD	AUG	-	-	-	-	-	-	-
1	RC			OWN	-	-	-	-	-	-	-
				PRE	-	-	-	-	-	-	-
B-J	I013900		A-3-2C	ISI	-	-	-	-	-	-	-
B9.31	PL-FW-VII/10A-RC0-2501-B		10" BRANCH WELD	AUG	-	-	-	-	-	-	-
1	RC			OWN	-	-	-	-	-	-	-
				PRE	-	-	-	-	-	-	-
B-J	I011100		A-3-1A	ISI	-	-	-	-	-	-	-
B9.32	PL-FW-II/2C-RC0-2501-A		2" BRANCH WELD	AUG	-	-	-	-	-	-	-
1	RC			OWN	-	-	-	-	-	-	-
				PRE	-	-	-	-	-	-	-
B-J	I011700		A-3-1B	ISI	-	-	-	-	-	-	-
B9.32	PL-FW-XII-ASW/2B-RC0-2501-A		2" BRANCH WELD	AUG	-	-	-	-	-	-	-
1	RC			OWN	-	-	-	-	-	-	-
				PRE	-	-	-	-	-	-	-
B-J	I012200		A-3-1C	ISI	-	-	-	-	-	-	-
B9.32	PL-FW-VI/2A-RC0-2501-A		2" BRANCH WELD	AUG	-	-	-	-	-	-	-
1	RC			OWN	-	-	-	-	-	-	-
				PRE	-	-	-	-	-	-	-
B-J	I012300		A-3-1C	ISI	-	-	-	-	-	-	-
B9.32	PL-FW-VI/3A-RC8-2501-A		3" BRANCH WELD	AUG	-	-	-	-	-	-	-
1	RC			OWN	-	-	-	-	-	-	-
				PRE	-	-	-	-	-	-	-
B-J	I012500		A-3-2A	ISI	-	-	-	-	-	-	-
B9.32	PL-FW-IV/2D-RC0-2501-B		2" BRANCH WELD	AUG	-	-	-	-	-	-	-
1	RC			OWN	-	-	-	-	-	-	-
				PRE	-	-	-	-	-	-	-
B-J	I012700		A-3-2A	ISI	-	-	-	-	-	-	-
B9.32	PL-FW-IV/2B-RC0-2501-B		2" BRANCH WELD	AUG	-	-	-	-	-	-	-
1	RC			OWN	-	-	-	-	-	-	-
				PRE	-	-	-	-	-	-	-

Category, ItemNO, Class	Summary / CompID / System	Scope / Method / Procedure	Iso No. Comp. Desc. Code Case		Period 1 00	Period 1 02	Period 2 03	Period 2 05	Period 2 06	Period 3 08	Period 3 09
B-J	I013200		A-3-2B	ISI	-	-	-	-	-	-	-
B9.32	PL-FW-XIV-BSW/2A-RC0-2501-B		2" BRANCH WELD	AUG	-	-	-	-	-	-	-
1	RC			OWN	-	-	-	-	-	-	-
				PRE	-	-	-	-	-	-	-
B-J	I013700	ISI/PT/PT-106	A-3-2C	ISI	c	-	-	-	-	-	-
B9.32	PL-FW-VIII/2C-RC0-2501-B		2" BRANCH WELD	AUG	-	-	-	-	-	-	-
1	RC			OWN	-	-	-	-	-	-	-
				PRE	-	-	-	-	-	-	-
B-J	I013800		A-3-2C	ISI	-	-	-	-	-	-	-
B9.32	PL-FW-VIII/3A-RC8-2501-B		3" BRANCH WELD	AUG	-	-	-	-	-	-	-
1	RC			OWN	-	-	-	-	-	-	-
				PRE	-	-	-	-	-	-	-
B-J	I035600		A-17	ISI	-	-	-	-	-	-	-
B9.32	GSW-1A/2A-SI2-2501		2" BRANCH WELD	AUG	-	-	-	-	-	-	-
1	HPSI			OWN	-	-	-	-	-	-	-
				PRE	-	-	-	-	-	-	-
B-J	I010200		A-8	ISI	-	-	-	-	-	-	-
B9.40	RHE-14		NOZZLE(N3)-TO-PIPE	AUG	-	-	-	-	-	-	-
1	CVCS-LTDN			OWN	-	-	-	-	-	-	-
				PRE	-	-	-	-	-	-	-
B-J	I010500		A-8	ISI	-	-	-	-	-	-	-
B9.40	RHE-15		PIPE-TO-NOZZLE(N8)	AUG	-	-	-	-	-	-	-
1	CVCS-LTDN			OWN	-	-	-	-	-	-	-
				PRE	-	-	-	-	-	-	-
B-J	I010600		A-8	ISI	-	-	-	-	-	-	-
B9.40	RHE-16		NOZZLE(N2)-TO-PIPE	AUG	-	-	-	-	-	-	-
1	CVCS-LTDN			OWN	-	-	-	-	-	-	-
				PRE	-	-	-	-	-	-	-
B-J	I010900		A-8	ISI	-	-	-	-	-	-	-
B9.40	RHE-17		PIPE-TO-NOZZLE(N5)	AUG	-	-	-	-	-	-	-
1	CVCS-LTDN			OWN	-	-	-	-	-	-	-
				PRE	-	-	-	-	-	-	-
B-J	I022650		A-11	ISI	-	-	-	-	-	-	-
B9.40	7A		VALVE(9313)-TO PIPE	AUG	-	-	-	-	-	-	-
1	CVCS-CHRG			OWN	-	-	-	-	-	-	-
				PRE	-	-	-	-	-	-	-
B-J	I022900	ISI/PT/PT-106	A-11	ISI	-	-	-	-	-	s	-
B9.40	8	OWN/PT/PT-106	PIPE-TO-TEE	AUG	-	-	-	-	-	-	-
1	CVCS-CHRG			OWN	-	-	c	-	-	-	-
				PRE	-	-	-	-	-	-	-

Category, ItemNO, Class	Summary / CompID / System	Scope / Method / Procedure	Iso No. Comp. Desc. Code Case		Period 1 00	Period 1 02	Period 2 03	Period 2 05	Period 2 06	Period 3 08	Period 3 09
B-J	I022950	OWN/PT/PT-106	A-11	ISI	-	-	-	-	-	-	-
B9.40	8A		TEE-TO-REDUCER	AUG	-	-	-	-	-	-	-
1	CVCS-CHRG			OWN	-	-	c	-	-	-	-
				PRE	-	-	-	-	-	-	-
B-J	I023000	ISI/PT/PT-106	A-11	ISI	c.	-	-	-	-	-	-
B9.40	9	OWN/PT/PT-106	TEE-TO-PIPE	AUG	-	-	-	-	-	-	-
1	CVCS-CHRG			OWN	-	-	c	-	-	-	-
				PRE	-	-	-	-	-	-	-
B-J	I023500	ISI/PT/PT-106	A-11	ISI	-	-	-	-	-	s	-
B9.40	10	OWN/PT/PT-106	PIPE-TO-ELBOW	AUG	-	-	-	-	-	-	-
1	CVCS-CHRG	PSI/PT/PT-106		OWN	-	-	c	-	-	-	-
				PRE	-	-	c	-	-	-	-
B-J	I023600	ISI/PT/PT-106	A-11	ISI	-	-	c	-	-	-	-
B9.40	11		ELBOW-TO-PIPE	AUG	-	-	-	-	-	-	-
1	CVCS-CHRG			OWN	-	-	-	-	-	-	-
				PRE	-	-	-	-	-	-	-
B-J	I023700	OWN/PT/PT-106	A-11	ISI	-	-	-	-	-	-	-
B9.40	12		PIPE-TO-ELBOW	AUG	-	-	-	-	-	-	-
1	CVCS-CHRG			OWN	-	-	c	-	-	-	-
				PRE	-	-	-	-	-	-	-
B-J	I023800	OWN/PT/PT-106	A-11	ISI	-	-	-	-	-	-	-
B9.40	13		ELBOW-TO-PIPE	AUG	-	-	-	-	-	-	-
1	CVCS-CHRG			OWN	-	-	c	-	-	-	-
				PRE	-	-	-	-	-	-	-
B-J	I024000	ISI/PT/PT-106	A-11	ISI	-	-	-	s	-	-	-
B9.40	14	OWN/PT/PT-106	PIPE-TO-COUPLING	AUG	-	-	-	-	-	-	-
1	CVCS-CHRG			OWN	-	-	c	-	-	-	-
				PRE	-	-	-	-	-	-	-
B-J	I024100	OWN/PT/PT-106	A-11	ISI	-	-	-	-	-	-	-
B9.40	15		COUPLING-TO-PIPE	AUG	-	-	-	-	-	-	-
1	CVCS-CHRG			OWN	-	-	c	-	-	-	-
				PRE	-	-	-	-	-	-	-
B-J	I024300	OWN/PT/PT-106	A-11	ISI	-	-	-	-	-	-	-
B9.40	16		PIPE-TO-ELBOW	AUG	-	-	-	-	-	-	-
1	CVCS-CHRG			OWN	-	-	c	-	-	-	-
				PRE	-	-	-	-	-	-	-
B-J	I024400	ISI/PT/PT-106	A-11	ISI	-	-	-	-	-	s	-
B9.40	17	OWN/PT/PT-106	ELBOW-TO-PIPE	AUG	-	-	-	-	-	-	-
1	CVCS-CHRG			OWN	-	-	c	-	-	-	-
				PRE	-	-	-	-	-	-	-

Category, ItemNO, Class	Summary / CompID / System	Scope / Method / Procedure	Iso No. Comp. Desc. Code Case		Period 1 00	Period 1 02	Period 2 03	Period 2 05	Period 2 06	Period 3 08	Period 3 09
B-J	I025000	ISI/PT/PT-106	A-11	ISI	-	-	-	-	-	s	-
B9.40	18	OWN/PT/PT-106	PIPE-TO-COUPLING	AUG	-	-	-	-	-	-	-
1	CVCS-CHRG			OWN	-	-	c	-	-	-	-
				PRE	-	-	-	-	-	-	-
B-J	I025100	ISI/PT/PT-106	A-11	ISI	-	-	-	-	s	-	-
B9.40	19	OWN/PT/PT-106	COUPLING-TO-PIPE	AUG	-	-	-	-	-	-	-
1	CVCS-CHRG			OWN	-	-	c	-	-	-	-
				PRE	-	-	-	-	-	-	-
B-J	I025200	ISI/PT/PT-106	A-11	ISI	c	-	-	-	-	-	-
B9.40	20		PIPE-TO-ELBOW	AUG	-	-	-	-	-	-	-
1	CVCS-CHRG			OWN	-	-	-	-	-	-	-
				PRE	-	-	-	-	-	-	-
B-J	I025300	ISI/PT/PT-106	A-11	ISI	-	-	-	s	-	-	-
B9.40	21		ELBOW-TO-PIPE	AUG	-	-	-	-	-	-	-
1	CVCS-CHRG			OWN	-	-	-	-	-	-	-
				PRE	-	-	-	-	-	-	-
B-J	I025400	ISI/PT/PT-106	A-11	ISI	-	-	-	s	-	-	-
B9.40	22		PIPE-TO-VALVE(297)	AUG	-	-	-	-	-	-	-
1	CVCS-CHRG			OWN	-	-	-	-	-	-	-
				PRE	-	-	-	-	-	-	-
B-J	I025500		A-11	ISI	-	-	-	-	-	-	-
B9.40	23		VALVE(297)-TO-PIPE	AUG	-	-	-	-	-	-	-
1	PZR			OWN	-	-	-	-	-	-	-
				PRE	-	-	-	-	-	-	-
B-J	I025700		A-11	ISI	-	-	-	-	-	-	-
B9.40	24		PIPE-TO-ELBOW	AUG	-	-	-	-	-	-	-
1	PZR			OWN	-	-	-	-	-	-	-
				PRE	-	-	-	-	-	-	-
B-J	I025800		A-11	ISI	-	-	-	-	-	-	-
B9.40	25		ELBOW-TO-PIPE	AUG	-	-	-	-	-	-	-
1	PZR			OWN	-	-	-	-	-	-	-
				PRE	-	-	-	-	-	-	-
B-J	I025850		A-11	ISI	-	-	-	-	-	-	-
B9.40	25A		PIPE-TO-ELBOW	AUG	-	-	-	-	-	-	-
1	PZR			OWN	-	-	-	-	-	-	-
				PRE	-	-	-	-	-	-	-
B-J	I025900	ISI/PT/PT-106	A-11	ISI	-	-	-	-	-	s	-
B9.40	26		ELBOW-TO-PIPE	AUG	-	-	-	-	-	-	-
1	PZR			OWN	-	-	-	-	-	-	-
				PRE	-	-	-	-	-	-	-

Category, ItemNO, Class	Summary / CompID / System	Scope / Method / Procedure	Iso No. Comp. Desc. Code Case		Period 1 00	Period 1 02	Period 2 03	Period 2 05	Period 2 06	Period 3 08	Period 3 09
B-J	I026000	AUG/PT/PT-106	A-11	ISI	-	-	-	-	-	-	-
B9.40	27	AUG/RT/RT-104	PIPE-TO-REDUCER	AUG	-	c	-	b	-	b	-
1	PZR	AUG/UT/UT-202		OWN	-	-	-	-	-	-	-
		AUG/PT/PT-106		PRE	-	-	-	-	-	-	-
B-J	I038700	ISI/PT/PT-106	A-19	ISI	-	-	-	s	-	-	-
B9.40	FSW-19		TEE-TO-REDUCER	AUG	-	-	-	-	-	-	-
1	HPSI			OWN	-	-	-	-	-	-	-
				PRE	-	-	-	-	-	-	-
B-J	I038800		A-19	ISI	-	-	-	-	-	-	-
B9.40	FSW-18		PIPE-TO-TEE	AUG	-	-	-	-	-	-	-
1	HPSI			OWN	-	-	-	-	-	-	-
				PRE	-	-	-	-	-	-	-
B-J	I038900		A-19	ISI	-	-	-	-	-	-	-
B9.40	FSW-17		PIPE-TO-TEE	AUG	-	-	-	-	-	-	-
1	HPSI			OWN	-	-	-	-	-	-	-
				PRE	-	-	-	-	-	-	-
B-J	I039000		A-19	ISI	-	-	-	-	-	-	-
B9.40	FSW-16		ELBOW-TO-PIPE	AUG	-	-	-	-	-	-	-
1	HPSI			OWN	-	-	-	-	-	-	-
				PRE	-	-	-	-	-	-	-
B-J	I039100	ISI/PT/PT-106	A-19	ISI	c	-	-	-	-	-	-
B9.40	FSW-15		PIPE-TO-ELBOW	AUG	-	-	-	-	-	-	-
1	HPSI			OWN	-	-	-	-	-	-	-
				PRE	-	-	-	-	-	-	-
B-J	I039200		A-19	ISI	-	-	-	-	-	-	-
B9.40	FSW-14		ELBOW-TO-PIPE	AUG	-	-	-	-	-	-	-
1	HPSI			OWN	-	-	-	-	-	-	-
				PRE	-	-	-	-	-	-	-
B-J	I039300	PSI/PT/PT-106	A-19	ISI	-	-	-	-	-	-	-
B9.40	FSW-13		PIPE-TO-ELBOW	AUG	-	-	-	-	-	-	-
1	HPSI			OWN	-	-	-	-	-	-	-
				PRE	-	c	-	-	-	-	-
B-J	I039400	PSI/PT/PT-106	A-19	ISI	-	-	-	-	-	-	-
B9.40	FSW-12B		VALVE(878J)-TO-PIPE	AUG	-	-	-	-	-	-	-
1	HPSI			OWN	-	-	-	-	-	-	-
				PRE	-	c	-	-	-	-	-
B-J	I039500		A-20	ISI	-	-	-	-	-	-	-
B9.40	ASW-1B		VALVE(878H)-TO-PIPE	AUG	-	-	-	-	-	-	-
1	HPSI			OWN	-	-	-	-	-	-	-
				PRE	-	-	-	-	-	-	-

Category, ItemNO, Class	Summary / CompID / System	Scope / Method / Procedure	Iso No. Comp. Desc. Code Case		Period 1 00	Period 1 02	Period 2 03	Period 2 05	Period 2 06	Period 3 08	Period 3 09
B-J	I039600	ISI/PT/PT-106	A-20	ISI	c	-	-	-	-	-	-
B9.40	ASW-1		PIPE-TO-ELBOW	AUG	-	-	-	-	-	-	-
1	HPSI			OWN	-	-	-	-	-	-	-
				PRE	-	-	-	-	-	-	-
B-J	I039700		A-20	ISI	-	-	-	-	-	-	-
B9.40	ASW-2		ELBOW-TO-PIPE	AUG	-	-	-	-	-	-	-
1	HPSI			OWN	-	-	-	-	-	-	-
				PRE	-	-	-	-	-	-	-
B-J	I039800		A-20	ISI	-	-	-	-	-	-	-
B9.40	ASW-3		PIPE-TO-ELBOW	AUG	-	-	-	-	-	-	-
1	HPSI			OWN	-	-	-	-	-	-	-
				PRE	-	-	-	-	-	-	-
B-J	I039900		A-20	ISI	-	-	-	-	-	-	-
B9.40	ASW-4		ELBOW-TO-PIPE	AUG	-	-	-	-	-	-	-
1	HPSI			OWN	-	-	-	-	-	-	-
				PRE	-	-	-	-	-	-	-
B-J	I040100	ISI/PT/PT-106	A-20	ISI	-	-	c	-	-	-	-
B9.40	ASW-5		PIPE-TO-ELBOW	AUG	-	-	-	-	-	-	-
1	HPSI			OWN	-	-	-	-	-	-	-
				PRE	-	-	-	-	-	-	-
B-J	I040200		A-20	ISI	-	-	-	-	-	-	-
B9.40	ASW-6		ELBOW-TO-PIPE	AUG	-	-	-	-	-	-	-
1	HPSI			OWN	-	-	-	-	-	-	-
				PRE	-	-	-	-	-	-	-
B-J	I040300		A-20	ISI	-	-	-	-	-	-	-
B9.40	ASW-7		PIPE-TO-ELBOW	AUG	-	-	-	-	-	-	-
1	HPSI			OWN	-	-	-	-	-	-	-
				PRE	-	-	-	-	-	-	-
B-J	I040400		A-20	ISI	-	-	-	-	-	-	-
B9.40	ASW-8		ELBOW-TO-PIPE	AUG	-	-	-	-	-	-	-
1	HPSI			OWN	-	-	-	-	-	-	-
				PRE	-	-	-	-	-	-	-
B-J	I040500		A-20	ISI	-	-	-	-	-	-	-
B9.40	ASW-9		PIPE-TO-VALVE(877B)	AUG	-	-	-	-	-	-	-
1	HPSI			OWN	-	-	-	-	-	-	-
				PRE	-	-	-	-	-	-	-
B-J	I040600		A-20	ISI	-	-	-	-	-	-	-
B9.40	ASW-10		VALVE(877B)-TO-PIPE	AUG	-	-	-	-	-	-	-
1	RC			OWN	-	-	-	-	-	-	-
				PRE	-	-	-	-	-	-	-

Category, ItemNO, Class	Summary / CompID / System	Scope / Method / Procedure	Iso No. Comp. Desc. Code Case		Period 1 00	Period 1 02	Period 2 03	Period 2 05	Period 2 06	Period 3 08	Period 3 09
B-J	I040700		A-20	ISI	-	-	-	-	-	-	-
B9.40	ASW-11		PIPE-TO-ELBOW	AUG	-	-	-	-	-	-	-
1	RC			OWN	-	-	-	-	-	-	-
				PRE	-	-	-	-	-	-	-
B-J	I040800		A-20	ISI	-	-	-	-	-	-	-
B9.40	ASW-12		ELBOW-TO-PIPE	AUG	-	-	-	-	-	-	-
1	RC			OWN	-	-	-	-	-	-	-
				PRE	-	-	-	-	-	-	-
B-J	I040900	ISI/PT/PT-106	A-20	ISI	-	-	-	-	-	s	-
B9.40	ASW-13		2" PIPE-TO-BRANCH CONNECTION	AUG	-	-	-	-	-	-	-
1	RC			OWN	-	-	-	-	-	-	-
				PRE	-	-	-	-	-	-	-
B-J	I041000	PSI/PT/PT-106	A-16	ISI	-	-	-	-	-	-	-
B9.40	LSW-5B		VALVE(878G)-TO-PIPE	AUG	-	-	-	-	-	-	-
1	HPSI			OWN	-	-	-	-	-	-	-
				PRE	-	c	-	-	-	-	-
B-J	I041020	PSI/PT/PT-106	A-16	ISI	-	-	-	-	-	-	-
B9.40	LSW-5C		PIPE-TO-ELBOW	AUG	-	-	-	-	-	-	-
1	HPSI			OWN	-	-	-	-	-	-	-
				PRE	-	c	-	-	-	-	-
B-J	I041040		A-16	ISI	-	-	-	-	-	-	-
B9.40	LSW-5D		ELBOW-TO-PIPE	AUG	-	-	-	-	-	-	-
1	HPSI			OWN	-	-	-	-	-	-	-
				PRE	-	-	-	-	-	-	-
B-J	I041060		A-16	ISI	-	-	-	-	-	-	-
B9.40	LSW-5E		PIPE-TO-ELBOW	AUG	-	-	-	-	-	-	-
1	HPSI			OWN	-	-	-	-	-	-	-
				PRE	-	-	-	-	-	-	-
B-J	I041080		A-16	ISI	-	-	-	-	-	-	-
B9.40	LSW-5F		ELBOW-TO-PIPE	AUG	-	-	-	-	-	-	-
1	HPSI			OWN	-	-	-	-	-	-	-
				PRE	-	-	-	-	-	-	-
B-J	I041100	ISI/PT/PT-106	A-16	ISI	-	-	-	-	-	s	-
B9.40	LSW-6		2" PIPE-TO-BRANCH CONNECTION	AUG	-	-	-	-	-	-	-
1	HPSI			OWN	-	-	-	-	-	-	-
				PRE	-	-	-	-	-	-	-
B-J	I041200		A-21	ISI	-	-	-	-	-	-	-
B9.40	GSW-11B		VALVE(878F)-TO-PIPE	AUG	-	-	-	-	-	-	-
1	HPSI			OWN	-	-	-	-	-	-	-
				PRE	-	-	-	-	-	-	-

Category, ItemNO, Class	Summary / CompID / System	Scope / Method / Procedure	Iso No. Comp. Desc. Code Case		Period 1 00	Period 1 02	Period 2 03	Period 2 05	Period 2 06	Period 3 08	Period 3 09
B-J	I041600	ISI/PT/PT-106	A-21	ISI	c	-	-	-	-	-	-
B9.40	GSW-14		PIPE-TO-ELBOW	AUG	-	-	-	-	-	-	-
1	HPSI			OWN	-	-	-	-	-	-	-
				PRE	-	-	-	-	-	-	-
B-J	I041700	ISI/PT/PT-106	A-21	ISI	-	-	-	s	-	-	-
B9.40	GSW-15		ELBOW-TO-PIPE	AUG	-	-	-	-	-	-	-
1	HPSI			OWN	-	-	-	-	-	-	-
				PRE	-	-	-	-	-	-	-
B-J	I041800	ISI/PT/PT-106	A-21	ISI	-	-	-	-	-	s	-
B9.40	GSW-16		PIPE-TO-ELBOW	AUG	-	-	-	-	-	-	-
1	HPSI			OWN	-	-	-	-	-	-	-
				PRE	-	-	-	-	-	-	-
B-J	I041900		A-21	ISI	-	-	-	-	-	-	-
B9.40	GSW-17		ELBOW-TO-PIPE	AUG	-	-	-	-	-	-	-
1	HPSI			OWN	-	-	-	-	-	-	-
				PRE	-	-	-	-	-	-	-
B-J	I042000		A-21	ISI	-	-	-	-	-	-	-
B9.40	GSW-18		PIPE-TO-VALVE(877A)	AUG	-	-	-	-	-	-	-
1	HPSI			OWN	-	-	-	-	-	-	-
				PRE	-	-	-	-	-	-	-
B-J	I042100		A-21	ISI	-	-	-	-	-	-	-
B9.40	GSW-19		VALVE(877A)-TO-PIPE	AUG	-	-	-	-	-	-	-
1	RC			OWN	-	-	-	-	-	-	-
				PRE	-	-	-	-	-	-	-
B-J	I042200	ISI/PT/PT-106	A-21	ISI	-	-	-	s	-	-	-
B9.40	GSW-20		2" PIPE-TO-BRANCH CONNECTION	AUG	-	-	-	-	-	-	-
1	RC			OWN	-	-	-	-	-	-	-
				PRE	-	-	-	-	-	-	-
B-J	I042300	ISI/PT/PT-106	A-22	ISI	c	-	-	-	-	-	-
B9.40	1		NOZZLE-TO-PIPE	AUG	-	-	-	-	-	-	-
1	RC			OWN	-	-	-	-	-	-	-
				PRE	-	-	-	-	-	-	-
B-J	I042500		A-22	ISI	-	-	-	-	-	-	-
B9.40	2		PIPE-TO-TEE	AUG	-	-	-	-	-	-	-
1	RC			OWN	-	-	-	-	-	-	-
				PRE	-	-	-	-	-	-	-
B-J	I042600		A-22	ISI	-	-	-	-	-	-	-
B9.40	3		TEE-TO-PIPE	AUG	-	-	-	-	-	-	-
1	RC			OWN	-	-	-	-	-	-	-
				PRE	-	-	-	-	-	-	-

Category, ItemNO, Class	Summary / CompID / System	Scope / Method / Procedure	Iso No. Comp. Desc. Code Case		Period 1 00	Period 1 02	Period 2 03	Period 2 05	Period 2 06	Period 3 08	Period 3 09
B-J	I042700	ISI/PT/PT-106	A-23A	ISI	-	-	-	-	-	s	-
B9.40	1		NOZZLE-TO-PIPE	AUG	-	-	-	-	-	-	-
1	RC			OWN	-	-	-	-	-	-	-
				PRE	-	-	-	-	-	-	-
B-J	I042800		A-23A	ISI	-	-	-	-	-	-	-
B9.40	2		PIPE-TO-TEE	AUG	-	-	-	-	-	-	-
1	RC			OWN	-	-	-	-	-	-	-
				PRE	-	-	-	-	-	-	-
B-J	I042900		A-23A	ISI	-	-	-	-	-	-	-
B9.40	3		TEE-TO-PIPE	AUG	-	-	-	-	-	-	-
1	RC			OWN	-	-	-	-	-	-	-
				PRE	-	-	-	-	-	-	-
B-J	I043100		A-23A	ISI	-	-	-	-	-	-	-
B9.40	4		PIPE-TO-VALVE(543)	AUG	-	-	-	-	-	-	-
1	RC			OWN	-	-	-	-	-	-	-
				PRE	-	-	-	-	-	-	-
B-J	I043200		A-23A	ISI	-	-	-	-	-	-	-
B9.40	5		VALVE(543)-TO-PIPE	AUG	-	-	-	-	-	-	-
1	RC			OWN	-	-	-	-	-	-	-
				PRE	-	-	-	-	-	-	-
B-J	I043300	ISI/PT/PT-106	A-23A	ISI	c	-	-	-	-	-	-
B9.40	6		PIPE-TO-ELBOW	AUG	-	-	-	-	-	-	-
1	RC			OWN	-	-	-	-	-	-	-
				PRE	-	-	-	-	-	-	-
B-J	I043400		A-23A	ISI	-	-	-	-	-	-	-
B9.40	7		ELBOW-TO-PIPE	AUG	-	-	-	-	-	-	-
1	RC			OWN	-	-	-	-	-	-	-
				PRE	-	-	-	-	-	-	-
B-J	I043600		A-23A	ISI	-	-	-	-	-	-	-
B9.40	8		PIPE-TO-ELBOW	AUG	-	-	-	-	-	-	-
1	RC			OWN	-	-	-	-	-	-	-
				PRE	-	-	-	-	-	-	-
B-J	I043700		A-23A	ISI	-	-	-	-	-	-	-
B9.40	9		ELBOW-TO-PIPE	AUG	-	-	-	-	-	-	-
1	RC			OWN	-	-	-	-	-	-	-
				PRE	-	-	-	-	-	-	-
B-J	I043800		A-23A	ISI	-	-	-	-	-	-	-
B9.40	10		PIPE-TO-VALVE(427)	AUG	-	-	-	-	-	-	-
1	RC			OWN	-	-	-	-	-	-	-
				PRE	-	-	-	-	-	-	-

Category, ItemNO, Class	Summary / CompID / System	Scope / Method / Procedure	Iso No. Comp. Desc. Code Case		Period 1 00	Period 1 02	Period 2 03	Period 2 05	Period 2 06	Period 3 08	Period 3 09
B-J	I043900		A-23	ISI	-	-	-	-	-	-	-
B9.40	11		VALVE(427)-TO-PIPE	AUG	-	-	-	-	-	-	-
1	CVCS-LTDN			OWN	-	-	-	-	-	-	-
				PRE	-	-	-	-	-	-	-
B-J	I044000	ISI/PT/PT-106	A-23	ISI	-	c	-	-	-	-	-
B9.40	12		PIPE-TO-TEE	AUG	-	-	-	-	-	-	-
1	CVCS-LTDN			OWN	-	-	-	-	-	-	-
				PRE	-	-	-	-	-	-	-
B-J	I044100	ISI/PT/PT-106	A-23	ISI	-	-	-	-	-	s	-
B9.40	13		TEE-TO-PIPE	AUG	-	-	-	-	-	-	-
1	CVCS-LTDN			OWN	-	-	-	-	-	-	-
				PRE	-	-	-	-	-	-	-
B-J	I044200		A-23	ISI	-	-	-	-	-	-	-
B9.40	14		PIPE-TO-VALVE(2204)	AUG	-	-	-	-	-	-	-
1	CVCS-LTDN			OWN	-	-	-	-	-	-	-
				PRE	-	-	-	-	-	-	-
B-J	I044300		A-23	ISI	-	-	-	-	-	-	-
B9.40	15		VALVE(2204)-TO-PIPE	AUG	-	-	-	-	-	-	-
1	CVCS-LTDN			OWN	-	-	-	-	-	-	-
				PRE	-	-	-	-	-	-	-
B-J	I044400	ISI/PT/PT-106	A-23	ISI	-	c	-	-	-	-	-
B9.40	16		PIPE-TO-COUPLING	AUG	-	-	-	-	-	-	-
1	CVCS-LTDN			OWN	-	-	-	-	-	-	-
				PRE	-	-	-	-	-	-	-
B-J	I044420		A-23	ISI	-	-	-	-	-	-	-
B9.40	16A		COUPLING-TO-PIPE	AUG	-	-	-	-	-	-	-
1	CVCS-LTDN			OWN	-	-	-	-	-	-	-
				PRE	-	-	-	-	-	-	-
B-J	I044440		A-23	ISI	-	-	-	-	-	-	-
B9.40	16B		PIPE-TO-CAP	AUG	-	-	-	-	-	-	-
1	CVCS-LTDN			OWN	-	-	-	-	-	-	-
				PRE	-	-	-	-	-	-	-
B-J	I044500	ISI/PT/PT-106	A-23	ISI	-	-	c	-	-	-	-
B9.40	17		TEE-TO-PIPE	AUG	-	-	-	-	-	-	-
1	CVCS-LTDN			OWN	-	-	-	-	-	-	-
				PRE	-	-	-	-	-	-	-
B-J	I044600		A-23	ISI	-	-	-	-	-	-	-
B9.40	18		PIPE-TO-ELBOW	AUG	-	-	-	-	-	-	-
1	CVCS-LTDN			OWN	-	-	-	-	-	-	-
				PRE	-	-	-	-	-	-	-

Category, ItemNO, Class	Summary / CompID / System	Scope / Method / Procedure	Iso No. Comp. Desc. Code Case		Period 1 00	Period 1 02	Period 2 03	Period 2 05	Period 2 06	Period 3 08	Period 3 09
B-J	I044700		A-23	ISI	-	-	-	-	-	-	-
B9.40	19		ELBOW-TO-PIPE	AUG	-	-	-	-	-	-	-
1	CVCS-LTDN			OWN	-	-	-	-	-	-	-
				PRE	-	-	-	-	-	-	-
B-J	I044900	ISI/PT/PT-106	A-23	ISI	-	-	-	s	-	-	-
B9.40	20		PIPE-TO-ELBOW	AUG	-	-	-	-	-	-	-
1	CVCS-LTDN			OWN	-	-	-	-	-	-	-
				PRE	-	-	-	-	-	-	-
B-J	I045000		A-23	ISI	-	-	-	-	-	-	-
B9.40	21		ELBOW-TO-PIPE	AUG	-	-	-	-	-	-	-
1	CVCS-LTDN			OWN	-	-	-	-	-	-	-
				PRE	-	-	-	-	-	-	-
B-J	I045300		A-23	ISI	-	-	-	-	-	-	-
B9.40	22		PIPE-TO-ELBOW	AUG	-	-	-	-	-	-	-
1	CVCS-LTDN			OWN	-	-	-	-	-	-	-
				PRE	-	-	-	-	-	-	-
B-J	I045400		A-23	ISI	-	-	-	-	-	-	-
B9.40	23		ELBOW-TO-PIPE	AUG	-	-	-	-	-	-	-
1	CVCS-LTDN			OWN	-	-	-	-	-	-	-
				PRE	-	-	-	-	-	-	-
B-J	I045500		A-23	ISI	-	-	-	-	-	-	-
B9.40	24		PIPE-TO-ELBOW	AUG	-	-	-	-	-	-	-
1	CVCS-LTDN			OWN	-	-	-	-	-	-	-
				PRE	-	-	-	-	-	-	-
B-J	I045600	ISI/PT/PT-106	A-23	ISI	-	-	-	-	-	s	-
B9.40	25		ELBOW-TO-PIPE	AUG	-	-	-	-	-	-	-
1	CVCS-LTDN			OWN	-	-	-	-	-	-	-
				PRE	-	-	-	-	-	-	-
B-J	I045800		A-23	ISI	-	-	-	-	-	-	-
B9.40	26		PIPE-TO-ELBOW	AUG	-	-	-	-	-	-	-
1	CVCS-LTDN			OWN	-	-	-	-	-	-	-
				PRE	-	-	-	-	-	-	-
B-J	I045900	ISI/PT/PT-106	A-23	ISI	-	-	c	-	-	-	-
B9.40	27		ELBOW-TO-PIPE	AUG	-	-	-	-	-	-	-
1	CVCS-LTDN			OWN	-	-	-	-	-	-	-
				PRE	-	-	-	-	-	-	-
B-J	I046600	ISI/PT/PT-106	A-23	ISI	-	-	-	-	-	s	-
B9.40	30		PIPE-TO-ELBOW	AUG	-	-	-	-	-	-	-
1	CVCS-LTDN			OWN	-	-	-	-	-	-	-
				PRE	-	-	-	-	-	-	-

Category, ItemNO, Class	Summary / CompID / System	Scope / Method / Procedure	Iso No. Comp. Desc. Code Case		Period 1 00	Period 1 02	Period 2 03	Period 2 05	Period 2 06	Period 3 08	Period 3 09
B-J	I046700		A-23	ISI	-	-	-	-	-	-	-
B9.40	31		ELBOW-TO-PIPE	AUG	-	-	-	-	-	-	-
1	CVCS-LTDN			OWN	-	-	-	-	-	-	-
				PRE	-	-	-	-	-	-	-
B-J	I046900		A-23	ISI	-	-	-	-	-	-	-
B9.40	32		PIPE-TO-ELBOW	AUG	-	-	-	-	-	-	-
1	CVCS-LTDN			OWN	-	-	-	-	-	-	-
				PRE	-	-	-	-	-	-	-
B-J	I047000		A-23	ISI	-	-	-	-	-	-	-
B9.40	33		ELBOW-TO-PIPE	AUG	-	-	-	-	-	-	-
1	CVCS-LTDN			OWN	-	-	-	-	-	-	-
				PRE	-	-	-	-	-	-	-
B-J	I047300		A-23	ISI	-	-	-	-	-	-	-
B9.40	34		PIPE-TO-ELBOW	AUG	-	-	-	-	-	-	-
1	CVCS-LTDN			OWN	-	-	-	-	-	-	-
				PRE	-	-	-	-	-	-	-
B-J	I047400		A-23	ISI	-	-	-	-	-	-	-
B9.40	35		ELBOW-TO-PIPE	AUG	-	-	-	-	-	-	-
1	CVCS-LTDN			OWN	-	-	-	-	-	-	-
				PRE	-	-	-	-	-	-	-
B-J	I047500		A-23	ISI	-	-	-	-	-	-	-
B9.40	36		PIPE-TO-ELBOW	AUG	-	-	-	-	-	-	-
1	CVCS-LTDN			OWN	-	-	-	-	-	-	-
				PRE	-	-	-	-	-	-	-
B-J	I047600	ISI/PT/PT-106	A-23	ISI	-	-	-	-	-	s	-
B9.40	37		ELBOW-TO-PIPE	AUG	-	-	-	-	-	-	-
1	CVCS-LTDN			OWN	-	-	-	-	-	-	-
				PRE	-	-	-	-	-	-	-
B-J	I047700		A-23	ISI	-	-	-	-	-	-	-
B9.40	38		PIPE-TO-TEE	AUG	-	-	-	-	-	-	-
1	CVCS-LTDN			OWN	-	-	-	-	-	-	-
				PRE	-	-	-	-	-	-	-
B-J	I047725		A-23	ISI	-	-	-	-	-	-	-
B9.40	38A		TEE-TO-REDUCING INSERT	AUG	-	-	-	-	-	-	-
1	CVCS-LTDN			OWN	-	-	-	-	-	-	-
				PRE	-	-	-	-	-	-	-
B-J	I047800		A-23	ISI	-	-	-	-	-	-	-
B9.40	39		TEE-TO-PIPE	AUG	-	-	-	-	-	-	-
1	CVCS-LTDN			OWN	-	-	-	-	-	-	-
				PRE	-	-	-	-	-	-	-

Category, ItemNO, Class	Summary / CompID / System	Scope / Method / Procedure	Iso No. Comp. Desc. Code Case		Period 1 00	Period 1 02	Period 2 03	Period 2 05	Period 2 06	Period 3 08	Period 3 09
B-J	I047900		A-23	ISI	-	-	-	-	-	-	-
B9.40	40		PIPE-TO-ELBOW	AUG	-	-	-	-	-	-	-
1	CVCS-LTDN			OWN	-	-	-	-	-	-	-
				PRE	-	-	-	-	-	-	-
B-J	I048000		A-23	ISI	-	-	-	-	-	-	-
B9.40	41		ELBOW-TO-PIPE	AUG	-	-	-	-	-	-	-
1	CVCS-LTDN			OWN	-	-	-	-	-	-	-
				PRE	-	-	-	-	-	-	-
B-J	I048100	ISI/PT/PT-106	A-23	ISI	-	-	-	-	-	s	-
B9.40	42		PIPE-TO-NOZZLE	AUG	-	-	-	-	-	-	-
1	CVCS-LTDN			OWN	-	-	-	-	-	-	-
				PRE	-	-	-	-	-	-	-
B-J	I048200	ISI/PT/PT-106	A-24	ISI	-	-	c	-	-	-	-
B9.40	1		NOZZLE-TO-PIPE	AUG	-	-	-	-	-	-	-
1	CVCS-LTDN			OWN	-	-	-	-	-	-	-
				PRE	-	-	-	-	-	-	-
B-J	I048202	ISI/PT/PT-106	A-24	ISI	-	-	-	s	-	-	-
B9.40	2		PIPE-TO-TEE	AUG	-	-	-	-	-	-	-
1	CVCS-LTDN			OWN	-	-	-	-	-	-	-
				PRE	-	-	-	-	-	-	-
B-J	I048204	ISI/PT/PT-106	A-24	ISI	-	-	-	-	-	s	-
B9.40	3		TEE-TO-PIPE	AUG	-	-	-	-	-	-	-
1	CVCS-LTDN			OWN	-	-	-	-	-	-	-
				PRE	-	-	-	-	-	-	-
B-J	I048206		A-24	ISI	-	-	-	-	-	-	-
B9.40	3A		TEE-TO-REDUCING INSERT	AUG	-	-	-	-	-	-	-
1	CVCS-LTDN			OWN	-	-	-	-	-	-	-
				PRE	-	-	-	-	-	-	-
B-J	I048212		A-24	ISI	-	-	-	-	-	-	-
B9.40	4		PIPE-TO-ELBOW	AUG	-	-	-	-	-	-	-
1	CVCS-LTDN			OWN	-	-	-	-	-	-	-
				PRE	-	-	-	-	-	-	-
B-J	I048214		A-24	ISI	-	-	-	-	-	-	-
B9.40	5		ELBOW-TO-PIPE	AUG	-	-	-	-	-	-	-
1	CVCS-LTDN			OWN	-	-	-	-	-	-	-
				PRE	-	-	-	-	-	-	-
B-J	I048216	ISI/PT/PT-106	A-24	ISI	-	c	-	-	-	-	-
B9.40	6		PIPE-TO-TEE	AUG	-	-	-	-	-	-	-
1	CVCS-LTDN			OWN	-	-	-	-	-	-	-
				PRE	-	-	-	-	-	-	-

Category, ItemNO, Class	Summary / CompID / System	Scope / Method / Procedure	Iso No. Comp. Desc. Code Case		Period 1 00	Period 1 02	Period 2 03	Period 2 05	Period 2 06	Period 3 08	Period 3 09
B-J	I048218		A-24	ISI	-	-	-	-	-	-	-
B9.40	7		TEE-TO-PIPE	AUG	-	-	-	-	-	-	-
1	CVCS-LTDN			OWN	-	-	-	-	-	-	-
				PRE	-	-	-	-	-	-	-
B-J	I048220		A-24	ISI	-	-	-	-	-	-	-
B9.40	8		PIPE-TO-ORIFICE	AUG	-	-	-	-	-	-	-
1	CVCS-LTDN			OWN	-	-	-	-	-	-	-
				PRE	-	-	-	-	-	-	-
B-J	I048222		A-24	ISI	-	-	-	-	-	-	-
B9.40	9		ORIFICE-TO-PIPE	AUG	-	-	-	-	-	-	-
1	CVCS-LTDN			OWN	-	-	-	-	-	-	-
				PRE	-	-	-	-	-	-	-
B-J	I048224		A-24	ISI	-	-	-	-	-	-	-
B9.40	10		PIPE-TO-ELBOW	AUG	-	-	-	-	-	-	-
1	CVCS-LTDN			OWN	-	-	-	-	-	-	-
				PRE	-	-	-	-	-	-	-
B-J	I048226		A-24	ISI	-	-	-	-	-	-	-
B9.40	11		ELBOW-TO-PIPE	AUG	-	-	-	-	-	-	-
1	CVCS-LTDN			OWN	-	-	-	-	-	-	-
				PRE	-	-	-	-	-	-	-
B-J	I048230		A-24	ISI	-	-	-	-	-	-	-
B9.40	12		PIPE-TO-VALVE(200A)	AUG	-	-	-	-	-	-	-
1	CVCS-LTDN			OWN	-	-	-	-	-	-	-
				PRE	-	-	-	-	-	-	-
B-J	I048234		A-24	ISI	-	-	-	-	-	-	-
B9.40	14		TEE-TO-PIPE	AUG	-	-	-	-	-	-	-
1	CVCS-LTDN			OWN	-	-	-	-	-	-	-
				PRE	-	-	-	-	-	-	-
B-J	I048238		A-24	ISI	-	-	-	-	-	-	-
B9.40	15		PIPE-TO-TEE	AUG	-	-	-	-	-	-	-
1	CVCS-LTDN			OWN	-	-	-	-	-	-	-
				PRE	-	-	-	-	-	-	-
B-J	I048240		A-24	ISI	-	-	-	-	-	-	-
B9.40	16		TEE-TO-PIPE	AUG	-	-	-	-	-	-	-
1	CVCS-LTDN			OWN	-	-	-	-	-	-	-
				PRE	-	-	-	-	-	-	-
B-J	I048242		A-24	ISI	-	-	-	-	-	-	-
B9.40	17		PIPE-TO-ORIFICE	AUG	-	-	-	-	-	-	-
1	CVCS-LTDN			OWN	-	-	-	-	-	-	-
				PRE	-	-	-	-	-	-	-

Category, ItemNO, Class	Summary / CompID / System	Scope / Method / Procedure	Iso No. Comp. Desc. Code Case		Period 1 00	Period 1 02	Period 2 03	Period 2 05	Period 2 06	Period 3 08	Period 3 09
B-J	I048244	ISI/PT/PT-106	A-24	ISI	-	c	-	-	-	-	-
B9.40	18		ORIFICE-TO-PIPE	AUG	-	-	-	-	-	-	-
1	CVCS-LTDN			OWN	-	-	-	-	-	-	-
				PRE	-	-	-	-	-	-	-
B-J	I048246		A-24	ISI	-	-	-	-	-	-	-
B9.40	19		PIPE-TO-ELBOW	AUG	-	-	-	-	-	-	-
1	CVCS-LTDN			OWN	-	-	-	-	-	-	-
				PRE	-	-	-	-	-	-	-
B-J	I048248		A-24	ISI	-	-	-	-	-	-	-
B9.40	20		ELBOW-TO-PIPE	AUG	-	-	-	-	-	-	-
1	CVCS-LTDN			OWN	-	-	-	-	-	-	-
				PRE	-	-	-	-	-	-	-
B-J	I048250		A-24	ISI	-	-	-	-	-	-	-
B9.40	21		PIPE-TO-VALVE(200B)	AUG	-	-	-	-	-	-	-
1	CVCS-LTDN			OWN	-	-	-	-	-	-	-
				PRE	-	-	-	-	-	-	-
B-J	I048254		A-24	ISI	-	-	-	-	-	-	-
B9.40	23		TEE-TO-PIPE	AUG	-	-	-	-	-	-	-
1	CVCS-LTDN			OWN	-	-	-	-	-	-	-
				PRE	-	-	-	-	-	-	-
B-J	I048262		A-24	ISI	-	-	-	-	-	-	-
B9.40	24		PIPE-TO-ELBOW	AUG	-	-	-	-	-	-	-
1	CVCS-LTDN			OWN	-	-	-	-	-	-	-
				PRE	-	-	-	-	-	-	-
B-J	I048264		A-24	ISI	-	-	-	-	-	-	-
B9.40	25		ELBOW-TO-PIPE	AUG	-	-	-	-	-	-	-
1	CVCS-LTDN			OWN	-	-	-	-	-	-	-
				PRE	-	-	-	-	-	-	-
B-J	I048266		A-24	ISI	-	-	-	-	-	-	-
B9.40	26		PIPE-TO-ORIFICE	AUG	-	-	-	-	-	-	-
1	CVCS-LTDN			OWN	-	-	-	-	-	-	-
				PRE	-	-	-	-	-	-	-
B-J	I048268		A-24	ISI	-	-	-	-	-	-	-
B9.40	27		ORIFICE-TO-PIPE	AUG	-	-	-	-	-	-	-
1	CVCS-LTDN			OWN	-	-	-	-	-	-	-
				PRE	-	-	-	-	-	-	-
B-J	I048270	ISI/PT/PT-106	A-24	ISI	-	c	-	-	-	-	-
B9.40	28		PIPE-TO-ELBOW	AUG	-	-	-	-	-	-	-
1	CVCS-LTDN			OWN	-	-	-	-	-	-	-
				PRE	-	-	-	-	-	-	-

Category, ItemNO, Class	Summary / CompID / System	Scope / Method / Procedure	Iso No. Comp. Desc. Code Case		Period 1 00	Period 1 02	Period 2 03	Period 2 05	Period 2 06	Period 3 08	Period 3 09
B-J	I048272		A-24	ISI	-	-	-	-	-	-	-
B9.40	29		ELBOW-TO-PIPE	AUG	-	-	-	-	-	-	-
1	CVCS-LTDN			OWN	-	-	-	-	-	-	-
				PRE	-	-	-	-	-	-	-
B-J	I048274	ISI/PT/PT-106	A-24	ISI	-	-	-	-	-	s	-
B9.40	30		PIPE-TO-VALVE(202)	AUG	-	-	-	-	-	-	-
1	CVCS-LTDN			OWN	-	-	-	-	-	-	-
				PRE	-	-	-	-	-	-	-
B-J	I049000	PSI/PT/PT-106	A-32A	ISI	-	-	-	-	-	-	-
B9.40	68		VALVE(304B)-TO-PIPE	AUG	-	-	-	-	-	-	-
1	CVCS-CHRG			OWN	-	-	-	-	-	-	-
				PRE	-	c	-	-	-	-	-
B-J	I049005		A-32A	ISI	-	-	-	-	-	-	-
B9.40	67		PIPE-TO-COUPLING	AUG	-	-	-	-	-	-	-
1	CVCS-CHRG			OWN	-	-	-	-	-	-	-
				PRE	-	-	-	-	-	-	-
B-J	I049010		A-32A	ISI	-	-	-	-	-	-	-
B9.40	66		COUPLING-TO-PIPE	AUG	-	-	-	-	-	-	-
1	CVCS-CHRG			OWN	-	-	-	-	-	-	-
				PRE	-	-	-	-	-	-	-
B-J	I049015		A-32A	ISI	-	-	-	-	-	-	-
B9.40	65		PIPE-TO-TEE	AUG	-	-	-	-	-	-	-
1	CVCS-CHRG			OWN	-	-	-	-	-	-	-
				PRE	-	-	-	-	-	-	-
B-J	I049020		A-32A	ISI	-	-	-	-	-	-	-
B9.40	64		TEE-TO-REDUCER	AUG	-	-	-	-	-	-	-
1	CVCS-CHRG			OWN	-	-	-	-	-	-	-
				PRE	-	-	-	-	-	-	-
B-J	I049025		A-32A	ISI	-	-	-	-	-	-	-
B9.40	63		TEE-TO-PIPE	AUG	-	-	-	-	-	-	-
1	CVCS-CHRG			OWN	-	-	-	-	-	-	-
				PRE	-	-	-	-	-	-	-
B-J	I049030		A-32A	ISI	-	-	-	-	-	-	-
B9.40	62		PIPE-TO-VALVE(9301)	AUG	-	-	-	-	-	-	-
1	CVCS-CHRG			OWN	-	-	-	-	-	-	-
				PRE	-	-	-	-	-	-	-
B-J	I049035		A-32A	ISI	-	-	-	-	-	-	-
B9.40	61		VALVE(9301)-TO-PIPE	AUG	-	-	-	-	-	-	-
1	CVCS-CHRG			OWN	-	-	-	-	-	-	-
				PRE	-	-	-	-	-	-	-

Category, ItemNO, Class	Summary / CompID / System	Scope / Method / Procedure	Iso No. Comp. Desc. Code Case		Period 1 00	Period 1 02	Period 2 03	Period 2 05	Period 2 06	Period 3 08	Period 3 09
B-J	I049045		A-32A	ISI	-	-	-	-	-	-	-
B9.40	60		PIPE-TO-ELBOW	AUG	-	-	-	-	-	-	-
1	CVCS-CHRG			OWN	-	-	-	-	-	-	-
				PRE	-	-	-	-	-	-	-
B-J	I049050	ISI/PT/PT-106	A-32A	ISI	-	-	-	-	-	s	-
B9.40	59		ELBOW-TO-PIPE	AUG	-	-	-	-	-	-	-
1	CVCS-CHRG			OWN	-	-	-	-	-	-	-
				PRE	-	-	-	-	-	-	-
B-J	I049055		A-32A	ISI	-	-	-	-	-	-	-
B9.40	58		PIPE-TO-ELBOW	AUG	-	-	-	-	-	-	-
1	CVCS-CHRG			OWN	-	-	-	-	-	-	-
				PRE	-	-	-	-	-	-	-
B-J	I049060		A-32A	ISI	-	-	-	-	-	-	-
B9.40	57		ELBOW-TO-PIPE	AUG	-	-	-	-	-	-	-
1	CVCS-CHRG			OWN	-	-	-	-	-	-	-
				PRE	-	-	-	-	-	-	-
B-J	I049065		A-32A	ISI	-	-	-	-	-	-	-
B9.40	56		PIPE-TO-ELBOW	AUG	-	-	-	-	-	-	-
1	CVCS-CHRG			OWN	-	-	-	-	-	-	-
				PRE	-	-	-	-	-	-	-
B-J	I049070		A-32A	ISI	-	-	-	-	-	-	-
B9.40	55		ELBOW-TO-PIPE	AUG	-	-	-	-	-	-	-
1	CVCS-CHRG			OWN	-	-	-	-	-	-	-
				PRE	-	-	-	-	-	-	-
B-J	I049075		A-32A	ISI	-	-	-	-	-	-	-
B9.40	54		PIPE-TO-ELBOW	AUG	-	-	-	-	-	-	-
1	CVCS-CHRG			OWN	-	-	-	-	-	-	-
				PRE	-	-	-	-	-	-	-
B-J	I049080		A-32A	ISI	-	-	-	-	-	-	-
B9.40	53		ELBOW-TO-PIPE	AUG	-	-	-	-	-	-	-
1	CVCS-CHRG			OWN	-	-	-	-	-	-	-
				PRE	-	-	-	-	-	-	-
B-J	I049090	ISI/PT/PT-106	A-32A	ISI	-	-	-	-	-	s	-
B9.40	52		PIPE-TO-COUPLING	AUG	-	-	-	-	-	-	-
1	CVCS-CHRG			OWN	-	-	-	-	-	-	-
				PRE	-	-	-	-	-	-	-
B-J	I049095		A-32A	ISI	-	-	-	-	-	-	-
B9.40	51		COUPLING-TO-PIPE	AUG	-	-	-	-	-	-	-
1	CVCS-CHRG			OWN	-	-	-	-	-	-	-
				PRE	-	-	-	-	-	-	-

Category, ItemNO, Class	Summary / CompID / System	Scope / Method / Procedure	Iso No. Comp. Desc. Code Case		Period 1 00	Period 1 02	Period 2 03	Period 2 05	Period 2 06	Period 3 08	Period 3 09
B-J	I049105		A-32A	ISI	-	-	-	-	-	-	-
B9.40	50		PIPE-TO-ELBOW	AUG	-	-	-	-	-	-	-
1	CVCS-CHRG			OWN	-	-	-	-	-	-	-
				PRE	-	-	-	-	-	-	-
B-J	I049110		A-32A	ISI	-	-	-	-	-	-	-
B9.40	49		ELBOW-TO-PIPE	AUG	-	-	-	-	-	-	-
1	CVCS-CHRG			OWN	-	-	-	-	-	-	-
				PRE	-	-	-	-	-	-	-
B-J	I049115		A-32A	ISI	-	-	-	-	-	-	-
B9.40	48		PIPE-TO-ELBOW	AUG	-	-	-	-	-	-	-
1	CVCS-CHRG			OWN	-	-	-	-	-	-	-
				PRE	-	-	-	-	-	-	-
B-J	I049120		A-32A	ISI	-	-	-	-	-	-	-
B9.40	47		ELBOW-TO-PIPE	AUG	-	-	-	-	-	-	-
1	CVCS-CHRG			OWN	-	-	-	-	-	-	-
				PRE	-	-	-	-	-	-	-
B-J	I049130		A-32A	ISI	-	-	-	-	-	-	-
B9.40	46		PIPE-TO-ELBOW	AUG	-	-	-	-	-	-	-
1	CVCS-CHRG			OWN	-	-	-	-	-	-	-
				PRE	-	-	-	-	-	-	-
B-J	I049135		A-32A	ISI	-	-	-	-	-	-	-
B9.40	45		ELBOW-TO-PIPE	AUG	-	-	-	-	-	-	-
1	CVCS-CHRG			OWN	-	-	-	-	-	-	-
				PRE	-	-	-	-	-	-	-
B-J	I049140		A-32A	ISI	-	-	-	-	-	-	-
B9.40	44		PIPE-TO-ELBOW	AUG	-	-	-	-	-	-	-
1	CVCS-CHRG			OWN	-	-	-	-	-	-	-
				PRE	-	-	-	-	-	-	-
B-J	I049145		A-32A	ISI	-	-	-	-	-	-	-
B9.40	43		ELBOW-TO-PIPE	AUG	-	-	-	-	-	-	-
1	CVCS-CHRG			OWN	-	-	-	-	-	-	-
				PRE	-	-	-	-	-	-	-
B-J	I049165		A-32A	ISI	-	-	-	-	-	-	-
B9.40	42		PIPE-TO-COUPLING	AUG	-	-	-	-	-	-	-
1	CVCS-CHRG			OWN	-	-	-	-	-	-	-
				PRE	-	-	-	-	-	-	-
B-J	I049170		A-32A	ISI	-	-	-	-	-	-	-
B9.40	41		COUPLING-TO-PIPE	AUG	-	-	-	-	-	-	-
1	CVCS-CHRG			OWN	-	-	-	-	-	-	-
				PRE	-	-	-	-	-	-	-

Category, ItemNO, Class	Summary / CompID / System	Scope / Method / Procedure	Iso No. Comp. Desc. Code Case		Period 1 00	Period 1 02	Period 2 03	Period 2 05	Period 2 06	Period 3 08	Period 3 09
B-J	I049180	ISI/PT/PT-106	A-32A	ISI	-	-	-	-	-	s	-
B9.40	40		PIPE-TO-TEE	AUG	-	-	-	-	-	-	-
1	CVCS-CHRG			OWN	-	-	-	-	-	-	-
				PRE	-	-	-	-	-	-	-
B-J	I049185		A-32A	ISI	-	-	-	-	-	-	-
B9.40	39		TEE-TO-REDUCER	AUG	-	-	-	-	-	-	-
1	CVCS-CHRG			OWN	-	-	-	-	-	-	-
				PRE	-	-	-	-	-	-	-
B-J	I049190		A-32A	ISI	-	-	-	-	-	-	-
B9.40	38		TEE-TO-PIPE	AUG	-	-	-	-	-	-	-
1	CVCS-CHRG			OWN	-	-	-	-	-	-	-
				PRE	-	-	-	-	-	-	-
B-J	I049195		A-32	ISI	-	-	-	-	-	-	-
B9.40	37		PIPE-TO-ELBOW	AUG	-	-	-	-	-	-	-
1	CVCS-CHRG			OWN	-	-	-	-	-	-	-
				PRE	-	-	-	-	-	-	-
B-J	I049200		A-32	ISI	-	-	-	-	-	-	-
B9.40	36		ELBOW-TO-PIPE	AUG	-	-	-	-	-	-	-
1	CVCS-CHRG			OWN	-	-	-	-	-	-	-
				PRE	-	-	-	-	-	-	-
B-J	I049210		A-32	ISI	-	-	-	-	-	-	-
B9.40	35		PIPE-TO-ELBOW	AUG	-	-	-	-	-	-	-
1	CVCS-CHRG			OWN	-	-	-	-	-	-	-
				PRE	-	-	-	-	-	-	-
B-J	I049215		A-32	ISI	-	-	-	-	-	-	-
B9.40	34		ELBOW-TO-PIPE	AUG	-	-	-	-	-	-	-
1	CVCS-CHRG			OWN	-	-	-	-	-	-	-
				PRE	-	-	-	-	-	-	-
B-J	I049225		A-32	ISI	-	-	-	-	-	-	-
B9.40	33		PIPE-TO-ELBOW	AUG	-	-	-	-	-	-	-
1	CVCS-CHRG			OWN	-	-	-	-	-	-	-
				PRE	-	-	-	-	-	-	-
B-J	I049230		A-32	ISI	-	-	-	-	-	-	-
B9.40	32		ELBOW-TO-PIPE	AUG	-	-	-	-	-	-	-
1	CVCS-CHRG			OWN	-	-	-	-	-	-	-
				PRE	-	-	-	-	-	-	-
B-J	I049235	ISI/PT/PT-106	A-32	ISI	-	-	-	-	-	s	-
B9.40	31		PIPE-TO-ELBOW	AUG	-	-	-	-	-	-	-
1	CVCS-CHRG			OWN	-	-	-	-	-	-	-
				PRE	-	-	-	-	-	-	-

Category, ItemNO, Class	Summary / CompID / System	Scope / Method / Procedure	Iso No. Comp. Desc. Code Case		Period 1 00	Period 1 02	Period 2 03	Period 2 05	Period 2 06	Period 3 08	Period 3 09
B-J	I049240		A-32	ISI	-	-	-	-	-	-	-
B9.40	30		ELBOW-TO-PIPE	AUG	-	-	-	-	-	-	-
1	CVCS-CHRG			OWN	-	-	-	-	-	-	-
				PRE	-	-	-	-	-	-	-
B-J	I049245		A-32	ISI	-	-	-	-	-	-	-
B9.40	29		PIPE-TO-ELBOW	AUG	-	-	-	-	-	-	-
1	CVCS-CHRG			OWN	-	-	-	-	-	-	-
				PRE	-	-	-	-	-	-	-
B-J	I049250		A-32	ISI	-	-	-	-	-	-	-
B9.40	28		ELBOW-TO-PIPE	AUG	-	-	-	-	-	-	-
1	CVCS-CHRG			OWN	-	-	-	-	-	-	-
				PRE	-	-	-	-	-	-	-
B-J	I049255	ISI/PT/PT-106	A-32	ISI	-	-	-	-	-	s	-
B9.40	27		PIPE-TO-ELBOW	AUG	-	-	-	-	-	-	-
1	CVCS-CHRG			OWN	-	-	-	-	-	-	-
				PRE	-	-	-	-	-	-	-
B-J	I049260		A-32	ISI	-	-	-	-	-	-	-
B9.40	26		ELBOW-TO-PIPE	AUG	-	-	-	-	-	-	-
1	CVCS-CHRG			OWN	-	-	-	-	-	-	-
				PRE	-	-	-	-	-	-	-
B-J	I049285		A-32	ISI	-	-	-	-	-	-	-
B9.40	23		PIPE-TO-ELBOW	AUG	-	-	-	-	-	-	-
1	CVCS-CHRG			OWN	-	-	-	-	-	-	-
				PRE	-	-	-	-	-	-	-
B-J	I049290		A-32	ISI	-	-	-	-	-	-	-
B9.40	22		ELBOW-TO-PIPE	AUG	-	-	-	-	-	-	-
1	CVCS-CHRG			OWN	-	-	-	-	-	-	-
				PRE	-	-	-	-	-	-	-
B-J	I049295		A-32	ISI	-	-	-	-	-	-	-
B9.40	21		PIPE-TO-ELBOW	AUG	-	-	-	-	-	-	-
1	CVCS-CHRG			OWN	-	-	-	-	-	-	-
				PRE	-	-	-	-	-	-	-
B-J	I049300		A-32	ISI	-	-	-	-	-	-	-
B9.40	20		ELBOW-TO-PIPE	AUG	-	-	-	-	-	-	-
1	CVCS-CHRG			OWN	-	-	-	-	-	-	-
				PRE	-	-	-	-	-	-	-
B-J	I049305	ISI/PT/PT-106	A-32	ISI	-	-	-	-	-	s	-
B9.40	19		PIPE-TO-ELBOW	AUG	-	-	-	-	-	-	-
1	CVCS-CHRG			OWN	-	-	-	-	-	-	-
				PRE	-	-	-	-	-	-	-

Category, ItemNO, Class	Summary / CompID / System	Scope / Method / Procedure	Iso No. Comp. Desc. Code Case		Period 1 00	Period 1 02	Period 2 03	Period 2 05	Period 2 06	Period 3 08	Period 3 09
B-J	I049310		A-32	ISI	-	-	-	-	-	-	-
B9.40	18		ELBOW-TO-PIPE	AUG	-	-	-	-	-	-	-
1	CVCS-CHRG			OWN	-	-	-	-	-	-	-
				PRE	-	-	-	-	-	-	-
B-J	I049315		A-32	ISI	-	-	-	-	-	-	-
B9.40	17		PIPE-TO-ELBOW	AUG	-	-	-	-	-	-	-
1	CVCS-CHRG			OWN	-	-	-	-	-	-	-
				PRE	-	-	-	-	-	-	-
B-J	I049320	ISI/PT/PT-106	A-32	ISI	-	-	-	-	-	s	-
B9.40	16		ELBOW-TO-PIPE	AUG	-	-	-	-	-	-	-
1	CVCS-CHRG			OWN	-	-	-	-	-	-	-
				PRE	-	-	-	-	-	-	-
B-J	I049330		A-32	ISI	-	-	-	-	-	-	-
B9.40	15		PIPE-TO-VALVE(302C)	AUG	-	-	-	-	-	-	-
1	CVCS-CHRG			OWN	-	-	-	-	-	-	-
				PRE	-	-	-	-	-	-	-
B-J	I049335		A-32	ISI	-	-	-	-	-	-	-
B9.40	14		VALVE(302C)-TO-PIPE	AUG	-	-	-	-	-	-	-
1	CVCS-CHRG			OWN	-	-	-	-	-	-	-
				PRE	-	-	-	-	-	-	-
B-J	I049340		A-32	ISI	-	-	-	-	-	-	-
B9.40	13		PIPE-TO-TEE	AUG	-	-	-	-	-	-	-
1	CVCS-CHRG			OWN	-	-	-	-	-	-	-
				PRE	-	-	-	-	-	-	-
B-J	I049345		A-32	ISI	-	-	-	-	-	-	-
B9.40	12		TEE-TO-REDUCER	AUG	-	-	-	-	-	-	-
1	CVCS-CHRG			OWN	-	-	-	-	-	-	-
				PRE	-	-	-	-	-	-	-
B-J	I049350		A-32	ISI	-	-	-	-	-	-	-
B9.40	11		TEE-TO-PIPE	AUG	-	-	-	-	-	-	-
1	CVCS-CHRG			OWN	-	-	-	-	-	-	-
				PRE	-	-	-	-	-	-	-
B-J	I049355		A-32	ISI	-	-	-	-	-	-	-
B9.40	10		PIPE-TO-FLANGE	AUG	-	-	-	-	-	-	-
1	CVCS-CHRG			OWN	-	-	-	-	-	-	-
				PRE	-	-	-	-	-	-	-
B-J	I049360		A-32	ISI	-	-	-	-	-	-	-
B9.40	9		FLANGE-TO-PIPE	AUG	-	-	-	-	-	-	-
1	CVCS-CHRG			OWN	-	-	-	-	-	-	-
				PRE	-	-	-	-	-	-	-

Category, ItemNO, Class	Summary / CompID / System	Scope / Method / Procedure	Iso No. Comp. Desc. Code Case		Period 1 00	Period 1 02	Period 2 03	Period 2 05	Period 2 06	Period 3 08	Period 3 09
B-J	I049375		A-32	ISI	-	-	-	-	-	-	-
B9.40	8		PIPE-TO-VALVE(304D)	AUG	-	-	-	-	-	-	-
1	CVCS-CHRG			OWN	-	-	-	-	-	-	-
				PRE	-	-	-	-	-	-	-
B-J	I049380	ISI/PT/PT-106	A-32	ISI	-	-	-	-	-	s	-
B9.40	7		VALVE(304D)-TO-PIPE	AUG	-	-	-	-	-	-	-
1	CVCS-CHRG			OWN	-	-	-	-	-	-	-
				PRE	-	-	-	-	-	-	-
B-J	I049385		A-32	ISI	-	-	-	-	-	-	-
B9.40	6		PIPE-TO-ELBOW	AUG	-	-	-	-	-	-	-
1	CVCS-CHRG			OWN	-	-	-	-	-	-	-
				PRE	-	-	-	-	-	-	-
B-J	I049390		A-32	ISI	-	-	-	-	-	-	-
B9.40	5		ELBOW-TO-PIPE	AUG	-	-	-	-	-	-	-
1	CVCS-CHRG			OWN	-	-	-	-	-	-	-
				PRE	-	-	-	-	-	-	-
B-J	I049395		A-32	ISI	-	-	-	-	-	-	-
B9.40	4A		PIPE-TO-COUPLING	AUG	-	-	-	-	-	-	-
1	CVCS-CHRG			OWN	-	-	-	-	-	-	-
				PRE	-	-	-	-	-	-	-
B-J	I049400		A-32	ISI	-	-	-	-	-	-	-
B9.40	4		COUPLING-TO-PIPE	AUG	-	-	-	-	-	-	-
1	CVCS-CHRG			OWN	-	-	-	-	-	-	-
				PRE	-	-	-	-	-	-	-
B-J	I049405		A-32	ISI	-	-	-	-	-	-	-
B9.40	3		PIPE-TO-REDUCER	AUG	-	-	-	-	-	-	-
1	CVCS-CHRG			OWN	-	-	-	-	-	-	-
				PRE	-	-	-	-	-	-	-
B-J	I049410		A-32	ISI	-	-	-	-	-	-	-
B9.40	2		REDUCER-TO-PIPE	AUG	-	-	-	-	-	-	-
1	CVCS-CHRG			OWN	-	-	-	-	-	-	-
				PRE	-	-	-	-	-	-	-
B-J	I049415	ISI/PT/PT-106	A-32	ISI	-	-	-	-	-	s	-
B9.40	1		PIPE-TO-FLANGE(RCP-B)	AUG	-	-	-	-	-	-	-
1	CVCS-CHRG			OWN	-	-	-	-	-	-	-
				PRE	-	-	-	-	-	-	-
B-J	I049500		A-31A	ISI	-	-	-	-	-	-	-
B9.40	60		VALVE(304A)-TO-TEE	AUG	-	-	-	-	-	-	-
1	CVCS-CHRG			OWN	-	-	-	-	-	-	-
				PRE	-	-	-	-	-	-	-

Category, ItemNO, Class	Summary / CompID / System	Scope / Method / Procedure	Iso No. Comp. Desc. Code Case		Period 1 00	Period 1 02	Period 2 03	Period 2 05	Period 2 06	Period 3 08	Period 3 09
B-J	I049505		A-31A	ISI	-	-	-	-	-	-	-
B9.40	59		TEE-TO-REDUCER	AUG	-	-	-	-	-	-	-
1	CVCS-CHRG			OWN	-	-	-	-	-	-	-
				PRE	-	-	-	-	-	-	-
B-J	I049510		A-31A	ISI	-	-	-	-	-	-	-
B9.40	58		TEE-TO-VALVE(9303)	AUG	-	-	-	-	-	-	-
1	CVCS-CHRG			OWN	-	-	-	-	-	-	-
				PRE	-	-	-	-	-	-	-
B-J	I049515		A-31A	ISI	-	-	-	-	-	-	-
B9.40	57		VALVE(9303)-TO-PIPE	AUG	-	-	-	-	-	-	-
1	CVCS-CHRG			OWN	-	-	-	-	-	-	-
				PRE	-	-	-	-	-	-	-
B-J	I049520		A-31A	ISI	-	-	-	-	-	-	-
B9.40	56		PIPE-TO-ELBOW	AUG	-	-	-	-	-	-	-
1	CVCS-CHRG			OWN	-	-	-	-	-	-	-
				PRE	-	-	-	-	-	-	-
B-J	I049525		A-31A	ISI	-	-	-	-	-	-	-
B9.40	55		ELBOW-TO-PIPE	AUG	-	-	-	-	-	-	-
1	CVCS-CHRG			OWN	-	-	-	-	-	-	-
				PRE	-	-	-	-	-	-	-
B-J	I049530		A-31A	ISI	-	-	-	-	-	-	-
B9.40	54		PIPE-TO-ELBOW	AUG	-	-	-	-	-	-	-
1	CVCS-CHRG			OWN	-	-	-	-	-	-	-
				PRE	-	-	-	-	-	-	-
B-J	I049535		A-31A	ISI	-	-	-	-	-	-	-
B9.40	53		ELBOW-TO-PIPE	AUG	-	-	-	-	-	-	-
1	CVCS-CHRG			OWN	-	-	-	-	-	-	-
				PRE	-	-	-	-	-	-	-
B-J	I049540		A-31A	ISI	-	-	-	-	-	-	-
B9.40	52		PIPE-TO-ELBOW	AUG	-	-	-	-	-	-	-
1	CVCS-CHRG			OWN	-	-	-	-	-	-	-
				PRE	-	-	-	-	-	-	-
B-J	I049545		A-31A	ISI	-	-	-	-	-	-	-
B9.40	51		ELBOW-TO-PIPE	AUG	-	-	-	-	-	-	-
1	CVCS-CHRG			OWN	-	-	-	-	-	-	-
				PRE	-	-	-	-	-	-	-
B-J	I049555		A-31A	ISI	-	-	-	-	-	-	-
B9.40	50		PIPE-TO-ELBOW	AUG	-	-	-	-	-	-	-
1	CVCS-CHRG			OWN	-	-	-	-	-	-	-
				PRE	-	-	-	-	-	-	-

Category, ItemNO, Class	Summary / CompID / System	Scope / Method / Procedure	Iso No. Comp. Desc. Code Case		Period 1 00	Period 1 02	Period 2 03	Period 2 05	Period 2 06	Period 3 08	Period 3 09
B-J	I049560		A-31A	ISI	-	-	-	-	-	-	-
B9.40	49		ELBOW-TO-PIPE	AUG	-	-	-	-	-	-	-
1	CVCS-CHRG			OWN	-	-	-	-	-	-	-
				PRE	-	-	-	-	-	-	-
B-J	I049565		A-31A	ISI	-	-	-	-	-	-	-
B9.40	48		PIPE-TO-ELBOW	AUG	-	-	-	-	-	-	-
1	CVCS-CHRG			OWN	-	-	-	-	-	-	-
				PRE	-	-	-	-	-	-	-
B-J	I049570		A-31A	ISI	-	-	-	-	-	-	-
B9.40	47		ELBOW-TO-PIPE	AUG	-	-	-	-	-	-	-
1	CVCS-CHRG			OWN	-	-	-	-	-	-	-
				PRE	-	-	-	-	-	-	-
B-J	I049575		A-31A	ISI	-	-	-	-	-	-	-
B9.40	46		PIPE-TO-ELBOW	AUG	-	-	-	-	-	-	-
1	CVCS-CHRG			OWN	-	-	-	-	-	-	-
				PRE	-	-	-	-	-	-	-
B-J	I049580		A-31A	ISI	-	-	-	-	-	-	-
B9.40	45		ELBOW-TO-PIPE	AUG	-	-	-	-	-	-	-
1	CVCS-CHRG			OWN	-	-	-	-	-	-	-
				PRE	-	-	-	-	-	-	-
B-J	I049585		A-31A	ISI	-	-	-	-	-	-	-
B9.40	44		PIPE-TO-ELBOW	AUG	-	-	-	-	-	-	-
1	CVCS-CHRG			OWN	-	-	-	-	-	-	-
				PRE	-	-	-	-	-	-	-
B-J	I049590	ISI/PT/PT-106	A-31A	ISI	-	-	-	-	-	s	-
B9.40	43		ELBOW-TO-PIPE	AUG	-	-	-	-	-	-	-
1	CVCS-CHRG			OWN	-	-	-	-	-	-	-
				PRE	-	-	-	-	-	-	-
B-J	I049600		A-31A	ISI	-	-	-	-	-	-	-
B9.40	42		PIPE-TO-ELBOW	AUG	-	-	-	-	-	-	-
1	CVCS-CHRG			OWN	-	-	-	-	-	-	-
				PRE	-	-	-	-	-	-	-
B-J	I049605	ISI/PT/PT-106	A-31A	ISI	-	-	-	-	-	s	-
B9.40	41		ELBOW-TO-PIPE	AUG	-	-	-	-	-	-	-
1	CVCS-CHRG			OWN	-	-	-	-	-	-	-
				PRE	-	-	-	-	-	-	-
B-J	I049615		A-31A	ISI	-	-	-	-	-	-	-
B9.40	40		PIPE-TO-COUPLING	AUG	-	-	-	-	-	-	-
1	CVCS-CHRG			OWN	-	-	-	-	-	-	-
				PRE	-	-	-	-	-	-	-

Category, ItemNO, Class	Summary / CompID / System	Scope / Method / Procedure	Iso No. Comp. Desc. Code Case		Period 1 00	Period 1 02	Period 2 03	Period 2 05	Period 2 06	Period 3 08	Period 3 09
B-J	I049620		A-31A	ISI	-	-	-	-	-	-	-
B9.40	39		COUPLING-TO-PIPE	AUG	-	-	-	-	-	-	-
1	CVCS-CHRG			OWN	-	-	-	-	-	-	-
				PRE	-	-	-	-	-	-	-
B-J	I049635		A-31A	ISI	-	-	-	-	-	-	-
B9.40	38		PIPE-TO-ELBOW	AUG	-	-	-	-	-	-	-
1	CVCS-CHRG			OWN	-	-	-	-	-	-	-
				PRE	-	-	-	-	-	-	-
B-J	I049640		A-31A	ISI	-	-	-	-	-	-	-
B9.40	37		ELBOW-TO-PIPE	AUG	-	-	-	-	-	-	-
1	CVCS-CHRG			OWN	-	-	-	-	-	-	-
				PRE	-	-	-	-	-	-	-
B-J	I049645		A-31A	ISI	-	-	-	-	-	-	-
B9.40	36		PIPE-TO-ELBOW	AUG	-	-	-	-	-	-	-
1	CVCS-CHRG			OWN	-	-	-	-	-	-	-
				PRE	-	-	-	-	-	-	-
B-J	I049650		A-31A	ISI	-	-	-	-	-	-	-
B9.40	35		ELBOW-TO-PIPE	AUG	-	-	-	-	-	-	-
1	CVCS-CHRG			OWN	-	-	-	-	-	-	-
				PRE	-	-	-	-	-	-	-
B-J	I049660		A-31	ISI	-	-	-	-	-	-	-
B9.40	34		PIPE-TO-ELBOW	AUG	-	-	-	-	-	-	-
1	CVCS-CHRG			OWN	-	-	-	-	-	-	-
				PRE	-	-	-	-	-	-	-
B-J	I049665		A-31	ISI	-	-	-	-	-	-	-
B9.40	33		ELBOW-TO-PIPE	AUG	-	-	-	-	-	-	-
1	CVCS-CHRG			OWN	-	-	-	-	-	-	-
				PRE	-	-	-	-	-	-	-
B-J	I049670		A-31	ISI	-	-	-	-	-	-	-
B9.40	32		PIPE-TO-TEE	AUG	-	-	-	-	-	-	-
1	CVCS-CHRG			OWN	-	-	-	-	-	-	-
				PRE	-	-	-	-	-	-	-
B-J	I049675		A-31	ISI	-	-	-	-	-	-	-
B9.40	31		TEE-TO-REDUCER	AUG	-	-	-	-	-	-	-
1	CVCS-CHRG			OWN	-	-	-	-	-	-	-
				PRE	-	-	-	-	-	-	-
B-J	I049680		A-31	ISI	-	-	-	-	-	-	-
B9.40	30		TEE-TO-PIPE	AUG	-	-	-	-	-	-	-
1	CVCS-CHRG			OWN	-	-	-	-	-	-	-
				PRE	-	-	-	-	-	-	-

Category, ItemNO, Class	Summary / CompID / System	Scope / Method / Procedure	Iso No. Comp. Desc. Code Case		Period 1 00	Period 1 02	Period 2 03	Period 2 05	Period 2 06	Period 3 08	Period 3 09
B-J	I049705		A-31	ISI	-	-	-	-	-	-	-
B9.40	29		PIPE-TO-ELBOW	AUG	-	-	-	-	-	-	-
1	CVCS-CHRG			OWN	-	-	-	-	-	-	-
				PRE	-	-	-	-	-	-	-
B-J	I049710		A-31	ISI	-	-	-	-	-	-	-
B9.40	28		ELBOW-TO-PIPE	AUG	-	-	-	-	-	-	-
1	CVCS-CHRG			OWN	-	-	-	-	-	-	-
				PRE	-	-	-	-	-	-	-
B-J	I049715		A-31	ISI	-	-	-	-	-	-	-
B9.40	27		PIPE-TO-ELBOW	AUG	-	-	-	-	-	-	-
1	CVCS-CHRG			OWN	-	-	-	-	-	-	-
				PRE	-	-	-	-	-	-	-
B-J	I049720		A-31	ISI	-	-	-	-	-	-	-
B9.40	26		ELBOW-TO-PIPE	AUG	-	-	-	-	-	-	-
1	CVCS-CHRG			OWN	-	-	-	-	-	-	-
				PRE	-	-	-	-	-	-	-
B-J	I049725		A-31	ISI	-	-	-	-	-	-	-
B9.40	25		PIPE-TO-ELBOW	AUG	-	-	-	-	-	-	-
1	CVCS-CHRG			OWN	-	-	-	-	-	-	-
				PRE	-	-	-	-	-	-	-
B-J	I049730		A-31	ISI	-	-	-	-	-	-	-
B9.40	24		ELBOW-TO-PIPE	AUG	-	-	-	-	-	-	-
1	CVCS-CHRG			OWN	-	-	-	-	-	-	-
				PRE	-	-	-	-	-	-	-
B-J	I049735		A-31	ISI	-	-	-	-	-	-	-
B9.40	23		PIPE-TO-ELBOW	AUG	-	-	-	-	-	-	-
1	CVCS-CHRG			OWN	-	-	-	-	-	-	-
				PRE	-	-	-	-	-	-	-
B-J	I049740		A-31	ISI	-	-	-	-	-	-	-
B9.40	22		ELBOW-TO-PIPE	AUG	-	-	-	-	-	-	-
1	CVCS-CHRG			OWN	-	-	-	-	-	-	-
				PRE	-	-	-	-	-	-	-
B-J	I049745		A-31	ISI	-	-	-	-	-	-	-
B9.40	21		PIPE-TO-ELBOW	AUG	-	-	-	-	-	-	-
1	CVCS-CHRG			OWN	-	-	-	-	-	-	-
				PRE	-	-	-	-	-	-	-
B-J	I049750	ISI/PT/PT-106	A-31	ISI	-	-	-	s	-	-	-
B9.40	20		ELBOW-TO-PIPE	AUG	-	-	-	-	-	-	-
1	CVCS-CHRG			OWN	-	-	-	-	-	-	-
				PRE	-	-	-	-	-	-	-

Category, ItemNO, Class	Summary / CompID / System	Scope / Method / Procedure	Iso No. Comp. Desc. Code Case		Period 1 00	Period 1 02	Period 2 03	Period 2 05	Period 2 06	Period 3 08	Period 3 09
B-J	I049765	ISI/PT/PT-106	A-31	ISI	-	-	-	s	-	-	-
B9.40	19		PIPE-TO-ELBOW	AUG	-	-	-	-	-	-	-
1	CVCS-CHRG			OWN	-	-	-	-	-	-	-
				PRE	-	-	-	-	-	-	-
B-J	I049770		A-31	ISI	-	-	-	-	-	-	-
B9.40	18		ELBOW-TO-PIPE	AUG	-	-	-	-	-	-	-
1	CVCS-CHRG			OWN	-	-	-	-	-	-	-
				PRE	-	-	-	-	-	-	-
B-J	I049775		A-31	ISI	-	-	-	-	-	-	-
B9.40	17		PIPE-TO-ELBOW	AUG	-	-	-	-	-	-	-
1	CVCS-CHRG			OWN	-	-	-	-	-	-	-
				PRE	-	-	-	-	-	-	-
B-J	I049780		A-31	ISI	-	-	-	-	-	-	-
B9.40	16		ELBOW-TO-PIPE	AUG	-	-	-	-	-	-	-
1	CVCS-CHRG			OWN	-	-	-	-	-	-	-
				PRE	-	-	-	-	-	-	-
B-J	I049790		A-31	ISI	-	-	-	-	-	-	-
B9.40	15		PIPE-TO-ELBOW	AUG	-	-	-	-	-	-	-
1	CVCS-CHRG			OWN	-	-	-	-	-	-	-
				PRE	-	-	-	-	-	-	-
B-J	I049795		A-31	ISI	-	-	-	-	-	-	-
B9.40	14		ELBOW-TO-VALVE(302D)	AUG	-	-	-	-	-	-	-
1	CVCS-CHRG			OWN	-	-	-	-	-	-	-
				PRE	-	-	-	-	-	-	-
B-J	I049800		A-31	ISI	-	-	-	-	-	-	-
B9.40	13		VALVE(302D)-TO-PIPE	AUG	-	-	-	-	-	-	-
1	CVCS-CHRG			OWN	-	-	-	-	-	-	-
				PRE	-	-	-	-	-	-	-
B-J	I049805		A-31	ISI	-	-	-	-	-	-	-
B9.40	12		PIPE-TO-FLANGE	AUG	-	-	-	-	-	-	-
1	CVCS-CHRG			OWN	-	-	-	-	-	-	-
				PRE	-	-	-	-	-	-	-
B-J	I049810		A-31	ISI	-	-	-	-	-	-	-
B9.40	11		FLANGE-TO-PIPE	AUG	-	-	-	-	-	-	-
1	CVCS-CHRG			OWN	-	-	-	-	-	-	-
				PRE	-	-	-	-	-	-	-
B-J	I049815		A-31	ISI	-	-	-	-	-	-	-
B9.40	10		PIPE-TO-TEE	AUG	-	-	-	-	-	-	-
1	CVCS-CHRG			OWN	-	-	-	-	-	-	-
				PRE	-	-	-	-	-	-	-

Category, ItemNO, Class	Summary / CompID / System	Scope / Method / Procedure	Iso No. Comp. Desc. Code Case		Period 1 00	Period 1 02	Period 2 03	Period 2 05	Period 2 06	Period 3 08	Period 3 09
B-J	I049820		A-31	ISI	-	-	-	-	-	-	-
B9.40	9		TEE-TO-REDUCER	AUG	-	-	-	-	-	-	-
1	CVCS-CHRG			OWN	-	-	-	-	-	-	-
				PRE	-	-	-	-	-	-	-
B-J	I049825		A-31	ISI	-	-	-	-	-	-	-
B9.40	8		TEE-TO-PIPE	AUG	-	-	-	-	-	-	-
1	CVCS-CHRG			OWN	-	-	-	-	-	-	-
				PRE	-	-	-	-	-	-	-
B-J	I049830		A-31	ISI	-	-	-	-	-	-	-
B9.40	7		PIPE-TO-VALVE(304C)	AUG	-	-	-	-	-	-	-
1	CVCS-CHRG			OWN	-	-	-	-	-	-	-
				PRE	-	-	-	-	-	-	-
B-J	I049835		A-31	ISI	-	-	-	-	-	-	-
B9.40	6		VALVE(304C)-TO-PIPE	AUG	-	-	-	-	-	-	-
1	CVCS-CHRG			OWN	-	-	-	-	-	-	-
				PRE	-	-	-	-	-	-	-
B-J	I049840		A-31	ISI	-	-	-	-	-	-	-
B9.40	5		PIPE-TO-ELBOW	AUG	-	-	-	-	-	-	-
1	CVCS-CHRG			OWN	-	-	-	-	-	-	-
				PRE	-	-	-	-	-	-	-
B-J	I049845		A-31	ISI	-	-	-	-	-	-	-
B9.40	4		ELBOW-TO-PIPE	AUG	-	-	-	-	-	-	-
1	CVCS-CHRG			OWN	-	-	-	-	-	-	-
				PRE	-	-	-	-	-	-	-
B-J	I049850		A-31	ISI	-	-	-	-	-	-	-
B9.40	3		PIPE-TO-REDUCER	AUG	-	-	-	-	-	-	-
1	CVCS-CHRG			OWN	-	-	-	-	-	-	-
				PRE	-	-	-	-	-	-	-
B-J	I049855		A-31	ISI	-	-	-	-	-	-	-
B9.40	2		REDUCER-TO-PIPE	AUG	-	-	-	-	-	-	-
1	CVCS-CHRG			OWN	-	-	-	-	-	-	-
				PRE	-	-	-	-	-	-	-
B-J	I049860	ISI/PT/PT-106	A-31	ISI	-	-	-	-	-	s	-
B9.40	1		PIPE-TO-FLANGE(RCP-A)	AUG	-	-	-	-	-	-	-
1	CVCS-CHRG			OWN	-	-	-	-	-	-	-
				PRE	-	-	-	-	-	-	-
B-J	I050730	ISI/PT/PT-106	A-25	ISI	-	-	-	-	-	s	-
B9.40	21B	PSI/PT/PT-106	VALVE(9314)-TO-PIPE	AUG	-	-	-	-	-	-	-
1	CVCS-CHRG	PSI/PT/PT-106		OWN	-	-	-	-	-	-	-
				PRE	-	-	c	b	-	-	-

Category, ItemNO, Class	Summary / CompID / System	Scope / Method / Procedure	Iso No. Comp. Desc. Code Case		Period 1 00	Period 1 02	Period 2 03	Period 2 05	Period 2 06	Period 3 08	Period 3 09
B-J	I050735		A-25	ISI	-	-	-	-	-	-	-
B9.40	21E		PIPE-TO-TEE	AUG	-	-	-	-	-	-	-
1	CVCS-CHRG			OWN	-	-	-	-	-	-	-
				PRE	-	-	-	-	-	-	-
B-J	I050745	ISI/PT/PT-106	A-25	ISI	-	-	-	s	-	-	-
B9.40	21C		TEE-TO-REDUCER	AUG	-	-	-	-	-	-	-
1	CVCS-CHRG			OWN	-	-	-	-	-	-	-
				PRE	-	-	-	-	-	-	-
B-J	I050749	ISI/PT/PT-106	A-25	ISI	-	-	-	-	-	s	-
B9.40	21F		TEE-TO-PIPE	AUG	-	-	-	-	-	-	-
1	CVCS-CHRG			OWN	-	-	-	-	-	-	-
				PRE	-	-	-	-	-	-	-
B-J	I050750	ISI/PT/PT-106	A-25	ISI	-	-	-	s	-	-	-
B9.40	22		PIPE-TO-VALVE(295)	AUG	-	-	-	-	-	-	-
1	CVCS-CHRG			OWN	-	-	-	-	-	-	-
				PRE	-	-	-	-	-	-	-
B-J	I050800		A-25	ISI	-	-	-	-	-	-	-
B9.40	23		VALVE(295)-TO-PIPE	AUG	-	-	-	-	-	-	-
1	RC			OWN	-	-	-	-	-	-	-
				PRE	-	-	-	-	-	-	-
B-J	I050900		A-25	ISI	-	-	-	-	-	-	-
B9.40	24		PIPE-TO-ELBOW	AUG	-	-	-	-	-	-	-
1	RC			OWN	-	-	-	-	-	-	-
				PRE	-	-	-	-	-	-	-
B-J	I051000		A-25	ISI	-	-	-	-	-	-	-
B9.40	25		ELBOW-TO-PIPE	AUG	-	-	-	-	-	-	-
1	RC			OWN	-	-	-	-	-	-	-
				PRE	-	-	-	-	-	-	-
B-J	I051100		A-25	ISI	-	-	-	-	-	-	-
B9.40	26		PIPE-TO-ELBOW	AUG	-	-	-	-	-	-	-
1	RC			OWN	-	-	-	-	-	-	-
				PRE	-	-	-	-	-	-	-
B-J	I051200	ISI/PT/PT-106	A-25	ISI	c	-	-	-	-	-	-
B9.40	27		ELBOW-TO-PIPE	AUG	-	-	-	-	-	-	-
1	RC			OWN	-	-	-	-	-	-	-
				PRE	-	-	-	-	-	-	-
B-J	I051300	ISI/PT/PT-106	A-25	ISI	-	-	-	-	s	-	-
B9.40	28		PIPE-TO-NOZZLE	AUG	-	-	-	-	-	-	-
1	RC			OWN	-	-	-	-	-	-	-
				PRE	-	-	-	-	-	-	-

Category, ItemNO, Class	Summary / CompID / System	Scope / Method / Procedure	Iso No. Comp. Desc. Code Case		Period 1 00	Period 1 02	Period 2 03	Period 2 05	Period 2 06	Period 3 08	Period 3 09
B-J	I051400	ISI/PT/PT-106	A-26	ISI	-	-	-	s	-	-	-
B9.40	20		VALVE(392B)-TO-PIPE	AUG	-	-	-	-	-	-	-
1	CVCS-CHRG			OWN	-	-	-	-	-	-	-
				PRE	-	-	-	-	-	-	-
B-J	I051600	ISI/PT/PT-106	A-26	ISI	-	-	-	-	s	-	-
B9.40	21		PIPE-TO-ELBOW	AUG	-	-	-	-	-	-	-
1	CVCS-CHRG			OWN	-	-	-	-	-	-	-
				PRE	-	-	-	-	-	-	-
B-J	I051700	ISI/PT/PT-106	A-26	ISI	-	-	-	-	-	s	-
B9.40	22		ELBOW-TO-PIPE	AUG	-	-	-	-	-	-	-
1	CVCS-CHRG			OWN	-	-	-	-	-	-	-
				PRE	-	-	-	-	-	-	-
B-J	I051800	ISI/PT/PT-106	A-26	ISI	-	-	-	-	-	s	-
B9.40	23		PIPE-TO-ELBOW	AUG	-	-	-	-	-	-	-
1	CVCS-CHRG			OWN	-	-	-	-	-	-	-
				PRE	-	-	-	-	-	-	-
B-J	I051900		A-26	ISI	-	-	-	-	-	-	-
B9.40	24		ELBOW-TO-PIPE	AUG	-	-	-	-	-	-	-
1	CVCS-CHRG			OWN	-	-	-	-	-	-	-
				PRE	-	-	-	-	-	-	-
B-J	I052000		A-26	ISI	-	-	-	-	-	-	-
B9.40	25		PIPE-TO-ELBOW	AUG	-	-	-	-	-	-	-
1	CVCS-CHRG			OWN	-	-	-	-	-	-	-
				PRE	-	-	-	-	-	-	-
B-J	I052100		A-26	ISI	-	-	-	-	-	-	-
B9.40	26		ELBOW-TO-PIPE	AUG	-	-	-	-	-	-	-
1	CVCS-CHRG			OWN	-	-	-	-	-	-	-
				PRE	-	-	-	-	-	-	-
B-J	I052200		A-26	ISI	-	-	-	-	-	-	-
B9.40	27		PIPE-TO-ELBOW	AUG	-	-	-	-	-	-	-
1	CVCS-CHRG			OWN	-	-	-	-	-	-	-
				PRE	-	-	-	-	-	-	-
B-J	I052300	ISI/PT/PT-106	A-26	ISI	-	-	-	-	s	-	-
B9.40	28		ELBOW-TO-PIPE	AUG	-	-	-	-	-	-	-
1	CVCS-CHRG			OWN	-	-	-	-	-	-	-
				PRE	-	-	-	-	-	-	-
B-J	I052400	ISI/PT/PT-106	A-26	ISI	-	-	-	-	-	s	-
B9.40	29		PIPE-TO-ELBOW	AUG	-	-	-	-	-	-	-
1	CVCS-CHRG			OWN	-	-	-	-	-	-	-
				PRE	-	-	-	-	-	-	-

Category, ItemNO, Class	Summary / CompID / System	Scope / Method / Procedure	Iso No. Comp. Desc. Code Case		Period 1 00	Period 1 02	Period 2 03	Period 2 05	Period 2 06	Period 3 08	Period 3 09
B-J	I052500	ISI/PT/PT-106	A-26	ISI	-	-	-	s	-	-	-
B9.40	30		ELBOW-TO-PIPE	AUG	-	-	-	-	-	-	-
1	CVCS-CHRG			OWN	-	-	-	-	-	-	-
				PRE	-	-	-	-	-	-	-
B-J	I052700	ISI/PT/PT-106	A-26	ISI	-	-	-	s	-	-	-
B9.40	32		PIPE-TO-COUPLING	AUG	-	-	-	-	-	-	-
1	CVCS-CHRG			OWN	-	-	-	-	-	-	-
				PRE	-	-	-	-	-	-	-
B-J	I052800	ISI/PT/PT-106	A-26	ISI	-	-	-	-	-	s	-
B9.40	33		COUPLING-TO-PIPE	AUG	-	-	-	-	-	-	-
1	CVCS-CHRG			OWN	-	-	-	-	-	-	-
				PRE	-	-	-	-	-	-	-
B-J	I052900		A-26	ISI	-	-	-	-	-	-	-
B9.40	34		PIPE-TO-ELBOW	AUG	-	-	-	-	-	-	-
1	CVCS-CHRG			OWN	-	-	-	-	-	-	-
				PRE	-	-	-	-	-	-	-
B-J	I053000	ISI/PT/PT-106	A-26	ISI	-	-	c	-	-	-	-
B9.40	35		PIPE-TO-ELBOW	AUG	-	-	-	-	-	-	-
1	CVCS-CHRG			OWN	-	-	-	-	-	-	-
				PRE	-	-	-	-	-	-	-
B-J	I053100		A-26	ISI	-	-	-	-	-	-	-
B9.40	36		ELBOW-TO-PIPE	AUG	-	-	-	-	-	-	-
1	CVCS-CHRG			OWN	-	-	-	-	-	-	-
				PRE	-	-	-	-	-	-	-
B-J	I053200	ISI/PT/PT-106	A-26	ISI	-	-	c	-	-	-	-
B9.40	37		PIPE-TO-VALVE(383A)	AUG	-	-	-	-	-	-	-
1	CVCS-CHRG			OWN	-	-	-	-	-	-	-
				PRE	-	-	-	-	-	-	-
B-J	I053300	AUG/PT/PT-106	A-26	ISI	-	-	-	-	-	-	-
B9.40	38	AUG/UT/UT-202	VALVE(383A)-TO-PIPE	AUG	-	c	-	b	-	b	-
1	RC	AUG/UT/UT-202		OWN	-	-	-	-	-	-	-
		AUG/PT/PT-106		PRE	-	-	-	-	-	-	-
B-J	I053400		A-26	ISI	-	-	-	-	-	-	-
B9.40	39		PIPE-TO-ELBOW	AUG	-	-	-	-	-	-	-
1	RC			OWN	-	-	-	-	-	-	-
				PRE	-	-	-	-	-	-	-
B-J	I053500		A-26	ISI	-	-	-	-	-	-	-
B9.40	40		ELBOW-TO-PIPE	AUG	-	-	-	-	-	-	-
1	RC			OWN	-	-	-	-	-	-	-
				PRE	-	-	-	-	-	-	-

Category, ItemNO, Class	Summary / CompID / System	Scope / Method / Procedure	Iso No. Comp. Desc. Code Case		Period 1 00	Period 1 02	Period 2 03	Period 2 05	Period 2 06	Period 3 08	Period 3 09
B-J	I053600		A-26	ISI	-	-	-	-	-	-	-
B9.40	41		PIPE-TO-ELBOW	AUG	-	-	-	-	-	-	-
1	RC			OWN	-	-	-	-	-	-	-
				PRE	-	-	-	-	-	-	-
B-J	I053700	ISI/PT/PT-106	A-26	ISI	-	-	c	-	-	-	-
B9.40	42		ELBOW-TO-PIPE	AUG	-	-	-	-	-	-	-
1	RC			OWN	-	-	-	-	-	-	-
				PRE	-	-	-	-	-	-	-
B-J	I053800	ISI/PT/PT-106	A-26	ISI	c	-	-	-	-	-	-
B9.40	43		PIPE-TO-NOZZLE	AUG	-	-	-	-	-	-	-
1	RC			OWN	-	-	-	-	-	-	-
				PRE	-	-	-	-	-	-	-
B-J	I054930	ISI/PT/PT-106	A-27	ISI	-	-	-	s	-	-	-
B9.40	9B		VALVE(9315)-TO-TEE	AUG	-	-	-	-	-	-	-
1	CVCS-CHRG			OWN	-	-	-	-	-	-	-
				PRE	-	-	-	-	-	-	-
B-J	I054960	ISI/PT/PT-106	A-27	ISI	-	-	-	s	-	-	-
B9.40	9D		TEE-TO-REDUCING INSERT	AUG	-	-	-	-	-	-	-
1	CVCS-CHRG			OWN	-	-	-	-	-	-	-
				PRE	-	-	-	-	-	-	-
B-J	I054980	ISI/PT/PT-106	A-27	ISI	-	-	-	s	-	-	-
B9.40	9E		TEE-TO-PIPE	AUG	-	-	-	-	-	-	-
1	CVCS-CHRG			OWN	-	-	-	-	-	-	-
				PRE	-	-	-	-	-	-	-
B-J	I055000		A-27	ISI	-	-	-	-	-	-	-
B9.40	10		PIPE-TO-VALVE(393)	AUG	-	-	-	-	-	-	-
1	CVCS-CHRG			OWN	-	-	-	-	-	-	-
				PRE	-	-	-	-	-	-	-
B-J	I055100	AUG/PT/PT-106	A-27	ISI	-	-	-	-	-	-	-
B9.40	11	AUG/UT/UT-202	VALVE(393)-TO-PIPE	AUG	-	c	-	b	-	b	-
1	RC	AUG/UT/UT-202		OWN	-	-	-	-	-	-	-
		AUG/PT/PT-106		PRE	-	-	-	-	-	-	-
B-J	I055300	ISI/PT/PT-106	A-27	ISI	-	-	-	s	-	-	-
B9.40	12		PIPE-TO-NOZZLE	AUG	-	-	-	-	-	-	-
1	RC			OWN	-	-	-	-	-	-	-
				PRE	-	-	-	-	-	-	-
B-J	I055400		A-22	ISI	-	-	-	-	-	-	-
B9.40	1A		TEE-TO-PIPE	AUG	-	-	-	-	-	-	-
1	RC			OWN	-	-	-	-	-	-	-
				PRE	-	-	-	-	-	-	-

Category, ItemNO, Class	Summary / CompID / System	Scope / Method / Procedure	Iso No. Comp. Desc. Code Case		Period 1 00	Period 1 02	Period 2 03	Period 2 05	Period 2 06	Period 3 08	Period 3 09
B-J	I055600		A-22	ISI	-	-	-	-	-	-	-
B9.40	2A		PIPE-TO-VALVE(503)	AUG	-	-	-	-	-	-	-
1	RC			OWN	-	-	-	-	-	-	-
				PRE	-	-	-	-	-	-	-
B-J	I055700		A-22	ISI	-	-	-	-	-	-	-
B9.40	3A		VALVE(503)-TO-PIPE	AUG	-	-	-	-	-	-	-
1	RC			OWN	-	-	-	-	-	-	-
				PRE	-	-	-	-	-	-	-
B-J	I055800	ISI/PT/PT-106	A-22	ISI	-	c	-	-	-	-	-
B9.40	4		PIPE-TO-VALVE(541)	AUG	-	-	-	-	-	-	-
1	RC			OWN	-	-	-	-	-	-	-
				PRE	-	-	-	-	-	-	-
B-J	I055910		A-22	ISI	-	-	-	-	-	-	-
B9.40	6		PIPE-TO-TEE	AUG	-	-	-	-	-	-	-
1	RC			OWN	-	-	-	-	-	-	-
				PRE	-	-	-	-	-	-	-
B-J	I055920		A-22	ISI	-	-	-	-	-	-	-
B9.40	7		TEE-TO-PIPE	AUG	-	-	-	-	-	-	-
1	RC			OWN	-	-	-	-	-	-	-
				PRE	-	-	-	-	-	-	-
B-J	I055930		A-22	ISI	-	-	-	-	-	-	-
B9.40	8		PIPE-TO-ELBOW	AUG	-	-	-	-	-	-	-
1	RC			OWN	-	-	-	-	-	-	-
				PRE	-	-	-	-	-	-	-
B-J	I055940		A-22	ISI	-	-	-	-	-	-	-
B9.40	9		ELBOW-TO-PIPE	AUG	-	-	-	-	-	-	-
1	RC			OWN	-	-	-	-	-	-	-
				PRE	-	-	-	-	-	-	-
B-J	I055950		A-22	ISI	-	-	-	-	-	-	-
B9.40	10		PIPE-TO-REDUCER	AUG	-	-	-	-	-	-	-
1	RC			OWN	-	-	-	-	-	-	-
				PRE	-	-	-	-	-	-	-
B-J	I055960		A-22	ISI	-	-	-	-	-	-	-
B9.40	11		TEE-TO-PIPE	AUG	-	-	-	-	-	-	-
1	RC			OWN	-	-	-	-	-	-	-
				PRE	-	-	-	-	-	-	-
B-J	I055970		A-22	ISI	-	-	-	-	-	-	-
B9.40	12		PIPE-TO-VALVE(524)	AUG	-	-	-	-	-	-	-
1	RC			OWN	-	-	-	-	-	-	-
				PRE	-	-	-	-	-	-	-

Category, ItemNO, Class	Summary / CompID / System	Scope / Method / Procedure	Iso No. Comp. Desc. Code Case		Period 1 00	Period 1 02	Period 2 03	Period 2 05	Period 2 06	Period 3 08	Period 3 09
B-J	I055980		A-22	ISI	-	-	-	-	-	-	-
B9.40	13		VALVE(524)-TO-PIPE	AUG	-	-	-	-	-	-	-
1	RC			OWN	-	-	-	-	-	-	-
				PRE	-	-	-	-	-	-	-
B-J	I055990		A-22	ISI	-	-	-	-	-	-	-
B9.40	14		PIPE-TO-VALVE(523)	AUG	-	-	-	-	-	-	-
1	RC			OWN	-	-	-	-	-	-	-
				PRE	-	-	-	-	-	-	-
B-J	I056000	ISI/PT/PT-106	A-23A	ISI	c	-	-	-	-	-	-
B9.40	1A		TEE-TO-PIPE	AUG	-	-	-	-	-	-	-
1	RC			OWN	-	-	-	-	-	-	-
				PRE	-	-	-	-	-	-	-
B-J	I056100		A-23A	ISI	-	-	-	-	-	-	-
B9.40	2A		PIPE-TO-VALVE(507)	AUG	-	-	-	-	-	-	-
1	RC			OWN	-	-	-	-	-	-	-
				PRE	-	-	-	-	-	-	-
B-J	I056200		A-23A	ISI	-	-	-	-	-	-	-
B9.40	3A		VALVE(507)-TO-PIPE	AUG	-	-	-	-	-	-	-
1	RC			OWN	-	-	-	-	-	-	-
				PRE	-	-	-	-	-	-	-
B-J	I056300		A-23A	ISI	-	-	-	-	-	-	-
B9.40	4A		PIPE-TO-VALVE(540)	AUG	-	-	-	-	-	-	-
1	RC			OWN	-	-	-	-	-	-	-
				PRE	-	-	-	-	-	-	-
B-K	I001400	ISI/MT/MT-105	A-1A	ISI	-	-	-	-	-	-	s
B10.10	RPV-VSL-1	ISI/UT/UT-203	INTEGRAL WELDED SUP.88D-30M	AUG	-	-	-	-	-	-	-
1	RPV			OWN	-	-	-	-	-	-	-
				PRE	-	-	-	-	-	-	-
B-K	I001500		A-1A	ISI	-	-	-	-	-	-	-
B10.10	RPV-VSL-2		INTEGRAL WELDED SUP.268D-30M	AUG	-	-	-	-	-	-	-
1	RPV			OWN	-	-	-	-	-	-	-
				PRE	-	-	-	-	-	-	-
B-K	I005400	ISI/MT/MT-105	A-4	ISI	-	-	-	-	-	s	-
B10.10	PRZSSW (IA)		PZR SUPPORT SKIRT WELD	AUG	-	-	-	-	-	-	-
1	PZR			OWN	-	-	-	-	-	-	-
				PRE	-	-	-	-	-	-	-
B-K	I015650	ISI/PT/PT-106	A-10	ISI	-	c	-	-	-	-	-
B10.20	RCU-22 (IA)		INTEGRAL ATTACHMENT	AUG	-	-	-	-	-	-	-
1	PZR			OWN	-	-	-	-	-	-	-
				PRE	-	-	-	-	-	-	-

Category, ItemNO, Class	Summary / CompID / System	Scope / Method / Procedure	Iso No. Comp. Desc. Code Case		Period 1 00	Period 1 02	Period 2 03	Period 2 05	Period 2 06	Period 3 08	Period 3 09
B-K	I023400		A-11	ISI	-	-	-	-	-	-	-
B10.20	CVU-71 (IA)		INTEGRAL ATTACHMENT	AUG	-	-	-	-	-	-	-
1	CVCS-CHRG			OWN	-	-	-	-	-	-	-
				PRE	-	-	-	-	-	-	-
B-K	I024700	ISI/PT/PT-106	A-11	ISI	-	c	-	-	-	-	-
B10.20	CVU-76 (IA)		INTEGRAL ATTACHMENT	AUG	-	-	-	-	-	-	-
1	CVCS-CHRG			OWN	-	-	-	-	-	-	-
				PRE	-	-	-	-	-	-	-
B-K	I025825		A-11	ISI	-	-	-	-	-	-	-
B10.20	CVU-1 (IA)		INTEGRAL ATTACHMENT	AUG	-	-	-	-	-	-	-
1	PZR			OWN	-	-	-	-	-	-	-
				PRE	-	-	-	-	-	-	-
B-K	I029000	ISI/PT/PT-106	A-14	ISI	-	-	c	-	-	-	-
B10.20	SIU-53 (IA)		INTEGRAL ATTACHMENT	AUG	-	-	-	-	-	-	-
1	RHR			OWN	-	-	-	-	-	-	-
				PRE	-	-	-	-	-	-	-
B-K	I034525	ISI/PT/PT-106	A-17	ISI	-	c	-	-	-	-	-
B10.20	SIU-3 (IA)		INTEGRAL ATTACHMENT	AUG	-	-	-	-	-	-	-
1	HPSI			OWN	-	-	-	-	-	-	-
				PRE	-	-	-	-	-	-	-
B-K	I036400		A-18	ISI	-	-	-	-	-	-	-
B10.20	RHU-22 (IA)		INTEGRAL ATTACHMENT	AUG	-	-	-	-	-	-	-
1	RC			OWN	-	-	-	-	-	-	-
				PRE	-	-	-	-	-	-	-
B-K	I037700	ISI/PT/PT-106	A-14	ISI	-	-	-	-	-	s	-
B10.20	RHU-10 (IA)		INTEGRAL ATTACHMENT	AUG	-	-	-	-	-	-	-
1	RC			OWN	-	-	-	-	-	-	-
				PRE	-	-	-	-	-	-	-
B-K	I046000		A-23	ISI	-	-	-	-	-	-	-
B10.20	CVU-31 (IA)		INTEGRAL ATTACHMENT	AUG	-	-	-	-	-	-	-
1	CVCS-LTDN			OWN	-	-	-	-	-	-	-
				PRE	-	-	-	-	-	-	-
B-K	I046800	ISI/PT/PT-106	A-23	ISI	-	-	-	s	-	-	-
B10.20	CVU-29 (IA)		INTEGRAL ATTACHMENT	AUG	-	-	-	-	-	-	-
1	CVCS-LTDN			OWN	-	-	-	-	-	-	-
				PRE	-	-	-	-	-	-	-
B-K	I049041		A-32A	ISI	-	-	-	-	-	-	-
B10.20	CVU-90 (IA)		INTEGRAL ATTACHMENT	AUG	-	-	-	-	-	-	-
1	CVCS-CHRG			OWN	-	-	-	-	-	-	-
				PRE	-	-	-	-	-	-	-

Category, ItemNO, Class	Summary / CompID / System	Scope / Method / Procedure	Iso No. Comp. Desc. Code Case		Period 1 00	Period 1 02	Period 2 03	Period 2 05	Period 2 06	Period 3 08	Period 3 09
B-K	I049596		A-31A	ISI	-	-	-	-	-	-	-
B10.20	CVU-172 (IA)		INTEGRAL ATTACHMENT	AUG	-	-	-	-	-	-	-
1	CVCS-CHRG			OWN	-	-	-	-	-	-	-
				PRE	-	-	-	-	-	-	-
B-K	I049756		A-31	ISI	-	-	-	-	-	-	-
B10.20	CVU-187 (IA)		INTEGRAL ATTACHMENT	AUG	-	-	-	-	-	-	-
1	CVCS-CHRG			OWN	-	-	-	-	-	-	-
				PRE	-	-	-	-	-	-	-
B-K	I052525		A-26	ISI	-	-	-	-	-	-	-
B10.20	CVU-24 (IA)		INTEGRAL ATTACHMENT	AUG	-	-	-	-	-	-	-
1	CVCS-CHRG			OWN	-	-	-	-	-	-	-
				PRE	-	-	-	-	-	-	-
B-K	I057010	ISI/PT/PT-106	A-7	ISI	-	-	c	-	-	-	-
B10.30	RCP-A SUPPORT #1 (IA)		INTEGRAL ATTACHMENT	AUG	-	-	-	-	-	-	-
1	RC			OWN	-	-	-	-	-	-	-
				PRE	-	-	-	-	-	-	-
B-K	I057020	OWN/PT/PT-106	A-7	ISI	-	-	-	-	-	-	-
B10.30	RCP-A SUPPORT #2 (IA)		INTEGRAL ATTACHMENT	AUG	-	-	-	-	-	-	-
1	RC			OWN	-	-	c	-	-	-	-
				PRE	-	-	-	-	-	-	-
B-K	I057030	OWN/PT/PT-106	A-7	ISI	-	-	-	-	-	-	-
B10.30	RCP-A SUPPORT #3 (IA)		INTEGRAL ATTACHMENT	AUG	-	-	-	-	-	-	-
1	RC			OWN	-	-	c	-	-	-	-
				PRE	-	-	-	-	-	-	-
B-K	I057910	OWN/PT/PT-106	A-7	ISI	-	-	-	-	-	-	-
B10.30	RCP-B SUPPORT #1 (IA)		INTEGRAL ATTACHMENT	AUG	-	-	-	-	-	-	-
1	RC			OWN	-	-	-	s	-	-	-
				PRE	-	-	-	-	-	-	-
B-K	I057920	OWN/PT/PT-106	A-7	ISI	-	-	-	-	-	-	-
B10.30	RCP-B SUPPORT #2 (IA)		INTEGRAL ATTACHMENT	AUG	-	-	-	-	-	-	-
1	RC			OWN	-	-	-	s	-	-	-
				PRE	-	-	-	-	-	-	-
B-K	I057930	OWN/PT/PT-106	A-7	ISI	-	-	-	-	-	-	-
B10.30	RCP-B SUPPORT #3 (IA)		INTEGRAL ATTACHMENT	AUG	-	-	-	-	-	-	-
1	RC			OWN	-	-	-	s	-	-	-
				PRE	-	-	-	-	-	-	-
BK-NR	I008001		A-8	ISI	-	-	-	-	-	-	-
B10.10	RHE-2-PR1 (IA)		INTEGRAL ATTACHMENT	AUG	-	-	-	-	-	-	-
1	CVCS-LTDN			OWN	-	-	-	-	-	-	-
				PRE	-	-	-	-	-	-	-

Category, ItemNO, Class	Summary / CompID / System	Scope / Method / Procedure	Iso No. Comp. Desc. Code Case		Period 1 00	Period 1 02	Period 2 03	Period 2 05	Period 2 06	Period 3 08	Period 3 09
BK-NR	I008101		A-8	ISI	-	-	-	-	-	-	-
B10.10	RHE-2-PR2 (IA)		INTEGRAL ATTACHMENT	AUG	-	-	-	-	-	-	-
1	CVCS-LTDN			OWN	-	-	-	-	-	-	-
				PRE	-	-	-	-	-	-	-
BK-NR	I008601		A-8	ISI	-	-	-	-	-	-	-
B10.10	RHE-5-PR1 (IA)		INTEGRAL ATTACHMENT	AUG	-	-	-	-	-	-	-
1	CVCS-LTDN			OWN	-	-	-	-	-	-	-
				PRE	-	-	-	-	-	-	-
BK-NR	I008701		A-8	ISI	-	-	-	-	-	-	-
B10.10	RHE-5-PR2 (IA)		INTEGRAL ATTACHMENT	AUG	-	-	-	-	-	-	-
1	CVCS-LTDN			OWN	-	-	-	-	-	-	-
				PRE	-	-	-	-	-	-	-
BK-NR	I009201		A-8	ISI	-	-	-	-	-	-	-
B10.10	RHE-8-PR1 (IA)		INTEGRAL ATTACHMENT	AUG	-	-	-	-	-	-	-
1	CVCS-LTDN			OWN	-	-	-	-	-	-	-
				PRE	-	-	-	-	-	-	-
BK-NR	I009301		A-8	ISI	-	-	-	-	-	-	-
B10.10	RHE-8-PR2 (IA)		INTEGRAL ATTACHMENT	AUG	-	-	-	-	-	-	-
1	CVCS-LTDN			OWN	-	-	-	-	-	-	-
				PRE	-	-	-	-	-	-	-
B-L-1	I056510		A-7	ISI	-	-	-	-	-	-	-
B12.10	RCP-A WELD A		PUMP CASING WELD	AUG	-	-	-	-	-	-	-
1	RC			OWN	-	-	-	-	-	-	-
				PRE	-	-	-	-	-	-	-
B-L-1	I056520		A-7	ISI	-	-	-	-	-	-	-
B12.10	RCP-A WELD B		PUMP CASING WELD	AUG	-	-	-	-	-	-	-
1	RC			OWN	-	-	-	-	-	-	-
				PRE	-	-	-	-	-	-	-
B-L-1	I056530		A-7	ISI	-	-	-	-	-	-	-
B12.10	RCP-A WELD C		PUMP CASING WELD	AUG	-	-	-	-	-	-	-
1	RC			OWN	-	-	-	-	-	-	-
				PRE	-	-	-	-	-	-	-
B-L-1	I057410	ISI/VT/VT-103	A-7	ISI	-	-	-	s	-	-	-
B12.10	RCP-B WELD A		PUMP CASING WELD	AUG	-	-	-	-	-	-	-
1	RC		N-481	OWN	-	-	-	-	-	-	-
				PRE	-	-	-	-	-	-	-
B-L-1	I057420	ISI/VT/VT-103	A-7	ISI	-	-	-	s	-	-	-
B12.10	RCP-B WELD B		PUMP CASING WELD	AUG	-	-	-	-	-	-	-
1	RC		N-481	OWN	-	-	-	-	-	-	-
				PRE	-	-	-	-	-	-	-

Category, ItemNO, Class	Summary / CompID / System	Scope / Method / Procedure	Iso No. Comp. Desc. Code Case		Period 1 00	Period 1 02	Period 2 03	Period 2 05	Period 2 06	Period 3 08	Period 3 09
B-L-1	I057430	ISI/VT/VT-103	A-7	ISI	-	-	-	s	-	-	-
B12.10	RCP-B WELD C		PUMP CASING WELD	AUG	-	-	-	-	-	-	-
1	RC		N-481	OWN	-	-	-	-	-	-	-
				PRE	-	-	-	-	-	-	-
B-L-2	I056540	ISI/VT/VT-105	A-7	ISI	r	r	r	t	t	t	t
B12.20	RCP-A (INTERNAL SURFACES)	ISI/VT/VT-105	PUMP CASING INTERNAL SURFACES	AUG	-	-	-	-	-	-	-
1	RC			OWN	-	-	-	-	-	-	-
				PRE	-	-	-	-	-	-	-
B-L-2	I057440	ISI/VT/VT-105	A-7	ISI	r	r	r	t	t	t	t
B12.20	RCP-B (INTERNAL SURFACES)	ISI/VT/VT-105	PUMP CASING INTERNAL SURFACES	AUG	-	-	-	-	-	-	-
1	RC			OWN	-	-	-	-	-	-	-
				PRE	-	-	-	-	-	-	-
B-M-1	I058700	ISI/UT/UT-202	A-15	ISI	r	r	r	t	t	t	t
B12.40	V-700-1 (BODY WELD)	ISI/UT/UT-202	10" VELAN MOTOR OPER. GATE VALVE 1500#	AUG	-	-	-	-	-	-	-
1	RHR			OWN	-	-	-	-	-	-	-
				PRE	-	-	-	-	-	-	-
B-M-1	I058800	ISI/UT/UT-202	A-15	ISI	r	r	r	t	t	t	t
B12.40	V-700-2 (BODY WELD)	ISI/UT/UT-202	10" VELAN MOTOR OPER. GATE VALVE 1500#	AUG	-	-	-	-	-	-	-
1	RHR			OWN	-	-	-	-	-	-	-
				PRE	-	-	-	-	-	-	-
B-M-1	I059000	ISI/UT/UT-202	A-15	ISI	r	r	r	t	t	t	t
B12.40	V-701-1 (BODY WELD)	ISI/UT/UT-202	10" VELAN MOTOR OPER. GATE VALVE 1500#	AUG	-	-	-	-	-	-	-
1	RHR			OWN	-	-	-	-	-	-	-
				PRE	-	-	-	-	-	-	-
B-M-1	I059005	ISI/UT/UT-202	A-15	ISI	r	r	r	t	t	t	t
B12.40	V-701-2 (BODY WELD)	ISI/UT/UT-202	10" VELAN MOTOR OPER. GATE VALVE 1500#	AUG	-	-	-	-	-	-	-
1	RHR			OWN	-	-	-	-	-	-	-
				PRE	-	-	-	-	-	-	-
B-M-1	I059200	ISI/UT/UT-202	A-14	ISI	r	r	r	t	t	t	s
B12.40	V-720-1 (BODY WELD)	ISI/UT/UT-202	10" VELAN MOTOR OPER. GATE VALVE 1500#	AUG	-	-	-	-	-	-	-
1	RHR			OWN	-	-	-	-	-	-	-
				PRE	-	-	-	-	-	-	-
B-M-1	I059205	ISI/UT/UT-202	A-14	ISI	r	r	r	t	t	t	s
B12.40	V-720-2 (BODY WELD)	ISI/UT/UT-202	10" VELAN MOTOR OPER. GATE VALVE 1500#	AUG	-	-	-	-	-	-	-
1	RHR			OWN	-	-	-	-	-	-	-
				PRE	-	-	-	-	-	-	-
B-M-1	I059400	ISI/UT/UT-202	A-14	ISI	r	r	r	t	t	t	t
B12.40	V-721-1 (BODY WELD)	ISI/UT/UT-202	10" VELAN MOTOR OPER. GATE VALVE 1500#	AUG	-	-	-	-	-	-	-
1	RHR			OWN	-	-	-	-	-	-	-
				PRE	-	-	-	-	-	-	-

Category, ItemNO, Class	Summary / CompID / System	Scope / Method / Procedure	Iso No. Comp. Desc. Code Case		Period 1 00	Period 1 02	Period 2 03	Period 2 05	Period 2 06	Period 3 08	Period 3 09
B-M-1	I059405	ISI/UT/UT-202	A-14	ISI	r	r	r	t	t	t	t
B12.40	V-721-2 (BODY WELD)	ISI/UT/UT-202	10" VELAN MOTOR OPER. GATE VALVE 1500#	AUG	-	-	-	-	-	-	-
1	RHR			OWN	-	-	-	-	-	-	-
				PRE	-	-	-	-	-	-	-
B-M-2	I058310	ISI/VT/VT-105	A-16	ISI	r	r	r	t	t	t	t
B12.50	V-842A (INTERNAL SURFACES)	ISI/VT/VT-105	10" DARLING CHECK VALVE	AUG	-	-	-	-	-	-	-
1	HPSI			OWN	-	-	-	-	-	-	-
				PRE	-	-	-	-	-	-	-
B-M-2	I058410	ISI/VT/VT-105	A-17	ISI	r	r	r	t	t	t	t
B12.50	V-842B (INTERNAL SURFACES)	ISI/VT/VT-105	10" DARLING CHECK VALVE	AUG	-	-	-	-	-	-	-
1	HPSI			OWN	-	-	-	-	-	-	-
				PRE	-	-	-	-	-	-	-
B-M-2	I058510	ISI/VT/VT-105	A-16	ISI	r	r	r	t	t	t	t
B12.50	V-867A (INTERNAL SURFACES)	ISI/VT/VT-105	10" DARLING CHECK VALVE	AUG	-	-	-	-	-	-	-
1	HPSI			OWN	-	-	-	-	-	-	-
				PRE	-	-	-	-	-	-	-
B-M-2	I058610	ISI/VT/VT-105	A-17	ISI	r	r	r	t	t	t	t
B12.50	V-867B (INTERNAL SURFACES)	ISI/VT/VT-105	10" DARLING CHECK VALVE	AUG	-	-	-	-	-	-	-
1	HPSI			OWN	-	-	-	-	-	-	-
				PRE	-	-	-	-	-	-	-
B-M-2	I058810	ISI/VT/VT-105	A-15	ISI	r	r	r	t	t	t	t
B12.50	V-700 (INTERNAL SURFACES)	ISI/VT/VT-105	10" VELAN MOTOR OPER. GATE VALVE 1500#	AUG	-	-	-	-	-	-	-
1	RHR			OWN	-	-	-	-	-	-	-
				PRE	-	-	-	-	-	-	-
B-M-2	I059010	ISI/VT/VT-105	A-15	ISI	r	r	r	t	t	t	t
B12.50	V-701 (INTERNAL SURFACES)	ISI/VT/VT-105	10" VELAN MOTOR OPER. GATE VALVE 1500#	AUG	-	-	-	-	-	-	-
1	RHR			OWN	-	-	-	-	-	-	-
				PRE	-	-	-	-	-	-	-
B-M-2	I059210	ISI/VT/VT-105	A-14	ISI	r	r	r	t	t	t	s
B12.50	V-720 (INTERNAL SURFACES)	ISI/VT/VT-105	10" VELAN MOTOR OPER. GATE VALVE 1500#	AUG	-	-	-	-	-	-	-
1	RHR			OWN	-	-	-	-	-	-	-
				PRE	-	-	-	-	-	-	-
B-M-2	I059410	ISI/VT/VT-105	A-14	ISI	r	r	r	t	t	t	t
B12.50	V-721 (INTERNAL SURFACES)	ISI/VT/VT-105	10" VELAN MOTOR OPER. GATE VALVE 1500#	AUG	-	-	-	-	-	-	-
1	RHR			OWN	-	-	-	-	-	-	-
				PRE	-	-	-	-	-	-	-
B-M-2	I059610	ISI/VT/VT-105	A-14	ISI	r	r	r	t	t	t	t
B12.50	V-853A (INTERNAL SURFACES)	ISI/VT/VT-105	6" VELAN CHECK VALVE	AUG	-	-	-	-	-	-	-
1	RC			OWN	-	-	-	-	-	-	-
				PRE	-	-	-	-	-	-	-

Category, ItemNO, Class	Summary / CompID / System	Scope / Method / Procedure	Iso No. Comp. Desc. Code Case		Period 1 00	Period 1 02	Period 2 03	Period 2 05	Period 2 06	Period 3 08	Period 3 09
B-M-2	I059710	ISI/VT/VT-105	A-18	ISI	r	r	r	t	t	t	t
B12.50	V-853B (INTERNAL SURFACES)	ISI/VT/VT-105	6" VELAN CHECK VALVE	AUG	-	-	-	-	-	-	-
1	RC			OWN	-	-	-	-	-	-	-
				PRE	-	-	-	-	-	-	-
B-M-2	I059810	ISI/VT/VT-105	A-14	ISI	r	r	r	t	t	t	t
B12.50	V-852A (INTERNAL SURFACES)	ISI/VT/VT-105	6" VELAN MOTOR OPER. GATE VALVE	AUG	-	-	-	-	-	-	-
1	RC			OWN	-	-	-	-	-	-	-
				PRE	-	-	-	-	-	-	-
B-M-2	I059910	ISI/VT/VT-105	A-18	ISI	r	r	r	t	t	t	t
B12.50	V-852B (INTERNAL SURFACES)	ISI/VT/VT-105	6" VELAN MOTOR OPER. GATE VALVE	AUG	-	-	-	-	-	-	-
1	RC			OWN	-	-	-	-	-	-	-
				PRE	-	-	-	-	-	-	-
B-N-1	I000700	ISI/VT/VT-110	A-1	ISI	-	c	-	-	-	-	-
B13.10	RPV INTERIOR		VESSEL INTERIOR	AUG	-	-	-	-	-	-	-
1	RPV			OWN	-	-	-	-	-	-	-
				PRE	-	-	-	-	-	-	-
B-N-1	I000701	ISI/VT/VT-110	A-1	ISI	-	-	-	s	-	-	-
B13.10	RPV INTERIOR		VESSEL INTERIOR	AUG	-	-	-	-	-	-	-
1	RPV			OWN	-	-	-	-	-	-	-
				PRE	-	-	-	-	-	-	-
B-N-1	I000702	ISI/VT/VT-110	A-1	ISI	-	-	-	-	-	s	-
B13.10	RPV INTERIOR		VESSEL INTERIOR	AUG	-	-	-	-	-	-	-
1	RPV			OWN	-	-	-	-	-	-	-
				PRE	-	-	-	-	-	-	-
B-N-2	I000910		A-1	ISI	-	-	-	-	-	-	-
B13.50	RPV INT ATTACH IN BELTLINE		ATTACHMENTS WITHIN BELTLINE REGION	AUG	-	-	-	-	-	-	-
1	RPV			OWN	-	-	-	-	-	-	-
				PRE	-	-	-	-	-	-	-
B-N-2	I000920	ISI/VT/VT-110	A-1	ISI	-	-	-	-	-	-	s
B13.60	RPV INT ATTACH OUT BELTLINE		ATTACHMENTS BEYOND BELTLINE REGION	AUG	-	-	-	-	-	-	-
1	RPV			OWN	-	-	-	-	-	-	-
				PRE	-	-	-	-	-	-	-
B-N-3	I000800	ISI/VT/VT-110	A-1	ISI	-	-	-	-	-	-	s
B13.70	RPV CORE SUPPORT STRUCTURE		CORE SUPPORT STRUCTURE	AUG	-	-	-	-	-	-	-
1	RPV			OWN	-	-	-	-	-	-	-
				PRE	-	-	-	-	-	-	-
BO	I001823	PSI/PT/PT-106	A-1	ISI	-	-	-	-	-	-	-
---	DRIVE #1	PSI/UT/UT-210	CONTROL ROD DRIVE HOUSING	AUG	-	-	-	-	-	-	-
1	RPV	PSI/UT/UT-210		OWN	-	-	-	-	-	-	-
		PSI/UT/UT-210		PRE	-	-	c	-	-	-	-

Category, ItemNO, Class	Summary / CompID / System	Scope / Method / Procedure	Iso No. Comp. Desc. Code Case		Period 1 00	Period 1 02	Period 2 03	Period 2 05	Period 2 06	Period 3 08	Period 3 09
BO	I001824	PSI/PT/PT-106	A-1	ISI	-	-	-	-	-	-	-
----	DRIVE #6	PSI/UT/UT-210	CONTROL ROD DRIVE HOUSING	AUG	-	-	-	-	-	-	-
1	RPV	PSI/UT/UT-210		OWN	-	-	-	-	-	-	-
		PSI/UT/UT-210		PRE	-	-	c	-	-	-	-
BO	I001825	PSI/PT/PT-106	A-1	ISI	-	-	-	-	-	-	-
----	DRIVE #7	PSI/UT/UT-210	CONTROL ROD DRIVE HOUSING	AUG	-	-	-	-	-	-	-
1	RPV	PSI/UT/UT-210		OWN	-	-	-	-	-	-	-
		PSI/UT/UT-210		PRE	-	-	c	-	-	-	-
BO	I001826	PSI/PT/PT-106	A-1	ISI	-	-	-	-	-	-	-
----	DRIVE #8	PSI/UT/UT-210	CONTROL ROD DRIVE HOUSING	AUG	-	-	-	-	-	-	-
1	RPV	PSI/UT/UT-210		OWN	-	-	-	-	-	-	-
		PSI/UT/UT-210		PRE	-	-	c	-	-	-	-
BO	I001827	PSI/PT/PT-106	A-1	ISI	-	-	-	-	-	-	-
----	DRIVE #9	PSI/UT/UT-210	CONTROL ROD DRIVE HOUSING	AUG	-	-	-	-	-	-	-
1	RPV	PSI/UT/UT-210		OWN	-	-	-	-	-	-	-
		PSI/UT/UT-210		PRE	-	-	c	-	-	-	-
BO	I001828	PSI/PT/PT-106	A-1	ISI	-	-	-	-	-	-	-
----	DRIVE #10	PSI/UT/UT-210	CONTROL ROD DRIVE HOUSING	AUG	-	-	-	-	-	-	-
1	RPV	PSI/UT/UT-210		OWN	-	-	-	-	-	-	-
		PSI/UT/UT-210		PRE	-	-	c	-	-	-	-
BO	I001829	PSI/PT/PT-106	A-1	ISI	-	-	-	-	-	-	-
----	DRIVE #11	PSI/UT/UT-210	CONTROL ROD DRIVE HOUSING	AUG	-	-	-	-	-	-	-
1	RPV	PSI/UT/UT-210		OWN	-	-	-	-	-	-	-
		PSI/UT/UT-210		PRE	-	-	c	-	-	-	-
BO	I001830	PSI/PT/PT-106	A-1	ISI	-	-	-	-	-	-	-
----	DRIVE #12	PSI/UT/UT-210	CONTROL ROD DRIVE HOUSING	AUG	-	-	-	-	-	-	-
1	RPV	PSI/UT/UT-210		OWN	-	-	-	-	-	-	-
		PSI/UT/UT-210		PRE	-	-	c	-	-	-	-
BO	I001831	PSI/PT/PT-106	A-1	ISI	-	-	-	-	-	-	-
----	DRIVE #13	PSI/UT/UT-210	CONTROL ROD DRIVE HOUSING	AUG	-	-	-	-	-	-	-
1	RPV	PSI/UT/UT-210		OWN	-	-	-	-	-	-	-
		PSI/UT/UT-210		PRE	-	-	c	-	-	-	-
BO	I001832	PSI/PT/PT-106	A-1	ISI	-	-	-	-	-	-	-
----	DRIVE #15	PSI/UT/UT-210	CONTROL ROD DRIVE HOUSING	AUG	-	-	-	-	-	-	-
1	RPV	PSI/UT/UT-210		OWN	-	-	-	-	-	-	-
		PSI/UT/UT-210		PRE	-	-	c	-	-	-	-
BO	I001833	PSI/PT/PT-106	A-1	ISI	-	-	-	-	-	-	-
----	DRIVE #17	PSI/UT/UT-210	CONTROL ROD DRIVE HOUSING	AUG	-	-	-	-	-	-	-
1	RPV	PSI/UT/UT-210		OWN	-	-	-	-	-	-	-
		PSI/UT/UT-210		PRE	-	-	c	-	-	-	-

Category, ItemNO, Class	Summary / CompID / System	Scope / Method / Procedure	Iso No. Comp. Desc. Code Case		Period 1 00	Period 1 02	Period 2 03	Period 2 05	Period 2 06	Period 3 08	Period 3 09
BO	I001834	PSI/PT/PT-106	A-1	ISI	-	-	-	-	-	-	-
---	DRIVE #22	PSI/UT/UT-210	CONTROL ROD DRIVE HOUSING	AUG	-	-	-	-	-	-	-
1	RPV	PSI/UT/UT-210		OWN	-	-	-	-	-	-	-
		PSI/UT/UT-210		PRE	-	-	c	-	-	-	-
B-O	I001803	PSI/PT/PT-106	A-1	ISI	-	-	-	-	-	-	-
B14.10	DRIVE #30	PSI/UT/UT-210	CONTROL ROD DRIVE HOUSING	AUG	-	-	-	-	-	-	-
1	RPV	PSI/UT/UT-210		OWN	-	-	-	-	-	-	-
		PSI/UT/UT-210		PRE	-	-	c	-	-	-	-
B-O	I001804	PSI/PT/PT-106	A-1	ISI	-	-	-	-	-	-	-
B14.10	DRIVE #14	PSI/UT/UT-210	CONTROL ROD DRIVE HOUSING	AUG	-	-	-	-	-	-	-
1	RPV	PSI/UT/UT-210		OWN	-	-	-	-	-	-	-
		PSI/UT/UT-210		PRE	-	-	c	-	-	-	-
B-O	I001805	PSI/PT/PT-106	A-1	ISI	-	-	-	-	-	-	-
B14.10	DRIVE #18	PSI/UT/UT-210	CONTROL ROD DRIVE HOUSING	AUG	-	-	-	-	-	-	-
1	RPV	PSI/UT/UT-210		OWN	-	-	-	-	-	-	-
		PSI/UT/UT-210		PRE	-	-	c	-	-	-	-
B-O	I001806	PSI/PT/PT-106	A-1	ISI	-	-	-	-	-	-	-
B14.10	DRIVE #34	PSI/UT/UT-210	CONTROL ROD DRIVE HOUSING	AUG	-	-	-	-	-	-	-
1	RPV	PSI/UT/UT-210		OWN	-	-	-	-	-	-	-
		PSI/UT/UT-210		PRE	-	-	c	-	-	-	-
B-O	I001807	PSI/PT/PT-106	A-1	ISI	-	-	-	-	-	-	-
B14.10	DRIVE #26	PSI/UT/UT-210	CONTROL ROD DRIVE HOUSING	AUG	-	-	-	-	-	-	-
1	RPV	PSI/UT/UT-210		OWN	-	-	-	-	-	-	-
		PSI/UT/UT-210		PRE	-	-	c	-	-	-	-
B-O	I001808	PSI/PT/PT-106	A-1	ISI	-	-	-	-	-	-	-
B14.10	DRIVE #27	PSI/UT/UT-210	CONTROL ROD DRIVE HOUSING	AUG	-	-	-	-	-	-	-
1	RPV	PSI/UT/UT-210		OWN	-	-	-	-	-	-	-
		PSI/UT/UT-210		PRE	-	-	c	-	-	-	-
B-O	I001809	PSI/PT/PT-106	A-1	ISI	-	-	-	-	-	-	-
B14.10	DRIVE #23	PSI/UT/UT-210	CONTROL ROD DRIVE HOUSING	AUG	-	-	-	-	-	-	-
1	RPV	PSI/UT/UT-210		OWN	-	-	-	-	-	-	-
		PSI/UT/UT-210		PRE	-	-	c	-	-	-	-
B-O	I001810	PSI/PT/PT-106	A-1	ISI	-	-	-	-	-	-	-
B14.10	DRIVE #19	PSI/UT/UT-210	CONTROL ROD DRIVE HOUSING	AUG	-	-	-	-	-	-	-
1	RPV	PSI/UT/UT-210		OWN	-	-	-	-	-	-	-
		PSI/UT/UT-210		PRE	-	-	c	-	-	-	-
B-O	I001811	PSI/PT/PT-106	A-1	ISI	-	-	-	-	-	-	-
B14.10	DRIVE #35	PSI/UT/UT-210	CONTROL ROD DRIVE HOUSING	AUG	-	-	-	-	-	-	-
1	RPV	PSI/UT/UT-210		OWN	-	-	-	-	-	-	-
		PSI/UT/UT-210		PRE	-	-	c	-	-	-	-

Category, ItemNO, Class	Summary / CompID / System	Scope / Method / Procedure	Iso No. Comp. Desc. Code Case		Period 1 00	Period 1 02	Period 2 03	Period 2 05	Period 2 06	Period 3 08	Period 3 09
B-O	I001812	PSI/PT/PT-106	A-1	ISI	-	-	-	-	-	-	-
B14.10	DRIVE #31	PSI/UT/UT-210	CONTROL ROD DRIVE HOUSING	AUG	-	-	-	-	-	-	-
1	RPV	PSI/UT/UT-210		OWN	-	-	-	-	-	-	-
		PSI/UT/UT-210		PRE	-	-	c	-	-	-	-
B-O	I001813	PSI/PT/PT-106	A-1	ISI	-	-	-	-	-	-	s
B14.10	DRIVE #32	PSI/UT/UT-210	CONTROL ROD DRIVE HOUSING	AUG	-	-	-	-	-	-	-
1	RPV	PSI/UT/UT-210		OWN	-	-	-	-	-	-	-
		PSI/UT/UT-210		PRE	-	-	c	-	-	-	-
B-O	I001814	PSI/PT/PT-106	A-1	ISI	-	-	-	-	-	-	-
B14.10	DRIVE #16	PSI/UT/UT-210	CONTROL ROD DRIVE HOUSING	AUG	-	-	-	-	-	-	-
1	RPV	PSI/UT/UT-210		OWN	-	-	-	-	-	-	-
		PSI/UT/UT-210		PRE	-	-	c	-	-	-	-
B-O	I001815	PSI/PT/PT-106	A-1	ISI	-	-	-	-	-	-	-
B14.10	DRIVE #20	PSI/UT/UT-210	CONTROL ROD DRIVE HOUSING	AUG	-	-	-	-	-	-	-
1	RPV	PSI/UT/UT-210		OWN	-	-	-	-	-	-	-
		PSI/UT/UT-210		PRE	-	-	c	-	-	-	-
B-O	I001817	PSI/PT/PT-106	A-1	ISI	-	-	-	-	-	-	s
B14.10	DRIVE #28	PSI/UT/UT-210	CONTROL ROD DRIVE HOUSING	AUG	-	-	-	-	-	-	-
1	RPV	PSI/UT/UT-210		OWN	-	-	-	-	-	-	-
		PSI/UT/UT-210		PRE	-	-	c	-	-	-	-
B-O	I001818	PSI/PT/PT-106	A-1	ISI	-	-	-	-	-	-	-
B14.10	DRIVE #29	PSI/UT/UT-210	CONTROL ROD DRIVE HOUSING	AUG	-	-	-	-	-	-	-
1	RPV	PSI/UT/UT-210		OWN	-	-	-	-	-	-	-
		PSI/UT/UT-210		PRE	-	-	c	-	-	-	-
B-O	I001819	PSI/PT/PT-106	A-1	ISI	-	-	-	-	-	-	-
B14.10	DRIVE #25	PSI/UT/UT-210	CONTROL ROD DRIVE HOUSING	AUG	-	-	-	-	-	-	-
1	RPV	PSI/UT/UT-210		OWN	-	-	-	-	-	-	-
		PSI/UT/UT-210		PRE	-	-	c	-	-	-	-
B-O	I001820	PSI/PT/PT-106	A-1	ISI	-	-	-	-	-	-	-
B14.10	DRIVE #21	PSI/UT/UT-210	CONTROL ROD DRIVE HOUSING	AUG	-	-	-	-	-	-	-
1	RPV	PSI/UT/UT-210		OWN	-	-	-	-	-	-	-
		PSI/UT/UT-210		PRE	-	-	c	-	-	-	-
B-O	I001821	PSI/PT/PT-106	A-1	ISI	-	-	-	-	-	-	s
B14.10	DRIVE #37	PSI/UT/UT-210	CONTROL ROD DRIVE HOUSING	AUG	-	-	-	-	-	-	-
1	RPV	PSI/UT/UT-210		OWN	-	-	-	-	-	-	-
		PSI/UT/UT-210		PRE	-	-	c	-	-	-	-
B-O	I001822	PSI/PT/PT-106	A-1	ISI	-	-	-	-	-	-	-
B14.10	DRIVE #33	PSI/UT/UT-210	CONTROL ROD DRIVE HOUSING	AUG	-	-	-	-	-	-	-
1	RPV	PSI/UT/UT-210		OWN	-	-	-	-	-	-	-
		PSI/UT/UT-210		PRE	-	-	c	-	-	-	-

Category, ItemNO, Class	Summary / CompID / System	Scope / Method / Procedure	Iso No. Comp. Desc. Code Case		Period 1 00	Period 1 02	Period 2 03	Period 2 05	Period 2 06	Period 3 08	Period 3 09
B-O	I001835	PSI/PT/PT-106	A-1	ISI	-	-	-	-	-	-	-
B14.10	DRIVE #24	PSI/UT/UT-210	CONTROL ROD DRIVE HOUSING	AUG	-	-	-	-	-	-	-
1	RPV	PSI/UT/UT-210		OWN	-	-	-	-	-	-	-
		PSI/UT/UT-210		PRE	-	-	c	-	-	-	-
B-P	I411000	ISI/VT/VT-109	L-1	ISI	c	B	B	b	b	b	b
B15.XX	PT-7 LEAKAGE TEST OF	ISI/VT/VT-109	REACTOR COOLANT SYSTEM	AUG	-	-	-	-	-	-	-
1	RC	ISI/VT/VT-109		OWN	-	-	-	-	-	-	-
		ISI/VT/VT-109		PRE	-	-	-	-	-	-	-
B-Q	I802500	ISI/ET/ET-109	*	ISI	-	-	-	t	t	t	t
B16.20	OPEN GENERATOR TUBES		BOBBIN COIL - 100% FL	AUG	-	-	-	-	-	-	-
1	SG			OWN	-	-	-	-	-	-	-
				PRE	-	-	-	-	-	-	-
B-Q	I802700		*	ISI	-	-	-	t	t	t	t
B16.20	OPEN GENERATOR TUBES		BOBBIN COIL - 20% MIN FL - S/G A	AUG	-	-	-	-	-	-	-
1	SG			OWN	-	-	-	-	-	-	-
				PRE	-	-	-	-	-	-	-
B-Q	I802710	ISI/VT/VT-103	*	ISI	-	c	-	t	t	t	t
B16.20	GENERATOR TUBES		REPAIRED WELDED PLUGS - S/G A	AUG	-	-	-	-	-	-	-
1	SG			OWN	-	-	-	-	-	-	-
				PRE	-	-	-	-	-	-	-
B-Q	I802720	ISI/VT/VT-103	*	ISI	-	r	-	t	t	t	t
B16.20	GENERATOR TUBES		REPAIRED SLEEVES - S/G A	AUG	-	-	-	-	-	-	-
1	SG			OWN	-	-	-	-	-	-	-
				PRE	-	-	-	-	-	-	-
B-Q	I802730	ISI/ET/ET-109	*	ISI	-	c	-	b	b	b	b
B16.20	DIAGNOSTIC EXAM	ISI/ET/ET-109	SAMPLING HS AREAS - S/G A	AUG	-	-	-	-	-	-	-
1	SG			OWN	-	-	-	-	-	-	-
				PRE	-	-	-	-	-	-	-
B-Q	I802740		*	ISI	-	-	-	t	t	t	t
B16.20	OPEN GENERATOR TUBES		PREV IDENT DEGRAD > 20% - S/G A	AUG	-	-	-	-	-	-	-
1	SG			OWN	-	-	-	-	-	-	-
				PRE	-	-	-	-	-	-	-
B-Q	I802800	ISI/ET/ET-109	*	ISI	-	c	-	b	-	-	b
B16.20	OPEN GENERATOR TUBES	ISI/ET/ET-109	BOBBIN COIL - 50% FL - S/G A	AUG	-	-	-	-	-	-	-
1	SG			OWN	-	-	-	-	-	-	-
				PRE	-	-	-	-	-	-	-
B-Q	I802850	ISI/ET/ET-109	*	ISI	-	c	-	b	-	-	b
B16.20	TUBE-TUBE PROXIMITY	ISI/ET/ET-109	OUTER RAD. U-BEND - S/G A	AUG	-	-	-	-	-	-	-
1	SG			OWN	-	-	-	-	-	-	-
				PRE	-	-	-	-	-	-	-

Category, ItemNO, Class	Summary / CompID / System	Scope / Method / Procedure	Iso No. Comp. Desc. Code Case		Period 1 00	Period 1 02	Period 2 03	Period 2 05	Period 2 06	Period 3 08	Period 3 09
B-Q	I803500	ISI/ET/ET-109	*	ISI	-	-	-	t	t	t	t
B16.20	OPEN GENERATOR TUBES		BOBBIN COIL - 100% FL - S/G B	AUG	-	-	-	-	-	-	-
1	SG			OWN	-	-	-	-	-	-	-
				PRE	-	-	-	-	-	-	-
B-Q	I803700	ISI/ET/ET-109	*	ISI	-	-	-	t	t	t	t
B16.20	OPEN GENERATOR TUBES		BOBBIN COIL - 20% MIN FL - S/G B	AUG	-	-	-	-	-	-	-
1	SG			OWN	-	-	-	-	-	-	-
				PRE	-	-	-	-	-	-	-
B-Q	I803710	ISI/VT/VT-103	*	ISI	-	c	-	t	t	t	t
B16.20	GENERATOR TUBES		REPAIRED WELDED PLUGS - S/G B	AUG	-	-	-	-	-	-	-
1	SG			OWN	-	-	-	-	-	-	-
				PRE	-	-	-	-	-	-	-
B-Q	I803720	ISI/VT/VT-103	*	ISI	-	r	-	t	t	t	t
B16.20	GENERATOR TUBES		REPAIRED SLEEVES - S/G B	AUG	-	-	-	-	-	-	-
1	SG			OWN	-	-	-	-	-	-	-
				PRE	-	-	-	-	-	-	-
B-Q	I803730	ISI/ET/ET-109	*	ISI	-	c	-	b	b	b	b
B16.20	DIAGNOSTIC EXAM	ISI/ET/ET-109	SAMPLING HS AREAS - S/G B	AUG	-	-	-	-	-	-	-
1	SG			OWN	-	-	-	-	-	-	-
				PRE	-	-	-	-	-	-	-
B-Q	I803740	ISI/ET/ET-109	*	ISI	-	-	-	t	t	t	t
B16.20	OPEN GENERATOR TUBES		PREV IDENT DEGRAD > 20% - S/G B	AUG	-	-	-	-	-	-	-
1	SG			OWN	-	-	-	-	-	-	-
				PRE	-	-	-	-	-	-	-
B-Q	I803800	ISI/ET/ET-109	*	ISI	-	c	-	b	-	-	b
B16.20	OPEN GENERATOR TUBES	ISI/ET/ET-109	BOBBIN COIL - 50% FL - S/G B	AUG	-	-	-	-	-	-	-
1	SG			OWN	-	-	-	-	-	-	-
				PRE	-	-	-	-	-	-	-
B-Q	I803850	ISI/ET/ET-109	*	ISI	-	c	-	b	-	-	b
B16.20	TUBE-TUBE PROXIMITY	ISI/ET/ET-109	OUTER RAD. U-BEND - S/G B	AUG	-	-	-	-	-	-	-
1	SG			OWN	-	-	-	-	-	-	-
				PRE	-	-	-	-	-	-	-
C-A	I070900	ISI/UT/REG-AUT14	B-1	ISI	-	c	-	-	-	-	-
C1.10	LST-AR	ISI/UT/REG-UT33	LOWER SHELL-TO-TRANSITION CIRC WELD	AUG	-	-	-	-	-	-	-
2	SG	ISI/UT/REG-AUT14		OWN	-	-	-	-	-	-	-
				PRE	-	-	-	-	-	-	-
C-A	I071000	ISI/UT/UT-203	B-1	ISI	-	-	-	-	-	-	s
C1.10	TUS-AR		TRANSITION-TO-UPPER SHELL CIRC WELD	AUG	-	-	-	-	-	-	-
2	SG			OWN	-	-	-	-	-	-	-
				PRE	-	-	-	-	-	-	-

Category, ItemNO, Class	Summary / CompID / System	Scope / Method / Procedure	Iso No. Comp. Desc. Code Case		Period 1 00	Period 1 02	Period 2 03	Period 2 05	Period 2 06	Period 3 08	Period 3 09
C-A	I071600		B-1	ISI	-	-	-	-	-	-	-
C1.10	LST-BR		LOWER SHELL-TO-TRANSITION CIRC WELD	AUG	-	-	-	-	-	-	-
2	SG			OWN	-	-	-	-	-	-	-
				PRE	-	-	-	-	-	-	-
C-A	I071700		B-1	ISI	-	-	-	-	-	-	-
C1.10	TUS-BR		TRANSITION-TO-UPPER SHELL CIRC WELD	AUG	-	-	-	-	-	-	-
2	SG			OWN	-	-	-	-	-	-	-
				PRE	-	-	-	-	-	-	-
C-A	I169000	ISI/UT/UT-203	B-109	ISI	-	-	-	-	-	s	-
C1.10	LSFWRHE-1A		LOWER SHELL-TO-FLANGE CIRC WELD	AUG	-	-	-	-	-	-	-
2	RHR			OWN	-	-	-	-	-	-	-
				PRE	-	-	-	-	-	-	-
C-A	I169200		B-109	ISI	-	-	-	-	-	-	-
C1.10	LSFWRHE-1B		LOWER SHELL-TO-FLANGE CIRC WELD	AUG	-	-	-	-	-	-	-
2	RHR			OWN	-	-	-	-	-	-	-
				PRE	-	-	-	-	-	-	-
C-A	I071100	ISI/UT/REG-AUT14	B-1	ISI	-	c	-	-	-	-	-
C1.20	USH-AR	ISI/UT/REG-UT33	UPPER SHELL-TO-HEAD CIRC WELD	AUG	-	-	-	-	-	-	-
2	SG	ISI/UT/REG-UT33		OWN	-	-	-	-	-	-	-
		ISI/UT/REG-UT33		PRE	-	-	-	-	-	-	-
C-A	I071800	ISI/UT/REG-AUT14	B-1	ISI	-	-	-	-	-	-	-
C1.20	USH-BR	ISI/UT/REG-AUT14	UPPER SHELL-TO-HEAD CIRC WELD	AUG	-	-	-	-	-	-	-
2	SG			OWN	-	-	-	-	-	-	-
				PRE	-	-	-	-	-	-	-
C-A	I169020		B-109	ISI	-	-	-	-	-	-	-
C1.20	LHLSWRHE-1A		LOWER HEAD-TO LOWER SHELL CIRC WELD	AUG	-	-	-	-	-	-	-
2	RHR			OWN	-	-	-	-	-	-	-
				PRE	-	-	-	-	-	-	-
C-A	I169220	ISI/UT/UT-203	B-109	ISI	-	-	-	s	-	-	-
C1.20	LHLSWRHE-1B		LOWER HEAD-TO-LOWER SHELL CIRC WELD	AUG	-	-	-	-	-	-	-
2	RHR			OWN	-	-	-	-	-	-	-
				PRE	-	-	-	-	-	-	-
C-A	I070700		B-1	ISI	-	-	-	-	-	-	-
C1.30	TSSW-AR		TUBE SHEET-TO-SHELL WELD	AUG	-	-	-	-	-	-	-
2	SG			OWN	-	-	-	-	-	-	-
				PRE	-	-	-	-	-	-	-
C-A	I071400	ISI/UT/UT-203	B-1	ISI	-	-	-	-	s	-	-
C1.30	TSSW-BR		TUBE SHEET-TO-SHELL WELD	AUG	-	-	-	-	-	-	-
2	SG			OWN	-	-	-	-	-	-	-
				PRE	-	-	-	-	-	-	-

Category, ItemNO, Class	Summary / CompID / System	Scope / Method / Procedure	Iso No. Comp. Desc. Code Case		Period 1 00	Period 1 02	Period 2 03	Period 2 05	Period 2 06	Period 3 08	Period 3 09
C-B	I071200		B-1	ISI	-	-	-	-	-	-	-
C2.21	FWIN-AR		FEEDWATER INLET NOZZLE TO VESSEL WELD	AUG	-	-	-	-	-	-	-
2	SG			OWN	-	-	-	-	-	-	-
				PRE	-	-	-	-	-	-	-
C-B	I071900	ISI/MT/MT-105	B-1	ISI	-	-	-	-	-	-	s
C2.21	FWIN-BR	ISI/UT/UT-203	FEEDWATER INLET NOZZLE TO VESSEL WELD	AUG	-	-	-	-	-	-	-
2	SG			OWN	-	-	-	-	-	-	-
				PRE	-	-	-	-	-	-	-
C-B	I071250		B-1	ISI	-	-	-	-	-	-	-
C2.22	FWIN-AR		FEEDWATER INLET NOZZLE INSIDE RADIUS	AUG	-	-	-	-	-	-	-
2	SG			OWN	-	-	-	-	-	-	-
				PRE	-	-	-	-	-	-	-
C-B	I071950	ISI/UT/UT-205	B-1	ISI	-	-	-	-	-	-	s
C2.22	FWIN-BR		FEEDWATER INLET NOZZLE INSIDE RADIUS	AUG	-	-	-	-	-	-	-
2	SG			OWN	-	-	-	-	-	-	-
				PRE	-	-	-	-	-	-	-
C-B	I169070		B-109	ISI	-	-	-	-	-	-	-
C2.31	IRPRHE-1A		INLET REINFORCING PLATE WLD	AUG	-	-	-	-	-	-	-
2	RHR			OWN	-	-	-	-	-	-	-
				PRE	-	-	-	-	-	-	-
C-B	I169090	ISI/PT/PT-106	B-109	ISI	-	-	-	s	-	-	-
C2.31	ORPRHE-1A		OUTLET REINFORCING PLATE WLD	AUG	-	-	-	-	-	-	-
2	RHR			OWN	-	-	-	-	-	-	-
				PRE	-	-	-	-	-	-	-
C-B	I169270	ISI/PT/PT-106	B-109	ISI	-	-	-	s	-	-	-
C2.31	IRPRHE-1B		INLET REINFORCING PLATE WELD	AUG	-	-	-	-	-	-	-
2	RHR			OWN	-	-	-	-	-	-	-
				PRE	-	-	-	-	-	-	-
C-B	I169290		B-109	ISI	-	-	-	-	-	-	-
C2.31	ORPRHE-1B		OUTLET REINFORCING PLATE WELD	AUG	-	-	-	-	-	-	-
2	RHR			OWN	-	-	-	-	-	-	-
				PRE	-	-	-	-	-	-	-
C-B	I169043	ISI/UT/UT-303	B-109	ISI	r	r	r	t	t	t	t
C2.32	INSRHE-1A	ISI/UT/UT-203	INLET NOZZLE-TO-SHELL WELD	AUG	-	-	-	-	-	-	-
2	RHR			OWN	-	-	-	-	-	-	-
				PRE	-	-	-	-	-	-	-
C-B	I169053	ISI/UT/UT-303	B-109	ISI	r	r	r	t	t	t	t
C2.32	ONSRHE-1A	ISI/UT/UT-203	OUTLET NOZZLE-TO-SHELL WELD	AUG	-	-	-	-	-	-	-
2	RHR			OWN	-	-	-	-	-	-	-
				PRE	-	-	-	-	-	-	-

Category, ItemNO, Class	Summary / CompID / System	Scope / Method / Procedure	Iso No. Comp. Desc. Code Case		Period 1 00	Period 1 02	Period 2 03	Period 2 05	Period 2 06	Period 3 08	Period 3 09
C-B	I169243	ISI/UT/UT-303	B-109	ISI	-	c	r	t	t	t	t
C2.32	INSRHE-1B	ISI/UT/UT-203	INLET NOZZLE-TO-SHELL WELD	AUG	-	-	-	-	-	-	-
2	RHR			OWN	-	-	-	-	-	-	-
				PRE	-	-	-	-	-	-	-
C-B	I169253	ISI/UT/UT-303	B-109	ISI	-	c	r	t	t	t	t
C2.32	ONSRHE-1B	ISI/UT/UT-203	OUTLET NOZZLE-TO-SHELL WELD	AUG	-	-	-	-	-	-	-
2	RHR			OWN	-	-	-	-	-	-	-
				PRE	-	-	-	-	-	-	-
C-B	I169040	ISI/VT/VT-109	B-109	ISI	-	c	-	-	-	-	-
C2.33	INSRHE-1A		INLET NOZZLE-TO-SHELL WELD	AUG	-	-	-	-	-	-	-
2	RHR			OWN	-	-	-	-	-	-	-
				PRE	-	-	-	-	-	-	-
C-B	I169041	ISI/VT/VT-109	B-109	ISI	-	-	-	s	-	-	-
C2.33	INSRHE-1A		INLET NOZZLE-TO-SHELL WELD	AUG	-	-	-	-	-	-	-
2	RHR			OWN	-	-	-	-	-	-	-
				PRE	-	-	-	-	-	-	-
C-B	I169042	ISI/VT/VT-109	B-109	ISI	-	-	-	-	-	s	-
C2.33	INSRHE-1A		INLET NOZZLE-TO-SHELL WELD	AUG	-	-	-	-	-	-	-
2	RHR			OWN	-	-	-	-	-	-	-
				PRE	-	-	-	-	-	-	-
C-B	I169050	ISI/VT/VT-109	B-109	ISI	-	c	-	-	-	-	-
C2.33	ONSRHE-1A		OUTLET NOZZLE-TO-SHELL WELD	AUG	-	-	-	-	-	-	-
2	RHR			OWN	-	-	-	-	-	-	-
				PRE	-	-	-	-	-	-	-
C-B	I169051	ISI/VT/VT-109	B-109	ISI	-	-	-	s	-	-	-
C2.33	ONSRHE-1A		OUTLET NOZZLE-TO-SHELL WELD	AUG	-	-	-	-	-	-	-
2	RHR			OWN	-	-	-	-	-	-	-
				PRE	-	-	-	-	-	-	-
C-B	I169052	ISI/VT/VT-109	B-109	ISI	-	-	-	-	-	s	-
C2.33	ONSRHE-1A		OUTLET NOZZLE-TO-SHELL WELD	AUG	-	-	-	-	-	-	-
2	RHR			OWN	-	-	-	-	-	-	-
				PRE	-	-	-	-	-	-	-
C-B	I169240		B-109	ISI	-	-	-	-	-	-	-
C2.33	INSRHE-1B		INLET NOZZLE-TO-SHELL WELD	AUG	-	-	-	-	-	-	-
2	RHR			OWN	-	-	-	-	-	-	-
				PRE	-	-	-	-	-	-	-
C-B	I169241		B-109	ISI	-	-	-	-	-	-	-
C2.33	INSRHE-1B		INLET NOZZLE-TO-SHELL WELD	AUG	-	-	-	-	-	-	-
2	RHR			OWN	-	-	-	-	-	-	-
				PRE	-	-	-	-	-	-	-

Category, ItemNO, Class	Summary / CompID / System	Scope / Method / Procedure	Iso No. Comp. Desc. Code Case		Period 1 00	Period 1 02	Period 2 03	Period 2 05	Period 2 06	Period 3 08	Period 3 09
C-B	I169242		B-109	ISI	-	-	-	-	-	-	-
C2.33	INSRHE-1B		INLET NOZZLE-TO-SHELL WELD	AUG	-	-	-	-	-	-	-
2	RHR			OWN	-	-	-	-	-	-	-
				PRE	-	-	-	-	-	-	-
C-B	I169250		B-109	ISI	-	-	-	-	-	-	-
C2.33	ONSRHE-1B		OUTLET NOZZLE-TO-SHELL WELD	AUG	-	-	-	-	-	-	-
2	RHR			OWN	-	-	-	-	-	-	-
				PRE	-	-	-	-	-	-	-
C-B	I169251		B-109	ISI	-	-	-	-	-	-	-
C2.33	ONSRHE-1B		OUTLET NOZZLE-TO-SHELL WELD	AUG	-	-	-	-	-	-	-
2	RHR			OWN	-	-	-	-	-	-	-
				PRE	-	-	-	-	-	-	-
C-B	I169252		B-109	ISI	-	-	-	-	-	-	-
C2.33	ONSRHE-1B		OUTLET NOZZLE-TO-SHELL WELD	AUG	-	-	-	-	-	-	-
2	RHR			OWN	-	-	-	-	-	-	-
				PRE	-	-	-	-	-	-	-
C-C	I071360	ISI/PT/PT-106	B-1	ISI	-	-	-	-	-	-	s
C3.10	AB1R, Weld 185 @ Snubber 7 & 8		EARTHQUAKE BRACKET - IA	AUG	-	-	-	-	-	-	-
2	SG			OWN	-	-	-	-	-	-	-
				PRE	-	-	-	-	-	-	-
C-C	I071362		B-1	ISI	-	-	-	-	-	-	-
C3.10	AB2R, Weld 186 @ Snubber 1 & 2		EARTHQUAKE BRACKET - IA	AUG	-	-	-	-	-	-	-
2	SG			OWN	-	-	-	-	-	-	-
				PRE	-	-	-	-	-	-	-
C-C	I071364		B-1	ISI	-	-	-	-	-	-	-
C3.10	AB3R, Weld 184 @ Snubber 5 & 6		EARTHQUAKE BRACKET - IA	AUG	-	-	-	-	-	-	-
2	SG			OWN	-	-	-	-	-	-	-
				PRE	-	-	-	-	-	-	-
C-C	I071366		B-1	ISI	-	-	-	-	-	-	-
C3.10	AB4R, Weld 183 @ Snubber 3 & 4		EARTHQUAKE BRACKET - IA	AUG	-	-	-	-	-	-	-
2	SG			OWN	-	-	-	-	-	-	-
				PRE	-	-	-	-	-	-	-
C-C	I072080		B-1	ISI	-	-	-	-	-	-	-
C3.10	BB1R		EARTHQUAKE BRACKET - IA	AUG	-	-	-	-	-	-	-
2	SG			OWN	-	-	-	-	-	-	-
				PRE	-	-	-	-	-	-	-
C-C	I072082		B-1	ISI	-	-	-	-	-	-	-
C3.10	BB2R		EARTHQUAKE BRACKET - IA	AUG	-	-	-	-	-	-	-
2	SG			OWN	-	-	-	-	-	-	-
				PRE	-	-	-	-	-	-	-

Category, ItemNO, Class	Summary / CompID / System	Scope / Method / Procedure	Iso No. Comp. Desc. Code Case		Period 1 00	Period 1 02	Period 2 03	Period 2 05	Period 2 06	Period 3 08	Period 3 09
C-C	I072084		B-1	ISI	-	-	-	-	-	-	-
C3.10	BB3R		EARTHQUAKE BRACKET - IA	AUG	-	-	-	-	-	-	-
2	SG			OWN	-	-	-	-	-	-	-
				PRE	-	-	-	-	-	-	-
C-C	I072086		B-1	ISI	-	-	-	-	-	-	-
C3.10	BB4R		EARTHQUAKE BRACKET - IA	AUG	-	-	-	-	-	-	-
2	SG			OWN	-	-	-	-	-	-	-
				PRE	-	-	-	-	-	-	-
C-C	I169130		B-109	ISI	-	-	-	-	-	-	-
C3.10	1A-1 (IA)		SUPPORT LEG #1 TO VESSEL WELD	AUG	-	-	-	-	-	-	-
2	RHR			OWN	-	-	-	-	-	-	-
				PRE	-	-	-	-	-	-	-
C-C	I169140		B-109	ISI	-	-	-	-	-	-	-
C3.10	1A-2 (IA)		SUPPORT LEG #2 TO VESSEL WELD	AUG	-	-	-	-	-	-	-
2	RHR			OWN	-	-	-	-	-	-	-
				PRE	-	-	-	-	-	-	-
C-C	I169150		B-109	ISI	-	-	-	-	-	-	-
C3.10	1A-3 (IA)		SUPPORT LEG #3 TO VESSEL WELD	AUG	-	-	-	-	-	-	-
2	RHR			OWN	-	-	-	-	-	-	-
				PRE	-	-	-	-	-	-	-
C-C	I169330		B-109	ISI	-	-	-	-	-	-	-
C3.10	1B-1 (IA)		SUPPORT LEG #1 TO VESSEL WELD	AUG	-	-	-	-	-	-	-
2	RHR			OWN	-	-	-	-	-	-	-
				PRE	-	-	-	-	-	-	-
C-C	I169340	ISI/PT/PT-106	B-109	ISI	-	-	c	-	-	-	-
C3.10	1B-2 (IA)	ISI/PT/PT-106	SUPPORT LEG #2 TO VESSEL WELD	AUG	-	-	-	-	-	-	-
2	RHR			OWN	-	-	-	-	-	-	-
				PRE	-	-	-	-	-	-	-
C-C	I169350		B-109	ISI	-	-	-	-	-	-	-
C3.10	1B-3 (IA)		SUPPORT LEG #3 TO VESSEL WELD	AUG	-	-	-	-	-	-	-
2	RHR			OWN	-	-	-	-	-	-	-
				PRE	-	-	-	-	-	-	-
C-C	I075500		B-6	ISI	-	-	-	-	-	-	-
C3.20	CF-S1 (IA)		INTEGRAL ATTACHMENT	AUG	-	-	-	-	-	-	-
2	CVCS-CHRG			OWN	-	-	-	-	-	-	-
				PRE	-	-	-	-	-	-	-
C-C	I075600		B-6	ISI	-	-	-	-	-	-	-
C3.20	CF-S2 (IA)		INTEGRAL ATTACHMENT	AUG	-	-	-	-	-	-	-
2	CVCS-CHRG			OWN	-	-	-	-	-	-	-
				PRE	-	-	-	-	-	-	-

Category, ItemNO, Class	Summary / CompID / System	Scope / Method / Procedure	Iso No. Comp. Desc. Code Case		Period 1 00	Period 1 02	Period 2 03	Period 2 05	Period 2 06	Period 3 08	Period 3 09
C-C	I077401		B-6	ISI	-	-	-	-	-	-	-
C3.20	CVU-410 (IA)		INTEGRAL ATTACHMENT	AUG	-	-	-	-	-	-	-
2	CVCS-CHRG			OWN	-	-	-	-	-	-	-
				PRE	-	-	-	-	-	-	-
C-C	I077501		B-6	ISI	-	-	-	-	-	-	-
C3.20	CVU-411 (IA)		INTEGRAL ATTACHMENT	AUG	-	-	-	-	-	-	-
2	CVCS-CHRG			OWN	-	-	-	-	-	-	-
				PRE	-	-	-	-	-	-	-
C-C	I077601		B-6	ISI	-	-	-	-	-	-	-
C3.20	CVU-412 (IA)		INTEGRAL ATTACHMENT	AUG	-	-	-	-	-	-	-
2	CVCS-CHRG			OWN	-	-	-	-	-	-	-
				PRE	-	-	-	-	-	-	-
C-C	I077701	ISI/PT/PT-106	B-6	ISI	c	-	-	-	-	-	-
C3.20	CVU-413 (IA)		INTEGRAL ATTACHMENT	AUG	-	-	-	-	-	-	-
2	CVCS-CHRG			OWN	-	-	-	-	-	-	-
				PRE	-	-	-	-	-	-	-
C-C	I077801		B-6	ISI	-	-	-	-	-	-	-
C3.20	CVU-414 (IA)		INTEGRAL ATTACHMENT	AUG	-	-	-	-	-	-	-
2	CVCS-CHRG			OWN	-	-	-	-	-	-	-
				PRE	-	-	-	-	-	-	-
C-C	I077901		B-6	ISI	-	-	-	-	-	-	-
C3.20	CVU-415 (IA)		INTEGRAL ATTACHMENT	AUG	-	-	-	-	-	-	-
2	CVCS-CHRG			OWN	-	-	-	-	-	-	-
				PRE	-	-	-	-	-	-	-
C-C	I079750		B-8	ISI	-	-	-	-	-	-	-
C3.20	MSU-3 (IA)		INTEGRAL ATTACHMENT	AUG	-	-	-	-	-	-	-
2	MS			OWN	-	-	-	-	-	-	-
				PRE	-	-	-	-	-	-	-
C-C	I080401	OWN/MT/MT-105	B-9	ISI	-	-	-	-	-	-	-
C3.20	PS-A, PEN 401 ANCHOR (OUTCV)		INTEGRAL ATTACHMENT	AUG	-	-	-	-	-	-	-
2	MS			OWN	c	-	-	-	-	-	-
				PRE	-	-	-	-	-	-	-
C-C	I080451	OWN/MT/MT-105	B-9	ISI	-	-	-	-	-	-	-
C3.20	PS-B, PEN 401 ANCHOR (INCV)		INTEGRAL ATTACHMENT	AUG	-	-	-	-	-	-	-
2	MS			OWN	c	-	-	-	-	-	-
				PRE	-	-	-	-	-	-	-
C-C	I081310		B-9	ISI	-	-	-	-	-	-	-
C3.20	MSU-44 (IA)		INTEGRAL ATTACHMENT	AUG	-	-	-	-	-	-	-
2	MS			OWN	-	-	-	-	-	-	-
				PRE	-	-	-	-	-	-	-

Category, ItemNO, Class	Summary / CompID / System	Scope / Method / Procedure	Iso No. Comp. Desc. Code Case		Period 1 00	Period 1 02	Period 2 03	Period 2 05	Period 2 06	Period 3 08	Period 3 09
C-C	I082005	ISI/MT/MT-105	B-9	ISI	-	H	-	-	-	s	-
C3.20	MSU-41 (IA)		INTEGRAL ATTACHMENT	AUG	-	-	-	-	-	-	-
2	MS			OWN	-	-	-	-	-	-	-
				PRE	-	-	-	-	-	-	-
C-C	I082030		B-9	ISI	-	-	-	-	-	-	-
C3.20	MSU-40 (IA)		INTEGRAL ATTACHMENT	AUG	-	-	-	-	-	-	-
2	MS			OWN	-	-	-	-	-	-	-
				PRE	-	-	-	-	-	-	-
C-C	I082055		B-9	ISI	-	-	-	-	-	-	-
C3.20	MSU-39 (IA)		INTEGRAL ATTACHMENT	AUG	-	-	-	-	-	-	-
2	MS			OWN	-	-	-	-	-	-	-
				PRE	-	-	-	-	-	-	-
C-C	I082530		B-9A	ISI	-	-	-	-	-	-	-
C3.20	MSU-37 (IA)		INTEGRAL ATTACHMENT	AUG	-	-	-	-	-	-	-
2	MS			OWN	-	-	-	-	-	-	-
				PRE	-	-	-	-	-	-	-
C-C	I083405	ISI/MT/MT-105	B-9A	ISI	-	-	-	-	-	s	-
C3.20	MSU-36 (IA)		INTEGRAL ATTACHMENT	AUG	-	-	-	-	-	-	-
2	MS			OWN	-	-	-	-	-	-	-
				PRE	-	-	-	-	-	-	-
C-C	I085901	OWN/MT/MT-105	B-10A	ISI	-	-	-	-	-	-	-
C3.20	PS-A, PEN 402 ANCHOR (INCV)	OWN/PT/PT-106	INTEGRAL ATTACHMENT	AUG	-	-	-	-	-	-	-
2	MS			OWN	c	-	-	-	-	-	-
				PRE	-	-	-	-	-	-	-
C-C	I085951	OWN/MT/MT-105	B-10A	ISI	-	-	-	-	-	-	-
C3.20	PS-B, PEN 402 ANCHOR (OUTCV)		INTEGRAL ATTACHMENT	AUG	-	-	-	-	-	-	-
2	MS			OWN	c	-	-	-	-	-	-
				PRE	-	-	-	-	-	-	-
C-C	I086330	OWN/MT/MT-105	B-10A	ISI	-	-	-	-	-	-	-
C3.20	MSU-12 (IA)		INTEGRAL ATTACHMENT	AUG	-	-	-	-	-	-	-
2	MS			OWN	c	-	-	-	-	-	-
				PRE	-	-	-	-	-	-	-
C-C	I086530	OWN/MT/MT-105	B-10A	ISI	-	-	-	-	-	-	-
C3.20	MSU-13 (IA)		INTEGRAL ATTACHMENT	AUG	-	-	-	-	-	-	-
2	MS			OWN	c	-	-	-	-	-	-
				PRE	-	-	-	-	-	-	-
C-C	I086805	ISI/MT/MT-105	B-10A	ISI	-	c	-	-	-	-	-
C3.20	MSU-15 (IA)		INTEGRAL ATTACHMENT	AUG	-	-	-	-	-	-	-
2	MS			OWN	-	-	-	-	-	-	-
				PRE	-	-	-	-	-	-	-

Category, ItemNO, Class	Summary / CompID / System	Scope / Method / Procedure	Iso No. Comp. Desc. Code Case		Period 1 00	Period 1 02	Period 2 03	Period 2 05	Period 2 06	Period 3 08	Period 3 09
C-C	I086830		B-10A	ISI	-	-	-	-	-	-	-
C3.20	MSU-16 (IA)		INTEGRAL ATTACHMENT	AUG	-	-	-	-	-	-	-
2	MS			OWN	-	-	-	-	-	-	-
				PRE	-	-	-	-	-	-	-
C-C	I087105	OWN/MT/MT-105	B-10A	ISI	-	-	-	-	-	-	-
C3.20	MSU-18 (IA)		INTEGRAL ATTACHMENT	AUG	-	-	-	-	-	-	-
2	MS			OWN	c	-	-	-	-	-	-
				PRE	-	-	-	-	-	-	-
C-C	I087130	OWN/MT/MT-105	B-10A	ISI	-	-	-	-	-	-	-
C3.20	MSU-19 (IA)		INTEGRAL ATTACHMENT	AUG	-	-	-	-	-	-	-
2	MS			OWN	c	-	-	-	-	-	-
				PRE	-	-	-	-	-	-	-
C-C	I087430	OWN/MT/MT-105	B-10A	ISI	-	-	-	-	-	-	-
C3.20	MSU-22 (IA)		INTEGRAL ATTACHMENT	AUG	-	-	-	-	-	-	-
2	MS			OWN	E	-	-	-	-	-	-
				PRE	-	-	-	-	-	-	-
C-C	I087630	OWN/MT/MT-105	B-10A	ISI	-	-	-	-	-	-	-
C3.20	MSU-25 (IA)		INTEGRAL ATTACHMENT	AUG	-	-	-	-	-	-	-
2	MS			OWN	E	-	-	-	-	-	-
				PRE	-	-	-	-	-	-	-
C-C	I087655	OWN/MT/MT-105	B-10A	ISI	-	-	-	-	-	-	-
C3.20	MSU-26 (IA)	OWN/PT/PT-106	INTEGRAL ATTACHMENT	AUG	-	-	-	-	-	-	-
2	MS			OWN	E	-	-	-	-	-	-
				PRE	-	-	-	-	-	-	-
C-C	I088005	OWN/MT/MT-105	B-10A	ISI	-	-	-	-	-	-	-
C3.20	MSU-27 (IA)		INTEGRAL ATTACHMENT	AUG	-	-	-	-	-	-	-
2	MS			OWN	E	-	-	-	-	-	-
				PRE	-	-	-	-	-	-	-
C-C	I088130	OWN/MT/MT-105	B-10A	ISI	-	-	-	-	-	-	-
C3.20	MSU-29 (IA)		INTEGRAL ATTACHMENT	AUG	-	-	-	-	-	-	-
2	MS			OWN	E	-	-	-	-	-	-
				PRE	-	-	-	-	-	-	-
C-C	I088305	OWN/MT/MT-105	B-10A	ISI	-	-	-	-	-	-	-
C3.20	MSU-31 (IA)		INTEGRAL ATTACHMENT	AUG	-	-	-	-	-	-	-
2	MS			OWN	E	-	-	-	-	-	-
				PRE	-	-	-	-	-	-	-
C-C	I088821		B-10	ISI	-	-	-	-	-	-	-
C3.20	MSU-32 (IA)		INTEGRAL ATTACHMENT	AUG	-	-	-	-	-	-	-
2	MS			OWN	-	-	-	-	-	-	-
				PRE	-	-	-	-	-	-	-

Category, ItemNO, Class	Summary / CompID / System	Scope / Method / Procedure	Iso No. Comp. Desc. Code Case		Period 1 00	Period 1 02	Period 2 03	Period 2 05	Period 2 06	Period 3 08	Period 3 09
C-C	I088835	OWN/MT/MT-105	B-10	ISI	-	-	-	-	-	-	-
C3.20	MSU-33 (IA)		INTEGRAL ATTACHMENT	AUG	-	-	-	-	-	-	-
2	MS			OWN	E	-	-	-	-	-	-
				PRE	-	-	-	-	-	-	-
C-C	I089805	OWN/MT/MT-105	B-10	ISI	-	-	-	-	-	-	-
C3.20	MSU-34 (IA)		INTEGRAL ATTACHMENT	AUG	-	-	-	-	-	-	-
2	MS			OWN	E	-	-	-	-	-	-
				PRE	-	-	-	-	-	-	-
C-C	I091226		B-11	ISI	-	-	-	-	-	-	-
C3.20	FWU-15 (IA)		INTEGRAL ATTACHMENT	AUG	-	-	-	-	-	-	-
2	FW			OWN	-	-	-	-	-	-	-
				PRE	-	-	-	-	-	-	-
C-C	I091901	OWN/MT/MT-105	B-11	ISI	-	-	-	-	-	-	-
C3.20	PS-A, PEN 403 ANCHOR (OUTCV)		INTEGRAL ATTACHMENT	AUG	-	-	-	-	-	-	-
2	FW			OWN	c	-	-	-	-	-	-
				PRE	-	-	-	-	-	-	-
C-C	I091951	ISI/MT/MT-105	B-12	ISI	c	-	-	-	-	-	-
C3.20	PS-B, PEN 403 ANCHOR (INCV)		INTEGRAL ATTACHMENT	AUG	-	-	-	-	-	-	-
2	FW			OWN	-	-	-	-	-	-	-
				PRE	-	-	-	-	-	-	-
C-C	I092455		B-12	ISI	-	-	-	-	-	-	-
C3.20	FWU-5 (IA)		INTEGRAL ATTACHMENT	AUG	-	-	-	-	-	-	-
2	FW			OWN	-	-	-	-	-	-	-
				PRE	-	-	-	-	-	-	-
C-C	I093505		B-12	ISI	-	-	-	-	-	-	-
C3.20	FWU-1 (IA)		INTEGRAL ATTACHMENT	AUG	-	-	-	-	-	-	-
2	FW			OWN	-	-	-	-	-	-	-
				PRE	-	-	-	-	-	-	-
C-C	I094827		B-14	ISI	-	-	-	-	-	-	-
C3.20	FWU-42 (IA)		INTEGRAL ATTACHMENT	AUG	-	-	-	-	-	-	-
2	FW			OWN	-	-	-	-	-	-	-
				PRE	-	-	-	-	-	-	-
C-C	I096305		B-14	ISI	-	-	-	-	-	-	-
C3.20	FWU-51 (IA)		INTEGRAL ATTACHMENT	AUG	-	-	-	-	-	-	-
2	FW			OWN	-	-	-	-	-	-	-
				PRE	-	-	-	-	-	-	-
C-C	I097401	OWN/MT/MT-105	B-14	ISI	-	-	-	-	-	-	-
C3.20	PS-A, PEN 404 ANCHOR (OUTCV)		INTEGRAL ATTACHMENT	AUG	-	-	-	-	-	-	-
2	FW			OWN	c	-	-	-	-	-	-
				PRE	-	-	-	-	-	-	-

Category, ItemNO, Class	Summary / CompID / System	Scope / Method / Procedure	Iso No. Comp. Desc. Code Case		Period 1 00	Period 1 02	Period 2 03	Period 2 05	Period 2 06	Period 3 08	Period 3 09
C-C	I097451	OWN/MT/MT-105	B-13	ISI	-	-	-	-	-	-	-
C3.20	PS-B, PEN 404 ANCHOR (INCV)		INTEGRAL ATTACHMENT	AUG	-	-	-	-	-	-	-
2	FW			OWN	c	-	-	-	-	-	-
				PRE	-	-	-	-	-	-	-
C-C	I097701	ISI/MT/MT-105	B-13	ISI	-	-	-	-	-	-	s
C3.20	FWU-13 (IA)		INTEGRAL ATTACHMENT	AUG	-	-	-	-	-	-	-
2	FW			OWN	-	-	-	-	-	-	-
				PRE	-	-	-	-	-	-	-
C-C	I099005		B-13	ISI	-	-	-	-	-	-	-
C3.20	FWU-7 (IA)		INTEGRAL ATTACHMENT	AUG	-	-	-	-	-	-	-
2	FW			OWN	-	-	-	-	-	-	-
				PRE	-	-	-	-	-	-	-
C-C	I104210		B-16	ISI	-	-	-	-	-	-	-
C3.20	SIU-104 (IA)		INTEGRAL ATTACHMENT	AUG	-	-	-	-	-	-	-
2	HPSI			OWN	-	-	-	-	-	-	-
				PRE	-	-	-	-	-	-	-
C-C	I106055		B-16	ISI	-	-	-	-	-	-	-
C3.20	SIU-103 (IA)		INTEGRAL ATTACHMENT	AUG	-	-	-	-	-	-	-
2	HPSI			OWN	-	-	-	-	-	-	-
				PRE	-	-	-	-	-	-	-
C-C	I107221		B-16A	ISI	-	-	-	-	-	-	-
C3.20	SIU-100 (IA)		INTEGRAL ATTACHMENT	AUG	-	-	-	-	-	-	-
2	HPSI			OWN	-	-	-	-	-	-	-
				PRE	-	-	-	-	-	-	-
C-C	I108451		B-17	ISI	-	-	-	-	-	-	-
C3.20	PEN 111 ANCHOR (IA)		INTEGRAL ATTACHMENT	AUG	-	-	-	-	-	-	-
2	RHR			OWN	-	-	-	-	-	-	-
				PRE	-	-	-	-	-	-	-
C-C	I110655	ISI/PT/PT-106	B-17	ISI	-	-	-	s	-	-	-
C3.20	RHU-9 (IA)		INTEGRAL ATTACHMENT	AUG	-	-	-	-	-	-	-
2	RHR			OWN	-	-	-	-	-	-	-
				PRE	-	-	-	-	-	-	-
C-C	I111230	ISI/PT/PT-106	B-18	ISI	-	-	-	-	-	s	-
C3.20	RHU-14 (IA)		INTEGRAL ATTACHMENT	AUG	-	-	-	-	-	-	-
2	RHR			OWN	-	-	-	-	-	-	-
				PRE	-	-	-	-	-	-	-
C-C	I112210		B-18	ISI	-	-	-	-	-	-	-
C3.20	RHU-18 (IA)		INTEGRAL ATTACHMENT	AUG	-	-	-	-	-	-	-
2	RHR			OWN	-	-	-	-	-	-	-
				PRE	-	-	-	-	-	-	-

Category, ItemNO, Class	Summary / CompID / System	Scope / Method / Procedure	Iso No. Comp. Desc. Code Case		Period 1 00	Period 1 02	Period 2 03	Period 2 05	Period 2 06	Period 3 08	Period 3 09
C-C	I112905		B-18	ISI	-	-	-	-	-	-	-
C3.20	RHU-21 (IA)		INTEGRAL ATTACHMENT	AUG	-	-	-	-	-	-	-
2	RHR			OWN	-	-	-	-	-	-	-
				PRE	-	-	-	-	-	-	-
C-C	I120301	ISI/PT/PT-106	B-19	ISI	-	-	c	-	-	-	-
C3.20	RHU-100 (IA)		INTEGRAL ATTACHMENT	AUG	-	-	-	-	-	-	-
2	HPSI			OWN	-	-	-	-	-	-	-
				PRE	-	-	-	-	-	-	-
C-C	I121011		B-19	ISI	-	-	-	-	-	-	-
C3.20	RHU-108 (IA)		INTEGRAL ATTACHMENT	AUG	-	-	-	-	-	-	-
2	HPSI			OWN	-	-	-	-	-	-	-
				PRE	-	-	-	-	-	-	-
C-C	I122001		B-19	ISI	-	-	-	-	-	-	-
C3.20	RHU-111 (IA)		INTEGRAL ATTACHMENT	AUG	-	-	-	-	-	-	-
2	HPSI			OWN	-	-	-	-	-	-	-
				PRE	-	-	-	-	-	-	-
C-C	I122602		B-19	ISI	-	-	-	-	-	-	-
C3.20	RHU-112 (IA)		INTEGRAL ATTACHMENT	AUG	-	-	-	-	-	-	-
2	HPSI			OWN	-	-	-	-	-	-	-
				PRE	-	-	-	-	-	-	-
C-C	I124202		B-19	ISI	-	-	-	-	-	-	-
C3.20	RHU-102 (IA)		INTEGRAL ATTACHMENT	AUG	-	-	-	-	-	-	-
2	HPSI			OWN	-	-	-	-	-	-	-
				PRE	-	-	-	-	-	-	-
C-C	I125305		B-19	ISI	-	-	-	-	-	-	-
C3.20	RHU-124 (IA)		INTEGRAL ATTACHMENT	AUG	-	-	-	-	-	-	-
2	HPSI			OWN	-	-	-	-	-	-	-
				PRE	-	-	-	-	-	-	-
C-C	I125805		B-19	ISI	-	-	-	-	-	-	-
C3.20	RHU-125 (IA)		INTEGRAL ATTACHMENT	AUG	-	-	-	-	-	-	-
2	HPSI			OWN	-	-	-	-	-	-	-
				PRE	-	-	-	-	-	-	-
C-C	I130730		B-20	ISI	-	-	-	-	-	-	-
C3.20	RHU-77 (IA)		INTEGRAL ATTACHMENT	AUG	-	-	-	-	-	-	-
2	RHR			OWN	-	-	-	-	-	-	-
				PRE	-	-	-	-	-	-	-
C-C	I131210		B-20	ISI	-	-	-	-	-	-	-
C3.20	RHU-76 (IA)		INTEGRAL ATTACHMENT	AUG	-	-	-	-	-	-	-
2	RHR			OWN	-	-	-	-	-	-	-
				PRE	-	-	-	-	-	-	-

Category, ItemNO, Class	Summary / CompID / System	Scope / Method / Procedure	Iso No. Comp. Desc. Code Case		Period 1 00	Period 1 02	Period 2 03	Period 2 05	Period 2 06	Period 3 08	Period 3 09
C-C	I132905		B-20	ISI	-	-	-	-	-	-	-
C3.20	RHU-62 (IA)		INTEGRAL ATTACHMENT	AUG	-	-	-	-	-	-	-
2	RHR			OWN	-	-	-	-	-	-	-
				PRE	-	-	-	-	-	-	-
C-C	I133910		B-22	ISI	-	-	-	-	-	-	-
C3.20	RHU-28 (IA)		INTEGRAL ATTACHMENT	AUG	-	-	-	-	-	-	-
2	RHR			OWN	-	-	-	-	-	-	-
				PRE	-	-	-	-	-	-	-
C-C	I135351		B-20A	ISI	-	-	-	-	-	-	-
C3.20	PEN 140 ANCHOR (IA)(IN/OUT)		INTEGRAL ATTACHMENT	AUG	-	-	-	-	-	-	-
2	RHR			OWN	-	-	-	-	-	-	-
				PRE	-	-	-	-	-	-	-
C-C	I137805		B-20A	ISI	-	-	-	-	-	-	-
C3.20	RHU-68 (IA)		INTEGRAL ATTACHMENT	AUG	-	-	-	-	-	-	-
2	RHR			OWN	-	-	-	-	-	-	-
				PRE	-	-	-	-	-	-	-
C-C	I139860		B-23	ISI	-	-	-	-	-	-	-
C3.20	RHU-37 (IA)		INTEGRAL ATTACHMENT	AUG	-	-	-	-	-	-	-
2	RHR			OWN	-	-	-	-	-	-	-
				PRE	-	-	-	-	-	-	-
C-C	I140930		B-24	ISI	-	-	-	-	-	-	-
C3.20	RHU-40 (IA)		INTEGRAL ATTACHMENT	AUG	-	-	-	-	-	-	-
2	RHR			OWN	-	-	-	-	-	-	-
				PRE	-	-	-	-	-	-	-
C-C	I140960		B-24	ISI	-	-	-	-	-	-	-
C3.20	RHU-46 (IA)		INTEGRAL ATTACHMENT	AUG	-	-	-	-	-	-	-
2	RHR			OWN	-	-	-	-	-	-	-
				PRE	-	-	-	-	-	-	-
C-C	I145890		B-25	ISI	-	-	-	-	-	-	-
C3.20	RHU-55 (IA)		INTEGRAL ATTACHMENT	AUG	-	-	-	-	-	-	-
2	RHR			OWN	-	-	-	-	-	-	-
				PRE	-	-	-	-	-	-	-
C-C	I146620		B-26	ISI	-	-	-	-	-	-	-
C3.20	RHU-60 (IA)		INTEGRAL ATTACHMENT	AUG	-	-	-	-	-	-	-
2	RHR			OWN	-	-	-	-	-	-	-
				PRE	-	-	-	-	-	-	-
C-C	I147910		B-26	ISI	-	-	-	-	-	-	-
C3.20	RHU-95 (IA)		INTEGRAL ATTACHMENT	AUG	-	-	-	-	-	-	-
2	RHR			OWN	-	-	-	-	-	-	-
				PRE	-	-	-	-	-	-	-

Category, ItemNO, Class	Summary / CompID / System	Scope / Method / Procedure	Iso No. Comp. Desc. Code Case		Period 1 00	Period 1 02	Period 2 03	Period 2 05	Period 2 06	Period 3 08	Period 3 09
C-C	I149620		B-26	ISI	-	-	-	-	-	-	-
C3.20	RHU-99 (IA)		INTEGRAL ATTACHMENT	AUG	-	-	-	-	-	-	-
2	RHR			OWN	-	-	-	-	-	-	-
				PRE	-	-	-	-	-	-	-
C-C	I150620		B-25	ISI	-	-	-	-	-	-	-
C3.20	RHU-48 (IA)		INTEGRAL ATTACHMENT	AUG	-	-	-	-	-	-	-
2	RHR			OWN	-	-	-	-	-	-	-
				PRE	-	-	-	-	-	-	-
C-C	I151120		B-25	ISI	-	-	-	-	-	-	-
C3.20	RHU-49 (IA)		INTEGRAL ATTACHMENT	AUG	-	-	-	-	-	-	-
2	RHR			OWN	-	-	-	-	-	-	-
				PRE	-	-	-	-	-	-	-
C-C	I153220	ISI/PT/PT-106	B-25	ISI	-	-	c	-	-	-	-
C3.20	RHU-54 (IA)		INTEGRAL ATTACHMENT	AUG	-	-	-	-	-	-	-
2	RHR			OWN	-	-	-	-	-	-	-
				PRE	-	-	-	-	-	-	-
C-C	I154255		B-27	ISI	-	-	-	-	-	-	-
C3.20	RHU-58 (IA)		INTEGRAL ATTACHMENT	AUG	-	-	-	-	-	-	-
2	RHR			OWN	-	-	-	-	-	-	-
				PRE	-	-	-	-	-	-	-
C-C	I155210		B-27	ISI	-	-	-	-	-	-	-
C3.20	RHU-107 (IA)		INTEGRAL ATTACHMENT	AUG	-	-	-	-	-	-	-
2	RHR			OWN	-	-	-	-	-	-	-
				PRE	-	-	-	-	-	-	-
C-C	I156920		B-27	ISI	-	-	-	-	-	-	-
C3.20	RHU-103 (IA)		INTEGRAL ATTACHMENT	AUG	-	-	-	-	-	-	-
2	RHR			OWN	-	-	-	-	-	-	-
				PRE	-	-	-	-	-	-	-
C-C	I159105	ISI/PT/PT-106	B-19	ISI	-	c	-	-	-	-	-
C3.20	RHU-101 (IA)		INTEGRAL ATTACHMENT	AUG	-	-	-	-	-	-	-
2	CS			OWN	-	-	-	-	-	-	-
				PRE	-	-	-	-	-	-	-
C-C	I159901		B-19	ISI	-	-	-	-	-	-	-
C3.20	RHU-129 (IA)		INTEGRAL ATTACHMENT	AUG	-	-	-	-	-	-	-
2	CS			OWN	-	-	-	-	-	-	-
				PRE	-	-	-	-	-	-	-
C-C	I160402		B-19	ISI	-	-	-	-	-	-	-
C3.20	RHU-130 (IA)		INTEGRAL ATTACHMENT	AUG	-	-	-	-	-	-	-
2	CS			OWN	-	-	-	-	-	-	-
				PRE	-	-	-	-	-	-	-

Category, ItemNO, Class	Summary / CompID / System	Scope / Method / Procedure	Iso No. Comp. Desc. Code Case		Period 1 00	Period 1 02	Period 2 03	Period 2 05	Period 2 06	Period 3 08	Period 3 09
C-C	I160551		B-16B	ISI	-	-	-	-	-	-	-
C3.20	RHU-126 (IA)		INTEGRAL ATTACHMENT	AUG	-	-	-	-	-	-	-
2	HPSI			OWN	-	-	-	-	-	-	-
				PRE	-	-	-	-	-	-	-
C-C	I160665		B-16B	ISI	-	-	-	-	-	-	-
C3.20	RHU-113 (IA)		INTEGRAL ATTACHMENT	AUG	-	-	-	-	-	-	-
2	HPSI			OWN	-	-	-	-	-	-	-
				PRE	-	-	-	-	-	-	-
C-C	I160851		B-16B	ISI	-	-	-	-	-	-	-
C3.20	RHU-120 (IA)		INTEGRAL ATTACHMENT	AUG	-	-	-	-	-	-	-
2	HPSI			OWN	-	-	-	-	-	-	-
				PRE	-	-	-	-	-	-	-
C-C	I161101		B-37	ISI	-	-	-	-	-	-	-
C3.20	SIU-84 (IA)		INTEGRAL ATTACHMENT	AUG	-	-	-	-	-	-	-
2	HPSI			OWN	-	-	-	-	-	-	-
				PRE	-	-	-	-	-	-	-
C-C	I161191		B-37	ISI	-	-	-	-	-	-	-
C3.20	SIU-79 (IA)		INTEGRAL ATTACHMENT	AUG	-	-	-	-	-	-	-
2	HPSI			OWN	-	-	-	-	-	-	-
				PRE	-	-	-	-	-	-	-
C-C	I161391		B-37	ISI	-	-	-	-	-	-	-
C3.20	SIU-72 (IA)		INTEGRAL ATTACHMENT	AUG	-	-	-	-	-	-	-
2	HPSI			OWN	-	-	-	-	-	-	-
				PRE	-	-	-	-	-	-	-
C-C	I161426		B-37	ISI	-	-	-	-	-	-	-
C3.20	PEN 113 ANCHOR (IA)		INTEGRAL ATTACHMENT	AUG	-	-	-	-	-	-	-
2	HPSI			OWN	-	-	-	-	-	-	-
				PRE	-	-	-	-	-	-	-
C-C	I161531		B-38	ISI	-	-	-	-	-	-	-
C3.20	SIU-39 (IA)		INTEGRAL ATTACHMENT	AUG	-	-	-	-	-	-	-
2	HPSI			OWN	-	-	-	-	-	-	-
				PRE	-	-	-	-	-	-	-
C-C	I161631		B-38	ISI	-	-	-	-	-	-	-
C3.20	SIU-38 (IA)		INTEGRAL ATTACHMENT	AUG	-	-	-	-	-	-	-
2	HPSI			OWN	-	-	-	-	-	-	-
				PRE	-	-	-	-	-	-	-
C-C	I162181		B-39	ISI	-	-	-	-	-	-	-
C3.20	SIU-30 (IA)		INTEGRAL ATTACHMENT	AUG	-	-	-	-	-	-	-
2	HPSI			OWN	-	-	-	-	-	-	-
				PRE	-	-	-	-	-	-	-

Category, ItemNO, Class	Summary / CompID / System	Scope / Method / Procedure	Iso No. Comp. Desc. Code Case		Period 1 00	Period 1 02	Period 2 03	Period 2 05	Period 2 06	Period 3 08	Period 3 09
C-C	I162541	ISI/PT/PT-106	B-40	ISI	-	-	-	-	-	-	s
C3.20	SIU-95 (IA)		INTEGRAL ATTACHMENT	AUG	-	-	-	-	-	-	-
2	HPSI			OWN	-	-	-	-	-	-	-
				PRE	-	-	-	-	-	-	-
C-C	I162641		B-40	ISI	-	-	-	-	-	-	-
C3.20	SIU-90 (IA)		INTEGRAL ATTACHMENT	AUG	-	-	-	-	-	-	-
2	HPSI			OWN	-	-	-	-	-	-	-
				PRE	-	-	-	-	-	-	-
C-C	I163021		B-41	ISI	-	-	-	-	-	-	-
C3.20	SIU-85 (IA)		INTEGRAL ATTACHMENT	AUG	-	-	-	-	-	-	-
2	HPSI			OWN	-	-	-	-	-	-	-
				PRE	-	-	-	-	-	-	-
C-C	I163291		B-41	ISI	-	-	-	-	-	-	-
C3.20	SIU-71 (IA)		INTEGRAL ATTACHMENT	AUG	-	-	-	-	-	-	-
2	HPSI			OWN	-	-	-	-	-	-	-
				PRE	-	-	-	-	-	-	-
C-C	I163591		B-42	ISI	-	-	-	-	-	-	-
C3.20	SIU-68 (IA)		INTEGRAL ATTACHMENT	AUG	-	-	-	-	-	-	-
2	HPSI			OWN	-	-	-	-	-	-	-
				PRE	-	-	-	-	-	-	-
C-C	I163721		B-42	ISI	-	-	-	-	-	-	-
C3.20	SIU-62 (IA)		INTEGRAL ATTACHMENT	AUG	-	-	-	-	-	-	-
2	HPSI			OWN	-	-	-	-	-	-	-
				PRE	-	-	-	-	-	-	-
C-C	I163901		B-42	ISI	-	-	-	-	-	-	-
C3.20	SIU-56 (IA)		INTEGRAL ATTACHMENT	AUG	-	-	-	-	-	-	-
2	HPSI			OWN	-	-	-	-	-	-	-
				PRE	-	-	-	-	-	-	-
C-C	I163936		B-42	ISI	-	-	-	-	-	-	-
C3.20	PEN 101 ANCHOR (IA)		INTEGRAL ATTACHMENT	AUG	-	-	-	-	-	-	-
2	HPSI			OWN	-	-	-	-	-	-	-
				PRE	-	-	-	-	-	-	-
C-C	I164672	ISI/PT/PT-106	B-44	ISI	-	-	c	-	-	-	-
C3.20	SIU-26 (IA)		INTEGRAL ATTACHMENT	AUG	-	-	-	-	-	-	-
2	HPSI			OWN	-	-	-	-	-	-	-
				PRE	-	-	-	-	-	-	-
C-C	I166842		B-46	ISI	-	-	-	-	-	-	-
C3.20	CSU-33 (IA)		INTEGRAL ATTACHMENT	AUG	-	-	-	-	-	-	-
2	CS			OWN	-	-	-	-	-	-	-
				PRE	-	-	-	-	-	-	-

Category, ItemNO, Class	Summary / CompID / System	Scope / Method / Procedure	Iso No. Comp. Desc. Code Case		Period 1 00	Period 1 02	Period 2 03	Period 2 05	Period 2 06	Period 3 08	Period 3 09
C-C	I168342		B-47	ISI	-	-	-	-	-	-	-
C3.20	CSU-57 (IA)		INTEGRAL ATTACHMENT	AUG	-	-	-	-	-	-	-
2	CS			OWN	-	-	-	-	-	-	-
				PRE	-	-	-	-	-	-	-
C-F-1	I074800		B-6	ISI	-	-	-	-	-	-	-
C5.11	CF-1		INLET CAP-TO-INLET SHELL WD	AUG	-	-	-	-	-	-	-
2	CVCS-CHRG			OWN	-	-	-	-	-	-	-
				PRE	-	-	-	-	-	-	-
C-F-1	I074900		B-6	ISI	-	-	-	-	-	-	-
C5.11	CF-2		INLET SHELL-TO-BAFFLE WELD	AUG	-	-	-	-	-	-	-
2	CVCS-CHRG			OWN	-	-	-	-	-	-	-
				PRE	-	-	-	-	-	-	-
C-F-1	I075000	ISI/PT/PT-106	B-6	ISI	-	-	-	-	-	-	s
C5.11	CF-3	ISI/UT/UT-208	BAFFLE-TO-OUTLET SHELL WELD	AUG	-	-	-	-	-	-	-
2	CVCS-CHRG			OWN	-	-	-	-	-	-	-
				PRE	-	-	-	-	-	-	-
C-F-1	I075100		B-6	ISI	-	-	-	-	-	-	-
C5.11	CF-4		OUTLET SHELL-TO-OUTLET CAP	AUG	-	-	-	-	-	-	-
2	CVCS-CHRG			OWN	-	-	-	-	-	-	-
				PRE	-	-	-	-	-	-	-
C-F-1	I075700		B-6	ISI	-	-	-	-	-	-	-
C5.11	1		CAP-TO-PIPE	AUG	-	-	-	-	-	-	-
2	CVCS-CHRG			OWN	-	-	-	-	-	-	-
				PRE	-	-	-	-	-	-	-
C-F-1	I075800		B-6	ISI	-	-	-	-	-	-	-
C5.11	2		PIPE-TO-ELBOW	AUG	-	-	-	-	-	-	-
2	CVCS-CHRG			OWN	-	-	-	-	-	-	-
				PRE	-	-	-	-	-	-	-
C-F-1	I075900	ISI/PT/PT-106	B-6	ISI	-	-	-	-	s	-	-
C5.11	3	ISI/UT/UT-208	ELBOW-TO-PIPE	AUG	-	-	-	-	-	-	-
2	CVCS-CHRG			OWN	-	-	-	-	-	-	-
				PRE	-	-	-	-	-	-	-
C-F-1	I076000	ISI/PT/PT-106	B-6	ISI	-	-	-	-	-	s	-
C5.11	4	ISI/UT/UT-208	PIPE-TO-ELBOW	AUG	-	-	-	-	-	-	-
2	CVCS-CHRG			OWN	-	-	-	-	-	-	-
				PRE	-	-	-	-	-	-	-
C-F-1	I076100		B-6	ISI	-	-	-	-	-	-	-
C5.11	5		ELBOW-TO-NOZZLE (PULSE DAMPENER)	AUG	-	-	-	-	-	-	-
2	CVCS-CHRG			OWN	-	-	-	-	-	-	-
				PRE	-	-	-	-	-	-	-

Category, ItemNO, Class	Summary / CompID / System	Scope / Method / Procedure	Iso No. Comp. Desc. Code Case		Period 1 00	Period 1 02	Period 2 03	Period 2 05	Period 2 06	Period 3 08	Period 3 09
C-F-1	I076200		B-6	ISI	-	-	-	-	-	-	-
C5.11	1		CAP-TO-PIPE	AUG	-	-	-	-	-	-	-
2	CVCS-CHRG			OWN	-	-	-	-	-	-	-
				PRE	-	-	-	-	-	-	-
C-F-1	I076300		B-6	ISI	-	-	-	-	-	-	-
C5.11	2		PIPE-TO-ELBOW	AUG	-	-	-	-	-	-	-
2	CVCS-CHRG			OWN	-	-	-	-	-	-	-
				PRE	-	-	-	-	-	-	-
C-F-1	I076400		B-6	ISI	-	-	-	-	-	-	-
C5.11	3		ELBOW-TO-PIPE	AUG	-	-	-	-	-	-	-
2	CVCS-CHRG			OWN	-	-	-	-	-	-	-
				PRE	-	-	-	-	-	-	-
C-F-1	I076500		B-6	ISI	-	-	-	-	-	-	-
C5.11	4		PIPE-TO-ELBOW	AUG	-	-	-	-	-	-	-
2	CVCS-CHRG			OWN	-	-	-	-	-	-	-
				PRE	-	-	-	-	-	-	-
C-F-1	I076600		B-6	ISI	-	-	-	-	-	-	-
C5.11	5		ELBOW-TO-NOZZLE (PULSE DAMPENER)	AUG	-	-	-	-	-	-	-
2	CVCS-CHRG			OWN	-	-	-	-	-	-	-
				PRE	-	-	-	-	-	-	-
C-F-1	I076700		B-6	ISI	-	-	-	-	-	-	-
C5.11	1		CAP-TO-PIPE	AUG	-	-	-	-	-	-	-
2	CVCS-CHRG			OWN	-	-	-	-	-	-	-
				PRE	-	-	-	-	-	-	-
C-F-1	I076800	ISI/PT/PT-106	B-6	ISI	-	-	-	-	-	s	-
C5.11	2	ISI/UT/UT-208	PIPE-TO-ELBOW	AUG	-	-	-	-	-	-	-
2	CVCS-CHRG			OWN	-	-	-	-	-	-	-
				PRE	-	-	-	-	-	-	-
C-F-1	I076900		B-6	ISI	-	-	-	-	-	-	-
C5.11	3		ELBOW-TO-PIPE	AUG	-	-	-	-	-	-	-
2	CVCS-CHRG			OWN	-	-	-	-	-	-	-
				PRE	-	-	-	-	-	-	-
C-F-1	I077000		B-6	ISI	-	-	-	-	-	-	-
C5.11	4		PIPE-TO-ELBOW	AUG	-	-	-	-	-	-	-
2	CVCS-CHRG			OWN	-	-	-	-	-	-	-
				PRE	-	-	-	-	-	-	-
C-F-1	I077100		B-6	ISI	-	-	-	-	-	-	-
C5.11	5		ELBOW-TO-PIPE	AUG	-	-	-	-	-	-	-
2	CVCS-CHRG			OWN	-	-	-	-	-	-	-
				PRE	-	-	-	-	-	-	-

Category, ItemNO, Class	Summary / CompID / System	Scope / Method / Procedure	Iso No. Comp. Desc. Code Case		Period 1 00	Period 1 02	Period 2 03	Period 2 05	Period 2 06	Period 3 08	Period 3 09
C-F-1	I077200		B-6	ISI	-	-	-	-	-	-	-
C5.11	6		PIPE-TO-ELBOW	AUG	-	-	-	-	-	-	-
2	CVCS-CHRG			OWN	-	-	-	-	-	-	-
				PRE	-	-	-	-	-	-	-
C-F-1	I077300		B-6	ISI	-	-	-	-	-	-	-
C5.11	7		ELBOW-TO-NOZZLE (PULSE DAMPENER)	AUG	-	-	-	-	-	-	-
2	CVCS-CHRG			OWN	-	-	-	-	-	-	-
				PRE	-	-	-	-	-	-	-
C-F-1	I160500	ISI/PT/PT-106	B-16B	ISI	-	-	-	-	s	-	-
C5.21	1	ISI/UT/UT-208	8X8X4 TEE-TO-PIPE	AUG	-	-	-	-	-	-	-
2	HPSI			OWN	-	-	-	-	-	-	-
				PRE	-	-	-	-	-	-	-
C-F-1	I160510		B-16B	ISI	-	-	-	-	-	-	-
C5.21	2		PIPE-TO-90 ELBOW	AUG	-	-	-	-	-	-	-
2	HPSI			OWN	-	-	-	-	-	-	-
				PRE	-	-	-	-	-	-	-
C-F-1	I160520		B-16B	ISI	-	-	-	-	-	-	-
C5.21	3		90 ELBOW-TO-PIPE	AUG	-	-	-	-	-	-	-
2	HPSI			OWN	-	-	-	-	-	-	-
				PRE	-	-	-	-	-	-	-
C-F-1	I160530		B-16B	ISI	-	-	-	-	-	-	-
C5.21	4		PIPE-TO-VALVE 890B	AUG	-	-	-	-	-	-	-
2	HPSI			OWN	-	-	-	-	-	-	-
				PRE	-	-	-	-	-	-	-
C-F-1	I160540		B-16B	ISI	-	-	-	-	-	-	-
C5.21	5		VALVE 890B-TO-90 ELBOW	AUG	-	-	-	-	-	-	-
2	HPSI			OWN	-	-	-	-	-	-	-
				PRE	-	-	-	-	-	-	-
C-F-1	I160560		B-16B	ISI	-	-	-	-	-	-	-
C5.21	6		90 ELBOW-TO-RFWN FLANGE (SI PUMP B IN)	AUG	-	-	-	-	-	-	-
2	HPSI			OWN	-	-	-	-	-	-	-
				PRE	-	-	-	-	-	-	-
C-F-1	I160570		B-16B	ISI	-	-	-	-	-	-	-
C5.21	7		8X8X4 TEE-TO-90 ELBOW	AUG	-	-	-	-	-	-	-
2	HPSI			OWN	-	-	-	-	-	-	-
				PRE	-	-	-	-	-	-	-
C-F-1	I160580		B-16B	ISI	-	-	-	-	-	-	-
C5.21	8		90 ELBOW-TO-PIPE	AUG	-	-	-	-	-	-	-
2	HPSI			OWN	-	-	-	-	-	-	-
				PRE	-	-	-	-	-	-	-

Category, ItemNO, Class	Summary / CompID / System	Scope / Method / Procedure	Iso No. Comp. Desc. Code Case		Period 1 00	Period 1 02	Period 2 03	Period 2 05	Period 2 06	Period 3 08	Period 3 09
C-F-1	I160590		B-16B	ISI	-	-	-	-	-	-	-
C5.21	9		PIPE-TO-90 ELBOW	AUG	-	-	-	-	-	-	-
2	HPSI			OWN	-	-	-	-	-	-	-
				PRE	-	-	-	-	-	-	-
C-F-1	I160600		B-16B	ISI	-	-	-	-	-	-	-
C5.21	10		90 ELBOW-TO-PIPE	AUG	-	-	-	-	-	-	-
2	HPSI			OWN	-	-	-	-	-	-	-
				PRE	-	-	-	-	-	-	-
C-F-1	I160610		B-16B	ISI	-	-	-	-	-	-	-
C5.21	11		PIPE-TO-VALVE 1815B	AUG	-	-	-	-	-	-	-
2	HPSI			OWN	-	-	-	-	-	-	-
				PRE	-	-	-	-	-	-	-
C-F-1	I160620		B-16B	ISI	-	-	-	-	-	-	-
C5.21	12		VALVE 1815B-TO-PIPE	AUG	-	-	-	-	-	-	-
2	HPSI			OWN	-	-	-	-	-	-	-
				PRE	-	-	-	-	-	-	-
C-F-1	I160630		B-16B	ISI	-	-	-	-	-	-	-
C5.21	13		PIPE-TO-VALVE 1815A	AUG	-	-	-	-	-	-	-
2	HPSI			OWN	-	-	-	-	-	-	-
				PRE	-	-	-	-	-	-	-
C-F-1	I160640		B-16B	ISI	-	-	-	-	-	-	-
C5.21	14		VALVE 1815A-TO-PIPE	AUG	-	-	-	-	-	-	-
2	HPSI			OWN	-	-	-	-	-	-	-
				PRE	-	-	-	-	-	-	-
C-F-1	I160660		B-16B	ISI	-	-	-	-	-	-	-
C5.21	16		PIPE-TO-4X4X4 TEE	AUG	-	-	-	-	-	-	-
2	HPSI			OWN	-	-	-	-	-	-	-
				PRE	-	-	-	-	-	-	-
C-F-1	I160662		B-16B	ISI	-	-	-	-	-	-	-
C5.21	19		4X4X4 TEE-TO-90 ELBOW	AUG	-	-	-	-	-	-	-
2	HPSI			OWN	-	-	-	-	-	-	-
				PRE	-	-	-	-	-	-	-
C-F-1	I160666		B-16B	ISI	-	-	-	-	-	-	-
C5.21	20		90 ELBOW-TO-PIPE	AUG	-	-	-	-	-	-	-
2	HPSI			OWN	-	-	-	-	-	-	-
				PRE	-	-	-	-	-	-	-
C-F-1	I160670		B-16B	ISI	-	-	-	-	-	-	-
C5.21	21		PIPE-TO-RFWN FLANGE (SI PUMP C IN)	AUG	-	-	-	-	-	-	-
2	HPSI			OWN	-	-	-	-	-	-	-
				PRE	-	-	-	-	-	-	-

Category, ItemNO, Class	Summary / CompID / System	Scope / Method / Procedure	Iso No. Comp. Desc. Code Case		Period 1 00	Period 1 02	Period 2 03	Period 2 05	Period 2 06	Period 3 08	Period 3 09
C-F-1	I160675		B-16B	ISI	-	-	-	-	-	-	-
C5.21	17		4X4X4 TEE-TO-6X4 REDUCER	AUG	-	-	-	-	-	-	-
2	HPSI			OWN	-	-	-	-	-	-	-
				PRE	-	-	-	-	-	-	-
C-F-1	I160730	ISI/PT/PT-106	B-16B	ISI	-	-	-	-	-	s	-
C5.21	22	ISI/UT/UT-208	8X4 REDUCER-TO-PIPE	AUG	-	-	-	-	-	-	-
2	HPSI			OWN	-	-	-	-	-	-	-
				PRE	-	-	-	-	-	-	-
C-F-1	I160760		B-16B	ISI	-	-	-	-	-	-	-
C5.21	23		PIPE-TO-90 ELBOW	AUG	-	-	-	-	-	-	-
2	HPSI			OWN	-	-	-	-	-	-	-
				PRE	-	-	-	-	-	-	-
C-F-1	I160770		B-16B	ISI	-	-	-	-	-	-	-
C5.21	24		90 ELBOW-TO-PIPE	AUG	-	-	-	-	-	-	-
2	HPSI			OWN	-	-	-	-	-	-	-
				PRE	-	-	-	-	-	-	-
C-F-1	I160790		B-16B	ISI	-	-	-	-	-	-	-
C5.21	25		PIPE-TO-45 ELBOW	AUG	-	-	-	-	-	-	-
2	HPSI			OWN	-	-	-	-	-	-	-
				PRE	-	-	-	-	-	-	-
C-F-1	I160800		B-16B	ISI	-	-	-	-	-	-	-
C5.21	26		45 ELBOW-TO-PIPE	AUG	-	-	-	-	-	-	-
2	HPSI			OWN	-	-	-	-	-	-	-
				PRE	-	-	-	-	-	-	-
C-F-1	I160810		B-16B	ISI	-	-	-	-	-	-	-
C5.21	27		PIPE-TO-90 ELBOW	AUG	-	-	-	-	-	-	-
2	HPSI			OWN	-	-	-	-	-	-	-
				PRE	-	-	-	-	-	-	-
C-F-1	I160820		B-16B	ISI	-	-	-	-	-	-	-
C5.21	28		90 ELBOW-TO-PIPE	AUG	-	-	-	-	-	-	-
2	HPSI			OWN	-	-	-	-	-	-	-
				PRE	-	-	-	-	-	-	-
C-F-1	I160830		B-16B	ISI	-	-	-	-	-	-	-
C5.21	29		PIPE-TO-VALVE 890A	AUG	-	-	-	-	-	-	-
2	HPSI			OWN	-	-	-	-	-	-	-
				PRE	-	-	-	-	-	-	-
C-F-1	I160840		B-16B	ISI	-	-	-	-	-	-	-
C5.21	30		VALVE 890A-TO-90 ELBOW	AUG	-	-	-	-	-	-	-
2	HPSI			OWN	-	-	-	-	-	-	-
				PRE	-	-	-	-	-	-	-

Category, ItemNO, Class	Summary / CompID / System	Scope / Method / Procedure	Iso No. Comp. Desc. Code Case		Period 1 00	Period 1 02	Period 2 03	Period 2 05	Period 2 06	Period 3 08	Period 3 09
C-F-1	I160860		B-16B	ISI	-	-	-	-	-	-	-
C5.21	31		90 ELBOW-TO-RFWN FLANGE (SI PUMP A IN)	AUG	-	-	-	-	-	-	-
2	HPSI			OWN	-	-	-	-	-	-	-
				PRE	-	-	-	-	-	-	-
C-F-1	I161000	ISI/PT/PT-106	B-37	ISI	-	c	-	-	-	-	-
C5.21	1	ISI/UT/UT-208	FLANGE-TO-ELBOW (SI PUMP A OUT)	AUG	-	-	-	-	-	-	-
2	HPSI			OWN	-	-	-	-	-	-	-
				PRE	-	-	-	-	-	-	-
C-F-1	I161010		B-37	ISI	-	-	-	-	-	-	-
C5.21	2		ELBOW-TO-PIPE	AUG	-	-	-	-	-	-	-
2	HPSI			OWN	-	-	-	-	-	-	-
				PRE	-	-	-	-	-	-	-
C-F-1	I161013		B-37	ISI	-	-	-	-	-	-	-
C5.21	2A		PIPE-TO-TEE	AUG	-	-	-	-	-	-	-
2	HPSI			OWN	-	-	-	-	-	-	-
				PRE	-	-	-	-	-	-	-
C-F-1	I161015		B-37	ISI	-	-	-	-	-	-	-
C5.21	2B		TEE-TO-REDUCER	AUG	-	-	-	-	-	-	-
2	HPSI			OWN	-	-	-	-	-	-	-
				PRE	-	-	-	-	-	-	-
C-F-1	I161018		B-37	ISI	-	-	-	-	-	-	-
C5.21	2C		TEE-TO-PIPE	AUG	-	-	-	-	-	-	-
2	HPSI			OWN	-	-	-	-	-	-	-
				PRE	-	-	-	-	-	-	-
C-F-1	I161030		B-37	ISI	-	-	-	-	-	-	-
C5.21	4		PIPE-TO-VALVE(889A)	AUG	-	-	-	-	-	-	-
2	HPSI			OWN	-	-	-	-	-	-	-
				PRE	-	-	-	-	-	-	-
C-F-1	I161040		B-37	ISI	-	-	-	-	-	-	-
C5.21	5		VALVE 889A TO PIPE	AUG	-	-	-	-	-	-	-
2	HPSI			OWN	-	-	-	-	-	-	-
				PRE	-	-	-	-	-	-	-
C-F-1	I161060		B-37	ISI	-	-	-	-	-	-	-
C5.21	7		PIPE-TO-VALVE(888A)	AUG	-	-	-	-	-	-	-
2	HPSI			OWN	-	-	-	-	-	-	-
				PRE	-	-	-	-	-	-	-
C-F-1	I161070		B-37	ISI	-	-	-	-	-	-	-
C5.21	8		VALVE 888A TO PIPE	AUG	-	-	-	-	-	-	-
2	HPSI			OWN	-	-	-	-	-	-	-
				PRE	-	-	-	-	-	-	-

Category, ItemNO, Class	Summary / CompID / System	Scope / Method / Procedure	Iso No. Comp. Desc. Code Case		Period 1 00	Period 1 02	Period 2 03	Period 2 05	Period 2 06	Period 3 08	Period 3 09
C-F-1	I161080		B-37	ISI	-	-	-	-	-	-	-
C5.21	9		PIPE-TO-ELBOW	AUG	-	-	-	-	-	-	-
2	HPSI			OWN	-	-	-	-	-	-	-
				PRE	-	-	-	-	-	-	-
C-F-1	I161090		B-37	ISI	-	-	-	-	-	-	-
C5.21	10		ELBOW-TO-PIPE	AUG	-	-	-	-	-	-	-
2	HPSI			OWN	-	-	-	-	-	-	-
				PRE	-	-	-	-	-	-	-
C-F-1	I161105		B-37	ISI	-	-	-	-	-	-	-
C5.21	10A		PIPE-TO-ELBOW	AUG	-	-	-	-	-	-	-
2	HPSI			OWN	-	-	-	-	-	-	-
				PRE	-	-	-	-	-	-	-
C-F-1	I161108		B-37	ISI	-	-	-	-	-	-	-
C5.21	10B		ELBOW-TO-PIPE	AUG	-	-	-	-	-	-	-
2	HPSI			OWN	-	-	-	-	-	-	-
				PRE	-	-	-	-	-	-	-
C-F-1	I161130		B-37	ISI	-	-	-	-	-	-	-
C5.21	11		PIPE-TO-ELBOW	AUG	-	-	-	-	-	-	-
2	HPSI			OWN	-	-	-	-	-	-	-
				PRE	-	-	-	-	-	-	-
C-F-1	I161140	ISI/PT/PT-106	B-37	ISI	-	-	-	-	s	-	-
C5.21	12	ISI/UT/UT-208	ELBOW-TO-PIPE	AUG	-	-	-	-	-	-	-
2	HPSI			OWN	-	-	-	-	-	-	-
				PRE	-	-	-	-	-	-	-
C-F-1	I161170		B-37	ISI	-	-	-	-	-	-	-
C5.21	13		PIPE-TO-ELBOW	AUG	-	-	-	-	-	-	-
2	HPSI			OWN	-	-	-	-	-	-	-
				PRE	-	-	-	-	-	-	-
C-F-1	I161180		B-37	ISI	-	-	-	-	-	-	-
C5.21	14		ELBOW-TO-PIPE	AUG	-	-	-	-	-	-	-
2	HPSI			OWN	-	-	-	-	-	-	-
				PRE	-	-	-	-	-	-	-
C-F-1	I161200		B-37	ISI	-	-	-	-	-	-	-
C5.21	15		PIPE-TO-ELBOW	AUG	-	-	-	-	-	-	-
2	HPSI			OWN	-	-	-	-	-	-	-
				PRE	-	-	-	-	-	-	-
C-F-1	I161210		B-37	ISI	-	-	-	-	-	-	-
C5.21	16		ELBOW-TO-PIPE	AUG	-	-	-	-	-	-	-
2	HPSI			OWN	-	-	-	-	-	-	-
				PRE	-	-	-	-	-	-	-

Category, ItemNO, Class	Summary / CompID / System	Scope / Method / Procedure	Iso No. Comp. Desc. Code Case		Period 1 00	Period 1 02	Period 2 03	Period 2 05	Period 2 06	Period 3 08	Period 3 09
C-F-1	I161230		B-37	ISI	-	-	-	-	-	-	-
C5.21	17		PIPE-TO-ELBOW	AUG	-	-	-	-	-	-	-
2	HPSI			OWN	-	-	-	-	-	-	-
				PRE	-	-	-	-	-	-	-
C-F-1	I161240		B-37	ISI	-	-	-	-	-	-	-
C5.21	18		ELBOW-TO-PIPE	AUG	-	-	-	-	-	-	-
2	HPSI			OWN	-	-	-	-	-	-	-
				PRE	-	-	-	-	-	-	-
C-F-1	I161280		B-37	ISI	-	-	-	-	-	-	-
C5.21	19		PIPE-TO-ELBOW	AUG	-	-	-	-	-	-	-
2	HPSI			OWN	-	-	-	-	-	-	-
				PRE	-	-	-	-	-	-	-
C-F-1	I161290		B-37	ISI	-	-	-	-	-	-	-
C5.21	20		ELBOW-TO-PIPE	AUG	-	-	-	-	-	-	-
2	HPSI			OWN	-	-	-	-	-	-	-
				PRE	-	-	-	-	-	-	-
C-F-1	I161310	ISI/PT/PT-106	B-37	ISI	-	-	-	-	-	s	-
C5.21	21	ISI/UT/UT-208	PIPE-TO-REDUCER	AUG	-	-	-	-	-	-	-
2	HPSI			OWN	-	-	-	-	-	-	-
				PRE	-	-	-	-	-	-	-
C-F-1	I161320		B-37	ISI	-	-	-	-	-	-	-
C5.21	22		REDUCER-TO-TEE	AUG	-	-	-	-	-	-	-
2	HPSI			OWN	-	-	-	-	-	-	-
				PRE	-	-	-	-	-	-	-
C-F-1	I161330		B-37	ISI	-	-	-	-	-	-	-
C5.21	23		TEE-TO-PIPE	AUG	-	-	-	-	-	-	-
2	HPSI			OWN	-	-	-	-	-	-	-
				PRE	-	-	-	-	-	-	-
C-F-1	I161360	ISI/PT/PT-106	B-37	ISI	-	-	-	-	-	s	-
C5.21	25	ISI/UT/UT-208	PIPE-TO-ELBOW	AUG	-	-	-	-	-	-	-
2	HPSI			OWN	-	-	-	-	-	-	-
				PRE	-	-	-	-	-	-	-
C-F-1	I161370		B-37	ISI	-	-	-	-	-	-	-
C5.21	26		ELBOW-TO-PIPE	AUG	-	-	-	-	-	-	-
2	HPSI			OWN	-	-	-	-	-	-	-
				PRE	-	-	-	-	-	-	-
C-F-1	I161380		B-37	ISI	-	-	-	-	-	-	-
C5.21	27		PIPE-TO-ELBOW	AUG	-	-	-	-	-	-	-
2	HPSI			OWN	-	-	-	-	-	-	-
				PRE	-	-	-	-	-	-	-

Category, ItemNO, Class	Summary / CompID / System	Scope / Method / Procedure	Iso No. Comp. Desc. Code Case		Period 1 00	Period 1 02	Period 2 03	Period 2 05	Period 2 06	Period 3 08	Period 3 09
C-F-1	I161400		B-37	ISI	-	-	-	-	-	-	-
C5.21	28		ELBOW-TO-PIPE	AUG	-	-	-	-	-	-	-
2	HPSI			OWN	-	-	-	-	-	-	-
				PRE	-	-	-	-	-	-	-
C-F-1	I161410		B-37	ISI	-	-	-	-	-	-	-
C5.21	29		PIPE-TO-ELBOW	AUG	-	-	-	-	-	-	-
2	HPSI			OWN	-	-	-	-	-	-	-
				PRE	-	-	-	-	-	-	-
C-F-1	I161420		B-37	ISI	-	-	-	-	-	-	-
C5.21	30		ELBOW-TO-PEN 113 (OUTCV)	AUG	-	-	-	-	-	-	-
2	HPSI			OWN	-	-	-	-	-	-	-
				PRE	-	-	-	-	-	-	-
C-F-1	I161430		B-38	ISI	-	-	-	-	-	-	-
C5.21	31		PEN(113)-TO-PIPE (INCV)	AUG	-	-	-	-	-	-	-
2	HPSI			OWN	-	-	-	-	-	-	-
				PRE	-	-	-	-	-	-	-
C-F-1	I161450		B-38	ISI	-	-	-	-	-	-	-
C5.21	33		PIPE-TO-ELBOW	AUG	-	-	-	-	-	-	-
2	HPSI			OWN	-	-	-	-	-	-	-
				PRE	-	-	-	-	-	-	-
C-F-1	I161460		B-38	ISI	-	-	-	-	-	-	-
C5.21	34		ELBOW-TO-PIPE	AUG	-	-	-	-	-	-	-
2	HPSI			OWN	-	-	-	-	-	-	-
				PRE	-	-	-	-	-	-	-
C-F-1	I161470	ISI/PT/PT-106	B-38	ISI	-	-	-	-	-	s	-
C5.21	35	ISI/UT/UT-208	PIPE-TO-ELBOW	AUG	-	-	-	-	-	-	-
2	HPSI			OWN	-	-	-	-	-	-	-
				PRE	-	-	-	-	-	-	-
C-F-1	I161480		B-38	ISI	-	-	-	-	-	-	-
C5.21	36		ELBOW-TO-PIPE	AUG	-	-	-	-	-	-	-
2	HPSI			OWN	-	-	-	-	-	-	-
				PRE	-	-	-	-	-	-	-
C-F-1	I161510		B-38	ISI	-	-	-	-	-	-	-
C5.21	37		PIPE-TO-PIPE	AUG	-	-	-	-	-	-	-
2	HPSI			OWN	-	-	-	-	-	-	-
				PRE	-	-	-	-	-	-	-
C-F-1	I161550		B-38	ISI	-	-	-	-	-	-	-
C5.21	38		PIPE-TO-ELBOW	AUG	-	-	-	-	-	-	-
2	HPSI			OWN	-	-	-	-	-	-	-
				PRE	-	-	-	-	-	-	-

Category, ItemNO, Class	Summary / CompID / System	Scope / Method / Procedure	Iso No. Comp. Desc. Code Case		Period 1 00	Period 1 02	Period 2 03	Period 2 05	Period 2 06	Period 3 08	Period 3 09
C-F-1	I161560		B-38	ISI	-	-	-	-	-	-	-
C5.21	39		ELBOW-TO-PIPE	AUG	-	-	-	-	-	-	-
2	HPSI			OWN	-	-	-	-	-	-	-
				PRE	-	-	-	-	-	-	-
C-F-1	I161570	ISI/PT/PT-106	B-38	ISI	-	c	-	-	-	-	-
C5.21	40	ISI/UT/UT-208	ELBOW-TO-ELBOW	AUG	-	-	-	-	-	-	-
2	HPSI			OWN	-	-	-	-	-	-	-
				PRE	-	-	-	-	-	-	-
C-F-1	I161580		B-38	ISI	-	-	-	-	-	-	-
C5.21	41		ELBOW-TO-PIPE	AUG	-	-	-	-	-	-	-
2	HPSI			OWN	-	-	-	-	-	-	-
				PRE	-	-	-	-	-	-	-
C-F-1	I161590		B-38	ISI	-	-	-	-	-	-	-
C5.21	42		PIPE-TO-FLANGE(FT-924)	AUG	-	-	-	-	-	-	-
2	HPSI			OWN	-	-	-	-	-	-	-
				PRE	-	-	-	-	-	-	-
C-F-1	I161620		B-38	ISI	-	-	-	-	-	-	-
C5.21	45		FLANGE(FT-924)-TO-PIPE	AUG	-	-	-	-	-	-	-
2	HPSI			OWN	-	-	-	-	-	-	-
				PRE	-	-	-	-	-	-	-
C-F-1	I161640		B-38	ISI	-	-	-	-	-	-	-
C5.21	46		PIPE-TO-ELBOW	AUG	-	-	-	-	-	-	-
2	HPSI			OWN	-	-	-	-	-	-	-
				PRE	-	-	-	-	-	-	-
C-F-1	I161650		B-38	ISI	-	-	-	-	-	-	-
C5.21	47		ELBOW-TO-PIPE	AUG	-	-	-	-	-	-	-
2	HPSI			OWN	-	-	-	-	-	-	-
				PRE	-	-	-	-	-	-	-
C-F-1	I161660		B-38	ISI	-	-	-	-	-	-	-
C5.21	48		PIPE-TO-TEE	AUG	-	-	-	-	-	-	-
2	HPSI			OWN	-	-	-	-	-	-	-
				PRE	-	-	-	-	-	-	-
C-F-1	I161670	ISI/PT/PT-106	B-38	ISI	-	-	-	-	-	-	s
C5.21	49	ISI/UT/UT-208	TEE-TO-REDUCER	AUG	-	-	-	-	-	-	-
2	HPSI			OWN	-	-	-	-	-	-	-
				PRE	-	-	-	-	-	-	-
C-F-1	I162500		B-40	ISI	-	-	-	-	-	-	-
C5.21	1		FLANGE-TO-ELBOW (SI PUMP C OUT)	AUG	-	-	-	-	-	-	-
2	HPSI			OWN	-	-	-	-	-	-	-
				PRE	-	-	-	-	-	-	-

Category, ItemNO, Class	Summary / CompID / System	Scope / Method / Procedure	Iso No. Comp. Desc. Code Case		Period 1 00	Period 1 02	Period 2 03	Period 2 05	Period 2 06	Period 3 08	Period 3 09
C-F-1	I162510		B-40	ISI	-	-	-	-	-	-	-
C5.21	2		ELBOW-TO-PIPE	AUG	-	-	-	-	-	-	-
2	HPSI			OWN	-	-	-	-	-	-	-
				PRE	-	-	-	-	-	-	-
C-F-1	I162530		B-40	ISI	-	-	-	-	-	-	-
C5.21	4		PIPE-TO-ELBOW	AUG	-	-	-	-	-	-	-
2	HPSI			OWN	-	-	-	-	-	-	-
				PRE	-	-	-	-	-	-	-
C-F-1	I162550		B-40	ISI	-	-	-	-	-	-	-
C5.21	5		ELBOW-TO-PIPE	AUG	-	-	-	-	-	-	-
2	HPSI			OWN	-	-	-	-	-	-	-
				PRE	-	-	-	-	-	-	-
C-F-1	I162580		B-40	ISI	-	-	-	-	-	-	-
C5.21	6		PIPE-TO-ELBOW	AUG	-	-	-	-	-	-	-
2	HPSI			OWN	-	-	-	-	-	-	-
				PRE	-	-	-	-	-	-	-
C-F-1	I162590		B-40	ISI	-	-	-	-	-	-	-
C5.21	7		ELBOW-TO-PIPE	AUG	-	-	-	-	-	-	-
2	HPSI			OWN	-	-	-	-	-	-	-
				PRE	-	-	-	-	-	-	-
C-F-1	I162620		B-40	ISI	-	-	-	-	-	-	-
C5.21	8		PIPE-TO-ELBOW	AUG	-	-	-	-	-	-	-
2	HPSI			OWN	-	-	-	-	-	-	-
				PRE	-	-	-	-	-	-	-
C-F-1	I162630	ISI/UT/UT-208	B-40	ISI	-	-	c	-	-	-	-
C5.21	9	ISI/PT/PT-106	ELBOW-TO-PIPE	AUG	-	-	-	-	-	-	-
2	HPSI			OWN	-	-	-	-	-	-	-
				PRE	-	-	-	-	-	-	-
C-F-1	I162650		B-40	ISI	-	-	-	-	-	-	-
C5.21	10		PIPE-TO-ELBOW	AUG	-	-	-	-	-	-	-
2	HPSI			OWN	-	-	-	-	-	-	-
				PRE	-	-	-	-	-	-	-
C-F-1	I162660		B-40	ISI	-	-	-	-	-	-	-
C5.21	11		ELBOW-TO-PIPE	AUG	-	-	-	-	-	-	-
2	HPSI			OWN	-	-	-	-	-	-	-
				PRE	-	-	-	-	-	-	-
C-F-1	I162680		B-40	ISI	-	-	-	-	-	-	-
C5.21	12		PIPE-TO-ELBOW	AUG	-	-	-	-	-	-	-
2	HPSI			OWN	-	-	-	-	-	-	-
				PRE	-	-	-	-	-	-	-

Category, ItemNO, Class	Summary / CompID / System	Scope / Method / Procedure	Iso No. Comp. Desc. Code Case		Period 1 00	Period 1 02	Period 2 03	Period 2 05	Period 2 06	Period 3 08	Period 3 09
C-F-1	I162690	ISI/PT/PT-106	B-40	ISI	-	c	-	-	-	-	-
C5.21	13	ISI/UT/UT-208	ELBOW-TO-PIPE	AUG	-	-	-	-	-	-	-
2	HPSI			OWN	-	-	-	-	-	-	-
				PRE	-	-	-	-	-	-	-
C-F-1	I162710		B-40	ISI	-	-	-	-	-	-	-
C5.21	14		PIPE-TO-ELBOW	AUG	-	-	-	-	-	-	-
2	HPSI			OWN	-	-	-	-	-	-	-
				PRE	-	-	-	-	-	-	-
C-F-1	I162720		B-40	ISI	-	-	-	-	-	-	-
C5.21	15		ELBOW-TO-PIPE	AUG	-	-	-	-	-	-	-
2	HPSI			OWN	-	-	-	-	-	-	-
				PRE	-	-	-	-	-	-	-
C-F-1	I162740	ISI/PT/PT-106	B-40	ISI	c	-	-	-	-	-	-
C5.21	16	ISI/UT/UT-208	PIPE-TO-ELBOW	AUG	-	-	-	-	-	-	-
2	HPSI			OWN	-	-	-	-	-	-	-
				PRE	-	-	-	-	-	-	-
C-F-1	I162750		B-40	ISI	-	-	-	-	-	-	-
C5.21	17		ELBOW-TO-PIPE	AUG	-	-	-	-	-	-	-
2	HPSI			OWN	-	-	-	-	-	-	-
				PRE	-	-	-	-	-	-	-
C-F-1	I162770	ISI/PT/PT-106	B-41	ISI	-	-	-	-	-	s	-
C5.21	18	ISI/UT/UT-208	PIPE-TO-TEE	AUG	-	-	-	-	-	-	-
2	HPSI			OWN	-	-	-	-	-	-	-
				PRE	-	-	-	-	-	-	-
C-F-1	I163000	ISI/UT/UT-208	B-41	ISI	-	-	c	-	-	-	-
C5.21	1	ISI/PT/PT-106	TEE-TO-PIPE	AUG	-	-	-	-	-	-	-
2	HPSI			OWN	-	-	-	-	-	-	-
				PRE	-	-	-	-	-	-	-
C-F-1	I163010		B-41	ISI	-	-	-	-	-	-	-
C5.21	2		PIPE-TO-ELBOW	AUG	-	-	-	-	-	-	-
2	HPSI			OWN	-	-	-	-	-	-	-
				PRE	-	-	-	-	-	-	-
C-F-1	I163030	ISI/PT/PT-106	B-41	ISI	-	-	-	-	s	-	-
C5.21	3	ISI/UT/UT-208	ELBOW-TO-PIPE	AUG	-	-	-	-	-	-	-
2	HPSI			OWN	-	-	-	-	-	-	-
				PRE	-	-	-	-	-	-	-
C-F-1	I163050		B-41	ISI	-	-	-	-	-	-	-
C5.21	4		PIPE-TO-ELBOW	AUG	-	-	-	-	-	-	-
2	HPSI			OWN	-	-	-	-	-	-	-
				PRE	-	-	-	-	-	-	-

Category, ItemNO, Class	Summary / CompID / System	Scope / Method / Procedure	Iso No. Comp. Desc. Code Case		Period 1 00	Period 1 02	Period 2 03	Period 2 05	Period 2 06	Period 3 08	Period 3 09
C-F-1	I163060		B-41	ISI	-	-	-	-	-	-	-
C5.21	5		ELBOW-TO-PIPE	AUG	-	-	-	-	-	-	-
2	HPSI			OWN	-	-	-	-	-	-	-
				PRE	-	-	-	-	-	-	-
C-F-1	I163070	ISI/PT/PT-106	B-41	ISI	-	-	-	-	-	-	s
C5.21	6	ISI/UT/UT-208	PIPE-TO-VALVE(870A)	AUG	-	-	-	-	-	-	-
2	HPSI			OWN	-	-	-	-	-	-	-
				PRE	-	-	-	-	-	-	-
C-F-1	I163080	ISI/PT/PT-106	B-41	ISI	c	-	-	-	-	-	-
C5.21	7	ISI/RT/RT-104	VALVE 870A TO VALVE 871A	AUG	-	-	-	-	-	-	-
2	HPSI			OWN	-	-	-	-	-	-	-
				PRE	-	-	-	-	-	-	-
C-F-1	I163100		B-41	ISI	-	-	-	-	-	-	-
C5.21	9		VALVE 871A TO PIPE	AUG	-	-	-	-	-	-	-
2	HPSI			OWN	-	-	-	-	-	-	-
				PRE	-	-	-	-	-	-	-
C-F-1	I163110	ISI/PT/PT-106	B-41	ISI	c	-	-	-	-	-	-
C5.21	10	ISI/UT/UT-208	PIPE-TO-TEE	AUG	-	-	-	-	-	-	-
2	HPSI			OWN	-	-	-	-	-	-	-
				PRE	-	-	-	-	-	-	-
C-F-1	I163200	ISI/PT/PT-106	B-41	ISI	c	-	-	-	-	-	-
C5.21	12	ISI/UT/UT-208	TEE-TO-PIPE	AUG	-	-	-	-	-	-	-
2	HPSI			OWN	-	-	-	-	-	-	-
				PRE	-	-	-	-	-	-	-
C-F-1	I163210		B-41	ISI	-	-	-	-	-	-	-
C5.21	13		PIPE-TO-VALVE(871B)	AUG	-	-	-	-	-	-	-
2	HPSI			OWN	-	-	-	-	-	-	-
				PRE	-	-	-	-	-	-	-
C-F-1	I163220	PSI/PT/PT-106	B-41	ISI	-	-	-	-	-	-	-
C5.21	14	PSI/UT/ISwT-PDI-UT 1	VALVE 871B TO PIPE	AUG	-	-	-	-	-	-	-
2	HPSI	PSI/UT/ISwT-PDI-UT 1		OWN	-	-	-	-	-	-	-
		PSI/UT/UT-208		PRE	-	c	-	-	-	-	-
C-F-1	I163230	PSI/PT/PT-106	B-41	ISI	-	-	-	-	-	-	-
C5.21	15	PSI/UT/ISwT-PDI-UT 1	PIPE TO VALVE 870B	AUG	-	-	-	-	-	-	-
2	HPSI	PSI/UT/ISwT-PDI-UT 1		OWN	-	-	-	-	-	-	-
		PSI/UT/UT-208		PRE	-	c	-	-	-	-	-
C-F-1	I163240		B-41	ISI	-	-	-	-	-	-	-
C5.21	16		VALVE 870B TO PIPE	AUG	-	-	-	-	-	-	-
2	HPSI			OWN	-	-	-	-	-	-	-
				PRE	-	-	-	-	-	-	-

Category, ItemNO, Class	Summary / CompID / System	Scope / Method / Procedure	Iso No. Comp. Desc. Code Case		Period 1 00	Period 1 02	Period 2 03	Period 2 05	Period 2 06	Period 3 08	Period 3 09
C-F-1	I163250	PSI/PT/PT-106	B-41	ISI	-	-	-	-	-	-	-
C5.21	17	PSI/UT/ISwT-PDI-UT 1	PIPE-TO-ELBOW	AUG	-	-	-	-	-	-	-
2	HPSI	PSI/UT/ISwT-PDI-UT 1		OWN	-	-	-	-	-	-	-
				PRE	-	c	-	-	-	-	-
C-F-1	I163260		B-41	ISI	-	-	-	-	-	-	-
C5.21	18		ELBOW-TO-PIPE	AUG	-	-	-	-	-	-	-
2	HPSI			OWN	-	-	-	-	-	-	-
				PRE	-	-	-	-	-	-	-
C-F-1	I163280		B-41	ISI	-	-	-	-	-	-	-
C5.21	19		PIPE-TO-ELBOW	AUG	-	-	-	-	-	-	-
2	HPSI			OWN	-	-	-	-	-	-	-
				PRE	-	-	-	-	-	-	-
C-F-1	I163300	ISI/PT/PT-106	B-41	ISI	-	-	-	-	-	s	-
C5.21	20	ISI/UT/UT-208	ELBOW-TO-PIPE	AUG	-	-	-	-	-	-	-
2	HPSI			OWN	-	-	-	-	-	-	-
				PRE	-	-	-	-	-	-	-
C-F-1	I163310		B-41	ISI	-	-	-	-	-	-	-
C5.21	21		PIPE-TO-ELBOW	AUG	-	-	-	-	-	-	-
2	HPSI			OWN	-	-	-	-	-	-	-
				PRE	-	-	-	-	-	-	-
C-F-1	I163320		B-41	ISI	-	-	-	-	-	-	-
C5.21	22		ELBOW-TO-PIPE	AUG	-	-	-	-	-	-	-
2	HPSI			OWN	-	-	-	-	-	-	-
				PRE	-	-	-	-	-	-	-
C-F-1	I163330		B-41	ISI	-	-	-	-	-	-	-
C5.21	23		PIPE-TO-TEE	AUG	-	-	-	-	-	-	-
2	HPSI			OWN	-	-	-	-	-	-	-
				PRE	-	-	-	-	-	-	-
C-F-1	I163500		B-42	ISI	-	-	-	-	-	-	-
C5.21	1		FLANGE-TO-ELBOW (SI PUMP B OUT)	AUG	-	-	-	-	-	-	-
2	HPSI			OWN	-	-	-	-	-	-	-
				PRE	-	-	-	-	-	-	-
C-F-1	I163510		B-42	ISI	-	-	-	-	-	-	-
C5.21	2		ELBOW-TO-PIPE	AUG	-	-	-	-	-	-	-
2	HPSI			OWN	-	-	-	-	-	-	-
				PRE	-	-	-	-	-	-	-
C-F-1	I163513		B-42	ISI	-	-	-	-	-	-	-
C5.21	2A		PIPE-TO-TEE	AUG	-	-	-	-	-	-	-
2	HPSI			OWN	-	-	-	-	-	-	-
				PRE	-	-	-	-	-	-	-

Category, ItemNO, Class	Summary / CompID / System	Scope / Method / Procedure	Iso No. Comp. Desc. Code Case		Period 1 00	Period 1 02	Period 2 03	Period 2 05	Period 2 06	Period 3 08	Period 3 09
C-F-1	I163515		B-42	ISI	-	-	-	-	-	-	-
C5.21	2B		TEE-TO-REDUCER	AUG	-	-	-	-	-	-	-
2	HPSI			OWN	-	-	-	-	-	-	-
				PRE	-	-	-	-	-	-	-
C-F-1	I163518		B-42	ISI	-	-	-	-	-	-	-
C5.21	2C		TEE-TO-PIPE	AUG	-	-	-	-	-	-	-
2	HPSI			OWN	-	-	-	-	-	-	-
				PRE	-	-	-	-	-	-	-
C-F-1	I163530		B-42	ISI	-	-	-	-	-	-	-
C5.21	4		PIPE-TO-VALVE(889B)	AUG	-	-	-	-	-	-	-
2	HPSI			OWN	-	-	-	-	-	-	-
				PRE	-	-	-	-	-	-	-
C-F-1	I163540		B-42	ISI	-	-	-	-	-	-	-
C5.21	5		VALVE 889B TO PIPE	AUG	-	-	-	-	-	-	-
2	HPSI			OWN	-	-	-	-	-	-	-
				PRE	-	-	-	-	-	-	-
C-F-1	I163560		B-42	ISI	-	-	-	-	-	-	-
C5.21	7		PIPE-TO-VALVE(888B)	AUG	-	-	-	-	-	-	-
2	HPSI			OWN	-	-	-	-	-	-	-
				PRE	-	-	-	-	-	-	-
C-F-1	I163570	ISI/UT/UT-208	B-42	ISI	-	-	c	-	-	-	-
C5.21	8	ISI/PT/PT-106	VALVE 888B TO PIPE	AUG	-	-	-	-	-	-	-
2	HPSI			OWN	-	-	-	-	-	-	-
				PRE	-	-	-	-	-	-	-
C-F-1	I163580		B-42	ISI	-	-	-	-	-	-	-
C5.21	9		PIPE-TO-ELBOW	AUG	-	-	-	-	-	-	-
2	HPSI			OWN	-	-	-	-	-	-	-
				PRE	-	-	-	-	-	-	-
C-F-1	I163600		B-42	ISI	-	-	-	-	-	-	-
C5.21	10		ELBOW-TO-PIPE	AUG	-	-	-	-	-	-	-
2	HPSI			OWN	-	-	-	-	-	-	-
				PRE	-	-	-	-	-	-	-
C-F-1	I163610		B-42	ISI	-	-	-	-	-	-	-
C5.21	11		PIPE-TO-ELBOW	AUG	-	-	-	-	-	-	-
2	HPSI			OWN	-	-	-	-	-	-	-
				PRE	-	-	-	-	-	-	-
C-F-1	I163620		B-42	ISI	-	-	-	-	-	-	-
C5.21	12		ELBOW-TO-PIPE	AUG	-	-	-	-	-	-	-
2	HPSI			OWN	-	-	-	-	-	-	-
				PRE	-	-	-	-	-	-	-

Category, ItemNO, Class	Summary / CompID / System	Scope / Method / Procedure	Iso No. Comp. Desc. Code Case		Period 1 00	Period 1 02	Period 2 03	Period 2 05	Period 2 06	Period 3 08	Period 3 09
C-F-1	I163660		B-42	ISI	-	-	-	-	-	-	-
C5.21	13		PIPE-TO-ELBOW	AUG	-	-	-	-	-	-	-
2	HPSI			OWN	-	-	-	-	-	-	-
				PRE	-	-	-	-	-	-	-
C-F-1	I163670		B-42	ISI	-	-	-	-	-	-	-
C5.21	14		ELBOW-TO-PIPE	AUG	-	-	-	-	-	-	-
2	HPSI			OWN	-	-	-	-	-	-	-
				PRE	-	-	-	-	-	-	-
C-F-1	I163700		B-42	ISI	-	-	-	-	-	-	-
C5.21	15		PIPE-TO-ELBOW	AUG	-	-	-	-	-	-	-
2	HPSI			OWN	-	-	-	-	-	-	-
				PRE	-	-	-	-	-	-	-
C-F-1	I163710	ISI/PT/PT-106	B-42	ISI	c	-	-	-	-	-	-
C5.21	16	ISI/UT/UT-208	ELBOW-TO-PIPE	AUG	-	-	-	-	-	-	-
2	HPSI			OWN	-	-	-	-	-	-	-
				PRE	-	-	-	-	-	-	-
C-F-1	I163730		B-42	ISI	-	-	-	-	-	-	-
C5.21	17		PIPE-TO-ELBOW	AUG	-	-	-	-	-	-	-
2	HPSI			OWN	-	-	-	-	-	-	-
				PRE	-	-	-	-	-	-	-
C-F-1	I163740		B-42	ISI	-	-	-	-	-	-	-
C5.21	18		ELBOW-TO-PIPE	AUG	-	-	-	-	-	-	-
2	HPSI			OWN	-	-	-	-	-	-	-
				PRE	-	-	-	-	-	-	-
C-F-1	I163760		B-42	ISI	-	-	-	-	-	-	-
C5.21	19		PIPE-TO-ELBOW	AUG	-	-	-	-	-	-	-
2	HPSI			OWN	-	-	-	-	-	-	-
				PRE	-	-	-	-	-	-	-
C-F-1	I163770		B-42	ISI	-	-	-	-	-	-	-
C5.21	20		ELBOW-TO-PIPE	AUG	-	-	-	-	-	-	-
2	HPSI			OWN	-	-	-	-	-	-	-
				PRE	-	-	-	-	-	-	-
C-F-1	I163800	ISI/PT/PT-106	B-42	ISI	-	-	-	-	-	-	s
C5.21	21	ISI/UT/UT-208	PIPE-TO-ELBOW	AUG	-	-	-	-	-	-	-
2	HPSI			OWN	-	-	-	-	-	-	-
				PRE	-	-	-	-	-	-	-
C-F-1	I163810		B-42	ISI	-	-	-	-	-	-	-
C5.21	22		ELBOW-TO-PIPE	AUG	-	-	-	-	-	-	-
2	HPSI			OWN	-	-	-	-	-	-	-
				PRE	-	-	-	-	-	-	-

Category, ItemNO, Class	Summary / CompID / System	Scope / Method / Procedure	Iso No. Comp. Desc. Code Case		Period 1 00	Period 1 02	Period 2 03	Period 2 05	Period 2 06	Period 3 08	Period 3 09
C-F-1	I163840		B-42	ISI	-	-	-	-	-	-	-
C5.21	23		PIPE-TO-REDUCER	AUG	-	-	-	-	-	-	-
2	HPSI			OWN	-	-	-	-	-	-	-
				PRE	-	-	-	-	-	-	-
C-F-1	I163850		B-42	ISI	-	-	-	-	-	-	-
C5.21	24		REDUCER-TO-TEE	AUG	-	-	-	-	-	-	-
2	HPSI			OWN	-	-	-	-	-	-	-
				PRE	-	-	-	-	-	-	-
C-F-1	I163860		B-42	ISI	-	-	-	-	-	-	-
C5.21	25		TEE-TO-ELBOW	AUG	-	-	-	-	-	-	-
2	HPSI			OWN	-	-	-	-	-	-	-
				PRE	-	-	-	-	-	-	-
C-F-1	I163880		B-42	ISI	-	-	-	-	-	-	-
C5.21	27		ELBOW-TO-PIPE	AUG	-	-	-	-	-	-	-
2	HPSI			OWN	-	-	-	-	-	-	-
				PRE	-	-	-	-	-	-	-
C-F-1	I163890	ISI/PT/PT-106	B-42	ISI	-	-	-	s	-	-	-
C5.21	28	ISI/UT/UT-208	PIPE-TO-ELBOW	AUG	-	-	-	-	-	-	-
2	HPSI			OWN	-	-	-	-	-	-	-
				PRE	-	-	-	-	-	-	-
C-F-1	I163910		B-42	ISI	-	-	-	-	-	-	-
C5.21	29		ELBOW-TO-PIPE	AUG	-	-	-	-	-	-	-
2	HPSI			OWN	-	-	-	-	-	-	-
				PRE	-	-	-	-	-	-	-
C-F-1	I163920		B-42	ISI	-	-	-	-	-	-	-
C5.21	30		PIPE-TO-ELBOW	AUG	-	-	-	-	-	-	-
2	HPSI			OWN	-	-	-	-	-	-	-
				PRE	-	-	-	-	-	-	-
C-F-1	I163930		B-42	ISI	-	-	-	-	-	-	-
C5.21	31		ELBOW-TO-PEN 101 (OUTCV)	AUG	-	-	-	-	-	-	-
2	HPSI			OWN	-	-	-	-	-	-	-
				PRE	-	-	-	-	-	-	-
C-F-1	I163940		B-43	ISI	-	-	-	-	-	-	-
C5.21	32		PEN(101)-TO-ELBOW (INCV)	AUG	-	-	-	-	-	-	-
2	HPSI			OWN	-	-	-	-	-	-	-
				PRE	-	-	-	-	-	-	-
C-F-1	I163950		B-43	ISI	-	-	-	-	-	-	-
C5.21	33		ELBOW-TO-PIPE	AUG	-	-	-	-	-	-	-
2	HPSI			OWN	-	-	-	-	-	-	-
				PRE	-	-	-	-	-	-	-

Category, ItemNO, Class	Summary / CompID / System	Scope / Method / Procedure	Iso No. Comp. Desc. Code Case		Period 1 00	Period 1 02	Period 2 03	Period 2 05	Period 2 06	Period 3 08	Period 3 09
C-F-1	I163960		B-43	ISI	-	-	-	-	-	-	-
C5.21	34		PIPE-TO-ELBOW	AUG	-	-	-	-	-	-	-
2	HPSI			OWN	-	-	-	-	-	-	-
				PRE	-	-	-	-	-	-	-
C-F-1	I163970		B-43	ISI	-	-	-	-	-	-	-
C5.21	35		ELBOW-TO-PIPE	AUG	-	-	-	-	-	-	-
2	HPSI			OWN	-	-	-	-	-	-	-
				PRE	-	-	-	-	-	-	-
C-F-1	I163990		B-43	ISI	-	-	-	-	-	-	-
C5.21	37		PIPE-TO-ELBOW	AUG	-	-	-	-	-	-	-
2	HPSI			OWN	-	-	-	-	-	-	-
				PRE	-	-	-	-	-	-	-
C-F-1	I164000	ISI/PT/PT-106	B-43	ISI	-	-	-	-	s	-	-
C5.21	38	ISI/UT/UT-208	ELBOW-TO-PIPE	AUG	-	-	-	-	-	-	-
2	HPSI			OWN	-	-	-	-	-	-	-
				PRE	-	-	-	-	-	-	-
C-F-1	I164003		B-43	ISI	-	-	-	-	-	-	-
C5.21	38A		PIPE-TO-ELBOW	AUG	-	-	-	-	-	-	-
2	HPSI			OWN	-	-	-	-	-	-	-
				PRE	-	-	-	-	-	-	-
C-F-1	I164004		B-43	ISI	-	-	-	-	-	-	-
C5.21	38B		ELBOW-TO-PIPE	AUG	-	-	-	-	-	-	-
2	HPSI			OWN	-	-	-	-	-	-	-
				PRE	-	-	-	-	-	-	-
C-F-1	I164005		B-43	ISI	-	-	-	-	-	-	-
C5.21	38C		PIPE-TO-ELBOW	AUG	-	-	-	-	-	-	-
2	HPSI			OWN	-	-	-	-	-	-	-
				PRE	-	-	-	-	-	-	-
C-F-1	I164006		B-43	ISI	-	-	-	-	-	-	-
C5.21	38D		ELBOW-TO-PIPE	AUG	-	-	-	-	-	-	-
2	HPSI			OWN	-	-	-	-	-	-	-
				PRE	-	-	-	-	-	-	-
C-F-1	I164010		B-43	ISI	-	-	-	-	-	-	-
C5.21	39		PIPE-TO-PIPE (FIELD WELD)	AUG	-	-	-	-	-	-	-
2	HPSI			OWN	-	-	-	-	-	-	-
				PRE	-	-	-	-	-	-	-
C-F-1	I164080		B-43	ISI	-	-	-	-	-	-	-
C5.21	40		PIPE-TO-PIPE (FIELD WELD)	AUG	-	-	-	-	-	-	-
2	HPSI			OWN	-	-	-	-	-	-	-
				PRE	-	-	-	-	-	-	-

Category, ItemNO, Class	Summary / CompID / System	Scope / Method / Procedure	Iso No. Comp. Desc. Code Case		Period 1 00	Period 1 02	Period 2 03	Period 2 05	Period 2 06	Period 3 08	Period 3 09
C-F-1	I164083		B-43	ISI	-	-	-	-	-	-	-
C5.21	40A		PIPE-TO-ELBOW	AUG	-	-	-	-	-	-	-
2	HPSI			OWN	-	-	-	-	-	-	-
				PRE	-	-	-	-	-	-	-
C-F-1	I164086		B-43	ISI	-	-	-	-	-	-	-
C5.21	40B		ELBOW-TO-PIPE	AUG	-	-	-	-	-	-	-
2	HPSI			OWN	-	-	-	-	-	-	-
				PRE	-	-	-	-	-	-	-
C-F-1	I164100		B-43	ISI	-	-	-	-	-	-	-
C5.21	41		PIPE-TO-ELBOW	AUG	-	-	-	-	-	-	-
2	HPSI			OWN	-	-	-	-	-	-	-
				PRE	-	-	-	-	-	-	-
C-F-1	I164110		B-43	ISI	-	-	-	-	-	-	-
C5.21	42		ELBOW-TO-PIPE	AUG	-	-	-	-	-	-	-
2	HPSI			OWN	-	-	-	-	-	-	-
				PRE	-	-	-	-	-	-	-
C-F-1	I164120		B-43	ISI	-	-	-	-	-	-	-
C5.21	43		PIPE-TO-ELBOW	AUG	-	-	-	-	-	-	-
2	HPSI			OWN	-	-	-	-	-	-	-
				PRE	-	-	-	-	-	-	-
C-F-1	I164130		B-43	ISI	-	-	-	-	-	-	-
C5.21	44		ELBOW-TO-PIPE	AUG	-	-	-	-	-	-	-
2	HPSI			OWN	-	-	-	-	-	-	-
				PRE	-	-	-	-	-	-	-
C-F-1	I164160		B-43	ISI	-	-	-	-	-	-	-
C5.21	45		PIPE-TO-PIPE (FIELD WELD)	AUG	-	-	-	-	-	-	-
2	HPSI			OWN	-	-	-	-	-	-	-
				PRE	-	-	-	-	-	-	-
C-F-1	I164170	ISI/PT/PT-106	B-43	ISI	-	-	-	-	-	-	s
C5.21	46	ISI/UT/UT-208	PIPE-TO-ELBOW	AUG	-	-	-	-	-	-	-
2	HPSI			OWN	-	-	-	-	-	-	-
				PRE	-	-	-	-	-	-	-
C-F-1	I164180	ISI/PT/PT-106	B-43	ISI	-	-	-	s	-	-	-
C5.21	47	ISI/UT/UT-208	ELBOW-TO-PIPE	AUG	-	-	-	-	-	-	-
2	HPSI			OWN	-	-	-	-	-	-	-
				PRE	-	-	-	-	-	-	-
C-F-1	I164220		B-43	ISI	-	-	-	-	-	-	-
C5.21	49		PIPE-TO-ELBOW	AUG	-	-	-	-	-	-	-
2	HPSI			OWN	-	-	-	-	-	-	-
				PRE	-	-	-	-	-	-	-

Category, ItemNO, Class	Summary / CompID / System	Scope / Method / Procedure	Iso No. Comp. Desc. Code Case		Period 1 00	Period 1 02	Period 2 03	Period 2 05	Period 2 06	Period 3 08	Period 3 09
C-F-1	I164230		B-43	ISI	-	-	-	-	-	-	-
C5.21	50		ELBOW-TO-PIPE	AUG	-	-	-	-	-	-	-
2	HPSI			OWN	-	-	-	-	-	-	-
				PRE	-	-	-	-	-	-	-
C-F-1	I164240	ISI/PT/PT-106	B-43	ISI	-	-	-	-	-	-	s
C5.21	51	ISI/UT/UT-208	PIPE-TO-ELBOW	AUG	-	-	-	-	-	-	-
2	HPSI			OWN	-	-	-	-	-	-	-
				PRE	-	-	-	-	-	-	-
C-F-1	I164250		B-43	ISI	-	-	-	-	-	-	-
C5.21	52		ELBOW-TO-PIPE	AUG	-	-	-	-	-	-	-
2	HPSI			OWN	-	-	-	-	-	-	-
				PRE	-	-	-	-	-	-	-
C-F-1	I164270		B-43	ISI	-	-	-	-	-	-	-
C5.21	53		PIPE-TO-FLANGE(FE-125)	AUG	-	-	-	-	-	-	-
2	HPSI			OWN	-	-	-	-	-	-	-
				PRE	-	-	-	-	-	-	-
C-F-1	I164300	ISI/PT/PT-106	B-43	ISI	c	-	-	-	-	-	-
C5.21	56	ISI/UT/UT-208	FLANGE(FE-125)-TO-PIPE	AUG	-	-	-	-	-	-	-
2	HPSI			OWN	-	-	-	-	-	-	-
				PRE	-	-	-	-	-	-	-
C-F-1	I164330		B-43	ISI	-	-	-	-	-	-	-
C5.21	57		PIPE-TO-ELBOW	AUG	-	-	-	-	-	-	-
2	HPSI			OWN	-	-	-	-	-	-	-
				PRE	-	-	-	-	-	-	-
C-F-1	I164340		B-43	ISI	-	-	-	-	-	-	-
C5.21	58		ELBOW-TO-PIPE	AUG	-	-	-	-	-	-	-
2	HPSI			OWN	-	-	-	-	-	-	-
				PRE	-	-	-	-	-	-	-
C-F-1	I164350		B-44	ISI	-	-	-	-	-	-	-
C5.21	59		PIPE-TO-TEE	AUG	-	-	-	-	-	-	-
2	HPSI			OWN	-	-	-	-	-	-	-
				PRE	-	-	-	-	-	-	-
C-F-1	I164360	ISI/PT/PT-106	B-44	ISI	-	-	-	-	s	-	-
C5.21	60	ISI/UT/UT-208	TEE-TO-REDUCER	AUG	-	-	-	-	-	-	-
2	HPSI			OWN	-	-	-	-	-	-	-
				PRE	-	-	-	-	-	-	-
C-F-1	I161700	ISI/PT/PT-106	B-39	ISI	c	-	-	-	-	-	-
C5.30	1		REDUCER-TO-PIPE	AUG	-	-	-	-	-	-	-
2	HPSI			OWN	-	-	-	-	-	-	-
				PRE	-	-	-	-	-	-	-

Category, ItemNO, Class	Summary / CompID / System	Scope / Method / Procedure	Iso No. Comp. Desc. Code Case		Period 1 00	Period 1 02	Period 2 03	Period 2 05	Period 2 06	Period 3 08	Period 3 09
C-F-1	I161710		B-39	ISI	-	-	-	-	-	-	-
C5.30	2		ELBOW-TO-VALVE(878B)	AUG	-	-	-	-	-	-	-
2	HPSI			OWN	-	-	-	-	-	-	-
				PRE	-	-	-	-	-	-	-
C-F-1	I161720		B-39	ISI	-	-	-	-	-	-	-
C5.30	3		VALVE 878B TO PIPE	AUG	-	-	-	-	-	-	-
2	HPSI			OWN	-	-	-	-	-	-	-
				PRE	-	-	-	-	-	-	-
C-F-1	I161730	ISI/PT/PT-106	B-39	ISI	-	-	-	-	-	s	-
C5.30	4		PIPE-TO-ELBOW	AUG	-	-	-	-	-	-	-
2	HPSI			OWN	-	-	-	-	-	-	-
				PRE	-	-	-	-	-	-	-
C-F-1	I161740		B-39	ISI	-	-	-	-	-	-	-
C5.30	5		ELBOW-TO-PIPE	AUG	-	-	-	-	-	-	-
2	HPSI			OWN	-	-	-	-	-	-	-
				PRE	-	-	-	-	-	-	-
C-F-1	I161760	ISI/PT/PT-106	B-39	ISI	-	-	-	-	s	-	-
C5.30	6		PIPE-TO-TEE	AUG	-	-	-	-	-	-	-
2	HPSI			OWN	-	-	-	-	-	-	-
				PRE	-	-	-	-	-	-	-
C-F-1	I161780		B-39	ISI	-	-	-	-	-	-	-
C5.30	8		TEE-TO-PIPE	AUG	-	-	-	-	-	-	-
2	HPSI			OWN	-	-	-	-	-	-	-
				PRE	-	-	-	-	-	-	-
C-F-1	I161790		B-39	ISI	-	-	-	-	-	-	-
C5.30	9		PIPE-TO-ELBOW	AUG	-	-	-	-	-	-	-
2	HPSI			OWN	-	-	-	-	-	-	-
				PRE	-	-	-	-	-	-	-
C-F-1	I161800		B-39	ISI	-	-	-	-	-	-	-
C5.30	10		ELBOW-TO-PIPE	AUG	-	-	-	-	-	-	-
2	HPSI			OWN	-	-	-	-	-	-	-
				PRE	-	-	-	-	-	-	-
C-F-1	I161810		B-39	ISI	-	-	-	-	-	-	-
C5.30	11		PIPE-TO-ELBOW	AUG	-	-	-	-	-	-	-
2	HPSI			OWN	-	-	-	-	-	-	-
				PRE	-	-	-	-	-	-	-
C-F-1	I161820		B-39	ISI	-	-	-	-	-	-	-
C5.30	12		ELBOW-TO-PIPE	AUG	-	-	-	-	-	-	-
2	HPSI			OWN	-	-	-	-	-	-	-
				PRE	-	-	-	-	-	-	-

Category, ItemNO, Class	Summary / CompID / System	Scope / Method / Procedure	Iso No. Comp. Desc. Code Case		Period 1 00	Period 1 02	Period 2 03	Period 2 05	Period 2 06	Period 3 08	Period 3 09
C-F-1	I161840		B-39	ISI	-	-	-	-	-	-	-
C5.30	13		PIPE-TO-ELBOW	AUG	-	-	-	-	-	-	-
2	HPSI			OWN	-	-	-	-	-	-	-
				PRE	-	-	-	-	-	-	-
C-F-1	I161850	ISI/PT/PT-106	B-39	ISI	-	c	-	-	-	-	-
C5.30	14	ISI/PT/PT-106	ELBOW-TO-PIPE	AUG	-	-	-	-	-	-	-
2	HPSI			OWN	-	-	-	-	-	-	-
				PRE	-	-	-	-	-	-	-
C-F-1	I161870		B-39	ISI	-	-	-	-	-	-	-
C5.30	15		PIPE-TO-ELBOW	AUG	-	-	-	-	-	-	-
2	HPSI			OWN	-	-	-	-	-	-	-
				PRE	-	-	-	-	-	-	-
C-F-1	I161880	ISI/PT/PT-106	B-39	ISI	-	-	c	-	-	-	-
C5.30	16		ELBOW-TO-PIPE	AUG	-	-	-	-	-	-	-
2	HPSI			OWN	-	-	-	-	-	-	-
				PRE	-	-	-	-	-	-	-
C-F-1	I161904	PSI/PT/PT-106	B-39	ISI	-	-	-	-	-	-	-
C5.30	16A		PIPE-TO-COUPLING	AUG	-	-	-	-	-	-	-
2	HPSI			OWN	-	-	-	-	-	-	-
				PRE	-	c	-	-	-	-	-
C-F-1	I161908	PSI/PT/PT-106	B-39	ISI	-	-	-	-	-	-	-
C5.30	16B		COUPLING-TO-PIPE	AUG	-	-	-	-	-	-	-
2	HPSI			OWN	-	-	-	-	-	-	-
				PRE	-	c	-	-	-	-	-
C-F-1	I161910	PSI/PT/PT-106	B-39	ISI	-	-	-	-	-	-	-
C5.30	17		PIPE-TO-VALVE(878G)	AUG	-	-	-	-	-	-	-
2	HPSI			OWN	-	-	-	-	-	-	-
				PRE	-	c	-	-	-	-	-
C-F-1	I162000		B-39	ISI	-	-	-	-	-	-	-
C5.30	20		REDUCING TEE-TO-PIPE	AUG	-	-	-	-	-	-	-
2	HPSI			OWN	-	-	-	-	-	-	-
				PRE	-	-	-	-	-	-	-
C-F-1	I162010		B-39	ISI	-	-	-	-	-	-	-
C5.30	21		PIPE-TO-ELBOW	AUG	-	-	-	-	-	-	-
2	HPSI			OWN	-	-	-	-	-	-	-
				PRE	-	-	-	-	-	-	-
C-F-1	I162020		B-39	ISI	-	-	-	-	-	-	-
C5.30	22		ELBOW-TO-PIPE	AUG	-	-	-	-	-	-	-
2	HPSI			OWN	-	-	-	-	-	-	-
				PRE	-	-	-	-	-	-	-

Category, ItemNO, Class	Summary / CompID / System	Scope / Method / Procedure	Iso No. Comp. Desc. Code Case		Period 1 00	Period 1 02	Period 2 03	Period 2 05	Period 2 06	Period 3 08	Period 3 09
C-F-1	I162030	ISI/PT/PT-106	B-39	ISI	-	-	c	-	-	-	-
C5.30	23		PIPE-TO-VALVE(878A)	AUG	-	-	-	-	-	-	-
2	HPSI			OWN	-	-	-	-	-	-	-
				PRE	-	-	-	-	-	-	-
C-F-1	I162040		B-39	ISI	-	-	-	-	-	-	-
C5.30	24		VALVE 878A TO PIPE	AUG	-	-	-	-	-	-	-
2	HPSI			OWN	-	-	-	-	-	-	-
				PRE	-	-	-	-	-	-	-
C-F-1	I162050		B-39	ISI	-	-	-	-	-	-	-
C5.30	25		PIPE-TO-ELBOW	AUG	-	-	-	-	-	-	-
2	HPSI			OWN	-	-	-	-	-	-	-
				PRE	-	-	-	-	-	-	-
C-F-1	I162060	ISI/PT/PT-106	B-39	ISI	-	-	-	-	-	-	s
C5.30	26		ELBOW-TO-PIPE	AUG	-	-	-	-	-	-	-
2	HPSI			OWN	-	-	-	-	-	-	-
				PRE	-	-	-	-	-	-	-
C-F-1	I162080		B-39	ISI	-	-	-	-	-	-	-
C5.30	27		PIPE-TO-TEE	AUG	-	-	-	-	-	-	-
2	HPSI			OWN	-	-	-	-	-	-	-
				PRE	-	-	-	-	-	-	-
C-F-1	I162090	ISI/PT/PT-106	B-39	ISI	c	-	-	-	-	-	-
C5.30	28		TEE-TO-REDUCER	AUG	-	-	-	-	-	-	-
2	HPSI			OWN	-	-	-	-	-	-	-
				PRE	-	-	-	-	-	-	-
C-F-1	I162100		B-39	ISI	-	-	-	-	-	-	-
C5.30	29		TEE-TO-PIPE	AUG	-	-	-	-	-	-	-
2	HPSI			OWN	-	-	-	-	-	-	-
				PRE	-	-	-	-	-	-	-
C-F-1	I162110		B-39	ISI	-	-	-	-	-	-	-
C5.30	30		PIPE-TO-ELBOW	AUG	-	-	-	-	-	-	-
2	HPSI			OWN	-	-	-	-	-	-	-
				PRE	-	-	-	-	-	-	-
C-F-1	I162120		B-39	ISI	-	-	-	-	-	-	-
C5.30	31		ELBOW-TO-PIPE	AUG	-	-	-	-	-	-	-
2	HPSI			OWN	-	-	-	-	-	-	-
				PRE	-	-	-	-	-	-	-
C-F-1	I162130		B-39	ISI	-	-	-	-	-	-	-
C5.30	32		PIPE-TO-ELBOW	AUG	-	-	-	-	-	-	-
2	HPSI			OWN	-	-	-	-	-	-	-
				PRE	-	-	-	-	-	-	-

Category, ItemNO, Class	Summary / CompID / System	Scope / Method / Procedure	Iso No. Comp. Desc. Code Case		Period 1 00	Period 1 02	Period 2 03	Period 2 05	Period 2 06	Period 3 08	Period 3 09
C-F-1	I162140		B-39	ISI	-	-	-	-	-	-	-
C5.30	33		ELBOW-TO-PIPE	AUG	-	-	-	-	-	-	-
2	HPSI			OWN	-	-	-	-	-	-	-
				PRE	-	-	-	-	-	-	-
C-F-1	I162150		B-39	ISI	-	-	-	-	-	-	-
C5.30	34		PIPE-TO-ELBOW	AUG	-	-	-	-	-	-	-
2	HPSI			OWN	-	-	-	-	-	-	-
				PRE	-	-	-	-	-	-	-
C-F-1	I162160	ISI/PT/PT-106	B-39	ISI	-	c	-	-	-	-	-
C5.30	35		ELBOW-TO-PIPE	AUG	-	-	-	-	-	-	-
2	HPSI			OWN	-	-	-	-	-	-	-
				PRE	-	-	-	-	-	-	-
C-F-1	I162190		B-39	ISI	-	-	-	-	-	-	-
C5.30	36		PIPE-TO-COUPLING	AUG	-	-	-	-	-	-	-
2	HPSI			OWN	-	-	-	-	-	-	-
				PRE	-	-	-	-	-	-	-
C-F-1	I162200		B-39	ISI	-	-	-	-	-	-	-
C5.30	37		COUPLING-TO-PIPE	AUG	-	-	-	-	-	-	-
2	HPSI			OWN	-	-	-	-	-	-	-
				PRE	-	-	-	-	-	-	-
C-F-1	I162220	ISI/PT/PT-106	B-39	ISI	-	-	-	-	s	-	-
C5.30	38		PIPE-TO-VALVE(878F)	AUG	-	-	-	-	-	-	-
2	HPSI			OWN	-	-	-	-	-	-	-
				PRE	-	-	-	-	-	-	-
C-F-1	I164500	ISI/PT/PT-106	B-44	ISI	-	c	-	-	-	-	-
C5.30	1		TEE-TO-PIPE	AUG	-	-	-	-	-	-	-
2	HPSI			OWN	-	-	-	-	-	-	-
				PRE	-	-	-	-	-	-	-
C-F-1	I164510		B-44	ISI	-	-	-	-	-	-	-
C5.30	2		PIPE-TO-ELBOW	AUG	-	-	-	-	-	-	-
2	HPSI			OWN	-	-	-	-	-	-	-
				PRE	-	-	-	-	-	-	-
C-F-1	I164520		B-44	ISI	-	-	-	-	-	-	-
C5.30	3		ELBOW-TO-PIPE	AUG	-	-	-	-	-	-	-
2	HPSI			OWN	-	-	-	-	-	-	-
				PRE	-	-	-	-	-	-	-
C-F-1	I164530		B-44	ISI	-	-	-	-	-	-	-
C5.30	4		PIPE-TO-ELBOW	AUG	-	-	-	-	-	-	-
2	HPSI			OWN	-	-	-	-	-	-	-
				PRE	-	-	-	-	-	-	-

Category, ItemNO, Class	Summary / CompID / System	Scope / Method / Procedure	Iso No. Comp. Desc. Code Case		Period 1 00	Period 1 02	Period 2 03	Period 2 05	Period 2 06	Period 3 08	Period 3 09
C-F-1	I164540		B-44	ISI	-	-	-	-	-	-	-
C5.30	5		ELBOW-TO-PIPE	AUG	-	-	-	-	-	-	-
2	HPSI			OWN	-	-	-	-	-	-	-
				PRE	-	-	-	-	-	-	-
C-F-1	I164550	ISI/PT/PT-106	B-44	ISI	-	-	c	-	-	-	-
C5.30	6		PIPE-TO-VALVE(878C)	AUG	-	-	-	-	-	-	-
2	HPSI			OWN	-	-	-	-	-	-	-
				PRE	-	-	-	-	-	-	-
C-F-1	I164560		B-44	ISI	-	-	-	-	-	-	-
C5.30	7		VALVE 878C TO ELBOW	AUG	-	-	-	-	-	-	-
2	HPSI			OWN	-	-	-	-	-	-	-
				PRE	-	-	-	-	-	-	-
C-F-1	I164570	ISI/PT/PT-106	B-44	ISI	-	-	-	-	-	-	s
C5.30	8		ELBOW-TO-PIPE	AUG	-	-	-	-	-	-	-
2	HPSI			OWN	-	-	-	-	-	-	-
				PRE	-	-	-	-	-	-	-
C-F-1	I164600	ISI/PT/PT-106	B-44	ISI	-	c	-	-	-	-	-
C5.30	10		PIPE-TO-TEE	AUG	-	-	-	-	-	-	-
2	HPSI			OWN	-	-	-	-	-	-	-
				PRE	-	-	-	-	-	-	-
C-F-1	I164610		B-44	ISI	-	-	-	-	-	-	-
C5.30	11		TEE-TO-REDUCER	AUG	-	-	-	-	-	-	-
2	HPSI			OWN	-	-	-	-	-	-	-
				PRE	-	-	-	-	-	-	-
C-F-1	I164620		B-44	ISI	-	-	-	-	-	-	-
C5.30	12		TEE-TO-PIPE	AUG	-	-	-	-	-	-	-
2	HPSI			OWN	-	-	-	-	-	-	-
				PRE	-	-	-	-	-	-	-
C-F-1	I164630		B-44	ISI	-	-	-	-	-	-	-
C5.30	13		PIPE-TO-ELBOW	AUG	-	-	-	-	-	-	-
2	HPSI			OWN	-	-	-	-	-	-	-
				PRE	-	-	-	-	-	-	-
C-F-1	I164640		B-44	ISI	-	-	-	-	-	-	-
C5.30	14		ELBOW-TO-PIPE	AUG	-	-	-	-	-	-	-
2	HPSI			OWN	-	-	-	-	-	-	-
				PRE	-	-	-	-	-	-	-
C-F-1	I164650		B-44	ISI	-	-	-	-	-	-	-
C5.30	15		PIPE-TO-ELBOW	AUG	-	-	-	-	-	-	-
2	HPSI			OWN	-	-	-	-	-	-	-
				PRE	-	-	-	-	-	-	-

Category, ItemNO, Class	Summary / CompID / System	Scope / Method / Procedure	Iso No. Comp. Desc. Code Case		Period 1 00	Period 1 02	Period 2 03	Period 2 05	Period 2 06	Period 3 08	Period 3 09
C-F-1	I164660		B-44	ISI	-	-	-	-	-	-	-
C5.30	16		ELBOW-TO-PIPE	AUG	-	-	-	-	-	-	-
2	HPSI			OWN	-	-	-	-	-	-	-
				PRE	-	-	-	-	-	-	-
C-F-1	I164680		B-44	ISI	-	-	-	-	-	-	-
C5.30	17		PIPE-TO-ELBOW	AUG	-	-	-	-	-	-	-
2	HPSI			OWN	-	-	-	-	-	-	-
				PRE	-	-	-	-	-	-	-
C-F-1	I164690		B-44	ISI	-	-	-	-	-	-	-
C5.30	18		ELBOW-TO-PIPE	AUG	-	-	-	-	-	-	-
2	HPSI			OWN	-	-	-	-	-	-	-
				PRE	-	-	-	-	-	-	-
C-F-1	I164700	ISI/PT/PT-106	B-44	ISI	c	-	-	-	-	-	-
C5.30	19		PIPE-TO-VALVE(878H)	AUG	-	-	-	-	-	-	-
2	HPSI			OWN	-	-	-	-	-	-	-
				PRE	-	-	-	-	-	-	-
C-F-1	I164800	ISI/PT/PT-106	B-45	ISI	c	-	-	-	-	-	-
C5.30	1		REDUCER-TO-PIPE	AUG	-	-	-	-	-	-	-
2	HPSI			OWN	-	-	-	-	-	-	-
				PRE	-	-	-	-	-	-	-
C-F-1	I164810		B-45	ISI	-	-	-	-	-	-	-
C5.30	2		PIPE-TO-ELBOW	AUG	-	-	-	-	-	-	-
2	HPSI			OWN	-	-	-	-	-	-	-
				PRE	-	-	-	-	-	-	-
C-F-1	I164820		B-45	ISI	-	-	-	-	-	-	-
C5.30	3		ELBOW-TO-PIPE	AUG	-	-	-	-	-	-	-
2	HPSI			OWN	-	-	-	-	-	-	-
				PRE	-	-	-	-	-	-	-
C-F-1	I164830		B-45	ISI	-	-	-	-	-	-	-
C5.30	4		PIPE-TO-VALVE(878D)	AUG	-	-	-	-	-	-	-
2	HPSI			OWN	-	-	-	-	-	-	-
				PRE	-	-	-	-	-	-	-
C-F-1	I164840		B-45	ISI	-	-	-	-	-	-	-
C5.30	5		VALVE 878D TO PIPE	AUG	-	-	-	-	-	-	-
2	HPSI			OWN	-	-	-	-	-	-	-
				PRE	-	-	-	-	-	-	-
C-F-1	I164850		B-45	ISI	-	-	-	-	-	-	-
C5.30	6		PIPE-TO-ELBOW	AUG	-	-	-	-	-	-	-
2	HPSI			OWN	-	-	-	-	-	-	-
				PRE	-	-	-	-	-	-	-

Category, ItemNO, Class	Summary / CompID / System	Scope / Method / Procedure	Iso No. Comp. Desc. Code Case		Period 1 00	Period 1 02	Period 2 03	Period 2 05	Period 2 06	Period 3 08	Period 3 09
C-F-1	I164860		B-45	ISI	-	-	-	-	-	-	-
C5.30	7		ELBOW-TO-PIPE	AUG	-	-	-	-	-	-	-
2	HPSI			OWN	-	-	-	-	-	-	-
				PRE	-	-	-	-	-	-	-
C-F-1	I164880	ISI/PT/PT-106	B-45	ISI	-	-	c	-	-	-	-
C5.30	8		PIPE-TO-TEE	AUG	-	-	-	-	-	-	-
2	HPSI			OWN	-	-	-	-	-	-	-
				PRE	-	-	-	-	-	-	-
C-F-1	I164890	ISI/PT/PT-106	B-45	ISI	-	-	c	-	-	-	-
C5.30	9		TEE-TO-REDUCER	AUG	-	-	-	-	-	-	-
2	HPSI			OWN	-	-	-	-	-	-	-
				PRE	-	-	-	-	-	-	-
C-F-1	I164900		B-45	ISI	-	-	-	-	-	-	-
C5.30	10		TEE-TO-PIPE	AUG	-	-	-	-	-	-	-
2	HPSI			OWN	-	-	-	-	-	-	-
				PRE	-	-	-	-	-	-	-
C-F-1	I164910		B-45	ISI	-	-	-	-	-	-	-
C5.30	11		PIPE-TO-ELBOW	AUG	-	-	-	-	-	-	-
2	HPSI			OWN	-	-	-	-	-	-	-
				PRE	-	-	-	-	-	-	-
C-F-1	I164920		B-45	ISI	-	-	-	-	-	-	-
C5.30	12		ELBOW-TO-PIPE	AUG	-	-	-	-	-	-	-
2	HPSI			OWN	-	-	-	-	-	-	-
				PRE	-	-	-	-	-	-	-
C-F-1	I164930		B-45	ISI	-	-	-	-	-	-	-
C5.30	13		PIPE-TO-ELBOW	AUG	-	-	-	-	-	-	-
2	HPSI			OWN	-	-	-	-	-	-	-
				PRE	-	-	-	-	-	-	-
C-F-1	I164940		B-45	ISI	-	-	-	-	-	-	-
C5.30	14		ELBOW-TO-PIPE	AUG	-	-	-	-	-	-	-
2	HPSI			OWN	-	-	-	-	-	-	-
				PRE	-	-	-	-	-	-	-
C-F-1	I164950	ISI/PT/PT-106	B-45	ISI	-	-	-	-	-	s	-
C5.30	15		PIPE-TO-ELBOW	AUG	-	-	-	-	-	-	-
2	HPSI			OWN	-	-	-	-	-	-	-
				PRE	-	-	-	-	-	-	-
C-F-1	I164960	ISI/PT/PT-106	B-45	ISI	-	-	-	-	-	s	-
C5.30	16		ELBOW-TO-PIPE	AUG	-	-	-	-	-	-	-
2	HPSI			OWN	-	-	-	-	-	-	-
				PRE	-	-	-	-	-	-	-

Category, ItemNO, Class	Summary / CompID / System	Scope / Method / Procedure	Iso No. Comp. Desc. Code Case		Period 1 00	Period 1 02	Period 2 03	Period 2 05	Period 2 06	Period 3 08	Period 3 09
C-F-1	I164970		B-45	ISI	-	-	-	-	-	-	-
C5.30	17		PIPE-TO-ELBOW	AUG	-	-	-	-	-	-	-
2	HPSI			OWN	-	-	-	-	-	-	-
				PRE	-	-	-	-	-	-	-
C-F-1	I164980		B-45	ISI	-	-	-	-	-	-	-
C5.30	18		ELBOW-TO-PIPE	AUG	-	-	-	-	-	-	-
2	HPSI			OWN	-	-	-	-	-	-	-
				PRE	-	-	-	-	-	-	-
C-F-1	I164990		B-45	ISI	-	-	-	-	-	-	-
C5.30	19		PIPE-TO-VALVE(878E)	AUG	-	-	-	-	-	-	-
2	HPSI			OWN	-	-	-	-	-	-	-
				PRE	-	-	-	-	-	-	-
C-F-1	I165000	PSI/PT/PT-106	B-45	ISI	-	-	-	-	-	-	-
C5.30	20		VALVE 878E TO PIPE	AUG	-	-	-	-	-	-	-
2	HPSI			OWN	-	-	-	-	-	-	-
				PRE	-	c	-	-	-	-	-
C-F-1	I165010	PSI/PT/PT-106	B-45	ISI	-	-	-	-	-	-	-
C5.30	21		PIPE-TO-VALVE(878J)	AUG	-	-	-	-	-	-	-
2	HPSI			OWN	-	-	-	-	-	-	-
				PRE	-	c	-	-	-	-	-
C-F-1	I165100		B-54	ISI	-	-	-	-	-	-	-
C5.30	1		REDUCER-TO-TEE	AUG	-	-	-	-	-	-	-
2	HPSI			OWN	-	-	-	-	-	-	-
				PRE	-	-	-	-	-	-	-
C-F-1	I165110		B-54	ISI	-	-	-	-	-	-	-
C5.30	2		TEE-TO-REDUCER	AUG	-	-	-	-	-	-	-
2	HPSI			OWN	-	-	-	-	-	-	-
				PRE	-	-	-	-	-	-	-
C-F-1	I165120		B-54	ISI	-	-	-	-	-	-	-
C5.30	3		TEE-TO-PIPE	AUG	-	-	-	-	-	-	-
2	HPSI			OWN	-	-	-	-	-	-	-
				PRE	-	-	-	-	-	-	-
C-F-1	I165130		B-54	ISI	-	-	-	-	-	-	-
C5.30	4		PIPE-TO-TEE	AUG	-	-	-	-	-	-	-
2	HPSI			OWN	-	-	-	-	-	-	-
				PRE	-	-	-	-	-	-	-
C-F-1	I165140		B-54	ISI	-	-	-	-	-	-	-
C5.30	5		TEE-TO-REDUCER	AUG	-	-	-	-	-	-	-
2	HPSI			OWN	-	-	-	-	-	-	-
				PRE	-	-	-	-	-	-	-

Category, ItemNO, Class	Summary / CompID / System	Scope / Method / Procedure	Iso No. Comp. Desc. Code Case		Period 1 00	Period 1 02	Period 2 03	Period 2 05	Period 2 06	Period 3 08	Period 3 09
C-F-1	I165150		B-54	ISI	-	-	-	-	-	-	-
C5.30	6		TEE-TO-PIPE	AUG	-	-	-	-	-	-	-
2	HPSI			OWN	-	-	-	-	-	-	-
				PRE	-	-	-	-	-	-	-
C-F-1	I165160		B-54	ISI	-	-	-	-	-	-	-
C5.30	7		PIPE-TO-ELBOW	AUG	-	-	-	-	-	-	-
2	HPSI			OWN	-	-	-	-	-	-	-
				PRE	-	-	-	-	-	-	-
C-F-1	I165170		B-54	ISI	-	-	-	-	-	-	-
C5.30	8		ELBOW-TO-PIPE	AUG	-	-	-	-	-	-	-
2	HPSI			OWN	-	-	-	-	-	-	-
				PRE	-	-	-	-	-	-	-
C-F-1	I165180		B-54	ISI	-	-	-	-	-	-	-
C5.30	9		PIPE-TO-ELBOW	AUG	-	-	-	-	-	-	-
2	HPSI			OWN	-	-	-	-	-	-	-
				PRE	-	-	-	-	-	-	-
C-F-1	I165190		B-54	ISI	-	-	-	-	-	-	-
C5.30	10		ELBOW-TO-PIPE	AUG	-	-	-	-	-	-	-
2	HPSI			OWN	-	-	-	-	-	-	-
				PRE	-	-	-	-	-	-	-
C-F-1	I165194	PSI/PT/PT-106	B-54	ISI	-	-	-	-	-	-	-
C5.30	10A		PIPE-TO-VALVE(898B)	AUG	-	-	-	-	-	-	-
2	HPSI			OWN	-	-	-	-	-	-	-
				PRE	c	-	-	-	-	-	-
C-F-1	I165196	PSI/PT/PT-106	B-54	ISI	-	-	-	-	-	-	-
C5.30	10B		VALVE(898B)-TO-PIPE	AUG	-	-	-	-	-	-	-
2	HPSI			OWN	-	-	-	-	-	-	-
				PRE	c	-	-	-	-	-	-
C-F-1	I165200	PSI/PT/PT-106	B-54	ISI	-	-	-	-	-	-	-
C5.30	11		PIPE-TO-ELBOW	AUG	-	-	-	-	-	-	-
2	HPSI			OWN	-	-	-	-	-	-	-
				PRE	c	-	-	-	-	-	-
C-F-1	I165210		B-54	ISI	-	-	-	-	-	-	-
C5.30	12		ELBOW-TO-PIPE	AUG	-	-	-	-	-	-	-
2	HPSI			OWN	-	-	-	-	-	-	-
				PRE	-	-	-	-	-	-	-
C-F-1	I165220		B-54	ISI	-	-	-	-	-	-	-
C5.30	13		PIPE-TO-ELBOW	AUG	-	-	-	-	-	-	-
2	HPSI			OWN	-	-	-	-	-	-	-
				PRE	-	-	-	-	-	-	-

Category, ItemNO, Class	Summary / CompID / System	Scope / Method / Procedure	Iso No. Comp. Desc. Code Case		Period 1 00	Period 1 02	Period 2 03	Period 2 05	Period 2 06	Period 3 08	Period 3 09
C-F-1	I165230		B-54	ISI	-	-	-	-	-	-	-
C5.30	14		ELBOW-TO-PIPE	AUG	-	-	-	-	-	-	-
2	HPSI			OWN	-	-	-	-	-	-	-
				PRE	-	-	-	-	-	-	-
C-F-1	I165240		B-54	ISI	-	-	-	-	-	-	-
C5.30	15		PIPE-TO-ELBOW	AUG	-	-	-	-	-	-	-
2	HPSI			OWN	-	-	-	-	-	-	-
				PRE	-	-	-	-	-	-	-
C-F-1	I165250		B-54	ISI	-	-	-	-	-	-	-
C5.30	16		ELBOW-TO-PIPE	AUG	-	-	-	-	-	-	-
2	HPSI			OWN	-	-	-	-	-	-	-
				PRE	-	-	-	-	-	-	-
C-F-1	I165260		B-54	ISI	-	-	-	-	-	-	-
C5.30	17		PIPE-TO-ELBOW	AUG	-	-	-	-	-	-	-
2	HPSI			OWN	-	-	-	-	-	-	-
				PRE	-	-	-	-	-	-	-
C-F-1	I165270		B-54	ISI	-	-	-	-	-	-	-
C5.30	18		ELBOW-TO-PIPE	AUG	-	-	-	-	-	-	-
2	HPSI			OWN	-	-	-	-	-	-	-
				PRE	-	-	-	-	-	-	-
C-F-1	I165280		B-54	ISI	-	-	-	-	-	-	-
C5.30	19		PIPE-TO-TEE	AUG	-	-	-	-	-	-	-
2	HPSI			OWN	-	-	-	-	-	-	-
				PRE	-	-	-	-	-	-	-
C-F-1	I165290		B-54	ISI	-	-	-	-	-	-	-
C5.30	19A		TEE-TO-REDUCER	AUG	-	-	-	-	-	-	-
2	HPSI			OWN	-	-	-	-	-	-	-
				PRE	-	-	-	-	-	-	-
C-F-1	I165300		B-54	ISI	-	-	-	-	-	-	-
C5.30	20		TEE-TO-PIPE	AUG	-	-	-	-	-	-	-
2	HPSI			OWN	-	-	-	-	-	-	-
				PRE	-	-	-	-	-	-	-
C-F-1	I165320		B-54	ISI	-	-	-	-	-	-	-
C5.30	21		PIPE-TO-VALVE(898)	AUG	-	-	-	-	-	-	-
2	HPSI			OWN	-	-	-	-	-	-	-
				PRE	-	-	-	-	-	-	-
C-F-1	I165330		B-54	ISI	-	-	-	-	-	-	-
C5.30	22		VALVE 898 TO PIPE	AUG	-	-	-	-	-	-	-
2	HPSI			OWN	-	-	-	-	-	-	-
				PRE	-	-	-	-	-	-	-

Category, ItemNO, Class	Summary / CompID / System	Scope / Method / Procedure	Iso No. Comp. Desc. Code Case		Period 1 00	Period 1 02	Period 2 03	Period 2 05	Period 2 06	Period 3 08	Period 3 09
C-F-1	I165340		B-54	ISI	-	-	-	-	-	-	-
C5.30	23		PIPE-TO-VALVE(897)	AUG	-	-	-	-	-	-	-
2	HPSI			OWN	-	-	-	-	-	-	-
				PRE	-	-	-	-	-	-	-
C-F-1	I075200		B-6	ISI	-	-	-	-	-	-	-
C5.41	CF-N1		BRANCH WELD	AUG	-	-	-	-	-	-	-
2	CVCS-CHRG			OWN	-	-	-	-	-	-	-
				PRE	-	-	-	-	-	-	-
C-F-1	I075300		B-6	ISI	-	-	-	-	-	-	-
C5.41	CF-N2		BRANCH WELD	AUG	-	-	-	-	-	-	-
2	CVCS-CHRG			OWN	-	-	-	-	-	-	-
				PRE	-	-	-	-	-	-	-
C-F-1	I075400	ISI/PT/PT-106	B-6	ISI	-	c	-	-	-	-	-
C5.41	CF-N3		BRANCH WELD	AUG	-	-	-	-	-	-	-
2	CVCS-CHRG			OWN	-	-	-	-	-	-	-
				PRE	-	-	-	-	-	-	-
C-F-1	I100000		B-15	ISI	-	-	-	-	-	-	-
THIN	1M		NOZZLE-TO-PIPE (BA TANK 2)	AUG	-	-	-	-	-	-	-
2	HPSI			OWN	-	-	-	-	-	-	-
				PRE	-	-	-	-	-	-	-
C-F-1	I100100		B-15	ISI	-	-	-	-	-	-	-
THIN	2M		PIPE-TO-ELBOW	AUG	-	-	-	-	-	-	-
2	HPSI			OWN	-	-	-	-	-	-	-
				PRE	-	-	-	-	-	-	-
C-F-1	I100200		B-15	ISI	-	-	-	-	-	-	-
THIN	3M		ELBOW-TO-PIPE	AUG	-	-	-	-	-	-	-
2	HPSI			OWN	-	-	-	-	-	-	-
				PRE	-	-	-	-	-	-	-
C-F-1	I100300		B-15	ISI	-	-	-	-	-	-	-
THIN	4M		PIPE-TO-PIPE	AUG	-	-	-	-	-	-	-
2	HPSI			OWN	-	-	-	-	-	-	-
				PRE	-	-	-	-	-	-	-
C-F-1	I100400		B-15	ISI	-	-	-	-	-	-	-
THIN	3R		PIPE-TO-VALVE(827B)	AUG	-	-	-	-	-	-	-
2	HPSI			OWN	-	-	-	-	-	-	-
				PRE	-	-	-	-	-	-	-
C-F-1	I100500		B-15	ISI	-	-	-	-	-	-	-
THIN	19M		VALVE(827B)-TO-PIPE	AUG	-	-	-	-	-	-	-
2	HPSI			OWN	-	-	-	-	-	-	-
				PRE	-	-	-	-	-	-	-

Category, ItemNO, Class	Summary / CompID / System	Scope / Method / Procedure	Iso No. Comp. Desc. Code Case		Period 1 00	Period 1 02	Period 2 03	Period 2 05	Period 2 06	Period 3 08	Period 3 09
C-F-1	I100600		B-15	ISI	-	-	-	-	-	-	-
THIN	20M		PIPE-TO-ELBOW	AUG	-	-	-	-	-	-	-
2	HPSI			OWN	-	-	-	-	-	-	-
				PRE	-	-	-	-	-	-	-
C-F-1	I100700		B-15	ISI	-	-	-	-	-	-	-
THIN	23AM		ELBOW-TO-PIPE	AUG	-	-	-	-	-	-	-
2	HPSI			OWN	-	-	-	-	-	-	-
				PRE	-	-	-	-	-	-	-
C-F-1	I100800		B-15	ISI	-	-	-	-	-	-	-
THIN	23MR		PIPE-TO-ELBOW	AUG	-	-	-	-	-	-	-
2	HPSI			OWN	-	-	-	-	-	-	-
				PRE	-	-	-	-	-	-	-
C-F-1	I100900		B-15	ISI	-	-	-	-	-	-	-
THIN	22MR		ELBOW-TO-PIPE	AUG	-	-	-	-	-	-	-
2	HPSI			OWN	-	-	-	-	-	-	-
				PRE	-	-	-	-	-	-	-
C-F-1	I101000		B-15	ISI	-	-	-	-	-	-	-
THIN	21M		PIPE-TO-PIPE	AUG	-	-	-	-	-	-	-
2	HPSI			OWN	-	-	-	-	-	-	-
				PRE	-	-	-	-	-	-	-
C-F-1	I101100		B-15	ISI	-	-	-	-	-	-	-
THIN	16M		PIPE-TO-ELBOW	AUG	-	-	-	-	-	-	-
2	HPSI			OWN	-	-	-	-	-	-	-
				PRE	-	-	-	-	-	-	-
C-F-1	I101200		B-15	ISI	-	-	-	-	-	-	-
THIN	15M		ELBOW-TO-PIPE	AUG	-	-	-	-	-	-	-
2	HPSI			OWN	-	-	-	-	-	-	-
				PRE	-	-	-	-	-	-	-
C-F-1	I101300		B-15	ISI	-	-	-	-	-	-	-
THIN	15AMR		PIPE-TO-TEE	AUG	-	-	-	-	-	-	-
2	HPSI			OWN	-	-	-	-	-	-	-
				PRE	-	-	-	-	-	-	-
C-F-1	I101400	OWN/PT/PT-106	B-15	ISI	-	-	-	-	-	-	-
THIN	6M	OWN/UT/UT-208	NOZZLE-TO-PIPE (BA TANK 1)	AUG	-	-	-	-	-	-	-
2	HPSI			OWN	-	-	c	-	-	-	-
				PRE	-	-	-	-	-	-	-
C-F-1	I101500		B-15	ISI	-	-	-	-	-	-	-
THIN	7M		PIPE-TO-ELBOW	AUG	-	-	-	-	-	-	-
2	HPSI			OWN	-	-	-	-	-	-	-
				PRE	-	-	-	-	-	-	-

Category, ItemNO, Class	Summary / CompID / System	Scope / Method / Procedure	Iso No. Comp. Desc. Code Case		Period 1 00	Period 1 02	Period 2 03	Period 2 05	Period 2 06	Period 3 08	Period 3 09
C-F-1	I101600		B-15	ISI	-	-	-	-	-	-	-
THIN	8M		ELBOW-TO-PIPE	AUG	-	-	-	-	-	-	-
2	HPSI			OWN	-	-	-	-	-	-	-
				PRE	-	-	-	-	-	-	-
C-F-1	I101700		B-15	ISI	-	-	-	-	-	-	-
THIN	9M		PIPE-TO-ELBOW	AUG	-	-	-	-	-	-	-
2	HPSI			OWN	-	-	-	-	-	-	-
				PRE	-	-	-	-	-	-	-
C-F-1	I101800		B-15	ISI	-	-	-	-	-	-	-
THIN	10M		ELBOW-TO-PIPE	AUG	-	-	-	-	-	-	-
2	HPSI			OWN	-	-	-	-	-	-	-
				PRE	-	-	-	-	-	-	-
C-F-1	I101900		B-15	ISI	-	-	-	-	-	-	-
THIN	11M		PIPE-TO-ELBOW	AUG	-	-	-	-	-	-	-
2	HPSI			OWN	-	-	-	-	-	-	-
				PRE	-	-	-	-	-	-	-
C-F-1	I102000		B-15	ISI	-	-	-	-	-	-	-
THIN	12M		ELBOW-TO-PIPE	AUG	-	-	-	-	-	-	-
2	HPSI			OWN	-	-	-	-	-	-	-
				PRE	-	-	-	-	-	-	-
C-F-1	I102100		B-15	ISI	-	-	-	-	-	-	-
THIN	13M		PIPE-TO-VALVE(827A)	AUG	-	-	-	-	-	-	-
2	HPSI			OWN	-	-	-	-	-	-	-
				PRE	-	-	-	-	-	-	-
C-F-1	I102200		B-15	ISI	-	-	-	-	-	-	-
THIN	14M		VALVE(827A)-TO-PIPE	AUG	-	-	-	-	-	-	-
2	HPSI			OWN	-	-	-	-	-	-	-
				PRE	-	-	-	-	-	-	-
C-F-1	I102300		B-15	ISI	-	-	-	-	-	-	-
THIN	14AM		PIPE-TO-TEE (8" WELD-O-LET)	AUG	-	-	-	-	-	-	-
2	HPSI			OWN	-	-	-	-	-	-	-
				PRE	-	-	-	-	-	-	-
C-F-1	I102400		B-15	ISI	-	-	-	-	-	-	-
THIN	24M		TEE-TO-PIPE	AUG	-	-	-	-	-	-	-
2	HPSI			OWN	-	-	-	-	-	-	-
				PRE	-	-	-	-	-	-	-
C-F-1	I102500		B-15	ISI	-	-	-	-	-	-	-
THIN	25MR		PIPE-TO-ELBOW	AUG	-	-	-	-	-	-	-
2	HPSI			OWN	-	-	-	-	-	-	-
				PRE	-	-	-	-	-	-	-

Category, ItemNO, Class	Summary / CompID / System	Scope / Method / Procedure	Iso No. Comp. Desc. Code Case		Period 1 00	Period 1 02	Period 2 03	Period 2 05	Period 2 06	Period 3 08	Period 3 09
C-F-1	I102600		B-15	ISI	-	-	-	-	-	-	-
THIN	26MR		ELBOW-TO-PIPE	AUG	-	-	-	-	-	-	-
2	HPSI			OWN	-	-	-	-	-	-	-
				PRE	-	-	-	-	-	-	-
C-F-1	I102650		B-15	ISI	-	-	-	-	-	-	-
THIN	26N		PIPE-TO-PIPE	AUG	-	-	-	-	-	-	-
2	HPSI			OWN	-	-	-	-	-	-	-
				PRE	-	-	-	-	-	-	-
C-F-1	I102700		B-15	ISI	-	-	-	-	-	-	-
THIN	27MR		PIPE-TO-ELBOW	AUG	-	-	-	-	-	-	-
2	HPSI			OWN	-	-	-	-	-	-	-
				PRE	-	-	-	-	-	-	-
C-F-1	I102800		B-15	ISI	-	-	-	-	-	-	-
THIN	28MR		ELBOW-TO-PIPE	AUG	-	-	-	-	-	-	-
2	HPSI			OWN	-	-	-	-	-	-	-
				PRE	-	-	-	-	-	-	-
C-F-1	I102820		B-16	ISI	-	-	-	-	-	-	-
THIN	29N		PIPE-TO-ELBOW	AUG	-	-	-	-	-	-	-
2	HPSI			OWN	-	-	-	-	-	-	-
				PRE	-	-	-	-	-	-	-
C-F-1	I102840		B-16	ISI	-	-	-	-	-	-	-
THIN	30N		ELBOW-TO-PIPE	AUG	-	-	-	-	-	-	-
2	HPSI			OWN	-	-	-	-	-	-	-
				PRE	-	-	-	-	-	-	-
C-F-1	I102860		B-16	ISI	-	-	-	-	-	-	-
THIN	31N		PIPE-TO-TEE	AUG	-	-	-	-	-	-	-
2	HPSI			OWN	-	-	-	-	-	-	-
				PRE	-	-	-	-	-	-	-
C-F-1	I103850	OWN/PT/PT-106	B-16	ISI	-	-	-	-	-	-	-
THIN	8N	OWN/UT/UT-208	TEE-TO-PIPE	AUG	-	-	-	-	-	-	-
2	HPSI			OWN	-	-	-	-	-	s	-
				PRE	-	-	-	-	-	-	-
C-F-1	I103900		B-16	ISI	-	-	-	-	-	-	-
THIN	4R		PIPE-TO-VALVE(826C)	AUG	-	-	-	-	-	-	-
2	HPSI			OWN	-	-	-	-	-	-	-
				PRE	-	-	-	-	-	-	-
C-F-1	I104000		B-16	ISI	-	-	-	-	-	-	-
THIN	5R		VALVE(826C)-TO-PIPE	AUG	-	-	-	-	-	-	-
2	HPSI			OWN	-	-	-	-	-	-	-
				PRE	-	-	-	-	-	-	-

Category, ItemNO, Class	Summary / CompID / System	Scope / Method / Procedure	Iso No. Comp. Desc. Code Case		Period 1 00	Period 1 02	Period 2 03	Period 2 05	Period 2 06	Period 3 08	Period 3 09
C-F-1	I104300		B-16	ISI	-	-	-	-	-	-	-
THIN	6R		PIPE-TO-VALVE(826D)	AUG	-	-	-	-	-	-	-
2	HPSI			OWN	-	-	-	-	-	-	-
				PRE	-	-	-	-	-	-	-
C-F-1	I104400		B-16	ISI	-	-	-	-	-	-	-
THIN	7RR		VALVE(826D)-TO-ELBOW	AUG	-	-	-	-	-	-	-
2	HPSI			OWN	-	-	-	-	-	-	-
				PRE	-	-	-	-	-	-	-
C-F-1	I104560		B-16	ISI	-	-	-	-	-	-	-
THIN	123		ELBOW-TO-PIPE	AUG	-	-	-	-	-	-	-
2	HPSI			OWN	-	-	-	-	-	-	-
				PRE	-	-	-	-	-	-	-
C-F-1	I104725		B-16	ISI	-	-	-	-	-	-	-
THIN	122		PIPE-TO-PIPE	AUG	-	-	-	-	-	-	-
2	HPSI			OWN	-	-	-	-	-	-	-
				PRE	-	-	-	-	-	-	-
C-F-1	I104750		B-16A	ISI	-	-	-	-	-	-	-
THIN	105N		PIPE-TO-ELBOW	AUG	-	-	-	-	-	-	-
2	HPSI			OWN	-	-	-	-	-	-	-
				PRE	-	-	-	-	-	-	-
C-F-1	I104850		B-16A	ISI	-	-	-	-	-	-	-
THIN	24N		ELBOW-TO-PIPE	AUG	-	-	-	-	-	-	-
2	HPSI			OWN	-	-	-	-	-	-	-
				PRE	-	-	-	-	-	-	-
C-F-1	I104950	OWN/PT/PT-106	B-16A	ISI	-	-	-	-	-	-	-
THIN	26N	OWN/UT/UT-208	PIPE-TO-TEE	AUG	-	-	-	-	-	-	-
2	HPSI			OWN	-	-	-	-	-	s	-
				PRE	-	-	-	-	-	-	-
C-F-1	I105050		B-16	ISI	-	-	-	-	-	-	-
THIN	7N		TEE-TO-ELBOW	AUG	-	-	-	-	-	-	-
2	HPSI			OWN	-	-	-	-	-	-	-
				PRE	-	-	-	-	-	-	-
C-F-1	I105650		B-16	ISI	-	-	-	-	-	-	-
THIN	9N		ELBOW-TO-PIPE	AUG	-	-	-	-	-	-	-
2	HPSI			OWN	-	-	-	-	-	-	-
				PRE	-	-	-	-	-	-	-
C-F-1	I105675		B-16	ISI	-	-	-	-	-	-	-
THIN	112		PIPE-TO-PIPE	AUG	-	-	-	-	-	-	-
2	HPSI			OWN	-	-	-	-	-	-	-
				PRE	-	-	-	-	-	-	-

Category, ItemNO, Class	Summary / CompID / System	Scope / Method / Procedure	Iso No. Comp. Desc. Code Case		Period 1 00	Period 1 02	Period 2 03	Period 2 05	Period 2 06	Period 3 08	Period 3 09
C-F-1	I105700		B-16	ISI	-	-	-	-	-	-	-
THIN	5R		VALVE 826B-TO-PIPE	AUG	-	-	-	-	-	-	-
2	HPSI			OWN	-	-	-	-	-	-	-
				PRE	-	-	-	-	-	-	-
C-F-1	I105800		B-16	ISI	-	-	-	-	-	-	-
THIN	6A		PIPE-TO-VALVE(826B)	AUG	-	-	-	-	-	-	-
2	HPSI			OWN	-	-	-	-	-	-	-
				PRE	-	-	-	-	-	-	-
C-F-1	I106100		B-16	ISI	-	-	-	-	-	-	-
THIN	7A		VALVE 826A-TO-PIPE	AUG	-	-	-	-	-	-	-
2	HPSI			OWN	-	-	-	-	-	-	-
				PRE	-	-	-	-	-	-	-
C-F-1	I106200		B-16	ISI	-	-	-	-	-	-	-
THIN	8R		PIPE-TO-VALVE(826A)	AUG	-	-	-	-	-	-	-
2	HPSI			OWN	-	-	-	-	-	-	-
				PRE	-	-	-	-	-	-	-
C-F-1	I106310		B-16A	ISI	-	-	-	-	-	-	-
THIN	14N		PIPE-TO-ELBOW	AUG	-	-	-	-	-	-	-
2	HPSI			OWN	-	-	-	-	-	-	-
				PRE	-	-	-	-	-	-	-
C-F-1	I106410		B-16A	ISI	-	-	-	-	-	-	-
THIN	15N		ELBOW-TO-PIPE	AUG	-	-	-	-	-	-	-
2	HPSI			OWN	-	-	-	-	-	-	-
				PRE	-	-	-	-	-	-	-
C-F-1	I106650		B-16A	ISI	-	-	-	-	-	-	-
THIN	16N		PIPE-TO-ELBOW	AUG	-	-	-	-	-	-	-
2	HPSI			OWN	-	-	-	-	-	-	-
				PRE	-	-	-	-	-	-	-
C-F-1	I106750		B-16A	ISI	-	-	-	-	-	-	-
THIN	17N		ELBOW-TO-PIPE	AUG	-	-	-	-	-	-	-
2	HPSI			OWN	-	-	-	-	-	-	-
				PRE	-	-	-	-	-	-	-
C-F-1	I107050		B-16A	ISI	-	-	-	-	-	-	-
THIN	27N		PIPE-TO-TEE	AUG	-	-	-	-	-	-	-
2	HPSI			OWN	-	-	-	-	-	-	-
				PRE	-	-	-	-	-	-	-
C-F-1	I107210		B-16A	ISI	-	-	-	-	-	-	-
THIN	25N		TEE-TO-PIPE	AUG	-	-	-	-	-	-	-
2	HPSI			OWN	-	-	-	-	-	-	-
				PRE	-	-	-	-	-	-	-

Category, ItemNO, Class	Summary / CompID / System	Scope / Method / Procedure	Iso No. Comp. Desc. Code Case		Period 1 00	Period 1 02	Period 2 03	Period 2 05	Period 2 06	Period 3 08	Period 3 09
C-F-1	I107350		B-16A	ISI	-	-	-	-	-	-	-
THIN	28N		PIPE-TO-ELBOW	AUG	-	-	-	-	-	-	-
2	HPSI			OWN	-	-	-	-	-	-	-
				PRE	-	-	-	-	-	-	-
C-F-1	I107410	OWN/PT/PT-106	B-16A	ISI	-	-	-	-	-	-	-
THIN	29N	OWN/UT/UT-208	ELBOW-TO-PIPE	AUG	-	-	-	-	-	-	-
2	HPSI			OWN	-	-	-	-	-	s	-
				PRE	-	-	-	-	-	-	-
C-F-1	I107500		B-16A	ISI	-	-	-	-	-	-	-
THIN	16R		PIPE-TO-45 ELBOW	AUG	-	-	-	-	-	-	-
2	HPSI			OWN	-	-	-	-	-	-	-
				PRE	-	-	-	-	-	-	-
C-F-1	I107600		B-16A	ISI	-	-	-	-	-	-	-
THIN	17R		45 ELBOW-TO-PIPE	AUG	-	-	-	-	-	-	-
2	HPSI			OWN	-	-	-	-	-	-	-
				PRE	-	-	-	-	-	-	-
C-F-1	I107800		B-16A	ISI	-	-	-	-	-	-	-
THIN	18R		PIPE-TO-45 ELBOW	AUG	-	-	-	-	-	-	-
2	HPSI			OWN	-	-	-	-	-	-	-
				PRE	-	-	-	-	-	-	-
C-F-1	I107900		B-16A	ISI	-	-	-	-	-	-	-
THIN	19R		45 ELBOW-TO-PIPE	AUG	-	-	-	-	-	-	-
2	HPSI			OWN	-	-	-	-	-	-	-
				PRE	-	-	-	-	-	-	-
C-F-1	I107950		B-16A	ISI	-	-	-	-	-	-	-
THIN	126		PIPE-TO-PIPE	AUG	-	-	-	-	-	-	-
2	HPSI			OWN	-	-	-	-	-	-	-
				PRE	-	-	-	-	-	-	-
C-F-1	I108000		B-16A	ISI	-	-	-	-	-	-	-
THIN	20R (WELD 129)		PIPE-TO-ELBOW	AUG	-	-	-	-	-	-	-
2	HPSI			OWN	-	-	-	-	-	-	-
				PRE	-	-	-	-	-	-	-
C-F-1	I108100	OWN/PT/PT-106	B-16A	ISI	-	-	-	-	-	-	-
THIN	21R (WELD 35)	OWN/UT/UT-208	ELBOW-TO-TEE	AUG	-	-	-	-	-	-	-
2	HPSI			OWN	-	-	-	s	-	-	-
				PRE	-	-	-	-	-	-	-
C-F-1	I108200		B-16A	ISI	-	-	-	-	-	-	-
THIN	22R (WELD 37)		TEE-TO-PIPE	AUG	-	-	-	-	-	-	-
2	HPSI			OWN	-	-	-	-	-	-	-
				PRE	-	-	-	-	-	-	-

Category, ItemNO, Class	Summary / CompID / System	Scope / Method / Procedure	Iso No. Comp. Desc. Code Case		Period 1 00	Period 1 02	Period 2 03	Period 2 05	Period 2 06	Period 3 08	Period 3 09
C-F-1	I108300		B-16A	ISI	-	-	-	-	-	-	-
THIN	23R (WELD 59)		PIPE-TO-TEE	AUG	-	-	-	-	-	-	-
2	HPSI			OWN	-	-	-	-	-	-	-
				PRE	-	-	-	-	-	-	-
C-F-1	I108400		B-16A	ISI	-	-	-	-	-	-	-
THIN	24R (WELD 60)		TEE-TO-REDUCER	AUG	-	-	-	-	-	-	-
2	HPSI			OWN	-	-	-	-	-	-	-
				PRE	-	-	-	-	-	-	-
C-F-1	I108500		B-17	ISI	-	-	-	-	-	-	-
THIN	14		PIPE-TO-ELBOW (PEN 111)	AUG	-	-	-	-	-	-	-
2	RHR			OWN	-	-	-	-	-	-	-
				PRE	-	-	-	-	-	-	-
C-F-1	I108600		B-17	ISI	-	-	-	-	-	-	-
THIN	15		ELBOW-TO-PIPE	AUG	-	-	-	-	-	-	-
2	RHR			OWN	-	-	-	-	-	-	-
				PRE	-	-	-	-	-	-	-
C-F-1	I108900		B-17	ISI	-	-	-	-	-	-	-
THIN	16		PIPE-TO-PIPE	AUG	-	-	-	-	-	-	-
2	RHR			OWN	-	-	-	-	-	-	-
				PRE	-	-	-	-	-	-	-
C-F-1	I109200		B-17	ISI	-	-	-	-	-	-	-
THIN	17		PIPE-TO-TEE	AUG	-	-	-	-	-	-	-
2	RHR			OWN	-	-	-	-	-	-	-
				PRE	-	-	-	-	-	-	-
C-F-1	I109300	OWN/PT/PT-106	B-17	ISI	-	-	-	-	-	-	-
THIN	18	OWN/UT/UT-208	TEE-TO-PIPE	AUG	-	-	-	-	-	-	-
2	RHR			OWN	-	-	-	-	-	-	s
				PRE	-	-	-	-	-	-	-
C-F-1	I109500		B-17	ISI	-	-	-	-	-	-	-
THIN	19		PIPE-TO-ELBOW	AUG	-	-	-	-	-	-	-
2	RHR			OWN	-	-	-	-	-	-	-
				PRE	-	-	-	-	-	-	-
C-F-1	I109600		B-17	ISI	-	-	-	-	-	-	-
THIN	20		ELBOW-TO-PIPE	AUG	-	-	-	-	-	-	-
2	RHR			OWN	-	-	-	-	-	-	-
				PRE	-	-	-	-	-	-	-
C-F-1	I109700		B-17	ISI	-	-	-	-	-	-	-
THIN	20BC		6" BRANCH WELD	AUG	-	-	-	-	-	-	-
2	RHR			OWN	-	-	-	-	-	-	-
				PRE	-	-	-	-	-	-	-

Category, ItemNO, Class	Summary / CompID / System	Scope / Method / Procedure	Iso No. Comp. Desc. Code Case		Period 1 00	Period 1 02	Period 2 03	Period 2 05	Period 2 06	Period 3 08	Period 3 09
C-F-1	I109900		B-17	ISI	-	-	-	-	-	-	-
THIN	21		PIPE-TO-VALVE(720)	AUG	-	-	-	-	-	-	-
2	RHR			OWN	-	-	-	-	-	-	-
				PRE	-	-	-	-	-	-	-
C-F-1	I110000		B-17	ISI	-	-	-	-	-	-	-
THIN	1		PIPE-TO-PIPE	AUG	-	-	-	-	-	-	-
2	RHR			OWN	-	-	-	-	-	-	-
				PRE	-	-	-	-	-	-	-
C-F-1	I110200		B-17	ISI	-	-	-	-	-	-	-
THIN	2		PIPE-TO-PIPE	AUG	-	-	-	-	-	-	-
2	RHR			OWN	-	-	-	-	-	-	-
				PRE	-	-	-	-	-	-	-
C-F-1	I110400		B-17	ISI	-	-	-	-	-	-	-
THIN	3		PIPE-TO-ELBOW	AUG	-	-	-	-	-	-	-
2	RHR			OWN	-	-	-	-	-	-	-
				PRE	-	-	-	-	-	-	-
C-F-1	I110500		B-17	ISI	-	-	-	-	-	-	-
THIN	4		ELBOW-TO-PIPE	AUG	-	-	-	-	-	-	-
2	RHR			OWN	-	-	-	-	-	-	-
				PRE	-	-	-	-	-	-	-
C-F-1	I110600		B-17	ISI	-	-	-	-	-	-	-
THIN	5		PIPE-TO-ELBOW	AUG	-	-	-	-	-	-	-
2	RHR			OWN	-	-	-	-	-	-	-
				PRE	-	-	-	-	-	-	-
C-F-1	I110700		B-17	ISI	-	-	-	-	-	-	-
THIN	6		ELBOW-TO-VALVE(852A)	AUG	-	-	-	-	-	-	-
2	RHR			OWN	-	-	-	-	-	-	-
				PRE	-	-	-	-	-	-	-
C-F-1	I110800	OWN/PT/PT-106	B-18	ISI	-	-	-	-	-	-	-
THIN	1	OWN/UT/UT-208	TEE-TO-PIPE	AUG	-	-	-	-	-	-	-
2	RHR			OWN	-	-	c	-	-	-	-
				PRE	-	-	-	-	-	-	-
C-F-1	I110900	OWN/PT/PT-106	B-18	ISI	-	-	-	-	-	-	-
THIN	1A	OWN/UT/UT-208	PIPE-TO-ELBOW	AUG	-	-	-	-	-	-	-
2	RHR			OWN	c	-	-	-	-	-	-
				PRE	-	-	-	-	-	-	-
C-F-1	I111000		B-18	ISI	-	-	-	-	-	-	-
THIN	2		ELBOW-TO-PIPE	AUG	-	-	-	-	-	-	-
2	RHR			OWN	-	-	-	-	-	-	-
				PRE	-	-	-	-	-	-	-

Category, ItemNO, Class	Summary / CompID / System	Scope / Method / Procedure	Iso No. Comp. Desc. Code Case		Period 1 00	Period 1 02	Period 2 03	Period 2 05	Period 2 06	Period 3 08	Period 3 09
C-F-1	I111200		B-18	ISI	-	-	-	-	-	-	-
THIN	3		PIPE-TO-PIPE	AUG	-	-	-	-	-	-	-
2	RHR			OWN	-	-	-	-	-	-	-
				PRE	-	-	-	-	-	-	-
C-F-1	I111400		B-18	ISI	-	-	-	-	-	-	-
THIN	4		PIPE-TO-PIPE	AUG	-	-	-	-	-	-	-
2	RHR			OWN	-	-	-	-	-	-	-
				PRE	-	-	-	-	-	-	-
C-F-1	I111600		B-18	ISI	-	-	-	-	-	-	-
THIN	5		PIPE-TO-ELBOW	AUG	-	-	-	-	-	-	-
2	RHR			OWN	-	-	-	-	-	-	-
				PRE	-	-	-	-	-	-	-
C-F-1	I111700		B-18	ISI	-	-	-	-	-	-	-
THIN	6		ELBOW-TO-ELBOW	AUG	-	-	-	-	-	-	-
2	RHR			OWN	-	-	-	-	-	-	-
				PRE	-	-	-	-	-	-	-
C-F-1	I111800		B-18	ISI	-	-	-	-	-	-	-
THIN	7		ELBOW-TO-PIPE	AUG	-	-	-	-	-	-	-
2	RHR			OWN	-	-	-	-	-	-	-
				PRE	-	-	-	-	-	-	-
C-F-1	I111900		B-18	ISI	-	-	-	-	-	-	-
THIN	8		PIPE-TO-ELBOW	AUG	-	-	-	-	-	-	-
2	RHR			OWN	-	-	-	-	-	-	-
				PRE	-	-	-	-	-	-	-
C-F-1	I112000		B-18	ISI	-	-	-	-	-	-	-
THIN	9		ELBOW-TO-PIPE	AUG	-	-	-	-	-	-	-
2	RHR			OWN	-	-	-	-	-	-	-
				PRE	-	-	-	-	-	-	-
C-F-1	I112400		B-18	ISI	-	-	-	-	-	-	-
THIN	10		PIPE-TO-ELBOW	AUG	-	-	-	-	-	-	-
2	RHR			OWN	-	-	-	-	-	-	-
				PRE	-	-	-	-	-	-	-
C-F-1	I112500		B-18	ISI	-	-	-	-	-	-	-
THIN	11		ELBOW-TO-PIPE	AUG	-	-	-	-	-	-	-
2	RHR			OWN	-	-	-	-	-	-	-
				PRE	-	-	-	-	-	-	-
C-F-1	I112600		B-18	ISI	-	-	-	-	-	-	-
THIN	12		PIPE-TO-ELBOW	AUG	-	-	-	-	-	-	-
2	RHR			OWN	-	-	-	-	-	-	-
				PRE	-	-	-	-	-	-	-

Category, ItemNO, Class	Summary / CompID / System	Scope / Method / Procedure	Iso No. Comp. Desc. Code Case		Period 1 00	Period 1 02	Period 2 03	Period 2 05	Period 2 06	Period 3 08	Period 3 09
C-F-1	I112700		B-18	ISI	-	-	-	-	-	-	-
THIN	13		ELBOW-TO-PIPE	AUG	-	-	-	-	-	-	-
2	RHR			OWN	-	-	-	-	-	-	-
				PRE	-	-	-	-	-	-	-
C-F-1	I112800		B-18	ISI	-	-	-	-	-	-	-
THIN	14		PIPE-TO-ELBOW	AUG	-	-	-	-	-	-	-
2	RHR			OWN	-	-	-	-	-	-	s
				PRE	-	-	-	-	-	-	-
C-F-1	I113100		B-18	ISI	-	-	-	-	-	-	-
THIN	15		ELBOW-TO-PIPE	AUG	-	-	-	-	-	-	-
2	RHR			OWN	-	-	-	-	-	-	-
				PRE	-	-	-	-	-	-	-
C-F-1	I113200		B-18	ISI	-	-	-	-	-	-	-
THIN	16		PIPE-TO-VALVE(852B)	AUG	-	-	-	-	-	-	-
2	RHR			OWN	-	-	-	-	-	-	-
				PRE	-	-	-	-	-	-	-
C-F-1	I120100		B-19	ISI	-	-	-	-	-	-	-
THIN	1		PIPE-TO-VALVE(896A) (RWST)	AUG	-	-	-	-	-	-	-
2	HPSI			OWN	-	-	-	-	-	-	-
				PRE	-	-	-	-	-	-	-
C-F-1	I120200		B-19	ISI	-	-	-	-	-	-	-
THIN	2		VALVE 896A-TO-PIPE	AUG	-	-	-	-	-	-	-
2	HPSI			OWN	-	-	-	-	-	-	-
				PRE	-	-	-	-	-	-	-
C-F-1	I120500		B-19	ISI	-	-	-	-	-	-	-
THIN	3		PIPE-TO-VALVE(896B)	AUG	-	-	-	-	-	-	-
2	HPSI			OWN	-	-	-	-	-	-	-
				PRE	-	-	-	-	-	-	-
C-F-1	I120600		B-19	ISI	-	-	-	-	-	-	-
THIN	4		VALVE 896B-TO-CROSS	AUG	-	-	-	-	-	-	-
2	HPSI			OWN	-	-	-	-	-	-	-
				PRE	-	-	-	-	-	-	-
C-F-1	I120700	OWN/PT/PT-106	B-19	ISI	-	-	-	-	-	-	-
THIN	5	OWN/UT/UT-208	REDUCER-TO-CROSS	AUG	-	-	-	-	-	-	-
2	HPSI			OWN	-	-	-	-	-	s	-
				PRE	-	-	-	-	-	-	-
C-F-1	I120800		B-19	ISI	-	-	-	-	-	-	-
THIN	6		CROSS-TO-PIPE	AUG	-	-	-	-	-	-	-
2	CS			OWN	-	-	-	-	-	-	-
				PRE	-	-	-	-	-	-	-

Category, ItemNO, Class	Summary / CompID / System	Scope / Method / Procedure	Iso No. Comp. Desc. Code Case		Period 1 00	Period 1 02	Period 2 03	Period 2 05	Period 2 06	Period 3 08	Period 3 09
C-F-1	I120900		B-19	ISI	-	-	-	-	-	-	-
THIN	6A		CROSS-TO-PIPE	AUG	-	-	-	-	-	-	-
2	HPSI			OWN	-	-	-	-	-	-	-
				PRE	-	-	-	-	-	-	-
C-F-1	I121000		B-19	ISI	-	-	-	-	-	-	-
THIN	7		PIPE-TO-ELBOW	AUG	-	-	-	-	-	-	-
2	HPSI			OWN	-	-	-	-	-	-	-
				PRE	-	-	-	-	-	-	-
C-F-1	I121100		B-19	ISI	-	-	-	-	-	-	-
THIN	8		ELBOW-TO-PIPE	AUG	-	-	-	-	-	-	-
2	HPSI			OWN	-	-	-	-	-	-	-
				PRE	-	-	-	-	-	-	-
C-F-1	I121200		B-19	ISI	-	-	-	-	-	-	-
THIN	9		PIPE-TO-ELBOW	AUG	-	-	-	-	-	-	-
2	HPSI			OWN	-	-	-	-	-	-	-
				PRE	-	-	-	-	-	-	-
C-F-1	I121300		B-19	ISI	-	-	-	-	-	-	-
THIN	10		ELBOW-TO-PIPE	AUG	-	-	-	-	-	-	-
2	HPSI			OWN	-	-	-	-	-	-	-
				PRE	-	-	-	-	-	-	-
C-F-1	I121400		B-19	ISI	-	-	-	-	-	-	-
THIN	11		PIPE-TO-TEE	AUG	-	-	-	-	-	-	-
2	HPSI			OWN	-	-	-	-	-	-	-
				PRE	-	-	-	-	-	-	-
C-F-1	I121500		B-19	ISI	-	-	-	-	-	-	-
THIN	12		TEE-TO-REDUCER	AUG	-	-	-	-	-	-	-
2	HPSI			OWN	-	-	-	-	-	-	-
				PRE	-	-	-	-	-	-	-
C-F-1	I121600	OWN/PT/PT-106	B-19	ISI	-	-	-	-	-	-	-
THIN	13	OWN/UT/UT-208	TEE-TO-PIPE	AUG	-	-	-	-	-	-	-
2	HPSI	OWN/UT/UT-208		OWN	c	-	-	-	-	-	-
				PRE	-	-	-	-	-	-	-
C-F-1	I121700		B-19	ISI	-	-	-	-	-	-	-
THIN	14		PIPE-TO-ELBOW	AUG	-	-	-	-	-	-	-
2	HPSI			OWN	-	-	-	-	-	-	-
				PRE	-	-	-	-	-	-	-
C-F-1	I121800		B-19	ISI	-	-	-	-	-	-	-
THIN	15		ELBOW-TO-PIPE	AUG	-	-	-	-	-	-	-
2	HPSI			OWN	-	-	-	-	-	-	-
				PRE	-	-	-	-	-	-	-

Category, ItemNO, Class	Summary / CompID / System	Scope / Method / Procedure	Iso No. Comp. Desc. Code Case		Period 1 00	Period 1 02	Period 2 03	Period 2 05	Period 2 06	Period 3 08	Period 3 09
C-F-1	I121900		B-19	ISI	-	-	-	-	-	-	-
THIN	16		PIPE-TO-ELBOW	AUG	-	-	-	-	-	-	-
2	HPSI			OWN	-	-	-	-	-	-	-
				PRE	-	-	-	-	-	-	-
C-F-1	I122200		B-19	ISI	-	-	-	-	-	-	-
THIN	17		ELBOW-TO-PIPE	AUG	-	-	-	-	-	-	-
2	HPSI			OWN	-	-	-	-	-	-	-
				PRE	-	-	-	-	-	-	-
C-F-1	I122300		B-19	ISI	-	-	-	-	-	-	-
THIN	18		PIPE-TO-VALVE(825A)	AUG	-	-	-	-	-	-	-
2	HPSI			OWN	-	-	-	-	-	-	-
				PRE	-	-	-	-	-	-	-
C-F-1	I122400		B-19	ISI	-	-	-	-	-	-	-
THIN	19R (WELD 65)		VALVE 825A-TO-PIPE	AUG	-	-	-	-	-	-	-
2	HPSI			OWN	-	-	-	-	-	-	-
				PRE	-	-	-	-	-	-	-
C-F-1	I122500		B-19	ISI	-	-	-	-	-	-	-
THIN	20R (WELD 67)		PIPE-TO-ELBOW	AUG	-	-	-	-	-	-	-
2	HPSI			OWN	-	-	-	-	-	-	-
				PRE	-	-	-	-	-	-	-
C-F-1	I122800		B-19	ISI	-	-	-	-	-	-	-
THIN	21R (WELD 107)		ELBOW-TO-PIPE	AUG	-	-	-	-	-	-	-
2	HPSI			OWN	-	-	-	-	-	-	-
				PRE	-	-	-	-	-	-	-
C-F-1	I122900		B-19	ISI	-	-	-	-	-	-	-
THIN	22R (WELD 64)		PIPE-TO-TEE	AUG	-	-	-	-	-	-	-
2	HPSI			OWN	-	-	-	-	-	-	-
				PRE	-	-	-	-	-	-	-
C-F-1	I123000	OWN/PT/PT-106	B-16B	ISI	-	-	-	-	-	-	-
THIN	23R (WELD 61)	OWN/UT/UT-208	TEE-TO-TEE	AUG	-	-	-	-	-	-	-
2	HPSI			OWN	c	-	-	-	-	-	-
				PRE	-	-	-	-	-	-	-
C-F-1	I124100		B-19	ISI	-	-	-	-	-	-	-
THIN	1		REDUCER-TO-TEE	AUG	-	-	-	-	-	-	-
2	HPSI			OWN	-	-	-	-	-	-	-
				PRE	-	-	-	-	-	-	-
C-F-1	I124400		B-19	ISI	-	-	-	-	-	-	-
THIN	2		TEE-TO-REDUCER	AUG	-	-	-	-	-	-	-
2	HPSI			OWN	-	-	-	-	-	-	-
				PRE	-	-	-	-	-	-	-

Category, ItemNO, Class	Summary / CompID / System	Scope / Method / Procedure	Iso No. Comp. Desc. Code Case		Period 1 00	Period 1 02	Period 2 03	Period 2 05	Period 2 06	Period 3 08	Period 3 09
C-F-1	I124500		B-19	ISI	-	-	-	-	-	-	-
THIN	1		REDUCER-TO-PIPE	AUG	-	-	-	-	-	-	-
2	HPSI			OWN	-	-	-	-	-	-	-
				PRE	-	-	-	-	-	-	-
C-F-1	I124800		B-19	ISI	-	-	-	-	-	-	-
THIN	2		PIPE-TO-ELBOW	AUG	-	-	-	-	-	-	-
2	HPSI			OWN	-	-	-	-	-	-	-
				PRE	-	-	-	-	-	-	-
C-F-1	I124900		B-19	ISI	-	-	-	-	-	-	-
THIN	3		ELBOW-TO-PIPE	AUG	-	-	-	-	-	-	-
2	HPSI			OWN	-	-	-	-	-	-	-
				PRE	-	-	-	-	-	-	-
C-F-1	I125000		B-19	ISI	-	-	-	-	-	-	-
THIN	4		PIPE-TO-ELBOW	AUG	-	-	-	-	-	-	-
2	HPSI			OWN	-	-	-	-	-	-	-
				PRE	-	-	-	-	-	-	-
C-F-1	I125100		B-19	ISI	-	-	-	-	-	-	-
THIN	5		ELBOW-TO-PIPE	AUG	-	-	-	-	-	-	-
2	HPSI			OWN	-	-	-	-	-	-	-
				PRE	-	-	-	-	-	-	-
C-F-1	I125200		B-19	ISI	-	-	-	-	-	-	-
THIN	6		PIPE-TO-ELBOW	AUG	-	-	-	-	-	-	-
2	HPSI			OWN	-	-	-	-	-	-	-
				PRE	-	-	-	-	-	-	-
C-F-1	I125500		B-19	ISI	-	-	-	-	-	-	-
THIN	7		ELBOW-TO-VALVE(825B)	AUG	-	-	-	-	-	-	-
2	HPSI			OWN	-	-	-	-	-	-	-
				PRE	-	-	-	-	-	-	-
C-F-1	I125600		B-19	ISI	-	-	-	-	-	-	-
THIN	8R (WELD 42)		VALVE 825B-TO-PIPE	AUG	-	-	-	-	-	-	-
2	HPSI			OWN	-	-	-	-	-	-	-
				PRE	-	-	-	-	-	-	-
C-F-1	I125700		B-19	ISI	-	-	-	-	-	-	-
THIN	9R (WELD 44)		PIPE-TO-ELBOW	AUG	-	-	-	-	-	-	-
2	HPSI			OWN	-	-	-	-	-	-	-
				PRE	-	-	-	-	-	-	-
C-F-1	I126000		B-19	ISI	-	-	-	-	-	-	-
THIN	10R (WELD 43C)		ELBOW-TO-PIPE	AUG	-	-	-	-	-	-	-
2	HPSI			OWN	-	-	-	-	-	-	-
				PRE	-	-	-	-	-	-	-

Category, ItemNO, Class	Summary / CompID / System	Scope / Method / Procedure	Iso No. Comp. Desc. Code Case		Period 1 00	Period 1 02	Period 2 03	Period 2 05	Period 2 06	Period 3 08	Period 3 09
C-F-1	I126100		B-19	ISI	-	-	-	-	-	-	-
THIN	11R (WELD 41)		PIPE-TO-TEE	AUG	-	-	-	-	-	-	-
2	HPSI			OWN	-	-	-	-	-	-	-
				PRE	-	-	-	-	-	-	-
C-F-1	I126200	OWN/PT/PT-106	B-16B	ISI	-	-	-	-	-	-	-
THIN	12R (WELD 38D)	OWN/UT/UT-208	TEE-TO-TEE	AUG	-	-	-	-	-	-	-
2	HPSI			OWN	-	c	-	-	-	-	-
				PRE	-	-	-	-	-	-	-
C-F-1	I130300		B-20	ISI	-	-	-	-	-	-	-
THIN	1		PIPE-TO-PIPE (RWST)	AUG	-	-	-	-	-	-	-
2	RHR			OWN	-	-	-	-	-	-	-
				PRE	-	-	-	-	-	-	-
C-F-1	I130400		B-20	ISI	-	-	-	-	-	-	-
THIN	2		PIPE-TO-ELBOW	AUG	-	-	-	-	-	-	-
2	RHR			OWN	-	-	-	-	-	-	-
				PRE	-	-	-	-	-	-	-
C-F-1	I130500		B-20	ISI	-	-	-	-	-	-	-
THIN	3		ELBOW-TO-ELBOW	AUG	-	-	-	-	-	-	-
2	RHR			OWN	-	-	-	-	-	-	-
				PRE	-	-	-	-	-	-	-
C-F-1	I130600		B-20	ISI	-	-	-	-	-	-	-
THIN	4		ELBOW-TO-VALVE(856)	AUG	-	-	-	-	-	-	-
2	RHR			OWN	-	-	-	-	-	-	-
				PRE	-	-	-	-	-	-	-
C-F-1	I130700		B-20	ISI	-	-	-	-	-	-	-
THIN	5		VALVE 856-TO-PIPE	AUG	-	-	-	-	-	-	-
2	RHR			OWN	-	-	-	-	-	-	-
				PRE	-	-	-	-	-	-	-
C-F-1	I130800		B-20	ISI	-	-	-	-	-	-	-
THIN	6		PIPE-TO-VALVE(854)	AUG	-	-	-	-	-	-	-
2	RHR			OWN	-	-	-	-	-	-	-
				PRE	-	-	-	-	-	-	-
C-F-1	I130900		B-20	ISI	-	-	-	-	-	-	-
THIN	7		VALVE 854-TO-PIPE	AUG	-	-	-	-	-	-	-
2	RHR			OWN	-	-	-	-	-	-	-
				PRE	-	-	-	-	-	-	-
C-F-1	I131000		B-20	ISI	-	-	-	-	-	-	-
THIN	8		PIPE-TO-ELBOW	AUG	-	-	-	-	-	-	-
2	RHR			OWN	-	-	-	-	-	-	-
				PRE	-	-	-	-	-	-	-

Category, ItemNO, Class	Summary / CompID / System	Scope / Method / Procedure	Iso No. Comp. Desc. Code Case		Period 1 00	Period 1 02	Period 2 03	Period 2 05	Period 2 06	Period 3 08	Period 3 09
C-F-1	I131100		B-20	ISI	-	-	-	-	-	-	-
THIN	9		ELBOW-TO-PIPE	AUG	-	-	-	-	-	-	-
2	RHR			OWN	-	-	-	-	-	-	-
				PRE	-	-	-	-	-	-	-
C-F-1	I131300		B-20	ISI	-	-	-	-	-	-	-
THIN	10		PIPE-TO-ELBOW	AUG	-	-	-	-	-	-	-
2	RHR			OWN	-	-	-	-	-	-	-
				PRE	-	-	-	-	-	-	-
C-F-1	I131400		B-20	ISI	-	-	-	-	-	-	-
THIN	11		ELBOW-TO-PIPE	AUG	-	-	-	-	-	-	-
2	RHR			OWN	-	-	-	-	-	-	-
				PRE	-	-	-	-	-	-	-
C-F-1	I131500		B-20	ISI	-	-	-	-	-	-	-
THIN	12		PIPE-TO-TEE	AUG	-	-	-	-	-	-	-
2	RHR			OWN	-	-	-	-	-	-	-
				PRE	-	-	-	-	-	-	-
C-F-1	I131600		B-20	ISI	-	-	-	-	-	-	-
THIN	13		TEE-TO-PIPE	AUG	-	-	-	-	-	-	-
2	RHR			OWN	-	-	-	-	-	-	-
				PRE	-	-	-	-	-	-	-
C-F-1	I131900		B-20	ISI	-	-	-	-	-	-	-
THIN	14		PIPE-TO-TEE	AUG	-	-	-	-	-	-	-
2	RHR			OWN	-	-	-	-	-	-	-
				PRE	-	-	-	-	-	-	-
C-F-1	I132000		B-20	ISI	-	-	-	-	-	-	-
THIN	15		TEE-TO-ELBOW	AUG	-	-	-	-	-	-	-
2	RHR			OWN	-	-	-	-	-	-	-
				PRE	-	-	-	-	-	-	-
C-F-1	I132100		B-20	ISI	-	-	-	-	-	-	-
THIN	16		ELBOW-TO-VALVE(704B)	AUG	-	-	-	-	-	-	-
2	RHR			OWN	-	-	-	-	-	-	-
				PRE	-	-	-	-	-	-	-
C-F-1	I132200		B-20	ISI	-	-	-	-	-	-	-
THIN	17		VALVE(704B)-TO-PIPE	AUG	-	-	-	-	-	-	-
2	RHR			OWN	-	-	-	-	-	-	-
				PRE	-	-	-	-	-	-	-
C-F-1	I132300		B-20	ISI	-	-	-	-	-	-	-
THIN	18		PIPE-TO-TEE	AUG	-	-	-	-	-	-	-
2	RHR			OWN	-	-	-	-	-	-	-
				PRE	-	-	-	-	-	-	-

Category, ItemNO, Class	Summary / CompID / System	Scope / Method / Procedure	Iso No. Comp. Desc. Code Case		Period 1 00	Period 1 02	Period 2 03	Period 2 05	Period 2 06	Period 3 08	Period 3 09
C-F-1	I132400		B-20	ISI	-	-	-	-	-	-	-
THIN	19		TEE-TO-PIPE	AUG	-	-	-	-	-	-	-
2	RHR			OWN	-	-	-	-	-	-	-
				PRE	-	-	-	-	-	-	-
C-F-1	I132500		B-20	ISI	-	-	-	-	-	-	-
THIN	20		PIPE-TO-ELBOW	AUG	-	-	-	-	-	-	-
2	RHR			OWN	-	-	-	-	-	-	-
				PRE	-	-	-	-	-	-	-
C-F-1	I132600		B-20	ISI	-	-	-	-	-	-	-
THIN	21		ELBOW-TO-ELBOW	AUG	-	-	-	-	-	-	-
2	RHR			OWN	-	-	-	-	-	-	-
				PRE	-	-	-	-	-	-	-
C-F-1	I132700		B-20	ISI	-	-	-	-	-	-	-
THIN	22		ELBOW-TO-PIPE	AUG	-	-	-	-	-	-	-
2	RHR			OWN	-	-	-	-	-	-	-
				PRE	-	-	-	-	-	-	-
C-F-1	I132800		B-20	ISI	-	-	-	-	-	-	-
THIN	23		PIPE-TO-ELBOW	AUG	-	-	-	-	-	-	-
2	RHR			OWN	-	-	-	-	-	-	-
				PRE	-	-	-	-	-	-	-
C-F-1	I133100	OWN/PT/PT-106	B-20	ISI	-	-	-	-	-	-	-
THIN	24	OWN/UT/UT-208	ELBOW-TO-FLANGE (RHR PUMP B SUCT)	AUG	-	-	-	-	-	-	-
2	RHR			OWN	c	-	-	-	-	-	-
				PRE	-	-	-	-	-	-	-
C-F-1	I133200		B-22	ISI	-	-	-	-	-	-	-
THIN	1		VALVE(701)-TO-ELBOW	AUG	-	-	-	-	-	-	-
2	RHR			OWN	-	-	-	-	-	-	-
				PRE	-	-	-	-	-	-	-
C-F-1	I133300		B-22	ISI	-	-	-	-	-	-	-
THIN	1A		ELBOW-TO-PIPE	AUG	-	-	-	-	-	-	-
2	RHR			OWN	-	-	-	-	-	-	-
				PRE	-	-	-	-	-	-	-
C-F-1	I133400		B-22	ISI	-	-	-	-	-	-	-
THIN	2		PIPE-TO-ELBOW	AUG	-	-	-	-	-	-	-
2	RHR			OWN	-	-	-	-	-	-	-
				PRE	-	-	-	-	-	-	-
C-F-1	I133500		B-22	ISI	-	-	-	-	-	-	-
THIN	3		ELBOW-TO-PIPE	AUG	-	-	-	-	-	-	-
2	RHR			OWN	-	-	-	-	-	-	-
				PRE	-	-	-	-	-	-	-

Category, ItemNO, Class	Summary / CompID / System	Scope / Method / Procedure	Iso No. Comp. Desc. Code Case		Period 1 00	Period 1 02	Period 2 03	Period 2 05	Period 2 06	Period 3 08	Period 3 09
C-F-1	I133800		B-22	ISI	-	-	-	-	-	-	-
THIN	4		PIPE-TO-PIPE	AUG	-	-	-	-	-	-	-
2	RHR			OWN	-	-	-	-	-	-	-
				PRE	-	-	-	-	-	-	-
C-F-1	I133850		B-22	ISI	-	-	-	-	-	-	-
THIN	4A		BENT PIPE-TO-PIPE	AUG	-	-	-	-	-	-	-
2	RHR			OWN	-	-	-	-	-	-	-
				PRE	-	-	-	-	-	-	-
C-F-1	I134120		B-22	ISI	-	-	-	-	-	-	-
THIN	4B		PIPE-TO-PIPE	AUG	-	-	-	-	-	-	-
2	RHR			OWN	-	-	-	-	-	-	-
				PRE	-	-	-	-	-	-	-
C-F-1	I134130		B-22	ISI	-	-	-	-	-	-	-
THIN	4C		PIPE-TO-PIPE	AUG	-	-	-	-	-	-	-
2	RHR			OWN	-	-	-	-	-	-	-
				PRE	-	-	-	-	-	-	-
C-F-1	I134200		B-22	ISI	-	-	-	-	-	-	-
THIN	5		PIPE-TO-PIPE	AUG	-	-	-	-	-	-	-
2	RHR			OWN	-	-	-	-	-	-	-
				PRE	-	-	-	-	-	-	-
C-F-1	I134300		B-22	ISI	-	-	-	-	-	-	-
THIN	6		PIPE-TO-PIPE	AUG	-	-	-	-	-	-	-
2	RHR			OWN	-	-	-	-	-	-	-
				PRE	-	-	-	-	-	-	-
C-F-1	I134700		B-22	ISI	-	-	-	-	-	-	-
THIN	7		PIPE-TO-PIPE	AUG	-	-	-	-	-	-	-
2	RHR			OWN	-	-	-	-	-	-	-
				PRE	-	-	-	-	-	-	-
C-F-1	I134900		B-22	ISI	-	-	-	-	-	-	-
THIN	8		PIPE-TO-PIPE	AUG	-	-	-	-	-	-	-
2	RHR			OWN	-	-	-	-	-	-	-
				PRE	-	-	-	-	-	-	-
C-F-1	I135000		B-22	ISI	-	-	-	-	-	-	-
THIN	9		PIPE-TO-ELBOW	AUG	-	-	-	-	-	-	-
2	RHR			OWN	-	-	-	-	-	-	-
				PRE	-	-	-	-	-	-	-
C-F-1	I135100		B-22	ISI	-	-	-	-	-	-	-
THIN	10		ELBOW-TO-PIPE	AUG	-	-	-	-	-	-	-
2	RHR			OWN	-	-	-	-	-	-	-
				PRE	-	-	-	-	-	-	-

Category, ItemNO, Class	Summary / CompID / System	Scope / Method / Procedure	Iso No. Comp. Desc. Code Case		Period 1 00	Period 1 02	Period 2 03	Period 2 05	Period 2 06	Period 3 08	Period 3 09
C-F-1	I135200		B-22	ISI	-	-	-	-	-	-	-
THIN	11		PIPE-TO-ELBOW	AUG	-	-	-	-	-	-	-
2	RHR			OWN	-	-	-	-	-	-	-
				PRE	-	-	-	-	-	-	-
C-F-1	I135300	OWN/PT/PT-106	B-22	ISI	-	-	-	-	-	-	-
THIN	12	OWN/UT/UT-208	ELBOW-TO-PIPE	AUG	-	-	-	-	-	-	-
2	RHR			OWN	-	-	c	-	-	-	-
				PRE	-	-	-	-	-	-	-
C-F-1	I135301		B-22	ISI	-	-	-	-	-	-	-
THIN	12A		PIPE-TO-PIPE (PEN 140)	AUG	-	-	-	-	-	-	-
2	RHR			OWN	-	-	-	-	-	-	-
				PRE	-	-	-	-	-	-	-
C-F-1	I135400		B-20A	ISI	-	-	-	-	-	-	-
THIN	13		PIPE-TO-PIPE (PEN 140)	AUG	-	-	-	-	-	-	-
2	RHR			OWN	-	-	-	-	-	-	-
				PRE	-	-	-	-	-	-	-
C-F-1	I135600		B-20A	ISI	-	-	-	-	-	-	-
THIN	14		PIPE-TO-ELBOW	AUG	-	-	-	-	-	-	-
2	RHR			OWN	-	-	-	-	-	-	-
				PRE	-	-	-	-	-	-	-
C-F-1	I135700		B-20A	ISI	-	-	-	-	-	-	-
THIN	15		ELBOW-TO-PIPE	AUG	-	-	-	-	-	-	-
2	RHR			OWN	-	-	-	-	-	-	-
				PRE	-	-	-	-	-	-	-
C-F-1	I135900	OWN/PT/PT-106	B-20A	ISI	-	-	-	-	-	-	-
THIN	16	OWN/UT/UT-208	PIPE-TO-ELBOW	AUG	-	-	-	-	-	-	-
2	RHR			OWN	-	-	c	-	-	-	-
				PRE	-	-	-	-	-	-	-
C-F-1	I136000	OWN/PT/PT-106	B-20A	ISI	-	-	-	-	-	-	-
THIN	17	OWN/UT/UT-208	ELBOW-TO-TEE	AUG	-	-	-	-	-	-	-
2	RHR			OWN	c	-	-	-	-	-	-
				PRE	-	-	-	-	-	-	-
C-F-1	I136100		B-20	ISI	-	-	-	-	-	-	-
THIN	1		VALVE 850B-TO-PIPE	AUG	-	-	-	-	-	-	-
2	RHR			OWN	-	-	-	-	-	-	-
				PRE	-	-	-	-	-	-	-
C-F-1	I136300		B-20	ISI	-	-	-	-	-	-	-
THIN	2		PIPE-TO-ELBOW	AUG	-	-	-	-	-	-	-
2	RHR			OWN	-	-	-	-	-	-	-
				PRE	-	-	-	-	-	-	-

Category, ItemNO, Class	Summary / CompID / System	Scope / Method / Procedure	Iso No. Comp. Desc. Code Case		Period 1 00	Period 1 02	Period 2 03	Period 2 05	Period 2 06	Period 3 08	Period 3 09
C-F-1	I136400		B-20	ISI	-	-	-	-	-	-	-
THIN	3		ELBOW-TO-PIPE	AUG	-	-	-	-	-	-	-
2	RHR			OWN	-	-	-	-	-	-	-
				PRE	-	-	-	-	-	-	-
C-F-1	I136800		B-20	ISI	-	-	-	-	-	-	-
THIN	4		PIPE-TO-PIPE	AUG	-	-	-	-	-	-	-
2	RHR			OWN	-	-	-	-	-	-	-
				PRE	-	-	-	-	-	-	-
C-F-1	I136900		B-20	ISI	-	-	-	-	-	-	-
THIN	5		PIPE-TO-TEE	AUG	-	-	-	-	-	-	-
2	RHR			OWN	-	-	-	-	-	-	-
				PRE	-	-	-	-	-	-	-
C-F-1	I137000	OWN/PT/PT-106	B-20A	ISI	-	-	-	-	-	-	-
THIN	1	OWN/UT/UT-208	PIPE-TO-TEE	AUG	-	-	-	-	-	-	-
2	RHR			OWN	-	-	c	-	-	-	-
				PRE	-	-	-	-	-	-	-
C-F-1	I137200		B-20A	ISI	-	-	-	-	-	-	-
THIN	2		VALVE(704A)-TO-PIPE	AUG	-	-	-	-	-	-	-
2	RHR			OWN	-	-	-	-	-	-	-
				PRE	-	-	-	-	-	-	-
C-F-1	I137300		B-20A	ISI	-	-	-	-	-	-	-
THIN	3		PIPE-TO-VALVE(704A)	AUG	-	-	-	-	-	-	-
2	RHR			OWN	-	-	-	-	-	-	-
				PRE	-	-	-	-	-	-	-
C-F-1	I137400		B-20A	ISI	-	-	-	-	-	-	-
THIN	4		TEE-TO-PIPE	AUG	-	-	-	-	-	-	-
2	RHR			OWN	-	-	-	-	-	-	-
				PRE	-	-	-	-	-	-	-
C-F-1	I137500	OWN/UT/UT-208	B-20A	ISI	-	-	-	-	-	-	-
THIN	5	OWN/PT/PT-106	TEE-TO-PIPE	AUG	-	-	-	-	-	-	-
2	RHR			OWN	c	-	-	-	-	-	-
				PRE	-	-	-	-	-	-	-
C-F-1	I137550		B-20A	ISI	-	-	-	-	-	-	-
THIN	5A		PIPE-TO-ELBOW	AUG	-	-	-	-	-	-	-
2	RHR			OWN	-	-	-	-	-	-	-
				PRE	-	-	-	-	-	-	-
C-F-1	I137600		B-20A	ISI	-	-	-	-	-	-	-
THIN	6		ELBOW-TO-PIPE	AUG	-	-	-	-	-	-	-
2	RHR			OWN	-	-	-	-	-	-	-
				PRE	-	-	-	-	-	-	-

Category, ItemNO, Class	Summary / CompID / System	Scope / Method / Procedure	Iso No. Comp. Desc. Code Case		Period 1 00	Period 1 02	Period 2 03	Period 2 05	Period 2 06	Period 3 08	Period 3 09
C-F-1	I137700		B-20A	ISI	-	-	-	-	-	-	-
THIN	7		PIPE-TO-ELBOW	AUG	-	-	-	-	-	-	-
2	RHR			OWN	-	-	-	-	-	-	-
				PRE	-	-	-	-	-	-	-
C-F-1	I138000		B-20A	ISI	-	-	-	-	-	-	-
THIN	8		ELBOW-TO-FLANGE (RHR PUMP A SUCT)	AUG	-	-	-	-	-	-	-
2	RHR			OWN	-	-	-	-	-	-	-
				PRE	-	-	-	-	-	-	-
C-F-1	I138100		B-20A	ISI	-	-	-	-	-	-	-
THIN	1		VALVE 850A-TO-ELBOW	AUG	-	-	-	-	-	-	-
2	RHR			OWN	-	-	-	-	-	-	-
				PRE	-	-	-	-	-	-	-
C-F-1	I138200		B-20A	ISI	-	-	-	-	-	-	-
THIN	2		ELBOW-TO-PIPE	AUG	-	-	-	-	-	-	-
2	RHR			OWN	-	-	-	-	-	-	-
				PRE	-	-	-	-	-	-	-
C-F-1	I138600		B-20A	ISI	-	-	-	-	-	-	-
THIN	3		PIPE-TO-PIPE	AUG	-	-	-	-	-	-	-
2	RHR			OWN	-	-	-	-	-	-	-
				PRE	-	-	-	-	-	-	-
C-F-1	I138700		B-20A	ISI	-	-	-	-	-	-	-
THIN	4		PIPE-TO-TEE	AUG	-	-	-	-	-	-	-
2	RHR			OWN	-	-	-	-	-	-	-
				PRE	-	-	-	-	-	-	-
C-F-1	I138800		B-23	ISI	-	-	-	-	-	-	-
THIN	1A		FLANGE-TO-REDUCER (RHR PUMP A OUT)	AUG	-	-	-	-	-	-	-
2	RHR			OWN	-	-	-	-	-	-	-
				PRE	-	-	-	-	-	-	-
C-F-1	I138900		B-23	ISI	-	-	-	-	-	-	-
THIN	1		REDUCER-TO-VALVE(710A)	AUG	-	-	-	-	-	-	-
2	RHR			OWN	-	-	-	-	-	-	-
				PRE	-	-	-	-	-	-	-
C-F-1	I139000		B-23	ISI	-	-	-	-	-	-	-
THIN	2		VALVE 710A-TO-PIPE	AUG	-	-	-	-	-	-	-
2	RHR			OWN	-	-	-	-	-	-	-
				PRE	-	-	-	-	-	-	-
C-F-1	I139100		B-23	ISI	-	-	-	-	-	-	-
THIN	3		PIPE-TO-VALVE(709A)	AUG	-	-	-	-	-	-	-
2	RHR			OWN	-	-	-	-	-	-	-
				PRE	-	-	-	-	-	-	-

Category, ItemNO, Class	Summary / CompID / System	Scope / Method / Procedure	Iso No. Comp. Desc. Code Case		Period 1 00	Period 1 02	Period 2 03	Period 2 05	Period 2 06	Period 3 08	Period 3 09
C-F-1	I139200		B-23	ISI	-	-	-	-	-	-	-
THIN	4		VALVE 709A-TO-ELBOW	AUG	-	-	-	-	-	-	-
2	RHR			OWN	-	-	-	-	-	-	-
				PRE	-	-	-	-	-	-	-
C-F-1	I139300		B-23	ISI	-	-	-	-	-	-	-
THIN	5		ELBOW-TO-ELBOW	AUG	-	-	-	-	-	-	-
2	RHR			OWN	-	-	-	-	-	-	-
				PRE	-	-	-	-	-	-	-
C-F-1	I139400		B-23	ISI	-	-	-	-	-	-	-
THIN	6		ELBOW-TO-PIPE	AUG	-	-	-	-	-	-	-
2	RHR			OWN	-	-	-	-	-	-	-
				PRE	-	-	-	-	-	-	-
C-F-1	I139600		B-23	ISI	-	-	-	-	-	-	-
THIN	7		PIPE-TO-PIPE	AUG	-	-	-	-	-	-	-
2	RHR			OWN	-	-	-	-	-	-	-
				PRE	-	-	-	-	-	-	-
C-F-1	I139700		B-23	ISI	-	-	-	-	-	-	-
THIN	8		PIPE-TO-ELBOW	AUG	-	-	-	-	-	-	-
2	RHR			OWN	-	-	-	-	-	-	-
				PRE	-	-	-	-	-	-	-
C-F-1	I139800		B-23	ISI	-	-	-	-	-	-	-
THIN	1		ELBOW-TO-TEE	AUG	-	-	-	-	-	-	-
2	RHR			OWN	-	-	-	-	-	-	-
				PRE	-	-	-	-	-	-	-
C-F-1	I139900		B-23	ISI	-	-	-	-	-	-	-
THIN	2		TEE-TO-PIPE	AUG	-	-	-	-	-	-	-
2	RHR			OWN	-	-	-	-	-	-	-
				PRE	-	-	-	-	-	-	-
C-F-1	I140100		B-23	ISI	-	-	-	-	-	-	-
THIN	3		PIPE-TO-ELBOW	AUG	-	-	-	-	-	-	-
2	RHR			OWN	-	-	-	-	-	-	-
				PRE	-	-	-	-	-	-	-
C-F-1	I140200		B-23	ISI	-	-	-	-	-	-	-
THIN	4		ELBOW-TO-PIPE	AUG	-	-	-	-	-	-	-
2	RHR			OWN	-	-	-	-	-	-	-
				PRE	-	-	-	-	-	-	-
C-F-1	I140300		B-23	ISI	-	-	-	-	-	-	-
THIN	5		PIPE-TO-ELBOW	AUG	-	-	-	-	-	-	-
2	RHR			OWN	-	-	-	-	-	-	-
				PRE	-	-	-	-	-	-	-

Category, ItemNO, Class	Summary / CompID / System	Scope / Method / Procedure	Iso No. Comp. Desc. Code Case		Period 1 00	Period 1 02	Period 2 03	Period 2 05	Period 2 06	Period 3 08	Period 3 09
C-F-1	I140400		B-23	ISI	-	-	-	-	-	-	-
THIN	6		ELBOW-TO-PIPE	AUG	-	-	-	-	-	-	-
2	RHR			OWN	-	-	-	-	-	-	-
				PRE	-	-	-	-	-	-	-
C-F-1	I140600		B-23	ISI	-	-	-	-	-	-	-
THIN	7		PIPE-TO-ELBOW	AUG	-	-	-	-	-	-	-
2	RHR			OWN	-	-	-	-	-	-	-
				PRE	-	-	-	-	-	-	-
C-F-1	I140700		B-23	ISI	-	-	-	-	-	-	-
THIN	8		ELBOW-TO-PIPE	AUG	-	-	-	-	-	-	-
2	RHR			OWN	-	-	-	-	-	-	-
				PRE	-	-	-	-	-	-	-
C-F-1	I140800		B-23	ISI	-	-	-	-	-	-	-
THIN	9		PIPE-TO-ELBOW	AUG	-	-	-	-	-	-	-
2	RHR			OWN	-	-	-	-	-	-	-
				PRE	-	-	-	-	-	-	-
C-F-1	I140900		B-23	ISI	-	-	-	-	-	-	-
THIN	10		ELBOW-TO-PIPE	AUG	-	-	-	-	-	-	-
2	RHR			OWN	-	-	-	-	-	-	-
				PRE	-	-	-	-	-	-	-
C-F-1	I141000		B-24	ISI	-	-	-	-	-	-	-
THIN	11		PIPE-TO-ELBOW	AUG	-	-	-	-	-	-	-
2	RHR			OWN	-	-	-	-	-	-	-
				PRE	-	-	-	-	-	-	-
C-F-1	I141100		B-24	ISI	-	-	-	-	-	-	-
THIN	12		ELBOW-TO-PIPE	AUG	-	-	-	-	-	-	-
2	RHR			OWN	-	-	-	-	-	-	-
				PRE	-	-	-	-	-	-	-
C-F-1	I141200		B-24	ISI	-	-	-	-	-	-	-
THIN	13		PIPE-TO-TEE	AUG	-	-	-	-	-	-	-
2	RHR			OWN	-	-	-	-	-	-	-
				PRE	-	-	-	-	-	-	-
C-F-1	I141300		B-24	ISI	-	-	-	-	-	-	-
THIN	14		TEE-TO-REDUCING ELBOW	AUG	-	-	-	-	-	-	-
2	RHR			OWN	-	-	-	-	-	-	-
				PRE	-	-	-	-	-	-	-
C-F-1	I141500		B-25	ISI	-	-	-	-	-	-	-
THIN	1A		REDUCING ELBOW-TO-PIPE	AUG	-	-	-	-	-	-	-
2	RHR			OWN	-	-	-	-	-	-	-
				PRE	-	-	-	-	-	-	-

Category, ItemNO, Class	Summary / CompID / System	Scope / Method / Procedure	Iso No. Comp. Desc. Code Case		Period 1 00	Period 1 02	Period 2 03	Period 2 05	Period 2 06	Period 3 08	Period 3 09
C-F-1	I141700		B-23	ISI	-	-	-	-	-	-	-
THIN	1		TEE-TO-PIPE	AUG	-	-	-	-	-	-	-
2	RHR			OWN	-	-	-	-	-	-	s
				PRE	-	-	-	-	-	-	-
C-F-1	I141750		B-23	ISI	-	-	-	-	-	-	-
THIN	1A		PIPE-TO-VALVE(709C)	AUG	-	-	-	-	-	-	-
2	RHR			OWN	-	-	-	-	-	-	-
				PRE	-	-	-	-	-	-	-
C-F-1	I141800		B-23	ISI	-	-	-	-	-	-	-
THIN	2		VALVE 709C-TO-PIPE	AUG	-	-	-	-	-	-	-
2	RHR			OWN	-	-	-	-	-	-	-
				PRE	-	-	-	-	-	-	-
C-F-1	I141900		B-23	ISI	-	-	-	-	-	-	-
THIN	3		PIPE-TO-VALVE(709D)	AUG	-	-	-	-	-	-	-
2	RHR			OWN	-	-	-	-	-	-	-
				PRE	-	-	-	-	-	-	-
C-F-1	I142000		B-23	ISI	-	-	-	-	-	-	-
THIN	4		VALVE 709D-TO-ELBOW	AUG	-	-	-	-	-	-	-
2	RHR			OWN	-	-	-	-	-	-	-
				PRE	-	-	-	-	-	-	-
C-F-1	I142100		B-23	ISI	-	-	-	-	-	-	-
THIN	5		ELBOW-TO-PIPE	AUG	-	-	-	-	-	-	-
2	RHR			OWN	-	-	-	-	-	-	-
				PRE	-	-	-	-	-	-	-
C-F-1	I142400		B-23	ISI	-	-	-	-	-	-	-
THIN	6		PIPE-TO-TEE	AUG	-	-	-	-	-	-	-
2	RHR			OWN	-	-	-	-	-	-	-
				PRE	-	-	-	-	-	-	-
C-F-1	I142500		B-23	ISI	-	-	-	-	-	-	-
THIN	7		TEE-TO-PIPE	AUG	-	-	-	-	-	-	-
2	RHR			OWN	-	-	-	-	-	-	-
				PRE	-	-	-	-	-	-	-
C-F-1	I142800		B-23	ISI	-	-	-	-	-	-	-
THIN	8		PIPE-TO-ELBOW	AUG	-	-	-	-	-	-	-
2	RHR			OWN	-	-	-	-	-	-	-
				PRE	-	-	-	-	-	-	-
C-F-1	I142900		B-23	ISI	-	-	-	-	-	-	-
THIN	9		ELBOW-TO-PIPE	AUG	-	-	-	-	-	-	-
2	RHR			OWN	-	-	-	-	-	-	-
				PRE	-	-	-	-	-	-	-

Category, ItemNO, Class	Summary / CompID / System	Scope / Method / Procedure	Iso No. Comp. Desc. Code Case		Period 1 00	Period 1 02	Period 2 03	Period 2 05	Period 2 06	Period 3 08	Period 3 09
C-F-1	I143000		B-23	ISI	-	-	-	-	-	-	-
THIN	10		PIPE-TO-ELBOW	AUG	-	-	-	-	-	-	-
2	RHR			OWN	-	-	-	-	-	-	-
				PRE	-	-	-	-	-	-	-
C-F-1	I143100		B-23	ISI	-	-	-	-	-	-	-
THIN	11		ELBOW-TO-PIPE	AUG	-	-	-	-	-	-	-
2	RHR			OWN	-	-	-	-	-	-	-
				PRE	-	-	-	-	-	-	-
C-F-1	I143200		B-24	ISI	-	-	-	-	-	-	-
THIN	12		PIPE-TO-ELBOW	AUG	-	-	-	-	-	-	-
2	RHR			OWN	-	-	-	-	-	s	-
				PRE	-	-	-	-	-	-	-
C-F-1	I143300		B-24	ISI	-	-	-	-	-	-	-
THIN	13		ELBOW-TO-PIPE	AUG	-	-	-	-	-	-	-
2	RHR			OWN	-	-	-	-	-	-	-
				PRE	-	-	-	-	-	-	-
C-F-1	I143400		B-24	ISI	-	-	-	-	-	-	-
THIN	14		PIPE-TO-PIPE	AUG	-	-	-	-	-	-	-
2	RHR			OWN	-	-	-	-	-	-	-
				PRE	-	-	-	-	-	-	-
C-F-1	I143600		B-24	ISI	-	-	-	-	-	-	-
THIN	15		PIPE-TO-ELBOW	AUG	-	-	-	-	-	-	-
2	RHR			OWN	-	-	-	-	-	-	-
				PRE	-	-	-	-	-	-	-
C-F-1	I143700		B-24	ISI	-	-	-	-	-	-	-
THIN	16		ELBOW-TO-PIPE	AUG	-	-	-	-	-	-	-
2	RHR			OWN	-	-	-	-	-	-	-
				PRE	-	-	-	-	-	-	-
C-F-1	I143800		B-24	ISI	-	-	-	-	-	-	-
THIN	17		PIPE-TO-ELBOW	AUG	-	-	-	-	-	-	-
2	RHR			OWN	-	-	-	-	-	-	-
				PRE	-	-	-	-	-	-	-
C-F-1	I143900		B-24	ISI	-	-	-	-	-	-	-
THIN	18		ELBOW-TO-VALVE(716)	AUG	-	-	-	-	-	-	-
2	RHR			OWN	-	-	-	-	-	-	-
				PRE	-	-	-	-	-	-	-
C-F-1	I144000		B-24	ISI	-	-	-	-	-	-	-
THIN	19		VALVE 716-TO-ELBOW	AUG	-	-	-	-	-	-	-
2	RHR			OWN	-	-	-	-	-	-	-
				PRE	-	-	-	-	-	-	-

Category, ItemNO, Class	Summary / CompID / System	Scope / Method / Procedure	Iso No. Comp. Desc. Code Case		Period 1 00	Period 1 02	Period 2 03	Period 2 05	Period 2 06	Period 3 08	Period 3 09
C-F-1	I144050		B-24	ISI	-	-	-	-	-	-	-
THIN	19A1		ELBOW-TO-PIPE	AUG	-	-	-	-	-	-	-
2	RHR			OWN	-	-	-	-	-	-	-
				PRE	-	-	-	-	-	-	-
C-F-1	I144300		B-24	ISI	-	-	-	-	-	-	-
THIN	20		PIPE-TO-ELBOW	AUG	-	-	-	-	-	-	-
2	RHR			OWN	-	-	-	-	-	-	-
				PRE	-	-	-	-	-	-	-
C-F-1	I144400		B-24	ISI	-	-	-	-	-	-	-
THIN	21		ELBOW-TO-NOZZLE (RHR HTX B)	AUG	-	-	-	-	-	-	-
2	RHR			OWN	-	-	-	-	-	-	-
				PRE	-	-	-	-	-	-	-
C-F-1	I144500		B-23	ISI	-	-	-	-	-	-	-
THIN	1		FLANGE-TO-REDUCER (RHR PUMP B OUT)	AUG	-	-	-	-	-	-	-
2	RHR			OWN	-	-	-	-	-	-	-
				PRE	-	-	-	-	-	-	-
C-F-1	I144600		B-23	ISI	-	-	-	-	-	-	-
THIN	2		REDUCER-TO-VALVE(710B)	AUG	-	-	-	-	-	-	-
2	RHR			OWN	-	-	-	-	-	-	-
				PRE	-	-	-	-	-	-	-
C-F-1	I144700		B-23	ISI	-	-	-	-	-	-	-
THIN	3		VALVE 710B-TO-PIPE	AUG	-	-	-	-	-	-	-
2	RHR			OWN	-	-	-	-	-	-	-
				PRE	-	-	-	-	-	-	-
C-F-1	I144800		B-23	ISI	-	-	-	-	-	-	-
THIN	4		PIPE-TO-VALVE(709B)	AUG	-	-	-	-	-	-	-
2	RHR			OWN	-	-	-	-	-	-	-
				PRE	-	-	-	-	-	-	-
C-F-1	I144900	OWN/PT/PT-106	B-23	ISI	-	-	-	-	-	-	-
THIN	5	OWN/UT/UT-208	VALVE 709B-TO-PIPE	AUG	-	-	-	-	-	-	-
2	RHR			OWN	-	-	c	-	-	-	-
				PRE	-	-	-	-	-	-	-
C-F-1	I144901		B-23	ISI	-	-	-	-	-	-	-
THIN	5A		PIPE-TO-TEE	AUG	-	-	-	-	-	-	-
2	RHR			OWN	-	-	-	-	-	-	-
				PRE	-	-	-	-	-	-	-
C-F-1	I145000		B-26	ISI	-	-	-	-	-	-	-
THIN	1A		NOZZLE-TO-ELBOW (RHR HTX A)	AUG	-	-	-	-	-	-	-
2	RHR			OWN	-	-	-	-	-	-	-
				PRE	-	-	-	-	-	-	-

Category, ItemNO, Class	Summary / CompID / System	Scope / Method / Procedure	Iso No. Comp. Desc. Code Case		Period 1 00	Period 1 02	Period 2 03	Period 2 05	Period 2 06	Period 3 08	Period 3 09
C-F-1	I145110		B-26	ISI	-	-	-	-	-	-	-
THIN	1AB		ELBOW-TO-PIPE	AUG	-	-	-	-	-	-	-
2	RHR			OWN	-	-	-	-	-	-	-
				PRE	-	-	-	-	-	-	-
C-F-1	I145210		B-26	ISI	-	-	-	-	-	-	-
THIN	1AC		PIPE-TO-TEE	AUG	-	-	-	-	-	-	-
2	RHR			OWN	-	-	-	-	-	-	-
				PRE	-	-	-	-	-	-	-
C-F-1	I145310		B-26	ISI	-	-	-	-	-	-	-
THIN	1AD		TEE-TO-ELBOW	AUG	-	-	-	-	-	-	-
2	RHR			OWN	-	-	-	-	-	-	-
				PRE	-	-	-	-	-	-	-
C-F-1	I145410		B-26	ISI	-	-	-	-	-	-	-
THIN	1AE		ELBOW-TO-REDUCER	AUG	-	-	-	-	-	-	-
2	RHR			OWN	-	-	-	-	-	-	-
				PRE	-	-	-	-	-	-	-
C-F-1	I145430		B-26	ISI	-	-	-	-	-	-	-
THIN	1AF		TEE-TO-VALVE(697A)	AUG	-	-	-	-	-	-	-
2	RHR			OWN	-	-	-	-	-	-	-
				PRE	-	-	-	-	-	-	-
C-F-1	I145460		B-26	ISI	-	-	-	-	-	-	-
THIN	1AG		VALVE(697A)-TO-PIPE	AUG	-	-	-	-	-	-	-
2	RHR			OWN	-	-	-	-	-	-	-
				PRE	-	-	-	-	-	-	-
C-F-1	I145500	OWN/PT/PT-106	B-26	ISI	-	-	-	-	-	-	-
THIN	1F	OWN/UT/UT-208	PIPE-TO-ELBOW	AUG	-	-	-	-	-	-	-
2	RHR			OWN	-	c	-	-	-	-	-
				PRE	-	-	-	-	-	-	-
C-F-1	I145800		B-26	ISI	-	-	-	-	-	-	-
THIN	2		ELBOW-TO-VALVE(625)	AUG	-	-	-	-	-	-	-
2	RHR			OWN	-	-	-	-	-	-	-
				PRE	-	-	-	-	-	-	-
C-F-1	I145825		B-26	ISI	-	-	-	-	-	-	-
THIN	2A		VALVE(625)-TO-VALVE(717)	AUG	-	-	-	-	-	-	-
2	RHR			OWN	-	-	-	-	-	-	-
				PRE	-	-	-	-	-	-	-
C-F-1	I145850		B-26	ISI	-	-	-	-	-	-	-
THIN	2B		VALVE 717-TO-PIPE	AUG	-	-	-	-	-	-	-
2	RHR			OWN	-	-	-	-	-	-	-
				PRE	-	-	-	-	-	-	-

Category, ItemNO, Class	Summary / CompID / System	Scope / Method / Procedure	Iso No. Comp. Desc. Code Case		Period 1 00	Period 1 02	Period 2 03	Period 2 05	Period 2 06	Period 3 08	Period 3 09
C-F-1	I145875		B-26	ISI	-	-	-	-	-	-	-
THIN	2C		PIPE-TO-REDUCER	AUG	-	-	-	-	-	-	-
2	RHR			OWN	-	-	-	-	-	-	-
				PRE	-	-	-	-	-	-	-
C-F-1	I145880		B-25	ISI	-	-	-	-	-	-	-
THIN	A		REDUCER-TO-TEE	AUG	-	-	-	-	-	-	-
2	RHR			OWN	-	-	-	-	-	-	-
				PRE	-	-	-	-	-	-	-
C-F-1	I146200		B-25	ISI	-	-	-	-	-	-	-
THIN	B		TEE-TO-REDUCER	AUG	-	-	-	-	-	-	-
2	RHR			OWN	-	-	-	-	-	-	-
				PRE	-	-	-	-	-	-	-
C-F-1	I146300		B-26	ISI	-	-	-	-	-	-	-
THIN	5		REDUCER-TO-VALVE(715)	AUG	-	-	-	-	-	-	-
2	RHR			OWN	-	-	-	-	-	-	-
				PRE	-	-	-	-	-	-	-
C-F-1	I146400		B-26	ISI	-	-	-	-	-	-	-
THIN	6		VALVE 715-TO-PIPE	AUG	-	-	-	-	-	-	-
2	RHR			OWN	-	-	-	-	-	-	-
				PRE	-	-	-	-	-	-	-
C-F-1	I146425		B-26	ISI	-	-	-	-	-	-	-
THIN	7		PIPE-TO-VALVE(624)	AUG	-	-	-	-	-	-	-
2	RHR			OWN	-	-	-	-	-	-	-
				PRE	-	-	-	-	-	-	-
C-F-1	I146450		B-26	ISI	-	-	-	-	-	-	-
THIN	8		VALVE(624)-TO-TEE	AUG	-	-	-	-	-	-	-
2	RHR			OWN	-	-	-	-	-	-	-
				PRE	-	-	-	-	-	-	-
C-F-1	I146500		B-26	ISI	-	-	-	-	-	-	-
THIN	9		TEE-TO-REDUCING ELBOW	AUG	-	-	-	-	-	-	-
2	RHR			OWN	-	-	-	-	-	-	-
				PRE	-	-	-	-	-	-	-
C-F-1	I146800		B-26	ISI	-	-	-	-	-	-	-
THIN	2		ELBOW-TO-PIPE	AUG	-	-	-	-	-	-	-
2	RHR			OWN	-	-	-	-	-	-	-
				PRE	-	-	-	-	-	-	-
C-F-1	I146900		B-26	ISI	-	-	-	-	-	-	-
THIN	3		PIPE-TO-ELBOW	AUG	-	-	-	-	-	-	-
2	RHR			OWN	-	-	-	-	-	s	-
				PRE	-	-	-	-	-	-	-

Category, ItemNO, Class	Summary / CompID / System	Scope / Method / Procedure	Iso No. Comp. Desc. Code Case		Period 1 00	Period 1 02	Period 2 03	Period 2 05	Period 2 06	Period 3 08	Period 3 09
C-F-1	I147000		B-26	ISI	-	-	-	-	-	-	-
THIN	4		ELBOW-TO-PIPE	AUG	-	-	-	-	-	-	-
2	RHR			OWN	-	-	-	-	-	-	-
				PRE	-	-	-	-	-	-	-
C-F-1	I148000		B-26	ISI	-	-	-	-	-	-	-
THIN	5		PIPE-TO-ELBOW	AUG	-	-	-	-	-	-	-
2	RHR			OWN	-	-	-	-	-	-	-
				PRE	-	-	-	-	-	-	-
C-F-1	I148100		B-26	ISI	-	-	-	-	-	-	-
THIN	6		ELBOW-TO-ELBOW	AUG	-	-	-	-	-	-	-
2	RHR			OWN	-	-	-	-	-	-	-
				PRE	-	-	-	-	-	-	-
C-F-1	I148200		B-26	ISI	-	-	-	-	-	-	-
THIN	7		ELBOW-TO-PIPE	AUG	-	-	-	-	-	-	-
2	RHR			OWN	-	-	-	-	-	-	-
				PRE	-	-	-	-	-	-	-
C-F-1	I148400		B-26	ISI	-	-	-	-	-	-	-
THIN	8		PIPE-TO-FLANGE	AUG	-	-	-	-	-	-	-
2	RHR			OWN	-	-	-	-	-	-	-
				PRE	-	-	-	-	-	-	-
C-F-1	I148500		B-26	ISI	-	-	-	-	-	-	-
THIN	9		FLANGE-TO-PIPE	AUG	-	-	-	-	-	-	-
2	RHR			OWN	-	-	-	-	-	-	-
				PRE	-	-	-	-	-	-	-
C-F-1	I148800		B-26	ISI	-	-	-	-	-	-	-
THIN	10		PIPE-TO-ELBOW	AUG	-	-	-	-	-	-	-
2	RHR			OWN	-	-	-	-	-	-	-
				PRE	-	-	-	-	-	-	-
C-F-1	I148900		B-26	ISI	-	-	-	-	-	-	-
THIN	11		ELBOW-TO-PIPE	AUG	-	-	-	-	-	-	-
2	RHR			OWN	-	-	-	-	-	-	-
				PRE	-	-	-	-	-	-	-
C-F-1	I149000		B-26	ISI	-	-	-	-	-	-	-
THIN	12		PIPE-TO-PIPE	AUG	-	-	-	-	-	-	-
2	RHR			OWN	-	-	-	-	-	-	-
				PRE	-	-	-	-	-	-	-
C-F-1	I149100		B-26	ISI	-	-	-	-	-	-	-
THIN	13		PIPE-TO-ELBOW	AUG	-	-	-	-	-	-	-
2	RHR			OWN	-	-	-	-	-	-	-
				PRE	-	-	-	-	-	-	-

Category, ItemNO, Class	Summary / CompID / System	Scope / Method / Procedure	Iso No. Comp. Desc. Code Case		Period 1 00	Period 1 02	Period 2 03	Period 2 05	Period 2 06	Period 3 08	Period 3 09
C-F-1	I149200		B-26	ISI	-	-	-	-	-	-	-
THIN	14		ELBOW-TO-45 ELBOW	AUG	-	-	-	-	-	-	-
2	RHR			OWN	-	-	-	-	-	-	-
				PRE	-	-	-	-	-	-	-
C-F-1	I149250		B-26	ISI	-	-	-	-	-	-	-
THIN	14A		45 ELBOW-TO-PIPE	AUG	-	-	-	-	-	-	-
2	RHR			OWN	-	-	-	-	-	-	-
				PRE	-	-	-	-	-	-	-
C-F-1	I149300		B-26	ISI	-	-	-	-	-	-	-
THIN	15		PIPE-TO-45 ELBOW	AUG	-	-	-	-	-	-	-
2	RHR			OWN	-	-	-	-	-	-	-
				PRE	-	-	-	-	-	-	-
C-F-1	I149400		B-26	ISI	-	-	-	-	-	-	-
THIN	16		ELBOW-TO-PIPE	AUG	-	-	-	-	-	-	-
2	RHR			OWN	-	-	-	-	-	-	-
				PRE	-	-	-	-	-	-	-
C-F-1	I149500		B-26	ISI	-	-	-	-	-	-	-
THIN	17		PIPE-TO-ELBOW	AUG	-	-	-	-	-	-	-
2	RHR			OWN	-	-	-	-	-	-	-
				PRE	-	-	-	-	-	-	-
C-F-1	I149800		B-26	ISI	-	-	-	-	-	-	-
THIN	18		ELBOW-TO-PIPE	AUG	-	-	-	-	-	-	-
2	RHR			OWN	-	-	-	-	-	-	-
				PRE	-	-	-	-	-	-	-
C-F-1	I149900		B-26	ISI	-	-	-	-	-	-	-
THIN	19		PIPE-TO-VALVE(857B)	AUG	-	-	-	-	-	-	-
2	RHR			OWN	-	-	-	-	-	-	-
				PRE	-	-	-	-	-	-	-
C-F-1	I150000		B-19	ISI	-	-	-	-	-	-	-
THIN	20		VALVE 857B-TO-TEE	AUG	-	-	-	-	-	-	-
2	HPSI			OWN	-	-	-	-	-	-	-
				PRE	-	-	-	-	-	-	-
C-F-1	I150200		B-25	ISI	-	-	-	-	-	-	-
THIN	1		PIPE-TO-ELBOW	AUG	-	-	-	-	-	-	-
2	RHR			OWN	-	-	-	-	-	-	-
				PRE	-	-	-	-	-	-	-
C-F-1	I150300		B-25	ISI	-	-	-	-	-	-	-
THIN	2		ELBOW-TO-VALVE(712A)	AUG	-	-	-	-	-	-	-
2	RHR			OWN	-	-	-	-	-	s	-
				PRE	-	-	-	-	-	-	-

Category, ItemNO, Class	Summary / CompID / System	Scope / Method / Procedure	Iso No. Comp. Desc. Code Case		Period 1 00	Period 1 02	Period 2 03	Period 2 05	Period 2 06	Period 3 08	Period 3 09
C-F-1	I150400		B-25	ISI	-	-	-	-	-	-	-
THIN	3		VALVE 712A-TO-PIPE	AUG	-	-	-	-	-	-	-
2	RHR			OWN	-	-	-	-	-	-	-
				PRE	-	-	-	-	-	-	-
C-F-1	I150500		B-25	ISI	-	-	-	-	-	-	-
THIN	4		PIPE-TO-ELBOW	AUG	-	-	-	-	-	-	-
2	RHR			OWN	-	-	-	-	-	-	-
				PRE	-	-	-	-	-	-	-
C-F-1	I150800		B-25	ISI	-	-	-	-	-	-	-
THIN	5		ELBOW-TO-PIPE	AUG	-	-	-	-	-	-	-
2	RHR			OWN	-	-	-	-	-	-	-
				PRE	-	-	-	-	-	-	-
C-F-1	I150900		B-25	ISI	-	-	-	-	-	-	-
THIN	6		PIPE-TO-VALVE(626)	AUG	-	-	-	-	-	-	-
2	RHR			OWN	-	-	-	-	-	-	-
				PRE	-	-	-	-	-	-	-
C-F-1	I150950		B-25	ISI	-	-	-	-	-	-	-
THIN	6A		VALVE(626)-TO-VALVE(712B)	AUG	-	-	-	-	-	-	-
2	RHR			OWN	-	-	-	-	-	-	-
				PRE	-	-	-	-	-	-	-
C-F-1	I151000		B-25	ISI	-	-	-	-	-	-	-
THIN	7		VALVE 712B-TO-ELBOW	AUG	-	-	-	-	-	-	-
2	RHR			OWN	-	-	-	-	-	-	-
				PRE	-	-	-	-	-	-	-
C-F-1	I151300		B-25	ISI	-	-	-	-	-	-	-
THIN	8		ELBOW-TO-PIPE	AUG	-	-	-	-	-	-	-
2	RHR			OWN	-	-	-	-	-	-	-
				PRE	-	-	-	-	-	-	-
C-F-1	I151400		B-25	ISI	-	-	-	-	-	-	-
THIN	9		PIPE-TO-ELBOW	AUG	-	-	-	-	-	-	-
2	RHR			OWN	-	-	-	-	-	-	-
				PRE	-	-	-	-	-	-	-
C-F-1	I151500		B-25	ISI	-	-	-	-	-	-	-
THIN	10		ELBOW-TO-PIPE	AUG	-	-	-	-	-	-	-
2	RHR			OWN	-	-	-	-	-	-	-
				PRE	-	-	-	-	-	-	-
C-F-1	I151600		B-25	ISI	-	-	-	-	-	-	-
THIN	11		PIPE-TO-REDUCER	AUG	-	-	-	-	-	-	-
2	RHR			OWN	-	-	-	-	-	-	-
				PRE	-	-	-	-	-	-	-

Category, ItemNO, Class	Summary / CompID / System	Scope / Method / Procedure	Iso No. Comp. Desc. Code Case		Period 1 00	Period 1 02	Period 2 03	Period 2 05	Period 2 06	Period 3 08	Period 3 09
C-F-1	I151700	OWN/PT/PT-106	B-25	ISI	-	-	-	-	-	-	-
THIN	1	OWN/UT/UT-208	TEE-TO-PIPE	AUG	-	-	-	-	-	-	-
2	RHR			OWN	-	-	-	-	-	s	-
				PRE	-	-	-	-	-	-	-
C-F-1	I151800		B-25	ISI	-	-	-	-	-	-	-
THIN	2		PIPE-TO-TEE	AUG	-	-	-	-	-	-	-
2	RHR			OWN	-	-	-	-	-	-	-
				PRE	-	-	-	-	-	-	-
C-F-1	I151900		B-25	ISI	-	-	-	-	-	-	-
THIN	3		REDUCER-TO-TEE	AUG	-	-	-	-	-	-	-
2	RHR			OWN	-	-	-	-	-	-	-
				PRE	-	-	-	-	-	-	-
C-F-1	I152000		B-25	ISI	-	-	-	-	-	-	-
THIN	4		TEE-TO-PIPE	AUG	-	-	-	-	-	-	-
2	RHR			OWN	-	-	-	-	-	-	-
				PRE	-	-	-	-	-	-	-
C-F-1	I152100		B-25	ISI	-	-	-	-	-	-	-
THIN	5		PIPE-TO-ELBOW	AUG	-	-	-	-	-	-	-
2	RHR			OWN	-	-	-	-	-	-	-
				PRE	-	-	-	-	-	-	-
C-F-1	I152200		B-25	ISI	-	-	-	-	-	-	-
THIN	6		ELBOW-TO-PIPE	AUG	-	-	-	-	-	-	-
2	RHR			OWN	-	-	-	-	-	-	-
				PRE	-	-	-	-	-	-	-
C-F-1	I152400		B-25	ISI	-	-	-	-	-	-	-
THIN	7		PIPE-TO-PIPE	AUG	-	-	-	-	-	-	-
2	RHR			OWN	-	-	-	-	-	-	-
				PRE	-	-	-	-	-	-	-
C-F-1	I152600		B-25	ISI	-	-	-	-	-	-	-
THIN	8		PIPE-TO-FLANGE	AUG	-	-	-	-	-	-	-
2	RHR			OWN	-	-	-	-	-	-	-
				PRE	-	-	-	-	-	-	-
C-F-1	I152700		B-25	ISI	-	-	-	-	-	-	-
THIN	9		FLANGE-TO-PIPE	AUG	-	-	-	-	-	-	-
2	RHR			OWN	-	-	-	-	-	-	-
				PRE	-	-	-	-	-	-	-
C-F-1	I152900		B-25	ISI	-	-	-	-	-	-	-
THIN	10		PIPE-TO-ELBOW	AUG	-	-	-	-	-	-	-
2	RHR			OWN	-	-	-	-	-	-	-
				PRE	-	-	-	-	-	-	-

Category, ItemNO, Class	Summary / CompID / System	Scope / Method / Procedure	Iso No. Comp. Desc. Code Case		Period 1 00	Period 1 02	Period 2 03	Period 2 05	Period 2 06	Period 3 08	Period 3 09
C-F-1	I153000		B-25	ISI	-	-	-	-	-	-	-
THIN	11		ELBOW-TO-PIPE	AUG	-	-	-	-	-	-	-
2	RHR			OWN	-	-	-	-	-	-	-
				PRE	-	-	-	-	-	-	-
C-F-1	I153100		B-25	ISI	-	-	-	-	-	-	-
THIN	12		PIPE-TO-ELBOW	AUG	-	-	-	-	-	-	-
2	RHR			OWN	-	-	-	-	-	-	-
				PRE	-	-	-	-	-	-	-
C-F-1	I153400		B-25	ISI	-	-	-	-	-	-	-
THIN	13		ELBOW-TO-PIPE (PEN 111)	AUG	-	-	-	-	-	-	-
2	RHR			OWN	-	-	-	-	-	-	-
				PRE	-	-	-	-	-	-	-
C-F-1	I153510		B-27	ISI	-	-	-	-	-	-	-
THIN	1AA		REDUCER-TO-PIPE	AUG	-	-	-	-	-	-	-
2	RHR			OWN	-	-	-	-	-	-	-
				PRE	-	-	-	-	-	-	-
C-F-1	I153610		B-27	ISI	-	-	-	-	-	-	-
THIN	1BB		PIPE-TO-ELBOW	AUG	-	-	-	-	-	-	-
2	RHR			OWN	-	-	-	-	-	-	-
				PRE	-	-	-	-	-	-	-
C-F-1	I153710		B-27	ISI	-	-	-	-	-	-	-
THIN	1CC		ELBOW-TO-PIPE	AUG	-	-	-	-	-	-	-
2	RHR			OWN	-	-	-	-	-	-	-
				PRE	-	-	-	-	-	-	-
C-F-1	I153950		B-27	ISI	-	-	-	-	-	-	-
THIN	1DD		PIPE-TO-ELBOW	AUG	-	-	-	-	-	-	-
2	RHR			OWN	-	-	-	-	-	-	-
				PRE	-	-	-	-	-	-	-
C-F-1	I154050		B-27	ISI	-	-	-	-	-	-	-
THIN	1EE		ELBOW-TO-PIPE	AUG	-	-	-	-	-	-	-
2	RHR			OWN	-	-	-	-	-	-	-
				PRE	-	-	-	-	-	-	-
C-F-1	I154110		B-27	ISI	-	-	-	-	-	-	-
THIN	1FF		PIPE-TO-PIPE	AUG	-	-	-	-	-	-	-
2	RHR			OWN	-	-	-	-	-	-	-
				PRE	-	-	-	-	-	-	-
C-F-1	I154125		B-27	ISI	-	-	-	-	-	-	-
THIN	1G		PIPE-TO-ELBOW	AUG	-	-	-	-	-	-	-
2	RHR			OWN	-	-	-	-	-	-	-
				PRE	-	-	-	-	-	-	-

Category, ItemNO, Class	Summary / CompID / System	Scope / Method / Procedure	Iso No. Comp. Desc. Code Case		Period 1 00	Period 1 02	Period 2 03	Period 2 05	Period 2 06	Period 3 08	Period 3 09
C-F-1	I154200		B-27	ISI	-	-	-	-	-	-	-
THIN	1H		ELBOW-TO-PIPE	AUG	-	-	-	-	-	-	-
2	RHR			OWN	-	-	-	-	-	-	-
				PRE	-	-	-	-	-	-	-
C-F-1	I154225		B-27	ISI	-	-	-	-	-	-	-
THIN	1J		PIPE-TO-ELBOW	AUG	-	-	-	-	-	-	-
2	RHR			OWN	-	-	-	-	-	-	-
				PRE	-	-	-	-	-	-	-
C-F-1	I154300		B-27	ISI	-	-	-	-	-	-	-
THIN	1K		ELBOW-TO-PIPE	AUG	-	-	-	-	-	-	-
2	RHR			OWN	-	-	-	-	-	-	-
				PRE	-	-	-	-	-	-	-
C-F-1	I154400		B-27	ISI	-	-	-	-	-	-	-
THIN	1L		PIPE-TO-ELBOW	AUG	-	-	-	-	-	-	-
2	RHR			OWN	-	-	-	-	-	-	-
				PRE	-	-	-	-	-	-	-
C-F-1	I154700		B-27	ISI	-	-	-	-	-	-	-
THIN	1M		ELBOW-TO-PIPE	AUG	-	-	-	-	-	-	-
2	RHR			OWN	-	-	-	-	-	-	-
				PRE	-	-	-	-	-	-	-
C-F-1	I155300		B-27	ISI	-	-	-	-	-	-	-
THIN	1		PIPE-TO-ELBOW	AUG	-	-	-	-	-	-	-
2	RHR			OWN	-	-	-	-	-	-	-
				PRE	-	-	-	-	-	-	-
C-F-1	I155400		B-27	ISI	-	-	-	-	-	-	-
THIN	2		ELBOW-TO-PIPE	AUG	-	-	-	-	-	-	-
2	RHR			OWN	-	-	-	-	-	-	-
				PRE	-	-	-	-	-	-	-
C-F-1	I155500		B-27	ISI	-	-	-	-	-	-	-
THIN	3		PIPE-TO-ELBOW	AUG	-	-	-	-	-	-	-
2	RHR			OWN	-	-	-	-	-	-	-
				PRE	-	-	-	-	-	-	-
C-F-1	I155600		B-27	ISI	-	-	-	-	-	-	-
THIN	4		ELBOW-TO-PIPE	AUG	-	-	-	-	-	-	-
2	RHR			OWN	-	-	-	-	-	-	-
				PRE	-	-	-	-	-	-	-
C-F-1	I155800		B-27	ISI	-	-	-	-	-	-	-
THIN	5		PIPE-TO-FLANGE	AUG	-	-	-	-	-	-	-
2	RHR			OWN	-	-	-	-	-	-	-
				PRE	-	-	-	-	-	-	-

Category, ItemNO, Class	Summary / CompID / System	Scope / Method / Procedure	Iso No. Comp. Desc. Code Case		Period 1 00	Period 1 02	Period 2 03	Period 2 05	Period 2 06	Period 3 08	Period 3 09
C-F-1	I155900		B-27	ISI	-	-	-	-	-	-	-
THIN	6		FLANGE-TO-PIPE	AUG	-	-	-	-	-	-	-
2	RHR			OWN	-	-	-	-	-	-	-
				PRE	-	-	-	-	-	-	-
C-F-1	I156200		B-27	ISI	-	-	-	-	-	-	-
THIN	7		PIPE-TO-ELBOW	AUG	-	-	-	-	-	-	-
2	RHR			OWN	-	-	-	-	-	-	-
				PRE	-	-	-	-	-	-	-
C-F-1	I156300		B-27	ISI	-	-	-	-	-	-	-
THIN	8		ELBOW-TO-PIPE	AUG	-	-	-	-	-	-	-
2	RHR			OWN	-	-	-	-	-	-	-
				PRE	-	-	-	-	-	-	-
C-F-1	I156400		B-27	ISI	-	-	-	-	-	-	-
THIN	9		PIPE-TO-ELBOW	AUG	-	-	-	-	-	-	-
2	RHR			OWN	-	-	-	-	-	-	-
				PRE	-	-	-	-	-	-	-
C-F-1	I156500		B-27	ISI	-	-	-	-	-	-	-
THIN	10		ELBOW-TO-PIPE	AUG	-	-	-	-	-	-	-
2	RHR			OWN	-	-	-	-	-	-	-
				PRE	-	-	-	-	-	-	-
C-F-1	I156600		B-27	ISI	-	-	-	-	-	-	-
THIN	11		PIPE-TO-TEE	AUG	-	-	-	-	-	-	-
2	RHR			OWN	-	-	-	-	-	-	-
				PRE	-	-	-	-	-	-	-
C-F-1	I156700		B-27	ISI	-	-	-	-	-	-	-
THIN	12		TEE-TO-PIPE	AUG	-	-	-	-	-	-	-
2	RHR			OWN	-	-	-	-	-	-	-
				PRE	-	-	-	-	-	-	-
C-F-1	I156800		B-27	ISI	-	-	-	-	-	-	-
THIN	13		PIPE-TO-ELBOW	AUG	-	-	-	-	-	-	-
2	RHR			OWN	-	-	-	-	-	-	-
				PRE	-	-	-	-	-	-	-
C-F-1	I157100		B-27	ISI	-	-	-	-	-	-	-
THIN	14		ELBOW-TO-PIPE	AUG	-	-	-	-	-	-	-
2	RHR			OWN	-	-	-	-	-	-	-
				PRE	-	-	-	-	-	-	-
C-F-1	I157200		B-27	ISI	-	-	-	-	-	-	-
THIN	15		PIPE-TO-VALVE(857A)	AUG	-	-	-	-	-	-	-
2	RHR			OWN	-	-	-	-	-	-	-
				PRE	-	-	-	-	-	-	-

Category, ItemNO, Class	Summary / CompID / System	Scope / Method / Procedure	Iso No. Comp. Desc. Code Case		Period 1 00	Period 1 02	Period 2 03	Period 2 05	Period 2 06	Period 3 08	Period 3 09
C-F-1	I157300		B-27	ISI	-	-	-	-	-	-	-
THIN	16		VALVE 857A-TO-PIPE	AUG	-	-	-	-	-	-	-
2	RHR			OWN	-	-	-	-	-	-	-
				PRE	-	-	-	-	-	-	-
C-F-1	I157400		B-19	ISI	-	-	-	-	-	-	-
THIN	17		PIPE-TO-VALVE(857C)	AUG	-	-	-	-	-	-	-
2	RHR			OWN	-	-	-	-	s	-	-
				PRE	-	-	-	-	-	-	-
C-F-1	I157500		B-19	ISI	-	-	-	-	-	-	-
THIN	18		VALVE 857C-TO-ELBOW	AUG	-	-	-	-	-	-	-
2	HPSI			OWN	-	-	-	-	-	-	-
				PRE	-	-	-	-	-	-	-
C-F-1	I157600		B-19	ISI	-	-	-	-	-	-	-
THIN	19		ELBOW-TO-REDUCER	AUG	-	-	-	-	-	-	-
2	HPSI			OWN	-	-	-	-	-	-	-
				PRE	-	-	-	-	-	-	-
C-F-1	I157700		B-24	ISI	-	-	-	-	-	-	-
THIN	1		TEE-TO-PIPE	AUG	-	-	-	-	-	-	-
2	RHR			OWN	-	-	-	-	-	-	-
				PRE	-	-	-	-	-	-	-
C-F-1	I157800		B-24	ISI	-	-	-	-	-	-	-
THIN	2		PIPE-TO-ELBOW	AUG	-	-	-	-	-	-	-
2	RHR			OWN	-	-	-	-	-	-	-
				PRE	-	-	-	-	-	-	-
C-F-1	I157900		B-24	ISI	-	-	-	-	-	-	-
THIN	3		ELBOW-TO-VALVE(714)	AUG	-	-	-	-	-	-	-
2	RHR			OWN	-	-	-	-	-	-	-
				PRE	-	-	-	-	-	-	-
C-F-1	I158100		B-24	ISI	-	-	-	-	-	-	-
THIN	5		VALVE 714-TO-ELBOW	AUG	-	-	-	-	-	-	-
2	RHR			OWN	-	-	-	-	-	-	-
				PRE	-	-	-	-	-	-	-
C-F-1	I158200		B-24	ISI	-	-	-	-	-	-	-
THIN	6		ELBOW-TO-PIPE	AUG	-	-	-	-	-	-	-
2	RHR			OWN	-	-	-	-	-	-	-
				PRE	-	-	-	-	-	-	-
C-F-1	I158300		B-24	ISI	-	-	-	-	-	-	-
THIN	7		PIPE-TO-ELBOW	AUG	-	-	-	-	-	-	-
2	RHR			OWN	-	-	-	-	-	-	-
				PRE	-	-	-	-	-	-	-

Category, ItemNO, Class	Summary / CompID / System	Scope / Method / Procedure	Iso No. Comp. Desc. Code Case		Period 1 00	Period 1 02	Period 2 03	Period 2 05	Period 2 06	Period 3 08	Period 3 09
C-F-1	I158400	OWN/PT/PT-106	B-24	ISI	-	-	-	-	-	-	-
THIN	8	OWN/UT/UT-208	ELBOW-TO-NOZZLE (RHR HTX A)	AUG	-	-	-	-	-	-	-
2	RHR			OWN	-	-	c	-	-	-	-
				PRE	-	-	-	-	-	-	-
C-F-1	I158500		B-26	ISI	-	-	-	-	-	-	-
THIN	1		NOZZLE-TO-ELBOW (RHR HTX B)	AUG	-	-	-	-	-	-	-
2	RHR			OWN	-	-	-	-	-	-	-
				PRE	-	-	-	-	-	-	-
C-F-1	I158560		B-26	ISI	-	-	-	-	-	-	-
THIN	1A		ELBOW-TO-PIPE	AUG	-	-	-	-	-	-	-
2	RHR			OWN	-	-	-	-	-	-	-
				PRE	-	-	-	-	-	-	-
C-F-1	I158630	OWN/PT/PT-106	B-26	ISI	-	-	-	-	-	-	-
THIN	2A	OWN/UT/UT-208	PIPE-TO-TEE	AUG	-	-	-	-	-	-	-
2	RHR			OWN	-	-	c	-	-	-	-
				PRE	-	-	-	-	-	-	-
C-F-1	I158660		B-26	ISI	-	-	-	-	-	-	-
THIN	2AB		TEE-TO-ELBOW	AUG	-	-	-	-	-	-	-
2	RHR			OWN	-	-	-	-	-	-	-
				PRE	-	-	-	-	-	-	-
C-F-1	I158730		B-26	ISI	-	-	-	-	-	-	-
THIN	2AC		ELBOW-TO-REDUCER	AUG	-	-	-	-	-	-	-
2	RHR			OWN	-	-	-	-	-	-	-
				PRE	-	-	-	-	-	-	-
C-F-1	I158760		B-26	ISI	-	-	-	-	-	-	-
THIN	2AD		REDUCER-TO-REDUCER	AUG	-	-	-	-	-	-	-
2	RHR			OWN	-	-	-	-	-	-	-
				PRE	-	-	-	-	-	-	-
C-F-1	I158830		B-26	ISI	-	-	-	-	-	-	-
THIN	3A		TEE-TO-VALVE(697B)	AUG	-	-	-	-	-	-	-
2	RHR			OWN	-	-	-	-	-	-	-
				PRE	-	-	-	-	-	-	-
C-F-1	I158860		B-26	ISI	-	-	-	-	-	-	-
THIN	4A		VALVE(697B)-TO-PIPE	AUG	-	-	-	-	-	-	-
2	RHR			OWN	-	-	-	-	-	-	-
				PRE	-	-	-	-	-	-	-
C-F-1	I158900		B-26	ISI	-	-	-	-	-	-	-
THIN	5		PIPE-TO-TEE	AUG	-	-	-	-	-	-	-
2	RHR			OWN	-	-	-	-	-	-	-
				PRE	-	-	-	-	-	-	-

Category, ItemNO, Class	Summary / CompID / System	Scope / Method / Procedure	Iso No. Comp. Desc. Code Case		Period 1 00	Period 1 02	Period 2 03	Period 2 05	Period 2 06	Period 3 08	Period 3 09
C-F-1	I159000		B-19	ISI	-	-	-	-	-	-	-
THIN	A1		PIPE-TO-ELBOW	AUG	-	-	-	-	-	-	-
2	CS			OWN	-	-	-	-	-	-	-
				PRE	-	-	-	-	-	-	-
C-F-1	I159200		B-19	ISI	-	-	-	-	-	-	-
THIN	A2		ELBOW-TO-PIPE	AUG	-	-	-	-	-	-	-
2	CS			OWN	-	-	-	-	-	-	-
				PRE	-	-	-	-	-	-	-
C-F-1	I159300		B-19	ISI	-	-	-	-	-	-	-
THIN	A3		PIPE-TO-ELBOW	AUG	-	-	-	-	-	-	-
2	CS			OWN	-	-	-	-	-	-	-
				PRE	-	-	-	-	-	-	-
C-F-1	I159400	OWN/PT/PT-106	B-19	ISI	-	-	-	-	-	-	-
THIN	A4	OWN/UT/UT-208	ELBOW-TO-PIPE	AUG	-	-	-	-	-	-	-
2	CS			OWN	-	-	-	-	-	s	-
				PRE	-	-	-	-	-	-	-
C-F-1	I159500		B-19	ISI	-	-	-	-	-	-	-
THIN	A5		PIPE-TO-TEE	AUG	-	-	-	-	-	-	-
2	CS			OWN	-	-	-	-	-	-	-
				PRE	-	-	-	-	-	-	-
C-F-1	I159600		B-19	ISI	-	-	-	-	-	-	-
THIN	A6		TEE-TO-REDUCER	AUG	-	-	-	-	-	-	-
2	CS			OWN	-	-	-	-	-	-	-
				PRE	-	-	-	-	-	-	-
C-F-1	I159700	OWN/PT/PT-106	B-19	ISI	-	-	-	-	-	-	-
THIN	7	OWN/UT/UT-201	TEE-TO-PIPE	AUG	-	-	-	-	-	-	-
2	CS			OWN	-	c	-	-	-	-	-
				PRE	-	-	-	-	-	-	-
C-F-1	I159750		B-19	ISI	-	-	-	-	-	-	-
THIN	7A		TEE-TO-PIPE	AUG	-	-	-	-	-	-	-
2	CS			OWN	-	-	-	-	-	-	-
				PRE	-	-	-	-	-	-	-
C-F-1	I159800		B-19	ISI	-	-	-	-	-	-	-
THIN	8		PIPE-TO-VALVE(858A)	AUG	-	-	-	-	-	-	-
2	CS			OWN	-	-	-	-	-	-	-
				PRE	-	-	-	-	-	-	-
C-F-1	I159820		B-19	ISI	-	-	-	-	-	-	-
THIN	9		VALVE 858A TO REDUCER	AUG	-	-	-	-	-	-	-
2	CS			OWN	-	-	-	-	-	-	-
				PRE	-	-	-	-	-	-	-

Category, ItemNO, Class	Summary / CompID / System	Scope / Method / Procedure	Iso No. Comp. Desc. Code Case		Period 1 00	Period 1 02	Period 2 03	Period 2 05	Period 2 06	Period 3 08	Period 3 09
C-F-1	I159860		B-19	ISI	-	-	-	-	-	-	-
THIN	2		REDUCER-TO-ELBOW	AUG	-	-	-	-	-	-	-
2	CS			OWN	-	-	-	-	-	-	-
				PRE	-	-	-	-	-	-	-
C-F-1	I159960		B-19	ISI	-	-	-	-	-	-	-
THIN	4		ELBOW-TO-FLANGE (CS PUMP A SUCT)	AUG	-	-	-	-	-	-	-
2	CS			OWN	-	-	-	-	-	-	-
				PRE	-	-	-	-	-	-	-
C-F-1	I160000		B-19	ISI	-	-	-	-	-	-	-
THIN	1		REDUCER-TO-PIPE	AUG	-	-	-	-	-	-	-
2	CS			OWN	-	-	-	-	-	-	-
				PRE	-	-	-	-	-	-	-
C-F-1	I160100		B-19	ISI	-	-	-	-	-	-	-
THIN	2		PIPE-TO-ELBOW	AUG	-	-	-	-	-	-	-
2	CS			OWN	-	-	-	-	-	-	-
				PRE	-	-	-	-	-	-	-
C-F-1	I160200		B-19	ISI	-	-	-	-	-	-	-
THIN	3		ELBOW-TO-PIPE	AUG	-	-	-	-	-	-	-
2	CS			OWN	-	-	-	-	-	-	-
				PRE	-	-	-	-	-	-	-
C-F-1	I160300		B-19	ISI	-	-	-	-	-	-	-
THIN	4		PIPE-TO-VALVE(858B)	AUG	-	-	-	-	-	-	-
2	CS			OWN	-	-	-	-	-	-	-
				PRE	-	-	-	-	-	-	-
C-F-1	I160320		B-19	ISI	-	-	-	-	-	-	-
THIN	5		VALVE 858B TO REDUCER	AUG	-	-	-	-	-	-	-
2	CS			OWN	-	-	-	-	-	-	-
				PRE	-	-	-	-	-	-	-
C-F-1	I160360		B-19	ISI	-	-	-	-	-	-	-
THIN	2		REDUCER-TO-ELBOW	AUG	-	-	-	-	-	-	-
2	CS			OWN	-	-	-	-	-	-	-
				PRE	-	-	-	-	-	-	-
C-F-1	I160460		B-19	ISI	-	-	-	-	-	-	-
THIN	4		ELBOW-TO-FLANGE (CS PUMP B SUCT)	AUG	-	-	-	-	-	-	-
2	CS			OWN	-	-	-	-	-	-	-
				PRE	-	-	-	-	-	-	-
C-F-1	I160680		B-16B	ISI	-	-	-	-	-	-	-
THIN	1 (WELD 18) (WELD 84)		REDUCER-TO-VALVE(1816A)	AUG	-	-	-	-	-	-	-
2	RHR			OWN	-	-	-	-	-	-	-
				PRE	-	-	-	-	-	-	-

Category, ItemNO, Class	Summary / CompID / System	Scope / Method / Procedure	Iso No. Comp. Desc. Code Case		Period 1 00	Period 1 02	Period 2 03	Period 2 05	Period 2 06	Period 3 08	Period 3 09
C-F-1	I160685		B-16B	ISI	-	-	-	-	-	-	-
THIN	2		VALVE(1816A)-TO-PIPE	AUG	-	-	-	-	-	-	-
2	RHR			OWN	-	-	-	-	-	-	-
				PRE	-	-	-	-	-	-	-
C-F-1	I160690		B-16B	ISI	-	-	-	-	-	-	-
THIN	3		PIPE-TO-VALVE(1816B)	AUG	-	-	-	-	-	-	-
2	RHR			OWN	-	-	-	-	-	-	-
				PRE	-	-	-	-	-	-	-
C-F-1	I160695		B-16B	ISI	-	-	-	-	-	-	-
THIN	4		VALVE(1816B)-TO-REDUCING ELBOW	AUG	-	-	-	-	-	-	-
2	RHR			OWN	-	-	-	-	-	-	-
				PRE	-	-	-	-	-	-	-
C-F-1	I166050		B-46	ISI	-	-	-	-	-	-	-
THIN	2		REDUCER-TO-PIPE (CS PUMP A OUT)	AUG	-	-	-	-	-	-	-
2	CS			OWN	-	-	-	-	-	-	-
				PRE	-	-	-	-	-	-	-
C-F-1	I166100		B-46	ISI	-	-	-	-	-	-	-
THIN	3		PIPE-TO-TEE	AUG	-	-	-	-	-	-	-
2	CS			OWN	-	-	-	-	-	-	-
				PRE	-	-	-	-	-	-	-
C-F-1	I166510		B-46	ISI	-	-	-	-	-	-	-
THIN	2		TEE-TO-ELBOW	AUG	-	-	-	-	-	-	-
2	CS			OWN	-	-	-	-	-	-	-
				PRE	-	-	-	-	-	-	-
C-F-1	I166520	OWN/PT/PT-106	B-46	ISI	-	-	-	-	-	-	-
THIN	3	OWN/UT/UT-208	ELBOW-TO-PIPE	AUG	-	-	-	-	-	-	-
2	CS			OWN	-	-	c	-	-	-	-
				PRE	-	-	-	-	-	-	-
C-F-1	I166530		B-46	ISI	-	-	-	-	-	-	-
THIN	4		PIPE-TO-ELBOW	AUG	-	-	-	-	-	-	-
2	CS			OWN	-	-	-	-	-	-	-
				PRE	-	-	-	-	-	-	-
C-F-1	I166540		B-46	ISI	-	-	-	-	-	-	-
THIN	5		ELBOW-TO-VALVE(860A)	AUG	-	-	-	-	-	-	-
2	CS			OWN	-	-	-	-	-	-	-
				PRE	-	-	-	-	-	-	-
C-F-1	I166800		B-46	ISI	-	-	-	-	-	-	-
THIN	1		TEE-TO-PIPE	AUG	-	-	-	-	-	-	-
2	CS			OWN	-	-	-	-	-	-	-
				PRE	-	-	-	-	-	-	-

Category, ItemNO, Class	Summary / CompID / System	Scope / Method / Procedure	Iso No. Comp. Desc. Code Case		Period 1 00	Period 1 02	Period 2 03	Period 2 05	Period 2 06	Period 3 08	Period 3 09
C-F-1	I166810		B-46	ISI	-	-	-	-	-	-	-
THIN	2		PIPE-TO-ELBOW	AUG	-	-	-	-	-	-	-
2	CS			OWN	-	-	-	-	-	-	-
				PRE	-	-	-	-	-	-	-
C-F-1	I166820		B-46	ISI	-	-	-	-	-	-	-
THIN	3		ELBOW-TO-PIPE	AUG	-	-	-	-	-	-	-
2	CS			OWN	-	-	-	-	-	-	-
				PRE	-	-	-	-	-	-	-
C-F-1	I166830		B-46	ISI	-	-	-	-	-	-	-
THIN	4		PIPE-TO-ELBOW	AUG	-	-	-	-	-	-	-
2	CS			OWN	-	-	-	-	-	-	-
				PRE	-	-	-	-	-	-	-
C-F-1	I166850		B-46	ISI	-	-	-	-	-	-	-
THIN	5		ELBOW-TO-PIPE	AUG	-	-	-	-	-	-	-
2	CS			OWN	-	-	-	-	-	-	-
				PRE	-	-	-	-	-	-	-
C-F-1	I166860		B-46	ISI	-	-	-	-	-	-	-
THIN	6		PIPE-TO-VALVE(860B)	AUG	-	-	-	-	-	-	-
2	CS			OWN	-	-	-	-	-	-	-
				PRE	-	-	-	-	-	-	-
C-F-1	I167510	OWN/PT/PT-106	B-47	ISI	-	-	-	-	-	-	-
THIN	2	OWN/UT/UT-208	REDUCER-TO-TEE (CS PUMP B OUT)	AUG	-	-	-	-	-	-	-
2	CS			OWN	c	-	-	-	-	-	-
				PRE	-	-	-	-	-	-	-
C-F-1	I168010		B-47	ISI	-	-	-	-	-	-	-
THIN	2		TEE-TO-ELBOW	AUG	-	-	-	-	-	-	-
2	CS			OWN	-	-	-	-	-	-	-
				PRE	-	-	-	-	-	-	-
C-F-1	I168020		B-47	ISI	-	-	-	-	-	-	-
THIN	3		ELBOW-TO-PIPE	AUG	-	-	-	-	-	-	-
2	CS			OWN	-	-	-	-	-	-	-
				PRE	-	-	-	-	-	-	-
C-F-1	I168030		B-47	ISI	-	-	-	-	-	-	-
THIN	4		PIPE-TO-ELBOW	AUG	-	-	-	-	-	-	-
2	CS			OWN	-	-	-	-	-	-	-
				PRE	-	-	-	-	-	-	-
C-F-1	I168040		B-47	ISI	-	-	-	-	-	-	-
THIN	5		ELBOW-TO-VALVE(860C)	AUG	-	-	-	-	-	-	-
2	CS			OWN	-	-	-	-	-	-	-
				PRE	-	-	-	-	-	-	-

Category, ItemNO, Class	Summary / CompID / System	Scope / Method / Procedure	Iso No. Comp. Desc. Code Case		Period 1 00	Period 1 02	Period 2 03	Period 2 05	Period 2 06	Period 3 08	Period 3 09
C-F-1	I168300		B-47	ISI	-	-	-	-	-	-	-
THIN	1		TEE-TO-PIPE	AUG	-	-	-	-	-	-	-
2	CS			OWN	-	-	-	-	-	-	-
				PRE	-	-	-	-	-	-	-
C-F-1	I168310		B-47	ISI	-	-	-	-	-	-	-
THIN	2		PIPE-TO-ELBOW	AUG	-	-	-	-	-	-	-
2	CS			OWN	-	-	-	-	-	-	-
				PRE	-	-	-	-	-	-	-
C-F-1	I168320		B-47	ISI	-	-	-	-	-	-	-
THIN	3		ELBOW-TO-PIPE	AUG	-	-	-	-	-	-	-
2	CS			OWN	-	-	-	-	-	-	-
				PRE	-	-	-	-	-	-	-
C-F-1	I168330		B-47	ISI	-	-	-	-	-	-	-
THIN	4		PIPE-TO-ELBOW	AUG	-	-	-	-	-	-	-
2	CS			OWN	-	-	-	-	-	-	-
				PRE	-	-	-	-	-	-	-
C-F-1	I168350		B-47	ISI	-	-	-	-	-	-	-
THIN	5		ELBOW-TO-PIPE	AUG	-	-	-	-	-	-	-
2	CS			OWN	-	-	-	-	-	-	-
				PRE	-	-	-	-	-	-	-
C-F-1	I168360		B-47	ISI	-	-	-	-	-	-	-
THIN	6		PIPE-TO-VALVE(860D)	AUG	-	-	-	-	-	-	-
2	CS			OWN	-	-	-	-	-	-	-
				PRE	-	-	-	-	-	-	-
CF2	I079050		B-8	ISI	-	-	-	-	-	-	-
/C5.52	AL1		ELBOW LONGITUDINAL WELD	AUG	-	-	-	-	-	-	-
2	MS			OWN	-	-	-	-	-	-	-
				PRE	-	-	-	-	-	-	-
CF2	I079060		B-8	ISI	-	-	-	-	-	-	-
/C5.52	AL2		ELBOW LONGITUDINAL WELD	AUG	-	-	-	-	-	-	-
2	MS			OWN	-	-	-	-	-	-	-
				PRE	-	-	-	-	-	-	-
CF2	I079350		B-8	ISI	-	-	-	-	-	-	-
/C5.52	A2L1		ELBOW LONGITUDINAL WELD	AUG	-	-	-	-	-	-	-
2	MS			OWN	-	-	-	-	-	-	-
				PRE	-	-	-	-	-	-	-
CF2	I079360		B-8	ISI	-	-	-	-	-	-	-
/C5.52	A2L2		ELBOW LONGITUDINAL WELD	AUG	-	-	-	-	-	-	-
2	MS			OWN	-	-	-	-	-	-	-
				PRE	-	-	-	-	-	-	-

Category, ItemNO, Class	Summary / CompID / System	Scope / Method / Procedure	Iso No. Comp. Desc. Code Case		Period 1 00	Period 1 02	Period 2 03	Period 2 05	Period 2 06	Period 3 08	Period 3 09
CF2	I079850		B-8	ISI	-	-	-	-	-	-	-
/C5.52	BL1		ELBOW LONGITUDINAL WELD	AUG	-	-	-	-	-	-	-
2	MS			OWN	-	-	-	-	-	-	-
				PRE	-	-	-	-	-	-	-
CF2	I079860		B-8	ISI	-	-	-	-	-	-	-
/C5.52	BL2		ELBOW LONGITUDINAL WELD	AUG	-	-	-	-	-	-	-
2	MS			OWN	-	-	-	-	-	-	-
				PRE	-	-	-	-	-	-	-
CF2	I080250		B-8	ISI	-	-	-	-	-	-	-
/C5.52	C1L1		ELBOW LONGITUDINAL WELD	AUG	-	-	-	-	-	-	-
2	MS			OWN	-	-	-	-	-	-	-
				PRE	-	-	-	-	-	-	-
CF2	I080260		B-8	ISI	-	-	-	-	-	-	-
/C5.52	C1L2		ELBOW LONGITUDINAL WELD	AUG	-	-	-	-	-	-	-
2	MS			OWN	-	-	-	-	-	-	-
				PRE	-	-	-	-	-	-	-
CF2	I080650		B-9	ISI	-	-	-	-	-	-	-
/C5.52	DL1		ELBOW LONGITUDINAL WELD	AUG	-	-	-	-	-	-	-
2	MS			OWN	-	-	-	-	-	-	-
				PRE	-	-	-	-	-	-	-
CF2	I080660		B-9	ISI	-	-	-	-	-	-	-
/C5.52	DL2		ELBOW LONGITUDINAL WELD	AUG	-	-	-	-	-	-	-
2	MS			OWN	-	-	-	-	-	-	-
				PRE	-	-	-	-	-	-	-
CF2	I081150		B-9	ISI	-	-	-	-	-	-	-
/C5.52	D2L1		ELBOW LONGITUDINAL WELD	AUG	-	-	-	-	-	-	-
2	MS			OWN	-	-	-	-	-	-	-
				PRE	-	-	-	-	-	-	-
CF2	I081160		B-9	ISI	-	-	-	-	-	-	-
/C5.52	D2L2		ELBOW LONGITUDINAL WELD	AUG	-	-	-	-	-	-	-
2	MS			OWN	-	-	-	-	-	-	-
				PRE	-	-	-	-	-	-	-
CF2	I081450		B-9	ISI	-	-	-	-	-	-	-
/C5.52	EL1		ELBOW LONGITUDINAL WELD	AUG	-	-	-	-	-	-	-
2	MS			OWN	-	-	-	-	-	-	-
				PRE	-	-	-	-	-	-	-
CF2	I081460		B-9	ISI	-	-	-	-	-	-	-
/C5.52	EL2		ELBOW LONGITUDINAL WELD	AUG	-	-	-	-	-	-	-
2	MS			OWN	-	-	-	-	-	-	-
				PRE	-	-	-	-	-	-	-

Category, ItemNO, Class	Summary / CompID / System	Scope / Method / Procedure	Iso No. Comp. Desc. Code Case		Period 1 00	Period 1 02	Period 2 03	Period 2 05	Period 2 06	Period 3 08	Period 3 09
CF2	I081550		B-9	ISI	-	-	-	-	-	-	-
/C5.52	E1L1		ELBOW LONGITUDINAL WELD	AUG	-	-	-	-	-	-	-
2	MS			OWN	-	-	-	-	-	-	-
				PRE	-	-	-	-	-	-	-
CF2	I081560		B-9	ISI	-	-	-	-	-	-	-
/C5.52	E1L2		ELBOW LONGITUDINAL WELD	AUG	-	-	-	-	-	-	-
2	MS			OWN	-	-	-	-	-	-	-
				PRE	-	-	-	-	-	-	-
CF2	I081850		B-9	ISI	-	-	-	-	-	-	-
/C5.52	FL1		ELBOW LONGITUDINAL WELD	AUG	-	-	-	-	-	-	-
2	MS			OWN	-	-	-	-	-	-	-
				PRE	-	-	-	-	-	-	-
CF2	I081860		B-9	ISI	-	-	-	-	-	-	-
/C5.52	FL2		ELBOW LONGITUDINAL WELD	AUG	-	-	-	-	-	-	-
2	MS			OWN	-	-	-	-	-	-	-
				PRE	-	-	-	-	-	-	-
CF2	I084450		B-8	ISI	-	-	-	-	-	-	-
/C5.52	AL1		ELBOW LONGITUDINAL WELD	AUG	-	-	-	-	-	-	-
2	MS			OWN	-	-	-	-	-	-	-
				PRE	-	-	-	-	-	-	-
CF2	I084460		B-8	ISI	-	-	-	-	-	-	-
/C5.52	AL2		ELBOW LONGITUDINAL WELD	AUG	-	-	-	-	-	-	-
2	MS			OWN	-	-	-	-	-	-	-
				PRE	-	-	-	-	-	-	-
CF2	I084650		B-8	ISI	-	-	-	-	-	-	-
/C5.52	A1L1		ELBOW LONGITUDINAL WELD	AUG	-	-	-	-	-	-	-
2	MS			OWN	-	-	-	-	-	-	-
				PRE	-	-	-	-	-	-	-
CF2	I084660		B-8	ISI	-	-	-	-	-	-	-
/C5.52	A1L2		ELBOW LONGITUDINAL WELD	AUG	-	-	-	-	-	-	-
2	MS			OWN	-	-	-	-	-	-	-
				PRE	-	-	-	-	-	-	-
CF2	I085050		B-8	ISI	-	-	-	-	-	-	-
/C5.52	AXL1		ELBOW LONGITUDINAL WELD	AUG	-	-	-	-	-	-	-
2	MS			OWN	-	-	-	-	-	-	-
				PRE	-	-	-	-	-	-	-
CF2	I085060		B-8	ISI	-	-	-	-	-	-	-
/C5.52	AXL2		ELBOW LONGITUDINAL WELD	AUG	-	-	-	-	-	-	-
2	MS			OWN	-	-	-	-	-	-	-
				PRE	-	-	-	-	-	-	-

Category, ItemNO, Class	Summary / CompID / System	Scope / Method / Procedure	Iso No. Comp. Desc. Code Case		Period 1 00	Period 1 02	Period 2 03	Period 2 05	Period 2 06	Period 3 08	Period 3 09
CF2	I085700		B-8	ISI	-	-	-	-	-	-	-
/C5.52	BXL1		ELBOW LONGITUDINAL WELD	AUG	-	-	-	-	-	-	-
2	MS			OWN	-	-	-	-	-	-	-
				PRE	-	-	-	-	-	-	-
CF2	I085740		B-8	ISI	-	-	-	-	-	-	-
/C5.52	BXL2		ELBOW LONGITUDINAL WELD	AUG	-	-	-	-	-	-	-
2	MS			OWN	-	-	-	-	-	-	-
				PRE	-	-	-	-	-	-	-
CF2	I086150		B-10A	ISI	-	-	-	-	-	-	-
/C5.52	DL1		ELBOW LONGITUDINAL WELD	AUG	-	-	-	-	-	-	-
2	MS			OWN	-	-	-	-	-	-	-
				PRE	-	-	-	-	-	-	-
CF2	I086160		B-10A	ISI	-	-	-	-	-	-	-
/C5.52	DL2		ELBOW LONGITUDINAL WELD	AUG	-	-	-	-	-	-	-
2	MS			OWN	-	-	-	-	-	-	-
				PRE	-	-	-	-	-	-	-
CF2	I086450		B-10A	ISI	-	-	-	-	-	-	-
/C5.52	D2L1		ELBOW LONGITUDINAL WELD	AUG	-	-	-	-	-	-	-
2	MS			OWN	-	-	-	-	-	-	-
				PRE	-	-	-	-	-	-	-
CF2	I086460		B-10A	ISI	-	-	-	-	-	-	-
/C5.52	D2L2		ELBOW LONGITUDINAL WELD	AUG	-	-	-	-	-	-	-
2	MS			OWN	-	-	-	-	-	-	-
				PRE	-	-	-	-	-	-	-
CF2	I087800		B-10A	ISI	-	-	-	-	-	-	-
/C5.52	H1L1		ELBOW LONGITUDINAL WELD	AUG	-	-	-	-	-	-	-
2	MS			OWN	-	-	-	-	-	-	-
				PRE	-	-	-	-	-	-	-
CF2	I087850		B-10A	ISI	-	-	-	-	-	-	-
/C5.52	H1L2		ELBOW LONGITUDINAL WELD	AUG	-	-	-	-	-	-	-
2	MS			OWN	-	-	-	-	-	-	-
				PRE	-	-	-	-	-	-	-
CF2	I088450		B-10A	ISI	-	-	-	-	-	-	-
/C5.52	J1L1		ELBOW LONGITUDINAL WELD	AUG	-	-	-	-	-	-	-
2	MS			OWN	-	-	-	-	-	-	-
				PRE	-	-	-	-	-	-	-
CF2	I088460		B-10A	ISI	-	-	-	-	-	-	-
/C5.52	J1L2		ELBOW LONGITUDINAL WELD	AUG	-	-	-	-	-	-	-
2	MS			OWN	-	-	-	-	-	-	-
				PRE	-	-	-	-	-	-	-

Category, ItemNO, Class	Summary / CompID / System	Scope / Method / Procedure	Iso No. Comp. Desc. Code Case		Period 1 00	Period 1 02	Period 2 03	Period 2 05	Period 2 06	Period 3 08	Period 3 09
C-F-2	I079000		B-8	ISI	-	-	-	-	-	-	-
C5.51	A-R		NOZZLE-TO-ELBOW (S/G-A)	AUG	-	-	-	-	-	-	-
2	MS			OWN	-	-	-	-	-	-	-
				PRE	-	-	-	-	-	-	-
C-F-2	I079100		B-8	ISI	-	-	-	-	-	-	-
C5.51	A1X		ELBOW-TO-PIPE	AUG	-	-	-	-	-	-	-
2	MS			OWN	-	-	-	-	-	-	-
				PRE	-	-	-	-	-	-	-
C-F-2	I079175		B-8	ISI	-	-	-	-	-	-	-
C5.51	A1Z		PIPE-TO-PIPE	AUG	-	-	-	-	-	-	-
2	MS			OWN	-	-	-	-	-	-	-
				PRE	-	-	-	-	-	-	-
C-F-2	I079200		B-8	ISI	-	-	-	-	-	-	-
C5.51	A1-R		PIPE-TO-PIPE	AUG	-	-	-	-	-	-	-
2	MS			OWN	-	-	-	-	-	-	-
				PRE	-	-	-	-	-	-	-
C-F-2	I079300		B-8	ISI	-	-	-	-	-	-	-
C5.51	A2X		PIPE-TO-ELBOW	AUG	-	-	-	-	-	-	-
2	MS			OWN	-	-	-	-	-	-	-
				PRE	-	-	-	-	-	-	-
C-F-2	I079400		B-8	ISI	-	-	-	-	-	-	-
C5.51	A2		ELBOW-TO-PIPE	AUG	-	-	-	-	-	-	-
2	MS			OWN	-	-	-	-	-	-	-
				PRE	-	-	-	-	-	-	-
C-F-2	I079800		B-8	ISI	-	-	-	-	-	-	-
C5.51	B		PIPE-TO-ELBOW	AUG	-	-	-	-	-	-	-
2	MS			OWN	-	-	-	-	-	-	-
				PRE	-	-	-	-	-	-	-
C-F-2	I079900		B-8	ISI	-	-	-	-	-	-	-
C5.51	B1		ELBOW-TO-PIPE	AUG	-	-	-	-	-	-	-
2	MS			OWN	-	-	-	-	-	-	-
				PRE	-	-	-	-	-	-	-
C-F-2	I080150		B-8	ISI	-	-	-	-	-	-	-
C5.51	C2		PIPE-TO-PIPE	AUG	-	-	-	-	-	-	-
2	MS			OWN	-	-	-	-	-	-	-
				PRE	-	-	-	-	-	-	-
C-F-2	I080200		B-8	ISI	-	-	-	-	-	-	-
C5.51	C1		PIPE-TO-ELBOW	AUG	-	-	-	-	-	-	-
2	MS			OWN	-	-	-	-	-	-	-
				PRE	-	-	-	-	-	-	-

Category, ItemNO, Class	Summary / CompID / System	Scope / Method / Procedure	Iso No. Comp. Desc. Code Case		Period 1 00	Period 1 02	Period 2 03	Period 2 05	Period 2 06	Period 3 08	Period 3 09
C-F-2	I080300		B-8	ISI	-	-	-	-	-	-	-
C5.51	C		ELBOW-TO-PIPE	AUG	-	-	-	-	-	-	-
2	MS			OWN	-	-	-	-	-	-	-
				PRE	-	-	-	-	-	-	-
C-F-2	I080600	ISI/MT/MT-105	B-9	ISI	c	-	-	-	-	-	-
C5.51	D	ISI/RT/RT-104	PIPE-TO-ELBOW PEN. 401	AUG	-	-	-	-	-	-	-
2	MS			OWN	-	-	-	-	-	-	-
				PRE	-	-	-	-	-	-	-
C-F-2	I080700		B-9	ISI	-	-	-	-	-	-	-
C5.51	D1		ELBOW-TO-PIPE	AUG	-	-	-	-	-	-	-
2	MS			OWN	-	-	-	-	-	-	-
				PRE	-	-	-	-	-	-	-
C-F-2	I081100		B-9	ISI	-	-	-	-	-	-	-
C5.51	D2		PIPE-TO-ELBOW	AUG	-	-	-	-	-	-	-
2	MS			OWN	-	-	-	-	-	-	-
				PRE	-	-	-	-	-	-	-
C-F-2	I081200		B-9	ISI	-	-	-	-	-	-	-
C5.51	D3		ELBOW-TO-PIPE	AUG	-	-	-	-	-	-	-
2	MS			OWN	-	-	-	-	-	-	-
				PRE	-	-	-	-	-	-	-
C-F-2	I081400		B-9	ISI	-	-	-	-	-	-	-
C5.51	E		PIPE-TO-ELBOW	AUG	-	-	-	-	-	-	-
2	MS			OWN	-	-	-	-	-	-	-
				PRE	-	-	-	-	-	-	-
C-F-2	I081500		B-9	ISI	-	-	-	-	-	-	-
C5.51	E1		ELBOW-TO-PIPE	AUG	-	-	-	-	-	-	-
2	MS			OWN	-	-	-	-	-	-	-
				PRE	-	-	-	-	-	-	-
C-F-2	I081650	ISI/MT/MT-105	B-9	ISI	-	-	-	-	s	-	-
C5.51	E1A	ISI/UT/UT-209	PIPE-TO-ELBOW	AUG	-	-	-	-	-	-	-
2	MS			OWN	-	-	-	-	-	-	-
				PRE	-	-	-	-	-	-	-
C-F-2	I081700		B-9	ISI	-	-	-	-	-	-	-
C5.51	E2		ELBOW-TO-PIPE	AUG	-	-	-	-	-	-	-
2	MS			OWN	-	-	-	-	-	-	-
				PRE	-	-	-	-	-	-	-
C-F-2	I081800	ISI/MT/MT-105	B-9	ISI	-	-	-	-	-	s	-
C5.51	F	ISI/RT/RT-104	PIPE-TO-ELBOW	AUG	-	-	-	-	-	-	-
2	MS			OWN	-	-	-	-	-	-	-
				PRE	-	-	-	-	-	-	-

Category, ItemNO, Class	Summary / CompID / System	Scope / Method / Procedure	Iso No. Comp. Desc. Code Case		Period 1 00	Period 1 02	Period 2 03	Period 2 05	Period 2 06	Period 3 08	Period 3 09
C-F-2	I081900		B-9	ISI	-	-	-	-	-	-	-
C5.51	F1		ELBOW-TO-PIPE	AUG	-	-	-	-	-	-	-
2	MS			OWN	-	-	-	-	-	-	-
				PRE	-	-	-	-	-	-	-
C-F-2	I082200	ISI/MT/MT-105	B-9	ISI	c	-	-	-	-	-	-
C5.51	G	ISI/RT/RT-104	PIPE-TO-TEE	AUG	-	-	-	-	-	-	-
2	MS			OWN	-	-	-	-	-	-	-
				PRE	-	-	-	-	-	-	-
C-F-2	I082300	ISI/MT/MT-105	B-9A	ISI	-	-	-	-	-	s	-
C5.51	G1	ISI/RT/RT-104	TEE-TO-CAP	AUG	-	-	-	-	-	-	-
2	MS			OWN	-	-	-	-	-	-	-
				PRE	-	-	-	-	-	-	-
C-F-2	I082400		B-9A	ISI	-	-	-	-	-	-	-
C5.51	G2		TEE-TO-PIPE	AUG	-	-	-	-	-	-	-
2	MS			OWN	-	-	-	-	-	-	-
				PRE	-	-	-	-	-	-	-
C-F-2	I082900		B-9A	ISI	-	-	-	-	-	-	-
C5.51	G3		PIPE-TO-PIPE	AUG	-	-	-	-	-	-	-
2	MS			OWN	-	-	-	-	-	-	-
				PRE	-	-	-	-	-	-	-
C-F-2	I083600		B-9A	ISI	-	-	-	-	-	-	-
C5.51	H		PIPE-TO-VALVE(3517)	AUG	-	-	-	-	-	-	-
2	MS			OWN	-	-	-	-	-	-	-
				PRE	-	-	-	-	-	-	-
C-F-2	I083800	ISI/MT/MT-105	B-9A	ISI	-	c	-	-	-	-	-
C5.51	G2-BC-1-A	ISI/RT/RT-104	PIPE-TO-VALVE(3505)	AUG	-	-	-	-	-	-	-
2	MS			OWN	-	-	-	-	-	-	-
				PRE	-	-	-	-	-	-	-
C-F-2	I083805		B-9A	ISI	-	-	-	-	-	-	-
C5.51	G2-BC-1-B		VALVE(3505)-TO-PIPE	AUG	-	-	-	-	-	-	-
2	MS			OWN	-	-	-	-	-	-	-
				PRE	-	-	-	-	-	-	-
C-F-2	I083820		B-9A	ISI	-	-	-	-	-	-	-
C5.51	G2-BC-1-C		PIPE-TO-VALVE(3505A)	AUG	-	-	-	-	-	-	-
2	MS			OWN	-	-	-	-	-	-	-
				PRE	-	-	-	-	-	-	-
C-F-2	I083850	ISI/MT/MT-105	B-9A	ISI	-	-	-	s	-	-	-
C5.51	G2-BC-2-B	ISI/UT/UT-209	FLANGE(3507)-TO-PIPE	AUG	-	-	-	-	-	-	-
2	MS			OWN	-	-	-	-	-	-	-
				PRE	-	-	-	-	-	-	-

Category, ItemNO, Class	Summary / CompID / System	Scope / Method / Procedure	Iso No. Comp. Desc. Code Case		Period 1 00	Period 1 02	Period 2 03	Period 2 05	Period 2 06	Period 3 08	Period 3 09
C-F-2	I083875		B-9A	ISI	-	-	-	-	-	-	-
C5.51	G2-BC-2-C		PIPE-TO-FLANGE(3411)	AUG	-	-	-	-	-	-	-
2	MS			OWN	-	-	-	-	-	-	-
				PRE	-	-	-	-	-	-	-
C-F-2	I083900	ISI/MT/MT-105	B-9A	ISI	-	-	-	-	-	s	-
C5.51	G2-BC-2-A	ISI/UT/UT-209	PIPE-TO-VALVE(3507)	AUG	-	-	-	-	-	-	-
2	MS			OWN	-	-	-	-	-	-	-
				PRE	-	-	-	-	-	-	-
C-F-2	I084000		B-9A	ISI	-	-	-	-	-	-	-
C5.51	G3-BC-1-A		PIPE-TO-FLANGE(3509)	AUG	-	-	-	-	-	-	-
2	MS			OWN	-	-	-	-	-	-	-
				PRE	-	-	-	-	-	-	-
C-F-2	I084100		B-9A	ISI	-	-	-	-	-	-	-
C5.51	G3-BC-2-A		PIPE-TO-FLANGE(3511)	AUG	-	-	-	-	-	-	-
2	MS			OWN	-	-	-	-	-	-	-
				PRE	-	-	-	-	-	-	-
C-F-2	I084200		B-9A	ISI	-	-	-	-	-	-	-
C5.51	G3-BC-3-A		PIPE-TO-FLANGE(3513)	AUG	-	-	-	-	-	-	-
2	MS			OWN	-	-	-	-	-	-	-
				PRE	-	-	-	-	-	-	-
C-F-2	I084300		B-9A	ISI	-	-	-	-	-	-	-
C5.51	G3-BC-4-A		PIPE-TO-FLANGE(3515)	AUG	-	-	-	-	-	-	-
2	MS			OWN	-	-	-	-	-	-	-
				PRE	-	-	-	-	-	-	-
C-F-2	I084315		B-9A	ISI	-	-	-	-	-	-	-
C5.51	G4-BC-5A		PIPE-TO-REDUCER	AUG	-	-	-	-	-	-	-
2	MS			OWN	-	-	-	-	-	-	-
				PRE	-	-	-	-	-	-	-
C-F-2	I084400		B-8	ISI	-	-	-	-	-	-	-
C5.51	A-R		NOZZLE-TO-ELBOW (S/G-B)	AUG	-	-	-	-	-	-	-
2	MS			OWN	-	-	-	-	-	-	-
				PRE	-	-	-	-	-	-	-
C-F-2	I084500	ISI/MT/MT-105	B-8	ISI	-	-	-	-	-	s	-
C5.51	A3	ISI/UT/UT-209	ELBOW-TO-PIPE	AUG	-	-	-	-	-	-	-
2	MS			OWN	-	-	-	-	-	-	-
				PRE	-	-	-	-	-	-	-
C-F-2	I084600		B-8	ISI	-	-	-	-	-	-	-
C5.51	A1-R		PIPE-TO-ELBOW	AUG	-	-	-	-	-	-	-
2	MS			OWN	-	-	-	-	-	-	-
				PRE	-	-	-	-	-	-	-

Category, ItemNO, Class	Summary / CompID / System	Scope / Method / Procedure	Iso No. Comp. Desc. Code Case		Period 1 00	Period 1 02	Period 2 03	Period 2 05	Period 2 06	Period 3 08	Period 3 09
C-F-2	I084800		B-8	ISI	-	-	-	-	-	-	-
C5.51	A2		ELBOW-TO-PIPE	AUG	-	-	-	-	-	-	-
2	MS			OWN	-	-	-	-	-	-	-
				PRE	-	-	-	-	-	-	-
C-F-2	I085000		B-8	ISI	-	-	-	-	-	-	-
C5.51	AX		PIPE-TO-ELBOW	AUG	-	-	-	-	-	-	-
2	MS			OWN	-	-	-	-	-	-	-
				PRE	-	-	-	-	-	-	-
C-F-2	I085100		B-8	ISI	-	-	-	-	-	-	-
C5.51	B		ELBOW-TO-PIPE	AUG	-	-	-	-	-	-	-
2	MS			OWN	-	-	-	-	-	-	-
				PRE	-	-	-	-	-	-	-
C-F-2	I085500		B-8	ISI	-	-	-	-	-	-	-
C5.51	B1		PIPE-TO-PIPE	AUG	-	-	-	-	-	-	-
2	MS			OWN	-	-	-	-	-	-	-
				PRE	-	-	-	-	-	-	-
C-F-2	I085600		B-8	ISI	-	-	-	-	-	-	-
C5.51	BX		PIPE-TO-ELBOW	AUG	-	-	-	-	-	-	-
2	MS			OWN	-	-	-	-	-	-	-
				PRE	-	-	-	-	-	-	-
C-F-2	I085800		B-8	ISI	-	-	-	-	-	-	-
C5.51	C		ELBOW-TO-PIPE	AUG	-	-	-	-	-	-	-
2	MS			OWN	-	-	-	-	-	-	-
				PRE	-	-	-	-	-	-	-
C-F-2	I086100		B-10A	ISI	-	-	-	-	-	-	-
C5.51	D		PIPE-TO-ELBOW PEN. 402	AUG	-	-	-	-	-	-	-
2	MS			OWN	-	-	-	-	-	-	-
				PRE	-	-	-	-	-	-	-
C-F-2	I086200		B-10A	ISI	-	-	-	-	-	-	-
C5.51	D1		ELBOW-TO-PIPE	AUG	-	-	-	-	-	-	-
2	MS			OWN	-	-	-	-	-	-	-
				PRE	-	-	-	-	-	-	-
C-F-2	I086400		B-10A	ISI	-	-	-	-	-	-	-
C5.51	D2		PIPE-TO-ELBOW	AUG	-	-	-	-	-	-	-
2	MS			OWN	-	-	-	-	-	-	-
				PRE	-	-	-	-	-	-	-
C-F-2	I086500		B-10A	ISI	-	-	-	-	-	-	-
C5.51	E		ELBOW-TO-PIPE	AUG	-	-	-	-	-	-	-
2	MS			OWN	-	-	-	-	-	-	-
				PRE	-	-	-	-	-	-	-

Category, ItemNO, Class	Summary / CompID / System	Scope / Method / Procedure	Iso No. Comp. Desc. Code Case		Period 1 00	Period 1 02	Period 2 03	Period 2 05	Period 2 06	Period 3 08	Period 3 09
C-F-2	I086700		B-10A	ISI	-	-	-	-	-	-	-
C5.51	F		PIPE-TO-PIPE	AUG	-	-	-	-	-	-	-
2	MS			OWN	-	-	-	-	-	-	-
				PRE	-	-	-	-	-	-	-
C-F-2	I087000		B-10A	ISI	-	-	-	-	-	-	-
C5.51	G		PIPE-TO-PIPE	AUG	-	-	-	-	-	-	-
2	MS			OWN	-	-	-	-	-	-	-
				PRE	-	-	-	-	-	-	-
C-F-2	I087300		B-10A	ISI	-	-	-	-	-	-	-
C5.51	H		PIPE-TO-PIPE	AUG	-	-	-	-	-	-	-
2	MS			OWN	-	-	-	-	-	-	-
				PRE	-	-	-	-	-	-	-
C-F-2	I087700		B-10A	ISI	-	-	-	-	-	-	-
C5.51	H1		PIPE-TO-ELBOW	AUG	-	-	-	-	-	-	-
2	MS			OWN	-	-	-	-	-	-	-
				PRE	-	-	-	-	-	-	-
C-F-2	I087900		B-10A	ISI	-	-	-	-	-	-	-
C5.51	J		ELBOW-TO-PIPE	AUG	-	-	-	-	-	-	-
2	MS			OWN	-	-	-	-	-	-	-
				PRE	-	-	-	-	-	-	-
C-F-2	I088400	ISI/MT/MT-105	B-10A	ISI	-	-	-	-	-	s	-
C5.51	J1	ISI/RT/RT-104	PIPE-TO-ELBOW	AUG	-	-	-	-	-	-	-
2	MS			OWN	-	-	-	-	-	-	-
				PRE	-	-	-	-	-	-	-
C-F-2	I088500		B-10A	ISI	-	-	-	-	-	-	-
C5.51	K		ELBOW-TO-PIPE	AUG	-	-	-	-	-	-	-
2	MS			OWN	-	-	-	-	-	-	-
				PRE	-	-	-	-	-	-	-
C-F-2	I088800	ISI/MT/MT-105	B-10A	ISI	c	-	-	-	-	-	-
C5.51	L	ISI/UT/UT-209	PIPE-TO-TEE	AUG	-	-	-	-	-	-	-
2	MS			OWN	-	-	-	-	-	-	-
				PRE	-	-	-	-	-	-	-
C-F-2	I088900		B-10	ISI	-	-	-	-	-	-	-
C5.51	L1		TEE-TO-CAP	AUG	-	-	-	-	-	-	-
2	MS			OWN	-	-	-	-	-	-	-
				PRE	-	-	-	-	-	-	-
C-F-2	I089000		B-10	ISI	-	-	-	-	-	-	-
C5.51	L2		TEE-TO-PIPE	AUG	-	-	-	-	-	-	-
2	MS			OWN	-	-	-	-	-	-	-
				PRE	-	-	-	-	-	-	-

Category, ItemNO, Class	Summary / CompID / System	Scope / Method / Procedure	Iso No. Comp. Desc. Code Case		Period 1 00	Period 1 02	Period 2 03	Period 2 05	Period 2 06	Period 3 08	Period 3 09
C-F-2	I089500		B-10	ISI	-	-	-	-	-	-	-
C5.51	L3		PIPE-TO-PIPE	AUG	-	-	-	-	-	-	-
2	MS			OWN	-	-	-	-	-	-	-
				PRE	-	-	-	-	-	-	-
C-F-2	I090200	ISI/MT/MT-105	B-10	ISI	-	-	c	-	-	-	-
C5.51	M	ISI/RT/RT-104	PIPE-TO-VALVE(3516)	AUG	-	-	-	-	-	-	-
2	MS			OWN	-	-	-	-	-	-	-
				PRE	-	-	-	-	-	-	-
C-F-2	I090300	ISI/MT/MT-105	B-10	ISI	-	-	-	s	-	-	-
C5.51	L2-BC-1-A	ISI/UT/UT-209	PIPE-TO-VALVE(3504)	AUG	-	-	-	-	-	-	-
2	MS			OWN	-	-	-	-	-	-	-
				PRE	-	-	-	-	-	-	-
C-F-2	I090315		B-10	ISI	-	-	-	-	-	-	-
C5.51	L2-BC-1-B		VALVE(3504)-TO-PIPE	AUG	-	-	-	-	-	-	-
2	MS			OWN	-	-	-	-	-	-	-
				PRE	-	-	-	-	-	-	-
C-F-2	I090320		B-10	ISI	-	-	-	-	-	-	-
C5.51	L2-BC-1-C		PIPE-TO-VALVE(3504A)	AUG	-	-	-	-	-	-	-
2	MS			OWN	-	-	-	-	-	-	-
				PRE	-	-	-	-	-	-	-
C-F-2	I090325		B-10	ISI	-	-	-	-	-	-	-
C5.51	L2-BC-2-B		FLANGE(3506)-TO-PIPE	AUG	-	-	-	-	-	-	-
2	MS			OWN	-	-	-	-	-	-	-
				PRE	-	-	-	-	-	-	-
C-F-2	I090350		B-10	ISI	-	-	-	-	-	-	-
C5.51	L2-BC-2-C		PIPE-TO-FLANGE(3410)	AUG	-	-	-	-	-	-	-
2	MS			OWN	-	-	-	-	-	-	-
				PRE	-	-	-	-	-	-	-
C-F-2	I090400	ISI/MT/MT-105	B-10	ISI	-	-	-	-	-	s	-
C5.51	L2-BC-2-A	ISI/UT/UT-209	PIPE-TO-VALVE(3506)	AUG	-	-	-	-	-	-	-
2	MS			OWN	-	-	-	-	-	-	-
				PRE	-	-	-	-	-	-	-
C-F-2	I090500		B-10	ISI	-	-	-	-	-	-	-
C5.51	L3-BC-1-A		PIPE-TO-FLANGE(3514)	AUG	-	-	-	-	-	-	-
2	MS			OWN	-	-	-	-	-	-	-
				PRE	-	-	-	-	-	-	-
C-F-2	I090600		B-10	ISI	-	-	-	-	-	-	-
C5.51	L3-BC-2-A		PIPE-TO-FLANGE(3512)	AUG	-	-	-	-	-	-	-
2	MS			OWN	-	-	-	-	-	-	-
				PRE	-	-	-	-	-	-	-

Category, ItemNO, Class	Summary / CompID / System	Scope / Method / Procedure	Iso No. Comp. Desc. Code Case		Period 1 00	Period 1 02	Period 2 03	Period 2 05	Period 2 06	Period 3 08	Period 3 09
C-F-2	I090700		B-10	ISI	-	-	-	-	-	-	-
C5.51	L3-BC-3-A		PIPE-TO-FLANGE(3510)	AUG	-	-	-	-	-	-	-
2	MS			OWN	-	-	-	-	-	-	-
				PRE	-	-	-	-	-	-	-
C-F-2	I090800		B-10	ISI	-	-	-	-	-	-	-
C5.51	L3-BC-4-A		PIPE-TO-FLANGE(3508)	AUG	-	-	-	-	-	-	-
2	MS			OWN	-	-	-	-	-	-	-
				PRE	-	-	-	-	-	-	-
C-F-2	I090815		B-10	ISI	-	-	-	-	-	-	-
C5.51	L3-BC-5A		PIPE-TO-REDUCER	AUG	-	-	-	-	-	-	-
2	MS			OWN	-	-	-	-	-	-	-
				PRE	-	-	-	-	-	-	-
C-F-2	I091000		B-11	ISI	-	-	-	-	-	-	-
C5.51	X		VALVE(3993)-TO-PIPE	AUG	-	-	-	-	-	-	-
2	FW			OWN	-	-	-	-	-	-	-
				PRE	-	-	-	-	-	-	-
C-F-2	I091100		B-11	ISI	-	-	-	-	-	-	-
C5.51	Y		PIPE-TO-VALVE(3995)	AUG	-	-	-	-	-	-	-
2	FW			OWN	-	-	-	-	-	-	-
				PRE	-	-	-	-	-	-	-
C-F-2	I091200	ISI/MT/MT-105	B-11	ISI	-	-	c	-	-	-	-
C5.51	Z	ISI/RT/RT-104	VALVE(3995)-TO-PIPE	AUG	-	-	-	-	-	-	-
2	FW			OWN	-	-	-	-	-	-	-
				PRE	-	-	-	-	-	-	-
C-F-2	I091300		B-11	ISI	-	-	-	-	-	-	-
C5.51	Z1		PIPE-TO-ELBOW	AUG	-	-	-	-	-	-	-
2	FW			OWN	-	-	-	-	-	-	-
				PRE	-	-	-	-	-	-	-
C-F-2	I091400		B-11	ISI	-	-	-	-	-	-	-
C5.51	Z2		ELBOW-TO-PIPE	AUG	-	-	-	-	-	-	-
2	FW			OWN	-	-	-	-	-	-	-
				PRE	-	-	-	-	-	-	-
C-F-2	I091500		B-11	ISI	-	-	-	-	-	-	-
C5.51	Z3		PIPE-TO-ELBOW	AUG	-	-	-	-	-	-	-
2	FW			OWN	-	-	-	-	-	-	-
				PRE	-	-	-	-	-	-	-
C-F-2	I091700		B-11	ISI	-	-	-	-	-	-	-
C5.51	Z4		ELBOW-TO-PIPE	AUG	-	-	-	-	-	-	-
2	FW			OWN	-	-	-	-	-	-	-
				PRE	-	-	-	-	-	-	-

Category, ItemNO, Class	Summary / CompID / System	Scope / Method / Procedure	Iso No. Comp. Desc. Code Case		Period 1 00	Period 1 02	Period 2 03	Period 2 05	Period 2 06	Period 3 08	Period 3 09
C-F-2	I091800		B-11	ISI	-	-	-	-	-	-	-
C5.51	AA		PIPE-TO-PIPE	AUG	-	-	-	-	-	-	-
2	FW			OWN	-	-	-	-	-	-	-
				PRE	-	-	-	-	-	-	-
C-F-2	I092100		B-12	ISI	-	-	-	-	-	-	-
C5.51	BB		PIPE-TO-ELBOW	AUG	-	-	-	-	-	-	-
2	FW			OWN	-	-	-	-	-	-	-
				PRE	-	-	-	-	-	-	-
C-F-2	I092200		B-12	ISI	-	-	-	-	-	-	-
C5.51	BB2		ELBOW-TO-PIPE	AUG	-	-	-	-	-	-	-
2	FW			OWN	-	-	-	-	-	-	-
				PRE	-	-	-	-	-	-	-
C-F-2	I092400		B-12	ISI	-	-	-	-	-	-	-
C5.51	BB3		PIPE-TO-ELBOW	AUG	-	-	-	-	-	-	-
2	FW			OWN	-	-	-	-	-	-	-
				PRE	-	-	-	-	-	-	-
C-F-2	I092500		B-12	ISI	-	-	-	-	-	-	-
C5.51	CC		ELBOW-TO-PIPE	AUG	-	-	-	-	-	-	-
2	FW			OWN	-	-	-	-	-	-	-
				PRE	-	-	-	-	-	-	-
C-F-2	I092700		B-12	ISI	-	-	-	-	-	-	-
C5.51	CC1		PIPE-TO-ELBOW	AUG	-	-	-	-	-	-	-
2	FW			OWN	-	-	-	-	-	-	-
				PRE	-	-	-	-	-	-	-
C-F-2	I092800		B-12	ISI	-	-	-	-	-	-	-
C5.51	CC2		ELBOW-TO-PIPE	AUG	-	-	-	-	-	-	-
2	FW			OWN	-	-	-	-	-	-	-
				PRE	-	-	-	-	-	-	-
C-F-2	I093000		B-12	ISI	-	-	-	-	-	-	-
C5.51	DD		PIPE-TO-PIPE	AUG	-	-	-	-	-	-	-
2	FW			OWN	-	-	-	-	-	-	-
				PRE	-	-	-	-	-	-	-
C-F-2	I093200		B-12	ISI	-	-	-	-	-	-	-
C5.51	DD1		PIPE-TO-ELBOW	AUG	-	-	-	-	-	-	-
2	FW			OWN	-	-	-	-	-	-	-
				PRE	-	-	-	-	-	-	-
C-F-2	I093300		B-12	ISI	-	-	-	-	-	-	-
C5.51	DD2		ELBOW-TO-PIPE	AUG	-	-	-	-	-	-	-
2	FW			OWN	-	-	-	-	-	-	-
				PRE	-	-	-	-	-	-	-

Category, ItemNO, Class	Summary / CompID / System	Scope / Method / Procedure	Iso No. Comp. Desc. Code Case		Period 1 00	Period 1 02	Period 2 03	Period 2 05	Period 2 06	Period 3 08	Period 3 09
C-F-2	I093400	ISI/MT/MT-105	B-12	ISI	-	-	c	-	-	-	-
C5.51	DD3-R	ISI/UT/UT-209	PIPE-TO-ELBOW	AUG	-	-	-	-	-	-	-
2	FW	ISI/UT/UT-209		OWN	-	-	-	-	-	-	-
				PRE	-	-	-	-	-	-	-
C-F-2	I093600		B-12	ISI	-	-	-	-	-	-	-
C5.51	DD4		ELBOW-TO-PIPE	AUG	-	-	-	-	-	-	-
2	FW			OWN	-	-	-	-	-	-	-
				PRE	-	-	-	-	-	-	-
C-F-2	I093700	ISI/MT/MT-105	B-12	ISI	-	-	-	s	-	-	-
C5.51	DD5	ISI/UT/UT-209	PIPE-TO-ELBOW	AUG	-	-	-	-	-	-	-
2	FW			OWN	-	-	-	-	-	-	-
				PRE	-	-	-	-	-	-	-
C-F-2	I093800		B-12	ISI	-	-	-	-	-	-	-
C5.51	DD6-R		ELBOW-TO-PIPE	AUG	-	-	-	-	-	-	-
2	FW			OWN	-	-	-	-	-	-	-
				PRE	-	-	-	-	-	-	-
C-F-2	I093900	ISI/MT/MT-105	B-12	ISI	-	-	c	-	-	-	-
C5.51	DD7-R	ISI/UT/UT-209	PIPE-TO-ELBOW	AUG	-	-	-	-	-	-	-
2	FW	ISI/UT/UT-209		OWN	-	-	-	-	-	-	-
				PRE	-	-	-	-	-	-	-
C-F-2	I094000		B-12	ISI	-	-	-	-	-	-	-
C5.51	DD8-R		ELBOW-TO-PIPE	AUG	-	-	-	-	-	-	-
2	FW			OWN	-	-	-	-	-	-	-
				PRE	-	-	-	-	-	-	-
C-F-2	I094100	ISI/MT/MT-105	B-12	ISI	-	-	-	-	-	s	-
C5.51	DD9	ISI/UT/UT-209	PIPE-TO-REDUCER	AUG	-	-	-	-	-	-	-
2	FW			OWN	-	-	-	-	-	-	-
				PRE	-	-	-	-	-	-	-
C-F-2	I094200	ISI/MT/MT-105	B-12	ISI	-	-	-	-	-	-	s
C5.51	DD10-R	ISI/UT/UT-209	REDUCER-TO-ELBOW	AUG	-	-	-	-	-	-	-
2	FW			OWN	-	-	-	-	-	-	-
				PRE	-	-	-	-	-	-	-
C-F-2	I094300		B-12	ISI	-	-	-	-	-	-	-
C5.51	EE-R		ELBOW-TO-SAFE END (S/G-A)	AUG	-	-	-	-	-	-	-
2	FW			OWN	-	-	-	-	-	-	-
				PRE	-	-	-	-	-	-	-
C-F-2	I094310		B-12	ISI	-	-	-	-	-	-	-
C5.51	E-R		SAFE END-TO-NOZZLE (S/G-A)	AUG	-	-	-	-	-	-	-
2	FW			OWN	-	-	-	-	-	-	-
				PRE	-	-	-	-	-	-	-

Category, ItemNO, Class	Summary / CompID / System	Scope / Method / Procedure	Iso No. Comp. Desc. Code Case		Period 1 00	Period 1 02	Period 2 03	Period 2 05	Period 2 06	Period 3 08	Period 3 09
C-F-2	I094500	ISI/MT/MT-105	B-14	ISI	-	c	-	-	-	-	-
C5.51	L	ISI/RT/RT-104	VALVE(3992)-TO-PIPE	AUG	-	-	-	-	-	-	-
2	FW			OWN	-	-	-	-	-	-	-
				PRE	-	-	-	-	-	-	-
C-F-2	I094600	ISI/MT/MT-105	B-14	ISI	-	-	-	-	-	s	-
C5.51	M	ISI/RT/RT-104	PIPE-TO-VALVE(3994)	AUG	-	-	-	-	-	-	-
2	FW			OWN	-	-	-	-	-	-	-
				PRE	-	-	-	-	-	-	-
C-F-2	I094700		B-14	ISI	-	-	-	-	-	-	-
C5.51	N		VALVE(3994)-TO-ELBOW	AUG	-	-	-	-	-	-	-
2	FW			OWN	-	-	-	-	-	-	-
				PRE	-	-	-	-	-	-	-
C-F-2	I094800	ISI/MT/MT-105	B-14	ISI	-	-	-	s	-	-	-
C5.51	N1	ISI/RT/RT-104	ELBOW-TO-PIPE	AUG	-	-	-	-	-	-	-
2	FW			OWN	-	-	-	-	-	-	-
				PRE	-	-	-	-	-	-	-
C-F-2	I095000		B-14	ISI	-	-	-	-	-	-	-
C5.51	O		PIPE-TO-ELBOW	AUG	-	-	-	-	-	-	-
2	FW			OWN	-	-	-	-	-	-	-
				PRE	-	-	-	-	-	-	-
C-F-2	I095100	ISI/MT/MT-105	B-14	ISI	-	-	-	-	-	s	-
C5.51	O1	ISI/RT/RT-104	ELBOW-TO-PIPE	AUG	-	-	-	-	-	-	-
2	FW			OWN	-	-	-	-	-	-	-
				PRE	-	-	-	-	-	-	-
C-F-2	I095500		B-14	ISI	-	-	-	-	-	-	-
C5.51	P		PIPE-TO-ELBOW	AUG	-	-	-	-	-	-	-
2	FW			OWN	-	-	-	-	-	-	-
				PRE	-	-	-	-	-	-	-
C-F-2	I095700		B-14	ISI	-	-	-	-	-	-	-
C5.51	P1		ELBOW-TO-PIPE	AUG	-	-	-	-	-	-	-
2	FW			OWN	-	-	-	-	-	-	-
				PRE	-	-	-	-	-	-	-
C-F-2	I096000		B-14	ISI	-	-	-	-	-	-	-
C5.51	R		PIPE-TO-PIPE	AUG	-	-	-	-	-	-	-
2	FW			OWN	-	-	-	-	-	-	-
				PRE	-	-	-	-	-	-	-
C-F-2	I096400		B-14	ISI	-	-	-	-	-	-	-
C5.51	S		PIPE-TO-PIPE	AUG	-	-	-	-	-	-	-
2	FW			OWN	-	-	-	-	-	-	-
				PRE	-	-	-	-	-	-	-

Category, ItemNO, Class	Summary / CompID / System	Scope / Method / Procedure	Iso No. Comp. Desc. Code Case		Period 1 00	Period 1 02	Period 2 03	Period 2 05	Period 2 06	Period 3 08	Period 3 09
C-F-2	I096700		B-14	ISI	-	-	-	-	-	-	-
C5.51	T		PIPE-TO-PIPE	AUG	-	-	-	-	-	-	-
2	FW			OWN	-	-	-	-	-	-	-
				PRE	-	-	-	-	-	-	-
C-F-2	I096900		B-14	ISI	-	-	-	-	-	-	-
C5.51	U		PIPE-TO-ELBOW	AUG	-	-	-	-	-	-	-
2	FW			OWN	-	-	-	-	-	-	-
				PRE	-	-	-	-	-	-	-
C-F-2	I097000		B-14	ISI	-	-	-	-	-	-	-
C5.51	U1		ELBOW-TO-PIPE	AUG	-	-	-	-	-	-	-
2	FW			OWN	-	-	-	-	-	-	-
				PRE	-	-	-	-	-	-	-
C-F-2	I097200	ISI/MT/MT-105	B-14	ISI	c	-	-	-	-	-	-
C5.51	U2	ISI/UT/UT-209	PIPE-TO-ELBOW	AUG	-	-	-	-	-	-	-
2	FW			OWN	-	-	-	-	-	-	-
				PRE	-	-	-	-	-	-	-
C-F-2	I097300		B-14	ISI	-	-	-	-	-	-	-
C5.51	V		ELBOW-TO-PIPE PEN. 404	AUG	-	-	-	-	-	-	-
2	FW			OWN	-	-	-	-	-	-	-
				PRE	-	-	-	-	-	-	-
C-F-2	I097600		B-13	ISI	-	-	-	-	-	-	-
C5.51	W		PIPE-TO-ELBOW (PEN 404)	AUG	-	-	-	-	-	-	-
2	FW			OWN	-	-	-	-	-	-	-
				PRE	-	-	-	-	-	-	-
C-F-2	I097800		B-13	ISI	-	-	-	-	-	-	-
C5.51	W1		ELBOW-TO-PIPE	AUG	-	-	-	-	-	-	-
2	FW			OWN	-	-	-	-	-	-	-
				PRE	-	-	-	-	-	-	-
C-F-2	I097900		B-13	ISI	-	-	-	-	-	-	-
C5.51	X		PIPE-TO-ELBOW	AUG	-	-	-	-	-	-	-
2	FW			OWN	-	-	-	-	-	-	-
				PRE	-	-	-	-	-	-	-
C-F-2	I098000		B-13	ISI	-	-	-	-	-	-	-
C5.51	X1		ELBOW-TO-PIPE	AUG	-	-	-	-	-	-	-
2	FW			OWN	-	-	-	-	-	-	-
				PRE	-	-	-	-	-	-	-
C-F-2	I098200		B-13	ISI	-	-	-	-	-	-	-
C5.51	X2		PIPE-TO-ELBOW	AUG	-	-	-	-	-	-	-
2	FW			OWN	-	-	-	-	-	-	-
				PRE	-	-	-	-	-	-	-

Category, ItemNO, Class	Summary / CompID / System	Scope / Method / Procedure	Iso No. Comp. Desc. Code Case		Period 1 00	Period 1 02	Period 2 03	Period 2 05	Period 2 06	Period 3 08	Period 3 09
C-F-2	I098300		B-13	ISI	-	-	-	-	-	-	-
C5.51	Y		ELBOW-TO-PIPE	AUG	-	-	-	-	-	-	-
2	FW			OWN	-	-	-	-	-	-	-
				PRE	-	-	-	-	-	-	-
C-F-2	I098400		B-13	ISI	-	-	-	-	-	-	-
C5.51	Y1		PIPE-TO-ELBOW	AUG	-	-	-	-	-	-	-
2	FW			OWN	-	-	-	-	-	-	-
				PRE	-	-	-	-	-	-	-
C-F-2	I098500		B-13	ISI	-	-	-	-	-	-	-
C5.51	Y2		ELBOW-TO-PIPE	AUG	-	-	-	-	-	-	-
2	FW			OWN	-	-	-	-	-	-	-
				PRE	-	-	-	-	-	-	-
C-F-2	I098700		B-13	ISI	-	-	-	-	-	-	-
C5.51	Z		PIPE-TO-ELBOW	AUG	-	-	-	-	-	-	-
2	FW			OWN	-	-	-	-	-	-	-
				PRE	-	-	-	-	-	-	-
C-F-2	I098800		B-13	ISI	-	-	-	-	-	-	-
C5.51	Z1		ELBOW-TO-PIPE	AUG	-	-	-	-	-	-	-
2	FW			OWN	-	-	-	-	-	-	-
				PRE	-	-	-	-	-	-	-
C-F-2	I098900		B-13	ISI	-	-	-	-	-	-	-
C5.51	AA-R		PIPE-TO-ELBOW	AUG	-	-	-	-	-	-	-
2	FW			OWN	-	-	-	-	-	-	-
				PRE	-	-	-	-	-	-	-
C-F-2	I099200		B-13	ISI	-	-	-	-	-	-	-
C5.51	AA1		ELBOW-TO-PIPE	AUG	-	-	-	-	-	-	-
2	FW			OWN	-	-	-	-	-	-	-
				PRE	-	-	-	-	-	-	-
C-F-2	I099300		B-13	ISI	-	-	-	-	-	-	-
C5.51	AA2		PIPE-TO-ELBOW	AUG	-	-	-	-	-	-	-
2	FW			OWN	-	-	-	-	-	-	-
				PRE	-	-	-	-	-	-	-
C-F-2	I099400		B-13	ISI	-	-	-	-	-	-	-
C5.51	AA3		ELBOW-TO-PIPE	AUG	-	-	-	-	-	-	-
2	FW			OWN	-	-	-	-	-	-	-
				PRE	-	-	-	-	-	-	-
C-F-2	I099500		B-13	ISI	-	-	-	-	-	-	-
C5.51	AA4-R		PIPE-TO-ELBOW	AUG	-	-	-	-	-	-	-
2	FW			OWN	-	-	-	-	-	-	-
				PRE	-	-	-	-	-	-	-

Category, ItemNO, Class	Summary / CompID / System	Scope / Method / Procedure	Iso No. Comp. Desc. Code Case		Period 1 00	Period 1 02	Period 2 03	Period 2 05	Period 2 06	Period 3 08	Period 3 09
C-F-2	I099600		B-13	ISI	-	-	-	-	-	-	-
C5.51	AA5		ELBOW-TO-PIPE	AUG	-	-	-	-	-	-	-
2	FW			OWN	-	-	-	-	-	-	-
				PRE	-	-	-	-	-	-	-
C-F-2	I099700		B-13	ISI	-	-	-	-	-	-	-
C5.51	AA6		PIPE-TO-REDUCER	AUG	-	-	-	-	-	-	-
2	FW			OWN	-	-	-	-	-	-	-
				PRE	-	-	-	-	-	-	-
C-F-2	I099800		B-13	ISI	-	-	-	-	-	-	-
C5.51	AA7-R		REDUCER-TO-ELBOW	AUG	-	-	-	-	-	-	-
2	FW			OWN	-	-	-	-	-	-	-
				PRE	-	-	-	-	-	-	-
C-F-2	I099900	ISI/PT/PT-106	B-13	ISI	-	-	r	s	-	-	-
C5.51	BB-R	ISI/UT/UT-209	ELBOW-TO-SAFE END (S/G-B)	AUG	-	-	-	-	-	-	-
2	FW			OWN	-	-	-	-	-	-	-
				PRE	-	-	-	-	-	-	-
C-F-2	I099910		B-13	ISI	-	-	-	-	-	-	-
C5.51	B-R		SAFE END-TO-NOZZLE (S/G-B)	AUG	-	-	-	-	-	-	-
2	FW			OWN	-	-	-	-	-	-	-
				PRE	-	-	-	-	-	-	-
C-F-2	I082700		B-9A	ISI	-	-	-	-	-	-	-
C5.81	G2-BC-1		6" BRANCH WELD	AUG	-	-	-	-	-	-	-
2	MS			OWN	-	-	-	-	-	-	-
				PRE	-	-	-	-	-	-	-
C-F-2	I082800		B-9A	ISI	-	-	-	-	-	-	-
C5.81	G2-BC-2		6" BRANCH WELD	AUG	-	-	-	-	-	-	-
2	MS			OWN	-	-	-	-	-	-	-
				PRE	-	-	-	-	-	-	-
C-F-2	I083000		B-9A	ISI	-	-	-	-	-	-	-
C5.81	G3-BC-1		6" BRANCH WELD	AUG	-	-	-	-	-	-	-
2	MS			OWN	-	-	-	-	-	-	-
				PRE	-	-	-	-	-	-	-
C-F-2	I083100		B-9A	ISI	-	-	-	-	-	-	-
C5.81	G3-BC-2		6" BRANCH WELD	AUG	-	-	-	-	-	-	-
2	MS			OWN	-	-	-	-	-	-	-
				PRE	-	-	-	-	-	-	-
C-F-2	I083200	ISI/MT/MT-105	B-9A	ISI	c	-	-	-	-	-	-
C5.81	G3-BC-3		6" BRANCH WELD	AUG	-	-	-	-	-	-	-
2	MS			OWN	-	-	-	-	-	-	-
				PRE	-	-	-	-	-	-	-

Category, ItemNO, Class	Summary / CompID / System	Scope / Method / Procedure	Iso No. Comp. Desc. Code Case		Period 1 00	Period 1 02	Period 2 03	Period 2 05	Period 2 06	Period 3 08	Period 3 09
C-F-2	I083300	ISI/MT/MT-105	B-9A	ISI	c	-	-	-	-	-	-
C5.81	G3-BC-4		6" BRANCH WELD	AUG	-	-	-	-	-	-	-
2	MS			OWN	-	-	-	-	-	-	-
				PRE	-	-	-	-	-	-	-
C-F-2	I083510		B-9A	ISI	-	-	-	-	-	-	-
C5.81	G4-BC-5		6" BRANCH WELD	AUG	-	-	-	-	-	-	-
2	MS			OWN	-	-	-	-	-	-	-
				PRE	-	-	-	-	-	-	-
C-F-2	I089300	ISI/MT/MT-105	B-10	ISI	c	-	-	-	-	-	-
C5.81	L2-BC-1		6" BRANCH WELD	AUG	-	-	-	-	-	-	-
2	MS			OWN	-	-	-	-	-	-	-
				PRE	-	-	-	-	-	-	-
C-F-2	I089400		B-10	ISI	-	-	-	-	-	-	-
C5.81	L2-BC-2		6" BRANCH WELD	AUG	-	-	-	-	-	-	-
2	MS			OWN	-	-	-	-	-	-	-
				PRE	-	-	-	-	-	-	-
C-F-2	I089600		B-10	ISI	-	-	-	-	-	-	-
C5.81	L3-BC-1		6" BRANCH WELD	AUG	-	-	-	-	-	-	-
2	MS			OWN	-	-	-	-	-	-	-
				PRE	-	-	-	-	-	-	-
C-F-2	I089700		B-10	ISI	-	-	-	-	-	-	-
C5.81	L3-BC-2		6" BRANCH WELD	AUG	-	-	-	-	-	-	-
2	MS			OWN	-	-	-	-	-	-	-
				PRE	-	-	-	-	-	-	-
C-F-2	I090000		B-10	ISI	-	-	-	-	-	-	-
C5.81	L3-BC-3		6" BRANCH WELD	AUG	-	-	-	-	-	-	-
2	MS			OWN	-	-	-	-	-	-	-
				PRE	-	-	-	-	-	-	-
C-F-2	I090100		B-10	ISI	-	-	-	-	-	-	-
C5.81	L3-BC-4		6" BRANCH WELD	AUG	-	-	-	-	-	-	-
2	MS			OWN	-	-	-	-	-	-	-
				PRE	-	-	-	-	-	-	-
C-F-2	I090120		B-10	ISI	-	-	-	-	-	-	-
C5.81	L3-BC-5		6" BRANCH WELD	AUG	-	-	-	-	-	-	-
2	MS			OWN	-	-	-	-	-	-	-
				PRE	-	-	-	-	-	-	-
C-H	I411100	ISI/VT/VT-109	L-1	ISI	c	-	B	-	-	b	-
C7.XX	MAINSTEAM INSIDE	ISI/VT/VT-109	CONTAINMENT	AUG	-	-	-	-	-	-	-
2	MS	ISI/VT/VT-109		OWN	-	-	-	-	-	-	-
				PRE	-	-	-	-	-	-	-

Category, ItemNO, Class	Summary / CompID / System	Scope / Method / Procedure	Iso No. Comp. Desc. Code Case		Period 1 00	Period 1 02	Period 2 03	Period 2 05	Period 2 06	Period 3 08	Period 3 09
C-H	I411200	ISI/VT/VT-109	L-1	ISI	-	c	-	b	-	b	-
C7.XX	MAINSTEAM OUTSIDE	ISI/VT/VT-109	CONTAINMENT	AUG	-	-	-	-	-	-	-
2	MS	ISI/VT/VT-109		OWN	-	-	-	-	-	-	-
				PRE	-	-	-	-	-	-	-
C-H	I411500	ISI/VT/VT-109	L-1	ISI	c	-	B	-	-	b	-
C7.XX	FW INSIDE CONTAINMENT	ISI/VT/VT-109	FEEDWATER SYSTEM INCV	AUG	-	-	-	-	-	-	-
2	FW	ISI/VT/VT-109		OWN	-	-	-	-	-	-	-
				PRE	-	-	-	-	-	-	-
C-H	I411600	ISI/VT/VT-109	L-1	ISI	c	-	-	b	-	b	-
C7.XX	FW OUTSIDE CONTAINMENT	ISI/VT/VT-109	FEEDWATER SYSTEM LEAKAGE EXAMINATION	AUG	-	-	-	-	-	-	-
2	FW	ISI/VT/VT-109		OWN	-	-	-	-	-	-	-
				PRE	-	-	-	-	-	-	-
C-H	I412300	ISI/VT/VT-109	L-1	ISI	-	c	B	-	-	b	-
C7.XX	STEAM GEN BLOWDOWN	ISI/VT/VT-109	INSIDE CONTAINMENT	AUG	-	-	-	-	-	-	-
2	SG-BD			OWN	-	-	-	-	-	-	-
				PRE	-	-	-	-	-	-	-
C-H	I412400	ISI/VT/VT-109	L-1	ISI	c	-	B	-	-	b	-
C7.XX	STEAM GEN BLOWDOWN	ISI/VT/VT-109	OUTSIDE CONTAINMENT	AUG	-	-	-	-	-	-	-
2	SG-BD	ISI/VT/VT-109		OWN	-	-	-	-	-	-	-
				PRE	-	-	-	-	-	-	-
C-H	I412500	ISI/VT/VT-109	L-1	ISI	c	-	-	b	-	b	-
C7.XX	SAFETY INJECTION "A" PUMP	ISI/VT/VT-109	IN/OUT CONTAINMENT	AUG	-	-	-	-	-	-	-
2	SI	ISI/VT/VT-109		OWN	-	-	-	-	-	-	-
				PRE	-	-	-	-	-	-	-
C-H	I412600	ISI/VT/VT-109	L-1	ISI	c	-	-	b	-	b	-
C7.XX	SAFETY INJECTION "B" PUMP	ISI/VT/VT-109	IN/OUT CONTAINMENT	AUG	-	-	-	-	-	-	-
2	SI	ISI/VT/VT-109		OWN	-	-	-	-	-	-	-
				PRE	-	-	-	-	-	-	-
C-H	I412700	ISI/VT/VT-109	L-1	ISI	p	c	-	b	-	b	-
C7.XX	SAFETY INJECTION "C" PUMP	ISI/VT/VT-108	OUTSIDE CONTAINMENT	AUG	-	-	-	-	-	-	-
2	SI	ISI/VT/VT-109		OWN	-	-	-	-	-	-	-
		ISI/VT/VT-109		PRE	-	-	-	-	-	-	-
C-H	I412800	ISI/VT/VT-109	L-1	ISI	c	-	B	-	-	b	-
C7.XX	SAFETY INJECTION	ISI/VT/VT-109	ACCUMULATOR 1 (A)	AUG	-	-	-	-	-	-	-
2	SI	ISI/VT/VT-109		OWN	-	-	-	-	-	-	-
				PRE	-	-	-	-	-	-	-
C-H	I412900	ISI/VT/VT-109	L-1	ISI	c	-	B	-	-	b	-
C7.XX	SAFETY INJECTION	ISI/VT/VT-109	ACCUMULATOR 2 (B)	AUG	-	-	-	-	-	-	-
2	SI	ISI/VT/VT-109		OWN	-	-	-	-	-	-	-
				PRE	-	-	-	-	-	-	-

Category, ItemNO, Class	Summary / CompID / System	Scope / Method / Procedure	Iso No. Comp. Desc. Code Case		Period 1 00	Period 1 02	Period 2 03	Period 2 05	Period 2 06	Period 3 08	Period 3 09
C-H	I413000	ISI/VT/VT-109	L-1	ISI	c	-	-	b	-	b	-
C7.XX	CONTAINMENT SPRAY	ISI/VT/VT-109	A PUMP DISCHARGE	AUG	-	-	-	-	-	-	-
2	CS	ISI/VT/VT-109		OWN	-	-	-	-	-	-	-
				PRE	-	-	-	-	-	-	-
C-H	I413100	ISI/VT/VT-109	L-1	ISI	c	-	-	b	-	b	-
C7.XX	CONTAINMENT SPRAY	ISI/VT/VT-109	B PUMP DISCHARGE	AUG	-	-	-	-	-	-	-
2	CS	ISI/VT/VT-109		OWN	-	-	-	-	-	-	-
				PRE	-	-	-	-	-	-	-
C-H	I413150	ISI/VT/VT-109	L-1	ISI	c	-	B	-	-	b	-
C7.XX	SPRAY ADDITIVE	ISI/VT/VT-109	NOAH TANK	AUG	-	-	-	-	-	-	-
2	CS	ISI/VT/VT-109		OWN	-	-	-	-	-	-	-
				PRE	-	-	-	-	-	-	-
C-H	I413200	ISI/VT/VT-109	L-1	ISI	-	c	-	b	-	b	-
C7.XX	RHR LOW PRESSURE	ISI/VT/VT-109	"A" PUMP	AUG	-	-	-	-	-	-	-
2	RHR	ISI/VT/VT-109		OWN	-	-	-	-	-	-	-
				PRE	-	-	-	-	-	-	-
C-H	I413300	ISI/VT/VT-109	L-1	ISI	-	c	-	b	-	b	-
C7.XX	RHR LOW PRESSURE	ISI/VT/VT-109	"B" PUMP	AUG	-	-	-	-	-	-	-
2	RHR	ISI/VT/VT-109		OWN	-	-	-	-	-	-	-
		ISI/VT/VT-109		PRE	-	-	-	-	-	-	-
C-H	I413400	ISI/VT/VT-109	L-1	ISI	-	c	-	b	-	b	-
C7.XX	RHR PUMP "A"	ISI/VT/VT-109	IN/OUT CONT.	AUG	-	-	-	-	-	-	-
2	RHR			OWN	-	-	-	-	-	-	-
				PRE	-	-	-	-	-	-	-
C-H	I413500	ISI/VT/VT-109	L-1	ISI	-	c	-	b	-	b	-
C7.XX	RHR PUMP "B"	ISI/VT/VT-109	IN/OUT CONT.	AUG	-	-	-	-	-	-	-
2	RHR			OWN	-	-	-	-	-	-	-
				PRE	-	-	-	-	-	-	-
C-H	I414600	ISI/VT/VT-109	L-1	ISI	-	c	-	b	-	b	-
C7.XX	CHARGING & SEAL WATER	ISI/VT/VT-109	FROM PUMPS (IN/OUT CV)	AUG	-	-	-	-	-	-	-
2	CVCS			OWN	-	-	-	-	-	-	-
				PRE	-	-	-	-	-	-	-
C-H	I414700	ISI/VT/VT-109	L-1	ISI	c	-	-	b	-	b	-
C7.XX	LETDOWN SYSTEM	ISI/VT/VT-109	IN/OUT CONTAINMENT	AUG	-	-	-	-	-	-	-
2	CVCS	ISI/VT/VT-109		OWN	-	-	-	-	-	-	-
				PRE	-	-	-	-	-	-	-
C-H	I415600	ISI/VT/VT-109	*	ISI	-	c	B	-	-	b	-
C7.XX	PRESSURIZER (TRC01)	ISI/VT/VT-109	CLASS 2 INSTRUMENTATION	AUG	-	-	-	-	-	-	-
2	RC			OWN	-	-	-	-	-	-	-
				PRE	-	-	-	-	-	-	-

Category, ItemNO, Class	Summary / CompID / System	Scope / Method / Procedure	Iso No. Comp. Desc. Code Case		Period 1 00	Period 1 02	Period 2 03	Period 2 05	Period 2 06	Period 3 08	Period 3 09
C-H	I415650	ISI/VT/VT-109	*	ISI	-	c	-	b	-	b	-
C7.XX	RPV (RPC01)	ISI/VT/VT-109	CLASS 2 INSTRUMENTATION	AUG	-	-	-	-	-	-	-
2	RC			OWN	-	-	-	-	-	-	-
				PRE	-	-	-	-	-	-	-
C-H	I414900	ISI/VT/VT-109	L-1	ISI	-	-	-	-	-	-	-
IN	BORIC ACID TANKS &		PIPING - Q Class - Not Req.	AUG	-	-	-	-	-	-	-
Q	CVCS			OWN	-	-	-	-	-	-	-
				PRE	-	-	-	-	-	-	-
C-H	I414950		L-1	ISI	-	-	-	-	-	-	-
IN	BA STORAGE TANK DISCHARGE		SEE SUM # 414900	AUG	-	-	-	-	-	-	-
Q	CVCS			OWN	-	-	-	-	-	-	-
				PRE	-	-	-	-	-	-	-
D-A	I555000		C-41	ISI	-	-	-	-	-	-	-
D1.10	CCW1A-W (IA)		INTEGRAL ATTACHMENT	AUG	-	-	-	-	-	-	-
3	AC			OWN	-	-	-	-	-	-	-
				PRE	-	-	-	-	-	-	-
D-A	I555100		C-41	ISI	-	-	-	-	-	-	-
D1.10	CCW1A-E (IA)		INTEGRAL ATTACHMENT	AUG	-	-	-	-	-	-	-
3	AC			OWN	-	-	-	-	-	-	-
				PRE	-	-	-	-	-	-	-
D-A	I555200	ISI/VT/VT-103	C-41	ISI	-	-	-	-	s	-	-
D1.10	CCW1B-W (IA)		INTEGRAL ATTACHMENT	AUG	-	-	-	-	-	-	-
3	AC			OWN	-	-	-	-	-	-	-
				PRE	-	-	-	-	-	-	-
D-A	I555300		C-41	ISI	-	-	-	-	-	-	-
D1.10	CCW1B-E (IA)		INTEGRAL ATTACHMENT	AUG	-	-	-	-	-	-	-
3	AC			OWN	-	-	-	-	-	-	-
				PRE	-	-	-	-	-	-	-
D-A	I555400	ISI/VT/VT-103	C-42	ISI	-	-	-	-	-	s	-
D1.10	CCWST-1 (IA)		INTEGRAL ATTACHMENT	AUG	-	-	-	-	-	-	-
3	AC			OWN	-	-	-	-	-	-	-
				PRE	-	-	-	-	-	-	-
D-A	I555500		C-42	ISI	-	-	-	-	-	-	-
D1.10	CCWST-2 (IA)		INTEGRAL ATTACHMENT	AUG	-	-	-	-	-	-	-
3	AC			OWN	-	-	-	-	-	-	-
				PRE	-	-	-	-	-	-	-
D-A	I555600	ISI/VT/VT-103	C-37	ISI	-	-	-	-	s	-	-
D1.10	DGHTX-1A (IA)		INTEGRAL ATTACHMENT	AUG	-	-	-	-	-	-	-
3	DG			OWN	-	-	-	-	-	-	-
				PRE	-	-	-	-	-	-	-

Category, ItemNO, Class	Summary / CompID / System	Scope / Method / Procedure	Iso No. Comp. Desc. Code Case		Period 1 00	Period 1 02	Period 2 03	Period 2 05	Period 2 06	Period 3 08	Period 3 09
D-A	I555700		C-37	ISI	-	-	-	-	-	-	-
D1.10	DGHTX-2A (IA)		INTEGRAL ATTACHMENT	AUG	-	-	-	-	-	-	-
3	DG			OWN	-	-	-	-	-	-	-
				PRE	-	-	-	-	-	-	-
D-A	I555800		C-38	ISI	-	-	-	-	-	-	-
D1.10	DGHTX-1B (IA)		INTEGRAL ATTACHMENT	AUG	-	-	-	-	-	-	-
3	DG			OWN	-	-	-	-	-	-	-
				PRE	-	-	-	-	-	-	-
D-A	I555900		C-38	ISI	-	-	-	-	-	-	-
D1.10	DGHTX-2B (IA)		INTEGRAL ATTACHMENT	AUG	-	-	-	-	-	-	-
3	DG			OWN	-	-	-	-	-	-	-
				PRE	-	-	-	-	-	-	-
D-A	I500100		C-39	ISI	-	-	-	-	-	-	-
D1.20	DGIN-1A (IA)		INTEGRAL ATTACHMENT	AUG	-	-	-	-	-	-	-
3	DG			OWN	-	-	-	-	-	-	-
				PRE	-	-	-	-	-	-	-
D-A	I500107	ISI/VT/VT-103	C-39	ISI	-	-	-	-	-	-	s
D1.20	DGEX-1A (IA)		INTEGRAL ATTACHMENT	AUG	-	-	-	-	-	-	-
3	DG			OWN	-	-	-	-	-	-	-
				PRE	-	-	-	-	-	-	-
D-A	I500110		C-40	ISI	-	-	-	-	-	-	-
D1.20	DGIN-1B (IA)		INTEGRAL ATTACHMENT	AUG	-	-	-	-	-	-	-
3	DG			OWN	-	-	-	-	-	-	-
				PRE	-	-	-	-	-	-	-
D-A	I500117		C-40	ISI	-	-	-	-	-	-	-
D1.20	DGEX-1B (IA)		INTEGRAL ATTACHMENT	AUG	-	-	-	-	-	-	-
3	DG			OWN	-	-	-	-	-	-	-
				PRE	-	-	-	-	-	-	-
D-A	I500120		C-35	ISI	-	-	-	-	-	-	-
D1.20	DG-1A (IA)		INTEGRAL ATTACHMENT	AUG	-	-	-	-	-	-	-
3	DG			OWN	-	-	-	-	-	-	-
				PRE	-	-	-	-	-	-	-
D-A	I500130		C-35	ISI	-	-	-	-	-	-	-
D1.20	DG-2A (IA)		INTEGRAL ATTACHMENT	AUG	-	-	-	-	-	-	-
3	DG			OWN	-	-	-	-	-	-	-
				PRE	-	-	-	-	-	-	-
D-A	I500140		C-36	ISI	-	-	-	-	-	-	-
D1.20	DG-1B (IA)		INTEGRAL ATTACHMENT	AUG	-	-	-	-	-	-	-
3	DG			OWN	-	-	-	-	-	-	-
				PRE	-	-	-	-	-	-	-

Category, ItemNO, Class	Summary / CompID / System	Scope / Method / Procedure	Iso No. Comp. Desc. Code Case		Period 1 00	Period 1 02	Period 2 03	Period 2 05	Period 2 06	Period 3 08	Period 3 09
D-A	I500150		C-36	ISI	-	-	-	-	-	-	-
D1.20	DG-2B (IA)		INTEGRAL ATTACHMENT	AUG	-	-	-	-	-	-	-
3	DG			OWN	-	-	-	-	-	-	-
				PRE	-	-	-	-	-	-	-
D-A	I500200		C-2	ISI	-	-	-	-	-	-	-
D1.20	CCU-86 (IA)		INTEGRAL ATTACHMENT	AUG	-	-	-	-	-	-	-
3	AC			OWN	-	-	-	-	-	-	-
				PRE	-	-	-	-	-	-	-
D-A	I500230	ISI/VT/VT-103	C-2	ISI	c	-	-	-	-	-	-
D1.20	CCU-89 (IA)		INTEGRAL ATTACHMENT	AUG	-	-	-	-	-	-	-
3	AC			OWN	-	-	-	-	-	-	-
				PRE	-	-	-	-	-	-	-
D-A	I500240		C-2	ISI	-	-	-	-	-	-	-
D1.20	CCU-90 (IA)		INTEGRAL ATTACHMENT	AUG	-	-	-	-	-	-	-
3	AC			OWN	-	-	-	-	-	-	-
				PRE	-	-	-	-	-	-	-
D-A	I500300	ISI/VT/VT-103	C-3	ISI	-	c	-	-	-	-	-
D1.20	CCU-102 (IA)		INTEGRAL ATTACHMENT	AUG	-	-	-	-	-	-	-
3	AC			OWN	-	-	-	-	-	-	-
				PRE	-	-	-	-	-	-	-
D-A	I500330		C-3	ISI	-	-	-	-	-	-	-
D1.20	CCU-107 (IA)		INTEGRAL ATTACHMENT	AUG	-	-	-	-	-	-	-
3	AC			OWN	-	-	-	-	-	-	-
				PRE	-	-	-	-	-	-	-
D-A	I500460		C-3	ISI	-	-	-	-	-	-	-
D1.20	CCU-179 (IA)		INTEGRAL ATTACHMENT	AUG	-	-	-	-	-	-	-
3	AC			OWN	-	-	-	-	-	-	-
				PRE	-	-	-	-	-	-	-
D-A	I500470		C-3	ISI	-	-	-	-	-	-	-
D1.20	CCU-180 (IA)		INTEGRAL ATTACHMENT	AUG	-	-	-	-	-	-	-
3	AC			OWN	-	-	-	-	-	-	-
				PRE	-	-	-	-	-	-	-
D-A	I500520		C-4	ISI	-	-	-	-	-	-	-
D1.20	CCU-137 (IA)		INTEGRAL ATTACHMENT	AUG	-	-	-	-	-	-	-
3	AC			OWN	-	-	-	-	-	-	-
				PRE	-	-	-	-	-	-	-
D-A	I500530		C-4	ISI	-	-	-	-	-	-	-
D1.20	CCU-138 (IA)		INTEGRAL ATTACHMENT	AUG	-	-	-	-	-	-	-
3	AC			OWN	-	-	-	-	-	-	-
				PRE	-	-	-	-	-	-	-

Category, ItemNO, Class	Summary / CompID / System	Scope / Method / Procedure	Iso No. Comp. Desc. Code Case		Period 1 00	Period 1 02	Period 2 03	Period 2 05	Period 2 06	Period 3 08	Period 3 09
D-A	I500540		C-4	ISI	-	-	-	-	-	-	-
D1.20	CCU-139 (IA)		INTEGRAL ATTACHMENT	AUG	-	-	-	-	-	-	-
3	AC			OWN	-	-	-	-	-	-	-
				PRE	-	-	-	-	-	-	-
D-A	I500610		C-4	ISI	-	-	-	-	-	-	-
D1.20	CCU-146 (IA)		INTEGRAL ATTACHMENT	AUG	-	-	-	-	-	-	-
3	AC			OWN	-	-	-	-	-	-	-
				PRE	-	-	-	-	-	-	-
D-A	I500710		C-5	ISI	-	-	-	-	-	-	-
D1.20	CCU-151 (IA)		INTEGRAL ATTACHMENT	AUG	-	-	-	-	-	-	-
3	AC			OWN	-	-	-	-	-	-	-
				PRE	-	-	-	-	-	-	-
D-A	I500760		C-6	ISI	-	-	-	-	-	-	-
D1.20	CCU-156 (IA)		INTEGRAL ATTACHMENT	AUG	-	-	-	-	-	-	-
3	AC			OWN	-	-	-	-	-	-	-
				PRE	-	-	-	-	-	-	-
D-A	I500770		C-6	ISI	-	-	-	-	-	-	-
D1.20	CCU-158 (IA)		INTEGRAL ATTACHMENT	AUG	-	-	-	-	-	-	-
3	AC			OWN	-	-	-	-	-	-	-
				PRE	-	-	-	-	-	-	-
D-A	I500790		C-6	ISI	-	-	-	-	-	-	-
D1.20	CCU-160 (IA)		INTEGRAL ATTACHMENT	AUG	-	-	-	-	-	-	-
3	AC			OWN	-	-	-	-	-	-	-
				PRE	-	-	-	-	-	-	-
D-A	I500820		C-6	ISI	-	-	-	-	-	-	-
D1.20	CCU-167 (IA)		INTEGRAL ATTACHMENT	AUG	-	-	-	-	-	-	-
3	AC			OWN	-	-	-	-	-	-	-
				PRE	-	-	-	-	-	-	-
D-A	I500840		C-6	ISI	-	-	-	-	-	-	-
D1.20	CCU-169 (IA)		INTEGRAL ATTACHMENT	AUG	-	-	-	-	-	-	-
3	AC			OWN	-	-	-	-	-	-	-
				PRE	-	-	-	-	-	-	-
D-A	I500850		C-6	ISI	-	-	-	-	-	-	-
D1.20	CCU-170 (IA)		INTEGRAL ATTACHMENT	AUG	-	-	-	-	-	-	-
3	AC			OWN	-	-	-	-	-	-	-
				PRE	-	-	-	-	-	-	-
D-A	I500910		C-7	ISI	-	-	-	-	-	-	-
D1.20	CCU-128 (IA)		INTEGRAL ATTACHMENT	AUG	-	-	-	-	-	-	-
3	AC			OWN	-	-	-	-	-	-	-
				PRE	-	-	-	-	-	-	-

Category, ItemNO, Class	Summary / CompID / System	Scope / Method / Procedure	Iso No. Comp. Desc. Code Case		Period 1 00	Period 1 02	Period 2 03	Period 2 05	Period 2 06	Period 3 08	Period 3 09
D-A	I500920		C-7	ISI	-	-	-	-	-	-	-
D1.20	CCU-129 (IA)		INTEGRAL ATTACHMENT	AUG	-	-	-	-	-	-	-
3	AC			OWN	-	-	-	-	-	-	-
				PRE	-	-	-	-	-	-	-
D-A	I500960	ISI/VT/VT-103	C-7	ISI	-	-	-	s	-	-	-
D1.20	CCU-218 (IA)		INTEGRAL ATTACHMENT	AUG	-	-	-	-	-	-	-
3	AC			OWN	-	-	-	-	-	-	-
				PRE	-	-	-	-	-	-	-
D-A	I501030		C-7	ISI	-	-	-	-	-	-	-
D1.20	CCU-164 (IA)		INTEGRAL ATTACHMENT	AUG	-	-	-	-	-	-	-
3	AC			OWN	-	-	-	-	-	-	-
				PRE	-	-	-	-	-	-	-
D-A	I501110		C-5	ISI	-	-	-	-	-	-	-
D1.20	CCU-228 (IA)		INTEGRAL ATTACHMENT	AUG	-	-	-	-	-	-	-
3	AC			OWN	-	-	-	-	-	-	-
				PRE	-	-	-	-	-	-	-
D-A	I501600	ISI/VT/VT-103	C-11	ISI	-	-	-	-	s	-	-
D1.20	SWU-158 (IA)		INTEGRAL ATTACHMENT	AUG	-	-	-	-	-	-	-
3	SW			OWN	-	-	-	-	-	-	-
				PRE	-	-	-	-	-	-	-
D-A	I501630		C-11	ISI	-	-	-	-	-	-	-
D1.20	SWU-161 (IA)		INTEGRAL ATTACHMENT	AUG	-	-	-	-	-	-	-
3	SW			OWN	-	-	-	-	-	-	-
				PRE	-	-	-	-	-	-	-
D-A	I501660	PSI/VT/VT-103	C-11	ISI	-	-	-	-	-	-	-
D1.20	SWU-164 (IA)	PSI/VT/VT-103	INTEGRAL ATTACHMENT	AUG	-	-	-	-	-	-	-
3	SW			OWN	-	-	-	-	-	-	-
				PRE	-	c	-	b	-	-	-
D-A	I501870		C-12	ISI	-	-	-	-	-	-	-
D1.20	SWU-191 (IA)		INTEGRAL ATTACHMENT	AUG	-	-	-	-	-	-	-
3	SW			OWN	-	-	-	-	-	-	-
				PRE	-	-	-	-	-	-	-
D-A	I501890		C-12	ISI	-	-	-	-	-	-	-
D1.20	SWU-193 (IA)		INTEGRAL ATTACHMENT	AUG	-	-	-	-	-	-	-
3	SW			OWN	-	-	-	-	-	-	-
				PRE	-	-	-	-	-	-	-
D-A	I501900		C-12	ISI	-	-	-	-	-	-	-
D1.20	SWU-194 (IA)		INTEGRAL ATTACHMENT	AUG	-	-	-	-	-	-	-
3	SW			OWN	-	-	-	-	-	-	-
				PRE	-	-	-	-	-	-	-

Category, ItemNO, Class	Summary / CompID / System	Scope / Method / Procedure	Iso No. Comp. Desc. Code Case		Period 1 00	Period 1 02	Period 2 03	Period 2 05	Period 2 06	Period 3 08	Period 3 09
D-A	I501920		C-12	ISI	-	-	-	-	-	-	-
D1.20	SWU-196 (IA)		INTEGRAL ATTACHMENT	AUG	-	-	-	-	-	-	-
3	SW			OWN	-	-	-	-	-	-	-
				PRE	-	-	-	-	-	-	-
D-A	I501930		C-12	ISI	-	-	-	-	-	-	-
D1.20	SWU-197 (IA)		INTEGRAL ATTACHMENT	AUG	-	-	-	-	-	-	-
3	SW			OWN	-	-	-	-	-	-	-
				PRE	-	-	-	-	-	-	-
D-A	I501940		C-12	ISI	-	-	-	-	-	-	-
D1.20	SWU-198 (IA)		INTEGRAL ATTACHMENT	AUG	-	-	-	-	-	-	-
3	SW			OWN	-	-	-	-	-	-	-
				PRE	-	-	-	-	-	-	-
D-A	I502039		C-12	ISI	-	-	-	-	-	-	-
D1.20	SWU-208 (IA)		INTEGRAL ATTACHMENT	AUG	-	-	-	-	-	-	-
3	SW			OWN	-	-	-	-	-	-	-
				PRE	-	-	-	-	-	-	-
D-A	I502080		C-12	ISI	-	-	-	-	-	-	-
D1.20	SWU-212 (IA)		INTEGRAL ATTACHMENT	AUG	-	-	-	-	-	-	-
3	SW			OWN	-	-	-	-	-	-	-
				PRE	-	-	-	-	-	-	-
D-A	I502090		C-12	ISI	-	-	-	-	-	-	-
D1.20	SWU-213 (IA)		INTEGRAL ATTACHMENT	AUG	-	-	-	-	-	-	-
3	SW			OWN	-	-	-	-	-	-	-
				PRE	-	-	-	-	-	-	-
D-A	I502270		C-13	ISI	-	-	-	-	-	-	-
D1.20	SWU-251 (IA)		INTEGRAL ATTACHMENT	AUG	-	-	-	-	-	-	-
3	SW			OWN	-	-	-	-	-	-	-
				PRE	-	-	-	-	-	-	-
D-A	I502280		C-13	ISI	-	-	-	-	-	-	-
D1.20	SWU-252 (IA)		INTEGRAL ATTACHMENT	AUG	-	-	-	-	-	-	-
3	SW			OWN	-	-	-	-	-	-	-
				PRE	-	-	-	-	-	-	-
D-A	I502400		C-14	ISI	-	-	-	-	-	-	-
D1.20	SWU-291 (IA)		INTEGRAL ATTACHMENT	AUG	-	-	-	-	-	-	-
3	SW			OWN	-	-	-	-	-	-	-
				PRE	-	-	-	-	-	-	-
D-A	I502440		C-14	ISI	-	-	-	-	-	-	-
D1.20	SWU-295 (IA)		INTEGRAL ATTACHMENT	AUG	-	-	-	-	-	-	-
3	SW			OWN	-	-	-	-	-	-	-
				PRE	-	-	-	-	-	-	-

Category, ItemNO, Class	Summary / CompID / System	Scope / Method / Procedure	Iso No. Comp. Desc. Code Case		Period 1 00	Period 1 02	Period 2 03	Period 2 05	Period 2 06	Period 3 08	Period 3 09
D-A	I502480		C-14	ISI	-	-	-	-	-	-	-
D1.20	SWU-299 (IA)		INTEGRAL ATTACHMENT	AUG	-	-	-	-	-	-	-
3	SW			OWN	-	-	-	-	-	-	-
				PRE	-	-	-	-	-	-	-
D-A	I502530		C-14	ISI	-	-	-	-	-	-	-
D1.20	SWU-312 (IA)		INTEGRAL ATTACHMENT	AUG	-	-	-	-	-	-	-
3	SW			OWN	-	-	-	-	-	-	-
				PRE	-	-	-	-	-	-	-
D-A	I502720		C-16	ISI	-	-	-	-	-	-	-
D1.20	SWU-316 (IA)		INTEGRAL ATTACHMENT	AUG	-	-	-	-	-	-	-
3	SW			OWN	-	-	-	-	-	-	-
				PRE	-	-	-	-	-	-	-
D-A	I502790	ISI/VT/VT-103	C-16	ISI	-	c	-	-	-	-	-
D1.20	SWU-323 (IA)		INTEGRAL ATTACHMENT	AUG	-	-	-	-	-	-	-
3	SW			OWN	-	-	-	-	-	-	-
				PRE	-	-	-	-	-	-	-
D-A	I502825	ISI/VT/VT-103	C-16	ISI	H	-	-	-	-	-	-
D1.20	SWU-327 (IA)		INTEGRAL ATTACHMENT	AUG	-	-	-	-	-	-	-
3	SW			OWN	-	-	-	-	-	-	-
				PRE	-	-	-	-	-	-	-
D-A	I502840		C-16	ISI	-	-	-	-	-	-	-
D1.20	SWU-328 (IA)		INTEGRAL ATTACHMENT	AUG	-	-	-	-	-	-	-
3	SW			OWN	-	-	-	-	-	-	-
				PRE	-	-	-	-	-	-	-
D-A	I502930		C-16B	ISI	-	-	-	-	-	-	-
D1.20	SWU-337 (IA)		INTEGRAL ATTACHMENT	AUG	-	-	-	-	-	-	-
3	SW			OWN	-	-	-	-	-	-	-
				PRE	-	-	-	-	-	-	-
D-A	I502960		C-16B	ISI	-	-	-	-	-	-	-
D1.20	SWU-340 (IA)		INTEGRAL ATTACHMENT	AUG	-	-	-	-	-	-	-
3	SW			OWN	-	-	-	-	-	-	-
				PRE	-	-	-	-	-	-	-
D-A	I503000	ISI/VT/VT-103	C-16B	ISI	-	-	-	-	s	-	-
D1.20	SWU-344 (IA)		INTEGRAL ATTACHMENT	AUG	-	-	-	-	-	-	-
3	SW			OWN	-	-	-	-	-	-	-
				PRE	-	-	-	-	-	-	-
D-A	I503120		C-16A	ISI	-	-	-	-	-	-	-
D1.20	SWU-349 (IA)		INTEGRAL ATTACHMENT	AUG	-	-	-	-	-	-	-
3	SW			OWN	-	-	-	-	-	-	-
				PRE	-	-	-	-	-	-	-

Category, ItemNO, Class	Summary / CompID / System	Scope / Method / Procedure	Iso No. Comp. Desc. Code Case		Period 1 00	Period 1 02	Period 2 03	Period 2 05	Period 2 06	Period 3 08	Period 3 09
D-A	I503130		C-16A	ISI	-	-	-	-	-	-	-
D1.20	SWU-350 (IA)		INTEGRAL ATTACHMENT	AUG	-	-	-	-	-	-	-
3	SW			OWN	-	-	-	-	-	-	-
				PRE	-	-	-	-	-	-	-
D-A	I503170		C-16A	ISI	-	-	-	-	-	-	-
D1.20	SWU-354 (IA)		INTEGRAL ATTACHMENT	AUG	-	-	-	-	-	-	-
3	SW			OWN	-	-	-	-	-	-	-
				PRE	-	-	-	-	-	-	-
D-A	I503320		C-17	ISI	-	-	-	-	-	-	-
D1.20	SWU-618 (N729) (IA)		INTEGRAL ATTACHMENT	AUG	-	-	-	-	-	-	-
3	SW			OWN	-	-	-	-	-	-	-
				PRE	-	-	-	-	-	-	-
D-A	I503370	ISI/VT/VT-103	C-17	ISI	-	-	-	-	s	-	-
D1.20	SWU-623 (N734) (IA)		INTEGRAL ATTACHMENT	AUG	-	-	-	-	-	-	-
3	SW			OWN	-	-	-	-	-	-	-
				PRE	-	-	-	-	-	-	-
D-A	I503380		C-17	ISI	-	-	-	-	-	-	-
D1.20	SWU-624 (N735) (IA)		INTEGRAL ATTACHMENT	AUG	-	-	-	-	-	-	-
3	SW			OWN	-	-	-	-	-	-	-
				PRE	-	-	-	-	-	-	-
D-A	I503390		C-17	ISI	-	-	-	-	-	-	-
D1.20	SWU-625 (N736) (IA)		INTEGRAL ATTACHMENT	AUG	-	-	-	-	-	-	-
3	SW			OWN	-	-	-	-	-	-	-
				PRE	-	-	-	-	-	-	-
D-A	I503400		C-17	ISI	-	-	-	-	-	-	-
D1.20	SWU-626 (N737) (IA)		INTEGRAL ATTACHMENT	AUG	-	-	-	-	-	-	-
3	SW			OWN	-	-	-	-	-	-	-
				PRE	-	-	-	-	-	-	-
D-A	I503450		C-17	ISI	-	-	-	-	-	-	-
D1.20	SWU-631 (N742) (IA)		INTEGRAL ATTACHMENT	AUG	-	-	-	-	-	-	-
3	SW			OWN	-	-	-	-	-	-	-
				PRE	-	-	-	-	-	-	-
D-A	I503460		C-17	ISI	-	-	-	-	-	-	-
D1.20	SWU-632 (N743) (IA)		INTEGRAL ATTACHMENT	AUG	-	-	-	-	-	-	-
3	SW			OWN	-	-	-	-	-	-	-
				PRE	-	-	-	-	-	-	-
D-A	I503470	ISI/VT/VT-103	C-17	ISI	-	-	-	-	s	-	-
D1.20	SWU-633 (N744) (IA)		INTEGRAL ATTACHMENT	AUG	-	-	-	-	-	-	-
3	SW			OWN	-	-	-	-	-	-	-
				PRE	-	-	-	-	-	-	-

Category, ItemNO, Class	Summary / CompID / System	Scope / Method / Procedure	Iso No. Comp. Desc. Code Case		Period 1 00	Period 1 02	Period 2 03	Period 2 05	Period 2 06	Period 3 08	Period 3 09
D-A	I503480		C-17	ISI	-	-	-	-	-	-	-
D1.20	SWU-634 (N745) (IA)		INTEGRAL ATTACHMENT	AUG	-	-	-	-	-	-	-
3	SW			OWN	-	-	-	-	-	-	-
				PRE	-	-	-	-	-	-	-
D-A	I503490		C-17	ISI	-	-	-	-	-	-	-
D1.20	SWU-635 (N746) (IA)		INTEGRAL ATTACHMENT	AUG	-	-	-	-	-	-	-
3	SW			OWN	-	-	-	-	-	-	-
				PRE	-	-	-	-	-	-	-
D-A	I503500		C-17	ISI	-	-	-	-	-	-	-
D1.20	SWU-636 (N747) (IA)		INTEGRAL ATTACHMENT	AUG	-	-	-	-	-	-	-
3	SW			OWN	-	-	-	-	-	-	-
				PRE	-	-	-	-	-	-	-
D-A	I503510		C-17	ISI	-	-	-	-	-	-	-
D1.20	SWU-641 (N750) (IA)		INTEGRAL ATTACHMENT	AUG	-	-	-	-	-	-	-
3	SW			OWN	-	-	-	-	-	-	-
				PRE	-	-	-	-	-	-	-
D-A	I503620		C-18	ISI	-	-	-	-	-	-	-
D1.20	SWU-384 (IA)		INTEGRAL ATTACHMENT	AUG	-	-	-	-	-	-	-
3	SW			OWN	-	-	-	-	-	-	-
				PRE	-	-	-	-	-	-	-
D-A	I503640		C-18	ISI	-	-	-	-	-	-	-
D1.20	SWU-386 (IA)		INTEGRAL ATTACHMENT	AUG	-	-	-	-	-	-	-
3	SW			OWN	-	-	-	-	-	-	-
				PRE	-	-	-	-	-	-	-
D-A	I503680		C-18	ISI	-	-	-	-	-	-	-
D1.20	SWU-390 (IA)		INTEGRAL ATTACHMENT	AUG	-	-	-	-	-	-	-
3	SW			OWN	-	-	-	-	-	-	-
				PRE	-	-	-	-	-	-	-
D-A	I505000		C-1F	ISI	-	-	-	-	-	-	-
D1.20	AFU-8 (IA)		INTEGRAL ATTACHMENT	AUG	-	-	-	-	-	-	-
3	AFW			OWN	-	-	-	-	-	-	-
				PRE	-	-	-	-	-	-	-
D-A	I505010		C-1F	ISI	-	-	-	-	-	-	-
D1.20	AFU-9 (IA)		INTEGRAL ATTACHMENT	AUG	-	-	-	-	-	-	-
3	AFW			OWN	-	-	-	-	-	-	-
				PRE	-	-	-	-	-	-	-
D-A	I505030		C-1F	ISI	-	-	-	-	-	-	-
D1.20	AFU-11 (IA)		INTEGRAL ATTACHMENT	AUG	-	-	-	-	-	-	-
3	AFW			OWN	-	-	-	-	-	-	-
				PRE	-	-	-	-	-	-	-

Category, ItemNO, Class	Summary / CompID / System	Scope / Method / Procedure	Iso No. Comp. Desc. Code Case		Period 1 00	Period 1 02	Period 2 03	Period 2 05	Period 2 06	Period 3 08	Period 3 09
D-A	I505100		C-1F	ISI	-	-	-	-	-	-	-
D1.20	AFU-18 (IA)		INTEGRAL ATTACHMENT	AUG	-	-	-	-	-	-	-
3	AFW			OWN	-	-	-	-	-	-	-
				PRE	-	-	-	-	-	-	-
D-A	I505220		C-1C	ISI	-	-	-	-	-	-	-
D1.20	AFU-99 (IA)		INTEGRAL ATTACHMENT	AUG	-	-	-	-	-	-	-
3	AFW			OWN	-	-	-	-	-	-	-
				PRE	-	-	-	-	-	-	-
D-A	I505230		C-1C	ISI	-	-	-	-	-	-	-
D1.20	AFU-100 (IA)		INTEGRAL ATTACHMENT	AUG	-	-	-	-	-	-	-
3	AFW			OWN	-	-	-	-	-	-	-
				PRE	-	-	-	-	-	-	-
D-A	I505280	ISI/VT/VT-103	C-1E	ISI	c	-	-	-	-	-	-
D1.20	AFU-30 (IA)		INTEGRAL ATTACHMENT	AUG	-	-	-	-	-	-	-
3	AFW			OWN	-	-	-	-	-	-	-
				PRE	-	-	-	-	-	-	-
D-A	I505310		C-1E	ISI	-	-	-	-	-	-	-
D1.20	AFU-33 (IA)		INTEGRAL ATTACHMENT	AUG	-	-	-	-	-	-	-
3	AFW			OWN	-	-	-	-	-	-	-
				PRE	-	-	-	-	-	-	-
D-A	I505330		C-1D	ISI	-	-	-	-	-	-	-
D1.20	AFU-35 (IA)		INTEGRAL ATTACHMENT	AUG	-	-	-	-	-	-	-
3	AFW			OWN	-	-	-	-	-	-	-
				PRE	-	-	-	-	-	-	-
D-A	I505390		C-1D	ISI	-	-	-	-	-	-	-
D1.20	AFU-41 (IA)		INTEGRAL ATTACHMENT	AUG	-	-	-	-	-	-	-
3	AFW			OWN	-	-	-	-	-	-	-
				PRE	-	-	-	-	-	-	-
D-A	I505460		C-1A	ISI	-	-	-	-	-	-	-
D1.20	AFU-48 (IA)		INTEGRAL ATTACHMENT	AUG	-	-	-	-	-	-	-
3	AFW			OWN	-	-	-	-	-	-	-
				PRE	-	-	-	-	-	-	-
D-A	I505470		C-1A	ISI	-	-	-	-	-	-	-
D1.20	AFU-49 (IA)		INTEGRAL ATTACHMENT	AUG	-	-	-	-	-	-	-
3	AFW			OWN	-	-	-	-	-	-	-
				PRE	-	-	-	-	-	-	-
D-A	I505540		C-1A	ISI	-	-	-	-	-	-	-
D1.20	AFU-56 (IA)		INTEGRAL ATTACHMENT	AUG	-	-	-	-	-	-	-
3	AFW			OWN	-	-	-	-	-	-	-
				PRE	-	-	-	-	-	-	-

Category, ItemNO, Class	Summary / CompID / System	Scope / Method / Procedure	Iso No. Comp. Desc. Code Case		Period 1 00	Period 1 02	Period 2 03	Period 2 05	Period 2 06	Period 3 08	Period 3 09
D-A	I505550		C-1A	ISI	-	-	-	-	-	-	-
D1.20	AFU-105 (IA)		INTEGRAL ATTACHMENT	AUG	-	-	-	-	-	-	-
3	AFW			OWN	-	-	-	-	-	-	-
				PRE	-	-	-	-	-	-	-
D-A	I505580		C-1A	ISI	-	-	-	-	-	-	-
D1.20	AFU-108 (IA)		INTEGRAL ATTACHMENT	AUG	-	-	-	-	-	-	-
3	AFW			OWN	-	-	-	-	-	-	-
				PRE	-	-	-	-	-	-	-
D-A	I505620	ISI/VT/VT-103	C-1	ISI	-	-	-	-	-	s	-
D1.20	AFU-62 (IA)		INTEGRAL ATTACHMENT	AUG	-	-	-	-	-	-	-
3	AFW			OWN	-	-	-	-	-	-	-
				PRE	-	-	-	-	-	-	-
D-A	I505660		C-1	ISI	-	-	-	-	-	-	-
D1.20	AFU-66 (IA)		INTEGRAL ATTACHMENT	AUG	-	-	-	-	-	-	-
3	AFW			OWN	-	-	-	-	-	-	-
				PRE	-	-	-	-	-	-	-
D-A	I505720		C-1	ISI	-	-	-	-	-	-	-
D1.20	AFU-72 (IA)		INTEGRAL ATTACHMENT	AUG	-	-	-	-	-	-	-
3	AFW			OWN	-	-	-	-	-	-	-
				PRE	-	-	-	-	-	-	-
D-A	I505775		C-1B	ISI	-	-	-	-	-	-	-
D1.20	AFU-78 (IA)		INTEGRAL ATTACHMENT	AUG	-	-	-	-	-	-	-
3	AFW			OWN	-	-	-	-	-	-	-
				PRE	-	-	-	-	-	-	-
D-A	I505810		C-1B	ISI	-	-	-	-	-	-	-
D1.20	AFU-90 (IA)		INTEGRAL ATTACHMENT	AUG	-	-	-	-	-	-	-
3	AFW			OWN	-	-	-	-	-	-	-
				PRE	-	-	-	-	-	-	-
D-A	I505840		C-1B	ISI	-	-	-	-	-	-	-
D1.20	AFU-93 (IA)		INTEGRAL ATTACHMENT	AUG	-	-	-	-	-	-	-
3	AFW			OWN	-	-	-	-	-	-	-
				PRE	-	-	-	-	-	-	-
D-A	I505870		C-1B	ISI	-	-	-	-	-	-	-
D1.20	AFU-96 (IA)		INTEGRAL ATTACHMENT	AUG	-	-	-	-	-	-	-
3	AFW			OWN	-	-	-	-	-	-	-
				PRE	-	-	-	-	-	-	-
D-A	I505910	ISI/VT/VT-103	C-1	ISI	-	-	-	-	-	s	-
D1.20	AFU-82 (IA)		INTEGRAL ATTACHMENT	AUG	-	-	-	-	-	-	-
3	AFW			OWN	-	-	-	-	-	-	-
				PRE	-	-	-	-	-	-	-

Category, ItemNO, Class	Summary / CompID / System	Scope / Method / Procedure	Iso No. Comp. Desc. Code Case		Period 1 00	Period 1 02	Period 2 03	Period 2 05	Period 2 06	Period 3 08	Period 3 09
D-A	I505960		C-1A	ISI	-	-	-	-	-	-	-
D1.20	AFU-112 (IA)		INTEGRAL ATTACHMENT	AUG	-	-	-	-	-	-	-
3	AFW			OWN	-	-	-	-	-	-	-
				PRE	-	-	-	-	-	-	-
D-A	I507205		C-21	ISI	-	-	-	-	-	-	-
D1.20	AFU-231/256 (AFW-51) (IA)		INTEGRAL ATTACHMENT	AUG	-	-	-	-	-	-	-
3	SAFW			OWN	-	-	-	-	-	-	-
				PRE	-	-	-	-	-	-	-
D-A	I507210		C-21	ISI	-	-	-	-	-	-	-
D1.20	AFU-233/258 (AFW-52) (IA)		INTEGRAL ATTACHMENT	AUG	-	-	-	-	-	-	-
3	SAFW			OWN	-	-	-	-	-	-	-
				PRE	-	-	-	-	-	-	-
D-A	I507225		C-21	ISI	-	-	-	-	-	-	-
D1.20	AFU-260 (AFW-73) (IA)		INTEGRAL ATTACHMENT	AUG	-	-	-	-	-	-	-
3	SAFW			OWN	-	-	-	-	-	-	-
				PRE	-	-	-	-	-	-	-
D-A	I507370		C-21	ISI	-	-	-	-	-	-	-
D1.20	AFU-274 (AFW-87) (IA)		INTEGRAL ATTACHMENT	AUG	-	-	-	-	-	-	-
3	SAFW			OWN	-	-	-	-	-	-	-
				PRE	-	-	-	-	-	-	-
D-A	I507380		C-21	ISI	-	-	-	-	-	-	-
D1.20	AFU-165 (AFW-88) (IA)		INTEGRAL ATTACHMENT	AUG	-	-	-	-	-	-	-
3	SAFW			OWN	-	-	-	-	-	-	-
				PRE	-	-	-	-	-	-	-
D-A	I507450		C-22	ISI	-	-	-	-	-	-	-
D1.20	AFU-152 (AFW-94) (IA)		INTEGRAL ATTACHMENT	AUG	-	-	-	-	-	-	-
3	SAFW			OWN	-	-	-	-	-	-	-
				PRE	-	-	-	-	-	-	-
D-A	I507481	ISI/VT/VT-103	C-22	ISI	-	c	-	-	-	-	-
D1.20	AFU-157 (AFW-118) (IA)		INTEGRAL ATTACHMENT	AUG	-	-	-	-	-	-	-
3	SAFW			OWN	-	-	-	-	-	-	-
				PRE	-	-	-	-	-	-	-
D-A	I507525		C-23	ISI	-	-	-	-	-	-	-
D1.20	AFU-194 (AFW-100) (IA)		INTEGRAL ATTACHMENT	AUG	-	-	-	-	-	-	-
3	SAFW			OWN	-	-	-	-	-	-	-
				PRE	-	-	-	-	-	-	-
D-A	I507530		C-23	ISI	-	-	-	-	-	-	-
D1.20	AFU-193 (AFW-101) (IA)		INTEGRAL ATTACHMENT	AUG	-	-	-	-	-	-	-
3	SAFW			OWN	-	-	-	-	-	-	-
				PRE	-	-	-	-	-	-	-

Category, ItemNO, Class	Summary / CompID / System	Scope / Method / Procedure	Iso No. Comp. Desc. Code Case		Period 1 00	Period 1 02	Period 2 03	Period 2 05	Period 2 06	Period 3 08	Period 3 09
D-A	I508146		C-25	ISI	-	-	-	-	-	-	-
D1.20	AFU-231 (AFW-51) (IA)		INTEGRAL ATTACHMENT	AUG	-	-	-	-	-	-	-
3	SAFW			OWN	-	-	-	-	-	-	-
				PRE	-	-	-	-	-	-	-
D-A	I508149		C-25	ISI	-	-	-	-	-	-	-
D1.20	AFU-233 (AFW-52) (IA)		INTEGRAL ATTACHMENT	AUG	-	-	-	-	-	-	-
3	SAFW			OWN	-	-	-	-	-	-	-
				PRE	-	-	-	-	-	-	-
D-A	I508180	ISI/VT/VT-103	C-25	ISI	-	-	-	-	-	-	s
D1.20	AFU-238 (AFW-56) (IA)		INTEGRAL ATTACHMENT	AUG	-	-	-	-	-	-	-
3	SAFW			OWN	-	-	-	-	-	-	-
				PRE	-	-	-	-	-	-	-
D-A	I508240		C-25	ISI	-	-	-	-	-	-	-
D1.20	AFU-244 (AFW-62) (IA)		INTEGRAL ATTACHMENT	AUG	-	-	-	-	-	-	-
3	SAFW			OWN	-	-	-	-	-	-	-
				PRE	-	-	-	-	-	-	-
D-A	I508300		C-25	ISI	-	-	-	-	-	-	-
D1.20	AFU-250 (AFW-68) (IA)		INTEGRAL ATTACHMENT	AUG	-	-	-	-	-	-	-
3	SAFW			OWN	-	-	-	-	-	-	-
				PRE	-	-	-	-	-	-	-
D-A	I508335		C-25	ISI	-	-	-	-	-	-	-
D1.20	AFU-254 (IA)		INTEGRAL ATTACHMENT	AUG	-	-	-	-	-	-	-
3	SAFW			OWN	-	-	-	-	-	-	-
				PRE	-	-	-	-	-	-	-
D-A	I508340		C-25	ISI	-	-	-	-	-	-	-
D1.20	AFW-116 (IA)		INTEGRAL ATTACHMENT	AUG	-	-	-	-	-	-	-
3	SAFW			OWN	-	-	-	-	-	-	-
				PRE	-	-	-	-	-	-	-
D-A	I508440	ISI/VT/VT-103	C-22	ISI	-	-	-	-	-	s	-
D1.20	AFU-188 (AFW-107) (IA)		INTEGRAL ATTACHMENT	AUG	-	-	-	-	-	-	-
3	SAFW			OWN	-	-	-	-	-	-	-
				PRE	-	-	-	-	-	-	-
D-A	I508475		C-22	ISI	-	-	-	-	-	-	-
D1.20	AFU-171 (AFW-117) (IA)		INTEGRAL ATTACHMENT	AUG	-	-	-	-	-	-	-
3	SAFW			OWN	-	-	-	-	-	-	-
				PRE	-	-	-	-	-	-	-
D-A	I508511		C-16	ISI	-	-	-	-	-	-	-
D1.20	AFU-2 (IA)		INTEGRAL ATTACHMENT	AUG	-	-	-	-	-	-	-
3	AFW			OWN	-	-	-	-	-	-	-
				PRE	-	-	-	-	-	-	-

Category, ItemNO, Class	Summary / CompID / System	Scope / Method / Procedure	Iso No. Comp. Desc. Code Case		Period 1 00	Period 1 02	Period 2 03	Period 2 05	Period 2 06	Period 3 08	Period 3 09
D-A	I508750		C-26	ISI	-	-	-	-	-	-	-
D1.20	SWU-546 (SW-105) (IA)		INTEGRAL ATTACHMENT	AUG	-	-	-	-	-	-	-
3	SAFW			OWN	-	-	-	-	-	-	-
				PRE	-	-	-	-	-	-	-
D-A	I508780		C-26	ISI	-	-	-	-	-	-	-
D1.20	SWU-552 (SW-111) (IA)		INTEGRAL ATTACHMENT	AUG	-	-	-	-	-	-	-
3	SAFW			OWN	-	-	-	-	-	-	-
				PRE	-	-	-	-	-	-	-
D-A	I508790		C-26	ISI	-	-	-	-	-	-	-
D1.20	SWU-585 (SW-117) (IA)		INTEGRAL ATTACHMENT	AUG	-	-	-	-	-	-	-
3	SAFW			OWN	-	-	-	-	-	-	-
				PRE	-	-	-	-	-	-	-
D-A	I508815		C-28	ISI	-	-	-	-	-	-	-
D1.20	SWU-590 (SW-122) (IA)		INTEGRAL ATTACHMENT	AUG	-	-	-	-	-	-	-
3	SAFW			OWN	-	-	-	-	-	-	-
				PRE	-	-	-	-	-	-	-
D-A	I508845		C-28	ISI	-	-	-	-	-	-	-
D1.20	SWU-596 (SW-128) (IA)		INTEGRAL ATTACHMENT	AUG	-	-	-	-	-	-	-
3	SAFW			OWN	-	-	-	-	-	-	-
				PRE	-	-	-	-	-	-	-
D-A	I508860		C-27	ISI	-	-	-	-	-	-	-
D1.20	SWU-500 (SW-88) (IA)		INTEGRAL ATTACHMENT	AUG	-	-	-	-	-	-	-
3	SAFW			OWN	-	-	-	-	-	-	-
				PRE	-	-	-	-	-	-	-
D-A	I508870	ISI/VT/VT-103	C-27	ISI	-	c	-	-	-	-	-
D1.20	SWU-502 (SW-90) (IA)		INTEGRAL ATTACHMENT	AUG	-	-	-	-	-	-	-
3	SAFW			OWN	-	-	-	-	-	-	-
				PRE	-	-	-	-	-	-	-
D-A	I508900		C-27	ISI	-	-	-	-	-	-	-
D1.20	SWU-508 (SW-116) (IA)		INTEGRAL ATTACHMENT	AUG	-	-	-	-	-	-	-
3	SAFW			OWN	-	-	-	-	-	-	-
				PRE	-	-	-	-	-	-	-
D-A	I508930		C-28	ISI	-	-	-	-	-	-	-
D1.20	SWU-514 (SW-142) (IA)		INTEGRAL ATTACHMENT	AUG	-	-	-	-	-	-	-
3	SAFW			OWN	-	-	-	-	-	-	-
				PRE	-	-	-	-	-	-	-
D-A	I508955		C-28	ISI	-	-	-	-	-	-	-
D1.20	SWU-521 (SW-139) (IA)		INTEGRAL ATTACHMENT	AUG	-	-	-	-	-	-	-
3	SAFW			OWN	-	-	-	-	-	-	-
				PRE	-	-	-	-	-	-	-

Category, ItemNO, Class	Summary / CompID / System	Scope / Method / Procedure	Iso No. Comp. Desc. Code Case		Period 1 00	Period 1 02	Period 2 03	Period 2 05	Period 2 06	Period 3 08	Period 3 09
D-A	I508975		C-29	ISI	-	-	-	-	-	-	-
D1.20	SWU-599 (SW-131) (IA)		INTEGRAL ATTACHMENT	AUG	-	-	-	-	-	-	-
3	SAFW			OWN	-	-	-	-	-	-	-
				PRE	-	-	-	-	-	-	-
D-A	I508985		C-29	ISI	-	-	-	-	-	-	-
D1.20	SWU-601 (SW-133) (IA)		INTEGRAL ATTACHMENT	AUG	-	-	-	-	-	-	-
3	SAFW			OWN	-	-	-	-	-	-	-
				PRE	-	-	-	-	-	-	-
D-A	I508990		C-29	ISI	-	-	-	-	-	-	-
D1.20	SWU-517 (SW-134) (IA)		INTEGRAL ATTACHMENT	AUG	-	-	-	-	-	-	-
3	SAFW			OWN	-	-	-	-	-	-	-
				PRE	-	-	-	-	-	-	-
D-A	I509000	ISI/VT/VT-103	C-32	ISI	-	-	-	-	-	s	-
D1.20	MSU-62 (IA)		INTEGRAL ATTACHMENT	AUG	-	-	-	-	-	-	-
3	MS			OWN	-	-	-	-	-	-	-
				PRE	-	-	-	-	-	-	-
D-A	I509010	PSI/VT/VT-103	C-32	ISI	-	-	-	-	-	-	-
D1.20	MSU-63 (IA)		INTEGRAL ATTACHMENT	AUG	-	-	-	-	-	-	-
3	MS			OWN	-	-	-	-	-	-	-
				PRE	c	-	-	-	-	-	-
D-A	I509020		C-32	ISI	-	-	-	-	-	-	-
D1.20	MSU-64 (IA)		INTEGRAL ATTACHMENT	AUG	-	-	-	-	-	-	-
3	MS			OWN	-	-	-	-	-	-	-
				PRE	-	-	-	-	-	-	-
D-A	I509030		C-32	ISI	-	-	-	-	-	-	-
D1.20	MSU-65 (IA)		INTEGRAL ATTACHMENT	AUG	-	-	-	-	-	-	-
3	MS			OWN	-	-	-	-	-	-	-
				PRE	-	-	-	-	-	-	-
D-A	I509040		C-32	ISI	-	-	-	-	-	-	-
D1.20	MSU-66 (IA)		INTEGRAL ATTACHMENT	AUG	-	-	-	-	-	-	-
3	MS			OWN	-	-	-	-	-	-	-
				PRE	-	-	-	-	-	-	-
D-A	I509050		C-32	ISI	-	-	-	-	-	-	-
D1.20	MSU-67 (IA)		INTEGRAL ATTACHMENT	AUG	-	-	-	-	-	-	-
3	MS			OWN	-	-	-	-	-	-	-
				PRE	-	-	-	-	-	-	-
D-A	I509080		C-32	ISI	-	-	-	-	-	-	-
D1.20	MSU-70 (IA)		INTEGRAL ATTACHMENT	AUG	-	-	-	-	-	-	-
3	MS			OWN	-	-	-	-	-	-	-
				PRE	-	-	-	-	-	-	-

Category, ItemNO, Class	Summary / CompID / System	Scope / Method / Procedure	Iso No. Comp. Desc. Code Case		Period 1 00	Period 1 02	Period 2 03	Period 2 05	Period 2 06	Period 3 08	Period 3 09
D-A	I509090		C-32	ISI	-	-	-	-	-	-	-
D1.20	MSU-71 (IA)		INTEGRAL ATTACHMENT	AUG	-	-	-	-	-	-	-
3	MS			OWN	-	-	-	-	-	-	-
				PRE	-	-	-	-	-	-	-
D-A	I509110		C-32	ISI	-	-	-	-	-	-	-
D1.20	MSU-73 (IA)		INTEGRAL ATTACHMENT	AUG	-	-	-	-	-	-	-
3	MS			OWN	-	-	-	-	-	-	-
				PRE	-	-	-	-	-	-	-
D-A	I509150		C-32	ISI	-	-	-	-	-	-	-
D1.20	MSU-77 (IA)		INTEGRAL ATTACHMENT	AUG	-	-	-	-	-	-	-
3	MS			OWN	-	-	-	-	-	-	-
				PRE	-	-	-	-	-	-	-
D-A	I509160		C-32	ISI	-	-	-	-	-	-	-
D1.20	MSU-78 (IA)		INTEGRAL ATTACHMENT	AUG	-	-	-	-	-	-	-
3	MS			OWN	-	-	-	-	-	-	-
				PRE	-	-	-	-	-	-	-
D-A	I509210		C-32	ISI	-	-	-	-	-	-	-
D1.20	MSU-83 (IA)		INTEGRAL ATTACHMENT	AUG	-	-	-	-	-	-	-
3	MS			OWN	-	-	-	-	-	-	-
				PRE	-	-	-	-	-	-	-
D-A	I509220	ISI/VT/VT-103	C-32	ISI	-	c	-	-	-	-	-
D1.20	MSU-84 (IA)		INTEGRAL ATTACHMENT	AUG	-	-	-	-	-	-	-
3	MS			OWN	-	-	-	-	-	-	-
				PRE	-	-	-	-	-	-	-
D-A	I510035		C-1G	ISI	-	-	-	-	-	-	-
D1.20	AFU-60 (IA)		INTEGRAL ATTACHMENT	AUG	-	-	-	-	-	-	-
3	AFW			OWN	-	-	-	-	-	-	-
				PRE	-	-	-	-	-	-	-
D-A	I510045		C-1G	ISI	-	-	-	-	-	-	-
D1.20	AFU-133 (IA)		INTEGRAL ATTACHMENT	AUG	-	-	-	-	-	-	-
3	AFW			OWN	-	-	-	-	-	-	-
				PRE	-	-	-	-	-	-	-
D-A	I510055		C-1G	ISI	-	-	-	-	-	-	-
D1.20	AFU-140 (IA)		INTEGRAL ATTACHMENT	AUG	-	-	-	-	-	-	-
3	AFW			OWN	-	-	-	-	-	-	-
				PRE	-	-	-	-	-	-	-
D-A	I510065		C-1H	ISI	-	-	-	-	-	-	-
D1.20	AFU-128 (IA)		INTEGRAL ATTACHMENT	AUG	-	-	-	-	-	-	-
3	AFW			OWN	-	-	-	-	-	-	-
				PRE	-	-	-	-	-	-	-

Category, ItemNO, Class	Summary / CompID / System	Scope / Method / Procedure	Iso No. Comp. Desc. Code Case		Period 1 00	Period 1 02	Period 2 03	Period 2 05	Period 2 06	Period 3 08	Period 3 09
D-A	I510095		C-1H	ISI	-	-	-	-	-	-	-
D1.20	AFU-58 (IA)		INTEGRAL ATTACHMENT	AUG	-	-	-	-	-	-	-
3	AFW			OWN	-	-	-	-	-	-	-
				PRE	-	-	-	-	-	-	-
D-A	I510105		C-1H	ISI	-	-	-	-	-	-	-
D1.20	AFU-127 (IA)		INTEGRAL ATTACHMENT	AUG	-	-	-	-	-	-	-
3	AFW			OWN	-	-	-	-	-	-	-
				PRE	-	-	-	-	-	-	-
D-B	I411300	ISI/VT/VT-109	L-1	ISI	c	-	B	-	-	b	-
D2.XX	MS TO TDAFWP	ISI/VT/VT-109	TDAFWP	AUG	-	-	-	-	-	-	-
3	MS		N-498-1,N-498-1,N-498-1	OWN	-	-	-	-	-	-	-
				PRE	-	-	-	-	-	-	-
D-B	I411700	ISI/VT/VT-109	L-1	ISI	-	c	-	b	-	b	-
D2.XX	AUX FW "A" PUMP	ISI/VT/VT-109	AFW SYSTEM LEAKAGE EXAMINATION	AUG	-	-	-	-	-	-	-
3	AFW		N-498-1,N-498-1,N-498-1	OWN	-	-	-	-	-	-	-
				PRE	-	-	-	-	-	-	-
D-B	I411800	ISI/VT/VT-109	L-1	ISI	c	-	-	b	-	b	-
D2.XX	AUX FW "B" PUMP	ISI/VT/VT-109	AFW SYSTEM LEAKAGE EXAMINATION	AUG	-	-	-	-	-	-	-
3	AFW	ISI/VT/VT-109	N-498-1,N-498-1,N-498-1	OWN	-	-	-	-	-	-	-
				PRE	-	-	-	-	-	-	-
D-B	I411900	ISI/VT/VT-109	L-1	ISI	c	-	-	b	-	b	-
D2.XX	AUX FW TURBINE DRIVEN PUMP	ISI/VT/VT-109	AFW SYSTEM LEAKAGE EXAMINATION	AUG	-	-	-	-	-	-	-
3	AFW	ISI/VT/VT-109	N-498-1,N-498-1,N-498-1	OWN	-	-	-	-	-	-	-
				PRE	-	-	-	-	-	-	-
D-B	I412000	ISI/VT/VT-109	L-1	ISI	c	-	-	b	-	b	-
D2.XX	STANDBY AUXILIARY FEEDWATER	ISI/VT/VT-109	PUMP "C"	AUG	-	-	-	-	-	-	-
3	AFW	ISI/VT/VT-109	N-498-1,N-498-1,N-498-1	OWN	-	-	-	-	-	-	-
				PRE	-	-	-	-	-	-	-
D-B	I412100	ISI/VT/VT-109	L-1	ISI	c	-	B	-	-	b	-
D2.XX	STANDBY AUXILIARY FEEDWATER	ISI/VT/VT-109	PUMP "D"	AUG	-	-	-	-	-	-	-
3	AFW	ISI/VT/VT-109	N-498-1,N-498-1,N-498-1	OWN	-	-	-	-	-	-	-
				PRE	-	-	-	-	-	-	-
D-B	I413600	ISI/VT/VT-109	L-1	ISI	c	-	B	-	-	b	-
D2.XX	AUX COOLING INSIDE	ISI/VT/VT-109	CONTAINMENT	AUG	-	-	-	-	-	-	-
3	AC	ISI/VT/VT-109	N-498-1,N-498-1,N-498-1	OWN	-	-	-	-	-	-	-
				PRE	-	-	-	-	-	-	-
D-B	I413700	ISI/VT/VT-109	L-1	ISI	-	c	-	b	-	b	-
D2.XX	AUX COOLING OUTSIDE	ISI/VT/VT-109	CONTAINMENT	AUG	-	-	-	-	-	-	-
3	AC	ISI/VT/VT-109	N-498-1,N-498-1,N-498-1	OWN	-	-	-	-	-	-	-
				PRE	-	-	-	-	-	-	-

Category, ItemNO, Class	Summary / CompID / System	Scope / Method / Procedure	Iso No. Comp. Desc. Code Case		Period 1 00	Period 1 02	Period 2 03	Period 2 05	Period 2 06	Period 3 08	Period 3 09
D-B	I413900	ISI/VT/VT-109	L-1	ISI	c	-	B	-	-	b	-
D2.XX	SERVICE WATER	ISI/VT/VT-109	INSIDE CONTAINMENT	AUG	-	-	-	-	-	-	-
3	SW	ISI/VT/VT-109	N-498-1,N-498-1,N-498-1	OWN	-	-	-	-	-	-	-
				PRE	-	-	-	-	-	-	-
D-B	I414000	ISI/VT/VT-109	L-1	ISI	-	c	-	b	-	b	-
D2.XX	SERVICE WATER	ISI/VT/VT-109	OUTSIDE CONTAINMENT	AUG	-	-	-	-	-	-	-
3	SW	ISI/VT/VT-109	N-498-1,N-498-1,N-498-1	OWN	-	-	-	-	-	-	-
		ISI/VT/VT-109		PRE	-	-	-	-	-	-	-
D-B	I414100	ISI/VT/VT-109	L-1	ISI	c	-	-	b	-	b	-
D2.XX	SERVICE WATER TO	ISI/VT/VT-109	AUX FW PUMP "A"	AUG	-	-	-	-	-	-	-
3	SW	ISI/VT/VT-109	N-498-1,N-498-1,N-498-1	OWN	-	-	-	-	-	-	-
		ISI/VT/VT-109		PRE	-	-	-	-	-	-	-
D-B	I414200	ISI/VT/VT-109	L-1	ISI	-	c	-	b	-	b	-
D2.XX	SERVICE WATER TO	ISI/VT/VT-109	AUX FW PUMP "B"	AUG	-	-	-	-	-	-	-
3	SW		N-498-1,N-498-1,N-498-1	OWN	-	-	-	-	-	-	-
				PRE	-	-	-	-	-	-	-
D-B	I414300	ISI/VT/VT-109	L-1	ISI	c	-	B	-	-	b	-
D2.XX	SERVICE WATER TO	ISI/VT/VT-109	TDAFWP	AUG	-	-	-	-	-	-	-
3	SW	ISI/VT/VT-109	N-498-1,N-498-1,N-498-1	OWN	-	-	-	-	-	-	-
		ISI/VT/VT-109		PRE	-	-	-	-	-	-	-
D-B	I415100	OWN/VT/VT-109	L-1	ISI	-	-	-	-	-	-	-
D2.XX	Diesel Gen. A	OWN/VT/VT-109	Diesel Gen. "A"	AUG	-	-	-	-	-	-	-
3	DG			OWN	-	-	-	s	-	b	-
				PRE	-	-	-	-	-	-	-
D-B	I415200	OWN/VT/VT-109	L-1	ISI	-	-	-	-	-	-	-
D2.XX	Diesel Gen. B	OWN/VT/VT-109	Diesel Gen. "B"	AUG	-	-	-	-	-	-	-
3	DG			OWN	-	-	-	s	-	b	-
				PRE	-	-	-	-	-	-	-
D-B	I415500	ISI/VT/VT-109	L-1	ISI	c	-	B	-	-	b	-
D2.XX	SPENT FUEL POOL COOLING-A	ISI/VT/VT-109		AUG	-	-	-	-	-	-	-
3	SF	ISI/VT/VT-109	N-498-1,N-498-1,N-498-1	OWN	-	-	-	-	-	-	-
				PRE	-	-	-	-	-	-	-
D-B	I415550	ISI/VT/VT-109	L-1	ISI	c	-	-	b	-	b	-
D2.XX	SPENT FUEL POOL COOLING-B	ISI/VT/VT-109	SFP COOLING SYSTEM LEAKAGE EXAMINATION	AUG	-	-	-	-	-	-	-
3	SF	ISI/VT/VT-109	N-498-1,N-498-1,N-498-1	OWN	-	-	-	-	-	-	-
				PRE	-	-	-	-	-	-	-
D-B	I411310		L-1	ISI	-	-	-	-	-	-	-
IN	MS TO TDAFWP		SEE SUM # 411300	AUG	-	-	-	-	-	-	-
3	MS			OWN	-	-	-	-	-	-	-
				PRE	-	-	-	-	-	-	-

Category, ItemNO, Class	Summary / CompID / System	Scope / Method / Procedure	Iso No. Comp. Desc. Code Case		Period 1 00	Period 1 02	Period 2 03	Period 2 05	Period 2 06	Period 3 08	Period 3 09
D-B	I414910		L-	ISI	-	-	-	-	-	-	-
IN	BA TRANSFER PUMPS/PIPING		SEE SUM # 414900	AUG	-	-	-	-	-	-	-
3	CVCS			OWN	-	-	-	-	-	-	-
				PRE	-	-	-	-	-	-	-
F-A	I015600	ISI/VT/VT-106	A-10	ISI	-	c	-	-	-	-	-
F1.10A	RCU-24	OWN/VT/VT-106	RIGID RESTRAINT	AUG	-	-	-	-	-	-	-
1	PZR			OWN	-	-	c	-	-	-	-
				PRE	-	-	-	-	-	-	-
F-A	I015625	OWN/VT/VT-106	A-10	ISI	-	-	-	-	-	-	-
F1.10A	RCU-23		GUIDE	AUG	-	-	-	-	-	-	-
1	PZR			OWN	-	-	c	-	-	-	-
				PRE	-	-	-	-	-	-	-
F-A	I015675	ISI/VT/VT-106	A-10	ISI	c	-	-	-	-	-	-
F1.10A	RCU-21	OWN/VT/VT-106	GUIDE	AUG	-	-	-	-	-	-	-
1	PZR			OWN	-	-	c	-	-	-	-
				PRE	-	-	-	-	-	-	-
F-A	I016600	OWN/VT/VT-106	A-10	ISI	-	-	-	-	-	-	-
F1.10A	RCU-20		RIGID RESTRAINT	AUG	-	-	-	-	-	-	-
1	PZR			OWN	-	-	c	-	-	-	-
				PRE	-	-	-	-	-	-	-
F-A	I016850	OWN/VT/VT-106	A-10	ISI	-	-	-	-	-	-	-
F1.10A	RCU-18		RIGID RESTRAINT	AUG	-	-	-	-	-	-	-
1	PZR			OWN	-	-	c	-	-	-	-
				PRE	-	-	-	-	-	-	-
F-A	I016950	OWN/VT/VT-106	A-10	ISI	-	-	-	-	-	-	-
F1.10A	RCU-19		RIGID RESTRAINT	AUG	-	-	-	-	-	-	-
1	PZR			OWN	-	-	c	-	-	-	-
				PRE	-	-	-	-	-	-	-
F-A	I019900	OWN/VT/VT-106	A-10	ISI	-	-	-	-	-	-	-
F1.10A	RCU-12		RIGID RESTRAINT	AUG	-	-	-	-	-	-	-
1	PZR			OWN	-	-	c	-	-	-	-
				PRE	-	-	-	-	-	-	-
F-A	I019925	OWN/VT/VT-106	A-10	ISI	-	-	-	-	-	-	-
F1.10A	RCU-13		RIGID RESTRAINT	AUG	-	-	-	-	-	-	-
1	PZR			OWN	-	-	c	-	-	-	-
				PRE	-	-	-	-	-	-	-
F-A	I020400	ISI/VT/VT-106	A-10	ISI	-	-	c	-	-	-	-
F1.10A	RCU-10		RIGID RESTRAINT	AUG	-	-	-	-	-	-	-
1	PZR			OWN	-	-	-	-	-	-	-
				PRE	-	-	-	-	-	-	-

Category, ItemNO, Class	Summary / CompID / System	Scope / Method / Procedure	Iso No. Comp. Desc. Code Case		Period 1 00	Period 1 02	Period 2 03	Period 2 05	Period 2 06	Period 3 08	Period 3 09
F-A	I022700	ISI/VT/VT-106	A-11	ISI	-	-	-	s	-	-	-
F1.10A	CVU-67		RIGID RESTRAINT	AUG	-	-	-	-	-	-	-
1	CVCS-CHRG			OWN	-	-	-	-	-	-	-
				PRE	-	-	-	-	-	-	-
F-A	I023100		A-11	ISI	-	-	-	-	-	-	-
F1.10A	CVU-69		RIGID HANGER	AUG	-	-	-	-	-	-	-
1	CVCS-CHRG			OWN	-	-	-	-	-	-	-
				PRE	-	-	-	-	-	-	-
F-A	I023450		A-11	ISI	-	-	-	-	-	-	-
F1.10A	CVU-71		RIGID RESTRAINT (IA)	AUG	-	-	-	-	-	-	-
1	CVCS-CHRG			OWN	-	-	-	-	-	-	-
				PRE	-	-	-	-	-	-	-
F-A	I024500		A-11	ISI	-	-	-	-	-	-	-
F1.10A	CVU-74		GUIDE	AUG	-	-	-	-	-	-	-
1	CVCS-CHRG			OWN	-	-	-	-	-	-	-
				PRE	-	-	-	-	-	-	-
F-A	I032500	ISI/VT/VT-106	A-15	ISI	-	-	-	-	-	s	-
F1.10A	RHU-32		RIGID RESTRAINT	AUG	-	-	-	-	-	-	-
1	RHR			OWN	-	-	-	-	-	-	-
				PRE	-	-	-	-	-	-	-
F-A	I032825		A-15	ISI	-	-	-	-	-	-	-
F1.10A	RHU-31		RIGID RESTRAINT	AUG	-	-	-	-	-	-	-
1	RHR			OWN	-	-	-	-	-	-	-
				PRE	-	-	-	-	-	-	-
F-A	I033660		A-16	ISI	-	-	-	-	-	-	-
F1.10A	SIU-48		GUIDE	AUG	-	-	-	-	-	-	-
1	HPSI			OWN	-	-	-	-	-	-	-
				PRE	-	-	-	-	-	-	-
F-A	I033670	ISI/VT/VT-106	A-16	ISI	-	-	-	-	-	s	-
F1.10A	SIU-49		GUIDE	AUG	-	-	-	-	-	-	-
1	HPSI			OWN	-	-	-	-	-	-	-
				PRE	-	-	-	-	-	-	-
F-A	I034800		A-17	ISI	-	-	-	-	-	-	-
F1.10A	SIU-4		RIGID RESTRAINT	AUG	-	-	-	-	-	-	-
1	HPSI			OWN	-	-	-	-	-	-	-
				PRE	-	-	-	-	-	-	-
F-A	I036500		A-18	ISI	-	-	-	-	-	-	-
F1.10A	RHU-22		RIGID HANGER (IA)	AUG	-	-	-	-	-	-	-
1	RC			OWN	-	-	-	-	-	-	-
				PRE	-	-	-	-	-	-	-

Category, ItemNO, Class	Summary / CompID / System	Scope / Method / Procedure	Iso No. Comp. Desc. Code Case		Period 1 00	Period 1 02	Period 2 03	Period 2 05	Period 2 06	Period 3 08	Period 3 09
F-A	I037800	ISI/VT/VT-106	A-14	ISI	-	-	-	-	-	s	-
F1.10A	RHU-10		RIGID HANGER (IA)	AUG	-	-	-	-	-	-	-
1	RC			OWN	-	-	-	-	-	-	-
				PRE	-	-	-	-	-	-	-
F-A	I041300		A-21	ISI	-	-	-	-	-	-	-
F1.10A	SIU-29		RIGID HANGER	AUG	-	-	-	-	-	-	-
1	HPSI			OWN	-	-	-	-	-	-	-
				PRE	-	-	-	-	-	-	-
F-A	I041725	ISI/VT/VT-106	A-21	ISI	-	-	-	-	s	-	-
F1.10A	SIU-28		RIGID HANGER	AUG	-	-	-	-	-	-	-
1	HPSI			OWN	-	-	-	-	-	-	-
				PRE	-	-	-	-	-	-	-
F-A	I044800	ISI/VT/VT-106	A-23	ISI	-	-	-	-	-	s	-
F1.10A	CVU-35		RIGID RESTRAINT	AUG	-	-	-	-	-	-	-
1	CVCS-LTDN			OWN	-	-	-	-	-	-	-
				PRE	-	-	-	-	-	-	-
F-A	I045450		A-23	ISI	-	-	-	-	-	-	-
F1.10A	CVU-32		RIGID HANGER	AUG	-	-	-	-	-	-	-
1	CVCS-LTDN			OWN	-	-	-	-	-	-	-
				PRE	-	-	-	-	-	-	-
F-A	I047100		A-23	ISI	-	-	-	-	-	-	-
F1.10A	CVU-28		RIGID RESTRAINT	AUG	-	-	-	-	-	-	-
1	CVCS-LTDN			OWN	-	-	-	-	-	-	-
				PRE	-	-	-	-	-	-	-
F-A	I049125		A-32A	ISI	-	-	-	-	-	-	-
F1.10A	CVU-93		RIGID RESTRAINT	AUG	-	-	-	-	-	-	-
1	CVCS-CHRG			OWN	-	-	-	-	-	-	-
				PRE	-	-	-	-	-	-	-
F-A	I049150	ISI/VT/VT-106	A-32A	ISI	c	-	-	-	-	-	-
F1.10A	CVU-94		RIGID RESTRAINT	AUG	-	-	-	-	-	-	-
1	CVCS-CHRG			OWN	-	-	-	-	-	-	-
				PRE	-	-	-	-	-	-	-
F-A	I049160		A-32A	ISI	-	-	-	-	-	-	-
F1.10A	CVU-96		RIGID RESTRAINT	AUG	-	-	-	-	-	-	-
1	CVCS-CHRG			OWN	-	-	-	-	-	-	-
				PRE	-	-	-	-	-	-	-
F-A	I049175		A-32A	ISI	-	-	-	-	-	-	-
F1.10A	CVU-97		RIGID RESTRAINT	AUG	-	-	-	-	-	-	-
1	CVCS-CHRG			OWN	-	-	-	-	-	-	-
				PRE	-	-	-	-	-	-	-

Category, ItemNO, Class	Summary / CompID / System	Scope / Method / Procedure	Iso No. Comp. Desc. Code Case		Period 1 00	Period 1 02	Period 2 03	Period 2 05	Period 2 06	Period 3 08	Period 3 09
F-A	I049205		A-32	ISI	-	-	-	-	-	-	-
F1.10A	CVU-98		RIGID HANGER	AUG	-	-	-	-	-	-	-
1	CVCS-CHRG			OWN	-	-	-	-	-	-	-
				PRE	-	-	-	-	-	-	-
F-A	I049325		A-32	ISI	-	-	-	-	-	-	-
F1.10A	CVU-102		GUIDE	AUG	-	-	-	-	-	-	-
1	CVCS-CHRG			OWN	-	-	-	-	-	-	-
				PRE	-	-	-	-	-	-	-
F-A	I049550	ISI/VT/VT-106	A-31A	ISI	c	-	-	-	-	-	-
F1.10A	CVU-171		RIGID RESTRAINT	AUG	-	-	-	-	-	-	-
1	CVCS-CHRG			OWN	-	-	-	-	-	-	-
				PRE	-	-	-	-	-	-	-
F-A	I049690		A-31	ISI	-	-	-	-	-	-	-
F1.10A	CVU-178		U-BOLT	AUG	-	-	-	-	-	-	-
1	CVCS-CHRG			OWN	-	-	-	-	-	-	-
				PRE	-	-	-	-	-	-	-
F-A	I049700	ISI/VT/VT-106	A-31	ISI	-	c	-	-	-	-	-
F1.10A	CVU-180		RIGID RESTRAINT	AUG	-	-	-	-	-	-	-
1	CVCS-CHRG			OWN	-	-	-	-	-	-	-
				PRE	-	-	-	-	-	-	-
F-A	I015655	ISI/VT/VT-106	A-10	ISI	-	c	-	-	-	-	-
F1.10B	RCU-22	OWN/VT/VT-106	RIGID RESTRAINT (IA)	AUG	-	-	-	-	-	-	-
1	PZR			OWN	-	-	c	-	-	-	-
				PRE	-	-	-	-	-	-	-
F-A	I017900	ISI/VT/VT-106	A-9	ISI	c	-	-	-	-	-	-
F1.10B	RCU-14	OWN/VT/VT-106	GUIDE	AUG	-	-	-	-	-	-	-
1	PZR			OWN	-	-	c	-	-	-	-
				PRE	-	-	-	-	-	-	-
F-A	I019050	OWN/VT/VT-106	A-9	ISI	-	-	-	-	-	-	-
F1.10B	RCU-3		RIGID RESTRAINT	AUG	-	-	-	-	-	-	-
1	PZR			OWN	-	-	c	-	-	-	-
				PRE	-	-	-	-	-	-	-
F-A	I020550	OWN/VT/VT-106	A-10	ISI	-	-	-	-	-	-	-
F1.10B	RCU-9		RIGID RESTRAINT	AUG	-	-	-	-	-	-	-
1	PZR			OWN	-	-	c	-	-	-	-
				PRE	-	-	-	-	-	-	-
F-A	I021700	OWN/VT/VT-106	A-9	ISI	-	-	-	-	-	-	-
F1.10B	RCU-5		GUIDE	AUG	-	-	-	-	-	-	-
1	PZR			OWN	-	-	c	-	-	-	-
				PRE	-	-	-	-	-	-	-

Category, ItemNO, Class	Summary / CompID / System	Scope / Method / Procedure	Iso No. Comp. Desc. Code Case		Period 1 00	Period 1 02	Period 2 03	Period 2 05	Period 2 06	Period 3 08	Period 3 09
F-A	I022800	ISI/VT/VT-106	A-11	ISI	-	-	-	s	-	-	-
F1.10B	CVU-68		RIGID RESTRAINT	AUG	-	-	-	-	-	-	-
1	CVCS-CHRG			OWN	-	-	-	-	-	-	-
				PRE	-	-	-	-	-	-	-
F-A	I023300	ISI/VT/VT-106	A-11	ISI	-	-	-	s	-	-	-
F1.10B	CVU-70		RIGID RESTRAINT	AUG	-	-	-	-	-	-	-
1	CVCS-CHRG			OWN	-	-	-	-	-	-	-
				PRE	-	-	-	-	-	-	-
F-A	I023900		A-11	ISI	-	-	-	-	-	-	-
F1.10B	CVU-72		RIGID RESTRAINT	AUG	-	-	-	-	-	-	-
1	CVCS-CHRG			OWN	-	-	-	-	-	-	-
				PRE	-	-	-	-	-	-	-
F-A	I024750	ISI/VT/VT-106	A-11	ISI	-	c	-	-	-	-	-
F1.10B	CVU-76		RIGID RESTRAINT (IA)	AUG	-	-	-	-	-	-	-
1	CVCS-CHRG			OWN	-	-	-	-	-	-	-
				PRE	-	-	-	-	-	-	-
F-A	I024800		A-11	ISI	-	-	-	-	-	-	-
F1.10B	CVU-77		GUIDE	AUG	-	-	-	-	-	-	-
1	CVCS-CHRG			OWN	-	-	-	-	-	-	-
				PRE	-	-	-	-	-	-	-
F-A	I029010	ISI/VT/VT-106	A-14	ISI	-	-	c	-	-	-	-
F1.10B	SIU-53		ANCHOR (IA)	AUG	-	-	-	-	-	-	-
1	RHR			OWN	-	-	-	-	-	-	-
				PRE	-	-	-	-	-	-	-
F-A	I040000		A-20	ISI	-	-	-	-	-	-	-
F1.10B	SIU-25		U-BOLT	AUG	-	-	-	-	-	-	-
1	HPSI			OWN	-	-	-	-	-	-	-
				PRE	-	-	-	-	-	-	-
F-A	I040025	ISI/VT/VT-106	A-20	ISI	-	-	c	-	-	-	-
F1.10B	SIU-27		U-BOLT	AUG	-	-	-	-	-	-	-
1	HPSI			OWN	-	-	-	-	-	-	-
				PRE	-	-	-	-	-	-	-
F-A	I043500	ISI/VT/VT-106	A-23A	ISI	-	-	-	-	-	s	-
F1.10B	CVU-37		U-BOLT	AUG	-	-	-	-	-	-	-
1	RC			OWN	-	-	-	-	-	-	-
				PRE	-	-	-	-	-	-	-
F-A	I043725		A-23A	ISI	-	-	-	-	-	-	-
F1.10B	CVU-36		U-BOLT	AUG	-	-	-	-	-	-	-
1	RC			OWN	-	-	-	-	-	-	-
				PRE	-	-	-	-	-	-	-

Category, ItemNO, Class	Summary / CompID / System	Scope / Method / Procedure	Iso No. Comp. Desc. Code Case		Period 1 00	Period 1 02	Period 2 03	Period 2 05	Period 2 06	Period 3 08	Period 3 09
F-A	I045425	ISI/VT/VT-106	A-23	ISI	-	-	-	s	-	-	-
F1.10B	CVU-33		GUIDE	AUG	-	-	-	-	-	-	-
1	CVCS-LTDN			OWN	-	-	-	-	-	-	-
				PRE	-	-	-	-	-	-	-
F-A	I046020		A-23	ISI	-	-	-	-	-	-	-
F1.10B	CVU-31		RIGID RESTRAINT (IA)	AUG	-	-	-	-	-	-	-
1	CVCS-LTDN			OWN	-	-	-	-	-	-	-
				PRE	-	-	-	-	-	-	-
F-A	I046820	ISI/VT/VT-106	A-23	ISI	-	-	-	s	-	-	-
F1.10B	CVU-29		RIGID RESTRAINT (IA)	AUG	-	-	-	-	-	-	-
1	CVCS-LTDN			OWN	-	-	-	-	-	-	-
				PRE	-	-	-	-	-	-	-
F-A	I048236		A-24	ISI	-	-	-	-	-	-	-
F1.10B	CVU-134		RIGID RESTRAINT	AUG	-	-	-	-	-	-	-
1	CVCS-LTDN			OWN	-	-	-	-	-	-	-
				PRE	-	-	-	-	-	-	-
F-A	I048260		A-24	ISI	-	-	-	-	-	-	-
F1.10B	CVU-135		RIGID RESTRAINT	AUG	-	-	-	-	-	-	-
1	CVCS-LTDN			OWN	-	-	-	-	-	-	-
				PRE	-	-	-	-	-	-	-
F-A	I049040		A-32A	ISI	-	-	-	-	-	-	-
F1.10B	CVU-90		RIGID RESTRAINT (IA)	AUG	-	-	-	-	-	-	-
1	CVCS-CHRG			OWN	-	-	-	-	-	-	-
				PRE	-	-	-	-	-	-	-
F-A	I049085		A-32A	ISI	-	-	-	-	-	-	-
F1.10B	CVU-91		GUIDE	AUG	-	-	-	-	-	-	-
1	CVCS-CHRG			OWN	-	-	-	-	-	-	-
				PRE	-	-	-	-	-	-	-
F-A	I049100		A-32A	ISI	-	-	-	-	-	-	-
F1.10B	CVU-92		GUIDE	AUG	-	-	-	-	-	-	-
1	CVCS-CHRG			OWN	-	-	-	-	-	-	-
				PRE	-	-	-	-	-	-	-
F-A	I049155		A-32A	ISI	-	-	-	-	-	-	-
F1.10B	CVU-95		U-BOLT	AUG	-	-	-	-	-	-	-
1	CVCS-CHRG			OWN	-	-	-	-	-	-	-
				PRE	-	-	-	-	-	-	-
F-A	I049220	ISI/VT/VT-106	A-32	ISI	-	-	-	-	-	-	s
F1.10B	CVU-99		U-BOLT	AUG	-	-	-	-	-	-	-
1	CVCS-CHRG			OWN	-	-	-	-	-	-	-
				PRE	-	-	-	-	-	-	-

Category, ItemNO, Class	Summary / CompID / System	Scope / Method / Procedure	Iso No. Comp. Desc. Code Case		Period 1 00	Period 1 02	Period 2 03	Period 2 05	Period 2 06	Period 3 08	Period 3 09
F-A	I049265		A-32	ISI	-	-	-	-	-	-	-
F1.10B	CVU-100		U-BOLT	AUG	-	-	-	-	-	-	-
1	CVCS-CHRG			OWN	-	-	-	-	-	-	-
				PRE	-	-	-	-	-	-	-
F-A	I049280		A-32	ISI	-	-	-	-	-	-	-
F1.10B	CVU-101		GUIDE	AUG	-	-	-	-	-	-	-
1	CVCS-CHRG			OWN	-	-	-	-	-	-	-
0				PRE	-	-	-	-	-	-	-
F-A	I049595		A-31A	ISI	-	-	-	-	-	-	-
F1.10B	CVU-172		ANCHOR (IA)	AUG	-	-	-	-	-	-	-
1	CVCS-CHRG			OWN	-	-	-	-	-	-	-
				PRE	-	-	-	-	-	-	-
F-A	I049610	ISI/VT/VT-106	A-31A	ISI	c	-	-	-	-	-	-
F1.10B	CVU-173		U-BOLT	AUG	-	-	-	-	-	-	-
1	CVCS-CHRG			OWN	-	-	-	-	-	-	-
				PRE	-	-	-	-	-	-	-
F-A	I049625		A-31A	ISI	-	-	-	-	-	-	-
F1.10B	CVU-174		U-BOLT	AUG	-	-	-	-	-	-	-
1	CVCS-CHRG			OWN	-	-	-	-	-	-	-
				PRE	-	-	-	-	-	-	-
F-A	I049630		A-31A	ISI	-	-	-	-	-	-	-
F1.10B	CVU-175		U-BOLT	AUG	-	-	-	-	-	-	-
1	CVCS-CHRG			OWN	-	-	-	-	-	-	-
				PRE	-	-	-	-	-	-	-
F-A	I049655		A-31	ISI	-	-	-	-	-	-	-
F1.10B	CVU-176		U-BOLT	AUG	-	-	-	-	-	-	-
1	CVCS-CHRG			OWN	-	-	-	-	-	-	-
				PRE	-	-	-	-	-	-	-
F-A	I049685		A-31	ISI	-	-	-	-	-	-	-
F1.10B	CVU-177		GUIDE	AUG	-	-	-	-	-	-	-
1	CVCS-CHRG			OWN	-	-	-	-	-	-	-
				PRE	-	-	-	-	-	-	-
F-A	I049695		A-31	ISI	-	-	-	-	-	-	-
F1.10B	CVU-179		GUIDE	AUG	-	-	-	-	-	-	-
1	CVCS-CHRG			OWN	-	-	-	-	-	-	-
				PRE	-	-	-	-	-	-	-
F-A	I049755		A-31	ISI	-	-	-	-	-	-	-
F1.10B	CVU-187		ANCHOR (IA)	AUG	-	-	-	-	-	-	-
1	CVCS-CHRG			OWN	-	-	-	-	-	-	-
				PRE	-	-	-	-	-	-	-

Category, ItemNO, Class	Summary / CompID / System	Scope / Method / Procedure	Iso No. Comp. Desc. Code Case		Period 1 00	Period 1 02	Period 2 03	Period 2 05	Period 2 06	Period 3 08	Period 3 09
F-A	I049760		A-31	ISI	-	-	-	-	-	-	-
F1.10B	CVU-188		GUIDE	AUG	-	-	-	-	-	-	-
1	CVCS-CHRG			OWN	-	-	-	-	-	-	-
				PRE	-	-	-	-	-	-	-
F-A	I049785		A-31	ISI	-	-	-	-	-	-	-
F1.10B	CVU-189		U-BOLT	AUG	-	-	-	-	-	-	-
1	CVCS-CHRG			OWN	-	-	-	-	-	-	-
				PRE	-	-	-	-	-	-	-
F-A	I051500		A-26	ISI	-	-	-	-	-	-	-
F1.10B	CVU-23		GUIDE	AUG	-	-	-	-	-	-	-
1	CVCS-CHRG			OWN	-	-	-	-	-	-	-
				PRE	-	-	-	-	-	-	-
F-A	I052530	ISI/VT/VT-106	A-26	ISI	-	-	-	-	-	-	s
F1.10B	CVU-24		ANCHOR (IA)	AUG	-	-	-	-	-	-	-
1	CVCS-CHRG			OWN	-	-	-	-	-	-	-
				PRE	-	-	-	-	-	-	-
F-A	I014400	OWN/VT/VT-106	A-3-2	ISI	-	-	-	-	-	-	-
F1.10C	RCU-1		VARIABLE SPRING	AUG	-	-	-	-	-	-	-
1	PZR			OWN	-	-	c	-	-	-	-
				PRE	-	-	-	-	-	-	-
F-A	I014800	OWN/VT/VT-106	A-10	ISI	-	-	-	-	-	-	-
F1.10C	RCU-25		VARIABLE SPRING	AUG	-	-	-	-	-	-	-
1	PZR			OWN	-	-	c	-	-	-	-
				PRE	-	-	-	-	-	-	-
F-A	I017025	OWN/VT/VT-106	A-10	ISI	-	-	-	-	-	-	-
F1.10C	RCU-17		VARIABLE SPRING	AUG	-	-	-	-	-	-	-
1	PZR			OWN	-	-	c	-	-	-	-
				PRE	-	-	-	-	-	-	-
F-A	I017350	OWN/VT/VT-106	A-10	ISI	-	-	-	-	-	-	-
F1.10C	RCU-16		VARIABLE SPRING	AUG	-	-	-	-	-	-	-
1	PZR			OWN	-	-	c	-	-	-	-
				PRE	-	-	-	-	-	-	-
F-A	I017500	OWN/VT/VT-106	A-10	ISI	-	-	-	-	-	-	-
F1.10C	RCU-15		VARIABLE SPRING	AUG	-	-	-	-	-	-	-
1	PZR			OWN	-	-	c	-	-	-	-
				PRE	-	-	-	-	-	-	-
F-A	I018825	OWN/VT/VT-106	A-9	ISI	-	-	-	-	-	-	-
F1.10C	RCU-4		VARIABLE SPRING	AUG	-	-	-	-	-	-	-
1	PZR			OWN	-	-	c	-	-	-	-
				PRE	-	-	-	-	-	-	-

Category, ItemNO, Class	Summary / CompID / System	Scope / Method / Procedure	Iso No. Comp. Desc. Code Case		Period 1 00	Period 1 02	Period 2 03	Period 2 05	Period 2 06	Period 3 08	Period 3 09
F-A	I019100	ISI/VT/VT-106	A-9	ISI	-	c	-	-	-	-	-
F1.10C	RCU-2	OWN/VT/VT-106	VARIABLE SPRING	AUG	-	-	-	-	-	-	-
1	PZR			OWN	-	-	c	-	-	-	-
				PRE	-	-	-	-	-	-	-
F-A	I020200	ISI/VT/VT-106	A-10	ISI	-	-	-	-	-	-	-
F1.10C	RCU-11	OWN/VT/VT-106	VARIABLE SPRING	AUG	-	-	-	-	-	-	-
1	PZR			OWN	-	c	B	-	-	-	-
				PRE	-	-	-	-	-	-	-
F-A	I020900	ISI/VT/VT-106	A-10	ISI	-	-	c	-	-	-	-
F1.10C	RCU-8		VARIABLE SPRING	AUG	-	-	-	-	-	-	-
1	PZR			OWN	-	-	-	-	-	-	-
				PRE	-	-	-	-	-	-	-
F-A	I021150	OWN/VT/VT-106	A-10	ISI	-	-	-	-	-	-	-
F1.10C	RCU-7		VARIABLE SPRING	AUG	-	-	-	-	-	-	-
1	PZR			OWN	-	-	c	-	-	-	-
				PRE	-	-	-	-	-	-	-
F-A	I021300	ISI/VT/VT-106	A-10	ISI	-	-	c	-	-	-	-
F1.10C	RCU-6		VARIABLE SPRING	AUG	-	-	-	-	-	-	-
1	PZR			OWN	-	-	-	-	-	-	-
				PRE	-	-	-	-	-	-	-
F-A	I024425		A-11	ISI	-	-	-	-	-	-	-
F1.10C	CVU-73		VARIABLE SPRING	AUG	-	-	-	-	-	-	-
1	CVCS-CHRG			OWN	-	-	-	-	-	-	-
				PRE	-	-	-	-	-	-	-
F-A	I024600		A-11	ISI	-	-	-	-	-	-	-
F1.10C	CVU-75		VARIABLE SPRING	AUG	-	-	-	-	-	-	-
1	CVCS-CHRG			OWN	-	-	-	-	-	-	-
				PRE	-	-	-	-	-	-	-
F-A	I024900		A-11	ISI	-	-	-	-	-	-	-
F1.10C	CVU-2		VARIABLE SPRING	AUG	-	-	-	-	-	-	-
1	CVCS-CHRG			OWN	-	-	-	-	-	-	-
				PRE	-	-	-	-	-	-	-
F-A	I025830		A-11	ISI	-	-	-	-	-	-	-
F1.10C	CVU-1		VARIABLE SPRING (IA)	AUG	-	-	-	-	-	-	-
1	PZR			OWN	-	-	-	-	-	-	-
				PRE	-	-	-	-	-	-	-
F-A	I026825		A-12	ISI	-	-	-	-	-	-	-
F1.10C	PS-8		HYDRAULIC SNUBBER	AUG	-	-	-	-	-	-	-
1	PZR			OWN	-	-	-	-	-	-	-
				PRE	-	-	-	-	-	-	-

Category, ItemNO, Class	Summary / CompID / System	Scope / Method / Procedure	Iso No. Comp. Desc. Code Case		Period 1 00	Period 1 02	Period 2 03	Period 2 05	Period 2 06	Period 3 08	Period 3 09
F-A	I027225	ISI/VT/VT-106	A-12	ISI	-	-	-	-	-	-	s
F1.10C	PS-5		HYDRAULIC SNUBBER	AUG	-	-	-	-	-	-	-
1	PZR			OWN	-	-	-	-	-	-	-
				PRE	-	-	-	-	-	-	-
F-A	I027226		A-12	ISI	-	-	-	-	-	-	-
F1.10C	PS-6		HYDRAULIC SNUBBER	AUG	-	-	-	-	-	-	-
1	PZR			OWN	-	-	-	-	-	-	-
				PRE	-	-	-	-	-	-	-
F-A	I029225	ISI/VT/VT-106	A-14	ISI	-	-	-	-	-	-	s
F1.10C	SIU-52		MECHANICAL SNUBBER	AUG	-	-	-	-	-	-	-
1	RHR			OWN	-	-	-	-	-	-	-
				PRE	-	-	-	-	-	-	-
F-A	I031125		A-15	ISI	-	-	-	-	-	-	-
F1.10C	RHU-33		MECHANICAL SNUBBER	AUG	-	-	-	-	-	-	-
1	RHR			OWN	-	-	-	-	-	-	-
				PRE	-	-	-	-	-	-	-
F-A	I031600		A-15	ISI	-	-	-	-	-	-	-
F1.10C	RHU-34		VARIABLE SPRING	AUG	-	-	-	-	-	-	-
1	RHR			OWN	-	-	-	-	-	-	-
				PRE	-	-	-	-	-	-	-
F-A	I032850		A-15	ISI	-	-	-	-	-	-	-
F1.10C	RHU-30		MECHANICAL SNUBBER	AUG	-	-	-	-	-	-	-
1	RHR			OWN	-	-	-	-	-	-	-
				PRE	-	-	-	-	-	-	-
F-A	I033600		A-16	ISI	-	-	-	-	-	-	-
F1.10C	SIU-46		VARIABLE SPRING	AUG	-	-	-	-	-	-	-
1	HPSI			OWN	-	-	-	-	-	-	-
				PRE	-	-	-	-	-	-	-
F-A	I033650	ISI/VT/VT-106	A-16	ISI	-	c	-	-	-	-	-
F1.10C	SIU-47		MECHANICAL SNUBBER	AUG	-	-	-	-	-	-	-
1	HPSI			OWN	-	-	-	-	-	-	-
				PRE	-	-	-	-	-	-	-
F-A	I033700	ISI/VT/VT-106	A-16	ISI	-	-	-	-	-	s	-
F1.10C	SIU-50		VARIABLE SPRING	AUG	-	-	-	-	-	-	-
1	HPSI			OWN	-	-	-	-	-	-	-
				PRE	-	-	-	-	-	-	-
F-A	I034000		A-16	ISI	-	-	-	-	-	-	-
F1.10C	SIU-51		VARIABLE SPRING	AUG	-	-	-	-	-	-	-
1	HPSI			OWN	-	-	-	-	-	-	-
				PRE	-	-	-	-	-	-	-

Category, ItemNO, Class	Summary / CompID / System	Scope / Method / Procedure	Iso No. Comp. Desc. Code Case		Period 1 00	Period 1 02	Period 2 03	Period 2 05	Period 2 06	Period 3 08	Period 3 09
F-A	I034530		A-17	ISI	-	-	-	-	-	-	-
F1.10C	SIU-3		MECHANICAL SNUBBER (IA)	AUG	-	-	-	-	-	-	-
1	HPSI			OWN	-	-	-	-	-	-	-
				PRE	-	-	-	-	-	-	-
F-A	I034900		A-17	ISI	-	-	-	-	-	-	-
F1.10C	SIU-2		VARIABLE SPRING	AUG	-	-	-	-	-	-	-
1	HPSI			OWN	-	-	-	-	-	-	-
				PRE	-	-	-	-	-	-	-
F-A	I035500		A-17	ISI	-	-	-	-	-	-	-
F1.10C	SIU-1		VARIABLE SPRING	AUG	-	-	-	-	-	-	-
1	HPSI			OWN	-	-	-	-	-	-	-
				PRE	-	-	-	-	-	-	-
F-A	I042400		A-22	ISI	-	-	-	-	-	-	-
F1.10C	1-P		VARIABLE SPRING	AUG	-	-	-	-	-	-	-
1	RC			OWN	-	-	-	-	-	-	-
				PRE	-	-	-	-	-	-	-
F-A	I043000	ISI/VT/VT-106	A-23A	ISI	-	-	-	-	-	s	-
F1.10C	CVU-38		VARIABLE SPRING	AUG	-	-	-	-	-	-	-
1	RC			OWN	-	-	-	-	-	-	-
				PRE	-	-	-	-	-	-	-
F-A	I045100		A-23	ISI	-	-	-	-	-	-	-
F1.10C	CVU-34		VARIABLE SPRING	AUG	-	-	-	-	-	-	-
1	CVCS-LTDN			OWN	-	-	-	-	-	-	-
				PRE	-	-	-	-	-	-	-
F-A	I046025		A-23	ISI	-	-	-	-	-	-	-
F1.10C	CVU-30		VARIABLE SPRING	AUG	-	-	-	-	-	-	-
1	CVCS-LTDN			OWN	-	-	-	-	-	-	-
				PRE	-	-	-	-	-	-	-
F-A	I047200	ISI/VT/VT-106	A-23	ISI	-	c	-	-	-	-	-
F1.10C	CVU-27		VARIABLE SPRING	AUG	-	-	-	-	-	-	-
1	CVCS-LTDN			OWN	-	-	-	-	-	-	-
				PRE	-	-	-	-	-	-	-
F-A	I047425		A-23	ISI	-	-	-	-	-	-	-
F1.10C	CVU-26		MECHANICAL SNUBBER	AUG	-	-	-	-	-	-	-
1	CVCS-LTDN			OWN	-	-	-	-	-	-	-
				PRE	-	-	-	-	-	-	-
F-A	I048210	ISI/VT/VT-106	A-24	ISI	-	-	-	-	-	s	-
F1.10C	CVU-133		VARIABLE SPRING	AUG	-	-	-	-	-	-	-
1	CVCS-LTDN			OWN	-	-	-	-	-	-	-
				PRE	-	-	-	-	-	-	-

Category, ItemNO, Class	Summary / CompID / System	Scope / Method / Procedure	Iso No. Comp. Desc. Code Case		Period 1 00	Period 1 02	Period 2 03	Period 2 05	Period 2 06	Period 3 08	Period 3 09
F-A	I049365	ISI/VT/VT-106	A-32	ISI	-	-	-	-	-	-	s
F1.10C	CVU-103		MECHANICAL SNUBBER	AUG	-	-	-	-	-	-	-
1	CVCS-CHRG			OWN	-	-	-	-	-	-	-
				PRE	-	-	-	-	-	-	-
F-A	I049370		A-32	ISI	-	-	-	-	-	-	-
F1.10C	CVU-104		MECHANICAL SNUBBER	AUG	-	-	-	-	-	-	-
1	CVCS-CHRG			OWN	-	-	-	-	-	-	-
				PRE	-	-	-	-	-	-	-
F-A	I050740	PSI/VT/VT-106	A-25	ISI	-	-	-	-	s	-	-
F1.10C	CVU-6	ISI/VT/VT-106	VARIABLE SPRING	AUG	-	-	-	-	-	-	-
1	CVCS-CHRG	PSI/VT/VT-106		OWN	-	-	-	-	-	-	-
				PRE	-	-	c	b	-	-	-
F-A	I077400		B-6	ISI	-	-	-	-	-	-	-
F1.20A	CVU-410		RIGID RESTRAINT (IA)	AUG	-	-	-	-	-	-	-
2	CVCS-CHRG			OWN	-	-	-	-	-	-	-
				PRE	-	-	-	-	-	-	-
F-A	I077600	ISI/VT/VT-106	B-6	ISI	-	c	-	-	-	-	-
F1.20A	CVU-412		RIGID RESTRAINT (IA)	AUG	-	-	-	-	-	-	-
2	CVCS-CHRG			OWN	-	-	-	-	-	-	-
				PRE	-	-	-	-	-	-	-
F-A	I077800		B-6	ISI	-	-	-	-	-	-	-
F1.20A	CVU-414		RIGID RESTRAINT (IA)	AUG	-	-	-	-	-	-	-
2	CVCS-CHRG			OWN	-	-	-	-	-	-	-
				PRE	-	-	-	-	-	-	-
F-A	I077900		B-6	ISI	-	-	-	-	-	-	-
F1.20A	CVU-415		RIGID RESTRAINT (IA)	AUG	-	-	-	-	-	-	-
2	CVCS-CHRG			OWN	-	-	-	-	-	-	-
				PRE	-	-	-	-	-	-	-
F-A	I081325	ISI/VT/VT-106	B-9	ISI	A	-	-	-	-	-	-
F1.20A	MSU-43		GUIDE	AUG	-	-	-	-	-	-	-
2	MS			OWN	-	-	-	-	-	-	-
				PRE	-	-	-	-	-	-	-
F-A	I086300	ISI/VT/VT-106	B-10A	ISI	A	-	-	-	-	-	-
F1.20A	MSU-11		GUIDE	AUG	-	-	-	-	-	-	-
2	MS			OWN	-	-	-	-	-	-	-
				PRE	-	-	-	-	-	-	-
F-A	I086600	ISI/VT/VT-106	B-10A	ISI	A	-	-	-	-	-	s
F1.20A	MSU-14		GUIDE	AUG	-	-	-	-	-	-	-
2	MS			OWN	-	-	-	-	-	-	-
				PRE	-	-	-	-	-	-	-

Category, ItemNO, Class	Summary / CompID / System	Scope / Method / Procedure	Iso No. Comp. Desc. Code Case		Period 1 00	Period 1 02	Period 2 03	Period 2 05	Period 2 06	Period 3 08	Period 3 09
F-A	I087400	ISI/VT/VT-106	B-10A	ISI	E	E	-	h	-	-	-
F1.20A	MSU-21	ISI/VT/VT-106	GUIDE	AUG	-	-	-	-	-	-	-
2	MS			OWN	-	-	-	-	-	-	-
				PRE	-	-	-	-	-	-	-
F-A	I087600	ISI/VT/VT-106	B-10A	ISI	E	E	-	-	-	-	-
F1.20A	MSU-24	ISI/VT/VT-106	GUIDE	AUG	-	-	-	-	-	-	-
2	MS			OWN	-	-	-	-	-	-	-
				PRE	-	-	-	-	-	-	-
F-A	I091250	ISI/VT/VT-106	B-11	ISI	-	-	-	-	-	s	-
F1.20A	FWU-14		RIGID RESTRAINT	AUG	-	-	-	-	-	-	-
2	FW			OWN	-	-	-	-	-	-	-
				PRE	-	-	-	-	-	-	-
F-A	I094850	AUG/VT/VT-106	B-14	ISI	-	-	E	-	-	-	-
F1.20A	FWU-43	ISI/VT/VT-106	RIGID RESTRAINT	AUG	-	E	-	-	-	-	-
2	FW			OWN	-	-	-	-	-	-	-
				PRE	-	-	-	-	-	-	-
F-A	I095200	AUG/VT/VT-106	B-14	ISI	-	-	E	-	-	-	-
F1.20A	FWU-45	ISI/VT/VT-106	RIGID RESTRAINT	AUG	-	E	-	-	-	-	-
2	FW			OWN	-	-	-	-	-	-	-
				PRE	-	-	-	-	-	-	-
F-A	I095300		B-14	ISI	-	-	-	-	-	-	-
F1.20A	FWU-46		RIGID RESTRAINT	AUG	-	-	-	-	-	-	-
2	FW			OWN	-	-	-	-	-	-	-
				PRE	-	-	-	-	-	-	-
F-A	I095900		B-14	ISI	-	-	-	-	-	-	-
F1.20A	FWU-49		RIGID RESTRAINT	AUG	-	-	-	-	-	-	-
2	FW			OWN	-	-	-	-	-	-	-
				PRE	-	-	-	-	-	-	-
F-A	I096100		B-14	ISI	-	-	-	-	-	-	-
F1.20A	FWU-50		RIGID RESTRAINT	AUG	-	-	-	-	-	-	-
2	FW			OWN	-	-	-	-	-	-	-
				PRE	-	-	-	-	-	-	-
F-A	I096500		B-14	ISI	-	-	-	-	-	-	-
F1.20A	FWU-53		GUIDE - RIGID HANGER	AUG	-	-	-	-	-	-	-
2	FW			OWN	-	-	-	-	-	-	-
				PRE	-	-	-	-	-	-	-
F-A	I096600	ISI/VT/VT-106	B-14	ISI	-	E	-	-	-	-	-
F1.20A	FWU-55		RIGID HANGER	AUG	-	-	-	-	-	-	-
2	FW			OWN	-	-	-	-	-	-	-
				PRE	-	-	-	-	-	-	-

Category, ItemNO, Class	Summary / CompID / System	Scope / Method / Procedure	Iso No. Comp. Desc. Code Case		Period 1 00	Period 1 02	Period 2 03	Period 2 05	Period 2 06	Period 3 08	Period 3 09
F-A	I096800	ISI/VT/VT-106	B-14	ISI	c	E	-	-	-	-	-
F1.20A	FWU-56	ISI/VT/VT-106	RIGID RESTRAINT	AUG	-	-	-	-	-	-	-
2	FW			OWN	-	-	-	-	-	-	-
				PRE	-	-	-	-	-	-	-
F-A	I097100		B-14	ISI	-	-	-	-	-	-	-
F1.20A	FWU-58		RIGID RESTRAINT	AUG	-	-	-	-	-	-	-
2	FW			OWN	-	-	-	-	-	-	-
				PRE	-	-	-	-	-	-	-
F-A	I101825		B-15	ISI	-	-	-	-	-	-	-
F1.20A	SIU-107		GUIDE	AUG	-	-	-	-	-	-	-
2	HPSI			OWN	-	-	-	-	-	-	-
				PRE	-	-	-	-	-	-	-
F-A	I102425		B-15	ISI	-	-	-	-	-	-	-
F1.20A	SIU-106		GUIDE	AUG	-	-	-	-	-	-	-
2	HPSI			OWN	-	-	-	-	-	-	-
				PRE	-	-	-	-	-	-	-
F-A	I104875		B-16A	ISI	-	-	-	-	-	-	-
F1.20A	SIU-102		GUIDE	AUG	-	-	-	-	-	-	-
2	HPSI			OWN	-	-	-	-	-	-	-
				PRE	-	-	-	-	-	-	-
F-A	I109000		B-17	ISI	-	-	-	-	-	-	-
F1.20A	RHU-2		RIGID HANGER	AUG	-	-	-	-	-	-	-
2	RHR			OWN	-	-	-	-	-	-	-
				PRE	-	-	-	-	-	-	-
F-A	I109400	ISI/VT/VT-106	B-17	ISI	-	c	-	-	-	-	-
F1.20A	RHU-3		RIGID HANGER	AUG	-	-	-	-	-	-	-
2	RHR			OWN	-	-	-	-	-	-	-
				PRE	-	-	-	-	-	-	-
F-A	I109800		B-17	ISI	-	-	-	-	-	-	-
F1.20A	RHU-4		RIGID HANGER	AUG	-	-	-	-	-	-	-
2	RHR			OWN	-	-	-	-	-	-	-
				PRE	-	-	-	-	-	-	-
F-A	I110100		B-17	ISI	-	-	-	-	-	-	-
F1.20A	RHU-5		RIGID HANGER	AUG	-	-	-	-	-	-	-
2	RHR			OWN	-	-	-	-	-	-	-
				PRE	-	-	-	-	-	-	-
F-A	I110225		B-17	ISI	-	-	-	-	-	-	-
F1.20A	RHU-6		GUIDE	AUG	-	-	-	-	-	-	-
2	RHR			OWN	-	-	-	-	-	-	-
				PRE	-	-	-	-	-	-	-

Category, ItemNO, Class	Summary / CompID / System	Scope / Method / Procedure	Iso No. Comp. Desc. Code Case		Period 1 00	Period 1 02	Period 2 03	Period 2 05	Period 2 06	Period 3 08	Period 3 09
F-A	I110650	ISI/VT/VT-106	B-17	ISI	-	-	-	s	-	-	-
F1.20A	RHU-9		RIGID SUPPORT (IA)	AUG	-	-	-	-	-	-	-
2	RHR			OWN	-	-	-	-	-	-	-
				PRE	-	-	-	-	-	-	-
F-A	I111100		B-18	ISI	-	-	-	-	-	-	-
F1.20A	RHU-11		RIGID HANGER	AUG	-	-	-	-	-	-	-
2	RHR			OWN	-	-	-	-	-	-	-
				PRE	-	-	-	-	-	-	-
F-A	I111500		B-18	ISI	-	-	-	-	-	-	-
F1.20A	RHU-15		RIGID RESTRAINT	AUG	-	-	-	-	-	-	-
2	RHR			OWN	-	-	-	-	-	-	-
				PRE	-	-	-	-	-	-	-
F-A	I112725		B-18	ISI	-	-	-	-	-	-	-
F1.20A	RHU-20		RIGID RESTRAINT	AUG	-	-	-	-	-	-	-
2	RHR			OWN	-	-	-	-	-	-	-
				PRE	-	-	-	-	-	-	-
F-A	I112900		B-18	ISI	-	-	-	-	-	-	-
F1.20A	RHU-21		RIGID SUPPORT (IA)	AUG	-	-	-	-	-	-	-
2	RHR			OWN	-	-	-	-	-	-	-
				PRE	-	-	-	-	-	-	-
F-A	I120300	ISI/VT/VT-106	B-19	ISI	-	-	c	-	-	-	-
F1.20A	RHU-100		RIGID SUPPORT (IA)	AUG	-	-	-	-	-	-	-
2	HPSI			OWN	-	-	-	-	-	-	-
				PRE	-	-	-	-	-	-	-
F-A	I121010		B-19	ISI	-	-	-	-	-	-	-
F1.20A	RHU-108		RIGID SUPPORT (IA)	AUG	-	-	-	-	-	-	-
2	HPSI			OWN	-	-	-	-	-	-	-
				PRE	-	-	-	-	-	-	-
F-A	I122000		B-19	ISI	-	-	-	-	-	-	-
F1.20A	RHU-111		RIGID SUPPORT (IA)	AUG	-	-	-	-	-	-	-
2	HPSI			OWN	-	-	-	-	-	-	-
				PRE	-	-	-	-	-	-	-
F-A	I122600		B-19	ISI	-	-	-	-	-	-	-
F1.20A	RHU-112		RIGID SUPPORT (IA)	AUG	-	-	-	-	-	-	-
2	HPSI			OWN	-	-	-	-	-	-	-
				PRE	-	-	-	-	-	-	-
F-A	I124200	ISI/VT/VT-106	B-19	ISI	-	-	-	s	-	-	-
F1.20A	RHU-102		RIGID SUPPORT (IA)	AUG	-	-	-	-	-	-	-
2	HPSI			OWN	-	-	-	-	-	-	-
				PRE	-	-	-	-	-	-	-

Category, ItemNO, Class	Summary / CompID / System	Scope / Method / Procedure	Iso No. Comp. Desc. Code Case		Period 1 00	Period 1 02	Period 2 03	Period 2 05	Period 2 06	Period 3 08	Period 3 09
F-A	I124600		B-19	ISI	-	-	-	-	-	-	-
F1.20A	RHU-121		GUIDE	AUG	-	-	-	-	-	-	-
2	HPSI			OWN	-	-	-	-	-	-	-
				PRE	-	-	-	-	-	-	-
F-A	I125300		B-19	ISI	-	-	-	-	-	-	-
F1.20A	RHU-124		RIGID SUPPORT (IA)	AUG	-	-	-	-	-	-	-
2	HPSI			OWN	-	-	-	-	-	-	-
				PRE	-	-	-	-	-	-	-
F-A	I125800		B-19	ISI	-	-	-	-	-	-	-
F1.20A	RHU-125		RIGID SUPPORT (IA)	AUG	-	-	-	-	-	-	-
2	HPSI			OWN	-	-	-	-	-	-	-
				PRE	-	-	-	-	-	-	-
F-A	I130425		B-20	ISI	-	-	-	-	-	-	-
F1.20A	RHU-80		RIGID RESTRAINT	AUG	-	-	-	-	-	-	-
2	RHR			OWN	-	-	-	-	-	-	-
				PRE	-	-	-	-	-	-	-
F-A	I130450		B-20	ISI	-	-	-	-	-	-	-
F1.20A	RHU-79		RIGID RESTRAINT	AUG	-	-	-	-	-	-	-
2	RHR			OWN	-	-	-	-	-	-	-
				PRE	-	-	-	-	-	-	-
F-A	I130725	OWN/VT/VT-106	B-20	ISI	-	-	A	-	-	-	-
F1.20A	RHU-77	OWN/VT/VT-106	RIGID SUPPORT (IA)	AUG	-	-	-	-	-	-	-
2	RHR	ISI/VT/VT-106		OWN	c	-	-	-	-	-	-
				PRE	-	-	-	-	-	-	-
F-A	I130750	ISI/VT/VT-106	B-20	ISI	-	-	A	-	-	-	-
F1.20A	RHU-78		GUIDE	AUG	-	-	-	-	-	-	-
2	RHR			OWN	-	-	-	-	-	-	-
				PRE	-	-	-	-	-	-	-
F-A	I131800	ISI/VT/VT-106	B-20	ISI	-	-	E	-	-	-	-
F1.20A	RHU-74		GUIDE	AUG	-	-	-	-	-	-	-
2	RHR			OWN	-	-	-	-	-	-	-
				PRE	-	-	-	-	-	-	-
F-A	I133600		B-22	ISI	-	-	-	-	-	-	-
F1.20A	RHU-29		RIGID RESTRAINT	AUG	-	-	-	-	-	-	-
2	RHR			OWN	-	-	-	-	-	-	-
				PRE	-	-	-	-	-	-	-
F-A	I134000		B-22	ISI	-	-	-	-	-	-	-
F1.20A	RHU-27		RIGID RESTRAINT	AUG	-	-	-	-	-	-	-
2	RHR			OWN	-	-	-	-	-	-	-
				PRE	-	-	-	-	-	-	-

Category, ItemNO, Class	Summary / CompID / System	Scope / Method / Procedure	Iso No. Comp. Desc. Code Case		Period 1 00	Period 1 02	Period 2 03	Period 2 05	Period 2 06	Period 3 08	Period 3 09
F-A	I134150		B-22	ISI	-	-	-	-	-	-	-
F1.20A	RHU-25		RIGID HANGER	AUG	-	-	-	-	-	-	-
2	RHR			OWN	-	-	-	-	-	-	-
				PRE	-	-	-	-	-	-	-
F-A	I134400		B-22	ISI	-	-	-	-	-	-	-
F1.20A	RHU-24		RIGID HANGER	AUG	-	-	-	-	-	-	-
2	RHR			OWN	-	-	-	-	-	-	-
				PRE	-	-	-	-	-	-	-
F-A	I136200	ISI/VT/VT-106	B-20	ISI	-	-	A	-	-	-	-
F1.20A	RHU-65		RIGID HANGER	AUG	-	-	-	-	-	-	-
2	RHR			OWN	-	-	-	-	-	-	-
				PRE	-	-	-	-	-	-	-
F-A	I136500	ISI/VT/VT-106	B-20	ISI	-	-	A	-	-	-	s
F1.20A	RHU-64	ISI/VT/VT-106	RIGID RESTRAINT	AUG	-	-	-	-	-	-	-
2	RHR			OWN	-	-	-	-	-	-	-
				PRE	-	-	-	-	-	-	-
F-A	I139350	ISI/VT/VT-106	B-23	ISI	-	-	A	-	-	-	-
F1.20A	RHU-35		RIGID RESTRAINT	AUG	-	-	-	-	-	-	-
2	RHR			OWN	-	-	-	-	-	-	-
				PRE	-	-	-	-	-	-	-
F-A	I139850	ISI/VT/VT-106	B-23	ISI	-	-	p	a	-	h	s
F1.20A	RHU-37	ISI/VT/VT-106	GUIDE (IA)	AUG	-	-	-	-	-	-	-
2	RHR	ISI/VT/VT-106		OWN	-	-	-	-	-	-	-
		ISI/VT/VT-106		PRE	-	-	-	s	-	-	-
F-A	I140000	ISI/VT/VT-106	B-23	ISI	c	-	A	-	-	-	-
F1.20A	RHU-38	ISI/VT/VT-106	RIGID HANGER	AUG	-	-	-	-	-	-	-
2	RHR			OWN	-	-	-	-	-	-	-
				PRE	-	-	-	-	-	-	-
F-A	I140500	ISI/VT/VT-106	B-23	ISI	-	-	A	-	-	-	-
F1.20A	RHU-39		RIGID HANGER	AUG	-	-	-	-	-	-	-
2	RHR			OWN	-	-	-	-	-	-	-
				PRE	-	-	-	-	-	-	-
F-A	I142600	ISI/VT/VT-106	B-23	ISI	-	-	A	-	-	-	-
F1.20A	RHU-42		GUIDE	AUG	-	-	-	-	-	-	-
2	RHR			OWN	-	-	-	-	-	-	-
				PRE	-	-	-	-	-	-	-
F-A	I142950	ISI/VT/VT-106	B-23	ISI	-	-	A	-	-	-	-
F1.20A	RHU-43		GUIDE	AUG	-	-	-	-	-	-	-
2	RHR			OWN	-	-	-	-	-	-	-
				PRE	-	-	-	-	-	-	-

Category, ItemNO, Class	Summary / CompID / System	Scope / Method / Procedure	Iso No. Comp. Desc. Code Case		Period 1 00	Period 1 02	Period 2 03	Period 2 05	Period 2 06	Period 3 08	Period 3 09
F-A	I144100		B-24	ISI	-	-	-	-	-	-	-
F1.20A	RHU-45		RIGID RESTRAINT	AUG	-	-	-	-	-	-	-
2	RHR			OWN	-	-	-	-	-	-	-
				PRE	-	-	-	-	-	-	-
F-A	I145600		B-26	ISI	-	-	-	-	-	-	-
F1.20A	RHU-56		RIGID RESTRAINT	AUG	-	-	-	-	-	-	-
2	RHR			OWN	-	-	-	-	-	-	-
				PRE	-	-	-	-	-	-	-
F-A	I145885		B-25	ISI	-	-	-	-	-	-	-
F1.20A	RHU-55		RIGID SUPPORT (IA)	AUG	-	-	-	-	-	-	-
2	RHR			OWN	-	-	-	-	-	-	-
				PRE	-	-	-	-	-	-	-
F-A	I148300		B-26	ISI	-	-	-	-	-	-	-
F1.20A	RHU-96		RIGID HANGER	AUG	-	-	-	-	-	-	-
2	RHR			OWN	-	-	-	-	-	-	-
				PRE	-	-	-	-	-	-	-
F-A	I148700		B-26	ISI	-	-	-	-	-	-	-
F1.20A	RHU-98		RIGID RESTRAINT	AUG	-	-	-	-	-	-	-
2	RHR			OWN	-	-	-	-	-	-	-
				PRE	-	-	-	-	-	-	-
F-A	I149600		B-26	ISI	-	-	-	-	-	-	-
F1.20A	RHU-99		RIGID SUPPORT (IA)	AUG	-	-	-	-	-	-	-
2	RHR			OWN	-	-	-	-	-	-	-
				PRE	-	-	-	-	-	-	-
F-A	I150600	ISI/VT/VT-106	B-25	ISI	-	-	-	-	-	-	s
F1.20A	RHU-48		RIGID RESTRAINT (IA)	AUG	-	-	-	-	-	-	-
2	RHR			OWN	-	-	-	-	-	-	-
				PRE	-	-	-	-	-	-	-
F-A	I151100		B-25	ISI	-	-	-	-	-	-	-
F1.20A	RHU-49		RIGID SUPPORT (IA)	AUG	-	-	-	-	-	-	-
2	RHR			OWN	-	-	-	-	-	-	-
				PRE	-	-	-	-	-	-	-
F-A	I152500		B-25	ISI	-	-	-	-	-	-	-
F1.20A	RHU-52		GUIDE	AUG	-	-	-	-	-	-	-
2	RHR			OWN	-	-	-	-	-	-	-
				PRE	-	-	-	-	-	-	-
F-A	I153200	ISI/VT/VT-106	B-25	ISI	-	-	c	-	-	-	-
F1.20A	RHU-54		RIGID SUPPORT (IA)	AUG	-	-	-	-	-	-	-
2	RHR			OWN	-	-	-	-	-	-	-
				PRE	-	-	-	-	-	-	-

Category, ItemNO, Class	Summary / CompID / System	Scope / Method / Procedure	Iso No. Comp. Desc. Code Case		Period 1 00	Period 1 02	Period 2 03	Period 2 05	Period 2 06	Period 3 08	Period 3 09
F-A	I153900		B-27	ISI	-	-	-	-	-	-	-
F1.20A	RHU-57		RIGID HANGER	AUG	-	-	-	-	-	-	-
2	RHR			OWN	-	-	-	-	-	-	-
				PRE	-	-	-	-	-	-	-
F-A	I154250		B-27	ISI	-	-	-	-	-	-	-
F1.20A	RHU-58		RIGID HANGER (IA)	AUG	-	-	-	-	-	-	-
2	RHR			OWN	-	-	-	-	-	-	-
				PRE	-	-	-	-	-	-	-
F-A	I155700		B-27	ISI	-	-	-	-	-	-	-
F1.20A	RHU-106		RIGID RESTRAINT	AUG	-	-	-	-	-	-	-
2	RHR			OWN	-	-	-	-	-	-	-
				PRE	-	-	-	-	-	-	-
F-A	I156100		B-27	ISI	-	-	-	-	-	-	-
F1.20A	RHU-104		RIGID HANGER	AUG	-	-	-	-	-	-	-
2	RHR			OWN	-	-	-	-	-	-	-
				PRE	-	-	-	-	-	-	-
F-A	I156900		B-27	ISI	-	-	-	-	-	-	-
F1.20A	RHU-103		RIGID SUPPORT (IA)	AUG	-	-	-	-	-	-	-
2	RHR			OWN	-	-	-	-	-	-	-
				PRE	-	-	-	-	-	-	-
F-A	I159100	ISI/VT/VT-106	B-19	ISI	-	c	-	-	-	-	-
F1.20A	RHU-101		RIGID SUPPORT (IA)	AUG	-	-	-	-	-	-	-
2	CS			OWN	-	-	-	-	-	-	-
				PRE	-	-	-	-	-	-	-
F-A	I160550		B-16B	ISI	-	-	-	-	-	-	-
F1.20A	RHU-126		RIGID SUPPORT (IA)	AUG	-	-	-	-	-	-	-
2	HPSI			OWN	-	-	-	-	-	-	-
				PRE	-	-	-	-	-	-	-
F-A	I160664	ISI/VT/VT-106	B-16B	ISI	-	-	-	e	-	-	-
F1.20A	RHU-113		RIGID SUPPORT (IA)	AUG	-	-	-	-	-	-	-
2	HPSI			OWN	-	-	-	-	-	-	-
				PRE	-	-	-	-	-	-	-
F-A	I160740	ISI/VT/VT-106	B-16B	ISI	-	-	-	e	-	-	-
F1.20A	RHU-117		GUIDE	AUG	-	-	-	-	-	-	-
2	HPSI			OWN	-	-	-	-	-	-	-
				PRE	-	-	-	-	-	-	-
F-A	I160850		B-16B	ISI	-	-	-	-	-	-	-
F1.20A	RHU-120		RIGID SUPPORT (IA)	AUG	-	-	-	-	-	-	-
2	HPSI			OWN	-	-	-	-	-	-	-
				PRE	-	-	-	-	-	-	-

Category, ItemNO, Class	Summary / CompID / System	Scope / Method / Procedure	Iso No. Comp. Desc. Code Case		Period 1 00	Period 1 02	Period 2 03	Period 2 05	Period 2 06	Period 3 08	Period 3 09
F-A	I161110		B-37	ISI	-	-	-	-	-	-	-
F1.20A	SIU-83		RIGID RESTRAINT	AUG	-	-	-	-	-	-	-
2	HPSI			OWN	-	-	-	-	-	-	-
				PRE	-	-	-	-	-	-	-
F-A	I161160		B-37	ISI	-	-	-	-	-	-	-
F1.20A	SIU-80		RIGID RESTRAINT	AUG	-	-	-	-	-	-	-
2	HPSI			OWN	-	-	-	-	-	-	-
				PRE	-	-	-	-	-	-	-
F-A	I161220		B-37	ISI	-	-	-	-	-	-	-
F1.20A	SIU-78		RIGID RESTRAINT	AUG	-	-	-	-	-	-	-
2	HPSI			OWN	-	-	-	-	-	-	-
				PRE	-	-	-	-	-	-	-
F-A	I161260	ISI/VT/VT-106	B-37	ISI	c	-	-	-	-	-	-
F1.20A	SIU-76		RIGID RESTRAINT	AUG	-	-	-	-	-	-	-
2	HPSI			OWN	-	-	-	-	-	-	-
				PRE	-	-	-	-	-	-	-
F-A	I161270	ISI/VT/VT-106	B-37	ISI	-	-	-	s	-	-	-
F1.20A	SIU-75		RIGID RESTRAINT	AUG	-	-	-	-	-	-	-
2	HPSI			OWN	-	-	-	-	-	-	-
				PRE	-	-	-	-	-	-	-
F-A	I161300		B-37	ISI	-	-	-	-	-	-	-
F1.20A	SIU-74		RIGID RESTRAINT	AUG	-	-	-	-	-	-	-
2	HPSI			OWN	-	-	-	-	-	-	-
				PRE	-	-	-	-	-	-	-
F-A	I161350		B-37	ISI	-	-	-	-	-	-	-
F1.20A	SIU-73		RIGID RESTRAINT	AUG	-	-	-	-	-	-	-
2	HPSI			OWN	-	-	-	-	-	-	-
				PRE	-	-	-	-	-	-	-
F-A	I161490		B-38	ISI	-	-	-	-	-	-	-
F1.20A	SIU-43		RIGID RESTRAINT	AUG	-	-	-	-	-	-	-
2	HPSI			OWN	-	-	-	-	-	-	-
				PRE	-	-	-	-	-	-	-
F-A	I161520		B-38	ISI	-	-	-	-	-	-	-
F1.20A	SIU-41		RIGID RESTRAINT	AUG	-	-	-	-	-	-	-
2	HPSI			OWN	-	-	-	-	-	-	-
				PRE	-	-	-	-	-	-	-
F-A	I162170	PSI/VT/VT-106	B-39	ISI	-	-	-	-	s	-	-
F1.20A	SIU-31		RIGID RESTRAINT	AUG	-	-	-	-	-	-	-
2	HPSI			OWN	-	-	-	-	-	-	-
				PRE	-	c	-	-	-	-	-

Category, ItemNO, Class	Summary / CompID / System	Scope / Method / Procedure	Iso No. Comp. Desc. Code Case		Period 1 00	Period 1 02	Period 2 03	Period 2 05	Period 2 06	Period 3 08	Period 3 09
F-A	I162210		B-39	ISI	-	-	-	-	-	-	-
F1.20A	SIU-29		RIGID RESTRAINT	AUG	-	-	-	-	-	-	-
2	HPSI			OWN	-	-	-	-	-	-	-
				PRE	-	-	-	-	-	-	-
F-A	I162560		B-40	ISI	-	-	-	-	-	-	-
F1.20A	SIU-94		RIGID RESTRAINT	AUG	-	-	-	-	-	-	-
2	HPSI			OWN	-	-	-	-	-	-	-
				PRE	-	-	-	-	-	-	-
F-A	I162600		B-40	ISI	-	-	-	-	-	-	-
F1.20A	SIU-92		RIGID RESTRAINT	AUG	-	-	-	-	-	-	-
2	HPSI			OWN	-	-	-	-	-	-	-
				PRE	-	-	-	-	-	-	-
F-A	I162670		B-40	ISI	-	-	-	-	-	-	-
F1.20A	SIU-89		RIGID RESTRAINT	AUG	-	-	-	-	-	-	-
2	HPSI			OWN	-	-	-	-	-	-	-
				PRE	-	-	-	-	-	-	-
F-A	I162760		B-41	ISI	-	-	-	-	-	-	-
F1.20A	SIU-69		RIGID RESTRAINT	AUG	-	-	-	-	-	-	-
2	HPSI			OWN	-	-	-	-	-	-	-
				PRE	-	-	-	-	-	-	-
F-A	I163020		B-41	ISI	-	-	-	-	-	-	-
F1.20A	SIU-85		RIGID SUPPORT (IA)	AUG	-	-	-	-	-	-	-
2	HPSI			OWN	-	-	-	-	-	-	-
				PRE	-	-	-	-	-	-	-
F-A	I163040		B-41	ISI	-	-	-	-	-	-	-
F1.20A	SIU-86		GUIDE	AUG	-	-	-	-	-	-	-
2	HPSI			OWN	-	-	-	-	-	-	-
				PRE	-	-	-	-	-	-	-
F-A	I163290		B-41	ISI	-	-	-	-	-	-	-
F1.20A	SIU-71		RIGID SUPPORT (IA)	AUG	-	-	-	-	-	-	-
2	HPSI			OWN	-	-	-	-	-	-	-
				PRE	-	-	-	-	-	-	-
F-A	I163630		B-42	ISI	-	-	-	-	-	-	-
F1.20A	SIU-67		RIGID RESTRAINT	AUG	-	-	-	-	-	-	-
2	HPSI			OWN	-	-	-	-	-	-	-
				PRE	-	-	-	-	-	-	-
F-A	I163640		B-42	ISI	-	-	-	-	-	-	-
F1.20A	SIU-66		RIGID RESTRAINT	AUG	-	-	-	-	-	-	-
2	HPSI			OWN	-	-	-	-	-	-	-
				PRE	-	-	-	-	-	-	-

Category, ItemNO, Class	Summary / CompID / System	Scope / Method / Procedure	Iso No. Comp. Desc. Code Case		Period 1 00	Period 1 02	Period 2 03	Period 2 05	Period 2 06	Period 3 08	Period 3 09
F-A	I163690	ISI/VT/VT-106	B-42	ISI	c	-	-	-	-	-	-
F1.20A	SIU-63		RIGID SUPPORT	AUG	-	-	-	-	-	-	-
2	HPSI			OWN	-	-	-	-	-	-	-
				PRE	-	-	-	-	-	-	-
F-A	I163750		B-42	ISI	-	-	-	-	-	-	-
F1.20A	SIU-61		RIGID SUPPORT	AUG	-	-	-	-	-	-	-
2	HPSI			OWN	-	-	-	-	-	-	-
				PRE	-	-	-	-	-	-	-
F-A	I163820		B-42	ISI	-	-	-	-	-	-	-
F1.20A	SIU-58		RIGID SUPPORT	AUG	-	-	-	-	-	-	-
2	HPSI			OWN	-	-	-	-	-	-	-
				PRE	-	-	-	-	-	-	-
F-A	I164002		B-43	ISI	-	-	-	-	-	-	-
F1.20A	SIU-24		GUIDE	AUG	-	-	-	-	-	-	-
2	HPSI			OWN	-	-	-	-	-	-	-
				PRE	-	-	-	-	-	-	-
F-A	I164050	ISI/VT/VT-106	B-43	ISI	-	-	-	s	-	-	-
F1.20A	SIU-21		RIGID HANGER	AUG	-	-	-	-	-	-	-
2	HPSI			OWN	-	-	-	-	-	-	-
				PRE	-	-	-	-	-	-	-
F-A	I164070		B-43	ISI	-	-	-	-	-	-	-
F1.20A	SIU-19		RIGID RESTRAINT	AUG	-	-	-	-	-	-	-
2	HPSI			OWN	-	-	-	-	-	-	-
				PRE	-	-	-	-	-	-	-
F-A	I164140		B-43	ISI	-	-	-	-	-	-	-
F1.20A	SIU-16		RIGID SUPPORT	AUG	-	-	-	-	-	-	-
2	HPSI			OWN	-	-	-	-	-	-	-
				PRE	-	-	-	-	-	-	-
F-A	I164190		B-43	ISI	-	-	-	-	-	-	-
F1.20A	SIU-14		RIGID SUPPORT	AUG	-	-	-	-	-	-	-
2	HPSI			OWN	-	-	-	-	-	-	-
				PRE	-	-	-	-	-	-	-
F-A	I164310		B-43	ISI	-	-	-	-	-	-	-
F1.20A	SIU-12		GUIDE	AUG	-	-	-	-	-	-	-
2	HPSI			OWN	-	-	-	-	-	-	-
				PRE	-	-	-	-	-	-	-
F-A	I166840		B-46	ISI	-	-	-	-	-	-	-
F1.20A	CSU-33		RIGID SUPPORT (IA)	AUG	-	-	-	-	-	-	-
2	CS			OWN	-	-	-	-	-	-	-
				PRE	-	-	-	-	-	-	-

Category, ItemNO, Class	Summary / CompID / System	Scope / Method / Procedure	Iso No. Comp. Desc. Code Case		Period 1 00	Period 1 02	Period 2 03	Period 2 05	Period 2 06	Period 3 08	Period 3 09
F-A	I168340		B-47	ISI	-	-	-	-	-	-	-
F1.20A	CSU-57		RIGID SUPPORT (IA)	AUG	-	-	-	-	-	-	-
2	CS			OWN	-	-	-	-	-	-	-
				PRE	-	-	-	-	-	-	-
F-A	I075430		B-6	ISI	-	-	-	-	-	-	-
F1.20B	CF-S1		SUPPORT (IA)	AUG	-	-	-	-	-	-	-
2	CVCS-CHRG			OWN	-	-	-	-	-	-	-
				PRE	-	-	-	-	-	-	-
F-A	I075460		B-6	ISI	-	-	-	-	-	-	-
F1.20B	CF-S2		SUPPORT (IA)	AUG	-	-	-	-	-	-	-
2	CVCS-CHRG			OWN	-	-	-	-	-	-	-
				PRE	-	-	-	-	-	-	-
F-A	I077500		B-6	ISI	-	-	-	-	-	-	-
F1.20B	CVU-411		RIGID RESTRAINT (IA)	AUG	-	-	-	-	-	-	-
2	CVCS-CHRG			OWN	-	-	-	-	-	-	-
				PRE	-	-	-	-	-	-	-
F-A	I077700	ISI/VT/VT-106	B-6	ISI	c	-	-	-	-	-	-
F1.20B	CVU-413		RIGID RESTRAINT (IA)	AUG	-	-	-	-	-	-	-
2	CVCS-CHRG			OWN	-	-	-	-	-	-	-
				PRE	-	-	-	-	-	-	-
F-A	I080400	OWN/VT/VT-106	B-9	ISI	-	-	-	-	-	-	-
F1.20B	PS-A, PEN 401 ANCHOR (OUTCV)		ANCHOR (IA)	AUG	-	-	-	-	-	-	-
2	MS			OWN	c	-	-	-	-	-	-
				PRE	-	-	-	-	-	-	-
F-A	I080450	OWN/VT/VT-106	B-9	ISI	-	-	-	-	-	-	-
F1.20B	PS-B, PEN 401 ANCHOR (INCV)		ANCHOR (IA)	AUG	-	-	-	-	-	-	-
2	MS			OWN	c	-	-	-	-	-	-
				PRE	-	-	-	-	-	-	-
F-A	I082525	ISI/VT/VT-106	B-9A	ISI	A	-	-	-	-	-	-
F1.20B	MSU-37		GUIDE (IA)	AUG	-	-	-	-	-	-	-
2	MS			OWN	-	-	-	-	-	-	-
				PRE	-	-	-	-	-	-	-
F-A	I083400	ISI/VT/VT-106	B-9A	ISI	A	-	-	-	-	s	-
F1.20B	MSU-36	ISI/VT/VT-106	GUIDE (IA)	AUG	-	-	-	-	-	-	-
2	MS			OWN	-	-	-	-	-	-	-
				PRE	-	-	-	-	-	-	-
F-A	I085900	OWN/VT/VT-106	B-10A	ISI	-	-	-	-	-	-	-
F1.20B	PS-A, PEN 402 ANCHOR (INCV)	OWN//	ANCHOR (IA)	AUG	-	-	-	-	-	-	-
2	MS			OWN	c	-	-	-	b	-	-
				PRE	-	-	-	-	-	-	-

Category, ItemNO, Class	Summary / CompID / System	Scope / Method / Procedure	Iso No. Comp. Desc. Code Case		Period 1 00	Period 1 02	Period 2 03	Period 2 05	Period 2 06	Period 3 08	Period 3 09
F-A	I085950	OWN/VT/VT-106	B-10A	ISI	-	-	-	-	-	-	-
F1.20B	PS-B, PEN 402 ANCHOR (OUTCV)	OWN//	ANCHOR (IA)	AUG	-	-	-	-	-	-	-
2	MS			OWN	c	-	-	-	b	-	-
				PRE	-	-	-	-	-	-	-
F-A	I088830	ISI/VT/VT-106	B-10	ISI	c	-	-	-	-	-	-
F1.20B	MSU-33		GUIDE (IA)	AUG	-	-	-	-	-	-	-
2	MS			OWN	-	-	-	-	-	-	-
				PRE	-	-	-	-	-	-	-
F-A	I089800	OWN/VT/VT-106	B-10	ISI	-	-	-	-	-	-	-
F1.20B	MSU-34		GUIDE (IA)	AUG	-	-	-	-	-	-	-
2	MS			OWN	E	-	-	-	-	-	-
				PRE	-	-	-	-	-	-	-
F-A	I091900	OWN/VT/VT-106	B-11	ISI	-	-	-	-	-	-	-
F1.20B	PS-A, PEN 403 ANCHOR (OUTCV)		ANCHOR (IA)	AUG	-	-	-	-	-	-	-
2	FW			OWN	c	-	-	-	-	-	-
				PRE	-	-	-	-	-	-	-
F-A	I091950	ISI/VT/VT-106	B-12	ISI	c	-	-	-	-	-	-
F1.20B	PS-B, PEN 403 ANCHOR (INCV)		ANCHOR (IA)	AUG	-	-	-	-	-	-	-
2	FW			OWN	-	-	-	-	-	-	-
				PRE	-	-	-	-	-	-	-
F-A	I097125		B-14	ISI	-	-	-	-	-	-	-
F1.20B	FWU-59		RIGID RESTRAINT	AUG	-	-	-	-	-	-	-
2	FW			OWN	-	-	-	-	-	-	-
				PRE	-	-	-	-	-	-	-
F-A	I097400	OWN/VT/VT-106	B-14	ISI	-	-	-	-	-	-	-
F1.20B	PS-A, PEN 404 ANCHOR (OUTCV)		ANCHOR (IA)	AUG	-	-	-	-	-	-	-
2	FW			OWN	c	-	-	-	-	-	-
				PRE	-	-	-	-	-	-	-
F-A	I097450	OWN/VT/VT-106	B-13	ISI	-	-	-	-	-	-	-
F1.20B	PS-B, PEN 404 ANCHOR (INCV)	OWN//	ANCHOR (IA)	AUG	-	-	-	-	-	-	-
2	FW			OWN	c	-	-	-	h	-	-
				PRE	-	-	-	-	-	-	-
F-A	I100325		B-15	ISI	-	-	-	-	-	-	-
F1.20B	SIU-109		GUIDE	AUG	-	-	-	-	-	-	-
2	HPSI			OWN	-	-	-	-	-	-	-
				PRE	-	-	-	-	-	-	-
F-A	I100925		B-15	ISI	-	-	-	-	-	-	-
F1.20B	SIU-108		GUIDE	AUG	-	-	-	-	-	-	-
2	HPSI			OWN	-	-	-	-	-	-	-
				PRE	-	-	-	-	-	-	-

Category, ItemNO, Class	Summary / CompID / System	Scope / Method / Procedure	Iso No. Comp. Desc. Code Case		Period 1 00	Period 1 02	Period 2 03	Period 2 05	Period 2 06	Period 3 08	Period 3 09
F-A	I102850	ISI/VT/VT-106	B-16	ISI	c	-	-	-	-	-	-
F1.20B	SIU-105		GUIDE	AUG	-	-	-	-	-	-	-
2	HPSI			OWN	-	-	-	-	-	-	-
				PRE	-	-	-	-	-	-	-
F-A	I104200		B-16	ISI	-	-	-	-	-	-	-
F1.20B	SIU-104		RIGID SUPPORT (IA)	AUG	-	-	-	-	-	-	-
2	HPSI			OWN	-	-	-	-	-	-	-
				PRE	-	-	-	-	-	-	-
F-A	I106050		B-16	ISI	-	-	-	-	-	-	-
F1.20B	SIU-103		RIGID SUPPORT (IA)	AUG	-	-	-	-	-	-	-
2	HPSI			OWN	-	-	-	-	-	-	-
				PRE	-	-	-	-	-	-	-
F-A	I106950	ISI/VT/VT-106	B-16A	ISI	-	-	c	-	-	-	-
F1.20B	SIU-101		GUIDE	AUG	-	-	-	-	-	-	-
2	HPSI			OWN	-	-	-	-	-	-	-
				PRE	-	-	-	-	-	-	-
F-A	I107220		B-16A	ISI	-	-	-	-	-	-	-
F1.20B	SIU-100		ANCHOR (IA)	AUG	-	-	-	-	-	-	-
2	HPSI			OWN	-	-	-	-	-	-	-
				PRE	-	-	-	-	-	-	-
F-A	I108450		B-17	ISI	-	-	-	-	-	-	-
F1.20B	PEN 111 ANCHOR		ANCHOR (IA)	AUG	-	-	-	-	-	-	-
2	RHR			OWN	-	-	-	-	-	-	-
				PRE	-	-	-	-	-	-	-
F-A	I111225	ISI/VT/VT-106	B-18	ISI	-	-	-	-	-	s	-
F1.20B	RHU-14		RIGID RESTRAINT (IA)	AUG	-	-	-	-	-	-	-
2	RHR			OWN	-	-	-	-	-	-	-
				PRE	-	-	-	-	-	-	-
F-A	I111250	ISI/VT/VT-106	B-18	ISI	-	-	-	-	-	s	-
F1.20B	RHU-13		RIGID RESTRAINT	AUG	-	-	-	-	-	-	-
2	RHR			OWN	-	-	-	-	-	-	-
				PRE	-	-	-	-	-	-	-
F-A	I111300		B-18	ISI	-	-	-	-	-	-	-
F1.20B	RHU-12		RIGID RESTRAINT	AUG	-	-	-	-	-	-	-
2	RHR			OWN	-	-	-	-	-	-	-
				PRE	-	-	-	-	-	-	-
F-A	I112100		B-18	ISI	-	-	-	-	-	-	-
F1.20B	RHU-17		U-BOLT	AUG	-	-	-	-	-	-	-
2	RHR			OWN	-	-	-	-	-	-	-
				PRE	-	-	-	-	-	-	-

Category, ItemNO, Class	Summary / CompID / System	Scope / Method / Procedure	Iso No. Comp. Desc. Code Case		Period 1 00	Period 1 02	Period 2 03	Period 2 05	Period 2 06	Period 3 08	Period 3 09
F-A	I112200	ISI/VT/VT-106	B-18	ISI	-	-	-	-	-	s	-
F1.20B	RHU-18		RIGID RESTRAINT (IA)	AUG	-	-	-	-	-	-	-
2	RHR			OWN	-	-	-	-	-	-	-
				PRE	-	-	-	-	-	-	-
F-A	I112300		B-18	ISI	-	-	-	-	-	-	-
F1.20B	RHU-19		U-BOLT	AUG	-	-	-	-	-	-	-
2	RHR			OWN	-	-	-	-	-	-	-
				PRE	-	-	-	-	-	-	-
F-A	I133900		B-22	ISI	-	-	-	-	-	-	-
F1.20B	RHU-28		RIGID RESTRAINT (IA)	AUG	-	-	-	-	-	-	-
2	RHR			OWN	-	-	-	-	-	-	-
				PRE	-	-	-	-	-	-	-
F-A	I134100		B-22	ISI	-	-	-	-	-	-	-
F1.20B	RHU-26		RIGID RESTRAINT	AUG	-	-	-	-	-	-	-
2	RHR			OWN	-	-	-	-	-	-	-
				PRE	-	-	-	-	-	-	-
F-A	I134800		B-22	ISI	-	-	-	-	-	-	-
F1.20B	RHU-23		GUIDE	AUG	-	-	-	-	-	-	-
2	RHR			OWN	-	-	-	-	-	-	-
				PRE	-	-	-	-	-	-	-
F-A	I135350		B-20A	ISI	-	-	-	-	-	-	-
F1.20B	PEN 140 ANCHOR (IN/OUT)		ANCHOR (IA)	AUG	-	-	-	-	-	-	-
2	RHR			OWN	-	-	-	-	-	-	-
				PRE	-	-	-	-	-	-	-
F-A	I140925	ISI/VT/VT-106	B-24	ISI	-	-	A	-	-	-	-
F1.20B	RHU-40		ANCHOR (IA)	AUG	-	-	-	-	-	-	-
2	RHR			OWN	-	-	-	-	-	-	-
				PRE	-	-	-	-	-	-	-
F-A	I140950	ISI/VT/VT-106	B-24	ISI	-	-	A	-	-	-	-
F1.20B	RHU-46		ANCHOR (IA)	AUG	-	-	-	-	-	-	-
2	RHR			OWN	-	-	-	-	-	-	-
				PRE	-	-	-	-	-	-	-
F-A	I147900		B-26	ISI	-	-	-	-	-	-	-
F1.20B	RHU-95		ANCHOR (IA)	AUG	-	-	-	-	-	-	-
2	RHR			OWN	-	-	-	-	-	-	-
				PRE	-	-	-	-	-	-	-
F-A	I148600		B-26	ISI	-	-	-	-	-	-	-
F1.20B	RHU-97		GUIDE	AUG	-	-	-	-	-	-	-
2	RHR			OWN	-	-	-	-	-	-	-
				PRE	-	-	-	-	-	-	-

Category, ItemNO, Class	Summary / CompID / System	Scope / Method / Procedure	Iso No. Comp. Desc. Code Case		Period 1 00	Period 1 02	Period 2 03	Period 2 05	Period 2 06	Period 3 08	Period 3 09
F-A	I151350		B-25	ISI	-	-	-	-	-	-	-
F1.20B	RHU-50		GUIDE	AUG	-	-	-	-	-	-	-
2	RHR			OWN	-	-	-	-	-	-	-
				PRE	-	-	-	-	-	-	-
F-A	I155200		B-27	ISI	-	-	-	-	-	-	-
F1.20B	RHU-107		ANCHOR (IA)	AUG	-	-	-	-	-	-	-
2	RHR			OWN	-	-	-	-	-	-	-
				PRE	-	-	-	-	-	-	-
F-A	I156000		B-27	ISI	-	-	-	-	-	-	-
F1.20B	RHU-105		GUIDE	AUG	-	-	-	-	-	-	-
2	RHR			OWN	-	-	-	-	-	-	-
				PRE	-	-	-	-	-	-	-
F-A	I161120		B-37	ISI	-	-	-	-	-	-	-
F1.20B	SIU-82		GUIDE	AUG	-	-	-	-	-	-	-
2	HPSI			OWN	-	-	-	-	-	-	-
				PRE	-	-	-	-	-	-	-
F-A	I161150		B-37	ISI	-	-	-	-	-	-	-
F1.20B	SIU-81		GUIDE	AUG	-	-	-	-	-	-	-
2	HPSI			OWN	-	-	-	-	-	-	-
				PRE	-	-	-	-	-	-	-
F-A	I161190		B-37	ISI	-	-	-	-	-	-	-
F1.20B	SIU-79		RIGID RESTRAINT (IA)	AUG	-	-	-	-	-	-	-
2	HPSI			OWN	-	-	-	-	-	-	-
				PRE	-	-	-	-	-	-	-
F-A	I161425		B-37	ISI	-	-	-	-	-	-	-
F1.20B	PEN 113 ANCHOR		ANCHOR (IA)	AUG	-	-	-	-	-	-	-
2	HPSI			OWN	-	-	-	-	-	-	-
				PRE	-	-	-	-	-	-	-
F-A	I161500		B-38	ISI	-	-	-	-	-	-	-
F1.20B	SIU-42		RIGID RESTRAINT	AUG	-	-	-	-	-	-	-
2	HPSI			OWN	-	-	-	-	-	-	-
				PRE	-	-	-	-	-	-	-
F-A	I161530		B-38	ISI	-	-	-	-	-	-	-
F1.20B	SIU-39		RIGID RESTRAINT (IA)	AUG	-	-	-	-	-	-	-
2	HPSI			OWN	-	-	-	-	-	-	-
				PRE	-	-	-	-	-	-	-
F-A	I161540		B-38	ISI	-	-	-	-	-	-	-
F1.20B	SIU-40		RIGID RESTRAINT	AUG	-	-	-	-	-	-	-
2	HPSI			OWN	-	-	-	-	-	-	-
				PRE	-	-	-	-	-	-	-

Category, ItemNO, Class	Summary / CompID / System	Scope / Method / Procedure	Iso No. Comp. Desc. Code Case		Period 1 00	Period 1 02	Period 2 03	Period 2 05	Period 2 06	Period 3 08	Period 3 09
F-A	I161630		B-38	ISI	-	-	-	-	-	-	-
F1.20B	SIU-38		RIGID RESTRAINT (IA)	AUG	-	-	-	-	-	-	-
2	HPSI			OWN	-	-	-	-	-	-	-
				PRE	-	-	-	-	-	-	-
F-A	I161750		B-39	ISI	-	-	-	-	-	-	-
F1.20B	SIU-33		GUIDE	AUG	-	-	-	-	-	-	-
2	HPSI			OWN	-	-	-	-	-	-	-
				PRE	-	-	-	-	-	-	-
F-A	I161830		B-39	ISI	-	-	-	-	-	-	-
F1.20B	SIU-34		U-BOLT	AUG	-	-	-	-	-	-	-
2	HPSI			OWN	-	-	-	-	-	-	-
				PRE	-	-	-	-	-	-	-
F-A	I161860		B-39	ISI	-	-	-	-	-	-	-
F1.20B	SIU-35		U-BOLT	AUG	-	-	-	-	-	-	-
2	HPSI			OWN	-	-	-	-	-	-	-
				PRE	-	-	-	-	-	-	-
F-A	I161890		B-39	ISI	-	-	-	-	-	-	-
F1.20B	SIU-36		U-BOLT	AUG	-	-	-	-	-	-	-
2	HPSI			OWN	-	-	-	-	-	-	-
				PRE	-	-	-	-	-	-	-
F-A	I161900	ISI/VT/VT-106	B-39	ISI	-	-	-	-	s	-	-
F1.20B	SIU-37		GUIDE	AUG	-	-	-	-	-	-	-
2	HPSI			OWN	-	-	-	-	-	-	-
				PRE	-	-	-	-	-	-	-
F-A	I162070		B-39	ISI	-	-	-	-	-	-	-
F1.20B	SIU-32		GUIDE	AUG	-	-	-	-	-	-	-
2	HPSI			OWN	-	-	-	-	-	-	-
				PRE	-	-	-	-	-	-	-
F-A	I162180		B-39	ISI	-	-	-	-	-	-	-
F1.20B	SIU-30		ANCHOR (IA)	AUG	-	-	-	-	-	-	-
2	HPSI			OWN	-	-	-	-	-	-	-
				PRE	-	-	-	-	-	-	-
F-A	I162570	ISI/VT/VT-106	B-40	ISI	c	-	-	-	-	-	-
F1.20B	SIU-93		GUIDE	AUG	-	-	-	-	-	-	-
2	HPSI			OWN	-	-	-	-	-	-	-
				PRE	-	-	-	-	-	-	-
F-A	I162610		B-40	ISI	-	-	-	-	-	-	-
F1.20B	SIU-91		GUIDE	AUG	-	-	-	-	-	-	-
2	HPSI			OWN	-	-	-	-	-	-	-
				PRE	-	-	-	-	-	-	-

Category, ItemNO, Class	Summary / CompID / System	Scope / Method / Procedure	Iso No. Comp. Desc. Code Case		Period 1 00	Period 1 02	Period 2 03	Period 2 05	Period 2 06	Period 3 08	Period 3 09
F-A	I162640		B-40	ISI	-	-	-	-	-	-	-
F1.20B	SIU-90		GUIDE (IA)	AUG	-	-	-	-	-	-	-
2	HPSI			OWN	-	-	-	-	-	-	-
				PRE	-	-	-	-	-	-	-
F-A	I162700		B-40	ISI	-	-	-	-	-	-	-
F1.20B	SIU-88		GUIDE	AUG	-	-	-	-	-	-	-
2	HPSI			OWN	-	-	-	-	-	-	-
				PRE	-	-	-	-	-	-	-
F-A	I163270		B-41	ISI	-	-	-	-	-	-	-
F1.20B	SIU-70		GUIDE	AUG	-	-	-	-	-	-	-
2	HPSI			OWN	-	-	-	-	-	-	-
				PRE	-	-	-	-	-	-	-
F-A	I163650		B-42	ISI	-	-	-	-	-	-	-
F1.20B	SIU-65		GUIDE	AUG	-	-	-	-	-	-	-
2	HPSI			OWN	-	-	-	-	-	-	-
				PRE	-	-	-	-	-	-	-
F-A	I163680		B-42	ISI	-	-	-	-	-	-	-
F1.20B	SIU-64		GUIDE	AUG	-	-	-	-	-	-	-
2	HPSI			OWN	-	-	-	-	-	-	-
				PRE	-	-	-	-	-	-	-
F-A	I163720	ISI/VT/VT-106	B-42	ISI	-	-	-	-	-	s	-
F1.20B	SIU-62		GUIDE (IA)	AUG	-	-	-	-	-	-	-
2	HPSI			OWN	-	-	-	-	-	-	-
				PRE	-	-	-	-	-	-	-
F-A	I163780		B-42	ISI	-	-	-	-	-	-	-
F1.20B	SIU-60		RIGID SUPPORT	AUG	-	-	-	-	-	-	-
2	HPSI			OWN	-	-	-	-	-	-	-
				PRE	-	-	-	-	-	-	-
F-A	I163790		B-42	ISI	-	-	-	-	-	-	-
F1.20B	SIU-59		GUIDE	AUG	-	-	-	-	-	-	-
2	HPSI			OWN	-	-	-	-	-	-	-
				PRE	-	-	-	-	-	-	-
F-A	I163830	ISI/VT/VT-106	B-42	ISI	-	-	c	-	-	-	-
F1.20B	SIU-57		RIGID RESTRAINT	AUG	-	-	-	-	-	-	-
2	HPSI			OWN	-	-	-	-	-	-	-
				PRE	-	-	-	-	-	-	-
F-A	I163935		B-42	ISI	-	-	-	-	-	-	-
F1.20B	PEN 101 ANCHOR		ANCHOR (IA)	AUG	-	-	-	-	-	-	-
2	HPSI			OWN	-	-	-	-	-	-	-
				PRE	-	-	-	-	-	-	-

Category, ItemNO, Class	Summary / CompID / System	Scope / Method / Procedure	Iso No. Comp. Desc. Code Case		Period 1 00	Period 1 02	Period 2 03	Period 2 05	Period 2 06	Period 3 08	Period 3 09
F-A	I164040		B-43	ISI	-	-	-	-	-	-	-
F1.20B	SIU-23		RIGID RESTRAINT	AUG	-	-	-	-	-	-	-
2	HPSI			OWN	-	-	-	-	-	-	-
				PRE	-	-	-	-	-	-	-
F-A	I164060		B-43	ISI	-	-	-	-	-	-	-
F1.20B	SIU-20		RIGID RESTRAINT	AUG	-	-	-	-	-	-	-
2	HPSI			OWN	-	-	-	-	-	-	-
				PRE	-	-	-	-	-	-	-
F-A	I164150		B-43	ISI	-	-	-	-	-	-	-
F1.20B	SIU-17		RIGID RESTRAINT	AUG	-	-	-	-	-	-	-
2	HPSI			OWN	-	-	-	-	-	-	-
				PRE	-	-	-	-	-	-	-
F-A	I164200		B-43	ISI	-	-	-	-	-	-	-
F1.20B	SIU-15		GUIDE	AUG	-	-	-	-	-	-	-
2	HPSI			OWN	-	-	-	-	-	-	-
				PRE	-	-	-	-	-	-	-
F-A	I164590		B-44	ISI	-	-	-	-	-	-	-
F1.20B	SIU-10		GUIDE	AUG	-	-	-	-	-	-	-
2	HPSI			OWN	-	-	-	-	-	-	-
				PRE	-	-	-	-	-	-	-
F-A	I164670	ISI/VT/VT-106	B-44	ISI	-	-	c	-	-	-	-
F1.20B	SIU-26		ANCHOR (IA)	AUG	-	-	-	-	-	-	-
2	HPSI			OWN	-	-	-	-	-	-	-
				PRE	-	-	-	-	-	-	-
F-A	I164870		B-45	ISI	-	-	-	-	-	-	-
F1.20B	SIU-9		GUIDE	AUG	-	-	-	-	-	-	-
2	HPSI			OWN	-	-	-	-	-	-	-
				PRE	-	-	-	-	-	-	-
F-A	I079500		B-8	ISI	-	-	-	-	-	-	-
F1.20C	MSU-1		VARIABLE SPRING	AUG	-	-	-	-	-	-	-
2	MS			OWN	-	-	-	-	-	-	-
				PRE	-	-	-	-	-	-	-
F-A	I079600		B-8	ISI	-	-	-	-	-	-	-
F1.20C	MSU-2		MECHANICAL SNUBBER	AUG	-	-	-	-	-	-	-
2	MS			OWN	-	-	-	-	-	-	-
				PRE	-	-	-	-	-	-	-
F-A	I079700		B-8	ISI	-	-	-	-	-	-	-
F1.20C	MSU-3		MECHANICAL SNUBBER (IA)	AUG	-	-	-	-	-	-	-
2	MS			OWN	-	-	-	-	-	-	-
				PRE	-	-	-	-	-	-	-

Category, ItemNO, Class	Summary / CompID / System	Scope / Method / Procedure	Iso No. Comp. Desc. Code Case		Period 1 00	Period 1 02	Period 2 03	Period 2 05	Period 2 06	Period 3 08	Period 3 09
F-A	I080000		B-8	ISI	-	-	-	-	-	-	-
F1.20C	MSU-4		VARIABLE SPRING	AUG	-	-	-	-	-	-	-
2	MS			OWN	-	-	-	-	-	-	-
				PRE	-	-	-	-	-	-	-
F-A	I080100		B-8	ISI	-	-	-	-	-	-	-
F1.20C	MSU-5		VARIABLE SPRING	AUG	-	-	-	-	-	-	-
2	MS			OWN	-	-	-	-	-	-	-
				PRE	-	-	-	-	-	-	-
F-A	I080800	ISI/VT/VT-106	B-9	ISI	E	-	-	-	-	-	-
F1.20C	MSU-46		VARIABLE SPRING	AUG	-	-	-	-	-	-	-
2	MS			OWN	-	-	-	-	-	-	-
				PRE	-	-	-	-	-	-	-
F-A	I080900	ISI/VT/VT-106	B-9	ISI	E	-	-	-	-	-	s
F1.20C	MSU-45		VARIABLE SPRING	AUG	-	-	-	-	-	-	-
2	MS			OWN	-	-	-	-	-	-	-
				PRE	-	-	-	-	-	-	-
F-A	I081300	ISI/VT/VT-106	B-9	ISI	-	c	-	-	-	-	-
F1.20C	MSU-44		MECHANICAL SNUBBER (IA)	AUG	-	-	-	-	-	-	-
2	MS			OWN	-	-	-	-	-	-	-
				PRE	-	-	-	-	-	-	-
F-A	I081600	ISI/VT/VT-106	B-9	ISI	E	-	-	-	-	-	-
F1.20C	MSU-42		VARIABLE SPRING	AUG	-	-	-	-	-	-	-
2	MS			OWN	-	-	-	-	-	-	-
				PRE	-	-	-	-	-	-	-
F-A	I082000	ISI/VT/VT-106	B-9	ISI	-	-	-	-	-	s	-
F1.20C	MSU-41		VARIABLE SPRING (IA)	AUG	-	-	-	-	-	-	-
2	MS			OWN	-	-	-	-	-	-	-
				PRE	-	-	-	-	-	-	-
F-A	I082025		B-9	ISI	-	-	-	-	-	-	-
F1.20C	MSU-40		MECHANICAL SNUBBER (IA)	AUG	-	-	-	-	-	-	-
2	MS			OWN	-	-	-	-	-	-	-
				PRE	-	-	-	-	-	-	-
F-A	I082050		B-9	ISI	-	-	-	-	-	-	-
F1.20C	MSU-39		MECHANICAL SNUBBER (IA)	AUG	-	-	-	-	-	-	-
2	MS			OWN	-	-	-	-	-	-	-
				PRE	-	-	-	-	-	-	-
F-A	I082500		B-9A	ISI	-	-	-	-	-	-	-
F1.20C	MSU-38		MECHANICAL SNUBBER (IA)	AUG	-	-	-	-	-	-	-
2	MS			OWN	-	-	-	-	-	-	-
				PRE	-	-	-	-	-	-	-

Category, ItemNO, Class	Summary / CompID / System	Scope / Method / Procedure	Iso No. Comp. Desc. Code Case		Period 1 00	Period 1 02	Period 2 03	Period 2 05	Period 2 06	Period 3 08	Period 3 09
F-A	I084320		B-9A	ISI	-	-	-	-	-	-	-
F1.20C	MSU-58		MECHANICAL SNUBBER	AUG	-	-	-	-	-	-	-
2	MS			OWN	-	-	-	-	-	-	-
				PRE	-	-	-	-	-	-	-
F-A	I084700		B-8	ISI	-	-	-	-	-	-	-
F1.20C	MSU-6		VARIABLE SPRING	AUG	-	-	-	-	-	-	-
2	MS			OWN	-	-	-	-	-	-	-
				PRE	-	-	-	-	-	-	-
F-A	I084900	ISI/VT/VT-106	B-8	ISI	-	-	-	-	-	s	-
F1.20C	MSU-7		MECHANICAL SNUBBER	AUG	-	-	-	-	-	-	-
2	MS			OWN	-	-	-	-	-	-	-
				PRE	-	-	-	-	-	-	-
F-A	I085200		B-8	ISI	-	-	-	-	-	-	-
F1.20C	MSU-8		HYDRAULIC SNUBBER	AUG	-	-	-	-	-	-	-
2	MS			OWN	-	-	-	-	-	-	-
				PRE	-	-	-	-	-	-	-
F-A	I085300		B-8	ISI	-	-	-	-	-	-	-
F1.20C	MSU-9		VARIABLE SPRING	AUG	-	-	-	-	-	-	-
2	MS			OWN	-	-	-	-	-	-	-
				PRE	-	-	-	-	-	-	-
F-A	I085400		B-8	ISI	-	-	-	-	-	-	-
F1.20C	MSU-10		VARIABLE SPRING	AUG	-	-	-	-	-	-	-
2	MS			OWN	-	-	-	-	-	-	-
				PRE	-	-	-	-	-	-	-
F-A	I086325	ISI/VT/VT-106	B-10A	ISI	E	-	-	-	-	-	-
F1.20C	MSU-12		MECHANICAL SNUBBER (IA)	AUG	-	-	-	-	-	-	-
2	MS			OWN	-	-	-	-	-	-	-
				PRE	-	-	-	-	-	-	-
F-A	I086525	ISI/VT/VT-106	B-10A	ISI	E	-	-	-	-	-	-
F1.20C	MSU-13		MECHANICAL SNUBBER (IA)	AUG	-	-	-	-	-	-	-
2	MS			OWN	-	-	-	-	-	-	-
				PRE	-	-	-	-	-	-	-
F-A	I086800	ISI/VT/VT-106	B-10A	ISI	-	c	-	-	-	-	-
F1.20C	MSU-15		MECHANICAL SNUBBER (IA)	AUG	-	-	-	-	-	-	-
2	MS			OWN	-	-	-	-	-	-	-
				PRE	-	-	-	-	-	-	-
F-A	I086825		B-10A	ISI	-	-	-	-	-	-	-
F1.20C	MSU-16		MECHANICAL SNUBBER (IA)	AUG	-	-	-	-	-	-	-
2	MS			OWN	-	-	-	-	-	-	-
				PRE	-	-	-	-	-	-	-

Category, ItemNO, Class	Summary / CompID / System	Scope / Method / Procedure	Iso No. Comp. Desc. Code Case		Period 1 00	Period 1 02	Period 2 03	Period 2 05	Period 2 06	Period 3 08	Period 3 09
F-A	I086900	ISI/VT/VT-106	B-10A	ISI	E	-	-	-	-	-	-
F1.20C	MSU-17	OWN//	VARIABLE SPRING	AUG	-	-	-	-	-	-	-
2	MS			OWN	-	-	-	-	s	-	-
				PRE	-	-	-	-	-	-	-
F-A	I087100	ISI/VT/VT-106	B-10A	ISI	E	-	-	-	-	-	-
F1.20C	MSU-18		MECHANICAL SNUBBER (IA)	AUG	-	-	-	-	-	-	-
2	MS			OWN	-	-	-	-	-	-	-
				PRE	-	-	-	-	-	-	-
F-A	I087125	ISI/VT/VT-106	B-10A	ISI	E	-	-	-	-	-	-
F1.20C	MSU-19		MECHANICAL SNUBBER (IA)	AUG	-	-	-	-	-	-	-
2	MS			OWN	-	-	-	-	-	-	-
				PRE	-	-	-	-	-	-	-
F-A	I087200	ISI/VT/VT-106	B-10A	ISI	E	E	-	-	-	-	-
F1.20C	MSU-20		VARIABLE SPRING	AUG	-	-	-	-	-	-	-
2	MS			OWN	-	-	-	-	-	-	-
				PRE	-	-	-	-	-	-	-
F-A	I087425	ISI/VT/VT-106	B-10A	ISI	E	-	-	-	-	-	-
F1.20C	MSU-22		MECHANICAL SNUBBER (IA)	AUG	-	-	-	-	-	-	-
2	MS			OWN	-	-	-	-	-	-	-
				PRE	-	-	-	-	-	-	-
F-A	I087500	PSI/VT/VT-106	B-10A	ISI	-	-	-	h	-	-	-
F1.20C	MSU-23	ISI/VT/VT-106	VARIABLE SPRING	AUG	-	-	-	-	-	-	-
2	MS	PSI/VT/VT-106		OWN	-	-	-	-	-	-	-
				PRE	-	c	B	-	-	-	-
F-A	I087625	ISI/VT/VT-106	B-10A	ISI	E	-	-	-	-	-	-
F1.20C	MSU-25		MECHANICAL SNUBBER (IA)	AUG	-	-	-	-	-	-	-
2	MS			OWN	-	-	-	-	-	-	-
				PRE	-	-	-	-	-	-	-
F-A	I087650	PSI/VT/VT-106	B-10A	ISI	-	-	-	-	-	-	-
F1.20C	MSU-26		MECHANICAL SNUBBER (IA)	AUG	-	-	-	-	-	-	-
2	MS			OWN	-	-	-	-	-	-	-
				PRE	c	-	-	-	-	-	-
F-A	I088000	ISI/VT/VT-106	B-10A	ISI	E	-	-	-	-	-	-
F1.20C	MSU-27		MECHANICAL SNUBBER (IA)	AUG	-	-	-	-	-	-	-
2	MS			OWN	-	-	-	-	-	-	-
				PRE	-	-	-	-	-	-	-
F-A	I088100	ISI/VT/VT-106	B-10A	ISI	E	-	-	-	-	-	-
F1.20C	MSU-28		VARIABLE SPRING	AUG	-	-	-	-	-	-	-
2	MS			OWN	-	-	-	-	-	-	-
				PRE	-	-	-	-	-	-	-

Category, ItemNO, Class	Summary / CompID / System	Scope / Method / Procedure	Iso No. Comp. Desc. Code Case		Period 1 00	Period 1 02	Period 2 03	Period 2 05	Period 2 06	Period 3 08	Period 3 09
F-A	I088125	ISI/VT/VT-106	B-10A	ISI	E	c	-	-	-	-	-
F1.20C	MSU-29	ISI/VT/VT-106	MECHANICAL SNUBBER (IA)	AUG	-	-	-	-	-	-	-
2	MS			OWN	-	-	-	-	-	-	-
				PRE	-	-	-	-	-	-	-
F-A	I088200	ISI/VT/VT-106	B-10A	ISI	E	-	-	-	-	-	-
F1.20C	MSU-30		VARIABLE SPRING	AUG	-	-	-	-	-	-	-
2	MS			OWN	-	-	-	-	-	-	-
				PRE	-	-	-	-	-	-	-
F-A	I088300	ISI/VT/VT-106	B-10A	ISI	E	-	-	-	-	-	-
F1.20C	MSU-31		MECHANICAL SNUBBER (IA)	AUG	-	-	-	-	-	-	-
2	MS			OWN	-	-	-	-	-	-	-
				PRE	-	-	-	-	-	-	-
F-A	I088820		B-10	ISI	-	-	-	-	-	-	-
F1.20C	MSU-32		MECHANICAL SNUBBER (IA)	AUG	-	-	-	-	-	-	-
2	MS			OWN	-	-	-	-	-	-	-
				PRE	-	-	-	-	-	-	-
F-A	I090420	ISI/VT/VT-106	B-10	ISI	-	-	c	-	-	-	-
F1.20C	MSU-57		MECHANICAL SNUBBER	AUG	-	-	-	-	-	-	-
2	MS			OWN	-	-	-	-	-	-	-
				PRE	-	-	-	-	-	-	-
F-A	I090820		B-10	ISI	-	-	-	-	-	-	-
F1.20C	MSU-55		MECHANICAL SNUBBER	AUG	-	-	-	-	-	-	-
2	MS			OWN	-	-	-	-	-	-	-
				PRE	-	-	-	-	-	-	-
F-A	I091225		B-11	ISI	-	-	-	-	-	-	-
F1.20C	FWU-15		MECHANICAL SNUBBER (IA)	AUG	-	-	-	-	-	-	-
2	FW			OWN	-	-	-	-	-	-	-
				PRE	-	-	-	-	-	-	-
F-A	I092300	ISI/VT/VT-106	B-12	ISI	-	-	-	-	s	-	-
F1.20C	FWU-6		VARIABLE SPRING	AUG	-	-	-	-	-	-	-
2	FW			OWN	-	-	-	-	-	-	-
				PRE	-	-	-	-	-	-	-
F-A	I092450		B-12	ISI	-	-	-	-	-	-	-
F1.20C	FWU-5		HYDRAULIC SNUBBER (IA)	AUG	-	-	-	-	-	-	-
2	FW			OWN	-	-	-	-	-	-	-
				PRE	-	-	-	-	-	-	-
F-A	I092600		B-12	ISI	-	-	-	-	-	-	-
F1.20C	FWU-4		VARIABLE SPRING	AUG	-	-	-	-	-	-	-
2	FW			OWN	-	-	-	-	-	-	-
				PRE	-	-	-	-	-	-	-

Category, ItemNO, Class	Summary / CompID / System	Scope / Method / Procedure	Iso No. Comp. Desc. Code Case		Period 1 00	Period 1 02	Period 2 03	Period 2 05	Period 2 06	Period 3 08	Period 3 09
F-A	I092900		B-12	ISI	-	-	-	-	-	-	-
F1.20C	FWU-3		HYDRAULIC SNUBBER	AUG	-	-	-	-	-	-	-
2	FW			OWN	-	-	-	-	-	-	-
				PRE	-	-	-	-	-	-	-
F-A	I093100		B-12	ISI	-	-	-	-	-	-	-
F1.20C	FWU-2		VARIABLE SPRING	AUG	-	-	-	-	-	-	-
2	FW			OWN	-	-	-	-	-	-	-
				PRE	-	-	-	-	-	-	-
F-A	I093500		B-12	ISI	-	-	-	-	-	-	-
F1.20C	FWU-1		VARIABLE SPRING (IA)	AUG	-	-	-	-	-	-	-
2	FW			OWN	-	-	-	-	-	-	-
				PRE	-	-	-	-	-	-	-
F-A	I094575	PSI/VT/VT-106	B-14	ISI	-	-	-	-	-	-	-
F1.20C	FWU-41	PSI/VT/VT-106	VARIABLE SPRING	AUG	-	-	-	-	-	-	-
2	FW			OWN	-	-	-	-	-	-	-
				PRE	-	c	B	-	-	-	-
F-A	I094825		B-14	ISI	-	-	-	-	-	-	-
F1.20C	FWU-42		MECHANICAL SNUBBER (IA)	AUG	-	-	-	-	-	-	-
2	FW			OWN	-	-	-	-	-	-	-
				PRE	-	-	-	-	-	-	-
F-A	I094900	ISI/VT/VT-106	B-14	ISI	-	-	c	-	-	-	-
F1.20C	FWU-44	ISI/VT/VT-106	HYDRAULIC SNUBBER	AUG	-	-	-	-	-	-	-
2	FW			OWN	-	-	-	-	-	-	-
				PRE	-	-	-	-	-	-	-
F-A	I095400		B-14	ISI	-	-	-	-	-	-	-
F1.20C	FWU-47		MECHANICAL SNUBBER	AUG	-	-	-	-	-	-	-
2	FW			OWN	-	-	-	-	-	-	-
				PRE	-	-	-	-	-	-	-
F-A	I095800		B-14	ISI	-	-	-	-	-	-	-
F1.20C	FWU-48		MECHANICAL SNUBBER	AUG	-	-	-	-	-	-	-
2	FW			OWN	-	-	-	-	-	-	-
				PRE	-	-	-	-	-	-	-
F-A	I096300		B-14	ISI	-	-	-	-	-	-	-
F1.20C	FWU-51		MECHANICAL SNUBBER (IA)	AUG	-	-	-	-	-	-	-
2	FW			OWN	-	-	-	-	-	-	-
				PRE	-	-	-	-	-	-	-
F-A	I096325		B-14	ISI	-	-	-	-	-	-	-
F1.20C	FWU-52		MECHANICAL SNUBBER	AUG	-	-	-	-	-	-	-
2	FW			OWN	-	-	-	-	-	-	-
				PRE	-	-	-	-	-	-	-

Category, ItemNO, Class	Summary / CompID / System	Scope / Method / Procedure	Iso No. Comp. Desc. Code Case		Period 1 00	Period 1 02	Period 2 03	Period 2 05	Period 2 06	Period 3 08	Period 3 09
F-A	I096525		B-14	ISI	-	-	-	-	-	-	-
F1.20C	FWU-54		MECHANICAL SNUBBER	AUG	-	-	-	-	-	-	-
2	FW			OWN	-	-	-	-	-	-	-
				PRE	-	-	-	-	-	-	-
F-A	I096825	ISI/VT/VT-106	B-14	ISI	-	-	c	-	-	-	-
F1.20C	FWU-57		MECHANICAL SNUBBER	AUG	-	-	-	-	-	-	-
2	FW			OWN	-	-	-	-	-	-	-
				PRE	-	-	-	-	-	-	-
F-A	I097700	ISI/VT/VT-106	B-13	ISI	-	-	-	-	-	-	s
F1.20C	FWU-13		VARIABLE SPRING (IA)	AUG	-	-	-	-	-	-	-
2	FW			OWN	-	-	-	-	-	-	-
				PRE	-	-	-	-	-	-	-
F-A	I098025		B-13	ISI	-	-	-	-	-	-	-
F1.20C	FWU-12		MECHANICAL SNUBBER	AUG	-	-	-	-	-	-	-
2	FW			OWN	-	-	-	-	-	-	-
				PRE	-	-	-	-	-	-	-
F-A	I098100		B-13	ISI	-	-	-	-	-	-	-
F1.20C	FWU-11		VARIABLE SPRING	AUG	-	-	-	-	-	-	-
2	FW			OWN	-	-	-	-	-	-	-
				PRE	-	-	-	-	-	-	-
F-A	I098600		B-13	ISI	-	-	-	-	-	-	-
F1.20C	FWU-10		VARIABLE SPRING	AUG	-	-	-	-	-	-	-
2	FW			OWN	-	-	-	-	-	-	-
				PRE	-	-	-	-	-	-	-
F-A	I098825		B-13	ISI	-	-	-	-	-	-	-
F1.20C	FWU-9		VARIABLE SPRING	AUG	-	-	-	-	-	-	-
2	FW			OWN	-	-	-	-	-	-	-
				PRE	-	-	-	-	-	-	-
F-A	I098850		B-13	ISI	-	-	-	-	-	-	-
F1.20C	FWU-8		MECHANICAL SNUBBER	AUG	-	-	-	-	-	-	-
2	FW			OWN	-	-	-	-	-	-	-
				PRE	-	-	-	-	-	-	-
F-A	I099000		B-13	ISI	-	-	-	-	-	-	-
F1.20C	FWU-7		VARIABLE SPRING (IA)	AUG	-	-	-	-	-	-	-
2	FW			OWN	-	-	-	-	-	-	-
				PRE	-	-	-	-	-	-	-
F-A	I108710	ISI/VT/VT-106	B-17	ISI	-	-	c	-	-	-	-
F1.20C	RHU-1		VARIABLE SPRING	AUG	-	-	-	-	-	-	-
2	RHR			OWN	-	-	-	-	-	-	-
				PRE	-	-	-	-	-	-	-

Category, ItemNO, Class	Summary / CompID / System	Scope / Method / Procedure	Iso No. Comp. Desc. Code Case		Period 1 00	Period 1 02	Period 2 03	Period 2 05	Period 2 06	Period 3 08	Period 3 09
F-A	I110300		B-17	ISI	-	-	-	-	-	-	-
F1.20C	RHU-7		VARIABLE SPRING	AUG	-	-	-	-	-	-	-
2	RHR			OWN	-	-	-	-	-	-	-
				PRE	-	-	-	-	-	-	-
F-A	I110525		B-17	ISI	-	-	-	-	-	-	-
F1.20C	RHU-8		MECHANICAL SNUBBER	AUG	-	-	-	-	-	-	-
2	RHR			OWN	-	-	-	-	-	-	-
				PRE	-	-	-	-	-	-	-
F-A	I111550		B-18	ISI	-	-	-	-	-	-	-
F1.20C	RHU-16		VARIABLE SPRING	AUG	-	-	-	-	-	-	-
2	RHR			OWN	-	-	-	-	-	-	-
				PRE	-	-	-	-	-	-	-
F-A	I121110		B-19	ISI	-	-	-	-	-	-	-
F1.20C	RHU-109		MECHANICAL SNUBBER	AUG	-	-	-	-	-	-	-
2	HPSI			OWN	-	-	-	-	-	-	-
				PRE	-	-	-	-	-	-	-
F-A	I121120		B-19	ISI	-	-	-	-	-	-	-
F1.20C	RHU-110		MECHANICAL SNUBBER	AUG	-	-	-	-	-	-	-
2	HPSI			OWN	-	-	-	-	-	-	-
				PRE	-	-	-	-	-	-	-
F-A	I124700		B-19	ISI	-	-	-	-	-	-	-
F1.20C	RHU-122		VARIABLE SPRING	AUG	-	-	-	-	-	-	-
2	HPSI			OWN	-	-	-	-	-	-	-
				PRE	-	-	-	-	-	-	-
F-A	I125150		B-19	ISI	-	-	-	-	-	-	-
F1.20C	RHU-123		MECHANICAL SNUBBER	AUG	-	-	-	-	-	-	-
2	HPSI			OWN	-	-	-	-	-	-	-
				PRE	-	-	-	-	-	-	-
F-A	I131200	ISI/VT/VT-106	B-20	ISI	-	H	E	-	-	-	-
F1.20C	RHU-76	ISI/VT/VT-106	VARIABLE SPRING (IA)	AUG	-	-	-	-	-	-	-
2	RHR			OWN	-	-	-	-	-	-	-
				PRE	-	-	-	-	-	-	-
F-A	I131710	PSI/VT/VT-106	B-20	ISI	-	-	-	-	-	h	-
F1.20C	RHU-75	ISI/VT/VT-106	MECHANICAL SNUBBER	AUG	-	-	-	-	-	-	-
2	RHR			OWN	-	-	-	-	-	-	-
				PRE	-	-	-	s	-	-	-
F-A	I132900	ISI/VT/VT-106	B-20	ISI	-	H	A	-	-	-	-
F1.20C	RHU-62	ISI/VT/VT-106	VARIABLE SPRING (IA)	AUG	-	-	-	-	-	-	-
2	RHR			OWN	-	-	-	-	-	-	-
				PRE	-	-	-	-	-	-	-

Category, ItemNO, Class	Summary / CompID / System	Scope / Method / Procedure	Iso No. Comp. Desc. Code Case		Period 1 00	Period 1 02	Period 2 03	Period 2 05	Period 2 06	Period 3 08	Period 3 09
F-A	I135500	ISI/VT/VT-106	B-20A	ISI	-	c	A	-	-	-	-
F1.20C	RHU-81	ISI/VT/VT-106	VARIABLE SPRING	AUG	-	-	-	-	-	-	-
2	RHR			OWN	-	-	-	-	-	-	-
				PRE	-	-	-	-	-	-	-
F-A	I136600	ISI/VT/VT-106	B-20	ISI	-	-	A	-	-	-	-
F1.20C	RHU-63		MECHANICAL SNUBBER	AUG	-	-	-	-	-	-	-
2	RHR			OWN	-	-	-	-	-	-	-
				PRE	-	-	-	-	-	-	-
F-A	I137100	PSI/VT/VT-106	B-20A	ISI	-	-	A	-	-	-	-
F1.20C	RHU-67	ISI/VT/VT-106	VARIABLE SPRING	AUG	-	-	-	-	-	-	-
2	RHR			OWN	-	-	-	-	-	-	-
				PRE	-	-	c	-	-	-	-
F-A	I137800	ISI/VT/VT-106	B-20A	ISI	-	-	p	a	-	-	-
F1.20C	RHU-68	ISI/VT/VT-106	VARIABLE SPRING (IA)	AUG	-	-	-	-	-	-	-
2	RHR	ISI/VT/VT-106		OWN	-	-	-	-	-	-	-
				PRE	-	-	-	-	-	-	-
F-A	I138300	ISI/VT/VT-106	B-20A	ISI	-	c	A	-	-	-	-
F1.20C	RHU-71	ISI/VT/VT-106	MECHANICAL SNUBBER	AUG	-	-	-	-	-	-	-
2	RHR			OWN	-	-	-	-	-	-	-
				PRE	-	-	-	-	-	-	-
F-A	I138400	ISI/VT/VT-106	B-20A	ISI	-	-	A	-	-	-	-
F1.20C	RHU-70		VARIABLE SPRING	AUG	-	-	-	-	-	-	-
2	RHR			OWN	-	-	-	-	-	-	-
				PRE	-	-	-	-	-	-	-
F-A	I138650	ISI/VT/VT-106	B-20A	ISI	-	-	A	-	-	-	-
F1.20C	RHU-69		MECHANICAL SNUBBER	AUG	-	-	-	-	-	-	-
2	RHR			OWN	-	-	-	-	-	-	-
				PRE	-	-	-	-	-	-	-
F-A	I139500	ISI/VT/VT-106	B-23	ISI	-	-	A	-	-	-	-
F1.20C	RHU-36		MECHANICAL SNUBBER	AUG	-	-	-	-	-	-	-
2	RHR			OWN	-	-	-	-	-	-	-
				PRE	-	-	-	-	-	-	-
F-A	I141400	ISI/VT/VT-106	B-25	ISI	-	-	A	-	-	-	-
F1.20C	RHU-47		VARIABLE SPRING	AUG	-	-	-	-	-	-	-
2	RHR			OWN	-	-	-	-	-	-	-
				PRE	-	-	-	-	-	-	-
F-A	I142210	ISI/VT/VT-106	B-23	ISI	-	-	A	-	-	h	-
F1.20C	RHU-41	PSI/VT/VT-106	VARIABLE SPRING	AUG	-	-	-	-	-	-	-
2	RHR	PSI/VT/VT-106		OWN	-	-	-	-	-	-	-
		ISI/VT/VT-106		PRE	-	-	c	b	-	-	-

Category, ItemNO, Class	Summary / CompID / System	Scope / Method / Procedure	Iso No. Comp. Desc. Code Case		Period 1 00	Period 1 02	Period 2 03	Period 2 05	Period 2 06	Period 3 08	Period 3 09
F-A	I143500	ISI/VT/VT-106	B-24	ISI	-	-	A	-	-	-	-
F1.20C	RHU-44		VARIABLE SPRING	AUG	-	-	-	-	-	-	-
2	RHR			OWN	-	-	-	-	-	-	-
				PRE	-	-	-	-	-	-	-
F-A	I146600	ISI/VT/VT-106	B-26	ISI	-	-	A	-	-	s	-
F1.20C	RHU-60	ISI/VT/VT-106	VARIABLE SPRING (IA)	AUG	-	-	-	-	-	-	-
2	RHR			OWN	-	-	-	-	-	-	-
				PRE	-	-	-	-	-	-	-
F-A	I146850		B-26	ISI	-	-	-	-	-	-	-
F1.20C	RHU-61		MECHANICAL SNUBBER	AUG	-	-	-	-	-	-	-
2	RHR			OWN	-	-	-	-	-	-	-
				PRE	-	-	-	-	-	-	-
F-A	I152300		B-25	ISI	-	-	-	-	-	-	-
F1.20C	RHU-51		MECHANICAL SNUBBER	AUG	-	-	-	-	-	-	-
2	RHR			OWN	-	-	-	-	-	-	-
				PRE	-	-	-	-	-	-	-
F-A	I152800		B-25	ISI	-	-	-	-	-	-	-
F1.20C	RHU-53		MECHANICAL SNUBBER	AUG	-	-	-	-	-	-	-
2	RHR			OWN	-	-	-	-	-	-	-
				PRE	-	-	-	-	-	-	-
F-A	I159900		B-19	ISI	-	-	-	-	-	-	-
F1.20C	RHU-129		VARIABLE SPRING (IA)	AUG	-	-	-	-	-	-	-
2	CS			OWN	-	-	-	-	-	-	-
				PRE	-	-	-	-	-	-	-
F-A	I160400	ISI/VT/VT-106	B-19	ISI	-	-	-	-	-	-	s
F1.20C	RHU-130		VARIABLE SPRING (IA)	AUG	-	-	-	-	-	-	-
2	CS			OWN	-	-	-	-	-	-	-
				PRE	-	-	-	-	-	-	-
F-A	I160750	ISI/VT/VT-106	B-16B	ISI	-	-	-	s	-	-	-
F1.20C	RHU-118		VARIABLE SPRING	AUG	-	-	-	-	-	-	-
2	HPSI			OWN	-	-	-	-	-	-	-
				PRE	-	-	-	-	-	-	-
F-A	I160780		B-16B	ISI	-	-	-	-	-	-	s
F1.20C	RHU-119		MECHANICAL SNUBBER	AUG	-	-	-	-	-	-	-
2	HPSI			OWN	-	-	-	-	-	-	-
				PRE	-	-	-	-	-	-	-
F-A	I161100		B-37	ISI	-	-	-	-	-	-	-
F1.20C	SIU-84		VARIABLE SPRING (IA)	AUG	-	-	-	-	-	-	-
2	HPSI			OWN	-	-	-	-	-	-	-
				PRE	-	-	-	-	-	-	-

Category, ItemNO, Class	Summary / CompID / System	Scope / Method / Procedure	Iso No. Comp. Desc. Code Case		Period 1 00	Period 1 02	Period 2 03	Period 2 05	Period 2 06	Period 3 08	Period 3 09
F-A	I161390		B-37	ISI	-	-	-	-	-	-	-
F1.20C	SIU-72		VARIABLE SPRING (IA)	AUG	-	-	-	-	-	-	-
2	HPSI			OWN	-	-	-	-	-	-	-
				PRE	-	-	-	-	-	-	-
F-A	I162540		B-40	ISI	-	-	-	-	-	-	s
F1.20C	SIU-95		VARIABLE SPRING (IA)	AUG	-	-	-	-	-	-	-
2	HPSI			OWN	-	-	-	-	-	-	-
				PRE	-	-	-	-	-	-	-
F-A	I163590		B-42	ISI	-	-	-	-	-	-	-
F1.20C	SIU-68		VARIABLE SPRING (IA)	AUG	-	-	-	-	-	-	-
2	HPSI			OWN	-	-	-	-	-	-	-
				PRE	-	-	-	-	-	-	-
F-A	I163900		B-42	ISI	-	-	-	-	-	-	-
F1.20C	SIU-56		VARIABLE SPRING (IA)	AUG	-	-	-	-	-	-	-
2	HPSI			OWN	-	-	-	-	-	-	-
				PRE	-	-	-	-	-	-	-
F-A	I164030		B-43	ISI	-	-	-	-	-	-	-
F1.20C	SIU-22		VARIABLE SPRING	AUG	-	-	-	-	-	-	-
2	HPSI			OWN	-	-	-	-	-	-	-
				PRE	-	-	-	-	-	-	-
F-A	I164090		B-43	ISI	-	-	-	-	-	-	-
F1.20C	SIU-18		VARIABLE SPRING	AUG	-	-	-	-	-	-	-
2	HPSI			OWN	-	-	-	-	-	-	-
				PRE	-	-	-	-	-	-	-
F-A	I164260		B-43	ISI	-	-	-	-	-	-	-
F1.20C	SIU-13		VARIABLE SPRING	AUG	-	-	-	-	-	-	-
2	HPSI			OWN	-	-	-	-	-	-	-
				PRE	-	-	-	-	-	-	-
F-A	I164320		B-43	ISI	-	-	-	-	-	-	-
F1.20C	SIU-11		VARIABLE SPRING	AUG	-	-	-	-	-	-	-
2	HPSI			OWN	-	-	-	-	-	-	-
				PRE	-	-	-	-	-	-	-
F-A	I509130		B-10	ISI	-	-	-	-	-	-	-
F1.20C	MSU-75		MECHANICAL SNUBBER	AUG	-	-	-	-	-	-	-
2	MS			OWN	-	-	-	-	-	-	-
				PRE	-	-	-	-	-	-	-
F-A	I509230		B-9A	ISI	-	-	-	-	-	-	-
F1.20C	MSU-85		MECHANICAL SNUBBER	AUG	-	-	-	-	-	-	-
2	MS			OWN	-	-	-	-	-	-	-
				PRE	-	-	-	-	-	-	-

Category, ItemNO, Class	Summary / CompID / System	Scope / Method / Procedure	Iso No. Comp. Desc. Code Case		Period 1 00	Period 1 02	Period 2 03	Period 2 05	Period 2 06	Period 3 08	Period 3 09
F-A	I500105	ISI/VT/VT-106	C-39	ISI	-	-	-	s	-	-	-
F1.30A	DGIN-1A		RIGID SUPPORT (IA)	AUG	-	-	-	-	-	-	-
3	DG			OWN	-	-	-	-	-	-	-
				PRE	-	-	-	-	-	-	-
F-A	I500115		C-40	ISI	-	-	-	-	-	-	-
F1.30A	DGIN-1B		RIGID SUPPORT (IA)	AUG	-	-	-	-	-	-	-
3	DG			OWN	-	-	-	-	-	-	-
				PRE	-	-	-	-	-	-	-
F-A	I500125		C-35	ISI	-	-	-	-	-	-	-
F1.30A	DG-1A		RIGID SUPPORT (IA)	AUG	-	-	-	-	-	-	-
3	DG			OWN	-	-	-	-	-	-	-
				PRE	-	-	-	-	-	-	-
F-A	I500135		C-35	ISI	-	-	-	-	-	-	-
F1.30A	DG-2A		RIGID SUPPORT (IA)	AUG	-	-	-	-	-	-	-
3	DG			OWN	-	-	-	-	-	-	-
				PRE	-	-	-	-	-	-	-
F-A	I500145		C-36	ISI	-	-	-	-	-	-	-
F1.30A	DG-1B		RIGID SUPPORT (IA)	AUG	-	-	-	-	-	-	-
3	DG			OWN	-	-	-	-	-	-	-
				PRE	-	-	-	-	-	-	-
F-A	I500155		C-36	ISI	-	-	-	-	-	-	-
F1.30A	DG-2B		RIGID SUPPORT (IA)	AUG	-	-	-	-	-	-	-
3	DG			OWN	-	-	-	-	-	-	-
				PRE	-	-	-	-	-	-	-
F-A	I500205		C-2	ISI	-	-	-	-	-	-	-
F1.30A	CCU-86		RIGID SUPPORT (IA)	AUG	-	-	-	-	-	-	-
3	AC			OWN	-	-	-	-	-	-	-
				PRE	-	-	-	-	-	-	-
F-A	I500210		C-2	ISI	-	-	-	-	-	-	-
F1.30A	CCU-87		RIGID RESTRAINT	AUG	-	-	-	-	-	-	-
3	AC			OWN	-	-	-	-	-	-	-
				PRE	-	-	-	-	-	-	-
F-A	I500220		C-2	ISI	-	-	-	-	-	-	-
F1.30A	CCU-88		GUIDE	AUG	-	-	-	-	-	-	-
3	AC			OWN	-	-	-	-	-	-	-
				PRE	-	-	-	-	-	-	-
F-A	I500235	ISI/VT/VT-106	C-2	ISI	c	-	-	-	-	-	-
F1.30A	CCU-89		RIGID SUPPORT (IA)	AUG	-	-	-	-	-	-	-
3	AC			OWN	-	-	-	-	-	-	-
				PRE	-	-	-	-	-	-	-

Category, ItemNO, Class	Summary / CompID / System	Scope / Method / Procedure	Iso No. Comp. Desc. Code Case		Period 1 00	Period 1 02	Period 2 03	Period 2 05	Period 2 06	Period 3 08	Period 3 09
F-A	I500305	ISI/VT/VT-106	C-3	ISI	-	c	-	-	-	-	-
F1.30A	CCU-102		RIGID HANGER (IA)	AUG	-	-	-	-	-	-	-
3	AC			OWN	-	-	-	-	-	-	-
				PRE	-	-	-	-	-	-	-
F-A	I500310		C-3	ISI	-	-	-	-	-	-	-
F1.30A	CCU-105		RIGID HANGER	AUG	-	-	-	-	-	-	-
3	AC			OWN	-	-	-	-	-	-	-
				PRE	-	-	-	-	-	-	-
F-A	I500320		C-3	ISI	-	-	-	-	-	-	-
F1.30A	CCU-106		RIGID RESTRAINT	AUG	-	-	-	-	-	-	-
3	AC			OWN	-	-	-	-	-	-	-
				PRE	-	-	-	-	-	-	-
F-A	I500335		C-3	ISI	-	-	-	-	-	-	-
F1.30A	CCU-107		RIGID RESTRAINT (IA)	AUG	-	-	-	-	-	-	-
3	AC			OWN	-	-	-	-	-	-	-
				PRE	-	-	-	-	-	-	-
F-A	I500340		C-3	ISI	-	-	-	-	-	-	-
F1.30A	CCU-108		RIGID HANGER	AUG	-	-	-	-	-	-	-
3	AC			OWN	-	-	-	-	-	-	-
				PRE	-	-	-	-	-	-	-
F-A	I500350		C-3	ISI	-	-	-	-	-	-	-
F1.30A	CCU-109		RIGID HANGER	AUG	-	-	-	-	-	-	-
3	AC			OWN	-	-	-	-	-	-	-
				PRE	-	-	-	-	-	-	-
F-A	I500360		C-3	ISI	-	-	-	-	-	-	-
F1.30A	CCU-110		RIGID HANGER	AUG	-	-	-	-	-	-	-
3	AC			OWN	-	-	-	-	-	-	-
				PRE	-	-	-	-	-	-	-
F-A	I500370		C-3	ISI	-	-	-	-	-	-	-
F1.30A	CCU-111		RIGID HANGER	AUG	-	-	-	-	-	-	-
3	AC			OWN	-	-	-	-	-	-	-
				PRE	-	-	-	-	-	-	-
F-A	I500390		C-3	ISI	-	-	-	-	-	-	-
F1.30A	CCU-172		GUIDE	AUG	-	-	-	-	-	-	-
3	AC			OWN	-	-	-	-	-	-	-
				PRE	-	-	-	-	-	-	-
F-A	I500400		C-3	ISI	-	-	-	-	-	-	-
F1.30A	CCU-173		RIGID RESTRAINT	AUG	-	-	-	-	-	-	-
3	AC			OWN	-	-	-	-	-	-	-
				PRE	-	-	-	-	-	-	-

Category, ItemNO, Class	Summary / CompID / System	Scope / Method / Procedure	Iso No. Comp. Desc. Code Case		Period 1 00	Period 1 02	Period 2 03	Period 2 05	Period 2 06	Period 3 08	Period 3 09
F-A	I500410		C-3	ISI	-	-	-	-	-	-	-
F1.30A	CCU-174		RIGID RESTRAINT	AUG	-	-	-	-	-	-	-
3	AC			OWN	-	-	-	-	-	-	-
				PRE	-	-	-	-	-	-	-
F-A	I500420		C-3	ISI	-	-	-	-	-	-	-
F1.30A	CCU-175		RIGID RESTRAINT	AUG	-	-	-	-	-	-	-
3	AC			OWN	-	-	-	-	-	-	-
				PRE	-	-	-	-	-	-	-
F-A	I500430		C-3	ISI	-	-	-	-	-	-	-
F1.30A	CCU-176		RIGID HANGER	AUG	-	-	-	-	-	-	-
3	AC			OWN	-	-	-	-	-	-	-
				PRE	-	-	-	-	-	-	-
F-A	I500450		C-3	ISI	-	-	-	-	-	-	-
F1.30A	CCU-178		RIGID RESTRAINT	AUG	-	-	-	-	-	-	-
3	AC			OWN	-	-	-	-	-	-	-
				PRE	-	-	-	-	-	-	-
F-A	I500500		C-4	ISI	-	-	-	-	-	-	-
F1.30A	CCU-135		RIGID RESTRAINT	AUG	-	-	-	-	-	-	-
3	AC			OWN	-	-	-	-	-	-	-
				PRE	-	-	-	-	-	-	-
F-A	I500510		C-4	ISI	-	-	-	-	-	-	-
F1.30A	CCU-136		RIGID RESTRAINT	AUG	-	-	-	-	-	-	-
3	AC			OWN	-	-	-	-	-	-	-
				PRE	-	-	-	-	-	-	-
F-A	I500525		C-4	ISI	-	-	-	-	-	-	-
F1.30A	CCU-137		RIGID RESTRAINT (IA)	AUG	-	-	-	-	-	-	-
3	AC			OWN	-	-	-	-	-	-	-
				PRE	-	-	-	-	-	-	-
F-A	I500570		C-4	ISI	-	-	-	-	-	-	-
F1.30A	CCU-142		RIGID RESTRAINT	AUG	-	-	-	-	-	-	-
3	AC			OWN	-	-	-	-	-	-	-
				PRE	-	-	-	-	-	-	-
F-A	I500580		C-4	ISI	-	-	-	-	-	-	-
F1.30A	CCU-143		RIGID RESTRAINT	AUG	-	-	-	-	-	-	-
3	AC			OWN	-	-	-	-	-	-	-
				PRE	-	-	-	-	-	-	-
F-A	I500600		C-4	ISI	-	-	-	-	-	-	-
F1.30A	CCU-145		GUIDE	AUG	-	-	-	-	-	-	-
3	AC			OWN	-	-	-	-	-	-	-
				PRE	-	-	-	-	-	-	-

Category, ItemNO, Class	Summary / CompID / System	Scope / Method / Procedure	Iso No. Comp. Desc. Code Case		Period 1 00	Period 1 02	Period 2 03	Period 2 05	Period 2 06	Period 3 08	Period 3 09
F-A	I500615		C-4	ISI	-	-	-	-	-	-	-
F1.30A	CCU-146		GUIDE (IA)	AUG	-	-	-	-	-	-	-
3	AC			OWN	-	-	-	-	-	-	-
				PRE	-	-	-	-	-	-	-
F-A	I500620		C-4	ISI	-	-	-	-	-	-	-
F1.30A	CCU-147		GUIDE	AUG	-	-	-	-	-	-	-
3	AC			OWN	-	-	-	-	-	-	-
				PRE	-	-	-	-	-	-	-
F-A	I500630		C-4	ISI	-	-	-	-	-	-	-
F1.30A	CCU-148		GUIDE	AUG	-	-	-	-	-	-	-
3	AC			OWN	-	-	-	-	-	-	-
				PRE	-	-	-	-	-	-	-
F-A	I500640		C-4	ISI	-	-	-	-	-	-	-
F1.30A	CCU-149		RIGID RESTRAINT	AUG	-	-	-	-	-	-	-
3	AC			OWN	-	-	-	-	-	-	-
				PRE	-	-	-	-	-	-	-
F-A	I500720		C-5	ISI	-	-	-	-	-	-	-
F1.30A	CCU-152		RIGID RESTRAINT	AUG	-	-	-	-	-	-	-
3	AC			OWN	-	-	-	-	-	-	-
				PRE	-	-	-	-	-	-	-
F-A	I500730		C-5	ISI	-	-	-	-	-	-	-
F1.30A	CCU-153		GUIDE	AUG	-	-	-	-	-	-	-
3	AC			OWN	-	-	-	-	-	-	-
				PRE	-	-	-	-	-	-	-
F-A	I500740		C-5	ISI	-	-	-	-	-	-	-
F1.30A	CCU-154		RIGID RESTRAINT	AUG	-	-	-	-	-	-	-
3	AC			OWN	-	-	-	-	-	-	-
				PRE	-	-	-	-	-	-	-
F-A	I500750		C-5	ISI	-	-	-	-	-	-	-
F1.30A	CCU-155		RIGID RESTRAINT	AUG	-	-	-	-	-	-	-
3	AC			OWN	-	-	-	-	-	-	-
				PRE	-	-	-	-	-	-	-
F-A	I500765	ISI/VT/VT-106	C-6	ISI	-	-	-	s	-	-	-
F1.30A	CCU-156		RIGID SUPPORT (IA)	AUG	-	-	-	-	-	-	-
3	AC			OWN	-	-	-	-	-	-	-
				PRE	-	-	-	-	-	-	-
F-A	I500780		C-6	ISI	-	-	-	-	-	-	-
F1.30A	CCU-159		RIGID RESTRAINT	AUG	-	-	-	-	-	-	-
3	AC			OWN	-	-	-	-	-	-	-
				PRE	-	-	-	-	-	-	-

Category, ItemNO, Class	Summary / CompID / System	Scope / Method / Procedure	Iso No. Comp. Desc. Code Case		Period 1 00	Period 1 02	Period 2 03	Period 2 05	Period 2 06	Period 3 08	Period 3 09
F-A	I500810		C-6	ISI	-	-	-	-	-	-	-
F1.30A	CCU-166		RIGID RESTRAINT	AUG	-	-	-	-	-	-	-
3	AC			OWN	-	-	-	-	-	-	-
				PRE	-	-	-	-	-	-	-
F-A	I500830		C-6	ISI	-	-	-	-	-	-	-
F1.30A	CCU-168		GUIDE	AUG	-	-	-	-	-	-	-
3	AC			OWN	-	-	-	-	-	-	-
				PRE	-	-	-	-	-	-	-
F-A	I500855	ISI/VT/VT-106	C-6	ISI	-	-	c	-	-	-	-
F1.30A	CCU-170		GUIDE (IA)	AUG	-	-	-	-	-	-	-
3	AC			OWN	-	-	-	-	-	-	-
				PRE	-	-	-	-	-	-	-
F-A	I500930		C-7	ISI	-	-	-	-	-	-	-
F1.30A	CCU-130		RIGID HANGER	AUG	-	-	-	-	-	-	-
3	AC			OWN	-	-	-	-	-	-	-
				PRE	-	-	-	-	-	-	-
F-A	I500940		C-7	ISI	-	-	-	-	-	-	-
F1.30A	CCU-131		RIGID HANGER	AUG	-	-	-	-	-	-	-
3	AC			OWN	-	-	-	-	-	-	-
				PRE	-	-	-	-	-	-	-
F-A	I500950		C-7	ISI	-	-	-	-	-	-	-
F1.30A	CCU-132		RIGID HANGER	AUG	-	-	-	-	-	-	-
3	AC			OWN	-	-	-	-	-	-	-
				PRE	-	-	-	-	-	-	-
F-A	I500965	ISI/VT/VT-106	C-7	ISI	-	-	-	s	-	-	-
F1.30A	CCU-218		RIGID HANGER (IA)	AUG	-	-	-	-	-	-	-
3	AC			OWN	-	-	-	-	-	-	-
				PRE	-	-	-	-	-	-	-
F-A	I500970		C-7	ISI	-	-	-	-	-	-	-
F1.30A	CCU-219		RIGID HANGER	AUG	-	-	-	-	-	-	-
3	AC			OWN	-	-	-	-	-	-	-
				PRE	-	-	-	-	-	-	-
F-A	I500980		C-7	ISI	-	-	-	-	-	-	-
F1.30A	CCU-220		RIGID HANGER	AUG	-	-	-	-	-	-	-
3	AC			OWN	-	-	-	-	-	-	-
				PRE	-	-	-	-	-	-	-
F-A	I500990		C-7	ISI	-	-	-	-	-	-	-
F1.30A	CCU-221		RIGID RESTRAINT	AUG	-	-	-	-	-	-	-
3	AC			OWN	-	-	-	-	-	-	-
				PRE	-	-	-	-	-	-	-

Category, ItemNO, Class	Summary / CompID / System	Scope / Method / Procedure	Iso No. Comp. Desc. Code Case		Period 1 00	Period 1 02	Period 2 03	Period 2 05	Period 2 06	Period 3 08	Period 3 09
F-A	I501020		C-7	ISI	-	-	-	-	-	-	-
F1.30A	CCU-163		RIGID RESTRAINT	AUG	-	-	-	-	-	-	-
3	AC			OWN	-	-	-	-	-	-	-
				PRE	-	-	-	-	-	-	-
F-A	I501100		C-5	ISI	-	-	-	-	-	-	-
F1.30A	CCU-227		RIGID RESTRAINT	AUG	-	-	-	-	-	-	-
3	AC			OWN	-	-	-	-	-	-	-
				PRE	-	-	-	-	-	-	-
F-A	I501115	ISI/VT/VT-106	C-5	ISI	-	-	c	-	-	-	-
F1.30A	CCU-228		GUIDE (IA)	AUG	-	-	-	-	-	-	-
3	AC			OWN	-	-	-	-	-	-	-
				PRE	-	-	-	-	-	-	-
F-A	I501120		C-5	ISI	-	-	-	-	-	-	-
F1.30A	CCU-229		RIGID RESTRAINT	AUG	-	-	-	-	-	-	-
3	AC			OWN	-	-	-	-	-	-	-
				PRE	-	-	-	-	-	-	-
F-A	I501140		C-5	ISI	-	-	-	-	-	-	-
F1.30A	CCU-231		RIGID HANGER	AUG	-	-	-	-	-	-	-
3	AC			OWN	-	-	-	-	-	-	-
				PRE	-	-	-	-	-	-	-
F-A	I501150		C-5	ISI	-	-	-	-	-	-	-
F1.30A	CCU-232		RIGID RESTRAINT	AUG	-	-	-	-	-	-	-
3	AC			OWN	-	-	-	-	-	-	-
				PRE	-	-	-	-	-	-	-
F-A	I501160		C-5	ISI	-	-	-	-	-	-	-
F1.30A	CCU-233		RIGID RESTRAINT	AUG	-	-	-	-	-	-	-
3	AC			OWN	-	-	-	-	-	-	-
				PRE	-	-	-	-	-	-	-
F-A	I501170		C-5	ISI	-	-	-	-	-	-	-
F1.30A	CCU-234		RIGID RESTRAINT	AUG	-	-	-	-	-	-	-
3	AC			OWN	-	-	-	-	-	-	-
				PRE	-	-	-	-	-	-	-
F-A	I501180		C-5	ISI	-	-	-	-	-	-	-
F1.30A	CCU-235		RIGID HANGER	AUG	-	-	-	-	-	-	-
3	AC			OWN	-	-	-	-	-	-	-
				PRE	-	-	-	-	-	-	-
F-A	I501190		C-5	ISI	-	-	-	-	-	-	-
F1.30A	CCU-236		RIGID RESTRAINT	AUG	-	-	-	-	-	-	-
3	AC			OWN	-	-	-	-	-	-	-
				PRE	-	-	-	-	-	-	-

Category, ItemNO, Class	Summary / CompID / System	Scope / Method / Procedure	Iso No. Comp. Desc. Code Case		Period 1 00	Period 1 02	Period 2 03	Period 2 05	Period 2 06	Period 3 08	Period 3 09
F-A	I501200		C-5	ISI	-	-	-	-	-	-	-
F1.30A	CCU-237		RIGID RESTRAINT	AUG	-	-	-	-	-	-	-
3	AC			OWN	-	-	-	-	-	-	-
				PRE	-	-	-	-	-	-	-
F-A	I501500		C-11	ISI	-	-	-	-	-	-	-
F1.30A	SWU-148		RIGID HANGER	AUG	-	-	-	-	-	-	-
3	SW			OWN	-	-	-	-	-	-	-
				PRE	-	-	-	-	-	-	-
F-A	I501510		C-11	ISI	-	-	-	-	-	-	-
F1.30A	SWU-149		RIGID HANGER	AUG	-	-	-	-	-	-	-
3	SW			OWN	-	-	-	-	-	-	-
				PRE	-	-	-	-	-	-	-
F-A	I501520		C-11	ISI	-	-	-	-	-	-	-
F1.30A	SWU-150		GUIDE	AUG	-	-	-	-	-	-	-
3	SW			OWN	-	-	-	-	-	-	-
				PRE	-	-	-	-	-	-	-
F-A	I501530		C-11	ISI	-	-	-	-	-	-	-
F1.30A	SWU-151		GUIDE	AUG	-	-	-	-	-	-	-
3	SW			OWN	-	-	-	-	-	-	-
				PRE	-	-	-	-	-	-	-
F-A	I501540		C-11	ISI	-	-	-	-	-	-	-
F1.30A	SWU-152		RIGID SUPPORT	AUG	-	-	-	-	-	-	-
3	SW			OWN	-	-	-	-	-	-	-
				PRE	-	-	-	-	-	-	-
F-A	I501550		C-11	ISI	-	-	-	-	-	-	-
F1.30A	SWU-153		U-BOLT	AUG	-	-	-	-	-	-	-
3	SW			OWN	-	-	-	-	-	-	-
				PRE	-	-	-	-	-	-	-
F-A	I501560		C-11	ISI	-	-	-	-	-	-	-
F1.30A	SWU-154		RIGID HANGER	AUG	-	-	-	-	-	-	-
3	SW			OWN	-	-	-	-	-	-	-
				PRE	-	-	-	-	-	-	-
F-A	I501570		C-11	ISI	-	-	-	-	-	-	-
F1.30A	SWU-155		U-BOLT	AUG	-	-	-	-	-	-	-
3	SW			OWN	-	-	-	-	-	-	-
				PRE	-	-	-	-	-	-	-
F-A	I501580		C-11	ISI	-	-	-	-	-	-	-
F1.30A	SWU-156		RIGID HANGER	AUG	-	-	-	-	-	-	-
3	SW			OWN	-	-	-	-	-	-	-
				PRE	-	-	-	-	-	-	-

Category, ItemNO, Class	Summary / CompID / System	Scope / Method / Procedure	Iso No. Comp. Desc. Code Case		Period 1 00	Period 1 02	Period 2 03	Period 2 05	Period 2 06	Period 3 08	Period 3 09
F-A	I501605	ISI/VT/VT-106	C-11	ISI	-	-	-	-	s	-	-
F1.30A	SWU-158		RIGID HANGER (IA)	AUG	-	-	-	-	-	-	-
3	SW			OWN	-	-	-	-	-	-	-
				PRE	-	-	-	-	-	-	-
F-A	I501620		C-11	ISI	-	-	-	-	-	-	-
F1.30A	SWU-160		RIGID RESTRAINT	AUG	-	-	-	-	-	-	-
3	SW			OWN	-	-	-	-	-	-	-
				PRE	-	-	-	-	-	-	-
F-A	I501895		C-12	ISI	-	-	-	-	-	-	-
F1.30A	SWU-193		RIGID HANGER (IA)	AUG	-	-	-	-	-	-	-
3	SW			OWN	-	-	-	-	-	-	-
				PRE	-	-	-	-	-	-	-
F-A	I501905	ISI/VT/VT-106	C-12	ISI	-	-	E	-	-	s	-
F1.30A	SWU-194	ISI/VT/VT-106	RIGID HANGER (IA)	AUG	-	-	-	-	-	-	-
3	SW			OWN	-	-	-	-	-	-	-
				PRE	-	-	-	-	-	-	-
F-A	I501925	ISI/VT/VT-106	C-12	ISI	-	-	E	-	-	-	-
F1.30A	SWU-196		RIGID SUPPORT (IA)	AUG	-	-	-	-	-	-	-
3	SW			OWN	-	-	-	-	-	-	-
				PRE	-	-	-	-	-	-	-
F-A	I501935	ISI/VT/VT-106	C-12	ISI	-	-	E	-	-	s	-
F1.30A	SWU-197	ISI/VT/VT-106	RIGID SUPPORT (IA)	AUG	-	-	-	-	-	-	-
3	SW			OWN	-	-	-	-	-	-	-
				PRE	-	-	-	-	-	-	-
F-A	I501945	ISI/VT/VT-106	C-12	ISI	-	-	E	-	-	s	-
F1.30A	SWU-198	ISI/VT/VT-106	RIGID SUPPORT (IA)	AUG	-	-	-	-	-	-	-
3	SW			OWN	-	-	-	-	-	-	-
				PRE	-	-	-	-	-	-	-
F-A	I501960		C-12	ISI	-	-	-	-	-	-	-
F1.30A	SWU-200		GUIDE	AUG	-	-	-	-	-	-	-
3	SW			OWN	-	-	-	-	-	-	-
				PRE	-	-	-	-	-	-	-
F-A	I501970		C-12	ISI	-	-	-	-	-	-	-
F1.30A	SWU-201		RIGID RESTRAINT	AUG	-	-	-	-	-	-	-
3	SW			OWN	-	-	-	-	-	-	-
				PRE	-	-	-	-	-	-	-
F-A	I502000		C-12	ISI	-	-	-	-	-	-	-
F1.30A	SWU-204		RIGID RESTRAINT	AUG	-	-	-	-	-	-	-
3	SW			OWN	-	-	-	-	-	-	-
				PRE	-	-	-	-	-	-	-

Category, ItemNO, Class	Summary / CompID / System	Scope / Method / Procedure	Iso No. Comp. Desc. Code Case		Period 1 00	Period 1 02	Period 2 03	Period 2 05	Period 2 06	Period 3 08	Period 3 09
F-A	I502010		C-12	ISI	-	-	-	-	-	-	-
F1.30A	SWU-205		RIGID RESTRAINT	AUG	-	-	-	-	-	-	-
3	SW			OWN	-	-	-	-	-	-	-
				PRE	-	-	-	-	-	-	-
F-A	I502020		C-12	ISI	-	-	-	-	-	-	-
F1.30A	SWU-206		RIGID HANGER	AUG	-	-	-	-	-	-	-
3	SW			OWN	-	-	-	-	-	-	-
				PRE	-	-	-	-	-	-	-
F-A	I502040	ISI/VT/VT-106	C-12	ISI	-	-	E	-	s	-	-
F1.30A	SWU-208	ISI/VT/VT-106	RIGID HANGER (IA)	AUG	-	-	-	-	-	-	-
3	SW			OWN	-	-	-	-	-	-	-
				PRE	-	-	-	-	-	-	-
F-A	I502050	OWN/VT/VT-106	C-12	ISI	-	-	-	-	-	h	-
F1.30A	SWU-209	ISI/VT/VT-106	RIGID HANGER	AUG	-	-	-	-	-	-	-
3	SW			OWN	-	-	c	-	-	-	-
				PRE	-	-	-	-	-	-	-
F-A	I502060	ISI/VT/VT-106	C-12	ISI	-	-	E	-	-	-	-
F1.30A	SWU-210		GUIDE	AUG	-	-	-	-	-	-	-
3	SW			OWN	-	-	-	-	-	-	-
				PRE	-	-	-	-	-	-	-
F-A	I502085		C-12	ISI	-	-	-	-	-	-	-
F1.30A	SWU-212		RIGID SUPPORT (IA)	AUG	-	-	-	-	-	-	-
3	SW			OWN	-	-	-	-	-	-	-
				PRE	-	-	-	-	-	-	-
F-A	I502095		C-12	ISI	-	-	-	-	-	-	-
F1.30A	SWU-213		RIGID SUPPORT (IA)	AUG	-	-	-	-	-	-	-
3	SW			OWN	-	-	-	-	-	-	-
				PRE	-	-	-	-	-	-	-
F-A	I502100		C-12	ISI	-	-	-	-	-	-	-
F1.30A	SWU-214		RIGID RESTRAINT	AUG	-	-	-	-	-	-	-
3	SW			OWN	-	-	-	-	-	-	-
				PRE	-	-	-	-	-	-	-
F-A	I502110		C-12	ISI	-	-	-	-	-	-	-
F1.30A	SWU-215		RIGID RESTRAINT	AUG	-	-	-	-	-	-	-
3	SW			OWN	-	-	-	-	-	-	-
				PRE	-	-	-	-	-	-	-
F-A	I502250		C-13	ISI	-	-	-	-	-	-	-
F1.30A	SWU-249		GUIDE	AUG	-	-	-	-	-	-	-
3	SW			OWN	-	-	-	-	-	-	-
				PRE	-	-	-	-	-	-	-

Category, ItemNO, Class	Summary / CompID / System	Scope / Method / Procedure	Iso No. Comp. Desc. Code Case		Period 1 00	Period 1 02	Period 2 03	Period 2 05	Period 2 06	Period 3 08	Period 3 09
F-A	I502275		C-13	ISI	-	-	-	-	-	-	-
F1.30A	SWU-251		RIGID SUPPORT (IA)	AUG	-	-	-	-	-	-	-
3	SW			OWN	-	-	-	-	-	-	-
				PRE	-	-	-	-	-	-	-
F-A	I502430		C-14	ISI	-	-	-	-	-	-	-
F1.30A	SWU-294		GUIDE	AUG	-	-	-	-	-	-	-
3	SW			OWN	-	-	-	-	-	-	-
				PRE	-	-	-	-	-	-	-
F-A	I502450		C-14	ISI	-	-	-	-	-	-	-
F1.30A	SWU-296		RIGID RESTRAINT	AUG	-	-	-	-	-	-	-
3	SW			OWN	-	-	-	-	-	-	-
				PRE	-	-	-	-	-	-	-
F-A	I502460		C-14	ISI	-	-	-	-	-	-	-
F1.30A	SWU-297		RIGID RESTRAINT	AUG	-	-	-	-	-	-	-
3	SW			OWN	-	-	-	-	-	-	-
				PRE	-	-	-	-	-	-	-
F-A	I502490		C-14	ISI	-	-	-	-	-	-	-
F1.30A	SWU-300		RIGID RESTRAINT	AUG	-	-	-	-	-	-	-
3	SW			OWN	-	-	-	-	-	-	-
				PRE	-	-	-	-	-	-	-
F-A	I502500		C-14	ISI	-	-	-	-	-	-	-
F1.30A	SWU-307		RIGID HANGER	AUG	-	-	-	-	-	-	-
3	SW			OWN	-	-	-	-	-	-	-
				PRE	-	-	-	-	-	-	-
F-A	I502520		C-14	ISI	-	-	-	-	-	-	-
F1.30A	SWU-311		RIGID RESTRAINT	AUG	-	-	-	-	-	-	-
3	SW			OWN	-	-	-	-	-	-	-
				PRE	-	-	-	-	-	-	-
F-A	I502535		C-14	ISI	-	-	-	-	-	-	-
F1.30A	SWU-312		RIGID RESTRAINT (IA)	AUG	-	-	-	-	-	-	-
3	SW			OWN	-	-	-	-	-	-	-
				PRE	-	-	-	-	-	-	-
F-A	I502700		C-16	ISI	-	-	-	-	-	-	-
F1.30A	SWU-314		RIGID RESTRAINT	AUG	-	-	-	-	-	-	-
3	SW			OWN	-	-	-	-	-	-	-
				PRE	-	-	-	-	-	-	-
F-A	I502710		C-16	ISI	-	-	-	-	-	-	-
F1.30A	SWU-315		GUIDE	AUG	-	-	-	-	-	-	-
3	SW			OWN	-	-	-	-	-	-	-
				PRE	-	-	-	-	-	-	-

Category, ItemNO, Class	Summary / CompID / System	Scope / Method / Procedure	Iso No. Comp. Desc. Code Case		Period 1 00	Period 1 02	Period 2 03	Period 2 05	Period 2 06	Period 3 08	Period 3 09
F-A	I502730		C-16	ISI	-	-	-	-	-	-	-
F1.30A	SWU-317		RIGID RESTRAINT	AUG	-	-	-	-	-	-	-
3	SW			OWN	-	-	-	-	-	-	-
				PRE	-	-	-	-	-	-	-
F-A	I502750		C-16	ISI	-	-	-	-	-	-	-
F1.30A	SWU-319		RIGID RESTRAINT	AUG	-	-	-	-	-	-	-
3	SW			OWN	-	-	-	-	-	-	-
				PRE	-	-	-	-	-	-	-
F-A	I502760		C-16	ISI	-	-	-	-	-	-	-
F1.30A	SWU-320		RIGID RESTRAINT	AUG	-	-	-	-	-	-	-
3	SW			OWN	-	-	-	-	-	-	-
				PRE	-	-	-	-	-	-	-
F-A	I502770		C-16	ISI	-	-	-	-	-	-	-
F1.30A	SWU-321		RIGID RESTRAINT	AUG	-	-	-	-	-	-	-
3	SW			OWN	-	-	-	-	-	-	-
				PRE	-	-	-	-	-	-	-
F-A	I502795	ISI/VT/VT-106	C-16	ISI	-	c	-	-	-	-	-
F1.30A	SWU-323		GUIDE (IA)	AUG	-	-	-	-	-	-	-
3	SW			OWN	-	-	-	-	-	-	-
				PRE	-	-	-	-	-	-	-
F-A	I502800		C-16	ISI	-	-	-	-	-	-	-
F1.30A	SWU-324		RIGID RESTRAINT	AUG	-	-	-	-	-	-	-
3	SW			OWN	-	-	-	-	-	-	-
				PRE	-	-	-	-	-	-	-
F-A	I502820		C-16	ISI	-	-	-	-	-	-	-
F1.30A	SWU-326		RIGID RESTRAINT	AUG	-	-	-	-	-	-	-
3	SW			OWN	-	-	-	-	-	-	-
				PRE	-	-	-	-	-	-	-
F-A	I502845		C-16	ISI	-	-	-	-	-	-	-
F1.30A	SWU-328		RIGID RESTRAINT (IA)	AUG	-	-	-	-	-	-	-
3	SW			OWN	-	-	-	-	-	-	-
				PRE	-	-	-	-	-	-	-
F-A	I502850		C-16	ISI	-	-	-	-	-	-	-
F1.30A	SWU-329		RIGID RESTRAINT	AUG	-	-	-	-	-	-	-
3	SW			OWN	-	-	-	-	-	-	-
				PRE	-	-	-	-	-	-	-
F-A	I502860		C-16	ISI	-	-	-	-	-	-	-
F1.30A	SWU-330		RIGID RESTRAINT	AUG	-	-	-	-	-	-	-
3	SW			OWN	-	-	-	-	-	-	-
				PRE	-	-	-	-	-	-	-

Category, ItemNO, Class	Summary / CompID / System	Scope / Method / Procedure	Iso No. Comp. Desc. Code Case		Period 1 00	Period 1 02	Period 2 03	Period 2 05	Period 2 06	Period 3 08	Period 3 09
F-A	I502880		C-16	ISI	-	-	-	-	-	-	-
F1.30A	SWU-332		RIGID RESTRAINT	AUG	-	-	-	-	-	-	-
3	SW			OWN	-	-	-	-	-	-	-
				PRE	-	-	-	-	-	-	-
F-A	I502900		C-16	ISI	-	-	-	-	-	-	-
F1.30A	SWU-334		RIGID RESTRAINT	AUG	-	-	-	-	-	-	-
3	SW			OWN	-	-	-	-	-	-	-
				PRE	-	-	-	-	-	-	-
F-A	I502910		C-16	ISI	-	-	-	-	-	-	-
F1.30A	SWU-335		RIGID RESTRAINT	AUG	-	-	-	-	-	-	-
3	SW			OWN	-	-	-	-	-	-	-
				PRE	-	-	-	-	-	-	-
F-A	I502935		C-16B	ISI	-	-	-	-	-	-	-
F1.30A	SWU-337		RIGID RESTRAINT (IA)	AUG	-	-	-	-	-	-	-
3	SW			OWN	-	-	-	-	-	-	-
				PRE	-	-	-	-	-	-	-
F-A	I502965		C-16B	ISI	-	-	-	-	-	-	-
F1.30A	SWU-340		RIGID HANGER (IA)	AUG	-	-	-	-	-	-	-
3	SW			OWN	-	-	-	-	-	-	-
				PRE	-	-	-	-	-	-	-
F-A	I502970		C-16B	ISI	-	-	-	-	-	-	-
F1.30A	SWU-341		RIGID RESTRAINT	AUG	-	-	-	-	-	-	-
3	SW			OWN	-	-	-	-	-	-	-
				PRE	-	-	-	-	-	-	-
F-A	I502990		C-16B	ISI	-	-	-	-	-	-	-
F1.30A	SWU-343		RIGID RESTRAINT	AUG	-	-	-	-	-	-	-
3	SW			OWN	-	-	-	-	-	-	-
				PRE	-	-	-	-	-	-	-
F-A	I503005	ISI/VT/VT-106	C-16B	ISI	-	-	-	-	s	-	-
F1.30A	SWU-344		RIGID RESTRAINT (IA)	AUG	-	-	-	-	-	-	-
3	SW			OWN	-	-	-	-	-	-	-
				PRE	-	-	-	-	-	-	-
F-A	I503010		C-16B	ISI	-	-	-	-	-	-	-
F1.30A	SWU-345		RIGID RESTRAINT	AUG	-	-	-	-	-	-	-
3	SW			OWN	-	-	-	-	-	-	-
				PRE	-	-	-	-	-	-	-
F-A	I503020		C-16B	ISI	-	-	-	-	-	-	-
F1.30A	SWU-346		RIGID RESTRAINT	AUG	-	-	-	-	-	-	-
3	SW			OWN	-	-	-	-	-	-	-
				PRE	-	-	-	-	-	-	-

Category, ItemNO, Class	Summary / CompID / System	Scope / Method / Procedure	Iso No. Comp. Desc. Code Case		Period 1 00	Period 1 02	Period 2 03	Period 2 05	Period 2 06	Period 3 08	Period 3 09
F-A	I503030		C-16B	ISI	-	-	-	-	-	-	-
F1.30A	SWU-368		RIGID HANGER	AUG	-	-	-	-	-	-	-
3	SW			OWN	-	-	-	-	-	-	-
				PRE	-	-	-	-	-	-	-
F-A	I503040		C-16B	ISI	-	-	-	-	-	-	-
F1.30A	SWU-369		RIGID RESTRAINT	AUG	-	-	-	-	-	-	-
3	SW			OWN	-	-	-	-	-	-	-
				PRE	-	-	-	-	-	-	-
F-A	I503125		C-16A	ISI	-	-	-	-	-	-	-
F1.30A	SWU-349		RIGID SUPPORT (IA)	AUG	-	-	-	-	-	-	-
3	SW			OWN	-	-	-	-	-	-	-
				PRE	-	-	-	-	-	-	-
F-A	I503135		C-16A	ISI	-	-	-	-	-	-	-
F1.30A	SWU-350		RIGID SUPPORT (IA)	AUG	-	-	-	-	-	-	-
3	SW			OWN	-	-	-	-	-	-	-
				PRE	-	-	-	-	-	-	-
F-A	I503140		C-16A	ISI	-	-	-	-	-	-	-
F1.30A	SWU-351		RIGID RESTRAINT	AUG	-	-	-	-	-	-	-
3	SW			OWN	-	-	-	-	-	-	-
				PRE	-	-	-	-	-	-	-
F-A	I503150		C-16A	ISI	-	-	-	-	-	-	-
F1.30A	SWU-352		RIGID RESTRAINT	AUG	-	-	-	-	-	-	-
3	SW			OWN	-	-	-	-	-	-	-
				PRE	-	-	-	-	-	-	-
F-A	I503160		C-16A	ISI	-	-	-	-	-	-	-
F1.30A	SWU-353		RIGID HANGER	AUG	-	-	-	-	-	-	-
3	SW			OWN	-	-	-	-	-	-	-
				PRE	-	-	-	-	-	-	-
F-A	I503175		C-16A	ISI	-	-	-	-	-	-	-
F1.30A	SWU-354		RIGID RESTRAINT (IA)	AUG	-	-	-	-	-	-	-
3	SW			OWN	-	-	-	-	-	-	-
				PRE	-	-	-	-	-	-	-
F-A	I503215		C-16	ISI	-	-	-	-	-	-	-
F1.30A	SWU-362		GUIDE	AUG	-	-	-	-	-	-	-
3	SW			OWN	-	-	-	-	-	-	-
				PRE	-	-	-	-	-	-	-
F-A	I503375	ISI/VT/VT-106	C-17	ISI	-	-	-	-	s	-	-
F1.30A	SWU-623 (N734)		GUIDE (IA)	AUG	-	-	-	-	-	-	-
3	SW			OWN	-	-	-	-	-	-	-
				PRE	-	-	-	-	-	-	-

Category, ItemNO, Class	Summary / CompID / System	Scope / Method / Procedure	Iso No. Comp. Desc. Code Case		Period 1 00	Period 1 02	Period 2 03	Period 2 05	Period 2 06	Period 3 08	Period 3 09
F-A	I503385		C-17	ISI	-	-	-	-	-	-	-
F1.30A	SWU-624 (N735)		GUIDE (IA)	AUG	-	-	-	-	-	-	-
3	SW			OWN	-	-	-	-	-	-	-
				PRE	-	-	-	-	-	-	-
F-A	I503395		C-17	ISI	-	-	-	-	-	-	-
F1.30A	SWU-625 (N736)		GUIDE (IA)	AUG	-	-	-	-	-	-	-
3	SW			OWN	-	-	-	-	-	-	-
				PRE	-	-	-	-	-	-	-
F-A	I503405		C-17	ISI	-	-	-	-	-	-	-
F1.30A	SWU-626 (N737)		GUIDE (IA)	AUG	-	-	-	-	-	-	-
3	SW			OWN	-	-	-	-	-	-	-
				PRE	-	-	-	-	-	-	-
F-A	I503455		C-17	ISI	-	-	-	-	-	-	-
F1.30A	SWU-631 (N742)		RIGID SUPPORT (IA)	AUG	-	-	-	-	-	-	-
3	SW			OWN	-	-	-	-	-	-	-
				PRE	-	-	-	-	-	-	-
F-A	I503465		C-17	ISI	-	-	-	-	-	-	-
F1.30A	SWU-632 (N743)		RIGID SUPPORT (IA)	AUG	-	-	-	-	-	-	-
3	SW			OWN	-	-	-	-	-	-	-
				PRE	-	-	-	-	-	-	-
F-A	I503475	ISI/VT/VT-106	C-17	ISI	-	-	-	-	s	-	-
F1.30A	SWU-633 (N744)		RIGID SUPPORT (IA)	AUG	-	-	-	-	-	-	-
3	SW			OWN	-	-	-	-	-	-	-
				PRE	-	-	-	-	-	-	-
F-A	I503485		C-17	ISI	-	-	-	-	-	-	-
F1.30A	SWU-634 (N745)		RIGID SUPPORT (IA)	AUG	-	-	-	-	-	-	-
3	SW			OWN	-	-	-	-	-	-	-
				PRE	-	-	-	-	-	-	-
F-A	I503495		C-17	ISI	-	-	-	-	-	-	-
F1.30A	SWU-635 (N746)		RIGID SUPPORT (IA)	AUG	-	-	-	-	-	-	-
3	SW			OWN	-	-	-	-	-	-	-
				PRE	-	-	-	-	-	-	-
F-A	I503505		C-17	ISI	-	-	-	-	-	-	-
F1.30A	SWU-636 (N747)		GUIDE (IA)	AUG	-	-	-	-	-	-	-
3	SW			OWN	-	-	-	-	-	-	-
				PRE	-	-	-	-	-	-	-
F-A	I503515		C-17	ISI	-	-	-	-	-	-	-
F1.30A	SWU-641 (N750)		RIGID RESTRAINT (IA)	AUG	-	-	-	-	-	-	-
3	SW			OWN	-	-	-	-	-	-	-
				PRE	-	-	-	-	-	-	-

Category, ItemNO, Class	Summary / CompID / System	Scope / Method / Procedure	Iso No. Comp. Desc. Code Case		Period 1 00	Period 1 02	Period 2 03	Period 2 05	Period 2 06	Period 3 08	Period 3 09
F-A	I503600		C-18	ISI	-	-	-	-	-	-	-
F1.30A	SWU-382		RIGID RESTRAINT	AUG	-	-	-	-	-	-	-
3	SW			OWN	-	-	-	-	-	-	-
				PRE	-	-	-	-	-	-	-
F-A	I503610		C-18	ISI	-	-	-	-	-	-	-
F1.30A	SWU-383		RIGID RESTRAINT	AUG	-	-	-	-	-	-	-
3	SW			OWN	-	-	-	-	-	-	-
				PRE	-	-	-	-	-	-	-
F-A	I503630		C-18	ISI	-	-	-	-	-	-	-
F1.30A	SWU-385		RIGID RESTRAINT	AUG	-	-	-	-	-	-	-
3	SW			OWN	-	-	-	-	-	-	-
				PRE	-	-	-	-	-	-	-
F-A	I503645		C-18	ISI	-	-	-	-	-	-	-
F1.30A	SWU-386		RIGID RESTRAINT (IA)	AUG	-	-	-	-	-	-	-
3	SW			OWN	-	-	-	-	-	-	-
				PRE	-	-	-	-	-	-	-
F-A	I503650		C-18	ISI	-	-	-	-	-	-	-
F1.30A	SWU-387		RIGID RESTRAINT	AUG	-	-	-	-	-	-	-
3	SW			OWN	-	-	-	-	-	-	-
				PRE	-	-	-	-	-	-	-
F-A	I503660		C-18	ISI	-	-	-	-	-	-	-
F1.30A	SWU-388		RIGID RESTRAINT	AUG	-	-	-	-	-	-	-
3	SW			OWN	-	-	-	-	-	-	-
				PRE	-	-	-	-	-	-	-
F-A	I503690		C-18	ISI	-	-	-	-	-	-	-
F1.30A	SWU-391		RIGID RESTRAINT	AUG	-	-	-	-	-	-	-
3	SW			OWN	-	-	-	-	-	-	-
				PRE	-	-	-	-	-	-	-
F-A	I503880		C-13	ISI	-	-	-	-	-	-	-
F1.30A	SWTH-38		RIGID HANGER	AUG	-	-	-	-	-	-	-
3	SW			OWN	-	-	-	-	-	-	-
				PRE	-	-	-	-	-	-	-
F-A	I505040		C-1F	ISI	-	-	-	-	-	-	-
F1.30A	AFU-12		RIGID RESTRAINT	AUG	-	-	-	-	-	-	-
3	AFW			OWN	-	-	-	-	-	-	-
				PRE	-	-	-	-	-	-	-
F-A	I505060		C-1F	ISI	-	-	-	-	-	-	-
F1.30A	AFU-14		RIGID RESTRAINT	AUG	-	-	-	-	-	-	-
3	AFW			OWN	-	-	-	-	-	-	-
				PRE	-	-	-	-	-	-	-

Category, ItemNO, Class	Summary / CompID / System	Scope / Method / Procedure	Iso No. Comp. Desc. Code Case		Period 1 00	Period 1 02	Period 2 03	Period 2 05	Period 2 06	Period 3 08	Period 3 09
F-A	I505080		C-1F	ISI	-	-	-	-	-	-	-
F1.30A	AFU-16		RIGID RESTRAINT	AUG	-	-	-	-	-	-	-
3	AFW			OWN	-	-	-	-	-	-	-
				PRE	-	-	-	-	-	-	-
F-A	I505090		C-1F	ISI	-	-	-	-	-	-	-
F1.30A	AFU-17		RIGID RESTRAINT	AUG	-	-	-	-	-	-	-
3	AFW			OWN	-	-	-	-	-	-	-
				PRE	-	-	-	-	-	-	-
F-A	I505105		C-1F	ISI	-	-	-	-	-	-	-
F1.30A	AFU-18		RIGID RESTRAINT (IA)	AUG	-	-	-	-	-	-	-
3	AFW			OWN	-	-	-	-	-	-	-
				PRE	-	-	-	-	-	-	-
F-A	I505130		C-1F	ISI	-	-	-	-	-	-	-
F1.30A	AFU-21		RIGID RESTRAINT	AUG	-	-	-	-	-	-	-
3	AFW			OWN	-	-	-	-	-	-	-
				PRE	-	-	-	-	-	-	-
F-A	I505140		C-1C	ISI	-	-	-	-	-	-	-
F1.30A	AFU-22		RIGID RESTRAINT	AUG	-	-	-	-	-	-	-
3	AFW			OWN	-	-	-	-	-	-	-
				PRE	-	-	-	-	-	-	-
F-A	I505160		C-1C	ISI	-	-	-	-	-	-	-
F1.30A	AFU-24		RIGID RESTRAINT	AUG	-	-	-	-	-	-	-
3	AFW			OWN	-	-	-	-	-	-	-
				PRE	-	-	-	-	-	-	-
F-A	I505180		C-1C	ISI	-	-	-	-	-	-	-
F1.30A	AFU-26		RIGID HANGER	AUG	-	-	-	-	-	-	-
3	AFW			OWN	-	-	-	-	-	-	-
				PRE	-	-	-	-	-	-	-
F-A	I505190		C-1C	ISI	-	-	-	-	-	-	-
F1.30A	AFU-27		RIGID RESTRAINT	AUG	-	-	-	-	-	-	-
3	AFW			OWN	-	-	-	-	-	-	-
				PRE	-	-	-	-	-	-	-
F-A	I505200		C-1C	ISI	-	-	-	-	-	-	-
F1.30A	AFU-28		RIGID HANGER	AUG	-	-	-	-	-	-	-
3	AFW			OWN	-	-	-	-	-	-	-
				PRE	-	-	-	-	-	-	-
F-A	I505250		C-1C	ISI	-	-	-	-	-	-	-
F1.30A	AFU-102		GUIDE	AUG	-	-	-	-	-	-	-
3	AFW			OWN	-	-	-	-	-	-	-
				PRE	-	-	-	-	-	-	-

Category, ItemNO, Class	Summary / CompID / System	Scope / Method / Procedure	Iso No. Comp. Desc. Code Case		Period 1 00	Period 1 02	Period 2 03	Period 2 05	Period 2 06	Period 3 08	Period 3 09
F-A	I505300		C-1E	ISI	-	-	-	-	-	-	-
F1.30A	AFU-32		GUIDE	AUG	-	-	-	-	-	-	-
3	AFW			OWN	-	-	-	-	-	-	-
				PRE	-	-	-	-	-	-	-
F-A	I505340	ISI/VT/VT-106	C-1D	ISI	-	-	-	-	-	s	-
F1.30A	AFU-36		RIGID RESTRAINT	AUG	-	-	-	-	-	-	-
3	AFW			OWN	-	-	-	-	-	-	-
				PRE	-	-	-	-	-	-	-
F-A	I505380		C-1D	ISI	-	-	-	-	-	-	-
F1.30A	AFU-40		RIGID RESTRAINT	AUG	-	-	-	-	-	-	-
3	AFW			OWN	-	-	-	-	-	-	-
				PRE	-	-	-	-	-	-	-
F-A	I505400		C-1D	ISI	-	-	-	-	-	-	-
F1.30A	AFU-42		RIGID RESTRAINT	AUG	-	-	-	-	-	-	-
3	AFW			OWN	-	-	-	-	-	-	-
				PRE	-	-	-	-	-	-	-
F-A	I505410	PSI/VT/VT-106	C-1D	ISI	-	-	-	-	-	-	-
F1.30A	AFU-43		RIGID RESTRAINT	AUG	-	-	-	-	-	-	-
3	AFW			OWN	-	-	-	-	-	-	-
				PRE	-	-	-	s	-	-	-
F-A	I505450		C-1D	ISI	-	-	-	-	-	-	-
F1.30A	AFU-47		GUIDE	AUG	-	-	-	-	-	-	-
3	AFW			OWN	-	-	-	-	-	-	-
				PRE	-	-	-	-	-	-	-
F-A	I505510		C-1A	ISI	-	-	-	-	-	-	-
F1.30A	AFU-53		GUIDE	AUG	-	-	-	-	-	-	-
3	AFW			OWN	-	-	-	-	-	-	-
				PRE	-	-	-	-	-	-	-
F-A	I505520		C-1A	ISI	-	-	-	-	-	-	-
F1.30A	AFU-54		RIGID RESTRAINT	AUG	-	-	-	-	-	-	-
3	AFW			OWN	-	-	-	-	-	-	-
				PRE	-	-	-	-	-	-	-
F-A	I505530		C-1A	ISI	-	-	-	-	-	-	-
F1.30A	AFU-55		GUIDE	AUG	-	-	-	-	-	-	-
3	AFW			OWN	-	-	-	-	-	-	-
				PRE	-	-	-	-	-	-	-
F-A	I505614		C-1	ISI	-	-	-	-	-	-	-
F1.30A	AFU-88		RIGID HANGER	AUG	-	-	-	-	-	-	-
3	AFW			OWN	-	-	-	-	-	-	-
				PRE	-	-	-	-	-	-	-

Category, ItemNO, Class	Summary / CompID / System	Scope / Method / Procedure	Iso No. Comp. Desc. Code Case		Period 1 00	Period 1 02	Period 2 03	Period 2 05	Period 2 06	Period 3 08	Period 3 09
F-A	I505618		C-1	ISI	-	-	-	-	-	-	-
F1.30A	N961		RIGID HANGER	AUG	-	-	-	-	-	-	-
3	AFW			OWN	-	-	-	-	-	-	-
				PRE	-	-	-	-	-	-	-
F-A	I505650		C-1	ISI	-	-	-	-	-	-	-
F1.30A	AFU-65		RIGID RESTRAINT	AUG	-	-	-	-	-	-	-
3	AFW			OWN	-	-	-	-	-	-	-
				PRE	-	-	-	-	-	-	-
F-A	I505665	ISI/VT/VT-106	C-1	ISI	-	-	-	-	-	s	-
F1.30A	AFU-66		RIGID RESTRAINT (IA)	AUG	-	-	-	-	-	-	-
3	AFW			OWN	-	-	-	-	-	-	-
				PRE	-	-	-	-	-	-	-
F-A	I505670		C-1	ISI	-	-	-	-	-	-	-
F1.30A	AFU-67		RIGID HANGER	AUG	-	-	-	-	-	-	-
3	AFW			OWN	-	-	-	-	-	-	-
				PRE	-	-	-	-	-	-	-
F-A	I505680		C-1	ISI	-	-	-	-	-	-	-
F1.30A	AFU-68		RIGID RESTRAINT	AUG	-	-	-	-	-	-	-
3	AFW			OWN	-	-	-	-	-	-	-
				PRE	-	-	-	-	-	-	-
F-A	I505700		C-1	ISI	-	-	-	-	-	-	-
F1.30A	AFU-70		RIGID SUPPORT	AUG	-	-	-	-	-	-	-
3	AFW			OWN	-	-	-	-	-	-	-
				PRE	-	-	-	-	-	-	-
F-A	I505710		C-1	ISI	-	-	-	-	-	-	-
F1.30A	AFU-71		RIGID RESTRAINT	AUG	-	-	-	-	-	-	-
3	AFW			OWN	-	-	-	-	-	-	-
				PRE	-	-	-	-	-	-	-
F-A	I505730		C-1B	ISI	-	-	-	-	-	-	-
F1.30A	AFU-73		RIGID RESTRAINT	AUG	-	-	-	-	-	-	-
3	AFW			OWN	-	-	-	-	-	-	-
				PRE	-	-	-	-	-	-	-
F-A	I505740		C-1B	ISI	-	-	-	-	-	-	-
F1.30A	AFU-74		RIGID RESTRAINT	AUG	-	-	-	-	-	-	-
3	AFW			OWN	-	-	-	-	-	-	-
				PRE	-	-	-	-	-	-	-
F-A	I505770		C-1B	ISI	-	-	-	-	-	-	-
F1.30A	AFU-77		GUIDE	AUG	-	-	-	-	-	-	-
3	AFW			OWN	-	-	-	-	-	-	-
				PRE	-	-	-	-	-	-	-

Category, ItemNO, Class	Summary / CompID / System	Scope / Method / Procedure	Iso No. Comp. Desc. Code Case		Period 1 00	Period 1 02	Period 2 03	Period 2 05	Period 2 06	Period 3 08	Period 3 09
F-A	I505780		C-1B	ISI	-	-	-	-	-	-	-
F1.30A	AFU-78		RIGID RESTRAINT (IA)	AUG	-	-	-	-	-	-	-
3	AFW			OWN	-	-	-	-	-	-	-
				PRE	-	-	-	-	-	-	-
F-A	I505800		C-1B	ISI	-	-	-	-	-	-	-
F1.30A	AFU-80		RIGID HANGER	AUG	-	-	-	-	-	-	-
3	AFW			OWN	-	-	-	-	-	-	-
				PRE	-	-	-	-	-	-	-
F-A	I505830		C-1B	ISI	-	-	-	-	-	-	-
F1.30A	AFU-92		RIGID RESTRAINT	AUG	-	-	-	-	-	-	-
3	AFW			OWN	-	-	-	-	-	-	-
				PRE	-	-	-	-	-	-	-
F-A	I505860		C-1B	ISI	-	-	-	-	-	-	-
F1.30A	AFU-95		RIGID RESTRAINT	AUG	-	-	-	-	-	-	-
3	AFW			OWN	-	-	-	-	-	-	-
				PRE	-	-	-	-	-	-	-
F-A	I505875		C-1B	ISI	-	-	-	-	-	-	-
F1.30A	AFU-96		RIGID RESTRAINT (IA)	AUG	-	-	-	-	-	-	-
3	AFW			OWN	-	-	-	-	-	-	-
				PRE	-	-	-	-	-	-	-
F-A	I505900		C-1	ISI	-	-	-	-	-	-	-
F1.30A	AFU-81		RIGID RESTRAINT	AUG	-	-	-	-	-	-	-
3	AFW			OWN	-	-	-	-	-	-	-
				PRE	-	-	-	-	-	-	-
F-A	I505920	ISI/VT/VT-106	C-1	ISI	-	-	-	s	-	-	-
F1.30A	AFU-83		RIGID RESTRAINT	AUG	-	-	-	-	-	-	-
3	AFW			OWN	-	-	-	-	-	-	-
				PRE	-	-	-	-	-	-	-
F-A	I505930	ISI/VT/VT-106	C-1	ISI	-	-	-	s	-	-	-
F1.30A	AFU-84		RIGID RESTRAINT	AUG	-	-	-	-	-	-	-
3	AFW			OWN	-	-	-	-	-	-	-
				PRE	-	-	-	-	-	-	-
F-A	I505940		C-1A	ISI	-	-	-	-	-	-	-
F1.30A	AFU-85		GUIDE	AUG	-	-	-	-	-	-	-
3	AFW			OWN	-	-	-	-	-	-	-
				PRE	-	-	-	-	-	-	-
F-A	I505950		C-1A	ISI	-	-	-	-	-	-	-
F1.30A	AFU-86		RIGID RESTRAINT	AUG	-	-	-	-	-	-	-
3	AFW			OWN	-	-	-	-	-	-	-
				PRE	-	-	-	-	-	-	-

Category, ItemNO, Class	Summary / CompID / System	Scope / Method / Procedure	Iso No. Comp. Desc. Code Case		Period 1 00	Period 1 02	Period 2 03	Period 2 05	Period 2 06	Period 3 08	Period 3 09
F-A	I506030	ISI/VT/VT-106	C-1A	ISI	-	-	-	-	-	s	-
F1.30A	AFU-119		RIGID RESTRAINT	AUG	-	-	-	-	-	-	-
3	AFW			OWN	-	-	-	-	-	-	-
				PRE	-	-	-	-	-	-	-
F-A	I506040		C-1A	ISI	-	-	-	-	-	-	-
F1.30A	AFU-120		RIGID RESTRAINT	AUG	-	-	-	-	-	-	-
3	AFW			OWN	-	-	-	-	-	-	-
				PRE	-	-	-	-	-	-	-
F-A	I507208	ISI/VT/VT-106	C-21	ISI	-	-	-	-	-	-	s
F1.30A	AFU-257		GUIDE	AUG	-	-	-	-	-	-	-
3	SAFW			OWN	-	-	-	-	-	-	-
				PRE	-	-	-	-	-	-	-
F-A	I507445		C-22	ISI	-	-	-	-	-	-	-
F1.30A	AFU-153 (AFW-120)		GUIDE	AUG	-	-	-	-	-	-	-
3	SAFW			OWN	-	-	-	-	-	-	-
				PRE	-	-	-	-	-	-	-
F-A	I508147		C-25	ISI	-	-	-	-	-	-	-
F1.30A	AFU-232 (NEW)		GUIDE	AUG	-	-	-	-	-	-	-
3	SAFW			OWN	-	-	-	-	-	-	-
				PRE	-	-	-	-	-	-	-
F-A	I508330		C-25	ISI	-	-	-	-	-	-	-
F1.30A	AFU-253 (AFW-71)		RIGID HANGER	AUG	-	-	-	-	-	-	-
3	SAFW			OWN	-	-	-	-	-	-	-
				PRE	-	-	-	-	-	-	-
F-A	I508410		C-25	ISI	-	-	-	-	-	-	-
F1.30A	AFU-184 (AFW-110)		GUIDE	AUG	-	-	-	-	-	-	-
3	SAFW			OWN	-	-	-	-	-	-	-
				PRE	-	-	-	-	-	-	-
F-A	I508420		C-22	ISI	-	-	-	-	-	-	-
F1.30A	AFU-185 (AFW-109)		GUIDE	AUG	-	-	-	-	-	-	-
3	SAFW			OWN	-	-	-	-	-	-	-
				PRE	-	-	-	-	-	-	-
F-A	I508430	ISI/VT/VT-106	C-22	ISI	-	-	-	-	s	-	-
F1.30A	AFU-186 (AFW-108)		GUIDE	AUG	-	-	-	-	-	-	-
3	SAFW			OWN	-	-	-	-	-	-	-
				PRE	-	-	-	-	-	-	-
F-A	I508500	PSI/VT/VT-106	C-16	ISI	-	-	-	-	-	-	-
F1.30A	AFU-1		RIGID RESTRAINT	AUG	-	-	-	-	-	-	-
3	AFW			OWN	-	-	-	-	-	-	-
				PRE	c	-	-	-	-	-	-

Category, ItemNO, Class	Summary / CompID / System	Scope / Method / Procedure	Iso No. Comp. Desc. Code Case		Period 1 00	Period 1 02	Period 2 03	Period 2 05	Period 2 06	Period 3 08	Period 3 09
F-A	I508510	PSI/VT/VT-106	C-16	ISI	-	-	-	-	-	-	-
F1.30A	AFU-2		RIGID RESTRAINT	AUG	-	-	-	-	-	-	-
3	AFW			OWN	-	-	-	-	-	-	-
				PRE	c	-	-	-	-	-	-
F-A	I508600		C-33	ISI	-	-	-	-	-	-	-
F1.30A	SWU-284		RIGID RESTRAINT	AUG	-	-	-	-	-	-	-
3	AFW			OWN	-	-	-	-	-	-	-
				PRE	-	-	-	-	-	-	-
F-A	I508610	PSI/VT/VT-106	C-33	ISI	-	-	-	-	-	-	-
F1.30A	SWU-285		RIGID RESTRAINT	AUG	-	-	-	-	-	-	-
3	AFW			OWN	-	-	-	-	-	-	-
				PRE	-	c	-	-	-	-	-
F-A	I508620	PSI/VT/VT-106	C-33	ISI	-	-	-	-	-	-	-
F1.30A	SWU-286		U-BOLT	AUG	-	-	-	-	-	-	-
3	AFW			OWN	-	-	-	-	-	-	-
				PRE	-	c	-	-	-	-	-
F-A	I508630		C-33	ISI	-	-	-	-	-	-	-
F1.30A	SWU-287		RIGID RESTRAINT	AUG	-	-	-	-	-	-	-
3	AFW			OWN	-	-	-	-	-	-	-
				PRE	-	-	-	-	-	-	-
F-A	I508710		C-26	ISI	-	-	-	-	-	-	-
F1.30A	SWU-538 (SW-97)		GUIDE	AUG	-	-	-	-	-	-	-
3	SAFW			OWN	-	-	-	-	-	-	-
				PRE	-	-	-	-	-	-	-
F-A	I508715		C-26	ISI	-	-	-	-	-	-	-
F1.30A	SWU-539 (SW-98)		GUIDE	AUG	-	-	-	-	-	-	-
3	SAFW			OWN	-	-	-	-	-	-	-
				PRE	-	-	-	-	-	-	-
F-A	I508730		C-26	ISI	-	-	-	-	-	-	-
F1.30A	SWU-542 (SW-101)		RIGID HANGER	AUG	-	-	-	-	-	-	-
3	SAFW			OWN	-	-	-	-	-	-	-
				PRE	-	-	-	-	-	-	-
F-A	I508740		C-26	ISI	-	-	-	-	-	-	-
F1.30A	SWU-544 (SW-103)		GUIDE	AUG	-	-	-	-	-	-	-
3	SAFW			OWN	-	-	-	-	-	-	-
				PRE	-	-	-	-	-	-	-
F-A	I508800		C-26	ISI	-	-	-	-	-	-	-
F1.30A	SWU-587 (SW-119)		GUIDE	AUG	-	-	-	-	-	-	-
3	SAFW			OWN	-	-	-	-	-	-	-
				PRE	-	-	-	-	-	-	-

Category, ItemNO, Class	Summary / CompID / System	Scope / Method / Procedure	Iso No. Comp. Desc. Code Case		Period 1 00	Period 1 02	Period 2 03	Period 2 05	Period 2 06	Period 3 08	Period 3 09
F-A	I508880		C-27	ISI	-	-	-	-	-	-	-
F1.30A	SWU-505 (SW-92)		RIGID HANGER	AUG	-	-	-	-	-	-	-
3	SAFW			OWN	-	-	-	-	-	-	-
				PRE	-	-	-	-	-	-	-
F-A	I508885		C-27	ISI	-	-	-	-	-	-	-
F1.30A	SWU-504 (SW-113)		RIGID RESTRAINT	AUG	-	-	-	-	-	-	-
3	SAFW			OWN	-	-	-	-	-	-	-
				PRE	-	-	-	-	-	-	-
F-A	I508895		C-27	ISI	-	-	-	-	-	-	-
F1.30A	SWU-507 (SW-94)		RIGID HANGER	AUG	-	-	-	-	-	-	-
3	SAFW			OWN	-	-	-	-	-	-	-
				PRE	-	-	-	-	-	-	-
F-A	I509005	ISI/VT/VT-106	C-32	ISI	-	-	-	-	-	s	-
F1.30A	MSU-62		RIGID SUPPORT (IA)	AUG	-	-	-	-	-	-	-
3	MS			OWN	-	-	-	-	-	-	-
				PRE	-	-	-	-	-	-	-
F-A	I509025		C-32	ISI	-	-	-	-	-	-	-
F1.30A	MSU-64		RIGID RESTRAINT (IA)	AUG	-	-	-	-	-	-	-
3	MS			OWN	-	-	-	-	-	-	-
				PRE	-	-	-	-	-	-	-
F-A	I509060		C-32	ISI	-	-	-	-	-	-	-
F1.30A	MSU-68		RIGID RESTRAINT	AUG	-	-	-	-	-	-	-
3	MS			OWN	-	-	-	-	-	-	-
				PRE	-	-	-	-	-	-	-
F-A	I509070		C-32	ISI	-	-	-	-	-	-	-
F1.30A	MSU-69		RIGID RESTRAINT	AUG	-	-	-	-	-	-	-
3	MS			OWN	-	-	-	-	-	-	-
				PRE	-	-	-	-	-	-	-
F-A	I509140		C-32	ISI	-	-	-	-	-	-	-
F1.30A	MSU-76		RIGID RESTRAINT	AUG	-	-	-	-	-	-	-
3	MS			OWN	-	-	-	-	-	-	-
				PRE	-	-	-	-	-	-	-
F-A	I500245		C-2	ISI	-	-	-	-	-	-	-
F1.30B	CCU-90		RIGID RESTRAINT (IA)	AUG	-	-	-	-	-	-	-
3	AC			OWN	-	-	-	-	-	-	-
				PRE	-	-	-	-	-	-	-
F-A	I500380		C-3	ISI	-	-	-	-	-	-	-
F1.30B	CCU-171		RIGID RESTRAINT	AUG	-	-	-	-	-	-	-
3	AC			OWN	-	-	-	-	-	-	-
				PRE	-	-	-	-	-	-	-

Category, ItemNO, Class	Summary / CompID / System	Scope / Method / Procedure	Iso No. Comp. Desc. Code Case		Period 1 00	Period 1 02	Period 2 03	Period 2 05	Period 2 06	Period 3 08	Period 3 09
F-A	I500440		C-3	ISI	-	-	-	-	-	-	-
F1.30B	CCU-177		GUIDE	AUG	-	-	-	-	-	-	-
3	AC			OWN	-	-	-	-	-	-	-
				PRE	-	-	-	-	-	-	-
F-A	I500475	ISI/VT/VT-106	C-3	ISI	-	c	-	-	-	-	-
F1.30B	CCU-180	ISI/VT/VT-106	GUIDE (IA)	AUG	-	-	-	-	-	-	-
3	AC			OWN	-	-	-	-	-	-	-
				PRE	-	-	-	-	-	-	-
F-A	I500535		C-4	ISI	-	-	-	-	-	-	-
F1.30B	CCU-138		GUIDE (IA)	AUG	-	-	-	-	-	-	-
3	AC			OWN	-	-	-	-	-	-	-
				PRE	-	-	-	-	-	-	-
F-A	I500545	ISI/VT/VT-106	C-4	ISI	-	-	c	-	-	-	-
F1.30B	CCU-139		GUIDE (IA)	AUG	-	-	-	-	-	-	-
3	AC			OWN	-	-	-	-	-	-	-
				PRE	-	-	-	-	-	-	-
F-A	I500550		C-4	ISI	-	-	-	-	-	-	-
F1.30B	CCU-140		RIGID RESTRAINT	AUG	-	-	-	-	-	-	-
3	AC			OWN	-	-	-	-	-	-	-
				PRE	-	-	-	-	-	-	-
F-A	I500560		C-4	ISI	-	-	-	-	-	-	-
F1.30B	CCU-141		RIGID RESTRAINT	AUG	-	-	-	-	-	-	-
3	AC			OWN	-	-	-	-	-	-	-
				PRE	-	-	-	-	-	-	-
F-A	I500590		C-4	ISI	-	-	-	-	-	-	-
F1.30B	CCU-144		RIGID RESTRAINT	AUG	-	-	-	-	-	-	-
3	AC			OWN	-	-	-	-	-	-	-
				PRE	-	-	-	-	-	-	-
F-A	I500700		C-5	ISI	-	-	-	-	-	-	-
F1.30B	CCU-150		RIGID RESTRAINT	AUG	-	-	-	-	-	-	-
3	AC			OWN	-	-	-	-	-	-	-
				PRE	-	-	-	-	-	-	-
F-A	I500715		C-5	ISI	-	-	-	-	-	-	-
F1.30B	CCU-151		RIGID RESTRAINT (IA)	AUG	-	-	-	-	-	-	-
3	AC			OWN	-	-	-	-	-	-	-
				PRE	-	-	-	-	-	-	-
F-A	I500900		C-7	ISI	-	-	-	-	-	-	-
F1.30B	CCU-127		GUIDE	AUG	-	-	-	-	-	-	-
3	AC			OWN	-	-	-	-	-	-	-
				PRE	-	-	-	-	-	-	-

Category, ItemNO, Class	Summary / CompID / System	Scope / Method / Procedure	Iso No. Comp. Desc. Code Case		Period 1 00	Period 1 02	Period 2 03	Period 2 05	Period 2 06	Period 3 08	Period 3 09
F-A	I500915		C-7	ISI	-	-	-	-	-	-	-
F1.30B	CCU-128		GUIDE (IA)	AUG	-	-	-	-	-	-	-
3	AC			OWN	-	-	-	-	-	-	-
				PRE	-	-	-	-	-	-	-
F-A	I500925		C-7	ISI	-	-	-	-	-	-	-
F1.30B	CCU-129		ANCHOR (IA)	AUG	-	-	-	-	-	-	-
3	AC			OWN	-	-	-	-	-	-	-
				PRE	-	-	-	-	-	-	-
F-A	I501000		C-7	ISI	-	-	-	-	-	-	-
F1.30B	CCU-161		GUIDE	AUG	-	-	-	-	-	-	-
3	AC			OWN	-	-	-	-	-	-	-
				PRE	-	-	-	-	-	-	-
F-A	I501010		C-7	ISI	-	-	-	-	-	-	-
F1.30B	CCU-162		RIGID RESTRAINT	AUG	-	-	-	-	-	-	-
3	AC			OWN	-	-	-	-	-	-	-
				PRE	-	-	-	-	-	-	-
F-A	I501035		C-7	ISI	-	-	-	-	-	-	-
F1.30B	CCU-164		ANCHOR (IA)	AUG	-	-	-	-	-	-	-
3	AC			OWN	-	-	-	-	-	-	-
				PRE	-	-	-	-	-	-	-
F-A	I501130		C-5	ISI	-	-	-	-	-	-	-
F1.30B	CCU-230		RIGID RESTRAINT	AUG	-	-	-	-	-	-	-
3	AC			OWN	-	-	-	-	-	-	-
				PRE	-	-	-	-	-	-	-
F-A	I501590		C-11	ISI	-	-	-	-	-	-	-
F1.30B	SWU-157		GUIDE	AUG	-	-	-	-	-	-	-
3	SW			OWN	-	-	-	-	-	-	-
				PRE	-	-	-	-	-	-	-
F-A	I501610		C-11	ISI	-	-	-	-	-	-	-
F1.30B	SWU-159		GUIDE	AUG	-	-	-	-	-	-	-
3	SW			OWN	-	-	-	-	-	-	-
				PRE	-	-	-	-	-	-	-
F-A	I501635		C-11	ISI	-	-	-	-	-	-	-
F1.30B	SWU-161		RIGID HANGER (IA)	AUG	-	-	-	-	-	-	-
3	SW			OWN	-	-	-	-	-	-	-
				PRE	-	-	-	-	-	-	-
F-A	I501640		C-11	ISI	-	-	-	-	-	-	-
F1.30B	SWU-162		RIGID RESTRAINT	AUG	-	-	-	-	-	-	-
3	SW			OWN	-	-	-	-	-	-	-
				PRE	-	-	-	-	-	-	-

Category, ItemNO, Class	Summary / CompID / System	Scope / Method / Procedure	Iso No. Comp. Desc. Code Case		Period 1 00	Period 1 02	Period 2 03	Period 2 05	Period 2 06	Period 3 08	Period 3 09
F-A	I501650		C-11	ISI	-	-	-	-	-	-	-
F1.30B	SWU-163		RIGID RESTRAINT	AUG	-	-	-	-	-	-	-
3	SW			OWN	-	-	-	-	-	-	-
				PRE	-	-	-	-	-	-	-
F-A	I501665	PSI/VT/VT-106	C-11	ISI	-	-	-	-	-	-	-
F1.30B	SWU-164	PSI/VT/VT-106	RIGID HANGER (IA)	AUG	-	-	-	-	-	-	-
3	SW			OWN	-	-	-	-	-	-	-
				PRE	-	c	-	b	-	-	-
F-A	I501850		C-12	ISI	-	-	-	-	-	-	-
F1.30B	SWU-189		GUIDE	AUG	-	-	-	-	-	-	-
3	SW			OWN	-	-	-	-	-	-	-
				PRE	-	-	-	-	-	-	-
F-A	I501860		C-12	ISI	-	-	-	-	-	-	-
F1.30B	SWU-190		GUIDE	AUG	-	-	-	-	-	-	-
3	SW			OWN	-	-	-	-	-	-	-
				PRE	-	-	-	-	-	-	-
F-A	I501875		C-12	ISI	-	-	-	-	-	-	-
F1.30B	SWU-191		RIGID SUPPORT (IA)	AUG	-	-	-	-	-	-	-
3	SW			OWN	-	-	-	-	-	-	-
				PRE	-	-	-	-	-	-	-
F-A	I501880		C-12	ISI	-	-	-	-	-	-	-
F1.30B	SWU-192		GUIDE	AUG	-	-	-	-	-	-	-
3	SW			OWN	-	-	-	-	-	-	-
				PRE	-	-	-	-	-	-	-
F-A	I501910		C-12	ISI	-	-	-	-	-	-	-
F1.30B	SWU-195		GUIDE	AUG	-	-	-	-	-	-	-
3	SW			OWN	-	-	-	-	-	-	-
				PRE	-	-	-	-	-	-	-
F-A	I501950		C-12	ISI	-	-	-	-	-	-	-
F1.30B	SWU-199		GUIDE	AUG	-	-	-	-	-	-	-
3	SW			OWN	-	-	-	-	-	-	-
				PRE	-	-	-	-	-	-	-
F-A	I501980		C-12	ISI	-	-	-	-	-	-	-
F1.30B	SWU-202		GUIDE	AUG	-	-	-	-	-	-	-
3	SW			OWN	-	-	-	-	-	-	-
				PRE	-	-	-	-	-	-	-
F-A	I501990		C-12	ISI	-	-	-	-	-	-	-
F1.30B	SWU-203		GUIDE	AUG	-	-	-	-	-	-	-
3	SW			OWN	-	-	-	-	-	-	-
				PRE	-	-	-	-	-	-	-

Category, ItemNO, Class	Summary / CompID / System	Scope / Method / Procedure	Iso No. Comp. Desc. Code Case		Period 1 00	Period 1 02	Period 2 03	Period 2 05	Period 2 06	Period 3 08	Period 3 09
F-A	I502030		C-12	ISI	-	-	-	-	-	-	-
F1.30B	SWU-207		GUIDE	AUG	-	-	-	-	-	-	-
3	SW			OWN	-	-	-	-	-	-	-
				PRE	-	-	-	-	-	-	-
F-A	I502070		C-12	ISI	-	-	-	-	-	-	-
F1.30B	SWU-211		GUIDE	AUG	-	-	-	-	-	-	-
3	SW			OWN	-	-	-	-	-	-	-
				PRE	-	-	-	-	-	-	-
F-A	I502120		C-12	ISI	-	-	-	-	-	-	-
F1.30B	SWU-216		RIGID RESTRAINT	AUG	-	-	-	-	-	-	-
3	SW			OWN	-	-	-	-	-	-	-
				PRE	-	-	-	-	-	-	-
F-A	I502260		C-13	ISI	-	-	-	-	-	-	-
F1.30B	SWU-250		GUIDE	AUG	-	-	-	-	-	-	-
3	SW			OWN	-	-	-	-	-	-	-
				PRE	-	-	-	-	-	-	-
F-A	I502285		C-13	ISI	-	-	-	-	-	-	-
F1.30B	SWU-252		RIGID SUPPORT (IA)	AUG	-	-	-	-	-	-	-
3	SW			OWN	-	-	-	-	-	-	-
				PRE	-	-	-	-	-	-	-
F-A	I502290		C-13	ISI	-	-	-	-	-	-	-
F1.30B	SWU-253		GUIDE	AUG	-	-	-	-	-	-	-
3	SW			OWN	-	-	-	-	-	-	-
				PRE	-	-	-	-	-	-	-
F-A	I502405		C-14	ISI	-	-	-	-	-	-	-
F1.30B	SWU-291		RIGID RESTRAINT (IA)	AUG	-	-	-	-	-	-	-
3	SW			OWN	-	-	-	-	-	-	-
				PRE	-	-	-	-	-	-	-
F-A	I502410		C-14	ISI	-	-	-	-	-	-	-
F1.30B	SWU-292		RIGID RESTRAINT	AUG	-	-	-	-	-	-	-
3	SW			OWN	-	-	-	-	-	-	-
				PRE	-	-	-	-	-	-	-
F-A	I502420		C-14	ISI	-	-	-	-	-	-	-
F1.30B	SWU-293		RIGID RESTRAINT	AUG	-	-	-	-	-	-	-
3	SW			OWN	-	-	-	-	-	-	-
				PRE	-	-	-	-	-	-	-
F-A	I502445	ISI/VT/VT-106	C-14	ISI	-	-	-	-	-	-	s
F1.30B	SWU-295		RIGID HANGER (IA)	AUG	-	-	-	-	-	-	-
3	SW			OWN	-	-	-	-	-	-	-
				PRE	-	-	-	-	-	-	-

Category, ItemNO, Class	Summary / CompID / System	Scope / Method / Procedure	Iso No. Comp. Desc. Code Case		Period 1 00	Period 1 02	Period 2 03	Period 2 05	Period 2 06	Period 3 08	Period 3 09
F-A	I502470		C-14	ISI	-	-	-	-	-	-	-
F1.30B	SWU-298		RIGID RESTRAINT	AUG	-	-	-	-	-	-	-
3	SW			OWN	-	-	-	-	-	-	-
				PRE	-	-	-	-	-	-	-
F-A	I502485	ISI/VT/VT-106	C-14	ISI	-	c	-	-	-	-	-
F1.30B	SWU-299		RIGID RESTRAINT (IA)	AUG	-	-	-	-	-	-	-
3	SW			OWN	-	-	-	-	-	-	-
				PRE	-	-	-	-	-	-	-
F-A	I502510		C-14	ISI	-	-	-	-	-	-	-
F1.30B	SWU-310		RIGID RESTRAINT	AUG	-	-	-	-	-	-	-
3	SW			OWN	-	-	-	-	-	-	-
				PRE	-	-	-	-	-	-	-
F-A	I502725	ISI/VT/VT-106	C-16	ISI	-	-	-	-	-	-	s
F1.30B	SWU-316		GUIDE (IA)	AUG	-	-	-	-	-	-	-
3	SW			OWN	-	-	-	-	-	-	-
				PRE	-	-	-	-	-	-	-
F-A	I502740		C-16	ISI	-	-	-	-	-	-	-
F1.30B	SWU-318		RIGID RESTRAINT	AUG	-	-	-	-	-	-	-
3	SW			OWN	-	-	-	-	-	-	-
				PRE	-	-	-	-	-	-	-
F-A	I502870		C-16	ISI	-	-	-	-	-	-	-
F1.30B	SWU-331		RIGID RESTRAINT	AUG	-	-	-	-	-	-	-
3	SW			OWN	-	-	-	-	-	-	-
				PRE	-	-	-	-	-	-	-
F-A	I502890		C-16	ISI	-	-	-	-	-	-	-
F1.30B	SWU-333		RIGID RESTRAINT	AUG	-	-	-	-	-	-	-
3	SW			OWN	-	-	-	-	-	-	-
				PRE	-	-	-	-	-	-	-
F-A	I502920		C-16B	ISI	-	-	-	-	-	-	-
F1.30B	SWU-336		GUIDE	AUG	-	-	-	-	-	-	-
3	SW			OWN	-	-	-	-	-	-	-
				PRE	-	-	-	-	-	-	-
F-A	I502940		C-16B	ISI	-	-	-	-	-	-	-
F1.30B	SWU-338		RIGID RESTRAINT	AUG	-	-	-	-	-	-	-
3	SW			OWN	-	-	-	-	-	-	-
				PRE	-	-	-	-	-	-	-
F-A	I502950		C-16B	ISI	-	-	-	-	-	-	-
F1.30B	SWU-339		RIGID RESTRAINT	AUG	-	-	-	-	-	-	-
3	SW			OWN	-	-	-	-	-	-	-
				PRE	-	-	-	-	-	-	-

Category, ItemNO, Class	Summary / CompID / System	Scope / Method / Procedure	Iso No. Comp. Desc. Code Case		Period 1 00	Period 1 02	Period 2 03	Period 2 05	Period 2 06	Period 3 08	Period 3 09
F-A	I502980		C-16B	ISI	-	-	-	-	-	-	-
F1.30B	SWU-342		RIGID RESTRAINT	AUG	-	-	-	-	-	-	-
3	SW			OWN	-	-	-	-	-	-	-
				PRE	-	-	-	-	-	-	-
F-A	I503100		C-16A	ISI	-	-	-	-	-	-	-
F1.30B	SWU-347		RIGID RESTRAINT	AUG	-	-	-	-	-	-	-
3	SW			OWN	-	-	-	-	-	-	-
				PRE	-	-	-	-	-	-	-
F-A	I503110		C-16A	ISI	-	-	-	-	-	-	-
F1.30B	SWU-348		RIGID RESTRAINT	AUG	-	-	-	-	-	-	-
3	SW			OWN	-	-	-	-	-	-	-
				PRE	-	-	-	-	-	-	-
F-A	I503200		C-16	ISI	-	-	-	-	-	-	-
F1.30B	SWU-361		GUIDE	AUG	-	-	-	-	-	-	-
3	SW			OWN	-	-	-	-	-	-	-
				PRE	-	-	-	-	-	-	-
F-A	I503305	PSI/VT/VT-106	C-17	ISI	-	-	-	-	-	-	-
F1.30B	SWU-616 (N727)		GUIDE	AUG	-	-	-	-	-	-	-
3	SW			OWN	-	-	-	-	-	-	-
				PRE	-	c	-	-	-	-	-
F-A	I503315	PSI/VT/VT-106	C-17	ISI	-	-	-	-	-	-	-
F1.30B	SWU-617 (N728)		GUIDE	AUG	-	-	-	-	-	-	-
3	SW			OWN	-	-	-	-	-	-	-
				PRE	-	c	-	-	-	-	-
F-A	I503325	ISI/VT/VT-106	C-17	ISI	-	c	-	-	-	-	-
F1.30B	SWU-618 (N729)		GUIDE (IA)	AUG	-	-	-	-	-	-	-
3	SW			OWN	-	-	-	-	-	-	-
				PRE	-	-	-	-	-	-	-
F-A	I503335		C-17	ISI	-	-	-	-	-	-	-
F1.30B	SWU-619 (N730)		GUIDE	AUG	-	-	-	-	-	-	-
3	SW			OWN	-	-	-	-	-	-	-
				PRE	-	-	-	-	-	-	-
F-A	I503345		C-17	ISI	-	-	-	-	-	-	-
F1.30B	SWU-620 (N731)		GUIDE	AUG	-	-	-	-	-	-	-
3	SW			OWN	-	-	-	-	-	-	-
				PRE	-	-	-	-	-	-	-
F-A	I503355		C-17	ISI	-	-	-	-	-	-	-
F1.30B	SWU-621 (N732)		GUIDE	AUG	-	-	-	-	-	-	-
3	SW			OWN	-	-	-	-	-	-	-
				PRE	-	-	-	-	-	-	-

Category, ItemNO, Class	Summary / CompID / System	Scope / Method / Procedure	Iso No. Comp. Desc. Code Case		Period 1 00	Period 1 02	Period 2 03	Period 2 05	Period 2 06	Period 3 08	Period 3 09
F-A	I503365	ISI/VT/VT-106	C-17	ISI	-	-	-	-	-	-	s
F1.30B	SWU-622 (N733)		GUIDE	AUG	-	-	-	-	-	-	-
3	SW			OWN	-	-	-	-	-	-	-
				PRE	-	-	-	-	-	-	-
F-A	I503415	ISI/VT/VT-106	C-17	ISI	-	c	-	-	-	-	-
F1.30B	SWU-627 (N738)		GUIDE	AUG	-	-	-	-	-	-	-
3	SW			OWN	-	-	-	-	-	-	-
				PRE	-	-	-	-	-	-	-
F-A	I503425		C-17	ISI	-	-	-	-	-	-	-
F1.30B	SWU-628 (N739)		GUIDE	AUG	-	-	-	-	-	-	-
3	SW			OWN	-	-	-	-	-	-	-
				PRE	-	-	-	-	-	-	-
F-A	I503435		C-17	ISI	-	-	-	-	-	-	-
F1.30B	SWU-629 (N740)		GUIDE	AUG	-	-	-	-	-	-	-
3	SW			OWN	-	-	-	-	-	-	-
				PRE	-	-	-	-	-	-	-
F-A	I503445		C-17	ISI	-	-	-	-	-	-	-
F1.30B	SWU-630 (N741)		GUIDE	AUG	-	-	-	-	-	-	-
3	SW			OWN	-	-	-	-	-	-	-
				PRE	-	-	-	-	-	-	-
F-A	I503625		C-18	ISI	-	-	-	-	-	-	-
F1.30B	SWU-384		RIGID RESTRAINT (IA)	AUG	-	-	-	-	-	-	-
3	SW			OWN	-	-	-	-	-	-	-
				PRE	-	-	-	-	-	-	-
F-A	I503670		C-18	ISI	-	-	-	-	-	-	-
F1.30B	SWU-389		GUIDE	AUG	-	-	-	-	-	-	-
3	SW			OWN	-	-	-	-	-	-	-
				PRE	-	-	-	-	-	-	-
F-A	I503685		C-18	ISI	-	-	-	-	-	-	-
F1.30B	SWU-390		RIGID RESTRAINT (IA)	AUG	-	-	-	-	-	-	-
3	SW			OWN	-	-	-	-	-	-	-
				PRE	-	-	-	-	-	-	-
F-A	I503700		C-18	ISI	-	-	-	-	-	-	-
F1.30B	SWU-392		GUIDE	AUG	-	-	-	-	-	-	-
3	SW			OWN	-	-	-	-	-	-	-
				PRE	-	-	-	-	-	-	-
F-A	I505005		C-1F	ISI	-	-	-	-	-	-	-
F1.30B	AFU-8		GUIDE (IA)	AUG	-	-	-	-	-	-	-
3	AFW			OWN	-	-	-	-	-	-	-
				PRE	-	-	-	-	-	-	-

Category, ItemNO, Class	Summary / CompID / System	Scope / Method / Procedure	Iso No. Comp. Desc. Code Case		Period 1 00	Period 1 02	Period 2 03	Period 2 05	Period 2 06	Period 3 08	Period 3 09
F-A	I505015		C-1F	ISI	-	-	-	-	-	-	-
F1.30B	AFU-9		GUIDE (IA)	AUG	-	-	-	-	-	-	-
3	AFW			OWN	-	-	-	-	-	-	-
				PRE	-	-	-	-	-	-	-
F-A	I505020		C-1F	ISI	-	-	-	-	-	-	-
F1.30B	AFU-10		U-BOLT	AUG	-	-	-	-	-	-	-
3	AFW			OWN	-	-	-	-	-	-	-
				PRE	-	-	-	-	-	-	-
F-A	I505050		C-1F	ISI	-	-	-	-	-	-	-
F1.30B	AFU-13		RIGID RESTRAINT	AUG	-	-	-	-	-	-	-
3	AFW			OWN	-	-	-	-	-	-	-
				PRE	-	-	-	-	-	-	-
F-A	I505070		C-1F	ISI	-	-	-	-	-	-	-
F1.30B	AFU-15		RIGID RESTRAINT	AUG	-	-	-	-	-	-	-
3	AFW			OWN	-	-	-	-	-	-	-
				PRE	-	-	-	-	-	-	-
F-A	I505110		C-1F	ISI	-	-	-	-	-	-	-
F1.30B	AFU-19		RIGID RESTRAINT	AUG	-	-	-	-	-	-	-
3	AFW			OWN	-	-	-	-	-	-	-
				PRE	-	-	-	-	-	-	-
F-A	I505120		C-1F	ISI	-	-	-	-	-	-	-
F1.30B	AFU-20		RIGID RESTRAINT	AUG	-	-	-	-	-	-	-
3	AFW			OWN	-	-	-	-	-	-	-
				PRE	-	-	-	-	-	-	-
F-A	I505150		C-1C	ISI	-	-	-	-	-	-	-
F1.30B	AFU-23		GUIDE	AUG	-	-	-	-	-	-	-
3	AFW			OWN	-	-	-	-	-	-	-
				PRE	-	-	-	-	-	-	-
F-A	I505170		C-1C	ISI	-	-	-	-	-	-	-
F1.30B	AFU-25		U-BOLT	AUG	-	-	-	-	-	-	-
3	AFW			OWN	-	-	-	-	-	-	-
				PRE	-	-	-	-	-	-	-
F-A	I505210		C-1C	ISI	-	-	-	-	-	-	-
F1.30B	AFU-29		GUIDE	AUG	-	-	-	-	-	-	-
3	AFW			OWN	-	-	-	-	-	-	-
				PRE	-	-	-	-	-	-	-
F-A	I505225		C-1C	ISI	-	-	-	-	-	-	-
F1.30B	AFU-99		ANCHOR (IA)	AUG	-	-	-	-	-	-	-
3	AFW			OWN	-	-	-	-	-	-	-
				PRE	-	-	-	-	-	-	-

Category, ItemNO, Class	Summary / CompID / System	Scope / Method / Procedure	Iso No. Comp. Desc. Code Case		Period 1 00	Period 1 02	Period 2 03	Period 2 05	Period 2 06	Period 3 08	Period 3 09
F-A	I505235		C-1C	ISI	-	-	-	-	-	-	-
F1.30B	AFU-100		GUIDE (IA)	AUG	-	-	-	-	-	-	-
3	AFW			OWN	-	-	-	-	-	-	-
				PRE	-	-	-	-	-	-	-
F-A	I505285	ISI/VT/VT-106	C-1E	ISI	c	-	-	-	-	-	-
F1.30B	AFU-30		GUIDE (IA)	AUG	-	-	-	-	-	-	-
3	AFW			OWN	-	-	-	-	-	-	-
				PRE	-	-	-	-	-	-	-
F-A	I505315		C-1E	ISI	-	-	-	-	-	-	-
F1.30B	AFU-33		RIGID RESTRAINT (IA)	AUG	-	-	-	-	-	-	-
3	AFW			OWN	-	-	-	-	-	-	-
				PRE	-	-	-	-	-	-	-
F-A	I505335	ISI/VT/VT-106	C-1D	ISI	c	-	-	-	-	-	-
F1.30B	AFU-35		GUIDE (IA)	AUG	-	-	-	-	-	-	-
3	AFW			OWN	-	-	-	-	-	-	-
				PRE	-	-	-	-	-	-	-
F-A	I505350		C-1D	ISI	-	-	-	-	-	-	-
F1.30B	AFU-37		U-BOLT	AUG	-	-	-	-	-	-	-
3	AFW			OWN	-	-	-	-	-	-	-
				PRE	-	-	-	-	-	-	-
F-A	I505360		C-1D	ISI	-	-	-	-	-	-	-
F1.30B	AFU-38		GUIDE	AUG	-	-	-	-	-	-	-
3	AFW			OWN	-	-	-	-	-	-	-
				PRE	-	-	-	-	-	-	-
F-A	I505370		C-1D	ISI	-	-	-	-	-	-	-
F1.30B	AFU-39		GUIDE	AUG	-	-	-	-	-	-	-
3	AFW			OWN	-	-	-	-	-	-	-
				PRE	-	-	-	-	-	-	-
F-A	I505395		C-1D	ISI	-	-	-	-	-	-	-
F1.30B	AFU-41		GUIDE (IA)	AUG	-	-	-	-	-	-	-
3	AFW			OWN	-	-	-	-	-	-	-
				PRE	-	-	-	-	-	-	-
F-A	I505420		C-1E	ISI	-	-	-	-	-	-	-
F1.30B	AFU-44		GUIDE	AUG	-	-	-	-	-	-	-
3	AFW			OWN	-	-	-	-	-	-	-
				PRE	-	-	-	-	-	-	-
F-A	I505465		C-1A	ISI	-	-	-	-	-	-	-
F1.30B	AFU-48		GUIDE (IA)	AUG	-	-	-	-	-	-	-
3	AFW			OWN	-	-	-	-	-	-	-
				PRE	-	-	-	-	-	-	-

Category, ItemNO, Class	Summary / CompID / System	Scope / Method / Procedure	Iso No. Comp. Desc. Code Case		Period 1 00	Period 1 02	Period 2 03	Period 2 05	Period 2 06	Period 3 08	Period 3 09
F-A	I505475		C-1A	ISI	-	-	-	-	-	-	-
F1.30B	AFU-49		GUIDE (IA)	AUG	-	-	-	-	-	-	-
3	AFW			OWN	-	-	-	-	-	-	-
				PRE	-	-	-	-	-	-	-
F-A	I505480	ISI/VT/VT-106	C-1A	ISI	-	-	-	s	-	-	-
F1.30B	AFU-50		GUIDE	AUG	-	-	-	-	-	-	-
3	AFW			OWN	-	-	-	-	-	-	-
				PRE	-	-	-	-	-	-	-
F-A	I505545		C-1A	ISI	-	-	-	-	-	-	-
F1.30B	AFU-56		GUIDE (IA)	AUG	-	-	-	-	-	-	-
3	AFW			OWN	-	-	-	-	-	-	-
				PRE	-	-	-	-	-	-	-
F-A	I505555		C-1A	ISI	-	-	-	-	-	-	-
F1.30B	AFU-105		ANCHOR (IA)	AUG	-	-	-	-	-	-	-
3	AFW			OWN	-	-	-	-	-	-	-
				PRE	-	-	-	-	-	-	-
F-A	I505560		C-1A	ISI	-	-	-	-	-	-	-
F1.30B	AFU-106		GUIDE	AUG	-	-	-	-	-	-	-
3	AFW			OWN	-	-	-	-	-	-	-
				PRE	-	-	-	-	-	-	-
F-A	I505570		C-1A	ISI	-	-	-	-	-	-	-
F1.30B	AFU-107		RIGID RESTRAINT	AUG	-	-	-	-	-	-	-
3	AFW			OWN	-	-	-	-	-	-	-
				PRE	-	-	-	-	-	-	-
F-A	I505612		C-1	ISI	-	-	-	-	-	-	-
F1.30B	AFU-87		GUIDE	AUG	-	-	-	-	-	-	-
3	AFW			OWN	-	-	-	-	-	-	-
				PRE	-	-	-	-	-	-	-
F-A	I505616		C-1	ISI	-	-	-	-	-	-	-
F1.30B	N960		RIGID HANGER	AUG	-	-	-	-	-	-	-
3	AFW			OWN	-	-	-	-	-	-	-
				PRE	-	-	-	-	-	-	-
F-A	I505625	ISI/VT/VT-106	C-1	ISI	-	-	-	-	-	s	-
F1.30B	AFU-62		RIGID SUPPORT (IA)	AUG	-	-	-	-	-	-	-
3	AFW			OWN	-	-	-	-	-	-	-
				PRE	-	-	-	-	-	-	-
F-A	I505630		C-1	ISI	-	-	-	-	-	-	-
F1.30B	AFU-63		RIGID RESTRAINT	AUG	-	-	-	-	-	-	-
3	AFW			OWN	-	-	-	-	-	-	-
				PRE	-	-	-	-	-	-	-

Category, ItemNO, Class	Summary / CompID / System	Scope / Method / Procedure	Iso No. Comp. Desc. Code Case		Period 1 00	Period 1 02	Period 2 03	Period 2 05	Period 2 06	Period 3 08	Period 3 09
F-A	I505640		C-1	ISI	-	-	-	-	-	-	-
F1.30B	AFU-64		GUIDE	AUG	-	-	-	-	-	-	-
3	AFW			OWN	-	-	-	-	-	-	-
				PRE	-	-	-	-	-	-	-
F-A	I505690		C-1	ISI	-	-	-	-	-	-	-
F1.30B	AFU-69		GUIDE	AUG	-	-	-	-	-	-	-
3	AFW			OWN	-	-	-	-	-	-	-
				PRE	-	-	-	-	-	-	-
F-A	I505725	ISI/VT/VT-106	C-1	ISI	-	-	-	-	-	-	s
F1.30B	AFU-72		RIGID SUPPORT (IA)	AUG	-	-	-	-	-	-	-
3	AFW			OWN	-	-	-	-	-	-	-
				PRE	-	-	-	-	-	-	-
F-A	I505790		C-1B	ISI	-	-	-	-	-	-	-
F1.30B	AFU-79		GUIDE	AUG	-	-	-	-	-	-	-
3	AFW			OWN	-	-	-	-	-	-	-
				PRE	-	-	-	-	-	-	-
F-A	I505815		C-1B	ISI	-	-	-	-	-	-	-
F1.30B	AFU-90		ANCHOR (IA)	AUG	-	-	-	-	-	-	-
3	AFW			OWN	-	-	-	-	-	-	-
				PRE	-	-	-	-	-	-	-
F-A	I505820		C-1B	ISI	-	-	-	-	-	-	-
F1.30B	AFU-91		GUIDE	AUG	-	-	-	-	-	-	-
3	AFW			OWN	-	-	-	-	-	-	-
				PRE	-	-	-	-	-	-	-
F-A	I505845		C-1B	ISI	-	-	-	-	-	-	-
F1.30B	AFU-93		GUIDE (IA)	AUG	-	-	-	-	-	-	-
3	AFW			OWN	-	-	-	-	-	-	-
				PRE	-	-	-	-	-	-	-
F-A	I505850		C-1B	ISI	-	-	-	-	-	-	-
F1.30B	AFU-94		GUIDE	AUG	-	-	-	-	-	-	-
3	AFW			OWN	-	-	-	-	-	-	-
				PRE	-	-	-	-	-	-	-
F-A	I505915	ISI/VT/VT-106	C-1	ISI	-	-	-	-	-	s	-
F1.30B	AFU-82		RIGID SUPPORT (IA)	AUG	-	-	-	-	-	-	-
3	AFW			OWN	-	-	-	-	-	-	-
				PRE	-	-	-	-	-	-	-
F-A	I505965		C-1A	ISI	-	-	-	-	-	-	-
F1.30B	AFU-112		ANCHOR (IA)	AUG	-	-	-	-	-	-	-
3	AFW			OWN	-	-	-	-	-	-	-
				PRE	-	-	-	-	-	-	-

Category, ItemNO, Class	Summary / CompID / System	Scope / Method / Procedure	Iso No. Comp. Desc. Code Case		Period 1 00	Period 1 02	Period 2 03	Period 2 05	Period 2 06	Period 3 08	Period 3 09
F-A	I505970		C-1A	ISI	-	-	-	-	-	-	-
F1.30B	AFU-113		GUIDE	AUG	-	-	-	-	-	-	-
3	AFW			OWN	-	-	-	-	-	-	-
				PRE	-	-	-	-	-	-	-
F-A	I505980		C-1A	ISI	-	-	-	-	-	-	-
F1.30B	AFU-114		GUIDE	AUG	-	-	-	-	-	-	-
3	AFW			OWN	-	-	-	-	-	-	-
				PRE	-	-	-	-	-	-	-
F-A	I505990		C-1A	ISI	-	-	-	-	-	-	-
F1.30B	AFU-115		GUIDE	AUG	-	-	-	-	-	-	-
3	AFW			OWN	-	-	-	-	-	-	-
				PRE	-	-	-	-	-	-	-
F-A	I506000		C-1A	ISI	-	-	-	-	-	-	-
F1.30B	AFU-116		RIGID RESTRAINT	AUG	-	-	-	-	-	-	-
3	AFW			OWN	-	-	-	-	-	-	-
				PRE	-	-	-	-	-	-	-
F-A	I506015		C-1A	ISI	-	-	-	-	-	-	-
F1.30B	AFU-117		GUIDE	AUG	-	-	-	-	-	-	-
3	AFW			OWN	-	-	-	-	-	-	-
				PRE	-	-	-	-	-	-	-
F-A	I506020		C-1A	ISI	-	-	-	-	-	-	-
F1.30B	AFU-118		GUIDE	AUG	-	-	-	-	-	-	-
3	AFW			OWN	-	-	-	-	-	-	-
				PRE	-	-	-	-	-	-	-
F-A	I506050		C-1A	ISI	-	-	-	-	-	-	-
F1.30B	AFU-121		RIGID RESTRAINT	AUG	-	-	-	-	-	-	-
3	AFW			OWN	-	-	-	-	-	-	-
				PRE	-	-	-	-	-	-	-
F-A	I507206	ISI/VT/VT-106	C-21	ISI	c	-	-	-	-	-	-
F1.30B	AFU-231/256 (AFW-51)		GUIDE (IA)	AUG	-	-	-	-	-	-	-
3	SAFW			OWN	-	-	-	-	-	-	-
				PRE	-	-	-	-	-	-	-
F-A	I507215	ISI/VT/VT-106	C-21	ISI	-	c	-	-	-	-	-
F1.30B	AFU-233/258 (AFW-52)		GUIDE (IA)	AUG	-	-	-	-	-	-	-
3	SAFW			OWN	-	-	-	-	-	-	-
				PRE	-	-	-	-	-	-	-
F-A	I507220		C-21	ISI	-	-	-	-	-	-	-
F1.30B	AFU-259 (AFW-72)		U-BOLT	AUG	-	-	-	-	-	-	-
3	SAFW			OWN	-	-	-	-	-	-	-
				PRE	-	-	-	-	-	-	-

Category, ItemNO, Class	Summary / CompID / System	Scope / Method / Procedure	Iso No. Comp. Desc. Code Case		Period 1 00	Period 1 02	Period 2 03	Period 2 05	Period 2 06	Period 3 08	Period 3 09
F-A	I507230	ISI/VT/VT-106	C-21	ISI	-	-	-	-	-	-	s
F1.30B	AFU-260 (AFW-73)		GUIDE (IA)	AUG	-	-	-	-	-	-	-
3	SAFW			OWN	-	-	-	-	-	-	-
				PRE	-	-	-	-	-	-	-
F-A	I507240		C-21	ISI	-	-	-	-	-	-	-
F1.30B	AFU-261 (AFW-74)		U-BOLT	AUG	-	-	-	-	-	-	-
3	SAFW			OWN	-	-	-	-	-	-	-
				PRE	-	-	-	-	-	-	-
F-A	I507250		C-21	ISI	-	-	-	-	-	-	-
F1.30B	AFU-262 (AFW-75)		U-BOLT	AUG	-	-	-	-	-	-	-
3	SAFW			OWN	-	-	-	-	-	-	-
				PRE	-	-	-	-	-	-	-
F-A	I507260		C-21	ISI	-	-	-	-	-	-	-
F1.30B	AFU-263 (AFW-76)		U-BOLT	AUG	-	-	-	-	-	-	-
3	SAFW			OWN	-	-	-	-	-	-	-
				PRE	-	-	-	-	-	-	-
F-A	I507270		C-21	ISI	-	-	-	-	-	-	-
F1.30B	AFU-264 (AFW-77)		U-BOLT	AUG	-	-	-	-	-	-	-
3	SAFW			OWN	-	-	-	-	-	-	-
				PRE	-	-	-	-	-	-	-
F-A	I507280		C-21	ISI	-	-	-	-	-	-	-
F1.30B	AFU-265 (AFW-78)		GUIDE	AUG	-	-	-	-	-	-	-
3	SAFW			OWN	-	-	-	-	-	-	-
				PRE	-	-	-	-	-	-	-
F-A	I507290		C-21	ISI	-	-	-	-	-	-	-
F1.30B	AFU-266 (AFW-79)		GUIDE	AUG	-	-	-	-	-	-	-
3	SAFW			OWN	-	-	-	-	-	-	-
				PRE	-	-	-	-	-	-	-
F-A	I507300		C-21	ISI	-	-	-	-	-	-	-
F1.30B	AFU-267 (AFW-80)		GUIDE	AUG	-	-	-	-	-	-	-
3	SAFW			OWN	-	-	-	-	-	-	-
				PRE	-	-	-	-	-	-	-
F-A	I507310		C-21	ISI	-	-	-	-	-	-	-
F1.30B	AFU-268 (AFW-81)		GUIDE	AUG	-	-	-	-	-	-	-
3	SAFW			OWN	-	-	-	-	-	-	-
				PRE	-	-	-	-	-	-	-
F-A	I507320		C-21	ISI	-	-	-	-	-	-	-
F1.30B	AFU-269 (AFW-82)		GUIDE	AUG	-	-	-	-	-	-	-
3	SAFW			OWN	-	-	-	-	-	-	-
				PRE	-	-	-	-	-	-	-

Category, ItemNO, Class	Summary / CompID / System	Scope / Method / Procedure	Iso No. Comp. Desc. Code Case		Period 1 00	Period 1 02	Period 2 03	Period 2 05	Period 2 06	Period 3 08	Period 3 09
F-A	I507330		C-21	ISI	-	-	-	-	-	-	-
F1.30B	AFU-270 (AFW-83)		GUIDE	AUG	-	-	-	-	-	-	-
3	SAFW			OWN	-	-	-	-	-	-	-
				PRE	-	-	-	-	-	-	-
F-A	I507340		C-21	ISI	-	-	-	-	-	-	-
F1.30B	AFU-271 (AFW-84)		GUIDE	AUG	-	-	-	-	-	-	-
3	SAFW			OWN	-	-	-	-	-	-	-
				PRE	-	-	-	-	-	-	-
F-A	I507350		C-21	ISI	-	-	-	-	-	-	-
F1.30B	AFU-272 (AFW-85)		GUIDE	AUG	-	-	-	-	-	-	-
3	SAFW			OWN	-	-	-	-	-	-	-
				PRE	-	-	-	-	-	-	-
F-A	I507360		C-21	ISI	-	-	-	-	-	-	-
F1.30B	AFU-273 (AFW-86)		RIGID HANGER	AUG	-	-	-	-	-	-	-
3	SAFW			OWN	-	-	-	-	-	-	-
				PRE	-	-	-	-	-	-	-
F-A	I507375		C-21	ISI	-	-	-	-	-	-	-
F1.30B	AFU-274 (AFW-87)		ANCHOR (IA)	AUG	-	-	-	-	-	-	-
3	SAFW			OWN	-	-	-	-	-	-	-
				PRE	-	-	-	-	-	-	-
F-A	I507385	ISI/VT/VT-106	C-21	ISI	c	-	-	-	-	-	-
F1.30B	AFU-165 (AFW-88)		GUIDE (IA)	AUG	-	-	-	-	-	-	-
3	SAFW			OWN	-	-	-	-	-	-	-
				PRE	-	-	-	-	-	-	-
F-A	I507390		C-21	ISI	-	-	-	-	-	-	-
F1.30B	AFU-164 (AFW-89)		GUIDE	AUG	-	-	-	-	-	-	-
3	SAFW			OWN	-	-	-	-	-	-	-
				PRE	-	-	-	-	-	-	-
F-A	I507400		C-21	ISI	-	-	-	-	-	-	-
F1.30B	AFU-163 (AFW-90)		GUIDE	AUG	-	-	-	-	-	-	-
3	SAFW			OWN	-	-	-	-	-	-	-
				PRE	-	-	-	-	-	-	-
F-A	I507410		C-21	ISI	-	-	-	-	-	-	-
F1.30B	AFU-162 (AFW-91)		GUIDE	AUG	-	-	-	-	-	-	-
3	SAFW			OWN	-	-	-	-	-	-	-
				PRE	-	-	-	-	-	-	-
F-A	I507420		C-21	ISI	-	-	-	-	-	-	-
F1.30B	AFU-161 (AFW-92)		GUIDE	AUG	-	-	-	-	-	-	-
3	SAFW			OWN	-	-	-	-	-	-	-
				PRE	-	-	-	-	-	-	-

Category, ItemNO, Class	Summary / CompID / System	Scope / Method / Procedure	Iso No. Comp. Desc. Code Case		Period 1 00	Period 1 02	Period 2 03	Period 2 05	Period 2 06	Period 3 08	Period 3 09
F-A	I507430		C-22	ISI	-	-	-	-	-	-	-
F1.30B	AFU-155 (AFW-96)		GUIDE	AUG	-	-	-	-	-	-	-
3	SAFW			OWN	-	-	-	-	-	-	-
				PRE	-	-	-	-	-	-	-
F-A	I507440	ISI/VT/VT-106	C-22	ISI	-	-	-	-	s	-	-
F1.30B	AFU-154 (AFW-95)		GUIDE	AUG	-	-	-	-	-	-	-
3	SAFW			OWN	-	-	-	-	-	-	-
				PRE	-	-	-	-	-	-	-
F-A	I507455	ISI/VT/VT-106	C-22	ISI	-	-	-	-	-	-	s
F1.30B	AFU-152 (AFW-94)		GUIDE (IA)	AUG	-	-	-	-	-	-	-
3	SAFW			OWN	-	-	-	-	-	-	-
				PRE	-	-	-	-	-	-	-
F-A	I507460		C-22	ISI	-	-	-	-	-	-	-
F1.30B	AFU-151 (AFW-93)		GUIDE	AUG	-	-	-	-	-	-	-
3	SAFW			OWN	-	-	-	-	-	-	-
				PRE	-	-	-	-	-	-	-
F-A	I507470		C-22	ISI	-	-	-	-	-	-	-
F1.30B	AFU-150 (AFW-122)		GUIDE	AUG	-	-	-	-	-	-	-
3	SAFW			OWN	-	-	-	-	-	-	-
				PRE	-	-	-	-	-	-	-
F-A	I507480	ISI/VT/VT-106	C-22	ISI	-	c	-	-	-	-	-
F1.30B	AFU-157 (AFW-118)		ANCHOR (IA)	AUG	-	-	-	-	-	-	-
3	SAFW			OWN	-	-	-	-	-	-	-
				PRE	-	-	-	-	-	-	-
F-A	I507482		C-22A	ISI	-	-	-	-	-	-	-
F1.30B	AFU-166		GUIDE	AUG	-	-	-	-	-	-	-
3	SAFW			OWN	-	-	-	-	-	-	-
				PRE	-	-	-	-	-	-	-
F-A	I507483		C-22A	ISI	-	-	-	-	-	-	-
F1.30B	AFU-167		GUIDE	AUG	-	-	-	-	-	-	-
3	SAFW			OWN	-	-	-	-	-	-	-
				PRE	-	-	-	-	-	-	-
F-A	I507484		C-22A	ISI	-	-	-	-	-	-	-
F1.30B	AFU-168		GUIDE	AUG	-	-	-	-	-	-	-
3	SAFW			OWN	-	-	-	-	-	-	-
				PRE	-	-	-	-	-	-	-
F-A	I507490		C-23	ISI	-	-	-	-	-	-	-
F1.30B	AFU-160 (AFW-97)		GUIDE	AUG	-	-	-	-	-	-	-
3	SAFW			OWN	-	-	-	-	-	-	-
				PRE	-	-	-	-	-	-	-

Category, ItemNO, Class	Summary / CompID / System	Scope / Method / Procedure	Iso No. Comp. Desc. Code Case		Period 1 00	Period 1 02	Period 2 03	Period 2 05	Period 2 06	Period 3 08	Period 3 09
F-A	I507500		C-23	ISI	-	-	-	-	-	-	-
F1.30B	AFU-159 (AFW-98)		GUIDE	AUG	-	-	-	-	-	-	-
3	SAFW			OWN	-	-	-	-	-	-	-
				PRE	-	-	-	-	-	-	-
F-A	I507510		C-23	ISI	-	-	-	-	-	-	-
F1.30B	AFU-156 (AFW-99)		GUIDE	AUG	-	-	-	-	-	-	-
3	SAFW			OWN	-	-	-	-	-	-	-
				PRE	-	-	-	-	-	-	-
F-A	I507520		C-23	ISI	-	-	-	-	-	-	-
F1.30B	AFU-158 (AFW-100)		GUIDE	AUG	-	-	-	-	-	-	-
3	SAFW			OWN	-	-	-	-	-	-	-
				PRE	-	-	-	-	-	-	-
F-A	I507526		C-23	ISI	-	-	-	-	-	-	-
F1.30B	AFU-194 (AFW-100)		ANCHOR (IA)	AUG	-	-	-	-	-	-	-
3	SAFW			OWN	-	-	-	-	-	-	-
				PRE	-	-	-	-	-	-	-
F-A	I507535		C-23	ISI	-	-	-	-	-	-	-
F1.30B	AFU-193 (AFW-101)		ANCHOR (IA)	AUG	-	-	-	-	-	-	-
3	SAFW			OWN	-	-	-	-	-	-	-
				PRE	-	-	-	-	-	-	-
F-A	I507540		C-23	ISI	-	-	-	-	-	-	-
F1.30B	AFU-192 (AFW-102)		GUIDE	AUG	-	-	-	-	-	-	-
3	SAFW			OWN	-	-	-	-	-	-	-
				PRE	-	-	-	-	-	-	-
F-A	I507550		C-23	ISI	-	-	-	-	-	-	-
F1.30B	AFU-195 (AFW-103)		GUIDE	AUG	-	-	-	-	-	-	-
3	SAFW			OWN	-	-	-	-	-	-	-
				PRE	-	-	-	-	-	-	-
F-A	I507560		C-23	ISI	-	-	-	-	-	-	-
F1.30B	AFU-196 (AFW-104)		GUIDE	AUG	-	-	-	-	-	-	-
3	SAFW			OWN	-	-	-	-	-	-	-
				PRE	-	-	-	-	-	-	-
F-A	I507600		C-23	ISI	-	-	-	-	-	-	-
F1.30B	AFU-191 (AFW-105)		GUIDE	AUG	-	-	-	-	-	-	-
3	SAFW			OWN	-	-	-	-	-	-	-
				PRE	-	-	-	-	-	-	-
F-A	I508145	PSI/VT/VT-106	C-25	ISI	-	-	-	-	-	-	-
F1.30B	AFU-231 (AFW-51)		GUIDE (IA)	AUG	-	-	-	-	-	-	-
3	SAFW			OWN	-	-	-	-	-	-	-
				PRE	c	-	-	-	-	-	-

Category, ItemNO, Class	Summary / CompID / System	Scope / Method / Procedure	Iso No. Comp. Desc. Code Case		Period 1 00	Period 1 02	Period 2 03	Period 2 05	Period 2 06	Period 3 08	Period 3 09
F-A	I508148		C-25	ISI	-	-	-	-	-	-	-
F1.30B	AFU-233 (AFW-52)		GUIDE	AUG	-	-	-	-	-	-	-
3	SAFW			OWN	-	-	-	-	-	-	-
				PRE	-	-	-	-	-	-	-
F-A	I508150		C-25	ISI	-	-	-	-	-	-	-
F1.30B	AFU-234 (NEW)		U-BOLT	AUG	-	-	-	-	-	-	-
3	SAFW			OWN	-	-	-	-	-	-	-
				PRE	-	-	-	-	-	-	-
F-A	I508160		C-25	ISI	-	-	-	-	-	-	-
F1.30B	AFU-235 (AFW-53)		GUIDE	AUG	-	-	-	-	-	-	-
3	SAFW			OWN	-	-	-	-	-	-	-
				PRE	-	-	-	-	-	-	-
F-A	I508165		C-25	ISI	-	-	-	-	-	-	-
F1.30B	AFU-236 (AFW-54)		GUIDE	AUG	-	-	-	-	-	-	-
3	SAFW			OWN	-	-	-	-	-	-	-
				PRE	-	-	-	-	-	-	-
F-A	I508170		C-25	ISI	-	-	-	-	-	-	-
F1.30B	AFU-237 (AFW-55)		GUIDE	AUG	-	-	-	-	-	-	-
3	SAFW			OWN	-	-	-	-	-	-	-
				PRE	-	-	-	-	-	-	-
F-A	I508185	ISI/VT/VT-106	C-25	ISI	-	-	-	-	-	-	s
F1.30B	AFU-238 (AFW-56)		GUIDE (IA)	AUG	-	-	-	-	-	-	-
3	SAFW			OWN	-	-	-	-	-	-	-
				PRE	-	-	-	-	-	-	-
F-A	I508190		C-25	ISI	-	-	-	-	-	-	-
F1.30B	AFU-239 (AFW-57)		GUIDE	AUG	-	-	-	-	-	-	-
3	SAFW			OWN	-	-	-	-	-	-	-
				PRE	-	-	-	-	-	-	-
F-A	I508200		C-25	ISI	-	-	-	-	-	-	-
F1.30B	AFU-240 (AFW-58)		GUIDE	AUG	-	-	-	-	-	-	-
3	SAFW			OWN	-	-	-	-	-	-	-
				PRE	-	-	-	-	-	-	-
F-A	I508210		C-25	ISI	-	-	-	-	-	-	-
F1.30B	AFU-241 (AFW-59)		GUIDE	AUG	-	-	-	-	-	-	-
3	SAFW			OWN	-	-	-	-	-	-	-
				PRE	-	-	-	-	-	-	-
F-A	I508220		C-25	ISI	-	-	-	-	-	-	-
F1.30B	AFU-242 (AFW-60)		GUIDE	AUG	-	-	-	-	-	-	-
3	SAFW			OWN	-	-	-	-	-	-	-
				PRE	-	-	-	-	-	-	-

Category, ItemNO, Class	Summary / CompID / System	Scope / Method / Procedure	Iso No. Comp. Desc. Code Case		Period 1 00	Period 1 02	Period 2 03	Period 2 05	Period 2 06	Period 3 08	Period 3 09
F-A	I508230		C-25	ISI	-	-	-	-	-	-	-
F1.30B	AFU-243 (AFW-61)		GUIDE	AUG	-	-	-	-	-	-	-
3	SAFW			OWN	-	-	-	-	-	-	-
				PRE	-	-	-	-	-	-	-
F-A	I508245		C-25	ISI	-	-	-	-	-	-	-
F1.30B	AFU-244 (AFW-62)		GUIDE (IA)	AUG	-	-	-	-	-	-	-
3	SAFW			OWN	-	-	-	-	-	-	-
				PRE	-	-	-	-	-	-	-
F-A	I508250		C-25	ISI	-	-	-	-	-	-	-
F1.30B	AFU-245 (AFW-63)		GUIDE	AUG	-	-	-	-	-	-	-
3	SAFW			OWN	-	-	-	-	-	-	-
				PRE	-	-	-	-	-	-	-
F-A	I508260		C-25	ISI	-	-	-	-	-	-	-
F1.30B	AFU-246 (AFW-64)		GUIDE	AUG	-	-	-	-	-	-	-
3	SAFW			OWN	-	-	-	-	-	-	-
				PRE	-	-	-	-	-	-	-
F-A	I508270		C-25	ISI	-	-	-	-	-	-	-
F1.30B	AFU-247 (AFW-65)		GUIDE	AUG	-	-	-	-	-	-	-
3	SAFW			OWN	-	-	-	-	-	-	-
				PRE	-	-	-	-	-	-	-
F-A	I508280		C-25	ISI	-	-	-	-	-	-	-
F1.30B	AFU-248 (AFW-66)		GUIDE	AUG	-	-	-	-	-	-	-
3	SAFW			OWN	-	-	-	-	-	-	-
				PRE	-	-	-	-	-	-	-
F-A	I508290		C-25	ISI	-	-	-	-	-	-	-
F1.30B	AFU-249 (AFW-67)		GUIDE	AUG	-	-	-	-	-	-	-
3	SAFW			OWN	-	-	-	-	-	-	-
				PRE	-	-	-	-	-	-	-
F-A	I508305		C-25	ISI	-	-	-	-	-	-	-
F1.30B	AFU-250 (AFW-68)		GUIDE (IA)	AUG	-	-	-	-	-	-	-
3	SAFW			OWN	-	-	-	-	-	-	-
				PRE	-	-	-	-	-	-	-
F-A	I508310		C-25	ISI	-	-	-	-	-	-	-
F1.30B	AFU-251 (AFW-69)		GUIDE	AUG	-	-	-	-	-	-	-
3	SAFW			OWN	-	-	-	-	-	-	-
				PRE	-	-	-	-	-	-	-
F-A	I508320		C-25	ISI	-	-	-	-	-	-	-
F1.30B	AFU-252 (AFW-70)		GUIDE	AUG	-	-	-	-	-	-	-
3	SAFW			OWN	-	-	-	-	-	-	-
				PRE	-	-	-	-	-	-	-

Category, ItemNO, Class	Summary / CompID / System	Scope / Method / Procedure	Iso No. Comp. Desc. Code Case		Period 1 00	Period 1 02	Period 2 03	Period 2 05	Period 2 06	Period 3 08	Period 3 09
F-A	I508337		C-25	ISI	-	-	-	-	-	-	-
F1.30B	AFU-254		ANCHOR (IA)	AUG	-	-	-	-	-	-	-
3	SAFW			OWN	-	-	-	-	-	-	-
				PRE	-	-	-	-	-	-	-
F-A	I508345		C-25	ISI	-	-	-	-	-	-	-
F1.30B	AFW-116		ANCHOR (IA)	AUG	-	-	-	-	-	-	-
3	SAFW			OWN	-	-	-	-	-	-	-
				PRE	-	-	-	-	-	-	-
F-A	I508350		C-25	ISI	-	-	-	-	-	-	-
F1.30B	AFU-178 (AFW-115)		GUIDE	AUG	-	-	-	-	-	-	-
3	SAFW			OWN	-	-	-	-	-	-	-
				PRE	-	-	-	-	-	-	-
F-A	I508360		C-25	ISI	-	-	-	-	-	-	-
F1.30B	AFU-179 (AFW-119)		GUIDE	AUG	-	-	-	-	-	-	-
3	SAFW			OWN	-	-	-	-	-	-	-
				PRE	-	-	-	-	-	-	-
F-A	I508370		C-25	ISI	-	-	-	-	-	-	-
F1.30B	AFU-180 (AFW-114)		GUIDE	AUG	-	-	-	-	-	-	-
3	SAFW			OWN	-	-	-	-	-	-	-
				PRE	-	-	-	-	-	-	-
F-A	I508380		C-25	ISI	-	-	-	-	-	-	-
F1.30B	AFU-181 (AFW-113)		GUIDE	AUG	-	-	-	-	-	-	-
3	SAFW			OWN	-	-	-	-	-	-	-
				PRE	-	-	-	-	-	-	-
F-A	I508390		C-25	ISI	-	-	-	-	-	-	-
F1.30B	AFU-182 (AFW-112)		GUIDE	AUG	-	-	-	-	-	-	-
3	SAFW			OWN	-	-	-	-	-	-	-
				PRE	-	-	-	-	-	-	-
F-A	I508400		C-25	ISI	-	-	-	-	-	-	-
F1.30B	AFU-183 (AFW-111)		GUIDE	AUG	-	-	-	-	-	-	-
3	SAFW			OWN	-	-	-	-	-	-	-
				PRE	-	-	-	-	-	-	-
F-A	I508435		C-22	ISI	-	-	-	-	-	-	-
F1.30B	AFU-187 (AFW-121)		GUIDE	AUG	-	-	-	-	-	-	-
3	SAFW			OWN	-	-	-	-	-	-	-
				PRE	-	-	-	-	-	-	-
F-A	I508445	ISI/VT/VT-106	C-22	ISI	-	-	-	-	-	s	-
F1.30B	AFU-188 (AFW-107)		GUIDE (IA)	AUG	-	-	-	-	-	-	-
3	SAFW			OWN	-	-	-	-	-	-	-
				PRE	-	-	-	-	-	-	-

Category, ItemNO, Class	Summary / CompID / System	Scope / Method / Procedure	Iso No. Comp. Desc. Code Case		Period 1 00	Period 1 02	Period 2 03	Period 2 05	Period 2 06	Period 3 08	Period 3 09
F-A	I508450		C-22	ISI	-	-	-	-	-	-	-
F1.30B	AFU-189 (AFW-106)		GUIDE	AUG	-	-	-	-	-	-	-
3	SAFW			OWN	-	-	-	-	-	-	-
				PRE	-	-	-	-	-	-	-
F-A	I508460		C-22	ISI	-	-	-	-	-	-	-
F1.30B	AFU-190 (AFW-123)		GUIDE	AUG	-	-	-	-	-	-	-
3	SAFW			OWN	-	-	-	-	-	-	-
				PRE	-	-	-	-	-	-	-
F-A	I508470		C-22	ISI	-	-	-	-	-	-	-
F1.30B	AFU-171 (AFW-117)		ANCHOR (IA)	AUG	-	-	-	-	-	-	-
3	SAFW			OWN	-	-	-	-	-	-	-
				PRE	-	-	-	-	-	-	-
F-A	I508476		C-22A	ISI	-	-	-	-	-	-	-
F1.30B	AFU-172		GUIDE	AUG	-	-	-	-	-	-	-
3	SAFW			OWN	-	-	-	-	-	-	-
				PRE	-	-	-	-	-	-	-
F-A	I508477		C-22A	ISI	-	-	-	-	-	-	-
F1.30B	AFU-173		GUIDE	AUG	-	-	-	-	-	-	-
3	SAFW			OWN	-	-	-	-	-	-	-
				PRE	-	-	-	-	-	-	-
F-A	I508478		C-22A	ISI	-	-	-	-	-	-	-
F1.30B	AFU-174		GUIDE	AUG	-	-	-	-	-	-	-
3	SAFW			OWN	-	-	-	-	-	-	-
				PRE	-	-	-	-	-	-	-
F-A	I508700		C-26	ISI	-	-	-	-	-	-	-
F1.30B	SWU-536 (SW-95)		RIGID RESTRAINT	AUG	-	-	-	-	-	-	-
3	SAFW			OWN	-	-	-	-	-	-	-
				PRE	-	-	-	-	-	-	-
F-A	I508705		C-26	ISI	-	-	-	-	-	-	-
F1.30B	SWU-537 (SW-96)		GUIDE	AUG	-	-	-	-	-	-	-
3	SAFW			OWN	-	-	-	-	-	-	-
				PRE	-	-	-	-	-	-	-
F-A	I508720		C-26	ISI	-	-	-	-	-	-	-
F1.30B	SWU-540 (SW-99)		GUIDE	AUG	-	-	-	-	-	-	-
3	SAFW			OWN	-	-	-	-	-	-	-
				PRE	-	-	-	-	-	-	-
F-A	I508725		C-26	ISI	-	-	-	-	-	-	-
F1.30B	SWU-541 (SW-100)		GUIDE	AUG	-	-	-	-	-	-	-
3	SAFW			OWN	-	-	-	-	-	-	-
				PRE	-	-	-	-	-	-	-

Category, ItemNO, Class	Summary / CompID / System	Scope / Method / Procedure	Iso No. Comp. Desc. Code Case		Period 1 00	Period 1 02	Period 2 03	Period 2 05	Period 2 06	Period 3 08	Period 3 09
F-A	I508735		C-26	ISI	-	-	-	-	-	-	-
F1.30B	SWU-543 (SW-102)		RIGID HANGER	AUG	-	-	-	-	-	-	-
3	SAFW			OWN	-	-	-	-	-	-	-
				PRE	-	-	-	-	-	-	-
F-A	I508745		C-26	ISI	-	-	-	-	-	-	-
F1.30B	SWU-545 (SW-104)		GUIDE	AUG	-	-	-	-	-	-	-
3	SAFW			OWN	-	-	-	-	-	-	-
				PRE	-	-	-	-	-	-	-
F-A	I508753	ISI/VT/VT-106	C-26	ISI	c	-	-	-	-	-	-
F1.30B	SWU-546 (SW-105)		GUIDE (IA)	AUG	-	-	-	-	-	-	-
3	SAFW			OWN	-	-	-	-	-	-	-
				PRE	-	-	-	-	-	-	-
F-A	I508755		C-26	ISI	-	-	-	-	-	-	-
F1.30B	SWU-547 (SW-106)		GUIDE	AUG	-	-	-	-	-	-	-
3	SAFW			OWN	-	-	-	-	-	-	-
				PRE	-	-	-	-	-	-	-
F-A	I508760		C-26	ISI	-	-	-	-	-	-	-
F1.30B	SWU-548 (SW-107)		GUIDE	AUG	-	-	-	-	-	-	-
3	SAFW			OWN	-	-	-	-	-	-	-
				PRE	-	-	-	-	-	-	-
F-A	I508765		C-26	ISI	-	-	-	-	-	-	-
F1.30B	SWU-549 (SW-108)		GUIDE	AUG	-	-	-	-	-	-	-
3	SAFW			OWN	-	-	-	-	-	-	-
				PRE	-	-	-	-	-	-	-
F-A	I508770		C-26	ISI	-	-	-	-	-	-	-
F1.30B	SWU-550 (SW-109)		GUIDE	AUG	-	-	-	-	-	-	-
3	SAFW			OWN	-	-	-	-	-	-	-
				PRE	-	-	-	-	-	-	-
F-A	I508775		C-26	ISI	-	-	-	-	-	-	-
F1.30B	SWU-551 (SW-110)		GUIDE	AUG	-	-	-	-	-	-	-
3	SAFW			OWN	-	-	-	-	-	-	-
				PRE	-	-	-	-	-	-	-
F-A	I508783		C-26	ISI	-	-	-	-	-	-	-
F1.30B	SWU-552 (SW-111)		GUIDE (IA)	AUG	-	-	-	-	-	-	-
3	SAFW			OWN	-	-	-	-	-	-	-
				PRE	-	-	-	-	-	-	-
F-A	I508785		C-26	ISI	-	-	-	-	-	-	-
F1.30B	SWU-553 (SW-112)		GUIDE	AUG	-	-	-	-	-	-	-
3	SAFW			OWN	-	-	-	-	-	-	-
				PRE	-	-	-	-	-	-	-

Category, ItemNO, Class	Summary / CompID / System	Scope / Method / Procedure	Iso No. Comp. Desc. Code Case		Period 1 00	Period 1 02	Period 2 03	Period 2 05	Period 2 06	Period 3 08	Period 3 09
F-A	I508793		C-26	ISI	-	-	-	-	-	-	-
F1.30B	SWU-585 (SW-117)		ANCHOR (IA)	AUG	-	-	-	-	-	-	-
3	SAFW			OWN	-	-	-	-	-	-	-
				PRE	-	-	-	-	-	-	-
F-A	I508795		C-26	ISI	-	-	-	-	-	-	-
F1.30B	SWU-586 (SW-118)		GUIDE	AUG	-	-	-	-	-	-	-
3	SAFW			OWN	-	-	-	-	-	-	-
				PRE	-	-	-	-	-	-	-
F-A	I508805		C-26	ISI	-	-	-	-	-	-	-
F1.30B	SWU-588 (SW-120)		GUIDE	AUG	-	-	-	-	-	-	-
3	SAFW			OWN	-	-	-	-	-	-	-
				PRE	-	-	-	-	-	-	-
F-A	I508810		C-26	ISI	-	-	-	-	-	-	-
F1.30B	SWU-589 (SW-121)		GUIDE	AUG	-	-	-	-	-	-	-
3	SAFW			OWN	-	-	-	-	-	-	-
				PRE	-	-	-	-	-	-	-
F-A	I508817		C-28	ISI	-	-	-	-	-	-	-
F1.30B	SWU-590 (SW-122)		GUIDE (IA)	AUG	-	-	-	-	-	-	-
3	SAFW			OWN	-	-	-	-	-	-	-
				PRE	-	-	-	-	-	-	-
F-A	I508820		C-28	ISI	-	-	-	-	-	-	-
F1.30B	SWU-591 (SW-123)		GUIDE	AUG	-	-	-	-	-	-	-
3	SAFW			OWN	-	-	-	-	-	-	-
				PRE	-	-	-	-	-	-	-
F-A	I508825		C-28	ISI	-	-	-	-	-	-	-
F1.30B	SWU-592 (SW-124)		GUIDE	AUG	-	-	-	-	-	-	-
3	SAFW			OWN	-	-	-	-	-	-	-
				PRE	-	-	-	-	-	-	-
F-A	I508830		C-28	ISI	-	-	-	-	-	-	-
F1.30B	SWU-593 (SW-125)		GUIDE	AUG	-	-	-	-	-	-	-
3	SAFW			OWN	-	-	-	-	-	-	-
				PRE	-	-	-	-	-	-	-
F-A	I508835		C-28	ISI	-	-	-	-	-	-	-
F1.30B	SWU-594 (SW-126)		GUIDE	AUG	-	-	-	-	-	-	-
3	SAFW			OWN	-	-	-	-	-	-	-
				PRE	-	-	-	-	-	-	-
F-A	I508840		C-28	ISI	-	-	-	-	-	-	-
F1.30B	SWU-595 (SW-127)		GUIDE	AUG	-	-	-	-	-	-	-
3	SAFW			OWN	-	-	-	-	-	-	-
				PRE	-	-	-	-	-	-	-

Category, ItemNO, Class	Summary / CompID / System	Scope / Method / Procedure	Iso No. Comp. Desc. Code Case		Period 1 00	Period 1 02	Period 2 03	Period 2 05	Period 2 06	Period 3 08	Period 3 09
F-A	I508847		C-28	ISI	-	-	-	-	-	-	-
F1.30B	SWU-596 (SW-128)		GUIDE (IA)	AUG	-	-	-	-	-	-	-
3	SAFW			OWN	-	-	-	-	-	-	-
				PRE	-	-	-	-	-	-	-
F-A	I508850		C-28	ISI	-	-	-	-	-	-	-
F1.30B	SWU-597 (SW-129)		GUIDE	AUG	-	-	-	-	-	-	-
3	SAFW			OWN	-	-	-	-	-	-	-
				PRE	-	-	-	-	-	-	-
F-A	I508863	ISI/VT/VT-106	C-27	ISI	c	-	-	-	-	-	-
F1.30B	SWU-500 (SW-88)		GUIDE (IA)	AUG	-	-	-	-	-	-	-
3	SAFW			OWN	-	-	-	-	-	-	-
				PRE	-	-	-	-	-	-	-
F-A	I508865		C-27	ISI	-	-	-	-	-	-	-
F1.30B	SWU-501 (SW-89)		GUIDE	AUG	-	-	-	-	-	-	-
3	SAFW			OWN	-	-	-	-	-	-	-
				PRE	-	-	-	-	-	-	-
F-A	I508873	ISI/VT/VT-106	C-27	ISI	-	c	-	-	-	-	-
F1.30B	SWU-502 (SW-90)		GUIDE (IA)	AUG	-	-	-	-	-	-	-
3	SAFW			OWN	-	-	-	-	-	-	-
				PRE	-	-	-	-	-	-	-
F-A	I508875		C-27	ISI	-	-	-	-	-	-	-
F1.30B	SWU-503 (SW-91)		GUIDE	AUG	-	-	-	-	-	-	-
3	SAFW			OWN	-	-	-	-	-	-	-
				PRE	-	-	-	-	-	-	-
F-A	I508890		C-27	ISI	-	-	-	-	-	-	-
F1.30B	SWU-506 (SW-93)		GUIDE	AUG	-	-	-	-	-	-	-
3	SAFW			OWN	-	-	-	-	-	-	-
				PRE	-	-	-	-	-	-	-
F-A	I508903		C-27	ISI	-	-	-	-	-	-	-
F1.30B	SWU-508 (SW-116)		ANCHOR (IA)	AUG	-	-	-	-	-	-	-
3	SAFW			OWN	-	-	-	-	-	-	-
				PRE	-	-	-	-	-	-	-
F-A	I508905		C-27	ISI	-	-	-	-	-	-	-
F1.30B	SWU-509 (SW-147)		GUIDE	AUG	-	-	-	-	-	-	-
3	SAFW			OWN	-	-	-	-	-	-	-
				PRE	-	-	-	-	-	-	-
F-A	I508910		C-27	ISI	-	-	-	-	-	-	-
F1.30B	SWU-510 (SW-146)		GUIDE	AUG	-	-	-	-	-	-	-
3	SAFW			OWN	-	-	-	-	-	-	-
				PRE	-	-	-	-	-	-	-

Category, ItemNO, Class	Summary / CompID / System	Scope / Method / Procedure	Iso No. Comp. Desc. Code Case		Period 1 00	Period 1 02	Period 2 03	Period 2 05	Period 2 06	Period 3 08	Period 3 09
F-A	I508915		C-27	ISI	-	-	-	-	-	-	-
F1.30B	SWU-511 (SW-145)		GUIDE	AUG	-	-	-	-	-	-	-
3	SAFW			OWN	-	-	-	-	-	-	-
				PRE	-	-	-	-	-	-	-
F-A	I508920		C-27	ISI	-	-	-	-	-	-	-
F1.30B	SWU-512 (SW-144)		GUIDE	AUG	-	-	-	-	-	-	-
3	SAFW			OWN	-	-	-	-	-	-	-
				PRE	-	-	-	-	-	-	-
F-A	I508925		C-28	ISI	-	-	-	-	-	-	-
F1.30B	SWU-513 (SW-143)		GUIDE	AUG	-	-	-	-	-	-	-
3	SAFW			OWN	-	-	-	-	-	-	-
				PRE	-	-	-	-	-	-	-
F-A	I508933		C-28	ISI	-	-	-	-	-	-	-
F1.30B	SWU-514 (SW-142)		GUIDE (IA)	AUG	-	-	-	-	-	-	-
3	SAFW			OWN	-	-	-	-	-	-	-
				PRE	-	-	-	-	-	-	-
F-A	I508935		C-28	ISI	-	-	-	-	-	-	-
F1.30B	SWU-515 (SW-141)		GUIDE	AUG	-	-	-	-	-	-	-
3	SAFW			OWN	-	-	-	-	-	-	-
				PRE	-	-	-	-	-	-	-
F-A	I508940		C-28	ISI	-	-	-	-	-	-	-
F1.30B	SWU-518 (SW-136)		GUIDE	AUG	-	-	-	-	-	-	-
3	SAFW			OWN	-	-	-	-	-	-	-
				PRE	-	-	-	-	-	-	-
F-A	I508945		C-28	ISI	-	-	-	-	-	-	-
F1.30B	SWU-519 (SW-137)		GUIDE	AUG	-	-	-	-	-	-	-
3	SAFW			OWN	-	-	-	-	-	-	-
				PRE	-	-	-	-	-	-	-
F-A	I508950		C-28	ISI	-	-	-	-	-	-	-
F1.30B	SWU-520 (SW-138)		GUIDE	AUG	-	-	-	-	-	-	-
3	SAFW			OWN	-	-	-	-	-	-	-
				PRE	-	-	-	-	-	-	-
F-A	I508958		C-28	ISI	-	-	-	-	-	-	-
F1.30B	SWU-521 (SW-139)		GUIDE (IA)	AUG	-	-	-	-	-	-	-
3	SAFW			OWN	-	-	-	-	-	-	-
				PRE	-	-	-	-	-	-	-
F-A	I508960		C-28	ISI	-	-	-	-	-	-	-
F1.30B	SWU-522 (SW-140)		GUIDE	AUG	-	-	-	-	-	-	-
3	SAFW			OWN	-	-	-	-	-	-	-
				PRE	-	-	-	-	-	-	-

Category, ItemNO, Class	Summary / CompID / System	Scope / Method / Procedure	Iso No. Comp. Desc. Code Case		Period 1 00	Period 1 02	Period 2 03	Period 2 05	Period 2 06	Period 3 08	Period 3 09
F-A	I508970		C-29	ISI	-	-	-	-	-	-	-
F1.30B	SWU-598 (SW-130)		GUIDE	AUG	-	-	-	-	-	-	-
3	SAFW			OWN	-	-	-	-	-	-	-
				PRE	-	-	-	-	-	-	-
F-A	I508977	ISI/VT/VT-106	C-29	ISI	c	-	-	-	-	-	-
F1.30B	SWU-599 (SW-131)		GUIDE (IA)	AUG	-	-	-	-	-	-	-
3	SAFW			OWN	-	-	-	-	-	-	-
				PRE	-	-	-	-	-	-	-
F-A	I508980		C-29	ISI	-	-	-	-	-	-	-
F1.30B	SWU-600 (SW-132)		GUIDE	AUG	-	-	-	-	-	-	-
3	SAFW			OWN	-	-	-	-	-	-	-
				PRE	-	-	-	-	-	-	-
F-A	I508987		C-29	ISI	-	-	-	-	-	-	-
F1.30B	SWU-601 (SW-133)		ANCHOR (IA)	AUG	-	-	-	-	-	-	-
3	SAFW			OWN	-	-	-	-	-	-	-
				PRE	-	-	-	-	-	-	-
F-A	I508993		C-29	ISI	-	-	-	-	-	-	-
F1.30B	SWU-517 (SW-134)		GUIDE (IA)	AUG	-	-	-	-	-	-	-
3	SAFW			OWN	-	-	-	-	-	-	-
				PRE	-	-	-	-	-	-	-
F-A	I508995		C-29	ISI	-	-	-	-	-	-	-
F1.30B	SWU-516 (SW-135)		GUIDE	AUG	-	-	-	-	-	-	-
3	SAFW			OWN	-	-	-	-	-	-	-
				PRE	-	-	-	-	-	-	-
F-A	I509015		C-32	ISI	-	-	-	-	-	-	-
F1.30B	MSU-63		ANCHOR (IA)	AUG	-	-	-	-	-	-	-
3	MS			OWN	-	-	-	-	-	-	-
				PRE	-	-	-	-	-	-	-
F-A	I509045		C-32	ISI	-	-	-	-	-	-	-
F1.30B	MSU-66		GUIDE (IA)	AUG	-	-	-	-	-	-	-
3	MS			OWN	-	-	-	-	-	-	-
				PRE	-	-	-	-	-	-	-
F-A	I509055		C-32	ISI	-	-	-	-	-	-	-
F1.30B	MSU-67		GUIDE (IA)	AUG	-	-	-	-	-	-	-
3	MS			OWN	-	-	-	-	-	-	-
				PRE	-	-	-	-	-	-	-
F-A	I509085		C-32	ISI	-	-	-	-	-	-	-
F1.30B	MSU-70		GUIDE (IA)	AUG	-	-	-	-	-	-	-
3	MS			OWN	-	-	-	-	-	-	-
				PRE	-	-	-	-	-	-	-

Category, ItemNO, Class	Summary / CompID / System	Scope / Method / Procedure	Iso No. Comp. Desc. Code Case		Period 1 00	Period 1 02	Period 2 03	Period 2 05	Period 2 06	Period 3 08	Period 3 09
F-A	I509095	ISI/VT/VT-106	C-32	ISI	c	-	-	-	-	-	-
F1.30B	MSU-71		GUIDE (IA)	AUG	-	-	-	-	-	-	-
3	MS			OWN	-	-	-	-	-	-	-
				PRE	-	-	-	-	-	-	-
F-A	I509115		C-32	ISI	-	-	-	-	-	-	-
F1.30B	MSU-73		RIGID RESTRAINT (IA)	AUG	-	-	-	-	-	-	-
3	MS			OWN	-	-	-	-	-	-	-
				PRE	-	-	-	-	-	-	-
F-A	I509155		C-32	ISI	-	-	-	-	-	-	-
F1.30B	MSU-77		GUIDE (IA)	AUG	-	-	-	-	-	-	-
3	MS			OWN	-	-	-	-	-	-	-
				PRE	-	-	-	-	-	-	-
F-A	I509190		C-32	ISI	-	-	-	-	-	-	-
F1.30B	MSU-81		GUIDE	AUG	-	-	-	-	-	-	-
3	MS			OWN	-	-	-	-	-	-	-
				PRE	-	-	-	-	-	-	-
F-A	I509215		C-32	ISI	-	-	-	-	-	-	-
F1.30B	MSU-83		GUIDE (IA)	AUG	-	-	-	-	-	-	-
3	MS			OWN	-	-	-	-	-	-	-
				PRE	-	-	-	-	-	-	-
F-A	I510030		C-1G	ISI	-	-	-	-	-	-	-
F1.30B	AFU-59		GUIDE	AUG	-	-	-	-	-	-	-
3	AFW			OWN	-	-	-	-	-	-	-
				PRE	-	-	-	-	-	-	-
F-A	I510040		C-1G	ISI	-	-	-	-	-	-	-
F1.30B	AFU-60		GUIDE (IA)	AUG	-	-	-	-	-	-	-
3	AFW			OWN	-	-	-	-	-	-	-
				PRE	-	-	-	-	-	-	-
F-A	I510050		C-1G	ISI	-	-	-	-	-	-	-
F1.30B	AFU-133		GUIDE (IA)	AUG	-	-	-	-	-	-	-
3	AFW			OWN	-	-	-	-	-	-	-
				PRE	-	-	-	-	-	-	-
F-A	I510060		C-1G	ISI	-	-	-	-	-	-	-
F1.30B	AFU-140		GUIDE (IA)	AUG	-	-	-	-	-	-	-
3	AFW			OWN	-	-	-	-	-	-	-
				PRE	-	-	-	-	-	-	-
F-A	I510070		C-1H	ISI	-	-	-	-	-	-	-
F1.30B	AFU-128		GUIDE (IA)	AUG	-	-	-	-	-	-	-
3	AFW			OWN	-	-	-	-	-	-	-
				PRE	-	-	-	-	-	-	-

Category, ItemNO, Class	Summary / CompID / System	Scope / Method / Procedure	Iso No. Comp. Desc. Code Case		Period 1 00	Period 1 02	Period 2 03	Period 2 05	Period 2 06	Period 3 08	Period 3 09
F-A	I510090		C-1H	ISI	-	-	-	-	-	-	-
F1.30B	AFU-57		GUIDE	AUG	-	-	-	-	-	-	-
3	AFW			OWN	-	-	-	-	-	-	-
				PRE	-	-	-	-	-	-	-
F-A	I510100		C-1H	ISI	-	-	-	-	-	-	-
F1.30B	AFU-58		GUIDE (IA)	AUG	-	-	-	-	-	-	-
3	AFW			OWN	-	-	-	-	-	-	-
				PRE	-	-	-	-	-	-	-
F-A	I510110		C-1H	ISI	-	-	-	-	-	-	-
F1.30B	AFU-127		GUIDE (IA)	AUG	-	-	-	-	-	-	-
3	AFW			OWN	-	-	-	-	-	-	-
				PRE	-	-	-	-	-	-	-
F-A	I500108	ISI/VT/VT-106	C-39	ISI	-	-	-	-	-	-	s
F1.30C	DGEX-1A		VARIABLE SPRING (IA)	AUG	-	-	-	-	-	-	-
3	DG			OWN	-	-	-	-	-	-	-
				PRE	-	-	-	-	-	-	-
F-A	I500118		C-40	ISI	-	-	-	-	-	-	-
F1.30C	DGEX-1B		VARIABLE SPRING (IA)	AUG	-	-	-	-	-	-	-
3	DG			OWN	-	-	-	-	-	-	-
				PRE	-	-	-	-	-	-	-
F-A	I500465		C-3	ISI	-	-	-	-	-	-	-
F1.30C	CCU-179		VARIABLE SPRING (IA)	AUG	-	-	-	-	-	-	-
3	AC			OWN	-	-	-	-	-	-	-
				PRE	-	-	-	-	-	-	-
F-A	I500775		C-6	ISI	-	-	-	-	-	-	-
F1.30C	CCU-158		VARIABLE SPRING (IA)	AUG	-	-	-	-	-	-	-
3	AC			OWN	-	-	-	-	-	-	-
				PRE	-	-	-	-	-	-	-
F-A	I500795	ISI/VT/VT-106	C-6	ISI	-	-	c	-	-	-	-
F1.30C	CCU-160		VARIABLE SPRING (IA)	AUG	-	-	-	-	-	-	-
3	AC			OWN	-	-	-	-	-	-	-
				PRE	-	-	-	-	-	-	-
F-A	I500800		C-6	ISI	-	-	-	-	-	-	-
F1.30C	CCU-165		VARIABLE SPRING	AUG	-	-	-	-	-	-	-
3	AC			OWN	-	-	-	-	-	-	-
				PRE	-	-	-	-	-	-	-
F-A	I500825		C-6	ISI	-	-	-	-	-	-	-
F1.30C	CCU-167		VARIABLE SPRING (IA)	AUG	-	-	-	-	-	-	-
3	AC			OWN	-	-	-	-	-	-	-
				PRE	-	-	-	-	-	-	-

Category, ItemNO, Class	Summary / CompID / System	Scope / Method / Procedure	Iso No. Comp. Desc. Code Case		Period 1 00	Period 1 02	Period 2 03	Period 2 05	Period 2 06	Period 3 08	Period 3 09
F-A	I500845		C-6	ISI	-	-	-	-	-	-	-
F1.30C	CCU-169		VARIABLE SPRING (IA)	AUG	-	-	-	-	-	-	-
3	AC			OWN	-	-	-	-	-	-	-
				PRE	-	-	-	-	-	-	-
F-A	I502300		C-13	ISI	-	-	-	-	-	-	-
F1.30C	SWU-254		MECHANICAL SNUBBER	AUG	-	-	-	-	-	-	-
3	SW			OWN	-	-	-	-	-	-	-
				PRE	-	-	-	-	-	-	-
F-A	I502780		C-16	ISI	-	-	-	-	-	-	-
F1.30C	SWU-322		VARIABLE SPRING	AUG	-	-	-	-	-	-	-
3	SW			OWN	-	-	-	-	-	-	-
				PRE	-	-	-	-	-	-	-
F-A	I502810		C-16	ISI	-	-	-	-	-	-	-
F1.30C	SWU-325		VARIABLE SPRING	AUG	-	-	-	-	-	-	-
3	SW			OWN	-	-	-	-	-	-	-
				PRE	-	-	-	-	-	-	-
F-A	I502830	ISI/VT/VT-106	C-16	ISI	-	-	-	-	-	-	s
F1.30C	SWU-327		VARIABLE SPRING (IA)	AUG	-	-	-	-	-	-	-
3	SW			OWN	-	-	-	-	-	-	-
				PRE	-	-	-	-	-	-	-
F-A	I503050		C-16B	ISI	-	-	-	-	-	-	-
F1.30C	SWU-370		MECHANICAL SNUBBER	AUG	-	-	-	-	-	-	-
3	SW			OWN	-	-	-	-	-	-	-
				PRE	-	-	-	-	-	-	-
F-A	I505035	ISI/VT/VT-106	C-1F	ISI	-	-	c	-	-	-	-
F1.30C	AFU-11		VARIABLE SPRING (IA)	AUG	-	-	-	-	-	-	-
3	AFW			OWN	-	-	-	-	-	-	-
				PRE	-	-	-	-	-	-	-
F-A	I505240	ISI/VT/VT-106	C-1C	ISI	-	-	-	s	-	-	-
F1.30C	AFU-101		MECHANICAL SNUBBER	AUG	-	-	-	-	-	-	-
3	AFW			OWN	-	-	-	-	-	-	-
				PRE	-	-	-	-	-	-	-
F-A	I505260		C-1C	ISI	-	-	-	-	-	-	-
F1.30C	AFU-103		MECHANICAL SNUBBER	AUG	-	-	-	-	-	-	-
3	AFW			OWN	-	-	-	-	-	-	-
				PRE	-	-	-	-	-	-	-
F-A	I505290		C-1E	ISI	-	-	-	-	-	-	-
F1.30C	AFU-31		MECHANICAL SNUBBER	AUG	-	-	-	-	-	-	-
3	AFW			OWN	-	-	-	-	-	-	-
				PRE	-	-	-	-	-	-	-

Category, ItemNO, Class	Summary / CompID / System	Scope / Method / Procedure	Iso No. Comp. Desc. Code Case		Period 1 00	Period 1 02	Period 2 03	Period 2 05	Period 2 06	Period 3 08	Period 3 09
F-A	I505320		C-1E	ISI	-	-	-	-	-	-	-
F1.30C	AFU-34		MECHANICAL SNUBBER	AUG	-	-	-	-	-	-	-
3	AFW			OWN	-	-	-	-	-	-	-
				PRE	-	-	-	-	-	-	-
F-A	I505430		C-1E	ISI	-	-	-	-	-	-	-
F1.30C	AFU-45		VARIABLE SPRING	AUG	-	-	-	-	-	-	-
3	AFW			OWN	-	-	-	-	-	-	-
				PRE	-	-	-	-	-	-	-
F-A	I505440		C-1E	ISI	-	-	-	-	-	-	-
F1.30C	AFU-46		VARIABLE SPRING	AUG	-	-	-	-	-	-	-
3	AFW			OWN	-	-	-	-	-	-	-
				PRE	-	-	-	-	-	-	-
F-A	I505490		C-1A	ISI	-	-	-	-	-	-	-
F1.30C	AFU-51		VARIABLE SPRING	AUG	-	-	-	-	-	-	-
3	AFW			OWN	-	-	-	-	-	-	-
				PRE	-	-	-	-	-	-	-
F-A	I505500		C-1A	ISI	-	-	-	-	-	-	-
F1.30C	AFU-52		MECHANICAL SNUBBER	AUG	-	-	-	-	-	-	-
3	AFW			OWN	-	-	-	-	-	-	-
				PRE	-	-	-	-	-	-	-
F-A	I505585		C-1A	ISI	-	-	-	-	-	-	-
F1.30C	AFU-108		VARIABLE SPRING (IA)	AUG	-	-	-	-	-	-	-
3	AFW			OWN	-	-	-	-	-	-	-
				PRE	-	-	-	-	-	-	-
F-A	I505750		C-1B	ISI	-	-	-	-	-	-	-
F1.30C	AFU-75		MECHANICAL SNUBBER	AUG	-	-	-	-	-	-	-
3	AFW			OWN	-	-	-	-	-	-	-
				PRE	-	-	-	-	-	-	-
F-A	I505760		C-1B	ISI	-	-	-	-	-	-	-
F1.30C	AFU-76		VARIABLE SPRING	AUG	-	-	-	-	-	-	-
3	AFW			OWN	-	-	-	-	-	-	-
				PRE	-	-	-	-	-	-	-
F-A	I505880		C-1B	ISI	-	-	-	-	-	-	-
F1.30C	AFU-97		VARIABLE SPRING	AUG	-	-	-	-	-	-	-
3	AFW			OWN	-	-	-	-	-	-	-
				PRE	-	-	-	-	-	-	-
F-A	I506060		C-1A	ISI	-	-	-	-	-	-	-
F1.30C	AFU-122		VARIABLE SPRING	AUG	-	-	-	-	-	-	-
3	AFW			OWN	-	-	-	-	-	-	-
				PRE	-	-	-	-	-	-	-

Category, ItemNO, Class	Summary / CompID / System	Scope / Method / Procedure	Iso No. Comp. Desc. Code Case		Period 1 00	Period 1 02	Period 2 03	Period 2 05	Period 2 06	Period 3 08	Period 3 09
F-A	I508520		C-16	ISI	-	-	-	-	-	-	-
F1.30C	AFU-3		MECHANICAL SNUBBER	AUG	-	-	-	-	-	-	-
3	AFW			OWN	-	-	-	-	-	-	-
				PRE	-	-	-	-	-	-	-
F-A	I509035		C-32	ISI	-	-	-	-	-	-	-
F1.30C	MSU-65		VARIABLE SPRING (IA)	AUG	-	-	-	-	-	-	-
3	MS			OWN	-	-	-	-	-	-	-
				PRE	-	-	-	-	-	-	-
F-A	I509100		C-32	ISI	-	-	-	-	-	-	-
F1.30C	MSU-72		MECHANICAL SNUBBER	AUG	-	-	-	-	-	-	-
3	MS			OWN	-	-	-	-	-	-	-
				PRE	-	-	-	-	-	-	-
F-A	I509120		C-32	ISI	-	-	-	-	-	-	-
F1.30C	MSU-74		MECHANICAL SNUBBER	AUG	-	-	-	-	-	-	-
3	MS			OWN	-	-	-	-	-	-	-
				PRE	-	-	-	-	-	-	-
F-A	I509165		C-32	ISI	-	-	-	-	-	-	-
F1.30C	MSU-78		MECHANICAL SNUBBER (IA)	AUG	-	-	-	-	-	-	-
3	MS			OWN	-	-	-	-	-	-	-
				PRE	-	-	-	-	-	-	-
F-A	I509170		C-32	ISI	-	-	-	-	-	-	-
F1.30C	MSU-79		VARIABLE SPRING	AUG	-	-	-	-	-	-	-
3	MS			OWN	-	-	-	-	-	-	-
				PRE	-	-	-	-	-	-	-
F-A	I509180		C-32	ISI	-	-	-	-	-	-	-
F1.30C	MSU-80		MECHANICAL SNUBBER	AUG	-	-	-	-	-	-	-
3	MS			OWN	-	-	-	-	-	-	-
				PRE	-	-	-	-	-	-	-
F-A	I509200		C-32	ISI	-	-	-	-	-	-	-
F1.30C	MSU-82		MECHANICAL SNUBBER	AUG	-	-	-	-	-	-	-
3	MS			OWN	-	-	-	-	-	-	-
				PRE	-	-	-	-	-	-	-
F-A	I509225	ISI/VT/VT-106	C-32	ISI	-	c	-	-	-	-	-
F1.30C	MSU-84		MECHANICAL SNUBBER (IA)	AUG	-	-	-	-	-	-	-
3	MS			OWN	-	-	-	-	-	-	-
				PRE	-	-	-	-	-	-	-
F-A	I003610		A-1	ISI	-	-	-	-	-	-	s
F1.40	N1A SUPPORT PAD		RPV NOZZLE SUPPORT PAD	AUG	-	-	-	-	-	-	-
1	RPV			OWN	-	-	-	-	-	-	-
				PRE	-	-	-	-	-	-	-

Category, ItemNO, Class	Summary / CompID / System	Scope / Method / Procedure	Iso No. Comp. Desc. Code Case		Period 1 00	Period 1 02	Period 2 03	Period 2 05	Period 2 06	Period 3 08	Period 3 09
F-A	I003620		A-1	ISI	-	-	-	-	-	-	s
F1.40	N2A SUPPORT PAD		RPV NOZZLE SUPPORT PAD	AUG	-	-	-	-	-	-	-
1	RPV			OWN	-	-	-	-	-	-	-
				PRE	-	-	-	-	-	-	-
F-A	I003630		A-1	ISI	-	-	-	-	-	-	s
F1.40	N1B SUPPORT PAD		RPV NOZZLE SUPPORT PAD	AUG	-	-	-	-	-	-	-
1	RPV			OWN	-	-	-	-	-	-	-
				PRE	-	-	-	-	-	-	-
F-A	I003640		A-1	ISI	-	-	-	-	-	-	s
F1.40	N2B SUPPORT PAD		RPV NOZZLE SUPPORT PAD	AUG	-	-	-	-	-	-	-
1	RPV			OWN	-	-	-	-	-	-	-
				PRE	-	-	-	-	-	-	-
F-A	I005410	OWN/VT/VT-106	A-4	ISI	-	-	-	-	-	s	-
F1.40	PRZSSW		PZR SUPPORT (IA)	AUG	-	-	-	-	-	-	-
1	PZR			OWN	-	-	c	-	-	-	-
				PRE	-	-	-	-	-	-	-
F-A	I006609		A-6	ISI	-	-	-	-	-	-	-
F1.40	SGA-SL		SUPPORT COMPONENT- LEGS A TO D	AUG	-	-	-	-	-	-	-
1	SG			OWN	-	-	-	-	-	-	-
				PRE	-	-	-	-	-	-	-
F-A	I006641		A-7F	ISI	-	-	-	-	-	-	-
F1.40	SGA-MS		MID SUPPORT	AUG	-	-	-	-	-	-	-
1	SG			OWN	-	-	-	-	-	-	-
				PRE	-	-	-	-	-	-	-
F-A	I006644		A-7F	ISI	-	-	-	-	-	-	-
F1.40	SGA-RS		RING SUPPORT	AUG	-	-	-	-	-	-	-
1	SG			OWN	-	-	-	-	-	-	-
				PRE	-	-	-	-	-	-	-
F-A	I007609	ISI/VT/VT-106	A-6	ISI	-	-	-	-	-	s	-
F1.40	SGB-SL		SUPPORT COMPONENT LEGS H TO K	AUG	-	-	-	-	-	-	-
1	SG			OWN	-	-	-	-	-	-	-
				PRE	-	-	-	-	-	-	-
F-A	I007641	ISI/VT/VT-106	A-7F	ISI	-	-	-	-	-	s	-
F1.40	SGB-MS		MID SUPPORT	AUG	-	-	-	-	-	-	-
1	SG			OWN	-	-	-	-	-	-	-
				PRE	-	-	-	-	-	-	-
F-A	I007644	ISI/VT/VT-106	A-7F	ISI	-	-	-	-	-	s	-
F1.40	SGB-RS		RING SUPPORT	AUG	-	-	-	-	-	-	-
1	SG			OWN	-	-	-	-	-	-	-
				PRE	-	-	-	-	-	-	-

Category, ItemNO, Class	Summary / CompID / System	Scope / Method / Procedure	Iso No. Comp. Desc. Code Case		Period 1 00	Period 1 02	Period 2 03	Period 2 05	Period 2 06	Period 3 08	Period 3 09
F-A	I008000	ISI/VT/VT-106	A-8	ISI	-	c	-	-	-	-	-
F1.40	RHE-2-PR1		HANGER	AUG	-	-	-	-	-	-	-
1	CVCS-LTDN			OWN	-	-	-	-	-	-	-
				PRE	-	-	-	-	-	-	-
F-A	I008100	ISI/VT/VT-106	A-8	ISI	-	c	-	-	-	-	-
F1.40	RHE-2-PR2		SUPPORT	AUG	-	-	-	-	-	-	-
1	CVCS-LTDN			OWN	-	-	-	-	-	-	-
				PRE	-	-	-	-	-	-	-
F-A	I008600		A-8	ISI	-	-	-	-	-	-	-
F1.40	RHE-5-PR1		HANGER	AUG	-	-	-	-	-	-	-
1	CVCS-LTDN			OWN	-	-	-	-	-	-	-
				PRE	-	-	-	-	-	-	-
F-A	I008700		A-8	ISI	-	-	-	-	-	-	-
F1.40	RHE-5-PR2		SUPPORT	AUG	-	-	-	-	-	-	-
1	CVCS-LTDN			OWN	-	-	-	-	-	-	-
				PRE	-	-	-	-	-	-	-
F-A	I009200		A-8	ISI	-	-	-	-	-	-	-
F1.40	RHE-8-PR1		HANGER	AUG	-	-	-	-	-	-	-
1	CVCS-LTDN			OWN	-	-	-	-	-	-	-
				PRE	-	-	-	-	-	-	-
F-A	I009300		A-8	ISI	-	-	-	-	-	-	-
F1.40	RHE-8-PR2		SUPPORT	AUG	-	-	-	-	-	-	-
1	CVCS-LTDN			OWN	-	-	-	-	-	-	-
				PRE	-	-	-	-	-	-	-
F-A	I057100	PSI/VT/VT-106	A-7	ISI	-	-	-	-	-	-	-
F1.40	EBA-1		EYEBAR	AUG	-	-	-	-	-	-	-
1	RC			OWN	-	-	-	-	-	-	-
				PRE	-	-	-	s	-	-	-
F-A	I057150	PSI/VT/VT-106	A-7	ISI	-	-	-	-	-	-	-
F1.40	EBA-2		EYEBAR	AUG	-	-	-	-	-	-	-
1	RC			OWN	-	-	-	-	-	-	-
				PRE	-	-	-	s	-	-	-
F-A	I057310	PSI/VT/VT-106	A-6	ISI	-	-	-	-	-	-	-
F1.40	LEG E		SUPPORT COMPONENTS	AUG	-	-	-	-	-	-	-
1	RC			OWN	-	-	-	-	-	-	-
				PRE	-	-	-	s	-	-	-
F-A	I057320	PSI/VT/VT-106	A-6	ISI	-	-	-	-	-	-	-
F1.40	LEG F		SUPPORT COMPONENTS	AUG	-	-	-	-	-	-	-
1	RC			OWN	-	-	-	-	-	-	-
				PRE	-	-	-	s	-	-	-

Category, ItemNO, Class	Summary / CompID / System	Scope / Method / Procedure	Iso No. Comp. Desc. Code Case		Period 1 00	Period 1 02	Period 2 03	Period 2 05	Period 2 06	Period 3 08	Period 3 09
F-A	I057330	PSI/VT/VT-106	A-6	ISI	-	-	-	-	-	-	-
F1.40	LEG G		SUPPORT COMPONENTS	AUG	-	-	-	-	-	-	-
1	RC			OWN	-	-	-	-	-	-	-
				PRE	-	-	-	s	-	-	-
F-A	I058000	ISI/VT/VT-106	A-7	ISI	-	-	-	s	-	-	-
F1.40	EBB-1	PSI/VT/VT-106	EYEBAR	AUG	-	-	-	-	-	-	-
1	RC			OWN	-	-	-	-	-	-	-
				PRE	-	-	-	s	-	-	-
F-A	I058050	ISI/VT/VT-106	A-7	ISI	-	-	-	s	-	-	-
F1.40	EBB-2	PSI/VT/VT-106	EYEBAR	AUG	-	-	-	-	-	-	-
1	RC			OWN	-	-	-	-	-	-	-
				PRE	-	-	-	s	-	-	-
F-A	I058130	ISI/VT/VT-106	A-6	ISI	-	-	-	s	-	-	-
F1.40	LEG L	PSI/VT/VT-106	SUPPORT COMPONENTS	AUG	-	-	-	-	-	-	-
1	RC			OWN	-	-	-	-	-	-	-
				PRE	-	-	-	s	-	-	-
F-A	I058140	ISI/VT/VT-106	A-6	ISI	-	-	-	s	-	-	-
F1.40	LEG M	PSI/VT/VT-106	SUPPORT COMPONENTS	AUG	-	-	-	-	-	-	-
1	RC			OWN	-	-	-	-	-	-	-
				PRE	-	-	-	s	-	-	-
F-A	I058150	ISI/VT/VT-106	A-6	ISI	-	-	-	s	-	-	-
F1.40	LEG N	PSI/VT/VT-106	SUPPORT COMPONENTS	AUG	-	-	-	-	-	-	-
1	RC			OWN	-	-	-	-	-	-	-
				PRE	-	-	-	s	-	-	-
F-A	I078940	ISI/VT/VT-106	B-28	ISI	-	-	c	-	-	-	-
F1.40	RHR PUMP A SUPPORT #1		SHAFT END SUPPORT(#1)	AUG	-	-	-	-	-	-	-
2	RHR			OWN	-	-	-	-	-	-	-
				PRE	-	-	-	-	-	-	-
F-A	I078945	ISI/VT/VT-106	B-28	ISI	-	-	c	-	-	-	-
F1.40	RHR PUMP A SUPPORT #2		SPLIT LINE SUPPORT(#2)	AUG	-	-	-	-	-	-	-
2	RHR			OWN	-	-	-	-	-	-	-
				PRE	-	-	-	-	-	-	-
F-A	I078950	ISI/VT/VT-106	B-28	ISI	-	-	c	-	-	h	-
F1.40	RHR PUMP A SUPPORT #3	ISI/VT/VT-106	SPLIT LINE SUPPORT(#3)	AUG	-	-	-	-	-	-	-
2	RHR	ISI/VT/VT-106		OWN	-	-	-	-	-	-	-
		PSI/VT/VT-106		PRE	-	-	-	s	-	-	-
F-A	I078965	PSI/VT/VT-106	B-28	ISI	-	-	A	-	-	-	-
F1.40	RHR PUMP B SUPPORT #1	ISI/VT/VT-106	SHAFT END SUPPORT(#1)	AUG	-	-	-	-	-	-	-
2	RHR			OWN	-	-	-	-	-	-	-
				PRE	c	-	-	-	-	-	-

Category, ItemNO, Class	Summary / CompID / System	Scope / Method / Procedure	Iso No. Comp. Desc. Code Case		Period 1 00	Period 1 02	Period 2 03	Period 2 05	Period 2 06	Period 3 08	Period 3 09
F-A	I078970	PSI/VT/VT-106	B-28	ISI	-	-	A	-	-	-	-
F1.40	RHR PUMP B SUPPORT #2	ISI/VT/VT-106	SPLIT LINE SUPPORT(#2)	AUG	-	-	-	-	-	-	-
2	RHR			OWN	-	-	-	-	-	-	-
				PRE	c	-	-	-	-	-	-
F-A	I078975	PSI/VT/VT-106	B-28	ISI	-	-	A	-	-	-	-
F1.40	RHR PUMP B SUPPORT #3	ISI/VT/VT-106	SPLIT LINE SUPPORT(#3)	AUG	-	-	-	-	-	-	-
2	RHR			OWN	-	-	-	-	-	-	-
				PRE	c	-	-	-	-	-	-
F-A	I169160	ISI/VT/VT-106	B-109	ISI	c	-	-	-	-	-	-
F1.40	1A-1		SUPPORT LEG #1 (IA)	AUG	-	-	-	-	-	-	-
2	RHR			OWN	-	-	-	-	-	-	-
				PRE	-	-	-	-	-	-	-
F-A	I169170	ISI/VT/VT-106	B-109	ISI	c	-	-	-	-	-	-
F1.40	1A-2		SUPPORT LEG #2 (IA)	AUG	-	-	-	-	-	-	-
2	RHR			OWN	-	-	-	-	-	-	-
				PRE	-	-	-	-	-	-	-
F-A	I169180	ISI/VT/VT-106	B-109	ISI	c	-	-	-	-	-	-
F1.40	1A-3		SUPPORT LEG #3 (IA)	AUG	-	-	-	-	-	-	-
2	RHR			OWN	-	-	-	-	-	-	-
				PRE	-	-	-	-	-	-	-
F-A	I169360		B-109	ISI	-	-	-	-	-	-	-
F1.40	1B-1		SUPPORT LEG #1 (IA)	AUG	-	-	-	-	-	-	-
2	RHR			OWN	-	-	-	-	-	-	-
				PRE	-	-	-	-	-	-	-
F-A	I169370		B-109	ISI	-	-	-	-	-	-	-
F1.40	1B-2		SUPPORT LEG #2 (IA)	AUG	-	-	-	-	-	-	-
2	RHR			OWN	-	-	-	-	-	-	-
				PRE	-	-	-	-	-	-	-
F-A	I169380		B-109	ISI	-	-	-	-	-	-	-
F1.40	1B-3		SUPPORT LEG #3 (IA)	AUG	-	-	-	-	-	-	-
2	RHR			OWN	-	-	-	-	-	-	-
				PRE	-	-	-	-	-	-	-
F-A	I555050		C-41	ISI	-	-	-	-	-	-	-
F1.40	CCW1A-W		SUPPORT WEST (IA)	AUG	-	-	-	-	-	-	-
3	AC			OWN	-	-	-	-	-	-	-
				PRE	-	-	-	-	-	-	-
F-A	I555150		C-41	ISI	-	-	-	-	-	-	-
F1.40	CCW1A-E		SUPPORT EAST (IA)	AUG	-	-	-	-	-	-	-
3	AC			OWN	-	-	-	-	-	-	-
				PRE	-	-	-	-	-	-	-

Category, ItemNO, Class	Summary / CompID / System	Scope / Method / Procedure	Iso No. Comp. Desc. Code Case		Period 1 00	Period 1 02	Period 2 03	Period 2 05	Period 2 06	Period 3 08	Period 3 09
F-A	I555250		C-41	ISI	-	-	-	-	s	-	-
F1.40	CCW1B-W		SUPPORT WEST (IA)	AUG	-	-	-	-	-	-	-
3	AC			OWN	-	-	-	-	-	-	-
				PRE	-	-	-	-	-	-	-
F-A	I555350	ISI/VT/VT-106	C-41	ISI	-	-	-	-	s	-	-
F1.40	CCW1B-E		SUPPORT EAST (IA)	AUG	-	-	-	-	-	-	-
3	AC			OWN	-	-	-	-	-	-	-
				PRE	-	-	-	-	-	-	-
F-A	I555450	ISI/VT/VT-106	C-42	ISI	-	-	-	-	-	s	-
F1.40	CCWST-1		RIGID SUPPORT (IA)	AUG	-	-	-	-	-	-	-
3	AC			OWN	-	-	-	-	-	-	-
				PRE	-	-	-	-	-	-	-
F-A	I555550	ISI/VT/VT-106	C-42	ISI	-	-	-	-	-	s	-
F1.40	CCWST-2		RIGID SUPPORT (IA)	AUG	-	-	-	-	-	-	-
3	AC			OWN	-	-	-	-	-	-	-
				PRE	-	-	-	-	-	-	-
F-A	I555650	ISI/VT/VT-106	C-37	ISI	-	-	-	-	s	-	-
F1.40	DGHTX-1A		RIGID SUPPORT (IA)	AUG	-	-	-	-	-	-	-
3	DG			OWN	-	-	-	-	-	-	-
				PRE	-	-	-	-	-	-	-
F-A	I555750	ISI/VT/VT-106	C-37	ISI	-	-	-	-	s	-	-
F1.40	DGHTX-2A		RIGID SUPPORT (IA)	AUG	-	-	-	-	-	-	-
3	DG			OWN	-	-	-	-	-	-	-
				PRE	-	-	-	-	-	-	-
F-A	I555850		C-38	ISI	-	-	-	-	-	-	-
F1.40	DGHTX-1B		RIGID SUPPORT (IA)	AUG	-	-	-	-	-	-	-
3	DG			OWN	-	-	-	-	-	-	-
				PRE	-	-	-	-	-	-	-
F-A	I555950		C-38	ISI	-	-	-	-	-	-	-
F1.40	DGHTX-2B		RIGID SUPPORT (IA)	AUG	-	-	-	-	-	-	-
3	DG			OWN	-	-	-	-	-	-	-
				PRE	-	-	-	-	-	-	-
FLYWHEL	I057200		*****	ISI	-	-	-	-	-	-	-
WCAP	RCP-A FLYWHEEL, BORE & KEY		ID# 775	AUG	-	-	r	-	-	-	-
1	RC			OWN	-	-	-	-	-	-	-
				PRE	-	-	-	-	-	-	-
FLYWHEL	I057205		*****	ISI	-	-	-	-	-	-	-
WCAP	RCP-A FLYWHEEL, EXPOSE AREAS		ID# 775	AUG	-	-	r	-	-	-	-
1	RC			OWN	-	-	-	-	-	-	-
				PRE	-	-	-	-	-	-	-

Category, ItemNO, Class	Summary / CompID / System	Scope / Method / Procedure	Iso No. Comp. Desc. Code Case		Period 1 00	Period 1 02	Period 2 03	Period 2 05	Period 2 06	Period 3 08	Period 3 09
FLYWHEL	I057210		*****	ISI	-	-	-	-	-	-	-
WCAP	RCP-A ANTI-ROTATION PAWLS		PAWLS (11)	AUG	-	-	r	-	-	-	-
1	RC			OWN	-	-	-	-	-	-	-
				PRE	-	-	-	-	-	-	-
FLYWHEL	I058100		*****	ISI	-	-	-	-	-	-	-
WCAP	RCP-B FLYWHEEL, BORE & KEY		212-3D19156-G01-02	AUG	-	-	-	-	-	-	-
1	RC			OWN	-	-	-	-	-	-	-
				PRE	-	-	-	-	-	-	-
FLYWHEL	I058105		*****	ISI	-	-	-	-	-	-	-
WCAP	RCP-B FLYWHEEL, EXPOSE AREAS		212-3D19156-G01-02	AUG	-	-	-	-	-	-	-
1	RC			OWN	-	-	-	-	-	-	-
				PRE	-	-	-	-	-	-	-
FLYWHEL	I058110		*****	ISI	-	-	-	-	-	-	-
WCAP	RCP-B ANTI-ROTATION PAWLS		PAWLS (5)	AUG	-	-	-	-	-	-	-
1	RC			OWN	-	-	-	-	-	-	-
				PRE	-	-	-	-	-	-	-
FLYWHEL	I058200		*****	ISI	-	-	-	-	-	-	-
WCAP	RCP-S FLYWHEEL, BORE & KEY		SPARE	AUG	-	-	-	-	-	-	-
1	RC			OWN	-	-	-	-	-	-	-
				PRE	-	-	-	-	-	-	-
FLYWHEL	I058205		*****	ISI	-	-	-	-	-	-	-
WCAP	RCP-S FLYWHEEL, EXPOSE AREAS		SPARE	AUG	-	-	-	-	-	-	-
1	RC			OWN	-	-	-	-	-	-	-
				PRE	-	-	-	-	-	-	-
FLYWHEL	I058210		*****	ISI	-	-	-	-	-	-	-
WCAP	RCP-S ANTI-ROTATION PAWLS		PAWLS (11)-SPARE	AUG	-	-	-	-	-	-	-
1	RC			OWN	-	-	-	-	-	-	-
				PRE	-	-	-	-	-	-	-
HE-CB	I200100		B-9	ISI	-	-	-	-	-	-	-
CB	D2		PIPE-TO-ELBOW	AUG	-	-	-	-	-	s	-
2	MS			OWN	-	-	-	-	-	-	-
				PRE	-	-	-	-	-	-	-
HE-CB	I200105		B-9	ISI	-	-	-	-	-	-	-
CB	D3		ELBOW-TO-PIPE	AUG	-	-	-	-	-	s	-
2	MS			OWN	-	-	-	-	-	-	-
				PRE	-	-	-	-	-	-	-
HE-CB	I200110		B-9	ISI	-	-	-	-	-	-	-
CB	E		PIPE-TO-ELBOW	AUG	-	-	-	-	-	-	s
2	MS			OWN	-	-	-	-	-	-	-
				PRE	-	-	-	-	-	-	-

Category, ItemNO, Class	Summary / CompID / System	Scope / Method / Procedure	Iso No. Comp. Desc. Code Case		Period 1 00	Period 1 02	Period 2 03	Period 2 05	Period 2 06	Period 3 08	Period 3 09
HE-CB	I200115		B-9	ISI	-	-	-	-	-	-	-
CB	E1		ELBOW-TO-PIPE	AUG	-	-	-	-	-	-	s
2	MS			OWN	-	-	-	-	-	-	-
				PRE	-	-	-	-	-	-	-
HE-CB	I200120	AUG/RT/RT-104	B-9	ISI	-	-	-	-	-	-	-
CB	E2	AUG/MT/MT-105	ELBOW-TO-PIPE	AUG	c	-	-	-	-	-	-
2	MS	AUG/VT/VT-103		OWN	-	-	-	-	-	-	-
				PRE	-	-	-	-	-	-	-
HE-CB	I200125		B-9	ISI	-	-	-	-	-	-	-
CB	F		PIPE-TO-ELBOW	AUG	-	-	-	-	-	s	-
2	MS			OWN	-	-	-	-	-	-	-
				PRE	-	-	-	-	-	-	-
HE-CB	I200130	AUG/RT/RT-104	B-9	ISI	-	-	-	-	-	-	-
CB	G	AUG/MT/MT-105	PIPE-TO-TEE	AUG	c	-	-	-	-	-	-
2	MS	AUG/VT/VT-103		OWN	-	-	-	-	-	-	-
				PRE	-	-	-	-	-	-	-
HE-CB	I200135		B-9A	ISI	-	-	-	-	-	-	-
CB	G1		TEE-TO-CAP	AUG	-	-	-	-	-	s	-
2	MS			OWN	-	-	-	-	-	-	-
				PRE	-	-	-	-	-	-	-
HE-CB	I200140	AUG/VT/VT-103	B-9A	ISI	-	-	-	-	-	-	-
CB	G2	AUG/MT/MT-105	TEE-TO-PIPE	AUG	-	-	c	-	-	-	-
2	MS	AUG/PT/PT-106		OWN	-	-	-	-	-	-	-
		AUG/UT/UT-209		PRE	-	-	-	-	-	-	-
HE-CB	I200145	AUG/VT/VT-103	B-9A	ISI	-	-	-	-	-	-	-
CB	H	AUG/MT/MT-105	PIPE-TO-VALVE(3517)	AUG	-	-	c	-	-	-	-
2	MS	AUG/RT/RT-104		OWN	-	-	-	-	-	-	-
				PRE	-	-	-	-	-	-	-
HE-CB	I200150	AUG/VT/VT-103	B-9A	ISI	-	-	-	-	-	-	-
CB	J	AUG/MT/MT-105	3517 VALVE-TO-PIPE	AUG	-	-	c	-	-	-	-
3	MS	AUG/RT/RT-104		OWN	-	-	-	-	-	-	-
				PRE	-	-	-	-	-	-	-
HE-CB	I200155	AUG/VT/VT-103	B-9A	ISI	-	-	-	-	-	-	-
CB	K	AUG/MT/MT-105	PIPE-TO-VALVE 3519	AUG	-	-	c	-	-	-	-
3	MS	AUG/RT/RT-104		OWN	-	-	-	-	-	-	-
				PRE	-	-	-	-	-	-	-
HE-CB	I200160	AUG/RT/RT-104	B-9A	ISI	-	-	-	-	-	-	-
CB	L	AUG/MT/MT-105	3519 VALVE-TO-REDUCER	AUG	-	-	c	-	-	-	-
Q	MS	AUG/VT/VT-103		OWN	-	-	-	-	-	-	-
				PRE	-	-	-	-	-	-	-

Category, ItemNO, Class	Summary / CompID / System	Scope / Method / Procedure	Iso No. Comp. Desc. Code Case		Period 1 00	Period 1 02	Period 2 03	Period 2 05	Period 2 06	Period 3 08	Period 3 09
HE-CB	I200165	AUG/VT/VT-103	B-10A	ISI	-	-	-	-	-	-	-
CB	D1	AUG/MT/MT-105	ELBOW-TO-PIPE	AUG	-	-	-	-	-	-	s
2	MS	AUG/RT/RT-104		OWN	-	-	-	-	-	-	-
				PRE	-	-	-	-	-	-	-
HE-CB	I200170	OWN/VT/VT-103	B-10A	ISI	-	-	-	-	-	-	-
CB	D2	OWN/MT/MT-105	PIPE-TO-ELBOW	AUG	-	-	-	-	-	-	s
2	MS	OWN/RT/RT-104		OWN	c	-	-	-	-	-	-
				PRE	-	-	-	-	-	-	-
HE-CB	I200175	AUG/UT/UT-202	B-10A	ISI	-	-	-	-	-	-	-
CB	E	AUG/MT/MT-105	ELBOW-TO-PIPE	AUG	c	-	-	-	-	-	-
2	MS	AUG/VT/VT-103		OWN	-	-	-	-	-	-	-
				PRE	-	-	-	-	-	-	-
HE-CB	I200180	AUG/UT/UT-202	B-10A	ISI	-	-	-	-	-	-	-
CB	J	AUG/MT/MT-105	ELBOW-TO-PIPE	AUG	c	-	-	-	-	-	-
2	MS	AUG/VT/VT-103		OWN	-	-	-	-	-	-	-
				PRE	-	-	-	-	-	-	-
HE-CB	I200185	AUG/VT/VT-103	B-10A	ISI	-	-	-	-	-	-	-
CB	K	AUG/MT/MT-105	ELBOW-TO-PIPE	AUG	-	c	-	-	-	-	-
2	MS	AUG/UT/UT-209		OWN	-	-	-	-	-	-	-
				PRE	-	-	-	-	-	-	-
HE-CB	I200190	AUG/UT/UT-209	B-10A	ISI	-	-	-	-	-	-	-
CB	L	AUG/MT/MT-105	PIPE-TO-TEE	AUG	c	-	-	-	-	-	-
2	MS	AUG/VT/VT-103		OWN	-	-	-	-	-	-	-
				PRE	-	-	-	-	-	-	-
HE-CB	I200195	AUG/VT/VT-103	B-10	ISI	-	-	-	-	-	-	-
CB	L1	AUG/MT/MT-105	TEE-TO-CAP	AUG	-	c	-	-	-	-	-
2	MS	AUG/RT/RT-104		OWN	-	-	-	-	-	-	-
				PRE	-	-	-	-	-	-	-
HE-CB	I200200	AUG/VT/VT-103	B-10	ISI	-	-	-	-	-	-	-
CB	L2	AUG/MT/MT-105	TEE-TO-PIPE	AUG	-	c	-	-	-	-	-
2	MS	AUG/RT/RT-104		OWN	-	-	-	-	-	-	-
				PRE	-	-	-	-	-	-	-
HE-CB	I200205	AUG/VT/VT-103	B-10	ISI	-	-	-	-	-	-	-
CB	M	AUG/MT/MT-105	PIPE-TO-VALVE(3516)	AUG	-	-	c	-	-	-	-
2	MS	AUG/RT/RT-104		OWN	-	-	-	-	-	-	-
				PRE	-	-	-	-	-	-	-
HE-CB	I200210	AUG/VT/VT-103	B-10	ISI	-	-	-	-	-	-	-
CB	N	AUG/MT/MT-105	3516 VALVE-TO-PIPE	AUG	-	-	c	-	-	-	-
3	MS	AUG/RT/RT-104		OWN	-	-	-	-	-	-	-
				PRE	-	-	-	-	-	-	-

Category, ItemNO, Class	Summary / CompID / System	Scope / Method / Procedure	Iso No. Comp. Desc. Code Case		Period 1 00	Period 1 02	Period 2 03	Period 2 05	Period 2 06	Period 3 08	Period 3 09
HE-CB	I200215	AUG/VT/VT-103	B-10	ISI	-	-	-	-	-	-	-
CB	O	AUG/MT/MT-105	PIPE-TO-VALVE 3518	AUG	-	-	c	-	-	-	-
3	MS	AUG/RT/RT-104		OWN	-	-	-	-	-	-	-
				PRE	-	-	-	-	-	-	-
HE-CB	I200220	AUG/RT/RT-104	B-10	ISI	-	-	-	-	-	-	-
CB	P	AUG/MT/MT-105	3518 VALVE-TO-REDUCER	AUG	-	-	c	-	-	-	-
Q	MS	AUG/VT/VT-103		OWN	-	-	-	-	-	-	-
				PRE	-	-	-	-	-	-	-
HE-CB	I200225		HE-7	ISI	-	-	-	-	-	-	-
CB	L4		CAP-TO-PIPE	AUG	-	-	-	-	-	-	s
Q	MS			OWN	-	-	-	-	-	-	-
				PRE	-	-	-	-	-	-	-
HE-CB	I200230	AUG/VT/VT-103	HE-7A	ISI	-	-	-	-	-	-	-
CB	A	AUG/MT/MT-105	TEE-TO-PIPE	AUG	-	-	-	-	-	-	s
Q	MS	AUG/RT/RT-104		OWN	-	-	-	-	-	-	-
				PRE	-	-	-	-	-	-	-
HE-CB	I200235	AUG/UT/UT-202	HE-7A	ISI	-	-	-	-	-	-	-
CB	B	AUG/MT/MT-105	PIPE-TO-ELBOW	AUG	c	-	-	-	-	-	-
Q	MS	AUG/VT/VT-103		OWN	-	-	-	-	-	-	-
				PRE	-	-	-	-	-	-	-
HE-CB	I200240	AUG/UT/UT-202	HE-7A	ISI	-	-	-	-	-	-	-
CB	B1	AUG/MT/MT-105	ELBOW-TO-PIPE	AUG	c	-	-	-	-	-	-
Q	MS	AUG/VT/VT-103		OWN	-	-	-	-	-	-	-
				PRE	-	-	-	-	-	-	-
HE-CB	I200245	AUG/RT/RT-104	HE-7A	ISI	-	-	-	-	-	-	-
CB	C1	AUG/MT/MT-105	PIPE-TO-ELBOW	AUG	c	-	-	-	-	-	-
Q	MS	AUG/VT/VT-103		OWN	-	-	-	-	-	-	-
				PRE	-	-	-	-	-	-	-
HE-CB	I200250	AUG/VT/VT-103	HE-7A	ISI	-	-	-	-	-	-	-
CB	D	AUG/MT/MT-105	ELBOW-TO-PIPE	AUG	-	c	-	-	-	-	-
Q	MS	AUG/UT/UT-209		OWN	-	-	-	-	-	-	-
				PRE	-	-	-	-	-	-	-
HE-CB	I200255	AUG/VT/VT-103	HE-7A	ISI	-	-	-	-	-	-	-
CB	D1	AUG/MT/MT-105	PIPE-TO-ELBOW	AUG	-	c	-	-	-	-	-
Q	MS	AUG/RT/RT-104		OWN	-	-	-	-	-	-	-
				PRE	-	-	-	-	-	-	-
HE-CB	I200260	AUG/VT/VT-103	HE-7A	ISI	-	-	-	-	-	-	-
CB	A	AUG/MT/MT-105	TEE-TO-PIPE	AUG	-	-	c	-	-	-	-
Q	MS	AUG/UT/UT-209		OWN	-	-	-	-	-	-	-
				PRE	-	-	-	-	-	-	-

Category, ItemNO, Class	Summary / CompID / System	Scope / Method / Procedure	Iso No. Comp. Desc. Code Case		Period 1 00	Period 1 02	Period 2 03	Period 2 05	Period 2 06	Period 3 08	Period 3 09
HE-CB	I200265		HE-7A	ISI	-	-	-	-	-	-	-
CB	B		PIPE-TO-ELBOW	AUG	-	-	-	-	s	-	-
Q	MS			OWN	-	-	-	-	-	-	-
				PRE	-	-	-	-	-	-	-
HE-CB	I200270		HE-7A	ISI	-	-	-	-	-	-	-
CB	B1		ELBOW-TO-PIPE	AUG	-	-	-	-	s	-	-
Q	MS			OWN	-	-	-	-	-	-	-
				PRE	-	-	-	-	-	-	-
HE-CB	I200275	AUG/UT/UT-209	HE-7A	ISI	-	-	-	-	-	-	-
CB	C	AUG/MT/MT-105	PIPE-TO-ELBOW	AUG	-	-	-	s	-	-	-
Q	MS	AUG/VT/VT-103		OWN	-	-	-	-	-	-	-
				PRE	-	-	-	-	-	-	-
HE-CB	I200280	AUG/UT/UT-209	HE-7A	ISI	-	-	-	-	-	-	-
CB	C1	AUG/MT/MT-105	ELBOW-TO-PIPE	AUG	-	-	-	s	-	-	-
Q	MS	AUG/VT/VT-103		OWN	-	-	-	-	-	-	-
				PRE	-	-	-	-	-	-	-
HE-CB	I200285	AUG/UT/UT-209	HE-7A	ISI	-	-	-	-	-	-	-
CB	D	AUG/MT/MT-105	PIPE-TO-ELBOW	AUG	-	-	-	s	-	-	-
Q	MS	AUG/VT/VT-103		OWN	-	-	-	-	-	-	-
				PRE	-	-	-	-	-	-	-
HE-CB	I200290	AUG/VT/VT-103	HE-6	ISI	-	-	-	-	-	-	-
CB	J	AUG/MT/MT-105	ELBOW-TO-PIPE	AUG	-	-	-	-	-	-	s
Q	FW	AUG/RT/RT-104		OWN	-	-	-	-	-	-	-
				PRE	-	-	-	-	-	-	-
HE-CB	I200295	AUG/RT/RT-104	HE-6	ISI	-	-	-	-	-	-	-
CB	K1	AUG/MT/MT-105	PIPE-TO-ELBOW	AUG	c	-	-	-	-	-	-
Q	FW	AUG/VT/VT-103		OWN	-	-	-	-	-	-	-
				PRE	-	-	-	-	-	-	-
HE-CB	I200300	AUG/RT/RT-104	HE-6	ISI	-	-	-	-	-	-	-
CB	L	AUG/MT/MT-105	ELBOW-TO-PIPE	AUG	c	-	-	-	-	-	-
Q	FW	AUG/VT/VT-103		OWN	-	-	-	-	-	-	-
				PRE	-	-	-	-	-	-	-
HE-CB	I200305	AUG/VT/VT-103	HE-6	ISI	-	-	-	-	-	-	-
CB	L1	AUG/MT/MT-105	PIPE-TO-ELBOW	AUG	-	c	-	-	-	-	-
Q	FW	AUG/UT/UT-209		OWN	-	-	-	-	-	-	-
				PRE	-	-	-	-	-	-	-
HE-CB	I200310	AUG/VT/VT-103	HE-6	ISI	-	-	-	-	-	-	-
CB	M	AUG/MT/MT-105	ELBOW-TO-PIPE	AUG	-	-	c	-	-	-	-
Q	FW	AUG/UT/UT-209		OWN	-	-	-	-	-	-	-
				PRE	-	-	-	-	-	-	-

Category, ItemNO, Class	Summary / CompID / System	Scope / Method / Procedure	Iso No. Comp. Desc. Code Case		Period 1 00	Period 1 02	Period 2 03	Period 2 05	Period 2 06	Period 3 08	Period 3 09
HE-CB	I200315	AUG/VT/VT-103	HE-6	ISI	-	-	-	-	-	-	-
CB	M1	AUG/MT/MT-105	PIPE-TO-ELBOW	AUG	-	-	c	-	-	-	-
Q	FW	AUG/UT/UT-209		OWN	-	-	-	-	-	-	-
				PRE	-	-	-	-	-	-	-
HE-CB	I200320	AUG/UT/UT-209	HE-6	ISI	-	-	-	-	-	-	-
CB	M2	AUG/MT/MT-105	ELBOW-TO-PIPE	AUG	-	-	-	s	-	-	-
Q	FW	AUG/VT/VT-103		OWN	-	-	-	-	-	-	-
				PRE	-	-	-	-	-	-	-
HE-CB	I200325		HE-6	ISI	-	-	-	-	-	-	-
CB	A		8" BRANCH WELD	AUG	-	-	-	-	-	s	-
Q	FW			OWN	-	-	-	-	-	-	-
				PRE	-	-	-	-	-	-	-
HE-CB	I200330		HE-6	ISI	-	-	-	-	-	-	-
CB	B		8" BRANCH WELD-TO-ELBOW	AUG	-	-	-	-	-	s	-
Q	FW			OWN	-	-	-	-	-	-	-
				PRE	-	-	-	-	-	-	-
HE-CB	I200335	AUG/VT/VT-103	HE-6	ISI	-	-	-	-	-	-	-
CB	C	AUG/MT/MT-105	ELBOW-TO-PIPE	AUG	-	-	-	-	-	-	s
Q	FW	AUG/RT/RT-104		OWN	-	-	-	-	-	-	-
				PRE	-	-	-	-	-	-	-
HE-CB	I200340	AUG/RT/RT-104	HE-6	ISI	-	-	-	-	-	-	-
CB	D	AUG/MT/MT-105	PIPE-TO-ELBOW	AUG	c	-	-	-	-	-	-
Q	FW	AUG/VT/VT-103		OWN	-	-	-	-	-	-	-
				PRE	-	-	-	-	-	-	-
HE-CB	I200345	AUG/VT/VT-103	HE-6	ISI	-	-	-	-	-	-	-
CB	E	AUG/MT/MT-105	ELBOW-TO-PIPE	AUG	-	c	-	-	-	-	-
Q	FW	AUG/UT/UT-209		OWN	-	-	-	-	-	-	-
				PRE	-	-	-	-	-	-	-
HE-CB	I200350	AUG/VT/VT-103	HE-6	ISI	-	-	-	-	-	-	-
CB	F	AUG/MT/MT-105	PIPE-TO-ELBOW	AUG	-	c	-	-	-	-	-
Q	FW	AUG/UT/UT-209		OWN	-	-	-	-	-	-	-
				PRE	-	-	-	-	-	-	-
HE-CB	I200355	AUG/VT/VT-103	HE-6	ISI	-	-	-	-	-	-	-
CB	G	AUG/MT/MT-105	ELBOW-TO-PIPE	AUG	-	-	c	-	-	-	-
Q	FW	AUG/UT/UT-209		OWN	-	-	-	-	-	-	-
				PRE	-	-	-	-	-	-	-
HE-CB	I200360	AUG/VT/VT-103	HE-6	ISI	-	-	-	-	-	-	-
CB	H	AUG/MT/MT-105	PIPE-TO-VALVE	AUG	-	-	c	-	-	-	-
Q	FW	AUG/RT/RT-104		OWN	-	-	-	-	-	-	-
				PRE	-	-	-	-	-	-	-

Category, ItemNO, Class	Summary / CompID / System	Scope / Method / Procedure	Iso No. Comp. Desc. Code Case		Period 1 00	Period 1 02	Period 2 03	Period 2 05	Period 2 06	Period 3 08	Period 3 09
HE-CB	I200365		HE-5	ISI	-	-	-	-	-	-	-
CB	T2		PIPE-TO-ELBOW	AUG	-	-	-	-	-	s	-
Q	FW			OWN	-	-	-	-	-	-	-
				PRE	-	-	-	-	-	-	-
HE-CB	I200370		HE-5	ISI	-	-	-	-	-	-	-
CB	T3		ELBOW-TO-PIPE	AUG	-	-	-	-	-	s	-
Q	FW			OWN	-	-	-	-	-	-	-
				PRE	-	-	-	-	-	-	-
HE-CB	I200375		HE-5	ISI	-	-	-	-	-	-	-
CB	U7		ELBOW-TO-PIPE	AUG	-	-	-	-	-	s	-
Q	FW			OWN	-	-	-	-	-	-	-
				PRE	-	-	-	-	-	-	-
HE-CB	I200380		B-11	ISI	-	-	-	-	-	-	-
CB	U5		PIPE-TO-ELBOW	AUG	-	-	-	-	-	s	-
Q	FW			OWN	-	-	-	-	-	-	-
				PRE	-	-	-	-	-	-	-
HE-CB	I200385		B-11	ISI	-	-	-	-	-	-	-
CB	U6		ELB0W-TO-ELBOW	AUG	-	-	-	-	-	s	-
Q	FW			OWN	-	-	-	-	-	-	-
				PRE	-	-	-	-	-	-	-
HE-CB	I200390		B-11	ISI	-	-	-	-	-	-	-
CB	V		ELB0W-TO-PIPE	AUG	-	-	-	-	-	-	s
Q	FW			OWN	-	-	-	-	-	-	-
				PRE	-	-	-	-	-	-	-
HE-CB	I200395		B-11	ISI	-	-	-	-	-	-	-
CB	VA		PIPE-TO-FLANGE	AUG	-	-	-	-	-	s	-
Q	FW			OWN	-	-	-	-	-	-	-
				PRE	-	-	-	-	-	-	-
HE-CB	I200400		B-11	ISI	-	-	-	-	-	-	-
CB	VB		PIPE-TO-FLANGE	AUG	-	-	-	-	-	s	-
Q	FW			OWN	-	-	-	-	-	-	-
				PRE	-	-	-	-	-	-	-
HE-CB	I200405	AUG/VT/VT-103	B-11	ISI	-	-	-	-	-	-	-
CB	V1	AUG/MT/MT-105	PIPE-TO-PIPE	AUG	-	-	-	-	-	-	s
Q	FW	AUG/RT/RT-104		OWN	-	-	-	-	-	-	-
				PRE	-	-	-	-	-	-	-
HE-CB	I200410	AUG/UT/UT-202	B-11	ISI	-	-	-	-	-	-	-
CB	V2	AUG/MT/MT-105	PIPE-TO-PIPE	AUG	c	-	-	-	-	-	-
Q	FW	AUG/VT/VT-103		OWN	-	-	-	-	-	-	-
				PRE	-	-	-	-	-	-	-

Category, ItemNO, Class	Summary / CompID / System	Scope / Method / Procedure	Iso No. Comp. Desc. Code Case		Period 1 00	Period 1 02	Period 2 03	Period 2 05	Period 2 06	Period 3 08	Period 3 09
HE-CB	I200415	AUG/VT/VT-103	B-11	ISI	-	-	-	-	-	-	-
CB	V2A	AUG/MT/MT-105	PIPE-TO-FLANGE	AUG	-	c	-	-	-	-	-
Q	FW	AUG/RT/RT-104		OWN	-	-	-	-	-	-	-
		AUG/UT/NDE-605		PRE	-	-	-	-	-	-	-
HE-CB	I200420	AUG/VT/VT-103	B-11	ISI	-	-	-	-	-	-	-
CB	V2B	AUG/MT/MT-105	FLANGE-TO-PIPE	AUG	-	c	-	-	-	-	-
Q	FW	AUG/RT/RT-104		OWN	-	-	-	-	-	-	-
		AUG/UT/NDE-605		PRE	-	-	-	-	-	-	-
HE-CB	I200425	AUG/RT/RT-104	B-11	ISI	-	-	-	-	-	-	-
CB	W	AUG/MT/MT-105	PIPE-TO-VALVE 3993	AUG	c	-	-	-	-	-	-
Q	FW	AUG/VT/VT-103		OWN	-	-	-	-	-	-	-
				PRE	-	-	-	-	-	-	-
HE-CB	I200430	OWN/UT/NDE-605	B-11	ISI	-	-	-	-	-	-	-
CB	X	AUG/RT/RT-104	VALVE(3993)-TO-PIPE	AUG	c	-	-	-	-	-	-
2	FW	AUG/MT/MT-105		OWN	-	c	-	-	-	-	-
		AUG/VT/VT-103		PRE	-	-	-	-	-	-	-
HE-CB	I200435	AUG/VT/VT-103	B-11	ISI	-	-	-	-	-	-	-
CB	Y	AUG/MT/MT-105	PIPE-TO-VALVE(3995)	AUG	-	c	-	-	-	-	-
2	FW	AUG/RT/RT-104		OWN	-	-	-	-	-	-	-
		AUG/UT/NDE-605		PRE	-	-	-	-	-	-	-
HE-CB	I200440	AUG/VT/VT-103	B-11	ISI	-	-	-	-	-	-	-
CB	Z	AUG/MT/MT-105	VALVE(3995)-TO-PIPE	AUG	-	-	c	-	-	-	-
2	FW	AUG/RT/RT-104		OWN	-	-	-	-	-	-	-
				PRE	-	-	-	-	-	-	-
HE-CB	I200445	AUG/UT/UT-209	B-11	ISI	-	-	-	-	-	-	-
CB	Z1	AUG/MT/MT-105	PIPE-TO-ELBOW	AUG	-	-	-	s	-	-	-
2	FW	AUG/VT/VT-103		OWN	-	-	-	-	-	-	-
				PRE	-	-	-	-	-	-	-
HE-CB	I200450	AUG/RT/RT-104	B-11	ISI	-	-	-	-	-	-	-
CB	Z2	AUG/MT/MT-105	ELBOW-TO-PIPE	AUG	-	-	-	s	-	-	-
2	FW	AUG/VT/VT-103		OWN	-	-	-	-	-	-	-
				PRE	-	-	-	-	-	-	-
HE-CB	I200455	AUG/RT/RT-104	B-11	ISI	-	-	-	-	-	-	-
CB	Z3	AUG/MT/MT-105	PIPE-TO-ELBOW	AUG	-	-	-	s	-	-	-
2	FW	AUG/VT/VT-103		OWN	-	-	-	-	-	-	-
				PRE	-	-	-	-	-	-	-
HE-CB	I200460	AUG/UT/UT-209	B-11	ISI	-	-	-	-	-	-	-
CB	Z4	AUG/MT/MT-105	ELBOW-TO-PIPE	AUG	-	-	-	s	-	-	-
2	FW	AUG/VT/VT-103		OWN	-	-	-	-	-	-	-
				PRE	-	-	-	-	-	-	-

Category, ItemNO, Class	Summary / CompID / System	Scope / Method / Procedure	Iso No. Comp. Desc. Code Case		Period 1 00	Period 1 02	Period 2 03	Period 2 05	Period 2 06	Period 3 08	Period 3 09
HE-CB	I200465		HE-5	ISI	-	-	-	-	-	-	-
CB	F3		PIPE-TO-ELBOW	AUG	-	-	-	-	-	s	-
Q	FW			OWN	-	-	-	-	-	-	-
				PRE	-	-	-	-	-	-	-
HE-CB	I200470		HE-5	ISI	-	-	-	-	-	-	-
CB	F5		ELBOW-TO-PIPE	AUG	-	-	-	-	-	s	-
Q	FW			OWN	-	-	-	-	-	-	-
				PRE	-	-	-	-	-	-	-
HE-CB	I200475		HE-5	ISI	-	-	-	-	-	-	-
CB	F1		PIPE-TO-PIPE	AUG	-	-	-	-	-	s	-
Q	FW			OWN	-	-	-	-	-	-	-
				PRE	-	-	-	-	-	-	-
HE-CB	I200480		HE-5	ISI	-	-	-	-	-	-	-
CB	F2		PIPE-TO-ELBOW	AUG	-	-	-	-	-	s	-
Q	FW			OWN	-	-	-	-	-	-	-
				PRE	-	-	-	-	-	-	-
HE-CB	I200485		HE-5	ISI	-	-	-	-	-	-	-
CB	G		ELBOW-TO-PIPE	AUG	-	-	-	-	-	s	-
Q	FW			OWN	-	-	-	-	-	-	-
				PRE	-	-	-	-	-	-	-
HE-CB	I200490		HE-5	ISI	-	-	-	-	-	-	-
CB	G2		PIPE-TO-ELBOW	AUG	-	-	-	-	-	-	s
Q	FW			OWN	-	-	-	-	-	-	-
				PRE	-	-	-	-	-	-	-
HE-CB	I200495		HE-5	ISI	-	-	-	-	-	-	-
CB	G1		ELBOW-TO-PIPE	AUG	-	-	-	-	-	-	s
Q	FW			OWN	-	-	-	-	-	-	-
				PRE	-	-	-	-	-	-	-
HE-CB	I200500		HE-5	ISI	-	-	-	-	-	-	-
CB	G3		PIPE-TO-ELBOW	AUG	-	-	-	-	-	-	s
Q	FW			OWN	-	-	-	-	-	-	-
				PRE	-	-	-	-	-	-	-
HE-CB	I200505		B-14	ISI	-	-	-	-	-	-	-
CB	G4		ELBOW-TO-PIPE	AUG	-	-	-	-	-	s	-
Q	FW			OWN	-	-	-	-	-	-	-
				PRE	-	-	-	-	-	-	-
HE-CB	I200510		B-14	ISI	-	-	-	-	-	-	-
CB	H		PIPE-TO-PIPE	AUG	-	-	-	-	-	s	-
Q	FW			OWN	-	-	-	-	-	-	-
				PRE	-	-	-	-	-	-	-

Category, ItemNO, Class	Summary / CompID / System	Scope / Method / Procedure	Iso No. Comp. Desc. Code Case		Period 1 00	Period 1 02	Period 2 03	Period 2 05	Period 2 06	Period 3 08	Period 3 09
HE-CB	I200515	AUG/VT/VT-103	B-14	ISI	-	-	-	-	-	-	-
CB	HA	AUG/MT/MT-105	PIPE-TO-FLANGE	AUG	-	-	-	-	-	-	s
Q	FW	AUG/RT/RT-104		OWN	-	-	-	-	-	-	-
				PRE	-	-	-	-	-	-	-
HE-CB	I200520	AUG/RT/RT-104	B-14	ISI	-	-	-	-	-	-	-
CB	HB	AUG/MT/MT-105	FLANGE-TO-PIPE	AUG	c	-	-	-	-	-	-
Q	FW	AUG/VT/VT-103		OWN	-	-	-	-	-	-	-
				PRE	-	-	-	-	-	-	-
HE-CB	I200525		B-14	ISI	-	-	-	-	-	-	-
CB	H1		PIPE-TO-PIPE	AUG	-	-	-	-	-	-	s
Q	FW			OWN	-	-	-	-	-	-	-
				PRE	-	-	-	-	-	-	-
HE-CB	I200530	AUG/RT/RT-104	B-14	ISI	-	-	-	-	-	-	-
CB	H2	AUG/MT/MT-105	PIPE-TO-PIPE	AUG	c	-	-	-	-	-	-
Q	FW	AUG/VT/VT-103		OWN	-	-	-	-	-	-	-
				PRE	-	-	-	-	-	-	-
HE-CB	I200535	AUG/VT/VT-103	B-14	ISI	-	-	-	-	-	-	-
CB	H2A	AUG/MT/MT-105	PIPE-TO-FLANGE	AUG	-	c	-	-	-	-	-
Q	FW	AUG/RT/RT-104		OWN	-	-	-	-	-	-	-
		AUG/UT/ISWT-UT2		PRE	-	-	-	-	-	-	-
HE-CB	I200540	AUG/VT/VT-103	B-14	ISI	-	-	-	-	-	-	-
CB	H2B	AUG/MT/MT-105	FLANGE-TO-PIPE	AUG	-	-	c	-	-	-	-
Q	FW	AUG/UT/UT-209		OWN	-	-	-	-	-	-	-
				PRE	-	-	-	-	-	-	-
HE-CB	I200545	OWN/UT/NDE-605	B-14	ISI	-	-	-	-	-	-	-
CB	J	AUG/RT/RT-104	PIPE-TO-PIPE	AUG	c	-	-	-	-	-	-
Q	FW	AUG/MT/MT-105		OWN	-	c	-	-	-	-	-
		AUG/VT/VT-103		PRE	-	-	-	-	-	-	-
HE-CB	I200550	AUG/VT/VT-103	B-14	ISI	-	-	-	-	-	-	-
CB	K	AUG/MT/MT-105	PIPE-TO-VALVE 3992	AUG	-	c	-	-	-	-	-
Q	FW	AUG/RT/RT-104		OWN	-	-	-	-	-	-	-
				PRE	-	-	-	-	-	-	-
HE-CB	I200555	AUG/VT/VT-103	B-14	ISI	-	-	-	-	-	-	-
CB	L	AUG/MT/MT-105	VALVE(3992)-TO-PIPE	AUG	-	c	-	-	-	-	-
2	FW	AUG/RT/RT-104		OWN	-	-	-	-	-	-	-
				PRE	-	-	-	-	-	-	-
HE-CB	I200560		B-14	ISI	-	-	-	-	-	-	-
CB	M		PIPE-TO-VALVE(3994)	AUG	-	-	-	-	-	s	-
2	FW			OWN	-	-	-	-	-	-	-
				PRE	-	-	-	-	-	-	-

Category, ItemNO, Class	Summary / CompID / System	Scope / Method / Procedure	Iso No. Comp. Desc. Code Case		Period 1 00	Period 1 02	Period 2 03	Period 2 05	Period 2 06	Period 3 08	Period 3 09
HE-CB	I200565	AUG/RT/RT-104	B-14	ISI	-	-	-	-	-	-	-
CB	N1	AUG/MT/MT-105	ELBOW-TO-PIPE	AUG	-	-	-	s	-	-	-
2	FW	AUG/VT/VT-103		OWN	-	-	-	-	-	-	-
				PRE	-	-	-	-	-	-	-
HE-CB	I200570	AUG/UT/UT-209	B-14	ISI	-	-	-	-	-	-	-
CB	O	AUG/MT/MT-105	PIPE-TO-ELBOW	AUG	-	-	-	s	-	-	-
2	FW	AUG/VT/VT-103		OWN	-	-	-	-	-	-	-
				PRE	-	-	-	-	-	-	-
HE-CB	I200575		B-14	ISI	-	-	-	-	-	-	-
CB	O1		ELBOW-TO-PIPE	AUG	-	-	-	-	-	s	-
2	FW			OWN	-	-	-	-	-	-	-
				PRE	-	-	-	-	-	-	-
HE-CB	I200580	AUG/RT/RT-104	B-14	ISI	-	-	-	-	-	-	-
CB	P	AUG/MT/MT-105	PIPE-TO-ELBOW	AUG	-	-	-	s	-	-	-
2	FW	AUG/VT/VT-103		OWN	-	-	-	-	-	-	-
				PRE	-	-	-	-	-	-	-
HE-CS	I201020	OWN/VT/VT-106	HE-7	ISI	-	-	-	-	-	-	-
HEF1.20A	MS-34 (S1)		RIGID HANGER (IA)	AUG	-	-	-	-	-	-	-
Q	MS			OWN	-	-	c	-	-	-	-
				PRE	-	-	-	-	-	-	-
HE-CS	I201040		HE-7	ISI	-	-	-	-	-	-	-
HEF1.20A	MS-35 (S2)		RIGID HANGER (IA)	AUG	-	-	-	-	-	-	-
Q	MS			OWN	-	-	-	-	-	-	-
				PRE	-	-	-	-	-	-	-
HE-CS	I201050	OWN/VT/VT-106	HE-7	ISI	-	-	-	-	-	-	-
HEF1.20A	MS-47 (S3)		RIGID HANGER (IA)	AUG	-	-	-	-	-	-	-
Q	MS			OWN	-	-	c	-	-	-	-
				PRE	-	-	-	-	-	-	-
HE-CS	I201060		HE-7	ISI	-	-	-	-	-	-	-
HEF1.20A	MS-59 (S4)		RIGID HANGER	AUG	-	-	-	-	-	-	-
Q	MS			OWN	-	-	-	-	-	-	-
				PRE	-	-	-	-	-	-	-
HE-CS	I201260		HE-7A	ISI	-	-	-	-	-	-	-
HEF1.20A	S13A		RIGID HANGER	AUG	-	-	-	-	-	-	-
Q	MS			OWN	-	-	-	-	-	-	-
				PRE	-	-	-	-	-	-	-
HE-CS	I201280		HE-7A	ISI	-	-	-	-	-	-	-
HEF1.20A	S13B (S14)		RIGID HANGER	AUG	-	-	-	-	-	-	-
4	MS			OWN	-	-	-	-	-	-	-
				PRE	-	-	-	-	-	-	-

Category, ItemNO, Class	Summary / CompID / System	Scope / Method / Procedure	Iso No. Comp. Desc. Code Case		Period 1 00	Period 1 02	Period 2 03	Period 2 05	Period 2 06	Period 3 08	Period 3 09
HE-CS	I201460		HE-7A	ISI	-	-	-	-	-	-	-
HEF1.20A	S23A		RIGID HANGER	AUG	-	-	-	-	-	-	-
Q	MS			OWN	-	-	-	-	-	-	-
				PRE	-	-	-	-	-	-	-
HE-CS	I201480		HE-7A	ISI	-	-	-	-	-	-	-
HEF1.20A	S23B (S24)		RIGID HANGER	AUG	-	-	-	-	-	-	-
4	MS			OWN	-	-	-	-	-	-	-
				PRE	-	-	-	-	-	-	-
HE-CS	I201900	OWN/VT/VT-106	B-14	ISI	-	-	-	-	-	-	-
HEF1.20A	FWU-36		RIGID RESTRAINT	AUG	-	-	-	-	-	-	-
Q	FW			OWN	-	-	c	-	-	-	-
				PRE	-	-	-	-	-	-	-
HE-CS	I201940		B-14	ISI	-	-	-	-	-	-	-
HEF1.20A	FWU-34		RIGID RESTRAINT	AUG	-	-	-	-	-	-	-
Q	FW			OWN	-	-	-	-	-	-	-
				PRE	-	-	-	-	-	-	-
HE-CS	I202020		HE-5	ISI	-	-	-	-	-	-	-
HEF1.20A	FWU-30		GUIDE	AUG	-	-	-	-	-	-	-
Q	FW			OWN	-	-	-	-	-	-	-
				PRE	-	-	-	-	-	-	-
HE-CS	I202300		HE-6	ISI	-	-	-	-	-	-	-
HEF1.20A	CD-167 (S35)		RIGID HANGER	AUG	-	-	-	-	-	-	-
Q	FW			OWN	-	-	-	-	-	-	-
				PRE	-	-	-	-	-	-	-
HE-CS	I202320	PSI/VT/VT-106	HE-6	ISI	-	-	-	-	-	-	-
HEF1.20A	CD-168 (S36)		RIGID HANGER	AUG	-	-	-	-	-	-	-
Q	FW			OWN	-	-	-	-	-	-	-
				PRE	-	-	c	-	-	-	-
HE-CS	I202340		HE-6	ISI	-	-	-	-	-	-	-
HEF1.20A	CD-169 (S37)		RIGID HANGER	AUG	-	-	-	-	-	-	-
Q	FW			OWN	-	-	-	-	-	-	-
				PRE	-	-	-	-	-	-	-
HE-CS	I201000	OWN/VT/VT-106	HE-7	ISI	-	-	-	-	-	-	-
HEF1.20B	MSU-35		ANCHOR (IA)	AUG	-	-	-	-	-	-	-
Q	MS			OWN	c	-	-	-	-	-	-
				PRE	-	-	-	-	-	-	-
HE-CS	I201720		HE-5	ISI	-	-	-	-	-	-	-
HEF1.20B	FWU-27		RIGID SUPPORT (IA)	AUG	-	-	-	-	-	-	-
Q	FW			OWN	-	-	-	-	-	s	-
				PRE	-	-	-	-	-	-	-

Category, ItemNO, Class	Summary / CompID / System	Scope / Method / Procedure	Iso No. Comp. Desc. Code Case		Period 1 00	Period 1 02	Period 2 03	Period 2 05	Period 2 06	Period 3 08	Period 3 09
HE-CS	I201740		HE-5	ISI	-	-	-	-	-	-	-
HEF1.20B	FWU-28		ANCHOR (IA)	AUG	-	-	-	-	-	-	-
Q	FW			OWN	-	-	-	-	-	-	-
				PRE	-	-	-	-	-	-	-
HE-CS	I202040		HE-5	ISI	-	-	-	-	-	-	-
HEF1.20B	FWU-29		RIGID SUPPORT (IA)	AUG	-	-	-	-	-	-	-
Q	FW			OWN	-	-	-	-	-	-	-
				PRE	-	-	-	-	-	-	-
HE-CS	I202240		HE-6	ISI	-	-	-	-	-	-	-
HEF1.20B	FW-45 (S32)		ANCHOR (IA)	AUG	-	-	-	-	-	-	-
Q	FW			OWN	-	-	-	-	-	-	-
				PRE	-	-	-	-	-	-	-
HE-CS	I202360		HE-6	ISI	-	-	-	-	-	-	-
HEF1.20B	CD-170 (S38)		GUIDE (IA)	AUG	-	-	-	-	-	-	-
Q	FW			OWN	-	-	-	-	-	-	-
				PRE	-	-	-	-	-	-	-
HE-CS	I201100		HE-7A	ISI	-	-	-	-	-	-	-
HEF1.20C	MS-36 (S5)		VARIABLE SPRING	AUG	-	-	-	-	-	-	-
Q	MS			OWN	-	-	-	-	-	-	-
				PRE	-	-	-	-	-	-	-
HE-CS	I201120		HE-7A	ISI	-	-	-	-	-	-	-
HEF1.20C	MS-37 (S6)		VARIABLE SPRING	AUG	-	-	-	-	-	-	-
Q	MS			OWN	-	-	-	-	-	-	-
				PRE	-	-	-	-	-	-	-
HE-CS	I201140		HE-7A	ISI	-	-	-	-	-	-	-
HEF1.20C	MS-150 (S7)		HYDRAULIC SNUBBER (IA)	AUG	-	-	-	-	-	-	-
Q	MS			OWN	-	-	-	-	-	-	-
				PRE	-	-	-	-	-	-	-
HE-CS	I201160		HE-7A	ISI	-	-	-	-	-	-	-
HEF1.20C	MS-38 (S8)		VARIABLE SPRING	AUG	-	-	-	-	-	-	-
Q	MS			OWN	-	-	-	-	-	s	-
				PRE	-	-	-	-	-	-	-
HE-CS	I201180		HE-7A	ISI	-	-	-	-	-	-	-
HEF1.20C	MS-39 (S9)		VARIABLE SPRING	AUG	-	-	-	-	-	-	-
Q	MS			OWN	-	-	-	-	-	-	s
				PRE	-	-	-	-	-	-	-
HE-CS	I201200		HE-7A	ISI	-	-	-	-	-	-	-
HEF1.20C	MS-151 (S10)		HYDRAULIC SNUBBER	AUG	-	-	-	-	-	-	-
Q	MS			OWN	-	-	-	-	-	-	-
				PRE	-	-	-	-	-	-	-

Category, ItemNO, Class	Summary / CompID / System	Scope / Method / Procedure	Iso No. Comp. Desc. Code Case		Period 1 00	Period 1 02	Period 2 03	Period 2 05	Period 2 06	Period 3 08	Period 3 09
HE-CS	I201220		HE-7A	ISI	-	-	-	-	-	-	-
HEF1.20C	MS-40 (S11)		VARIABLE SPRING	AUG	-	-	-	-	-	-	-
Q	MS			OWN	-	-	-	-	-	-	-
				PRE	-	-	-	-	-	-	-
HE-CS	I201240	OWN/VT/VT-106	HE-7A	ISI	-	-	-	-	-	-	-
HEF1.20C	MS-41 (S12)		VARIABLE SPRING (IA)	AUG	-	-	-	-	-	-	-
Q	MS			OWN	-	c	-	-	-	-	-
				PRE	-	-	-	-	-	-	-
HE-CS	I201300		HE-7A	ISI	-	-	-	-	-	-	-
HEF1.20C	MS-42 (S15)		VARIABLE SPRING	AUG	-	-	-	-	-	-	-
Q	MS			OWN	-	-	-	-	-	-	-
				PRE	-	-	-	-	-	-	-
HE-CS	I201320		HE-7A	ISI	-	-	-	-	-	-	-
HEF1.20C	MS-43 (S16)		VARIABLE SPRING	AUG	-	-	-	-	-	-	-
Q	MS			OWN	-	-	-	-	-	-	-
				PRE	-	-	-	-	s	-	-
HE-CS	I201340		HE-7A	ISI	-	-	-	-	-	-	-
HEF1.20C	MS-167 (S17)		HYDRAULIC SNUBBER	AUG	-	-	-	-	-	-	-
Q	MS			OWN	-	-	-	-	-	-	-
				PRE	-	-	-	-	-	-	-
HE-CS	I201360		HE-7A	ISI	-	-	-	-	-	-	-
HEF1.20C	MS-153 (S18)		VARIABLE SPRING	AUG	-	-	-	-	-	-	-
Q	MS			OWN	-	-	-	-	-	-	-
				PRE	-	-	-	-	-	-	-
HE-CS	I201380		HE-7A	ISI	-	-	-	-	-	-	-
HEF1.20C	MS-44 (S19)		VARIABLE SPRING	AUG	-	-	-	-	-	-	-
Q	MS			OWN	-	-	-	-	-	-	-
				PRE	-	-	-	-	-	-	-
HE-CS	I201400		HE-7A	ISI	-	-	-	-	-	-	-
HEF1.20C	MS-149 (S20)		HYDRAULIC SNUBBER (IA)	AUG	-	-	-	-	-	-	-
Q	MS			OWN	-	-	-	-	-	-	-
				PRE	-	-	-	-	-	-	-
HE-CS	I201420	PSI/VT/VT-106	HE-7A	ISI	-	-	-	-	-	-	-
HEF1.20C	MS-45 (S21)		VARIABLE SPRING	AUG	-	-	-	-	-	-	-
Q	MS			OWN	-	-	-	-	-	-	-
				PRE	-	-	-	s	-	-	-
HE-CS	I201440	PSI/VT/VT-106	HE-7A	ISI	-	-	-	-	-	-	-
HEF1.20C	MS-46 (S22)		VARIABLE SPRING (IA)	AUG	-	-	-	-	-	-	-
Q	MS			OWN	-	-	-	-	-	-	-
				PRE	-	-	-	s	-	-	-

Category, ItemNO, Class	Summary / CompID / System	Scope / Method / Procedure	Iso No. Comp. Desc. Code Case		Period 1 00	Period 1 02	Period 2 03	Period 2 05	Period 2 06	Period 3 08	Period 3 09
HE-CS	I201500		B-11	ISI	-	-	-	-	-	-	-
HEF1.20C	FWU-16		VARIABLE SPRING	AUG	-	-	-	-	-	-	-
Q	FW			OWN	-	-	-	-	-	-	-
				PRE	-	-	-	-	-	-	-
HE-CS	I201520		B-11	ISI	-	-	-	-	-	-	-
HEF1.20C	FWU-17		MECHANICAL SNUBBER	AUG	-	-	-	-	-	-	-
Q	FW			OWN	-	-	-	-	-	-	-
				PRE	-	-	-	-	-	-	-
HE-CS	I201540		B-11	ISI	-	-	-	-	-	-	-
HEF1.20C	FWU-18		MECHANICAL SNUBBER (IA)	AUG	-	-	-	-	-	-	-
Q	FW			OWN	-	-	-	-	-	-	-
				PRE	-	-	-	-	-	-	-
HE-CS	I201560		B-11	ISI	-	-	-	-	-	-	-
HEF1.20C	FWU-19		VARIABLE SPRING	AUG	-	-	-	-	-	-	-
Q	FW			OWN	-	-	-	-	-	s	-
				PRE	-	-	-	-	-	-	-
HE-CS	I201580		HE-5	ISI	-	-	-	-	-	-	-
HEF1.20C	FWU-20		MECHANICAL SNUBBER	AUG	-	-	-	-	-	-	-
Q	FW			OWN	-	-	-	-	-	-	-
				PRE	-	-	-	-	-	-	-
HE-CS	I201600		HE-5	ISI	-	-	-	-	-	-	-
HEF1.20C	FWU-21		HYDRAULIC SNUBBER (IA)	AUG	-	-	-	-	-	-	-
Q	FW			OWN	-	-	-	-	-	-	-
				PRE	-	-	-	-	-	-	-
HE-CS	I201620	OWN/VT/VT-106	HE-5	ISI	-	-	-	-	-	-	-
HEF1.20C	FWU-22	OWN/VT/VT-106	VARIABLE SPRING	AUG	-	-	-	-	-	-	-
Q	FW			OWN	c	-	E	-	-	-	-
				PRE	-	-	-	-	s	b	-
HE-CS	I201640		HE-5	ISI	-	-	-	-	-	-	-
HEF1.20C	FWU-23		MECHANICAL SNUBBER	AUG	-	-	-	-	-	-	-
Q	FW			OWN	-	-	-	-	-	-	-
				PRE	-	-	-	-	-	-	-
HE-CS	I201660		HE-5	ISI	-	-	-	-	-	-	-
HEF1.20C	FWU-24		MECHANICAL SNUBBER	AUG	-	-	-	-	-	-	-
Q	FW			OWN	-	-	-	-	-	-	-
				PRE	-	-	-	-	-	-	-
HE-CS	I201680		HE-5	ISI	-	-	-	-	-	-	-
HEF1.20C	FWU-25		VARIABLE SPRING	AUG	-	-	-	-	-	-	-
Q	FW			OWN	-	-	-	-	-	-	-
				PRE	-	-	-	-	-	-	-

Category, ItemNO, Class	Summary / CompID / System	Scope / Method / Procedure	Iso No. Comp. Desc. Code Case		Period 1 00	Period 1 02	Period 2 03	Period 2 05	Period 2 06	Period 3 08	Period 3 09
HE-CS	I201700		HE-5	ISI	-	-	-	-	-	-	-
HEF1.20C	FWU-26		MECHANICAL SNUBBER (IA)	AUG	-	-	-	-	-	-	-
Q	FW			OWN	-	-	-	-	-	-	-
				PRE	-	-	-	-	-	-	-
HE-CS	I201820		B-14	ISI	-	-	-	-	-	-	-
HEF1.20C	FWU-40		MECHANICAL SNUBBER	AUG	-	-	-	-	-	-	-
Q	FW			OWN	-	-	-	-	-	-	-
				PRE	-	-	-	-	-	-	-
HE-CS	I201840	OWN/VT/VT-106	B-14	ISI	-	-	-	-	-	-	-
HEF1.20C	FWU-39		MECHANICAL SNUBBER (IA)	AUG	-	-	-	-	-	-	-
Q	FW			OWN	-	-	c	-	-	-	-
				PRE	-	-	-	-	-	-	-
HE-CS	I201860	OWN/VT/VT-106	B-14	ISI	-	-	-	-	-	-	-
HEF1.20C	FWU-38		MECHANICAL SNUBBER	AUG	-	-	-	-	-	-	-
Q	FW			OWN	-	c	-	-	-	-	-
				PRE	-	-	-	-	-	-	-
HE-CS	I201880		B-14	ISI	-	-	-	-	-	-	-
HEF1.20C	FWU-37		VARIABLE SPRING	AUG	-	-	-	-	-	-	-
Q	FW			OWN	-	-	-	-	-	-	-
				PRE	-	-	-	-	-	-	-
HE-CS	I201920		B-14	ISI	-	-	-	-	-	-	-
HEF1.20C	FWU-35		VARIABLE SPRING	AUG	-	-	-	-	-	-	-
Q	FW			OWN	-	-	-	-	-	-	-
				PRE	-	-	-	-	-	-	-
HE-CS	I201960		HE-5	ISI	-	-	-	-	-	-	-
HEF1.20C	FWU-32		MECHANICAL SNUBBER	AUG	-	-	-	-	-	-	-
Q	FW			OWN	-	-	-	-	-	-	-
				PRE	-	-	-	-	-	-	-
HE-CS	I201980		HE-5	ISI	-	-	-	-	-	-	-
HEF1.20C	FWU-33		HYDRAULIC SNUBBER	AUG	-	-	-	-	-	-	-
Q	FW			OWN	-	-	-	-	-	-	-
				PRE	-	-	-	-	-	-	-
HE-CS	I202000		HE-5	ISI	-	-	-	-	-	-	-
HEF1.20C	FWU-31		VARIABLE SPRING	AUG	-	-	-	-	-	-	-
Q	FW			OWN	-	-	-	-	-	-	-
				PRE	-	-	-	-	-	-	-
HE-CS	I202100		HE-6	ISI	-	-	-	-	-	-	-
HEF1.20C	FW-37 (S25)		VARIABLE SPRING	AUG	-	-	-	-	-	-	-
Q	FW			OWN	-	-	-	-	-	-	-
				PRE	-	-	-	-	-	-	-

Category, ItemNO, Class	Summary / CompID / System	Scope / Method / Procedure	Iso No. Comp. Desc. Code Case		Period 1 00	Period 1 02	Period 2 03	Period 2 05	Period 2 06	Period 3 08	Period 3 09
HE-CS	I202120		HE-6	ISI	-	-	-	-	-	-	-
HEF1.20C	FW-38 (S26)		VARIABLE SPRING	AUG	-	-	-	-	-	-	-
Q	FW			OWN	-	-	-	-	-	-	-
				PRE	-	-	-	-	-	-	-
HE-CS	I202140		HE-6	ISI	-	-	-	-	-	-	-
HEF1.20C	FW-39 (S27)		VARIABLE SPRING	AUG	-	-	-	-	-	-	-
Q	FW			OWN	-	-	-	-	-	-	-
				PRE	-	-	-	-	-	-	-
HE-CS	I202160		HE-6	ISI	-	-	-	-	-	-	-
HEF1.20C	FW-40 (S28)		VARIABLE SPRING	AUG	-	-	-	-	-	-	-
Q	FW			OWN	-	-	-	-	-	-	-
				PRE	-	-	-	-	-	-	-
HE-CS	I202180		HE-6	ISI	-	-	-	-	-	-	-
HEF1.20C	FW-41 (S29)		VARIABLE SPRING	AUG	-	-	-	-	-	-	-
Q	FW			OWN	-	-	-	-	-	-	-
				PRE	-	-	-	-	-	-	-
HE-CS	I202200		HE-6	ISI	-	-	-	-	-	-	-
HEF1.20C	FW-42 (S30)		VARIABLE SPRING	AUG	-	-	-	-	-	-	-
Q	FW			OWN	-	-	-	-	-	-	-
				PRE	-	-	-	-	-	-	-
HE-CS	I202220	PSI/VT/VT-106	HE-6	ISI	-	-	-	-	-	-	-
HEF1.20C	FW-43 (S31)		VARIABLE SPRING	AUG	-	-	-	-	-	-	-
Q	FW			OWN	-	-	-	-	-	-	-
				PRE	-	-	-	s	-	-	-
HE-DB	I200005	AUG/VT/VT-103	B-9	ISI	-	-	-	-	-	-	-
DB	D	AUG/MT/MT-105	PIPE-TO-ELBOW PEN. 401	AUG	c	-	-	-	-	-	-
2	MS	AUG/RT/RT-104		OWN	-	-	-	-	-	-	-
				PRE	-	-	-	-	-	-	-
HE-DB	I200010	AUG/VT/VT-103	B-9	ISI	-	-	-	-	-	-	-
DB	D1	AUG/MT/MT-105	ELBOW-TO-PIPE	AUG	c	-	-	-	-	-	-
2	MS	AUG/RT/RT-104		OWN	-	-	-	-	-	-	-
				PRE	-	-	-	-	-	-	-
HE-DB	I200015	AUG/VT/VT-103	B-9	ISI	-	-	-	-	-	-	-
DB	F1	AUG/MT/MT-105	ELBOW-TO-PIPE	AUG	-	-	-	-	-	s	-
2	MS	AUG/RT/RT-104		OWN	c	-	-	-	-	-	-
		OWN/RT/RT-104		PRE	-	-	-	-	-	-	-
HE-DB	I200020	AUG/VT/VT-103	B-9A	ISI	-	-	-	-	-	-	-
DB	L1	AUG/MT/MT-105	REDUCER-TO-TEE	AUG	-	c	-	-	-	-	-
Q	MS	AUG/RT/RT-104		OWN	-	-	-	-	-	-	-
				PRE	-	-	-	-	-	-	-

Category, ItemNO, Class	Summary / CompID / System	Scope / Method / Procedure	Iso No. Comp. Desc. Code Case		Period 1 00	Period 1 02	Period 2 03	Period 2 05	Period 2 06	Period 3 08	Period 3 09
HE-DB	I200025	AUG/VT/VT-103	HE-7	ISI	-	-	-	-	-	-	-
DB	L2	AUG/MT/MT-105	TEE-TO-PIPE	AUG	-	c	-	-	-	-	-
Q	MS	AUG/RT/RT-104		OWN	-	-	-	-	-	-	-
		AUG/PT/PT-106		PRE	-	-	-	-	-	-	-
HE-DB	I200030	AUG/VT/VT-103	B-10A	ISI	-	-	-	-	-	-	-
DB	D	AUG/MT/MT-105	PIPE-TO-ELBOW PEN. 402	AUG	-	-	c	-	-	-	-
2	MS	AUG/RT/RT-104		OWN	c	-	-	-	-	-	-
		OWN/VT/VT-103		PRE	-	-	-	-	-	-	-
HE-DB	I200035	OWN/RT/RT-104	B-10A	ISI	-	-	-	-	-	-	-
DB	H1	OWN/MT/MT-105	PIPE-TO-ELBOW	AUG	-	-	-	-	-	s	-
2	MS	OWN/VT/VT-103		OWN	-	c	-	-	-	-	-
		AUG//		PRE	-	-	-	-	-	-	-
HE-DB	I200040	AUG/VT/VT-103	B-10A	ISI	-	-	-	-	-	-	-
DB	J1	AUG/MT/MT-105	PIPE-TO-ELBOW	AUG	-	-	-	-	-	s	-
2	MS	AUG/UT/UT-202		OWN	c	-	-	-	-	-	-
		OWN/UT/UT-202		PRE	-	-	-	-	-	-	-
HE-DB	I200045	OWN/RT/RT-104	B-10	ISI	-	-	-	-	-	-	-
DB	P1	OWN/PT/PT-106	REDUCER-TO-TEE	AUG	-	-	c	-	-	-	-
Q	MS	OWN/MT/MT-105		OWN	-	c	-	-	-	-	-
		OWN/VT/VT-103		PRE	-	-	-	-	-	-	-
HE-DB	I200050	OWN/UT/UT-209	HE-6	ISI	-	-	-	-	-	-	-
DB	M3	OWN/MT/MT-105	PIPE-TO-TEE	AUG	-	-	-	-	-	s	-
Q	FW	OWN/VT/VT-103		OWN	-	c	-	-	-	-	-
		AUG//		PRE	-	-	-	-	-	-	-
HE-DB	I200055	OWN/UT/UT-209	HE-5	ISI	-	-	-	-	-	-	-
DB	M4	OWN/PT/PT-106	TEE-TO-REDUCER	AUG	-	-	-	-	-	s	-
Q	FW	OWN/MT/MT-105		OWN	-	c	-	-	-	-	-
		OWN/VT/VT-103		PRE	-	-	-	-	-	-	-
HE-DB	I200060	OWN/UT/UT-202	HE-5	ISI	-	-	-	-	-	-	-
DB	U1	OWN/MT/MT-105	ELBOW-TO-PIPE	AUG	-	-	c	-	-	-	-
Q	FW	OWN/VT/VT-103		OWN	c	-	-	-	-	-	-
		AUG/UT/UT-209		PRE	-	-	-	-	-	-	-
HE-DB	I200065	OWN/UT/UT-202	HE-5	ISI	-	-	-	-	-	-	-
DB	U2	OWN/MT/MT-105	PIPE-TO-ELBOW	AUG	-	-	c	-	-	-	-
Q	FW	OWN/VT/VT-103		OWN	c	-	-	-	-	-	-
		AUG/UT/UT-209		PRE	-	-	-	-	-	-	-
HE-DB	I200070	OWN/VT/VT-103	B-11	ISI	-	-	-	-	-	-	-
DB	AA	OWN/MT/MT-105	PIPE-TO-PIPE	AUG	-	-	-	-	-	s	-
2	FW	OWN/UT/UT-209		OWN	c	-	-	-	-	-	-
		AUG//		PRE	-	-	-	-	-	-	-

Category, ItemNO, Class	Summary / CompID / System	Scope / Method / Procedure	Iso No. Comp. Desc. Code Case		Period 1 00	Period 1 02	Period 2 03	Period 2 05	Period 2 06	Period 3 08	Period 3 09
HE-DB	I200075	AUG/VT/VT-103	HE-5	ISI	-	-	-	-	-	-	-
DB	A1	AUG/MT/MT-105	TEE-TO-REDUCER	AUG	-	c	-	-	-	-	-
Q	FW	AUG/UT/UT-209		OWN	-	-	-	-	-	-	-
		AUG/PT/PT-106		PRE	-	-	-	-	-	-	-
HE-DB	I200080	AUG/VT/VT-103	HE-5	ISI	-	-	-	-	-	-	-
DB	F4	AUG/MT/MT-105	ELBOW-TO-PIPE	AUG	-	-	c	-	-	-	-
Q	FW	AUG/UT/UT-209		OWN	c	-	-	-	-	-	-
		OWN/VT/VT-103		PRE	-	-	-	-	-	-	-
HE-DB	I200085	AUG/VT/VT-103	B-14	ISI	-	-	-	-	-	-	-
DB	N	AUG/MT/MT-105	VALVE(3994)-TO-ELBOW	AUG	-	c	-	-	-	-	-
2	FW	AUG/UT/UT-209		OWN	-	-	-	-	-	-	-
				PRE	-	-	-	-	-	-	-
HE-DB	I200090	AUG/VT/VT-103	B-14	ISI	-	-	-	-	-	-	-
DB	V	AUG/MT/MT-105	ELBOW-TO-PIPE PEN. 404	AUG	-	-	c	-	-	-	-
2	FW	AUG/UT/UT-209		OWN	c	-	-	-	-	-	-
		OWN/VT/VT-103		PRE	-	-	-	-	-	-	-
HE-IA	I201001	OWN/MT/MT-105	HE-7	ISI	-	-	-	-	-	-	-
HEC3.20	MSU-35 (IA)	OWN/RT/RT-104	INTEGRAL ATTACHMENT	AUG	-	-	-	-	-	-	-
Q	MS	AUG/UT/UT-209		OWN	c	-	-	-	-	-	-
				PRE	-	-	-	-	-	-	-
HE-IA	I201021		HE-7	ISI	-	-	-	-	-	-	-
HEC3.20	MS-34 (S1) (IA)		INTEGRAL ATTACHMENT	AUG	-	-	-	-	-	-	-
Q	MS			OWN	-	-	-	-	-	-	-
				PRE	-	-	-	-	-	-	-
HE-IA	I201041		HE-7	ISI	-	-	-	-	-	-	-
HEC3.20	MS-35 (S2) (IA)		INTEGRAL ATTACHMENT	AUG	-	-	-	-	-	-	-
Q	MS			OWN	-	-	-	-	-	-	-
				PRE	-	-	-	-	-	-	-
HE-IA	I201051	OWN/MT/MT-105	HE-7	ISI	-	-	-	-	-	-	-
HEC3.20	MS-47 (S3) (IA)		INTEGRAL ATTACHMENT	AUG	-	-	-	-	-	-	-
Q	MS			OWN	-	-	c	-	-	-	-
				PRE	-	-	-	-	-	-	-
HE-IA	I201141		HE-7A	ISI	-	-	-	-	-	-	-
HEC3.20	MS-150 (S7) (IA)		INTEGRAL ATTACHMENT	AUG	-	-	-	-	-	-	-
Q	MS			OWN	-	-	-	-	-	-	-
				PRE	-	-	-	-	-	-	-
HE-IA	I201241		HE-7A	ISI	-	-	-	-	-	-	-
HEC3.20	MS-41 (S12) (IA)		INTEGRAL ATTACHMENT	AUG	-	-	-	-	-	-	-
Q	MS			OWN	-	-	-	-	-	-	-
				PRE	-	-	-	-	-	-	-

Category, ItemNO, Class	Summary / CompID / System	Scope / Method / Procedure	Iso No. Comp. Desc. Code Case		Period 1 00	Period 1 02	Period 2 03	Period 2 05	Period 2 06	Period 3 08	Period 3 09
HE-IA	I201401		HE-7A	ISI	-	-	-	-	-	-	-
HEC3.20	MS-149 (S20) (IA)		INTEGRAL ATTACHMENT	AUG	-	-	-	-	-	-	-
Q	MS			OWN	-	-	-	-	-	-	-
				PRE	-	-	-	-	-	-	-
HE-IA	I201441		HE-7A	ISI	-	-	-	-	-	-	-
HEC3.20	MS-46 (S22) (IA)		INTEGRAL ATTACHMENT	AUG	-	-	-	-	-	-	-
Q	MS			OWN	-	-	-	-	-	-	-
				PRE	-	-	-	-	-	-	-
HE-IA	I201541		B-11	ISI	-	-	-	-	-	-	-
HEC3.20	FWU-18 (IA)		INTEGRAL ATTACHMENT	AUG	-	-	-	-	-	-	-
Q	FW			OWN	-	-	-	-	-	-	-
				PRE	-	-	-	-	-	-	-
HE-IA	I201601		HE-5	ISI	-	-	-	-	-	-	-
HEC3.20	FWU-21 (IA)		INTEGRAL ATTACHMENT	AUG	-	-	-	-	-	-	-
Q	FW			OWN	-	-	-	-	-	-	-
				PRE	-	-	-	-	-	-	-
HE-IA	I201701		HE-5	ISI	-	-	-	-	-	-	-
HEC3.20	FWU-26 (IA)		INTEGRAL ATTACHMENT	AUG	-	-	-	-	-	-	-
Q	FW			OWN	-	-	-	-	-	-	-
				PRE	-	-	-	-	-	-	-
HE-IA	I201721		HE-5	ISI	-	-	-	-	-	-	-
HEC3.20	FWU-27 (IA)		INTEGRAL ATTACHMENT	AUG	-	-	-	-	-	-	-
Q	FW			OWN	-	-	-	-	-	s	-
				PRE	-	-	-	-	-	-	-
HE-IA	I201741		HE-5	ISI	-	-	-	-	-	-	-
HEC3.20	FWU-28 (IA)		INTEGRAL ATTACHMENT	AUG	-	-	-	-	-	-	-
Q	FW			OWN	-	-	-	-	-	-	-
				PRE	-	-	-	-	-	-	-
HE-IA	I201841		B-14	ISI	-	-	-	-	-	-	-
HEC3.20	FWU-39 (IA)		INTEGRAL ATTACHMENT	AUG	-	-	-	-	-	-	-
Q	FW			OWN	-	-	-	-	-	-	-
				PRE	-	-	-	-	-	-	-
HE-IA	I202041		HE-5	ISI	-	-	-	-	-	-	-
HEC3.20	FWU-29 (IA)		INTEGRAL ATTACHMENT	AUG	-	-	-	-	-	-	-
Q	FW			OWN	-	-	-	-	-	-	-
				PRE	-	-	-	-	-	-	-
HE-IA	I202241		HE-6	ISI	-	-	-	-	-	-	-
HEC3.20	FW-45 (S32) (IA)		INTEGRAL ATTACHMENT	AUG	-	-	-	-	-	-	-
Q	FW			OWN	-	-	-	-	-	-	-
				PRE	-	-	-	-	-	-	-

Category, ItemNO, Class	Summary / CompID / System	Scope / Method / Procedure	Iso No. Comp. Desc. Code Case		Period 1 00	Period 1 02	Period 2 03	Period 2 05	Period 2 06	Period 3 08	Period 3 09
HE-IA	I202361		HE-6	ISI	-	-	-	-	-	-	-
HEC3.20	CD-170 (S38) (IA)		INTEGRAL ATTACHMENT	AUG	-	-	-	-	-	-	-
Q	FW			OWN	-	-	-	-	-	-	-
				PRE	-	-	-	-	-	-	-
HE-LK	I411400	OWN/VT/VT-109	L-1	ISI	-	-	-	-	-	-	-
LEAK	MS HIGH ENERGY	OWN/VT/VT-109	HE MS LEAKAGE EXAM	AUG	-	-	-	-	-	-	-
4	MS			OWN	-	c	-	b	-	b	-
				PRE	-	-	-	-	-	-	-
HE-LK	I412200	OWN/VT/VT-109	L-1	ISI	-	-	-	-	-	-	-
LEAK	HE FEEDWATER	OWN/VT/VT-109	HE FW LEAKAGE EXAMINATION	AUG	-	-	-	-	-	-	-
4	FW			OWN	c	-	-	b	-	b	-
				PRE	-	-	-	-	-	-	-
Life1	I008210	OWN/PT/PT-106	A-8	ISI	-	-	-	-	-	-	-
Life1	RHE-3 Cap		SHELL TO HEAD CAP	AUG	-	-	-	-	-	-	-
1	CVCS-LTDN			OWN	-	-	c	-	-	-	-
				PRE	-	-	-	-	-	-	-
SG-ET	I802600		*	ISI	-	-	-	-	-	-	-
ET-1	OPEN GENERATOR TUBES		PERIPHERAL TUBES - S/G A	AUG	-	-	-	t	t	t	t
1	SG			OWN	-	-	-	-	-	-	-
				PRE	-	-	-	-	-	-	-
SG-ET	I803600		*	ISI	-	-	-	-	-	-	-
ET-1	OPEN GENERATOR TUBES		PERIPHERAL TUBES - S/G B	AUG	-	-	-	t	t	t	t
1	SG			OWN	-	-	-	-	-	-	-
				PRE	-	-	-	-	-	-	-
SG-VT	I802900	AUG/VT/VT-103	*	ISI	-	-	-	-	-	-	-
VT	EXISTING PLUGS		EXISTING PLUGS - S/G A	AUG	-	-	-	s	-	-	-
1	SG			OWN	-	-	-	-	-	-	-
				PRE	-	-	-	-	-	-	-
SG-VT	I803900	AUG/VT/VT-103	*	ISI	-	-	-	-	-	-	-
VT	EXISTING PLUGS		EXISTING PLUGS - S/G B	AUG	-	-	-	s	-	-	-
1	SG			OWN	-	-	-	-	-	-	-
				PRE	-	-	-	-	-	-	-
SN-FT	I600081	AUG/VT/FT	A-7F	ISI	-	-	-	-	-	-	-
FT	SGA-7		HYDRAULIC SNUBBER	AUG	-	-	-	s	-	-	-
1	SG		Snubber FT Prog.	OWN	-	-	-	-	-	-	-
				PRE	-	-	-	-	-	-	-
SN-FT	I600091	AUG/VT/FT	A-7F	ISI	-	-	-	-	-	-	-
FT	SGA-8		HYDRAULIC SNUBBER	AUG	-	c	-	-	-	b	-
1	SG			OWN	-	-	-	-	-	-	-
				PRE	-	-	-	-	-	-	-

Category, ItemNO, Class	Summary / CompID / System	Scope / Method / Procedure	Iso No. Comp. Desc. Code Case		Period 1 00	Period 1 02	Period 2 03	Period 2 05	Period 2 06	Period 3 08	Period 3 09
SN-FT	I600121	AUG/VT/FT	A-7F	ISI	-	-	-	-	-	-	-
FT	SGB-3	AUG/VT/FT	HYDRAULIC SNUBBER	AUG	c	-	-	-	b	-	-
1	SG			OWN	-	-	-	-	-	-	-
				PRE	-	-	-	-	-	-	-
SN-FT	I600131	AUG/VT/FT	A-7F	ISI	-	-	-	-	-	-	-
FT	SGB-4	AUG/VT/FT	HYDRAULIC SNUBBER	AUG	-	-	c	-	-	-	b
1	SG			OWN	-	-	-	-	-	-	-
				PRE	-	-	-	-	-	-	-
SN-FT	I600201		C-16	ISI	-	-	-	-	-	-	-
FT	AFU-3		MECHANICAL SNUBBER	AUG	-	-	-	-	-	-	-
3	AFW			OWN	-	-	-	-	-	-	-
				PRE	-	-	-	-	-	-	-
SN-FT	I600221	AUG/VT/FT	C-1E	ISI	-	-	-	-	-	-	-
FT	AFU-31		MECHANICAL SNUBBER	AUG	-	c	-	-	-	-	-
3	AFW			OWN	-	-	-	-	-	-	-
				PRE	-	-	-	-	-	-	-
SN-FT	I600241	AUG/VT/FT	C-1E	ISI	-	-	-	-	-	-	-
FT	AFU-34		MECHANICAL SNUBBER	AUG	-	-	-	-	-	-	s
3	AFW			OWN	-	-	-	-	-	-	-
				PRE	-	-	-	-	-	-	-
SN-FT	I600261	AUG/VT/FT	C-1A	ISI	-	-	-	-	-	-	-
FT	AFU-52		MECHANICAL SNUBBER	AUG	-	-	-	s	-	-	-
3	AFW			OWN	-	-	-	-	-	-	-
				PRE	-	-	-	-	-	-	-
SN-FT	I600281	AUG/VT/FT	C-1B	ISI	-	-	-	-	-	-	-
FT	AFU-75		MECHANICAL SNUBBER	AUG	-	-	-	-	-	-	s
3	AFW			OWN	-	-	-	-	-	-	-
				PRE	-	-	-	-	-	-	-
SN-FT	I600301		C-1B	ISI	-	-	-	-	-	-	-
FT	AFU-98		MECHANICAL SNUBBER	AUG	-	-	-	-	-	-	-
2	AFW			OWN	-	-	-	-	-	-	-
				PRE	-	-	-	-	-	-	-
SN-FT	I600321		C-1C	ISI	-	-	-	-	-	-	-
FT	AFU-101		MECHANICAL SNUBBER	AUG	-	-	-	-	-	-	-
3	AFW			OWN	-	-	-	-	-	-	-
				PRE	-	-	-	-	-	-	-
SN-FT	I600341	AUG/VT/FT	C-1C	ISI	-	-	-	-	-	-	-
FT	AFU-103 (EAST)		MECHANICAL SNUBBER	AUG	c	-	-	-	-	-	-
3	AFW			OWN	-	-	-	-	-	-	-
				PRE	-	-	-	-	-	-	-

Category, ItemNO, Class	Summary / CompID / System	Scope / Method / Procedure	Iso No. Comp. Desc. Code Case		Period 1 00	Period 1 02	Period 2 03	Period 2 05	Period 2 06	Period 3 08	Period 3 09
SN-FT	I600342	AUG/VT/FT	C-1C	ISI	-	-	-	-	-	-	-
FT	AFU-103 (WEST)		MECHANICAL SNUBBER	AUG	c	-	-	-	-	-	-
3	AFW			OWN	-	-	-	-	-	-	-
				PRE	-	-	-	-	-	-	-
SN-FT	I600361	AUG/VT/FT	C-1A	ISI	-	-	-	-	-	-	-
FT	AFU-109	AUG/VT/FT	HYDRAULIC SNUBBER	AUG	c	B	B	-	b	-	-
2	AFW	AUG/VT/FT		OWN	-	-	-	-	-	-	-
		AUG//		PRE	-	-	-	-	-	-	-
SN-FT	I600381	AUG/VT/FT	C-1A	ISI	-	-	-	-	-	-	-
FT	AFU-111	AUG/VT/FT	MECHANICAL SNUBBER	AUG	c	B	-	-	-	-	-
2	AFW			OWN	-	-	-	-	-	-	-
				PRE	-	-	-	-	-	-	-
SN-FT	I600401		C-1A	ISI	-	-	-	-	-	-	-
FT	AFU-123		MECHANICAL SNUBBER	AUG	-	-	-	-	-	-	s
2	AFW			OWN	-	-	-	-	-	-	-
				PRE	-	-	-	-	-	-	-
SN-FT	I600421	AUG/VT/FT	C-1A	ISI	-	-	-	-	-	-	-
FT	AFU-124		MECHANICAL SNUBBER	AUG	-	-	c	-	-	-	-
2	AFW			OWN	-	-	-	-	-	-	-
				PRE	-	-	-	-	-	-	-
SN-FT	I600461		B-31	ISI	-	-	-	-	-	-	-
FT	BDU-16		MECHANICAL SNUBBER	AUG	-	-	-	-	-	-	s
2	SG			OWN	-	-	-	-	-	-	-
				PRE	-	-	-	-	-	-	-
SN-FT	I600531		B-29	ISI	-	-	-	-	-	-	-
FT	CCU-43		MECHANICAL SNUBBER	AUG	-	-	-	-	-	-	-
2	AC			OWN	-	-	-	-	-	-	-
				PRE	-	-	-	-	-	-	-
SN-FT	I600611		C-34	ISI	-	-	-	-	-	-	-
FT	CCU-57		MECHANICAL SNUBBER	AUG	-	-	-	-	s	-	-
2	AC			OWN	-	-	-	-	-	-	-
				PRE	-	-	-	-	-	-	-
SN-FT	I600711	AUG/VT/FT	B-30	ISI	-	-	-	-	-	-	-
FT	CCU-71		MECHANICAL SNUBBER	AUG	-	-	c	-	-	-	-
2	AC			OWN	-	-	-	-	-	-	-
				PRE	-	-	-	-	-	-	-
SN-FT	I600881		A-23	ISI	-	-	-	-	-	-	-
FT	CVU-26		MECHANICAL SNUBBER	AUG	-	-	-	-	-	s	-
1	CVCS-LTDN			OWN	-	-	-	-	-	-	-
				PRE	-	-	-	-	-	-	-

Category, ItemNO, Class	Summary / CompID / System	Scope / Method / Procedure	Iso No. Comp. Desc. Code Case		Period 1 00	Period 1 02	Period 2 03	Period 2 05	Period 2 06	Period 3 08	Period 3 09
SN-FT	I600901		A-30	ISI	-	-	-	-	-	-	-
FT	CVU-46		MECHANICAL SNUBBER	AUG	-	-	-	-	s	-	-
2	CVCS-CHRG			OWN	-	-	-	-	-	-	-
				PRE	-	-	-	-	-	-	-
SN-FT	I600921	AUG/VT/FT	A-27	ISI	-	-	-	-	-	-	-
FT	CVU-49		MECHANICAL SNUBBER	AUG	c	-	-	-	-	-	-
2	CVCS-CHRG			OWN	-	-	-	-	-	-	-
				PRE	-	-	-	-	-	-	-
SN-FT	I600941		B-32	ISI	-	-	-	-	-	-	-
FT	CVU-80		MECHANICAL SNUBBER	AUG	-	-	-	-	s	-	-
2	CVCS-LTDN			OWN	-	-	-	-	-	-	-
				PRE	-	-	-	-	-	-	-
SN-FT	I600961	AUG/VT/FT	A-32	ISI	-	-	-	-	-	-	-
FT	CVU-103		MECHANICAL SNUBBER	AUG	c	-	-	-	-	-	-
1	CVCS-CHRG			OWN	-	-	-	-	-	-	-
				PRE	-	-	-	-	-	-	-
SN-FT	I600981	AUG/VT/FT	A-32	ISI	-	-	-	-	-	-	-
FT	CVU-104		MECHANICAL SNUBBER	AUG	-	c	-	-	-	-	-
1	CVCS-CHRG			OWN	-	-	-	-	-	-	-
				PRE	-	-	-	-	-	-	-
SN-FT	I601001		B-34	ISI	-	-	-	-	-	-	-
FT	CVU-186		MECHANICAL SNUBBER	AUG	-	-	-	-	-	-	-
2	CVCS-CHRG			OWN	-	-	-	-	-	-	-
				PRE	-	-	-	-	-	-	-
SN-FT	I601041	AUG/VT/FT	B-35	ISI	-	-	-	-	-	-	-
FT	CVU-345	AUG/VT/FT	MECHANICAL SNUBBER	AUG	-	c	B	-	-	-	-
Q	CVCS-LTDN			OWN	-	-	-	-	-	-	-
				PRE	-	-	-	-	-	-	-
SN-FT	I601061	AUG/VT/FT	B-35	ISI	-	-	-	-	-	-	-
FT	CVU-351	AUG/VT/FT	MECHANICAL SNUBBER	AUG	-	E	-	s	-	-	-
Q	CVCS-LTDN			OWN	-	-	-	-	-	-	-
				PRE	-	-	-	-	-	-	-
SN-FT	I601081		B-36	ISI	-	-	-	-	-	-	-
FT	CVU-372		MECHANICAL SNUBBER	AUG	-	-	-	-	-	-	s
Q	CVCS-LTDN			OWN	-	-	-	-	-	-	-
				PRE	-	-	-	-	-	-	-
SN-FT	I601101	AUG/VT/FT	B-12	ISI	-	-	-	-	-	-	-
FT	FWU-3		HYDRAULIC SNUBBER	AUG	-	-	-	s	-	-	-
2	FW			OWN	-	-	-	-	-	-	-
				PRE	-	-	-	-	-	-	-

Category, ItemNO, Class	Summary / CompID / System	Scope / Method / Procedure	Iso No. Comp. Desc. Code Case		Period 1 00	Period 1 02	Period 2 03	Period 2 05	Period 2 06	Period 3 08	Period 3 09
SN-FT	I601111		B-12	ISI	-	-	-	-	-	-	-
FT	FWU-5		HYDRAULIC SNUBBER	AUG	-	-	-	-	-	s	-
2	FW			OWN	-	-	-	-	-	-	-
				PRE	-	-	-	-	-	-	-
SN-FT	I601121	AUG/VT/FT	B-13	ISI	-	-	-	-	-	-	-
FT	FWU-8		MECHANICAL SNUBBER	AUG	-	c	-	-	-	-	-
2	FW			OWN	-	-	-	-	-	-	-
				PRE	-	-	-	-	-	-	-
SN-FT	I601131	AUG/VT/FT	B-13	ISI	-	-	-	-	-	-	-
FT	FWU-12		MECHANICAL SNUBBER	AUG	-	-	c	-	-	-	-
2	FW			OWN	-	-	-	-	-	-	-
				PRE	-	-	-	-	-	-	-
SN-FT	I601141		B-11	ISI	-	-	-	-	-	-	-
FT	FWU-15		MECHANICAL SNUBBER	AUG	-	-	-	-	-	-	-
2	FW			OWN	-	-	-	-	-	-	-
				PRE	-	-	-	-	-	-	-
SN-FT	I601151	AUG/VT/FT	B-11	ISI	-	-	-	-	-	-	-
FT	FWU-17		MECHANICAL SNUBBER	AUG	c	-	-	-	-	-	-
Q	FW			OWN	-	-	-	-	-	-	-
				PRE	-	-	-	-	-	-	-
SN-FT	I601161		B-11	ISI	-	-	-	-	-	-	-
FT	FWU-18		MECHANICAL SNUBBER	AUG	-	-	-	-	-	-	-
Q	FW			OWN	-	-	-	-	-	-	-
				PRE	-	-	-	-	-	-	-
SN-FT	I601171	AUG/VT/FT	HE-5	ISI	-	-	-	-	-	-	-
FT	FWU-20		MECHANICAL SNUBBER	AUG	-	c	-	-	-	-	-
Q	FW			OWN	-	-	-	-	-	-	-
				PRE	-	-	-	-	-	-	-
SN-FT	I601181		HE-5	ISI	-	-	-	-	-	-	-
FT	FWU-21		HYDRAULIC SNUBBER	AUG	-	-	-	-	-	-	-
Q	FW			OWN	-	-	-	-	-	-	-
				PRE	-	-	-	-	-	-	-
SN-FT	I601191		HE-5	ISI	-	-	-	-	-	-	-
FT	FWU-23		MECHANICAL SNUBBER	AUG	-	-	-	-	-	-	-
Q	FW			OWN	-	-	-	-	-	-	-
				PRE	-	-	-	-	-	-	-
SN-FT	I601201		HE-5	ISI	-	-	-	-	-	-	-
FT	FWU-24		MECHANICAL SNUBBER	AUG	-	-	-	-	-	-	-
Q	FW			OWN	-	-	-	-	-	-	-
				PRE	-	-	-	-	-	-	-

Category, ItemNO, Class	Summary / CompID / System	Scope / Method / Procedure	Iso No. Comp. Desc. Code Case		Period 1 00	Period 1 02	Period 2 03	Period 2 05	Period 2 06	Period 3 08	Period 3 09
SN-FT	I601211		HE-5	ISI	-	-	-	-	-	-	-
FT	FWU-26 (EAST)		MECHANICAL SNUBBER	AUG	-	-	-	-	-	-	-
Q	FW			OWN	-	-	-	-	-	-	-
				PRE	-	-	-	-	-	-	-
SN-FT	I601212		HE-5	ISI	-	-	-	-	-	-	-
FT	FWU-26 (WEST)		MECHANICAL SNUBBER	AUG	-	-	-	-	-	-	-
Q	FW			OWN	-	-	-	-	-	-	-
				PRE	-	-	-	-	-	-	-
SN-FT	I601221		HE-5	ISI	-	-	-	-	-	-	-
FT	FWU-32		MECHANICAL SNUBBER	AUG	-	-	-	-	-	-	-
Q	FW			OWN	-	-	-	-	-	-	-
				PRE	-	-	-	-	-	-	-
SN-FT	I601231		B-14	ISI	-	-	-	-	-	-	-
FT	FWU-38		MECHANICAL SNUBBER	AUG	-	-	-	-	-	-	-
Q	FW			OWN	-	-	-	-	-	-	-
				PRE	-	-	-	-	-	-	-
SN-FT	I601241		B-14	ISI	-	-	-	-	-	-	-
FT	FWU-39		MECHANICAL SNUBBER	AUG	-	-	-	-	-	-	-
Q	FW			OWN	-	-	-	-	-	-	-
				PRE	-	-	-	-	-	-	-
SN-FT	I601251		B-14	ISI	-	-	-	-	-	-	-
FT	FWU-40		MECHANICAL SNUBBER	AUG	-	-	-	-	-	-	-
Q	FW			OWN	-	-	-	-	-	-	-
				PRE	-	-	-	-	-	-	-
SN-FT	I601261		B-14	ISI	-	-	-	-	-	-	-
FT	FWU-42		MECHANICAL SNUBBER	AUG	-	-	-	-	-	-	-
2	FW			OWN	-	-	-	-	-	-	-
				PRE	-	-	-	-	-	-	-
SN-FT	I601271	OWN/VT/FT	B-14	ISI	-	-	-	-	-	-	-
FT	FWU-44		HYDRAULIC SNUBBER	AUG	-	-	-	-	-	-	s
2	FW			OWN	-	c	-	-	-	-	-
				PRE	-	-	-	-	-	-	-
SN-FT	I601281		B-14	ISI	-	-	-	-	-	-	-
FT	FWU-47		MECHANICAL SNUBBER	AUG	-	-	-	-	-	-	-
2	FW			OWN	-	-	-	-	-	-	-
				PRE	-	-	-	-	-	-	-
SN-FT	I601291	AUG/VT/FT	B-14	ISI	-	-	-	-	-	-	-
FT	FWU-48		MECHANICAL SNUBBER	AUG	-	c	-	-	-	-	-
2	FW			OWN	-	-	-	-	-	-	-
				PRE	-	-	-	-	-	-	-

Category, ItemNO, Class	Summary / CompID / System	Scope / Method / Procedure	Iso No. Comp. Desc. Code Case		Period 1 00	Period 1 02	Period 2 03	Period 2 05	Period 2 06	Period 3 08	Period 3 09
SN-FT	I601301	AUG/VT/FT	B-14	ISI	-	-	-	-	-	-	-
FT	FWU-51		MECHANICAL SNUBBER	AUG	-	c	-	-	-	-	-
2	FW			OWN	-	-	-	-	-	-	-
				PRE	-	-	-	-	-	-	-
SN-FT	I601311	AUG/VT/FT	B-14	ISI	-	-	-	-	-	-	-
FT	FWU-52		MECHANICAL SNUBBER	AUG	-	-	c	-	-	-	-
2	FW			OWN	-	-	-	-	-	-	-
				PRE	-	-	-	-	-	-	-
SN-FT	I601321	AUG/VT/FT	B-14	ISI	-	-	-	-	-	-	-
FT	FWU-54		MECHANICAL SNUBBER	AUG	-	-	-	s	-	-	-
2	FW			OWN	-	-	-	-	-	-	-
				PRE	-	-	-	-	-	-	-
SN-FT	I601331	AUG/VT/FT	B-14	ISI	-	-	-	-	-	-	-
FT	FWU-57		MECHANICAL SNUBBER	AUG	-	-	c	-	-	-	-
2	FW			OWN	-	-	-	-	-	-	-
				PRE	-	-	-	-	-	-	-
SN-FT	I601351	AUG/VT/FT	B-8	ISI	-	-	-	-	-	-	-
FT	MSU-2		MECHANICAL SNUBBER	AUG	-	-	c	-	-	-	-
2	MS			OWN	-	-	-	-	-	-	-
				PRE	-	-	-	-	-	-	-
SN-FT	I601361	AUG/VT/FT	B-8	ISI	-	-	-	-	-	-	-
FT	MSU-3		MECHANICAL SNUBBER	AUG	-	-	c	-	-	-	-
2	MS			OWN	-	-	-	-	-	-	-
				PRE	-	-	-	-	-	-	-
SN-FT	I601371	AUG/VT/FT	B-8	ISI	-	-	-	-	-	-	-
FT	MSU-7 (TOP/WEST)		MECHANICAL SNUBBER	AUG	-	-	-	s	-	-	-
2	MS			OWN	-	-	-	-	-	-	-
				PRE	-	-	-	-	-	-	-
SN-FT	I601372	AUG/VT/FT	B-8	ISI	-	-	-	-	-	-	-
FT	MSU-7 (BOTTOM/EAST)		MECHANICAL SNUBBER	AUG	-	-	-	s	-	-	-
2	MS			OWN	-	-	-	-	-	-	-
				PRE	-	-	-	-	-	-	-
SN-FT	I601381	AUG/VT/FT	B-8	ISI	-	-	-	-	-	-	-
FT	MSU-8		HYDRAULIC SNUBBER	AUG	c	-	-	-	-	-	-
2	MS			OWN	-	-	-	-	-	-	-
				PRE	-	-	-	-	-	-	-
SN-FT	I601391	AUG/VT/FT	B-10A	ISI	-	-	-	-	-	-	-
FT	MSU-12		MECHANICAL SNUBBER	AUG	-	c	-	-	-	-	b
2	MS			OWN	-	-	-	-	-	-	-
				PRE	-	-	-	-	-	-	-

Category, ItemNO, Class	Summary / CompID / System	Scope / Method / Procedure	Iso No. Comp. Desc. Code Case		Period 1 00	Period 1 02	Period 2 03	Period 2 05	Period 2 06	Period 3 08	Period 3 09
SN-FT	I601401		B-10A	ISI	-	-	-	-	-	-	-
FT	MSU-13 (EAST)		MECHANICAL SNUBBER	AUG	-	-	-	-	-	-	-
2	MS			OWN	-	-	-	-	-	-	-
				PRE	-	-	-	-	-	-	-
SN-FT	I601402	AUG/VT/FT	B-10A	ISI	-	-	-	-	-	-	-
FT	MSU-13 (WEST)	AUG/VT/FT	MECHANICAL SNUBBER	AUG	c	-	-	-	-	-	-
2	MS			OWN	-	-	-	-	-	-	-
				PRE	-	-	-	-	-	-	-
SN-FT	I601411		B-10A	ISI	-	-	-	-	-	-	-
FT	MSU-15 (NORTH)		MECHANICAL SNUBBER	AUG	-	-	-	-	s	-	-
2	MS			OWN	-	-	-	-	-	-	-
				PRE	-	-	-	-	-	-	-
SN-FT	I601412		B-10A	ISI	-	-	-	-	-	-	-
FT	MSU-15 (SOUTH)		MECHANICAL SNUBBER	AUG	-	-	-	-	s	-	-
2	MS			OWN	-	-	-	-	-	-	-
				PRE	-	-	-	-	-	-	-
SN-FT	I601421		B-10A	ISI	-	-	-	-	-	-	-
FT	MSU-16 (NORTH)		MECHANICAL SNUBBER	AUG	-	-	-	-	-	s	-
2	MS			OWN	-	-	-	-	-	-	-
				PRE	-	-	-	-	-	-	-
SN-FT	I601422		B-10A	ISI	-	-	-	-	-	-	-
FT	MSU-16 (SOUTH)		MECHANICAL SNUBBER	AUG	-	-	-	-	-	s	-
2	MS			OWN	-	-	-	-	-	-	-
				PRE	-	-	-	-	-	-	-
SN-FT	I601431		B-10A	ISI	-	-	-	-	-	-	-
FT	MSU-18 (NORTH)		MECHANICAL SNUBBER	AUG	-	-	-	-	-	-	s
2	MS			OWN	-	-	-	-	-	-	-
				PRE	-	-	-	-	-	-	-
SN-FT	I601432		B-10A	ISI	-	-	-	-	-	-	-
FT	MSU-18 (SOUTH)		MECHANICAL SNUBBER	AUG	-	-	-	-	-	-	s
2	MS			OWN	-	-	-	-	-	-	-
				PRE	-	-	-	-	-	-	-
SN-FT	I601441		B-10A	ISI	-	-	-	-	-	-	-
FT	MSU-19 (NORTH)		MECHANICAL SNUBBER	AUG	-	-	-	-	-	-	-
2	MS			OWN	-	-	-	-	-	-	-
				PRE	-	-	-	-	-	-	-
SN-FT	I601442		B-10A	ISI	-	-	-	-	-	-	-
FT	MSU-19 (SOUTH)		MECHANICAL SNUBBER	AUG	-	-	-	-	-	-	-
2	MS			OWN	-	-	-	-	-	-	-
				PRE	-	-	-	-	-	-	-

Category, ItemNO, Class	Summary / CompID / System	Scope / Method / Procedure	Iso No. Comp. Desc. Code Case		Period 1 00	Period 1 02	Period 2 03	Period 2 05	Period 2 06	Period 3 08	Period 3 09
SN-FT	I601451		B-10A	ISI	-	-	-	-	-	-	-
FT	MSU-22		MECHANICAL SNUBBER	AUG	-	-	-	-	-	-	-
2	MS			OWN	-	-	-	-	-	-	-
				PRE	-	-	-	-	-	-	-
SN-FT	I601461	AUG/VT/FT	B-10A	ISI	-	-	-	-	-	-	-
FT	MSU-25		MECHANICAL SNUBBER	AUG	-	c	-	-	-	-	-
2	MS			OWN	-	-	-	-	-	-	-
				PRE	-	-	-	-	-	-	-
SN-FT	I601471		B-10A	ISI	-	-	-	-	-	-	-
FT	MSU-26 (TOP)		MECHANICAL SNUBBER	AUG	-	-	-	-	-	s	-
2	MS			OWN	-	-	-	-	-	-	-
				PRE	-	-	-	-	-	-	-
SN-FT	I601472	AUG/VT/FT	B-10A	ISI	-	-	-	-	-	-	-
FT	MSU-26 (BOTTOM)		MECHANICAL SNUBBER	AUG	-	c	-	-	-	b	-
2	MS			OWN	-	-	-	-	-	-	-
				PRE	-	-	-	-	-	-	-
SN-FT	I601481	AUG/VT/FT	B-10A	ISI	-	-	-	-	-	-	-
FT	MSU-27		MECHANICAL SNUBBER	AUG	-	-	-	s	-	-	-
2	MS			OWN	-	-	-	-	-	-	-
				PRE	-	-	-	-	-	-	-
SN-FT	I601491		B-10A	ISI	-	-	-	-	-	-	-
FT	MSU-29		MECHANICAL SNUBBER	AUG	-	-	-	-	-	-	-
2	MS			OWN	-	-	-	-	-	-	-
				PRE	-	-	-	-	-	-	-
SN-FT	I601501		B-10A	ISI	-	-	-	-	-	-	-
FT	MSU-31		MECHANICAL SNUBBER	AUG	-	-	-	-	-	s	-
2	MS			OWN	-	-	-	-	-	-	-
				PRE	-	-	-	-	-	-	-
SN-FT	I601511		B-10	ISI	-	-	-	-	-	-	-
FT	MSU-32		MECHANICAL SNUBBER	AUG	-	-	-	-	-	-	-
2	MS			OWN	-	-	-	-	-	-	-
				PRE	-	-	-	-	-	-	-
SN-FT	I601521	AUG/VT/FT	B-9A	ISI	-	-	-	-	-	-	-
FT	MSU-38		MECHANICAL SNUBBER	AUG	-	-	-	s	-	-	-
2	MS			OWN	-	-	-	-	-	-	-
				PRE	-	-	-	-	-	-	-
SN-FT	I601531		B-9	ISI	-	-	-	-	-	-	-
FT	MSU-39		MECHANICAL SNUBBER	AUG	-	-	-	-	s	-	-
2	MS			OWN	-	-	-	-	-	-	-
				PRE	-	-	-	-	-	-	-

Category, ItemNO, Class	Summary / CompID / System	Scope / Method / Procedure	Iso No. Comp. Desc. Code Case		Period 1 00	Period 1 02	Period 2 03	Period 2 05	Period 2 06	Period 3 08	Period 3 09
SN-FT	I601541		B-9	ISI	-	-	-	-	-	-	-
FT	MSU-40		MECHANICAL SNUBBER	AUG	-	-	-	-	-	s	-
2	MS			OWN	-	-	-	-	-	-	-
				PRE	-	-	-	-	-	-	-
SN-FT	I601551		B-9	ISI	-	-	-	-	-	-	-
FT	MSU-44		MECHANICAL SNUBBER	AUG	-	-	-	-	-	-	s
2	MS			OWN	-	-	-	-	-	-	-
				PRE	-	-	-	-	-	-	-
SN-FT	I601561		B-10	ISI	-	-	-	-	-	-	-
FT	MSU-55		MECHANICAL SNUBBER	AUG	-	-	-	-	s	-	-
2	MS			OWN	-	-	-	-	-	-	-
				PRE	-	-	-	-	-	-	-
SN-FT	I601571	AUG/VT/FT	B-10	ISI	-	-	-	-	-	-	-
FT	MSU-57		MECHANICAL SNUBBER	AUG	-	c	-	-	-	-	b
2	MS			OWN	-	-	-	-	-	-	-
				PRE	-	-	-	-	-	-	-
SN-FT	I601581	AUG/VT/FT	B-9A	ISI	-	-	-	-	-	-	-
FT	MSU-58	AUG/VT/FT	MECHANICAL SNUBBER	AUG	c	B	-	-	b	-	-
2	MS			OWN	-	-	-	-	-	-	-
				PRE	-	-	-	-	-	-	-
SN-FT	I601591	AUG/VT/FT	B-9A	ISI	-	-	-	-	-	-	-
FT	MSU-60		MECHANICAL SNUBBER	AUG	-	-	c	-	-	-	-
4	MS			OWN	-	-	-	-	-	-	-
				PRE	-	-	-	-	-	-	-
SN-FT	I601601		C-32	ISI	-	-	-	-	-	-	-
FT	MSU-72		MECHANICAL SNUBBER	AUG	-	-	-	-	-	-	-
3	MS			OWN	-	-	-	-	-	-	-
				PRE	-	-	-	-	-	-	-
SN-FT	I601611	AUG/VT/FT	C-32	ISI	-	-	-	-	-	-	-
FT	MSU-74		MECHANICAL SNUBBER	AUG	-	-	-	s	-	-	-
3	MS			OWN	-	-	-	-	-	-	-
				PRE	-	-	-	-	-	-	-
SN-FT	I601621		B-10	ISI	-	-	-	-	-	-	-
FT	MSU-75		MECHANICAL SNUBBER	AUG	-	-	-	-	s	-	-
2	MS			OWN	-	-	-	-	-	-	-
				PRE	-	-	-	-	-	-	-
SN-FT	I601631		C-32	ISI	-	-	-	-	-	-	-
FT	MSU-78		MECHANICAL SNUBBER	AUG	-	-	-	-	-	-	s
3	MS			OWN	-	-	-	-	-	-	-
				PRE	-	-	-	-	-	-	-

Category, ItemNO, Class	Summary / CompID / System	Scope / Method / Procedure	Iso No. Comp. Desc. Code Case		Period 1 00	Period 1 02	Period 2 03	Period 2 05	Period 2 06	Period 3 08	Period 3 09
SN-FT	I601641	AUG/VT/FT	C-32	ISI	-	-	-	-	-	-	-
FT	MSU-80		MECHANICAL SNUBBER	AUG	-	-	c	-	-	-	-
3	MS			OWN	-	-	-	-	-	-	-
				PRE	-	-	-	-	-	-	-
SN-FT	I601651	AUG/VT/FT	C-32	ISI	-	-	-	-	-	-	-
FT	MSU-82		MECHANICAL SNUBBER	AUG	-	-	-	s	-	-	-
3	MS			OWN	-	-	-	-	-	-	-
				PRE	-	-	-	-	-	-	-
SN-FT	I601661		C-32	ISI	-	-	-	-	-	-	-
FT	MSU-84 (EAST)		MECHANICAL SNUBBER	AUG	-	-	-	-	-	s	-
3	MS			OWN	-	-	-	-	-	-	-
				PRE	-	-	-	-	-	-	-
SN-FT	I601662		C-32	ISI	-	-	-	-	-	-	-
FT	MSU-84 (WEST)		MECHANICAL SNUBBER	AUG	-	-	-	-	-	s	-
3	MS			OWN	-	-	-	-	-	-	-
				PRE	-	-	-	-	-	-	-
SN-FT	I601671	AUG/VT/FT	B-9A	ISI	-	-	-	-	-	-	-
FT	MSU-85		MECHANICAL SNUBBER	AUG	c	-	-	-	-	-	-
2	MS			OWN	-	-	-	-	-	-	-
				PRE	-	-	-	-	-	-	-
SN-FT	I601681		B-17	ISI	-	-	-	-	-	-	-
FT	RHU-8		MECHANICAL SNUBBER	AUG	-	-	-	-	-	s	-
2	RHR			OWN	-	-	-	-	-	-	-
				PRE	-	-	-	-	-	-	-
SN-FT	I601691		A-15	ISI	-	-	-	-	-	-	-
FT	RHU-30		MECHANICAL SNUBBER	AUG	-	-	-	-	-	-	-
1	RHR			OWN	-	-	-	-	-	-	-
				PRE	-	-	-	-	-	-	-
SN-FT	I601701	AUG/VT/FT	A-15	ISI	-	-	-	-	-	-	-
FT	RHU-33		MECHANICAL SNUBBER	AUG	-	-	c	-	-	-	-
1	RHR			OWN	-	-	-	-	-	-	-
				PRE	-	-	-	-	-	-	-
SN-FT	I601711	AUG/VT/FT	B-23	ISI	-	-	-	-	-	-	-
FT	RHU-36		MECHANICAL SNUBBER	AUG	-	-	-	s	-	-	-
2	RHR			OWN	-	-	-	-	-	-	-
				PRE	-	-	-	-	-	-	-
SN-FT	I601721		B-25	ISI	-	-	-	-	-	-	-
FT	RHU-51		MECHANICAL SNUBBER	AUG	-	-	-	-	s	-	-
2	RHR			OWN	-	-	-	-	-	-	-
				PRE	-	-	-	-	-	-	-

Category, ItemNO, Class	Summary / CompID / System	Scope / Method / Procedure	Iso No. Comp. Desc. Code Case		Period 1 00	Period 1 02	Period 2 03	Period 2 05	Period 2 06	Period 3 08	Period 3 09
SN-FT	I601731		B-25	ISI	-	-	-	-	-	-	-
FT	RHU-53		MECHANICAL SNUBBER	AUG	-	-	-	-	-	s	-
2	RHR			OWN	-	-	-	-	-	-	-
				PRE	-	-	-	-	-	-	-
SN-FT	I601741		B-26	ISI	-	-	-	-	-	-	-
FT	RHU-61		MECHANICAL SNUBBER	AUG	-	-	-	-	-	-	-
2	RHR			OWN	-	-	-	-	-	-	-
				PRE	-	-	-	-	-	-	-
SN-FT	I601751	AUG/VT/FT	B-20	ISI	-	-	-	-	-	-	-
FT	RHU-63 (NORTH)		MECHANICAL SNUBBER	AUG	c	-	-	-	-	-	-
2	RHR			OWN	-	-	-	-	-	-	-
				PRE	-	-	-	-	-	-	-
SN-FT	I601752	AUG/VT/FT	B-20	ISI	-	-	-	-	-	-	-
FT	RHU-63 (SOUTH)		MECHANICAL SNUBBER	AUG	c	-	-	-	-	-	-
2	RHR			OWN	-	-	-	-	-	-	-
				PRE	-	-	-	-	-	-	-
SN-FT	I601761	AUG/VT/FT	B-20A	ISI	-	-	-	-	-	-	-
FT	RHU-69		MECHANICAL SNUBBER	AUG	-	c	-	-	-	-	-
2	RHR			OWN	-	-	-	-	-	-	-
				PRE	-	-	-	-	-	-	-
SN-FT	I601771	AUG/VT/FT	B-20A	ISI	-	-	-	-	-	-	-
FT	RHU-71 (NORTH)		MECHANICAL SNUBBER	AUG	-	-	c	-	-	-	-
2	RHR			OWN	-	-	-	-	-	-	-
				PRE	-	-	-	-	-	-	-
SN-FT	I601772	AUG/VT/FT	B-20A	ISI	-	-	-	-	-	-	-
FT	RHU-71 (SOUTH)		MECHANICAL SNUBBER	AUG	-	-	c	-	-	-	-
2	RHR			OWN	-	-	-	-	-	-	-
				PRE	-	-	-	-	-	-	-
SN-FT	I601781		B-20A	ISI	-	-	-	-	-	-	-
FT	RHU-72		MECHANICAL SNUBBER	AUG	-	-	-	-	s	-	-
2	RHR			OWN	-	-	-	-	-	-	-
				PRE	-	-	-	-	-	-	-
SN-FT	I601791		B-20	ISI	-	-	-	-	-	-	-
FT	RHU-75		MECHANICAL SNUBBER	AUG	-	-	-	-	-	-	-
2	RHR			OWN	-	-	-	-	-	-	-
				PRE	-	-	-	-	-	-	-
SN-FT	I601801	AUG/VT/FT	B-21	ISI	-	-	-	-	-	-	-
FT	RHU-92	AUG/VT/FT	MECHANICAL SNUBBER	AUG	c	B	-	-	-	-	-
2	RHR			OWN	-	-	-	-	-	-	-
				PRE	-	-	-	-	-	-	-

Category, ItemNO, Class	Summary / CompID / System	Scope / Method / Procedure	Iso No. Comp. Desc. Code Case		Period 1 00	Period 1 02	Period 2 03	Period 2 05	Period 2 06	Period 3 08	Period 3 09
SN-FT	I601811		B-19	ISI	-	-	-	-	-	-	-
FT	RHU-109		MECHANICAL SNUBBER	AUG	-	-	-	-	-	-	-
2	HPSI			OWN	-	-	-	-	-	-	-
				PRE	-	-	-	-	-	-	-
SN-FT	I601821		B-19	ISI	-	-	-	-	-	-	-
FT	RHU-110		MECHANICAL SNUBBER	AUG	-	-	-	-	-	-	-
2	HPSI			OWN	-	-	-	-	-	-	-
				PRE	-	-	-	-	-	-	-
SN-FT	I601831		B-16B	ISI	-	-	-	-	-	-	-
FT	RHU-119		MECHANICAL SNUBBER	AUG	-	-	-	-	-	s	-
2	HPSI			OWN	-	-	-	-	-	-	-
				PRE	-	-	-	-	-	-	-
SN-FT	I601841		B-19	ISI	-	-	-	-	-	-	-
FT	RHU-123		MECHANICAL SNUBBER	AUG	-	-	-	-	-	-	-
2	HPSI			OWN	-	-	-	-	-	-	-
				PRE	-	-	-	-	-	-	-
SN-FT	I601851		A-17	ISI	-	-	-	-	-	-	-
FT	SIU-3		MECHANICAL SNUBBER	AUG	-	-	-	-	-	-	-
1	HPSI			OWN	-	-	-	-	-	-	-
				PRE	-	-	-	-	-	-	-
SN-FT	I601861		A-16	ISI	-	-	-	-	-	-	-
FT	SIU-47		MECHANICAL SNUBBER	AUG	-	-	-	-	-	-	s
1	HPSI			OWN	-	-	-	-	-	-	-
				PRE	-	-	-	-	-	-	-
SN-FT	I601871	AUG/VT/FT	A-14	ISI	-	-	-	-	-	-	-
FT	SIU-52		MECHANICAL SNUBBER	AUG	-	-	-	s	-	-	-
1	RHR			OWN	-	-	-	-	-	-	-
				PRE	-	-	-	-	-	-	-
SN-FT	I601891	AUG/VT/FT	C-13	ISI	-	-	-	-	-	-	-
FT	SWU-254		MECHANICAL SNUBBER	AUG	-	c	-	-	-	-	-
3	SW			OWN	-	-	-	-	-	-	-
				PRE	-	-	-	-	-	-	-
SN-FT	I601901	AUG/VT/FT	B-50A	ISI	-	-	-	-	-	-	-
FT	SWU-308		MECHANICAL SNUBBER	AUG	-	-	c	-	-	-	-
2	SW			OWN	-	-	-	-	-	-	-
				PRE	-	-	-	-	-	-	-
SN-FT	I601911	AUG/VT/FT	B-50A	ISI	-	-	-	-	-	-	-
FT	SWU-309		MECHANICAL SNUBBER	AUG	-	-	-	s	-	-	-
2	SW			OWN	-	-	-	-	-	-	-
				PRE	-	-	-	-	-	-	-

Category, ItemNO, Class	Summary / CompID / System	Scope / Method / Procedure	Iso No. Comp. Desc. Code Case		Period 1 00	Period 1 02	Period 2 03	Period 2 05	Period 2 06	Period 3 08	Period 3 09
SN-FT	I601921		C-16B	ISI	-	-	-	-	-	-	-
FT	SWU-370		MECHANICAL SNUBBER	AUG	-	-	-	-	s	-	-
3	SW			OWN	-	-	-	-	-	-	-
				PRE	-	-	-	-	-	-	-
SN-FT	I601931	AUG/VT/FT	C-24	ISI	-	-	-	-	-	-	-
FT	AFU-205 (AFW-10)	OWN/VT/FT	HYDRAULIC SNUBBER	AUG	-	c	-	-	-	-	b
2	SAFW	AUG//		OWN	c	-	-	-	-	-	-
				PRE	-	-	-	-	-	-	-
SN-FT	I601941	AUG/VT/FT	C-24	ISI	-	-	-	-	-	-	-
FT	AFU-208 (AFW-13)	AUG/VT/FT	HYDRAULIC SNUBBER	AUG	-	E	c	-	-	-	-
2	SAFW			OWN	-	-	-	-	-	-	-
				PRE	-	-	-	-	-	-	-
SN-FT	I601971	AUG/VT/FT	C-20	ISI	-	-	-	-	-	-	-
FT	AFU-224 (AFW-28)	AUG/VT/FT	HYDRAULIC SNUBBER	AUG	-	E	c	-	-	-	-
2	SAFW			OWN	-	-	-	-	-	-	-
				PRE	-	-	-	-	-	-	-
SN-FT	I601981	AUG/VT/FT	C-20	ISI	-	-	-	-	-	-	-
FT	AFU-226 (AFW-27)	AUG//	HYDRAULIC SNUBBER	AUG	-	E	c	-	b	-	-
2	SAFW	AUG/VT/FT	Snubber FT Prog.	OWN	-	-	-	-	-	-	-
				PRE	-	-	-	-	-	-	-
SN-FT	I601991	AUG/VT/FT	C-20	ISI	-	-	-	-	-	-	-
FT	AFU-225 (AFW-29)	AUG//	HYDRAULIC SNUBBER	AUG	-	E	c	-	-	b	-
2	SAFW	AUG/VT/FT	Snubber FT Prog.	OWN	-	-	-	-	-	-	-
				PRE	-	-	-	-	-	-	-
SN-FT	I602001		C-20	ISI	-	-	-	-	-	-	-
FT	AFU-227 (AFW-31)		MECHANICAL SNUBBER	AUG	-	-	-	-	-	-	-
2	SAFW			OWN	-	-	-	-	-	-	-
				PRE	-	-	-	-	-	-	-
SN-FT	I602011	AUG/VT/FT	S-2	ISI	-	-	-	-	-	-	-
FT	N601		HYDRAULIC SNUBBER	AUG	-	-	c	-	-	-	-
Q	PZR			OWN	-	-	-	-	-	-	-
				PRE	-	-	-	-	-	-	-
SN-FT	I602021	AUG/VT/FT	S-2	ISI	-	-	-	-	-	-	-
FT	N602		HYDRAULIC SNUBBER	AUG	c	-	-	-	-	-	-
Q	PZR			OWN	-	-	-	-	-	-	-
				PRE	-	-	-	-	-	-	-
SN-FT	I602031		S-2	ISI	-	-	-	-	-	-	-
FT	N604		HYDRAULIC SNUBBER	AUG	-	-	-	-	-	-	-
Q	PZR			OWN	-	-	-	-	-	-	-
				PRE	-	-	-	-	-	-	-

Category, ItemNO, Class	Summary / CompID / System	Scope / Method / Procedure	Iso No. Comp. Desc. Code Case		Period 1 00	Period 1 02	Period 2 03	Period 2 05	Period 2 06	Period 3 08	Period 3 09
SN-FT	I602041	AUG/VT/FT	S-2	ISI	-	-	-	-	-	-	-
FT	N605		HYDRAULIC SNUBBER	AUG	-	c	-	-	-	-	-
Q	PZR			OWN	-	-	-	-	-	-	-
				PRE	-	-	-	-	-	-	-
SN-FT	I602051		S-2	ISI	-	-	-	-	-	-	-
FT	N607		HYDRAULIC SNUBBER	AUG	-	-	-	-	s	-	-
Q	PZR			OWN	-	-	-	-	-	-	-
				PRE	-	-	-	-	-	-	-
SN-FT	I602061	AUG/VT/FT	S-2	ISI	-	-	-	-	-	-	-
FT	N608		HYDRAULIC SNUBBER	AUG	-	-	-	s	-	-	-
Q	PZR			OWN	-	-	-	-	-	-	-
				PRE	-	-	-	-	-	-	-
SN-FT	I602071		S-2	ISI	-	-	-	-	-	-	-
FT	N615		HYDRAULIC SNUBBER	AUG	-	-	-	-	-	-	-
Q	PZR			OWN	-	-	-	-	-	-	-
				PRE	-	-	-	-	-	-	-
SN-FT	I602081	AUG/VT/FT	S-2	ISI	-	-	-	-	-	-	-
FT	N616		HYDRAULIC SNUBBER	AUG	-	-	-	-	-	-	s
Q	PZR			OWN	-	-	-	-	-	-	-
				PRE	-	-	-	-	-	-	-
SN-FT	I602091	OWN/VT/FT	S-1	ISI	-	-	-	-	-	-	-
FT	PS-2	AUG/VT/FT	HYDRAULIC SNUBBER	AUG	-	-	c	b	-	-	-
Q	PZR	AUG/VT/FT		OWN	-	c	-	-	-	-	-
				PRE	-	-	-	-	-	-	-
SN-FT	I602101		S-1	ISI	-	-	-	-	-	-	-
FT	PS-4		HYDRAULIC SNUBBER	AUG	-	-	-	-	s	-	-
Q	PZR			OWN	-	-	-	-	-	-	-
				PRE	-	-	-	-	-	-	-
SN-FT	I602111	OWN/VT/FT	A-12	ISI	-	-	-	-	-	-	-
FT	PS-5		HYDRAULIC SNUBBER	AUG	-	-	-	-	-	-	-
1	PZR			OWN	-	c	-	-	-	-	-
				PRE	-	-	-	-	-	-	-
SN-FT	I602121		A-12	ISI	-	-	-	-	-	-	-
FT	PS-6		HYDRAULIC SNUBBER	AUG	-	-	-	-	-	-	-
1	PZR			OWN	-	-	-	-	-	-	-
				PRE	-	-	-	-	-	-	-
SN-FT	I602131		A-12	ISI	-	-	-	-	-	-	-
FT	PS-8		HYDRAULIC SNUBBER	AUG	-	-	-	-	-	s	-
1	PZR			OWN	-	-	-	-	-	-	-
				PRE	-	-	-	-	-	-	-

Category, ItemNO, Class	Summary / CompID / System	Scope / Method / Procedure	Iso No. Comp. Desc. Code Case		Period 1 00	Period 1 02	Period 2 03	Period 2 05	Period 2 06	Period 3 08	Period 3 09
SN-FT	I602141	AUG/VT/FT	S-1A	ISI	-	-	-	-	-	-	-
FT	PS-9		HYDRAULIC SNUBBER	AUG	-	-	c	-	-	-	-
Q	PZR			OWN	-	-	-	-	-	-	-
				PRE	-	-	-	-	-	-	-
SN-FT	I602151	AUG/VT/FT	S-1A	ISI	-	-	-	-	-	-	-
FT	PS-10		HYDRAULIC SNUBBER	AUG	-	c	-	-	-	-	-
Q	PZR			OWN	-	-	-	-	-	-	-
				PRE	-	-	-	-	-	-	-
SN-FT	I602161		S-1A	ISI	-	-	-	-	-	-	-
FT	PS-11		HYDRAULIC SNUBBER	AUG	-	-	-	-	-	-	-
Q	PZR			OWN	-	-	-	-	-	-	-
				PRE	-	-	-	-	-	-	-
SN-FT	I602201		S-3	ISI	-	-	-	-	-	-	-
FT	CVU-131		MECHANICAL SNUBBER	AUG	-	-	-	-	-	-	-
2	CVCS-CHRG			OWN	-	-	-	-	-	-	-
				PRE	-	-	-	-	-	-	-
SN-FT	I602301		S-3	ISI	-	-	-	-	-	-	-
FT	CVU-550		MECHANICAL SNUBBER	AUG	-	-	-	-	-	-	-
2	CVCS-CHRG			OWN	-	-	-	-	-	-	-
				PRE	-	-	-	-	-	-	-
SN-FT	I602401	AUG/VT/FT	C-24	ISI	-	-	-	-	-	-	-
FT	AFU-209	AUG/VT/FT	HYDRAULIC SNUBBER	AUG	-	E	c	-	-	-	-
2	SAFW			OWN	-	-	-	-	-	-	-
				PRE	-	-	-	-	-	-	-
SN-FT	I602501	AUG/VT/FT	C-20	ISI	-	-	-	-	-	-	-
FT	AFU-229	AUG/VT/FT	HYDRAULIC SNUBBER	AUG	-	E	c	-	-	-	-
2	SAFW			OWN	-	-	-	-	-	-	-
				PRE	-	-	-	-	-	-	-
SN-VT	I600080	AUG/VT/VT-107	A-7F	ISI	-	-	-	-	-	-	-
VT	SGA-7	AUG/VT/VT-107	HYDRAULIC SNUBBER	AUG	-	c	B	b	b	-	b
1	SG	PSI/VT/VT-106		OWN	-	-	-	-	-	-	-
		AUG//		PRE	-	-	-	s	-	-	b
SN-VT	I600090	AUG/VT/VT-107	A-7F	ISI	-	-	-	-	-	-	-
VT	SGA-8	PSI/VT/VT-106	HYDRAULIC SNUBBER	AUG	-	c	B	-	b	b	b
1	SG	AUG/VT/VT-107		OWN	-	-	-	-	-	-	-
		AUG//		PRE	-	c	-	-	-	b	-
SN-VT	I600120	AUG/VT/VT-107	A-7F	ISI	-	-	-	-	-	-	-
VT	SGB-3	AUG/VT/VT-107	HYDRAULIC SNUBBER	AUG	c	B	B	-	b	-	b
1	SG	AUG/VT/VT-107		OWN	-	-	-	-	-	-	-
		PSI/VT/VT-106		PRE	c	-	-	-	b	-	b

Category, ItemNO, Class	Summary / CompID / System	Scope / Method / Procedure	Iso No. Comp. Desc. Code Case		Period 1 00	Period 1 02	Period 2 03	Period 2 05	Period 2 06	Period 3 08	Period 3 09
SN-VT	I600130	AUG/VT/VT-107	A-7F	ISI	-	-	-	-	-	-	-
VT	SGB-4	AUG/VT/VT-107	HYDRAULIC SNUBBER	AUG	-	c	B	-	b	-	b
1	SG	PSI/VT/VT-106		OWN	-	-	-	-	-	-	-
		AUG//		PRE	-	-	c	-	-	-	b
SN-VT	I600200	AUG/VT/VT-107	C-16	ISI	-	-	-	-	-	-	-
VT	AFU-3	AUG/VT/VT-107	MECHANICAL SNUBBER	AUG	-	c	B	-	b	-	b
3	AFW	AUG//		OWN	-	-	-	-	-	-	-
		AUG//		PRE	-	-	-	-	-	-	-
SN-VT	I600220	AUG/VT/VT-107	C-1E	ISI	-	-	-	-	-	-	-
VT	AFU-31	PSI/VT/VT-106	MECHANICAL SNUBBER	AUG	-	c	B	-	b	-	b
3	AFW	AUG/VT/VT-107		OWN	-	-	-	-	-	-	-
		AUG//		PRE	-	c	-	-	-	-	-
SN-VT	I600240	AUG/VT/VT-107	C-1E	ISI	-	-	-	-	-	-	-
VT	AFU-34	AUG/VT/VT-107	MECHANICAL SNUBBER	AUG	-	c	B	-	b	-	b
3	AFW	AUG//		OWN	-	-	-	-	-	-	-
				PRE	-	-	-	-	-	-	s
SN-VT	I600260	AUG/VT/VT-107	C-1A	ISI	-	-	-	-	-	-	-
VT	AFU-52	AUG/VT/VT-107	MECHANICAL SNUBBER	AUG	-	c	B	b	b	-	b
3	AFW	AUG//		OWN	-	-	-	-	-	-	-
		AUG//		PRE	-	-	-	s	-	-	-
SN-VT	I600280	AUG/VT/VT-107	C-1B	ISI	-	-	-	-	-	-	-
VT	AFU-75	AUG/VT/VT-107	MECHANICAL SNUBBER	AUG	-	c	B	-	b	-	b
3	AFW	AUG//		OWN	-	-	-	-	-	-	-
				PRE	-	-	-	-	-	-	s
SN-VT	I600300	AUG/VT/VT-107	C-1B	ISI	-	-	-	-	-	-	-
VT	AFU-98	AUG/VT/VT-107	MECHANICAL SNUBBER	AUG	-	c	B	-	b	-	b
2	AFW	AUG//		OWN	-	-	-	-	-	-	-
		AUG//		PRE	-	-	-	-	-	-	-
SN-VT	I600320	AUG/VT/VT-107	C-1C	ISI	-	-	-	-	-	-	-
VT	AFU-101	AUG/VT/VT-107	MECHANICAL SNUBBER	AUG	-	c	B	-	b	-	b
3	AFW	AUG//		OWN	-	-	-	-	-	-	-
		AUG//		PRE	-	-	-	-	-	-	-
SN-VT	I600339	AUG/VT/VT-107	C-1C	ISI	-	-	-	-	-	-	-
VT	AFU-103 (EAST)	AUG/VT/VT-107	MECHANICAL SNUBBER	AUG	c	B	B	-	b	-	b
3	AFW	AUG/VT/VT-107		OWN	-	-	-	-	-	-	-
		PSI/VT/VT-106		PRE	c	-	-	-	-	-	-
SN-VT	I600340	AUG/VT/VT-107	C-1C	ISI	-	-	-	-	-	-	-
VT	AFU-103 (WEST)	AUG/VT/VT-107	MECHANICAL SNUBBER	AUG	c	B	B	-	b	-	b
3	AFW	AUG/VT/VT-107		OWN	-	-	-	-	-	-	-
		PSI/VT/VT-106		PRE	c	-	-	-	-	-	-

Category, ItemNO, Class	Summary / CompID / System	Scope / Method / Procedure	Iso No. Comp. Desc. Code Case		Period 1 00	Period 1 02	Period 2 03	Period 2 05	Period 2 06	Period 3 08	Period 3 09
SN-VT	I600360	AUG/VT/VT-107	C-1A	ISI	-	-	-	-	-	-	-
VT	AFU-109	PSI/VT/VT-106	HYDRAULIC SNUBBER	AUG	c	B	B	-	b	-	b
2	AFW	AUG/VT/VT-107		OWN	-	-	-	-	-	-	-
		PSI/VT/VT-106		PRE	c	B	B	-	b	-	-
SN-VT	I600380	AUG/VT/VT-107	C-1A	ISI	-	-	-	-	-	-	-
VT	AFU-111	PSI/VT/VT-106	MECHANICAL SNUBBER	AUG	c	B	B	-	b	-	b
2	AFW	AUG/VT/VT-107		OWN	-	-	-	-	-	-	-
		AUG/VT/VT-107		PRE	c	B	-	h	-	-	-
SN-VT	I600400	AUG/VT/VT-107	C-1A	ISI	-	-	-	-	-	-	-
VT	AFU-123	AUG/VT/VT-107	MECHANICAL SNUBBER	AUG	-	c	B	-	b	-	b
2	AFW	AUG//		OWN	-	-	-	-	-	-	-
		PSI/VT/VT-106		PRE	-	-	-	-	-	-	s
SN-VT	I600420	AUG/VT/VT-107	C-1A	ISI	-	-	-	-	-	-	-
VT	AFU-124	AUG/VT/VT-107	MECHANICAL SNUBBER	AUG	-	c	B	-	b	-	b
2	AFW	PSI/VT/VT-106		OWN	-	-	-	-	-	-	-
		AUG//		PRE	-	-	c	-	-	-	-
SN-VT	I600460	AUG/VT/VT-107	B-31	ISI	-	-	-	-	-	-	-
VT	BDU-16	AUG/VT/VT-107	MECHANICAL SNUBBER	AUG	-	c	B	-	b	-	b
2	SG	AUG//		OWN	-	-	-	-	-	-	-
				PRE	-	-	-	-	-	-	s
SN-VT	I600530	AUG/VT/VT-107	B-29	ISI	-	-	-	-	-	-	-
VT	CCU-43	AUG/VT/VT-107	MECHANICAL SNUBBER	AUG	-	c	B	-	b	-	b
2	AC	AUG//		OWN	-	-	-	-	-	-	-
		AUG//		PRE	-	-	-	-	-	-	-
SN-VT	I600610	AUG/VT/VT-107	C-34	ISI	-	-	-	-	-	-	-
VT	CCU-57	PSI/VT/VT-106	MECHANICAL SNUBBER	AUG	-	c	B	-	b	-	b
2	AC	AUG/VT/VT-107		OWN	-	-	-	-	-	-	-
		AUG//		PRE	-	-	-	-	s	-	-
SN-VT	I600710	AUG/VT/VT-107	B-30	ISI	-	-	-	-	-	-	-
VT	CCU-71	AUG/VT/VT-107	MECHANICAL SNUBBER	AUG	-	c	B	-	b	-	b
2	AC	PSI/VT/VT-106		OWN	-	-	-	-	-	-	-
		AUG//		PRE	-	-	c	-	-	-	-
SN-VT	I600880	AUG/VT/VT-107	A-23	ISI	-	-	-	-	-	-	-
VT	CVU-26	AUG/VT/VT-107	MECHANICAL SNUBBER	AUG	-	c	B	-	b	b	b
1	CVCS-LTDN	AUG//		OWN	-	-	-	-	-	-	-
		AUG//		PRE	-	-	-	-	-	s	-
SN-VT	I600900	AUG/VT/VT-107	A-30	ISI	-	-	-	-	-	-	-
VT	CVU-46	AUG/VT/VT-107	MECHANICAL SNUBBER	AUG	-	c	B	-	b	-	b
2	CVCS-CHRG	AUG//		OWN	-	-	-	-	-	-	-
				PRE	-	-	-	-	s	-	-

Category, ItemNO, Class	Summary / CompID / System	Scope / Method / Procedure	Iso No. Comp. Desc. Code Case		Period 1 00	Period 1 02	Period 2 03	Period 2 05	Period 2 06	Period 3 08	Period 3 09
SN-VT	I600920	AUG/VT/VT-107	A-27	ISI	-	-	-	-	-	-	-
VT	CVU-49	AUG/VT/VT-107	MECHANICAL SNUBBER	AUG	c	B	B	-	b	-	b
2	CVCS-CHRG	AUG/VT/VT-107		OWN	-	-	-	-	-	-	-
		PSI/VT/VT-106		PRE	c	-	-	-	-	-	-
SN-VT	I600940	AUG/VT/VT-107	B-32	ISI	-	-	-	-	-	-	-
VT	CVU-80	AUG/VT/VT-107	MECHANICAL SNUBBER	AUG	-	c	B	-	b	-	b
2	CVCS-LTDN	AUG//		OWN	-	-	-	-	-	-	-
				PRE	-	-	-	-	s	-	-
SN-VT	I600960	AUG/VT/VT-107	A-32	ISI	-	-	-	-	-	-	-
VT	CVU-103	AUG/VT/VT-107	MECHANICAL SNUBBER	AUG	c	B	B	-	b	-	b
1	CVCS-CHRG	AUG/VT/VT-107		OWN	-	-	-	-	-	-	-
		PSI/VT/VT-106		PRE	c	-	-	-	-	-	-
SN-VT	I600980	AUG/VT/VT-107	A-32	ISI	-	-	-	-	-	-	-
VT	CVU-104	PSI/VT/VT-106	MECHANICAL SNUBBER	AUG	-	c	B	-	b	-	b
1	CVCS-CHRG	AUG/VT/VT-107		OWN	-	-	-	-	-	-	-
		AUG//		PRE	-	c	-	-	-	-	-
SN-VT	I601000	AUG/VT/VT-107	B-34	ISI	-	-	-	-	-	-	-
VT	CVU-186	PSI/VT/VT-106	MECHANICAL SNUBBER	AUG	-	c	B	-	b	-	b
2	CVCS-CHRG	AUG/VT/VT-107		OWN	-	-	-	-	-	-	-
		AUG//		PRE	-	-	-	-	-	-	-
SN-VT	I601040	AUG/VT/VT-107	B-35	ISI	-	-	-	-	-	-	-
VT	CVU-345	PSI/VT/VT-106	MECHANICAL SNUBBER	AUG	-	c	B	-	b	-	b
Q	CVCS-LTDN	AUG/VT/VT-107		OWN	-	-	-	-	-	-	-
		PSI/VT/VT-106		PRE	-	c	B	-	-	-	-
SN-VT	I601060	AUG/VT/VT-107	B-35	ISI	-	-	-	-	-	-	-
VT	CVU-351	PSI/VT/VT-106	MECHANICAL SNUBBER	AUG	-	c	B	b	b	-	b
Q	CVCS-LTDN	AUG/VT/VT-107		OWN	-	-	-	-	-	-	-
		AUG//		PRE	-	c	-	b	-	-	-
SN-VT	I601080	AUG/VT/VT-107	B-36	ISI	-	-	-	-	-	-	-
VT	CVU-372	AUG/VT/VT-107	MECHANICAL SNUBBER	AUG	-	c	B	-	b	-	b
Q	CVCS-LTDN	AUG//		OWN	-	-	-	-	-	-	-
				PRE	-	-	-	-	-	-	s
SN-VT	I601100	AUG/VT/VT-107	B-12	ISI	-	-	-	-	-	-	-
VT	FWU-3	AUG/VT/VT-107	HYDRAULIC SNUBBER	AUG	c	B	B	b	b	-	b
2	FW	AUG/VT/VT-107		OWN	-	-	-	-	-	-	-
		PSI/VT/VT-106		PRE	c	-	-	b	-	-	-
SN-VT	I601110	AUG/VT/VT-107	B-12	ISI	-	-	-	-	-	-	-
VT	FWU-5	AUG/VT/VT-107	HYDRAULIC SNUBBER	AUG	c	B	B	-	b	b	b
2	FW	AUG/VT/VT-107		OWN	-	-	-	-	-	-	-
		PSI/VT/VT-106		PRE	c	-	-	-	-	b	-

Category, ItemNO, Class	Summary / CompID / System	Scope / Method / Procedure	Iso No. Comp. Desc. Code Case		Period 1 00	Period 1 02	Period 2 03	Period 2 05	Period 2 06	Period 3 08	Period 3 09
SN-VT	I601120	AUG/VT/VT-107	B-13	ISI	-	-	-	-	-	-	-
VT	FWU-8	PSI/VT/VT-106	MECHANICAL SNUBBER	AUG	-	c	B	-	b	-	b
2	FW	AUG/VT/VT-107		OWN	-	-	-	-	-	-	-
		AUG//		PRE	-	c	-	-	-	-	-
SN-VT	I601130	AUG/VT/VT-107	B-13	ISI	-	-	-	-	-	-	-
VT	FWU-12	AUG/VT/VT-107	MECHANICAL SNUBBER	AUG	-	c	B	-	b	-	b
2	FW	PSI/VT/VT-106		OWN	-	-	-	-	-	-	-
		AUG//		PRE	-	-	c	-	-	-	-
SN-VT	I601140	AUG/VT/VT-107	B-11	ISI	-	-	-	-	-	-	-
VT	FWU-15	AUG/VT/VT-107	MECHANICAL SNUBBER	AUG	-	c	B	-	b	-	b
2	FW	AUG//		OWN	-	-	-	-	-	-	-
		AUG//		PRE	-	-	-	-	-	-	-
SN-VT	I601150	AUG/VT/VT-107	B-11	ISI	-	-	-	-	-	-	-
VT	FWU-17	AUG/VT/VT-107	MECHANICAL SNUBBER	AUG	c	B	B	-	b	-	b
Q	FW	PSI/VT/VT-106		OWN	-	-	-	-	-	-	-
		AUG//		PRE	c	-	-	-	-	-	-
SN-VT	I601160	AUG/VT/VT-107	B-11	ISI	-	-	-	-	-	-	-
VT	FWU-18	AUG/VT/VT-107	MECHANICAL SNUBBER	AUG	-	c	B	-	b	-	b
Q	FW	AUG//		OWN	-	-	-	-	-	-	-
		AUG//		PRE	-	-	-	-	-	-	-
SN-VT	I601170	AUG/VT/VT-107	HE-5	ISI	-	-	-	-	-	-	-
VT	FWU-20	PSI/VT/VT-106	MECHANICAL SNUBBER	AUG	-	c	B	-	b	-	b
Q	FW	AUG/VT/VT-107		OWN	-	-	-	-	-	-	-
		AUG//		PRE	-	c	-	-	-	-	-
SN-VT	I601180	AUG/VT/VT-107	HE-5	ISI	-	-	-	-	-	-	-
VT	FWU-21	AUG/VT/VT-107	HYDRAULIC SNUBBER	AUG	c	B	B	-	b	-	b
Q	FW	AUG/VT/VT-107		OWN	-	-	-	-	-	-	-
		PSI/VT/VT-106		PRE	c	-	B	-	-	-	-
SN-VT	I601190	AUG/VT/VT-107	HE-5	ISI	-	-	-	-	-	-	-
VT	FWU-23	AUG/VT/VT-107	MECHANICAL SNUBBER	AUG	-	c	B	-	b	-	b
Q	FW	AUG//		OWN	-	-	-	-	-	-	-
		AUG//		PRE	-	-	-	-	-	-	-
SN-VT	I601200	AUG/VT/VT-107	HE-5	ISI	-	-	-	-	-	-	-
VT	FWU-24	AUG/VT/VT-107	MECHANICAL SNUBBER	AUG	-	c	B	-	b	-	b
Q	FW	AUG//		OWN	-	-	-	-	-	-	-
		AUG//		PRE	-	-	-	-	-	-	-
SN-VT	I601209	AUG/VT/VT-107	HE-5	ISI	-	-	-	-	-	-	-
VT	FWU-26 (EAST)	AUG/VT/VT-107	MECHANICAL SNUBBER	AUG	-	c	B	-	b	-	b
Q	FW	AUG//		OWN	-	-	-	-	-	-	-
		AUG//		PRE	-	-	-	-	-	-	-

Category, ItemNO, Class	Summary / CompID / System	Scope / Method / Procedure	Iso No. Comp. Desc. Code Case		Period 1 00	Period 1 02	Period 2 03	Period 2 05	Period 2 06	Period 3 08	Period 3 09
SN-VT	I601210	AUG/VT/VT-107	HE-5	ISI	-	-	-	-	-	-	-
VT	FWU-26 (WEST)	AUG/VT/VT-107	MECHANICAL SNUBBER	AUG	-	c	B	-	b	-	b
Q	FW	AUG//		OWN	-	-	-	-	-	-	-
		AUG//		PRE	-	-	-	-	-	-	-
SN-VT	I601220	AUG/VT/VT-107	HE-5	ISI	-	-	-	-	-	-	-
VT	FWU-32	AUG/VT/VT-107	MECHANICAL SNUBBER	AUG	-	c	B	-	b	-	b
Q	FW	AUG//		OWN	-	-	-	-	-	-	-
		AUG//		PRE	-	-	-	-	-	-	-
SN-VT	I601230	AUG/VT/VT-107	B-14	ISI	-	-	-	-	-	-	-
VT	FWU-38	AUG/VT/VT-107	MECHANICAL SNUBBER	AUG	-	c	B	-	b	-	b
Q	FW	AUG//		OWN	-	-	-	-	-	-	-
		AUG//		PRE	-	-	-	-	-	-	-
SN-VT	I601240	AUG/VT/VT-107	B-14	ISI	-	-	-	-	-	-	-
VT	FWU-39	AUG/VT/VT-107	MECHANICAL SNUBBER	AUG	-	c	B	-	b	-	b
Q	FW	AUG//		OWN	-	-	-	-	-	-	-
		AUG//		PRE	-	-	-	-	-	-	-
SN-VT	I601250	AUG/VT/VT-107	B-14	ISI	-	-	-	-	-	-	-
VT	FWU-40	AUG/VT/VT-107	MECHANICAL SNUBBER	AUG	-	c	B	-	b	-	b
Q	FW	AUG//		OWN	-	-	-	-	-	-	-
		AUG//		PRE	-	-	-	-	-	-	-
SN-VT	I601260	AUG/VT/VT-107	B-14	ISI	-	-	-	-	-	-	-
VT	FWU-42	AUG/VT/VT-107	MECHANICAL SNUBBER	AUG	-	c	B	-	b	-	b
2	FW	AUG//		OWN	-	-	-	-	-	-	-
		AUG//		PRE	-	-	-	-	-	-	-
SN-VT	I601270	AUG/VT/VT-107	B-14	ISI	-	-	-	-	-	-	-
VT	FWU-44	PSI/VT/VT-106	HYDRAULIC SNUBBER	AUG	c	B	B	-	b	-	b
2	FW	AUG/VT/VT-107		OWN	-	-	-	-	-	-	-
		AUG/VT/VT-107		PRE	c	B	-	-	-	-	b
SN-VT	I601280	AUG/VT/VT-107	B-14	ISI	-	-	-	-	-	-	-
VT	FWU-47	AUG/VT/VT-107	MECHANICAL SNUBBER	AUG	-	c	B	-	b	-	b
2	FW	AUG//		OWN	-	-	-	-	-	-	-
		AUG//		PRE	-	-	-	-	-	-	-
SN-VT	I601290	AUG/VT/VT-107	B-14	ISI	-	-	-	-	-	-	-
VT	FWU-48	PSI/VT/VT-106	MECHANICAL SNUBBER	AUG	-	c	B	-	b	-	b
2	FW	AUG/VT/VT-107		OWN	-	-	-	-	-	-	-
		AUG//		PRE	-	c	-	-	-	-	-
SN-VT	I601300	AUG/VT/VT-107	B-14	ISI	-	-	-	-	-	-	-
VT	FWU-51	PSI/VT/VT-106	MECHANICAL SNUBBER	AUG	-	c	B	-	b	-	b
2	FW	AUG/VT/VT-107		OWN	-	-	-	-	-	-	-
		AUG//		PRE	-	c	-	-	-	-	-

Category, ItemNO, Class	Summary / CompID / System	Scope / Method / Procedure	Iso No. Comp. Desc. Code Case		Period 1 00	Period 1 02	Period 2 03	Period 2 05	Period 2 06	Period 3 08	Period 3 09
SN-VT	I601310	AUG/VT/VT-107	B-14	ISI	-	-	-	-	-	-	-
VT	FWU-52	AUG/VT/VT-107	MECHANICAL SNUBBER	AUG	-	c	B	-	b	-	b
2	FW	PSI/VT/VT-106		OWN	-	-	-	-	-	-	-
		AUG//		PRE	-	-	c	-	-	-	-
SN-VT	I601320	AUG/VT/VT-107	B-14	ISI	-	-	-	-	-	-	-
VT	FWU-54	AUG/VT/VT-107	MECHANICAL SNUBBER	AUG	-	c	B	b	b	-	b
2	FW	AUG/VT/VT-107		OWN	-	-	-	-	-	-	-
		AUG/VT/VT-107		PRE	-	-	-	s	-	-	-
SN-VT	I601330	AUG/VT/VT-107	B-14	ISI	-	-	-	-	-	-	-
VT	FWU-57	AUG/VT/VT-107	MECHANICAL SNUBBER	AUG	-	c	B	-	b	-	b
2	FW	PSI/VT/VT-106		OWN	-	-	-	-	-	-	-
		AUG//		PRE	-	-	c	-	-	-	-
SN-VT	I601350	AUG/VT/VT-107	B-8	ISI	-	-	-	-	-	-	-
VT	MSU-2	AUG/VT/VT-107	MECHANICAL SNUBBER	AUG	-	c	B	-	b	-	b
2	MS	PSI/VT/VT-106		OWN	-	-	-	-	-	-	-
		AUG//		PRE	-	-	c	-	-	-	-
SN-VT	I601360	AUG/VT/VT-107	B-8	ISI	-	-	-	-	-	-	-
VT	MSU-3	AUG/VT/VT-107	MECHANICAL SNUBBER	AUG	-	c	B	-	b	-	b
2	MS	PSI/VT/VT-106		OWN	-	-	-	-	-	-	-
		AUG//		PRE	-	-	c	-	-	-	-
SN-VT	I601369	AUG/VT/VT-107	B-8	ISI	-	-	-	-	-	-	-
VT	MSU-7 (TOP/WEST)	AUG/VT/VT-107	MECHANICAL SNUBBER	AUG	-	c	B	b	b	-	b
2	MS	AUG//		OWN	-	-	-	-	-	-	-
		AUG//		PRE	-	-	-	s	-	-	-
SN-VT	I601370	AUG/VT/VT-107	B-8	ISI	-	-	-	-	-	-	-
VT	MSU-7 (BOTTOM/EAST)	AUG/VT/VT-107	MECHANICAL SNUBBER	AUG	-	c	B	b	b	-	b
2	MS	AUG//		OWN	-	-	-	-	-	-	-
		AUG//		PRE	-	-	-	s	-	-	-
SN-VT	I601380	AUG/VT/VT-107	B-8	ISI	-	-	-	-	-	-	-
VT	MSU-8	AUG/VT/VT-107	HYDRAULIC SNUBBER	AUG	c	B	B	-	b	-	b
2	MS	AUG/VT/VT-107		OWN	-	-	-	-	-	-	-
		PSI/VT/VT-106		PRE	c	-	-	-	-	-	-
SN-VT	I601390	AUG/VT/VT-107	B-10A	ISI	-	-	-	-	-	-	-
VT	MSU-12	PSI/VT/VT-106	MECHANICAL SNUBBER	AUG	-	c	B	-	b	-	b
2	MS	AUG/VT/VT-107		OWN	-	-	-	-	-	-	-
		AUG//		PRE	-	c	-	-	-	-	b
SN-VT	I601399	AUG/VT/VT-107	B-10A	ISI	-	-	-	-	-	-	-
VT	MSU-13 (EAST)	AUG/VT/VT-107	MECHANICAL SNUBBER	AUG	-	c	B	-	b	-	b
2	MS	AUG//		OWN	-	-	-	-	-	-	-
		AUG//		PRE	-	-	-	-	-	-	-

Category, ItemNO, Class	Summary / CompID / System	Scope / Method / Procedure	Iso No. Comp. Desc. Code Case		Period 1 00	Period 1 02	Period 2 03	Period 2 05	Period 2 06	Period 3 08	Period 3 09
SN-VT	I601400	AUG/VT/VT-107	B-10A	ISI	-	-	-	-	-	-	-
VT	MSU-13 (WEST)	AUG/VT/VT-107	MECHANICAL SNUBBER	AUG	c	B	B	-	b	-	b
2	MS	AUG/VT/VT-107		OWN	-	-	-	-	-	-	-
		PSI/VT/VT-106		PRE	c	-	-	-	-	-	-
SN-VT	I601409	AUG/VT/VT-107	B-10A	ISI	-	-	-	-	-	-	-
VT	MSU-15 (NORTH)	AUG/VT/VT-107	MECHANICAL SNUBBER	AUG	-	c	B	-	b	-	b
2	MS	AUG//		OWN	-	-	-	-	-	-	-
				PRE	-	-	-	-	s	-	-
SN-VT	I601410	AUG/VT/VT-107	B-10A	ISI	-	-	-	-	-	-	-
VT	MSU-15 (SOUTH)	AUG/VT/VT-107	MECHANICAL SNUBBER	AUG	-	c	B	-	b	-	b
2	MS	AUG//		OWN	-	-	-	-	-	-	-
				PRE	-	-	-	-	s	-	-
SN-VT	I601419	AUG/VT/VT-107	B-10A	ISI	-	-	-	-	-	-	-
VT	MSU-16 (NORTH)	AUG/VT/VT-107	MECHANICAL SNUBBER	AUG	-	c	B	-	b	b	b
2	MS	AUG//		OWN	-	-	-	-	-	-	-
		AUG//		PRE	-	-	-	-	-	s	-
SN-VT	I601420	AUG/VT/VT-107	B-10A	ISI	-	-	-	-	-	-	-
VT	MSU-16 (SOUTH)	AUG/VT/VT-107	MECHANICAL SNUBBER	AUG	-	c	B	-	b	b	b
2	MS	AUG//		OWN	-	-	-	-	-	-	-
		AUG//		PRE	-	-	-	-	-	s	-
SN-VT	I601429	AUG/VT/VT-107	B-10A	ISI	-	-	-	-	-	-	-
VT	MSU-18 (NORTH)	AUG/VT/VT-107	MECHANICAL SNUBBER	AUG	-	c	B	-	b	-	b
2	MS	AUG/VT/VT-107		OWN	-	-	-	-	-	-	-
		AUG//		PRE	-	-	-	-	-	-	s
SN-VT	I601430	AUG/VT/VT-107	B-10A	ISI	-	-	-	-	-	-	-
VT	MSU-18 (SOUTH)	AUG/VT/VT-107	MECHANICAL SNUBBER	AUG	-	c	B	-	b	-	b
2	MS	AUG/VT/VT-107		OWN	-	-	-	-	-	-	-
		AUG/VT/VT-107		PRE	-	-	-	-	-	-	s
SN-VT	I601439	AUG/VT/VT-107	B-10A	ISI	-	-	-	-	-	-	-
VT	MSU-19 (NORTH)	AUG/VT/VT-107	MECHANICAL SNUBBER	AUG	-	c	B	-	b	-	b
2	MS	AUG//		OWN	-	-	-	-	-	-	-
		AUG//		PRE	-	-	-	-	-	-	-
SN-VT	I601440	AUG/VT/VT-107	B-10A	ISI	-	-	-	-	-	-	-
VT	MSU-19 (SOUTH)	AUG/VT/VT-107	MECHANICAL SNUBBER	AUG	-	c	B	-	b	-	b
2	MS	AUG//		OWN	-	-	-	-	-	-	-
		AUG//		PRE	-	-	-	-	-	-	-
SN-VT	I601450	AUG/VT/VT-107	B-10A	ISI	-	-	-	-	-	-	-
VT	MSU-22	AUG/VT/VT-107	MECHANICAL SNUBBER	AUG	-	c	B	-	b	-	b
2	MS	AUG/VT/VT-107		OWN	-	-	-	-	-	-	-
		AUG//		PRE	-	-	-	-	-	-	-

Category, ItemNO, Class	Summary / CompID / System	Scope / Method / Procedure	Iso No. Comp. Desc. Code Case		Period 1 00	Period 1 02	Period 2 03	Period 2 05	Period 2 06	Period 3 08	Period 3 09
SN-VT	I601460	AUG/VT/VT-107	B-10A	ISI	-	-	-	-	-	-	-
VT	MSU-25	PSI/VT/VT-106	MECHANICAL SNUBBER	AUG	-	c	B	-	b	-	b
2	MS	AUG/VT/VT-107		OWN	-	-	-	-	-	-	-
		AUG//		PRE	-	c	-	-	-	-	-
SN-VT	I601469	AUG/VT/VT-107	B-10A	ISI	-	-	-	-	-	-	-
VT	MSU-26 (TOP)	AUG/VT/VT-107	MECHANICAL SNUBBER	AUG	-	c	B	-	b	b	b
2	MS	AUG//		OWN	-	-	-	-	-	-	-
		AUG//		PRE	-	-	-	-	-	s	-
SN-VT	I601470	AUG/VT/VT-107	B-10A	ISI	-	-	-	-	-	-	-
VT	MSU-26 (BOTTOM)	PSI/VT/VT-106	MECHANICAL SNUBBER	AUG	-	c	B	-	b	b	b
2	MS	AUG/VT/VT-107		OWN	-	-	-	-	-	-	-
		AUG//		PRE	-	c	-	-	-	b	-
SN-VT	I601480	AUG/VT/VT-107	B-10A	ISI	-	-	-	-	-	-	-
VT	MSU-27	AUG/VT/VT-107	MECHANICAL SNUBBER	AUG	-	c	B	b	b	-	b
2	MS	AUG//		OWN	-	-	-	-	-	-	-
		AUG//		PRE	-	-	-	s	-	-	-
SN-VT	I601490	AUG/VT/VT-107	B-10A	ISI	-	-	-	-	-	-	-
VT	MSU-29	AUG/VT/VT-107	MECHANICAL SNUBBER	AUG	-	c	B	-	b	-	b
2	MS	AUG//		OWN	-	-	-	-	-	-	-
		AUG//		PRE	-	-	-	-	-	-	-
SN-VT	I601500	AUG/VT/VT-107	B-10A	ISI	-	-	-	-	-	-	-
VT	MSU-31	AUG/VT/VT-107	MECHANICAL SNUBBER	AUG	-	c	B	-	b	b	b
2	MS	AUG//		OWN	-	-	-	-	-	-	-
		AUG//		PRE	-	-	-	-	-	s	-
SN-VT	I601510	AUG/VT/VT-107	B-10	ISI	-	-	-	-	-	-	-
VT	MSU-32	AUG/VT/VT-107	MECHANICAL SNUBBER	AUG	-	c	B	-	b	-	b
2	MS	AUG//		OWN	-	-	-	-	-	-	-
		AUG//		PRE	-	-	-	-	-	-	-
SN-VT	I601520	AUG/VT/VT-107	B-9A	ISI	-	-	-	-	-	-	-
VT	MSU-38	AUG/VT/VT-107	MECHANICAL SNUBBER	AUG	-	c	B	b	b	-	b
2	MS	AUG//		OWN	-	-	-	-	-	-	-
		AUG//		PRE	-	-	-	s	-	-	-
SN-VT	I601530	AUG/VT/VT-107	B-9	ISI	-	-	-	-	-	-	-
VT	MSU-39	AUG/VT/VT-107	MECHANICAL SNUBBER	AUG	-	c	B	-	b	-	b
2	MS	AUG//		OWN	-	-	-	-	-	-	-
				PRE	-	-	-	-	s	-	-
SN-VT	I601540	AUG/VT/VT-107	B-9	ISI	-	-	-	-	-	-	-
VT	MSU-40	AUG/VT/VT-107	MECHANICAL SNUBBER	AUG	-	c	B	-	b	b	b
2	MS	AUG//		OWN	-	-	-	-	-	-	-
		AUG//		PRE	-	-	-	-	-	s	-

Category, ItemNO, Class	Summary / CompID / System	Scope / Method / Procedure	Iso No. Comp. Desc. Code Case		Period 1 00	Period 1 02	Period 2 03	Period 2 05	Period 2 06	Period 3 08	Period 3 09
SN-VT	I601550	AUG/VT/VT-107	B-9	ISI	-	-	-	-	-	-	-
VT	MSU-44	AUG/VT/VT-107	MECHANICAL SNUBBER	AUG	-	c	B	-	b	-	b
2	MS	AUG//		OWN	-	-	-	-	-	-	-
				PRE	-	-	-	-	-	-	s
SN-VT	I601560	AUG/VT/VT-107	B-10	ISI	-	-	-	-	-	-	-
VT	MSU-55	AUG/VT/VT-107	MECHANICAL SNUBBER	AUG	-	c	B	-	b	-	b
2	MS	AUG//		OWN	-	-	-	-	-	-	-
				PRE	-	-	-	-	s	-	-
SN-VT	I601570	AUG/VT/VT-107	B-10	ISI	-	-	-	-	-	-	-
VT	MSU-57	PSI/VT/VT-106	MECHANICAL SNUBBER	AUG	-	c	B	-	b	-	b
2	MS	AUG/VT/VT-107		OWN	-	-	-	-	-	-	-
		AUG//		PRE	-	c	-	-	-	-	b
SN-VT	I601580	AUG/VT/VT-107	B-9A	ISI	-	-	-	-	-	-	-
VT	MSU-58	PSI/VT/VT-106	MECHANICAL SNUBBER	AUG	c	B	B	-	b	-	b
2	MS	AUG/VT/VT-107		OWN	-	-	-	-	-	-	-
		AUG/VT/VT-107		PRE	c	B	B	-	b	-	-
SN-VT	I601590	AUG/VT/VT-107	B-9A	ISI	-	-	-	-	-	-	-
VT	MSU-60	AUG/VT/VT-107	MECHANICAL SNUBBER	AUG	-	c	B	-	b	-	b
4	MS	PSI/VT/VT-106		OWN	-	-	-	-	-	-	-
		AUG//		PRE	-	-	c	-	-	-	-
SN-VT	I601600	AUG/VT/VT-107	C-32	ISI	-	-	-	-	-	-	-
VT	MSU-72	AUG/VT/VT-107	MECHANICAL SNUBBER	AUG	-	c	B	-	b	-	b
3	MS	AUG//		OWN	-	-	-	-	-	-	-
		AUG//		PRE	-	-	-	-	-	-	-
SN-VT	I601610	AUG/VT/VT-107	C-32	ISI	-	-	-	-	-	-	-
VT	MSU-74	AUG/VT/VT-107	MECHANICAL SNUBBER	AUG	-	c	B	b	b	-	b
3	MS	AUG//		OWN	-	-	-	-	-	-	-
		AUG//		PRE	-	-	-	s	-	-	-
SN-VT	I601620	AUG/VT/VT-107	B-10	ISI	-	-	-	-	-	-	-
VT	MSU-75	AUG/VT/VT-107	MECHANICAL SNUBBER	AUG	-	c	B	-	b	-	b
2	MS	AUG//		OWN	-	-	-	-	-	-	-
				PRE	-	-	-	-	s	-	-
SN-VT	I601630	AUG/VT/VT-107	C-32	ISI	-	-	-	-	-	-	-
VT	MSU-78	AUG/VT/VT-107	MECHANICAL SNUBBER	AUG	-	c	B	-	b	-	b
3	MS	AUG//		OWN	-	-	-	-	-	-	-
				PRE	-	-	-	-	-	-	s
SN-VT	I601640	AUG/VT/VT-107	C-32	ISI	-	-	-	-	-	-	-
VT	MSU-80	AUG/VT/VT-107	MECHANICAL SNUBBER	AUG	-	c	B	-	b	-	b
3	MS	PSI/VT/VT-106		OWN	-	-	-	-	-	-	-
		AUG//		PRE	-	-	c	-	-	-	-

Category, ItemNO, Class	Summary / CompID / System	Scope / Method / Procedure	Iso No. Comp. Desc. Code Case		Period 1 00	Period 1 02	Period 2 03	Period 2 05	Period 2 06	Period 3 08	Period 3 09
SN-VT	I601650	AUG/VT/VT-107	C-32	ISI	-	-	-	-	-	-	-
VT	MSU-82	AUG/VT/VT-107	MECHANICAL SNUBBER	AUG	-	c	B	b	b	-	b
3	MS	AUG//		OWN	-	-	-	-	-	-	-
		AUG//		PRE	-	-	-	s	-	-	-
SN-VT	I601659	AUG/VT/VT-107	C-32	ISI	-	-	-	-	-	-	-
VT	MSU-84 (EAST)	AUG/VT/VT-107	MECHANICAL SNUBBER	AUG	-	c	B	-	b	b	b
3	MS	AUG//		OWN	-	-	-	-	-	-	-
		AUG//		PRE	-	-	-	-	-	s	-
SN-VT	I601660	AUG/VT/VT-107	C-32	ISI	-	-	-	-	-	-	-
VT	MSU-84 (WEST)	AUG/VT/VT-107	MECHANICAL SNUBBER	AUG	-	c	B	-	b	b	b
3	MS	AUG//		OWN	-	-	-	-	-	-	-
		AUG//		PRE	-	-	-	-	-	s	-
SN-VT	I601670	AUG/VT/VT-107	B-9A	ISI	-	-	-	-	-	-	-
VT	MSU-85	AUG/VT/VT-107	MECHANICAL SNUBBER	AUG	c	B	B	-	b	-	b
2	MS	AUG/VT/VT-107		OWN	-	-	-	-	-	-	-
		PSI/VT/VT-106		PRE	c	-	-	-	-	-	-
SN-VT	I601680	AUG/VT/VT-107	B-17	ISI	-	-	-	-	-	-	-
VT	RHU-8	AUG/VT/VT-107	MECHANICAL SNUBBER	AUG	-	c	B	-	b	b	b
2	RHR	AUG//		OWN	-	-	-	-	-	-	-
		AUG//		PRE	-	-	-	-	-	s	-
SN-VT	I601690	AUG/VT/VT-107	A-15	ISI	-	-	-	-	-	-	-
VT	RHU-30	AUG/VT/VT-107	MECHANICAL SNUBBER	AUG	-	c	B	-	b	-	b
1	RHR	AUG//		OWN	-	-	-	-	-	-	-
		AUG//		PRE	-	-	-	-	-	-	-
SN-VT	I601700	AUG/VT/VT-107	A-15	ISI	-	-	-	-	-	-	-
VT	RHU-33	AUG/VT/VT-107	MECHANICAL SNUBBER	AUG	-	c	B	-	b	-	b
1	RHR	AUG/VT/VT-106		OWN	-	-	-	-	-	-	-
		AUG//		PRE	-	-	c	-	-	-	-
SN-VT	I601710	AUG/VT/VT-107	B-23	ISI	-	-	-	-	-	-	-
VT	RHU-36	AUG/VT/VT-107	MECHANICAL SNUBBER	AUG	-	c	B	b	b	-	b
2	RHR	AUG//		OWN	-	-	-	-	-	-	-
		AUG//		PRE	-	-	-	s	-	-	-
SN-VT	I601720	AUG/VT/VT-107	B-25	ISI	-	-	-	-	-	-	-
VT	RHU-51	AUG/VT/VT-107	MECHANICAL SNUBBER	AUG	-	c	B	-	b	-	b
2	RHR	AUG//		OWN	-	-	-	-	-	-	-
				PRE	-	-	-	-	s	-	-
SN-VT	I601730	AUG/VT/VT-107	B-25	ISI	-	-	-	-	-	-	-
VT	RHU-53	AUG/VT/VT-107	MECHANICAL SNUBBER	AUG	-	c	B	-	b	b	b
2	RHR	AUG//		OWN	-	-	-	-	-	-	-
		AUG//		PRE	-	-	-	-	-	s	-

Category, ItemNO, Class	Summary / CompID / System	Scope / Method / Procedure	Iso No. Comp. Desc. Code Case		Period 1 00	Period 1 02	Period 2 03	Period 2 05	Period 2 06	Period 3 08	Period 3 09
SN-VT	I601740	AUG/VT/VT-107	B-26	ISI	-	-	-	-	-	-	-
VT	RHU-61	AUG/VT/VT-107	MECHANICAL SNUBBER	AUG	-	c	B	-	b	-	b
2	RHR	AUG//		OWN	-	-	-	-	-	-	-
		AUG//		PRE	-	-	-	-	-	-	-
SN-VT	I601749	AUG/VT/VT-107	B-20	ISI	-	-	-	-	-	-	-
VT	RHU-63 (NORTH)	AUG/VT/VT-107	MECHANICAL SNUBBER	AUG	c	B	B	-	b	-	b
2	RHR	AUG/VT/VT-107		OWN	-	-	-	-	-	-	-
		PSI/VT/VT-106		PRE	c	-	-	-	-	-	-
SN-VT	I601750	AUG/VT/VT-107	B-20	ISI	-	-	-	-	-	-	-
VT	RHU-63 (SOUTH)	AUG/VT/VT-107	MECHANICAL SNUBBER	AUG	c	B	B	-	b	-	b
2	RHR	AUG/VT/VT-107		OWN	-	-	-	-	-	-	-
		PSI/VT/VT-106		PRE	c	-	-	-	-	-	-
SN-VT	I601760	AUG/VT/VT-107	B-20A	ISI	-	-	-	-	-	-	-
VT	RHU-69	PSI/VT/VT-106	MECHANICAL SNUBBER	AUG	-	c	B	-	b	-	b
2	RHR	AUG/VT/VT-107		OWN	-	-	-	-	-	-	-
		AUG//		PRE	-	c	-	-	-	-	-
SN-VT	I601769	AUG/VT/VT-107	B-20A	ISI	-	-	-	-	-	-	-
VT	RHU-71 (NORTH)	AUG/VT/VT-107	MECHANICAL SNUBBER	AUG	-	c	B	-	b	-	b
2	RHR	PSI/VT/VT-106		OWN	-	-	-	-	-	-	-
		AUG//		PRE	-	-	c	-	-	-	-
SN-VT	I601770	AUG/VT/VT-107	B-20A	ISI	-	-	-	-	-	-	-
VT	RHU-71 (SOUTH)	AUG/VT/VT-107	MECHANICAL SNUBBER	AUG	-	c	B	-	b	-	b
2	RHR	PSI/VT/VT-106		OWN	-	-	-	-	-	-	-
		AUG//		PRE	-	-	c	-	-	-	-
SN-VT	I601780	AUG/VT/VT-107	B-20A	ISI	-	-	-	-	-	-	-
VT	RHU-72	AUG/VT/VT-107	MECHANICAL SNUBBER	AUG	-	c	B	-	b	-	b
2	RHR	AUG//		OWN	-	-	-	-	-	-	-
				PRE	-	-	-	-	s	-	-
SN-VT	I601790	AUG/VT/VT-107	B-20	ISI	-	-	-	-	-	-	-
VT	RHU-75	AUG/VT/VT-107	MECHANICAL SNUBBER	AUG	-	c	B	-	b	-	b
2	RHR	AUG//		OWN	-	-	-	-	-	-	-
		AUG//		PRE	-	-	-	-	-	-	-
SN-VT	I601800	AUG/VT/VT-107	B-21	ISI	-	-	-	-	-	-	-
VT	RHU-92	PSI/VT/VT-106	MECHANICAL SNUBBER	AUG	c	B	B	-	b	-	b
2	RHR	AUG/VT/VT-107		OWN	-	-	-	-	-	-	-
		AUG/VT/VT-107		PRE	c	B	B	-	-	-	-
SN-VT	I601810	AUG/VT/VT-107	B-19	ISI	-	-	-	-	-	-	-
VT	RHU-109	AUG/VT/VT-107	MECHANICAL SNUBBER	AUG	-	c	B	-	b	-	b
2	HPSI	AUG//		OWN	-	-	-	-	-	-	-
		AUG//		PRE	-	-	-	-	-	-	-

Category, ItemNO, Class	Summary / CompID / System	Scope / Method / Procedure	Iso No. Comp. Desc. Code Case		Period 1 00	Period 1 02	Period 2 03	Period 2 05	Period 2 06	Period 3 08	Period 3 09
SN-VT	I601820	AUG/VT/VT-107	B-19	ISI	-	-	-	-	-	-	-
VT	RHU-110	AUG/VT/VT-107	MECHANICAL SNUBBER	AUG	-	c	B	-	b	-	b
2	HPSI	AUG//		OWN	-	-	-	-	-	-	-
		AUG//		PRE	-	-	-	-	-	-	-
SN-VT	I601830	AUG/VT/VT-107	B-16B	ISI	-	-	-	-	-	-	-
VT	RHU-119	AUG/VT/VT-107	MECHANICAL SNUBBER	AUG	-	c	B	-	b	b	b
2	HPSI	AUG//		OWN	-	-	-	-	-	-	-
		AUG//		PRE	-	-	-	-	-	s	-
SN-VT	I601840	AUG/VT/VT-107	B-19	ISI	-	-	-	-	-	-	-
VT	RHU-123	AUG/VT/VT-107	MECHANICAL SNUBBER	AUG	-	c	B	-	b	-	b
2	HPSI	AUG//		OWN	-	-	-	-	-	-	-
		AUG//		PRE	-	-	-	-	-	-	-
SN-VT	I601850	AUG/VT/VT-107	A-17	ISI	-	-	-	-	-	-	-
VT	SIU-3	AUG/VT/VT-107	MECHANICAL SNUBBER	AUG	-	c	B	-	b	-	b
1	HPSI	AUG//		OWN	-	-	-	-	-	-	-
		AUG//		PRE	-	-	-	-	-	-	-
SN-VT	I601860	AUG/VT/VT-107	A-16	ISI	-	-	-	-	-	-	-
VT	SIU-47	AUG/VT/VT-107	MECHANICAL SNUBBER	AUG	-	c	B	-	b	-	b
1	HPSI	AUG//		OWN	-	-	-	-	-	-	-
				PRE	-	-	-	-	-	-	s
SN-VT	I601870	AUG/VT/VT-107	A-14	ISI	-	-	-	-	-	-	-
VT	SIU-52	AUG/VT/VT-107	MECHANICAL SNUBBER	AUG	-	c	B	b	b	-	b
1	RHR	AUG//		OWN	-	-	-	-	-	-	-
		AUG//		PRE	-	-	-	s	-	-	-
SN-VT	I601890	AUG/VT/VT-107	C-13	ISI	-	-	-	-	-	-	-
VT	SWU-254	PSI/VT/VT-106	MECHANICAL SNUBBER	AUG	-	c	B	-	b	-	b
3	SW	AUG/VT/VT-107		OWN	-	-	-	-	-	-	-
		AUG//		PRE	-	c	-	-	-	-	-
SN-VT	I601900	AUG/VT/VT-107	B-50A	ISI	-	-	-	-	-	-	-
VT	SWU-308	AUG/VT/VT-107	MECHANICAL SNUBBER	AUG	-	c	B	-	b	-	b
2	SW	PSI/VT/VT-106		OWN	-	-	-	-	-	-	-
		AUG//		PRE	-	-	c	-	-	-	-
SN-VT	I601910	AUG/VT/VT-107	B-50A	ISI	-	-	-	-	-	-	-
VT	SWU-309	AUG/VT/VT-107	MECHANICAL SNUBBER	AUG	-	c	B	b	b	-	b
2	SW	AUG//		OWN	-	-	-	-	-	-	-
		AUG//		PRE	-	-	-	s	-	-	-
SN-VT	I601920	AUG/VT/VT-107	C-16B	ISI	-	-	-	-	-	-	-
VT	SWU-370	AUG/VT/VT-107	MECHANICAL SNUBBER	AUG	-	c	B	-	b	-	b
3	SW	AUG//		OWN	-	-	-	-	-	-	-
				PRE	-	-	-	-	s	-	-

Category, ItemNO, Class	Summary / CompID / System	Scope / Method / Procedure	Iso No. Comp. Desc. Code Case		Period 1 00	Period 1 02	Period 2 03	Period 2 05	Period 2 06	Period 3 08	Period 3 09
SN-VT	I601930	AUG/VT/VT-107	C-24	ISI	-	-	-	-	-	-	-
VT	AFU-205 (AFW-10)	PSI/VT/VT-106	HYDRAULIC SNUBBER	AUG	c	B	B	-	b	-	b
2	SAFW	AUG/VT/VT-107		OWN	-	-	-	-	-	-	-
		AUG/VT/VT-107		PRE	c	B	-	-	-	-	b
SN-VT	I601940	AUG/VT/VT-107	C-24	ISI	-	-	-	-	-	-	-
VT	AFU-208 (AFW-13)	PSI/VT/VT-106	HYDRAULIC SNUBBER	AUG	-	c	B	-	b	b	b
2	SAFW	AUG/VT/VT-107		OWN	-	-	-	-	-	-	-
		PSI/VT/VT-106		PRE	-	c	B	-	-	b	-
SN-VT	I601970	AUG/VT/VT-107	C-20	ISI	-	-	-	-	-	-	-
VT	AFU-224 (AFW-28)	PSI/VT/VT-106	HYDRAULIC SNUBBER	AUG	-	c	B	-	b	-	b
2	SAFW	AUG/VT/VT-107		OWN	-	-	-	-	-	-	-
		PSI/VT/VT-106		PRE	-	c	B	-	-	-	-
SN-VT	I601980	AUG/VT/VT-107	C-20	ISI	-	-	-	-	-	-	-
VT	AFU-226 (AFW-27)	PSI/VT/VT-106	HYDRAULIC SNUBBER	AUG	-	c	B	-	b	-	b
2	SAFW	AUG/VT/VT-107		OWN	-	-	-	-	-	-	-
		PSI/VT/VT-106		PRE	-	c	B	-	b	-	-
SN-VT	I601990	AUG/VT/VT-107	C-20	ISI	-	-	-	-	-	-	-
VT	AFU-225 (AFW-29)	AUG/VT/VT-107	HYDRAULIC SNUBBER	AUG	-	c	B	b	b	b	b
2	SAFW	PSI/VT/VT-106		OWN	-	-	-	-	-	-	-
		AUG/VT/VT-107		PRE	-	c	B	b	-	b	-
SN-VT	I602000	AUG/VT/VT-107	C-20	ISI	-	-	-	-	-	-	-
VT	AFU-227 (AFW-31)	AUG/VT/VT-107	MECHANICAL SNUBBER	AUG	-	c	B	-	b	-	b
2	SAFW	AUG//		OWN	-	-	-	-	-	-	-
		AUG//		PRE	-	-	-	-	-	-	-
SN-VT	I602010	AUG/VT/VT-107	S-2	ISI	-	-	-	-	-	-	-
VT	N601	AUG/VT/VT-107	HYDRAULIC SNUBBER	AUG	-	c	B	-	b	-	b
Q	PZR	PSI/VT/VT-106		OWN	-	-	-	-	-	-	-
		AUG//		PRE	-	-	c	-	-	-	-
SN-VT	I602020	AUG/VT/VT-107	S-2	ISI	-	-	-	-	-	-	-
VT	N602	AUG/VT/VT-107	HYDRAULIC SNUBBER	AUG	c	B	B	-	b	-	b
Q	PZR	PSI/VT/VT-106		OWN	-	-	-	-	-	-	-
		AUG/VT/VT-107		PRE	c	-	B	-	-	-	b
SN-VT	I602030	AUG/VT/VT-107	S-2	ISI	-	-	-	-	-	-	-
VT	N604	AUG/VT/VT-107	HYDRAULIC SNUBBER	AUG	-	c	B	-	b	b	b
Q	PZR	AUG//		OWN	-	-	-	-	-	-	-
		AUG//		PRE	-	-	-	-	-	s	-
SN-VT	I602040	AUG/VT/VT-107	S-2	ISI	-	-	-	-	-	-	-
VT	N605	PSI/VT/VT-106	HYDRAULIC SNUBBER	AUG	-	c	B	-	b	-	b
Q	PZR	AUG/VT/VT-107		OWN	-	-	-	-	-	-	-
		PSI/VT/VT-106		PRE	-	c	B	-	-	-	-

Category, ItemNO, Class	Summary / CompID / System	Scope / Method / Procedure	Iso No. Comp. Desc. Code Case		Period 1 00	Period 1 02	Period 2 03	Period 2 05	Period 2 06	Period 3 08	Period 3 09
SN-VT	I602050	AUG/VT/VT-107	S-2	ISI	-	-	-	-	-	-	-
VT	N607	AUG/VT/VT-107	HYDRAULIC SNUBBER	AUG	-	c	B	-	b	-	b
Q	PZR	AUG//		OWN	-	-	-	-	-	-	-
				PRE	-	-	-	-	s	-	-
SN-VT	I602060	AUG/VT/VT-107	S-2	ISI	-	-	-	-	-	-	-
VT	N608	AUG/VT/VT-107	HYDRAULIC SNUBBER	AUG	-	c	B	b	b	-	b
Q	PZR	AUG//		OWN	-	-	-	-	-	-	-
		AUG//		PRE	-	-	-	s	-	-	-
SN-VT	I602070	AUG/VT/VT-107	S-2	ISI	-	-	-	-	-	-	-
VT	N615	AUG/VT/VT-107	HYDRAULIC SNUBBER	AUG	-	c	B	-	b	-	b
Q	PZR	AUG//		OWN	-	-	-	-	-	-	-
				PRE	-	-	-	-	s	-	-
SN-VT	I602080	AUG/VT/VT-107	S-2	ISI	-	-	-	-	-	-	-
VT	N616	AUG/VT/VT-107	HYDRAULIC SNUBBER	AUG	-	c	B	-	b	-	b
Q	PZR	AUG/VT/VT-107		OWN	-	-	-	-	-	-	-
		PSI/VT/VT-106		PRE	-	-	c	-	-	-	b
SN-VT	I602090	AUG/VT/VT-107	S-1	ISI	-	-	-	-	-	-	-
VT	PS-2	PSI/VT/VT-106	HYDRAULIC SNUBBER	AUG	-	c	B	b	b	-	b
Q	PZR	AUG/VT/VT-107		OWN	-	-	-	-	-	-	-
		PSI/VT/VT-106		PRE	-	c	B	b	-	-	-
SN-VT	I602100	AUG/VT/VT-107	S-1	ISI	-	-	-	-	-	-	-
VT	PS-4	AUG/VT/VT-107	HYDRAULIC SNUBBER	AUG	-	c	B	-	b	-	b
Q	PZR	AUG//		OWN	-	-	-	-	-	-	-
		PSI/VT/VT-106		PRE	-	-	-	-	s	-	-
SN-VT	I602110	AUG/VT/VT-107	A-12	ISI	-	-	-	-	-	-	-
VT	PS-5	PSI/VT/VT-106	HYDRAULIC SNUBBER	AUG	-	c	B	-	b	-	b
1	PZR	AUG/VT/VT-107		OWN	-	-	-	-	-	-	-
		AUG//		PRE	-	c	-	-	-	-	-
SN-VT	I602120	AUG/VT/VT-107	A-12	ISI	-	-	-	-	-	-	-
VT	PS-6	AUG/VT/VT-107	HYDRAULIC SNUBBER	AUG	-	c	B	-	b	-	b
1	PZR	AUG//		OWN	-	-	-	-	-	-	-
		AUG//		PRE	-	-	-	-	-	-	-
SN-VT	I602130	AUG/VT/VT-107	A-12	ISI	-	-	-	-	-	-	-
VT	PS-8	AUG/VT/VT-107	HYDRAULIC SNUBBER	AUG	-	c	B	-	b	b	b
1	PZR	AUG//		OWN	-	-	-	-	-	-	-
		AUG//		PRE	-	-	-	-	-	s	-
SN-VT	I602140	AUG/VT/VT-107	S-1A	ISI	-	-	-	-	-	-	-
VT	PS-9	AUG/VT/VT-107	HYDRAULIC SNUBBER	AUG	-	c	B	-	b	-	b
Q	PZR	PSI/VT/VT-106		OWN	-	-	-	-	-	-	-
		AUG//		PRE	-	-	c	-	-	-	-

Category, ItemNO, Class	Summary / CompID / System	Scope / Method / Procedure	Iso No. Comp. Desc. Code Case		Period 1 00	Period 1 02	Period 2 03	Period 2 05	Period 2 06	Period 3 08	Period 3 09
SN-VT	I602150	AUG/VT/VT-107	S-1A	ISI	-	-	-	-	-	-	-
VT	PS-10	PSI/VT/VT-106	HYDRAULIC SNUBBER	AUG	-	c	B	-	b	-	b
Q	PZR	AUG/VT/VT-107		OWN	-	-	-	-	-	-	-
		AUG//		PRE	-	c	-	-	-	-	-
SN-VT	I602160	AUG/VT/VT-107	S-1A	ISI	-	-	-	-	-	-	-
VT	PS-11	AUG/VT/VT-107	HYDRAULIC SNUBBER	AUG	-	c	B	-	b	-	b
Q	PZR	AUG//		OWN	-	-	-	-	-	-	-
		AUG//		PRE	-	-	-	-	-	-	-
SN-VT	I602200	AUG/VT/VT-107	S-3	ISI	-	-	-	-	-	-	-
VT	CVU-131	AUG/VT/VT-107	MECHANICAL SNUBBER	AUG	-	c	B	-	b	-	b
2	CVCS-CHRG	AUG//		OWN	-	-	-	-	-	-	-
		AUG//		PRE	-	-	-	-	-	-	-
SN-VT	I602300	AUG/VT/VT-107	S-3	ISI	-	-	-	-	-	-	-
VT	CVU-550	AUG/VT/VT-107	MECHANICAL SNUBBER	AUG	-	c	B	-	b	-	b
2	CVCS-CHRG	AUG//		OWN	-	-	-	-	-	-	-
		AUG//		PRE	-	-	-	-	-	-	-
SN-VT	I602400	AUG/VT/VT-107	C-24	ISI	-	-	-	-	-	-	-
VT	AFU-209	AUG/VT/VT-106	HYDRAULIC SNUBBER	AUG	-	c	B	-	b	-	b
2	SAFW	AUG/VT/VT-107		OWN	-	-	-	-	-	-	-
		PSI/VT/VT-106		PRE	-	c	B	-	-	-	-
SN-VT	I602500	AUG/VT/VT-107	C-20	ISI	-	-	-	-	-	-	-
VT	AFU-229	PSI/VT/VT-106	HYDRAULIC SNUBBER	AUG	-	c	B	b	b	-	b
2	SAFW	AUG/VT/VT-107		OWN	-	-	-	-	-	-	-
		PSI/VT/VT-106		PRE	-	c	B	b	-	-	-
SS-CS	I700000	OWN/VT/VT-106	C-1H	ISI	-	-	-	-	-	-	-
SSF1.20A	AFU-130	AUG//	U-BOLT & IA	AUG	-	-	-	-	-	-	-
Q	AFW	AUG/VT/VT-107		OWN	-	-	c	-	-	-	-
		PSI/VT/VT-106		PRE	-	-	-	-	-	-	-
SS-CS	I700030		C-1G	ISI	-	-	-	-	-	-	-
SSF1.20A	AFU-138		GUIDE	AUG	-	-	-	-	-	-	-
4	AFW			OWN	-	-	-	-	-	-	-
				PRE	-	-	-	-	-	-	-
SS-CS	I700040		C-1G	ISI	-	-	-	-	-	-	-
SSF1.20A	AFU-139		GUIDE	AUG	-	-	-	-	-	-	-
4	AFW			OWN	-	-	-	-	-	-	-
				PRE	-	-	-	-	-	-	-
SS-CS	I700050		C-1	ISI	-	-	-	-	-	-	-
SSF1.20A	AFU-88		RIGID HANGER	AUG	-	-	-	-	-	-	-
3	AFW			OWN	-	-	-	-	-	-	-
				PRE	-	-	-	-	-	-	-

Category, ItemNO, Class	Summary / CompID / System	Scope / Method / Procedure	Iso No. Comp. Desc. Code Case		Period 1 00	Period 1 02	Period 2 03	Period 2 05	Period 2 06	Period 3 08	Period 3 09
SS-CS	I700060		C-16	ISI	-	-	-	-	-	-	-
SSF1.20A	AFU-4		GUIDE	AUG	-	-	-	-	-	-	-
Q	AFW			OWN	-	-	-	-	-	-	-
				PRE	-	-	-	-	-	-	-
SS-CS	I700070		C-16	ISI	-	-	-	-	-	-	-
SSF1.20A	AFU-5		GUIDE	AUG	-	-	-	-	-	-	-
Q	AFW			OWN	-	-	-	-	-	-	-
				PRE	-	-	-	-	-	-	-
SS-CS	I700080		C-16	ISI	-	-	-	-	-	-	-
SSF1.20A	AFU-6		RIGID HANGER	AUG	-	-	-	-	-	-	-
Q	AFW			OWN	-	-	-	-	-	s	-
				PRE	-	-	-	-	-	-	-
SS-CS	I700090		C-16	ISI	-	-	-	-	-	-	-
SSF1.20A	AFU-7		U-BOLT	AUG	-	-	-	-	-	-	-
Q	AFW			OWN	-	-	-	-	-	-	-
				PRE	-	-	-	-	-	-	-
SS-CS	I700130		SS-2	ISI	-	-	-	-	-	-	-
SSF1.20A	CVU-129		GUIDE & IA	AUG	-	-	-	-	-	-	-
4	PZR			OWN	-	-	-	-	-	-	-
				PRE	-	-	-	-	-	-	-
SS-CS	I700140		SS-2	ISI	-	-	-	-	-	-	-
SSF1.20A	CVU-130		RIGID HANGER & IA	AUG	-	-	-	-	-	-	-
4	PZR			OWN	-	-	-	-	-	-	-
				PRE	-	-	-	-	-	-	-
SS-CS	I700160		A-23	ISI	-	-	-	-	-	-	-
SSF1.20A	CVU-58		U-B0LT	AUG	-	-	-	-	-	-	-
1	CVCS-LTDN			OWN	-	-	-	-	-	-	-
				PRE	-	-	-	-	-	-	-
SS-CS	I700230		B-14	ISI	-	-	-	-	-	-	-
SSF1.20A	FWU-36		RIGID RESTRAINT	AUG	-	-	-	-	-	-	-
Q	FW			OWN	-	-	-	-	-	-	-
				PRE	-	-	-	-	-	-	-
SS-CS	I700250		B-14	ISI	-	-	-	-	-	-	-
SSF1.20A	FWU-34		RIGID RESTRAINT	AUG	-	-	-	-	-	-	-
Q	FW			OWN	-	-	-	-	-	-	-
				PRE	-	-	-	-	-	-	-
SS-CS	I700290		HE-5	ISI	-	-	-	-	-	-	-
SSF1.20A	FWU-30		GUIDE	AUG	-	-	-	-	-	-	-
Q	FW			OWN	-	-	-	-	-	-	-
				PRE	-	-	-	-	-	-	-

Category, ItemNO, Class	Summary / CompID / System	Scope / Method / Procedure	Iso No. Comp. Desc. Code Case		Period 1 00	Period 1 02	Period 2 03	Period 2 05	Period 2 06	Period 3 08	Period 3 09
SS-CS	I700450	OWN/VT/VT-106	B-9A	ISI	-	-	-	-	-	-	-
SSF1.20A	MSU-59		RIGID SUPPORT & IA	AUG	-	-	-	-	-	-	-
4	MS			OWN	-	c	-	-	-	-	-
				PRE	-	-	-	-	-	-	-
SS-CS	I700470		B-9A	ISI	-	-	-	-	-	-	-
SSF1.20A	MSU-51		RIGID SUPPORT & IA	AUG	-	-	-	-	-	-	-
4	MS			OWN	-	-	-	-	-	-	-
				PRE	-	-	-	-	-	-	-
SS-CS	I700480		B-9A	ISI	-	-	-	-	-	-	-
SSF1.20A	MSU-52		RIGID SUPPORT & IA	AUG	-	-	-	-	-	-	-
4	MS			OWN	-	-	-	-	-	-	-
				PRE	-	-	-	-	-	-	-
SS-CS	I700490		B-9A	ISI	-	-	-	-	-	-	-
SSF1.20A	MSU-53		RIGID SUPPORT & IA	AUG	-	-	-	-	-	-	-
4	MS			OWN	-	-	-	-	-	-	-
				PRE	-	-	-	-	-	-	-
SS-CS	I700500		B-9A	ISI	-	-	-	-	-	-	-
SSF1.20A	MSU-54		RIGID SUPPORT & IA	AUG	-	-	-	-	-	-	-
2	MS			OWN	-	-	-	-	-	-	-
				PRE	-	-	-	-	-	-	-
SS-CS	I700510		B-10	ISI	-	-	-	-	-	-	-
SSF1.20A	MSU-47		RIGID SUPPORT & IA	AUG	-	-	-	-	-	-	-
4	MS			OWN	-	-	-	-	-	-	-
				PRE	-	-	-	-	-	-	-
SS-CS	I700520		B-10	ISI	-	-	-	-	-	-	-
SSF1.20A	MSU-48		RIGID SUPPORT & IA	AUG	-	-	-	-	-	-	-
4	MS			OWN	-	-	-	-	-	-	-
				PRE	-	-	-	-	-	-	-
SS-CS	I700530		B-10	ISI	-	-	-	-	-	-	-
SSF1.20A	MSU-49		RIGID SUPPORT & IA	AUG	-	-	-	-	-	-	-
4	MS			OWN	-	-	-	-	-	-	-
				PRE	-	-	-	-	-	-	-
SS-CS	I700540		B-10	ISI	-	-	-	-	-	-	-
SSF1.20A	MSU-50		RIGID SUPPORT & IA	AUG	-	-	-	-	-	-	-
4	MS			OWN	-	-	-	-	-	-	-
				PRE	-	-	-	-	-	-	-
SS-CS	I700550		B-10	ISI	-	-	-	-	-	-	-
SSF1.20A	MSU-56		RIGID SUPPORT & IA	AUG	-	-	-	-	-	-	-
4	MS			OWN	-	-	-	-	-	-	-
				PRE	-	-	-	-	-	-	-

Category, ItemNO, Class	Summary / CompID / System	Scope / Method / Procedure	Iso No. Comp. Desc. Code Case		Period 1 00	Period 1 02	Period 2 03	Period 2 05	Period 2 06	Period 3 08	Period 3 09
SS-CS	I700580	OWN/VT/VT-106	B-21	ISI	-	-	A	-	-	-	-
SSF1.20A	RHU-87	ISI/VT/VT-106	RIGID SUPPORT & IA	AUG	-	-	-	-	-	-	-
Q	RHR	ISI/VT/VT-106		OWN	-	-	-	s	-	-	-
				PRE	-	-	-	-	-	-	-
SS-CS	I700590	ISI/VT/VT-106	B-21	ISI	-	-	A	-	-	-	-
SSF1.20A	RHU-90	ISI/VT/VT-106	RIGID SUPPORT & IA	AUG	-	-	-	-	-	-	-
Q	RHR			OWN	-	-	-	-	-	-	-
				PRE	-	-	-	-	-	-	-
SS-CS	I700600	ISI/VT/VT-106	B-21	ISI	-	-	E	-	-	-	-
SSF1.20A	RHU-91		RIGID SUPPORT	AUG	-	-	-	-	-	-	-
Q	RHR			OWN	-	-	-	-	-	-	-
				PRE	-	-	-	-	-	-	-
SS-CS	I700660	OWN/VT/VT-106	SS-3	ISI	-	-	-	-	-	-	-
SSF1.20A	BDU-21		RIGID SUPPORT	AUG	-	-	-	-	-	-	-
2	SG-BD			OWN	-	c	-	-	-	-	-
				PRE	-	-	-	-	-	-	-
SS-CS	I700710		A-17	ISI	-	-	-	-	-	-	-
SSF1.20A	SIU-8		RIGID SUPPORT	AUG	-	-	-	-	-	-	-
4	HPSI			OWN	-	-	-	-	-	-	-
				PRE	-	-	-	-	-	-	-
SS-CS	I700790	OWN/VT/VT-106	C-28A	ISI	-	-	-	-	-	-	-
SSF1.20A	SWU-525		U-BOLT	AUG	-	-	-	-	-	-	-
4	SAFW			OWN	-	c	-	-	-	-	-
				PRE	-	-	-	-	-	-	-
SS-CS	I700820		C-28A	ISI	-	-	-	-	-	-	-
SSF1.20A	SWU-534		GUIDE	AUG	-	-	-	-	-	-	-
4	SAFW			OWN	-	-	-	-	-	-	-
				PRE	-	-	-	-	-	-	-
SS-CS	I700830		C-28A	ISI	-	-	-	-	-	-	-
SSF1.20A	SWU-602		GUIDE	AUG	-	-	-	-	-	-	-
4	SAFW			OWN	-	-	-	-	-	-	-
				PRE	-	-	-	-	-	-	-
SS-CS	I700840		C-28A	ISI	-	-	-	-	-	-	-
SSF1.20A	SWU-603		GUIDE	AUG	-	-	-	-	-	-	-
4	SAFW			OWN	-	-	-	-	-	-	-
				PRE	-	-	-	-	-	-	-
SS-CS	I700850		C-28A	ISI	-	-	-	-	-	-	-
SSF1.20A	SWU-604		GUIDE	AUG	-	-	-	-	-	-	-
4	SAFW			OWN	-	-	-	-	-	-	-
				PRE	-	-	-	-	-	-	-

Category, ItemNO, Class	Summary / CompID / System	Scope / Method / Procedure	Iso No. Comp. Desc. Code Case		Period 1 00	Period 1 02	Period 2 03	Period 2 05	Period 2 06	Period 3 08	Period 3 09
SS-CS	I700880		C-28A	ISI	-	-	-	-	-	-	-
SSF1.20A	SWU-607		GUIDE	AUG	-	-	-	-	-	-	-
4	SAFW			OWN	-	-	-	-	-	-	-
				PRE	-	-	-	-	-	-	-
SS-CS	I700890		C-17	ISI	-	-	-	-	-	-	-
SSF1.20A	SWU-637		GUIDE	AUG	-	-	-	-	-	-	-
4	SW			OWN	-	-	-	-	-	-	-
				PRE	-	-	-	-	-	-	-
SS-CS	I700920		C-17	ISI	-	-	-	-	-	-	-
SSF1.20A	SWU-640		GUIDE	AUG	-	-	-	-	-	-	-
4	SW			OWN	-	-	-	-	-	-	-
				PRE	-	-	-	-	-	-	-
SS-CS	I700930		C-17	ISI	-	-	-	-	-	-	-
SSF1.20A	SWU-638		GUIDE	AUG	-	-	-	-	-	-	-
4	SW			OWN	-	-	-	-	-	-	-
				PRE	-	-	-	-	-	-	-
SS-CS	I700010		C-1H	ISI	-	-	-	-	-	-	-
SSF1.20B	AFU-132		GUIDE	AUG	-	-	-	-	-	-	-
4	AFW			OWN	-	-	-	-	-	-	-
				PRE	-	-	-	-	-	-	-
SS-CS	I700020		C-1G	ISI	-	-	-	-	-	-	-
SSF1.20B	AFU-137		GUIDE	AUG	-	-	-	-	-	-	-
4	AFW			OWN	-	-	-	-	-	-	-
				PRE	-	-	-	-	-	-	-
SS-CS	I700100		B-32	ISI	-	-	-	-	-	-	-
SSF1.20B	CVU-84		GUIDE & IA	AUG	-	-	-	-	-	-	-
Q	CVCS-LTDN			OWN	-	-	-	-	-	-	-
				PRE	-	-	-	-	-	-	-
SS-CS	I700110		SS-1	ISI	-	-	-	-	-	-	-
SSF1.20B	CVU-125		GUIDE & IA	AUG	-	-	-	-	-	-	-
2	CVCS-CHRG			OWN	-	-	-	-	-	-	-
				PRE	-	-	-	-	-	-	-
SS-CS	I700120		SS-1	ISI	-	-	-	-	-	-	-
SSF1.20B	CVU-126		GUIDE	AUG	-	-	-	-	-	-	-
2	CVCS-CHRG			OWN	-	-	-	-	-	-	-
				PRE	-	-	-	-	-	-	-
SS-CS	I700150		A-29	ISI	-	-	-	-	-	-	-
SSF1.20B	CVU-56		GUIDE	AUG	-	-	-	-	-	-	-
2	CVCS-CHRG			OWN	-	-	-	-	-	-	-
				PRE	-	-	-	-	-	-	-

Category, ItemNO, Class	Summary / CompID / System	Scope / Method / Procedure	Iso No. Comp. Desc. Code Case		Period 1 00	Period 1 02	Period 2 03	Period 2 05	Period 2 06	Period 3 08	Period 3 09
SS-CS	I700300	OWN/VT/VT-106	HE-5	ISI	-	-	-	-	-	-	-
SSF1.20B	FWU-29		RIGID SUPPORT & IA	AUG	-	-	-	-	-	-	-
Q	FW			OWN	-	-	c	-	-	-	-
				PRE	-	-	-	-	-	-	-
SS-CS	I700310		HE-5	ISI	-	-	-	-	-	-	-
SSF1.20B	FWU-28		ANCHOR & IA	AUG	-	-	-	-	-	-	-
Q	FW			OWN	-	-	-	-	-	-	-
				PRE	-	-	-	-	-	-	-
SS-CS	I700430		HE-5	ISI	-	-	-	-	-	-	-
SSF1.20B	FWU-27		RIGID SUPPORT & IA	AUG	-	-	-	-	-	-	-
Q	FW			OWN	-	-	-	-	-	-	-
				PRE	-	-	-	-	-	-	-
SS-CS	I700440	OWN/VT/VT-106	HE-7	ISI	-	-	-	-	-	-	-
SSF1.20B	MSU-35		ANCHOR & IA	AUG	-	-	-	-	-	-	-
Q	MS			OWN	-	c	-	-	-	-	-
				PRE	-	-	-	-	-	-	-
SS-CS	I700570	ISI/VT/VT-106	B-21	ISI	-	-	A	-	-	-	-
SSF1.20B	RHU-86	ISI/VT/VT-106	GUIDE & IA	AUG	-	-	-	-	-	-	-
Q	RHR			OWN	-	-	-	-	-	-	-
				PRE	-	-	-	-	-	-	-
SS-CS	I700610		C-22A	ISI	-	-	-	-	-	-	-
SSF1.20B	AFU-169		GUIDE	AUG	-	-	-	-	-	-	-
4	SAFW			OWN	-	-	-	-	-	-	-
				PRE	-	-	-	-	-	-	-
SS-CS	I700620		C-22A	ISI	-	-	-	-	-	-	-
SSF1.20B	AFU-170		GUIDE	AUG	-	-	-	-	-	-	-
4	SAFW			OWN	-	-	-	-	-	-	-
				PRE	-	-	-	-	-	-	-
SS-CS	I700630		C-22A	ISI	-	-	-	-	-	-	-
SSF1.20B	AFU-175		GUIDE	AUG	-	-	-	-	-	-	-
4	SAFW			OWN	-	-	-	-	-	-	-
				PRE	-	-	-	-	-	-	-
SS-CS	I700640		C-22A	ISI	-	-	-	-	-	-	-
SSF1.20B	AFU-176		GUIDE	AUG	-	-	-	-	-	-	-
4	SAFW			OWN	-	-	-	-	-	-	-
				PRE	-	-	-	-	-	-	-
SS-CS	I700650		C-22A	ISI	-	-	-	-	-	-	-
SSF1.20B	AFU-177		GUIDE	AUG	-	-	-	-	-	-	-
4	SAFW			OWN	-	-	-	-	-	-	-
				PRE	-	-	-	-	-	-	-

Category, ItemNO, Class	Summary / CompID / System	Scope / Method / Procedure	Iso No. Comp. Desc. Code Case		Period 1 00	Period 1 02	Period 2 03	Period 2 05	Period 2 06	Period 3 08	Period 3 09
SS-CS	I700680		SS-3	ISI	-	-	-	-	-	-	-
SSF1.20B	BDU-23		ANCHOR & IA	AUG	-	-	-	-	-	-	-
4	SG-BD			OWN	-	-	-	-	-	-	-
				PRE	-	-	-	-	-	-	-
SS-CS	I700690		SS-3	ISI	-	-	-	-	-	-	-
SSF1.20B	BDU-26		GUIDE	AUG	-	-	-	-	-	-	-
4	SG-BD			OWN	-	-	-	-	-	-	-
				PRE	-	-	-	-	-	-	-
SS-CS	I700700		SS-3	ISI	-	-	-	-	-	-	-
SSF1.20B	BDU-27		ANCHOR & IA	AUG	-	-	-	-	-	-	-
4	SG-BD			OWN	-	-	-	-	-	-	-
				PRE	-	-	-	-	-	-	-
SS-CS	I700720		A-16	ISI	-	-	-	-	-	-	-
SSF1.20B	SIU-55		GUIDE	AUG	-	-	-	-	-	-	-
2	HPSI			OWN	-	-	-	-	-	-	-
				PRE	-	-	-	-	-	-	-
SS-CS	I700730		C-16	ISI	-	-	-	-	-	-	-
SSF1.20B	SWU-363		GUIDE	AUG	-	-	-	-	-	-	-
4	SW			OWN	-	-	-	-	-	-	-
				PRE	-	-	-	-	-	-	-
SS-CS	I700750		C-16	ISI	-	-	-	-	-	-	-
SSF1.20B	SWU-365		RIGID SUPPORT	AUG	-	-	-	-	-	-	-
4	SW			OWN	-	-	-	-	-	-	-
				PRE	-	-	-	-	-	-	-
SS-CS	I700760	OWN/VT/VT-106	C-16	ISI	-	-	-	-	-	-	-
SSF1.20B	SWU-366		GUIDE & IA	AUG	-	-	-	-	-	-	-
3	SW			OWN	-	c	-	-	-	-	-
				PRE	-	-	-	-	-	-	-
SS-CS	I700770	OWN/VT/VT-106	C-28A	ISI	-	-	-	-	-	-	-
SSF1.20B	SWU-523		GUIDE & IA	AUG	-	-	-	-	-	-	-
Q	SAFW			OWN	-	-	-	-	-	s	-
				PRE	-	-	-	-	-	-	-
SS-CS	I700780	OWN/VT/VT-106	C-28A	ISI	-	-	-	-	-	-	-
SSF1.20B	SWU-524		GUIDE & IA	AUG	-	-	-	-	-	-	-
Q	SAFW			OWN	-	-	-	-	-	s	-
				PRE	-	-	-	-	-	-	-
SS-CS	I700800		C-28A	ISI	-	-	-	-	-	-	-
SSF1.20B	SWU-526		GUIDE	AUG	-	-	-	-	-	-	-
4	SAFW			OWN	-	-	-	-	-	-	-
				PRE	-	-	-	-	-	-	-

Category, ItemNO, Class	Summary / CompID / System	Scope / Method / Procedure	Iso No. Comp. Desc. Code Case		Period 1 00	Period 1 02	Period 2 03	Period 2 05	Period 2 06	Period 3 08	Period 3 09
SS-CS	I700810		C-28A	ISI	-	-	-	-	-	-	-
SSF1.20B	SWU-533		GUIDE	AUG	-	-	-	-	-	-	-
4	SAFW			OWN	-	-	-	-	-	-	-
				PRE	-	-	-	-	-	-	-
SS-CS	I700860		C-28A	ISI	-	-	-	-	-	-	-
SSF1.20B	SWU-605		GUIDE	AUG	-	-	-	-	-	-	-
4	SAFW			OWN	-	-	-	-	-	-	-
				PRE	-	-	-	-	-	-	-
SS-CS	I700870		C-28A	ISI	-	-	-	-	-	-	-
SSF1.20B	SWU-606		GUIDE	AUG	-	-	-	-	-	-	-
4	SAFW			OWN	-	-	-	-	-	-	-
				PRE	-	-	-	-	-	-	-
SS-CS	I700900		C-17	ISI	-	-	-	-	-	-	-
SSF1.20B	SWU-642		GUIDE	AUG	-	-	-	-	-	-	-
4	SW			OWN	-	-	-	-	-	-	-
				PRE	-	-	-	-	-	-	-
SS-CS	I700910		C-17	ISI	-	-	-	-	-	-	-
SSF1.20B	SWU-639 (N749)		U-BOLT	AUG	-	-	-	-	-	-	-
4	SW			OWN	-	-	-	-	-	-	-
				PRE	-	-	-	-	-	-	-
SS-CS	I700170	OWN/VT/VT-106	A-23A	ISI	-	-	-	-	-	-	-
SSF1.20C	CVU-39		VARIABLE SPRING	AUG	-	-	-	-	-	-	-
4	CVCS-LTDN			OWN	-	-	-	s	-	-	-
				PRE	-	-	-	-	-	-	-
SS-CS	I700180	PSI/VT/VT-106	A-23A	ISI	-	-	-	-	-	-	-
SSF1.20C	CVU-40		VARIABLE SPRING	AUG	-	-	-	-	-	-	-
4	CVCS-LTDN			OWN	-	-	-	-	-	-	-
				PRE	-	-	-	s	-	-	-
SS-CS	I700190		B-14	ISI	-	-	-	-	-	-	-
SSF1.20C	FWU-40		MECHANICAL SNUBBER	AUG	-	-	-	-	-	-	-
Q	FW			OWN	-	-	-	-	-	-	-
				PRE	-	-	-	-	-	-	-
SS-CS	I700200	OWN/VT/VT-106	B-14	ISI	-	-	-	-	-	-	-
SSF1.20C	FWU-39		MECHANICAL SNUBBER & IA	AUG	-	-	-	-	-	-	-
Q	FW			OWN	-	-	-	s	-	-	-
				PRE	-	-	-	-	-	-	-
SS-CS	I700210		B-14	ISI	-	-	-	-	-	-	-
SSF1.20C	FWU-38		MECHANICAL SNUBBER	AUG	-	-	-	-	-	-	-
Q	FW			OWN	-	-	-	-	-	-	-
				PRE	-	-	-	-	-	-	-

Category, ItemNO, Class	Summary / CompID / System	Scope / Method / Procedure	Iso No. Comp. Desc. Code Case		Period 1 00	Period 1 02	Period 2 03	Period 2 05	Period 2 06	Period 3 08	Period 3 09
SS-CS	I700220		B-14	ISI	-	-	-	-	-	-	-
SSF1.20C	FWU-37		VARIABLE SPRING	AUG	-	-	-	-	-	-	-
Q	FW			OWN	-	-	-	-	-	-	-
				PRE	-	-	-	-	-	-	-
SS-CS	I700240		B-14	ISI	-	-	-	-	-	-	-
SSF1.20C	FWU-35		VARIABLE SPRING	AUG	-	-	-	-	-	-	-
Q	FW			OWN	-	-	-	-	-	-	-
				PRE	-	-	-	-	-	-	-
SS-CS	I700260		HE-5	ISI	-	-	-	-	-	-	-
SSF1.20C	FWU-33		HYDRAULIC SNUBBER	AUG	-	-	-	-	-	-	-
Q	FW			OWN	-	-	-	-	-	-	-
				PRE	-	-	-	-	-	-	-
SS-CS	I700270		HE-5	ISI	-	-	-	-	-	-	-
SSF1.20C	FWU-32		MECHANICAL SNUBBER	AUG	-	-	-	-	-	-	-
Q	FW			OWN	-	-	-	-	-	-	-
				PRE	-	-	-	-	-	-	-
SS-CS	I700280		HE-5	ISI	-	-	-	-	-	-	-
SSF1.20C	FWU-31		VARIABLE SPRING	AUG	-	-	-	-	-	-	-
Q	FW			OWN	-	-	-	-	-	-	-
				PRE	-	-	-	-	-	-	-
SS-CS	I700320		B-11	ISI	-	-	-	-	-	-	-
SSF1.20C	FWU-16		VARIABLE SPRING	AUG	-	-	-	-	-	-	-
Q	FW			OWN	-	-	-	-	-	-	-
				PRE	-	-	-	-	-	-	-
SS-CS	I700330		B-11	ISI	-	-	-	-	-	-	-
SSF1.20C	FWU-17		MECHANICAL SNUBBER	AUG	-	-	-	-	-	-	-
Q	FW			OWN	-	-	-	-	-	-	-
				PRE	-	-	-	-	-	-	-
SS-CS	I700340	OWN/VT/VT-106	B-11	ISI	-	-	-	-	-	-	-
SSF1.20C	FWU-18		MECHANICAL SNUBBER & IA	AUG	-	-	-	-	-	-	-
Q	FW			OWN	-	-	-	-	-	-	s
				PRE	-	-	-	-	-	-	-
SS-CS	I700350		B-11	ISI	-	-	-	-	-	-	-
SSF1.20C	FWU-19		VARIABLE SPRING	AUG	-	-	-	-	-	-	-
Q	FW			OWN	-	-	-	-	-	s	-
				PRE	-	-	-	-	-	-	-
SS-CS	I700360		HE-5	ISI	-	-	-	-	-	-	-
SSF1.20C	FWU-20		MECHANICAL SNUBBER	AUG	-	-	-	-	-	-	-
Q	FW			OWN	-	-	-	-	-	-	-
				PRE	-	-	-	-	-	-	-

Category, ItemNO, Class	Summary / CompID / System	Scope / Method / Procedure	Iso No. Comp. Desc. Code Case		Period 1 00	Period 1 02	Period 2 03	Period 2 05	Period 2 06	Period 3 08	Period 3 09
SS-CS	I700370		HE-5	ISI	-	-	-	-	-	-	-
SSF1.20C	FWU-21		HYDRAULIC SNUBBER & IA	AUG	-	-	-	-	-	-	-
Q	FW			OWN	-	-	-	-	-	-	-
				PRE	-	-	-	-	-	-	-
SS-CS	I700380		HE-5	ISI	-	-	-	-	-	-	-
SSF1.20C	FWU-22		VARIABLE SPRING	AUG	-	-	-	-	-	-	-
Q	FW			OWN	-	-	-	-	-	-	-
				PRE	-	-	-	-	-	-	-
SS-CS	I700390		HE-5	ISI	-	-	-	-	-	-	-
SSF1.20C	FWU-23		MECHANICAL SNUBBER	AUG	-	-	-	-	-	-	-
Q	FW			OWN	-	-	-	-	-	-	-
				PRE	-	-	-	-	-	-	-
SS-CS	I700400		HE-5	ISI	-	-	-	-	-	-	-
SSF1.20C	FWU-24		MECHANICAL SNUBBER	AUG	-	-	-	-	-	-	-
Q	FW			OWN	-	-	-	-	-	-	-
				PRE	-	-	-	-	-	-	-
SS-CS	I700410		HE-5	ISI	-	-	-	-	-	-	-
SSF1.20C	FWU-25		VARIABLE SPRING	AUG	-	-	-	-	-	-	-
Q	FW			OWN	-	-	-	-	-	-	-
				PRE	-	-	-	-	-	-	-
SS-CS	I700420		HE-5	ISI	-	-	-	-	-	-	-
SSF1.20C	FWU-26		MECHANICAL SNUBBER & IA	AUG	-	-	-	-	-	-	-
Q	FW			OWN	-	-	-	-	-	-	-
				PRE	-	-	-	-	-	-	-
SS-CS	I700460		B-9A	ISI	-	-	-	-	-	-	-
SSF1.20C	MSU-60		MECHANICAL SNUBBER	AUG	-	-	-	-	-	-	-
4	MS			OWN	-	-	-	-	-	-	-
				PRE	-	-	-	-	-	-	-
SS-CS	I700560		B-10	ISI	-	-	-	-	-	-	-
SSF1.20C	MSU-57		MECHANICAL SNUBBER	AUG	-	-	-	-	-	-	-
2	MS			OWN	-	-	-	-	-	-	-
				PRE	-	-	-	-	-	-	-
SS-CS	I700740		C-16	ISI	-	-	-	-	-	-	-
SSF1.20C	SWU-364		VARIABLE SPRING & IA	AUG	-	-	-	-	-	-	-
4	SW			OWN	-	-	-	-	-	-	-
				PRE	-	-	-	-	-	-	-

R. E. GINNA NUCLEAR POWER PLANT

FIRST INTERVAL (1997 to 2008) CONTAINMENT (IWE/IWL) INSERVICE INSPECTION PROGRAM PLAN

SUPPLEMENT 1, TABLE 2

Effective Date: November 30, 2004

Prepared By: Frank H Klepacki **Date:** 11/19/04

Approved By: [illegible] **Date:** 11-19-04

Record Category: 15.22.11

Category, ItemNO, Class	Summary / CompID / System	Scope / Method / Procedure	Iso No. Comp. Desc. Code Case		Period 1 97	Period 1 99	Period 1 00	Period 2 02	Period 2 03	Period 2 05	Period 3 06	Period 3 08
E-A	I900000	ISI/VT/VT-112		ISI	-	-	-	-	-	-	s	-
E1.11	DOME LINER	AUG/VT/VT-112	CONTAINMENT METAL DOME	AUG	-	c	-	-	B	-	-	-
MC	CONTAINMENT			OWN	-	-	-	-	-	-	-	-
				PRE	-	-	-	-	-	-	-	-
E-A	I900002	AUG/VT/VT-112		ISI	-	-	-	-	-	-	s	h
E1.11	SUMP A LINER	PSI/VT/VT-112	CONTAINMENT SUMP A LINER	AUG	-	-	-	-	c	b	-	-
MC	CONTAINMENT	AUG/VT/VT-112		OWN	-	-	-	-	-	-	-	-
		ISI//		PRE	-	-	-	-	c	-	-	-
E-A	I900006	AUG/VT/VT-112		ISI	-	-	-	-	-	-	s	-
E1.11	PEN. 29 TTL	ISI/VT/VT-112	PEN 29 TRANSFER TUBE LINER	AUG	-	p	c	-	B	-	-	-
MC	CONTAINMENT			OWN	-	-	-	-	-	-	-	-
				PRE	-	-	-	-	-	-	-	-
E-A	I900010	ISI/VT/VT-112		ISI	-	-	-	-	-	-	s	-
E1.11	PEN. 1 (IN & OUT)	AUG/VT/VT-112	PEN 1 SPARE	AUG	-	c	-	-	B	-	-	-
MC	MECHANICAL PEN.	AUG/VT/VT-112		OWN	-	-	-	-	-	-	-	-
				PRE	-	-	-	-	-	-	-	-
E-A	I900012	ISI/VT/VT-112		ISI	-	-	-	-	-	-	s	-
E1.11	PEN. 2	AUG/VT/VT-112	PEN 2 S/G INSPECTION / MAINTENANCE	AUG	-	c	-	-	B	-	-	-
MC	MECHANICAL PEN.	AUG/VT/VT-112		OWN	-	-	-	-	-	-	-	-
				PRE	-	-	-	-	-	-	-	-
E-A	I900014	ISI/VT/VT-112		ISI	-	-	-	-	-	-	s	-
E1.11	PEN. 29	AUG/VT/VT-112	PEN 29 FUEL TRANSFER TUBE	AUG	-	c	-	-	B	-	-	-
MC	MECHANICAL PEN.	AUG/VT/VT-112		OWN	-	-	-	-	-	-	-	-
				PRE	-	-	-	-	-	-	-	-
E-A	I900016	ISI/VT/VT-112		ISI	-	-	-	-	-	-	s	-
E1.11	PEN. 99 (IN & OUT)	AUG/VT/VT-112	PEN 99 SPARE	AUG	-	c	-	-	B	-	-	-
MC	MECHANICAL PEN.	AUG/VT/VT-112		OWN	-	-	-	-	-	-	-	-
				PRE	-	-	-	-	-	-	-	-
E-A	I900018	ISI/VT/VT-112		ISI	-	-	-	-	-	-	s	-
E1.11	PEN. 100	AUG/VT/VT-112	PEN 100 CHG LINE TO B LOOP	AUG	-	c	-	-	B	-	-	-
MC	MECHANICAL PEN.	AUG/VT/VT-112		OWN	-	-	-	-	-	-	-	-
				PRE	-	-	-	-	-	-	-	-
E-A	I900020	ISI/VT/VT-112		ISI	-	-	-	-	-	-	s	-
E1.11	PEN. 101	AUG/VT/VT-112	PEN 101 SI PUMP 1B DISCHARGE	AUG	-	c	-	-	B	-	-	-
MC	MECHANICAL PEN.	AUG/VT/VT-112		OWN	-	-	-	-	-	-	-	-
				PRE	-	-	-	-	-	-	-	-
E-A	I900022	ISI/VT/VT-112		ISI	-	-	-	-	-	-	s	-
E1.11	PEN. 102	AUG/VT/VT-112	PEN 102 ALT. CHG TO A COLD LEG	AUG	-	c	-	-	B	-	-	-
MC	MECHANICAL PEN.	AUG/VT/VT-112		OWN	-	-	-	-	-	-	-	-
				PRE	-	-	-	-	-	-	-	-

Category, ItemNO, Class	Summary / CompID / System	Scope / Method / Procedure	Iso No. Comp. Desc. Code Case		Period 1 97	Period 1 99	Period 1 00	Period 2 02	Period 2 03	Period 2 05	Period 3 06	Period 3 08
E-A	I900024	ISI/VT/VT-112		ISI	-	-	-	-	-	-	s	-
E1.11	PEN. 103 (IN & OUT)	AUG/VT/VT-112	PEN 103 CONST. FIRE SW CAP	AUG	-	c	-	-	B	-	-	-
MC	MECHANICAL PEN.	AUG/VT/VT-112		OWN	-	-	-	-	-	-	-	-
				PRE	-	-	-	-	-	-	-	-
E-A	I900026	ISI/VT/VT-112		ISI	-	-	-	-	-	-	s	-
E1.11	PEN. 104 (IN & OUT)	AUG/VT/VT-112	PEN 104 SPARE	AUG	-	c	-	-	B	-	-	-
MC	MECHANICAL PEN.	AUG/VT/VT-112		OWN	-	-	-	-	-	-	-	-
				PRE	-	-	-	-	-	-	-	-
E-A	I900028	ISI/VT/VT-112		ISI	-	-	-	-	-	-	s	-
E1.11	PEN. 105	AUG/VT/VT-112	PEN 105 CONT. SPRAY PUMP 1A	AUG	-	c	-	-	B	-	-	-
MC	MECHANICAL PEN.	AUG/VT/VT-112		OWN	-	-	-	-	-	-	-	-
				PRE	-	-	-	-	-	-	-	-
E-A	I900030	ISI/VT/VT-112		ISI	-	-	-	-	-	-	s	-
E1.11	PEN. 106	AUG/VT/VT-112	PEN 106 RCP A SW OUTLET	AUG	-	c	-	-	B	-	-	-
MC	MECHANICAL PEN.	AUG/VT/VT-112		OWN	-	-	-	-	-	-	-	-
				PRE	-	-	-	-	-	-	-	-
E-A	I900032	ISI/VT/VT-112		ISI	-	-	-	-	-	-	s	-
E1.11	PEN. 107	AUG/VT/VT-112	PEN 107 SUMP A DISCHG TO WASTE HOLDUP TANK	AUG	-	c	-	-	B	-	-	-
MC	MECHANICAL PEN.	AUG/VT/VT-112		OWN	-	-	-	-	-	-	-	-
				PRE	-	-	-	-	-	-	-	-
E-A	I900034	ISI/VT/VT-112		ISI	-	-	-	-	-	-	s	-
E1.11	PEN. 108	AUG/VT/VT-112	PEN 108 SEAL WATER RET. & EXCESS LTDWN	AUG	-	c	-	-	B	-	-	-
MC	MECHANICAL PEN.	AUG/VT/VT-112		OWN	-	-	-	-	-	-	-	-
				PRE	-	-	-	-	-	-	-	-
E-A	I900036	ISI/VT/VT-112		ISI	-	-	-	-	-	-	s	-
E1.11	PEN. 109	AUG/VT/VT-112	PEN 109 CS PUMP 1B	AUG	-	c	-	-	B	-	-	-
MC	MECHANICAL PEN.	AUG/VT/VT-112		OWN	-	-	-	-	-	-	-	-
				PRE	-	-	-	-	-	-	-	-
E-A	I900040	ISI/VT/VT-112		ISI	-	-	-	-	-	-	s	-
E1.11	PEN. 110	AUG/VT/VT-112	PEN 110 (110a & 110b)	AUG	-	c	-	-	B	-	-	-
MC	MECHANICAL PEN.	AUG/VT/VT-112		OWN	-	-	-	-	-	-	-	-
				PRE	-	-	-	-	-	-	-	-
E-A	I900042	ISI/VT/VT-112		ISI	-	-	-	-	-	-	s	-
E1.11	PEN. 111	AUG/VT/VT-112	PEN 111 RHR TO B COLD LEG	AUG	-	c	-	-	B	-	-	-
MC	MECHANICAL PEN.	AUG/VT/VT-112		OWN	-	-	-	-	-	-	-	-
				PRE	-	-	-	-	-	-	-	-
E-A	I900044	ISI/VT/VT-112		ISI	-	-	-	-	-	-	s	-
E1.11	PEN. 112	AUG/VT/VT-112	PEN 112 LETDOWN TO NON-REGEN HTEX	AUG	-	c	-	-	B	-	-	-
MC	MECHANICAL PEN.	AUG/VT/VT-112		OWN	-	-	-	-	-	-	-	-
				PRE	-	-	-	-	-	-	-	-

Category, ItemNO, Class	Summary / CompID / System	Scope / Method / Procedure	Iso No. Comp. Desc. Code Case		Period 1 97	Period 1 99	Period 1 00	Period 2 02	Period 2 03	Period 2 05	Period 3 06	Period 3 08
E-A	I900046	ISI/VT/VT-112		ISI	-	-	-	-	-	-	s	-
E1.11	PEN. 113	AUG/VT/VT-112	PEN 113 SI PUMP 1A DISCHRG	AUG	-	c	-	-	B	-	-	-
MC	MECHANICAL PEN.	AUG/VT/VT-112		OWN	-	-	-	-	-	-	-	-
				PRE	-	-	-	-	-	-	-	-
E-A	I900048	ISI/VT/VT-112		ISI	-	-	-	-	-	-	s	-
E1.11	PEN. 118 (IN & OUT)	AUG/VT/VT-112	PEN 118 SPARE	AUG	-	c	-	-	B	-	-	-
MC	MECHANICAL PEN.	AUG/VT/VT-112		OWN	-	-	-	-	-	-	-	-
				PRE	-	-	-	-	-	-	-	-
E-A	I900050	ISI/VT/VT-112		ISI	-	-	-	-	-	-	s	-
E1.11	PEN. 119	AUG/VT/VT-112	PEN 119 SAFW TO S/G 1A	AUG	-	c	-	-	B	-	-	-
MC	MECHANICAL PEN.	AUG/VT/VT-112		OWN	-	-	-	-	-	-	-	-
				PRE	-	-	-	-	-	-	-	-
E-A	I900052	ISI/VT/VT-112		ISI	-	-	-	-	-	-	s	-
E1.11	PEN. 120	AUG/VT/VT-112	PEN 120 (120a & 120b)	AUG	-	c	-	-	B	-	-	-
MC	MECHANICAL PEN.	AUG/VT/VT-112		OWN	-	-	-	-	-	-	-	-
				PRE	-	-	-	-	-	-	-	-
E-A	I900054	ISI/VT/VT-112		ISI	-	-	-	-	-	-	s	-
E1.11	PEN. 121	AUG/VT/VT-112	PEN 121 (121a, 121b, 121C)	AUG	-	c	-	-	B	-	-	-
MC	MECHANICAL PEN.	AUG/VT/VT-112		OWN	-	-	-	-	-	-	-	-
				PRE	-	-	-	-	-	-	-	-
E-A	I900056	ISI/VT/VT-112		ISI	-	-	-	-	-	-	s	-
E1.11	PEN. 123	AUG/VT/VT-112	PEN 123 (123a & 123b)	AUG	-	c	-	-	B	-	-	-
MC	MECHANICAL PEN.	AUG/VT/VT-112		OWN	-	-	-	-	-	-	-	-
				PRE	-	-	-	-	-	-	-	-
E-A	I900058	ISI/VT/VT-112		ISI	-	-	-	-	-	-	s	-
E1.11	PEN. 124	AUG/VT/VT-112	PEN 124 (124a, b, c & d)	AUG	-	c	-	-	B	-	-	-
MC	MECHANICAL PEN.	AUG/VT/VT-112		OWN	-	-	-	-	-	-	-	-
				PRE	-	-	-	-	-	-	-	-
E-A	I900060	ISI/VT/VT-112		ISI	-	-	-	-	-	-	s	-
E1.11	PEN. 125	AUG/VT/VT-112	PEN 125 CCW FROM RCP 1B	AUG	-	c	-	-	B	-	-	-
MC	MECHANICAL PEN.	AUG/VT/VT-112		OWN	-	-	-	-	-	-	-	-
				PRE	-	-	-	-	-	-	-	-
E-A	I900062	ISI/VT/VT-112		ISI	-	-	-	-	-	-	s	-
E1.11	PEN. 126	AUG/VT/VT-112	PEN 126 CCW FROM RCP 1A	AUG	-	c	-	-	B	-	-	-
MC	MECHANICAL PEN.	AUG/VT/VT-112		OWN	-	-	-	-	-	-	-	-
				PRE	-	-	-	-	-	-	-	-
E-A	I900064	ISI/VT/VT-112		ISI	-	-	-	-	-	-	s	-
E1.11	PEN. 127	AUG/VT/VT-112	PEN 127 CCW TO RCP 1A	AUG	-	c	-	-	B	-	-	-
MC	MECHANICAL PEN.	AUG/VT/VT-112		OWN	-	-	-	-	-	-	-	-
				PRE	-	-	-	-	-	-	-	-

Category, ItemNO, Class	Summary / CompID / System	Scope / Method / Procedure	Iso No. Comp. Desc. Code Case		Period 1 97	Period 1 99	Period 1 00	Period 2 02	Period 2 03	Period 2 05	Period 3 06	Period 3 08
E-A	I900066	ISI/VT/VT-112		ISI	-	-	-	-	-	-	s	-
E1.11	PEN. 128	AUG/VT/VT-112	PEN 128 CCW TO RCP 1B	AUG	-	c	-	-	B	-	-	-
MC	MECHANICAL PEN.	AUG/VT/VT-112		OWN	-	-	-	-	-	-	-	-
				PRE	-	-	-	-	-	-	-	-
E-A	I900068	ISI/VT/VT-112		ISI	-	-	-	-	-	-	s	-
E1.11	PEN. 129	AUG/VT/VT-112	PEN 129 RC DRAIN TK, PR TK TO CONT. VENT	AUG	-	c	-	-	B	-	-	-
MC	MECHANICAL PEN.	AUG/VT/VT-112		OWN	-	-	-	-	-	-	-	-
				PRE	-	-	-	-	-	-	-	-
E-A	I900070	ISI/VT/VT-112		ISI	-	-	-	-	-	-	s	-
E1.11	PEN. 130	AUG/VT/VT-112	PEN 130 CCW FM REACTOR SUP. COOL	AUG	-	c	-	-	B	-	-	-
MC	MECHANICAL PEN.	AUG/VT/VT-112		OWN	-	-	-	-	-	-	-	-
				PRE	-	-	-	-	-	-	-	-
E-A	I900072	ISI/VT/VT-112		ISI	-	-	-	-	-	-	s	-
E1.11	PEN. 131	AUG/VT/VT-112	PEN 131 CCW TO REACTOR SUP. COOL	AUG	-	c	-	-	B	-	-	-
MC	MECHANICAL PEN.	AUG/VT/VT-112		OWN	-	-	-	-	-	-	-	-
				PRE	-	-	-	-	-	-	-	-
E-A	I900074	ISI/VT/VT-112		ISI	-	-	-	-	-	-	s	-
E1.11	PEN. 132	AUG/VT/VT-112	PEN 132 CONT. MINI-PURGE EX.	AUG	-	c	-	-	B	-	-	-
MC	MECHANICAL PEN.	AUG/VT/VT-112		OWN	-	-	-	-	-	-	-	-
				PRE	-	-	-	-	-	-	-	-
E-A	I900076	ISI/VT/VT-112		ISI	-	-	-	-	-	-	s	-
E1.11	PEN. 133 (IN & OUT)	AUG/VT/VT-112	PEN 133 SPARE	AUG	-	c	-	-	B	-	-	-
MC	MECHANICAL PEN.	AUG/VT/VT-112		OWN	-	-	-	-	-	-	-	-
				PRE	-	-	-	-	-	-	-	-
E-A	I900078	ISI/VT/VT-112		ISI	-	-	-	-	-	-	s	-
E1.11	PEN. 140	AUG/VT/VT-112	PEN 140 RHR PUMP SUCTION FM A HOT LEG	AUG	-	c	-	-	B	-	-	-
MC	MECHANICAL PEN.	AUG/VT/VT-112		OWN	-	-	-	-	-	-	-	-
				PRE	-	-	-	-	-	-	-	-
E-A	I900086	ISI/VT/VT-112		ISI	-	-	-	-	-	-	s	-
E1.11	PEN. 201	AUG/VT/VT-112	PEN 201 (201a & 201b)	AUG	-	c	-	-	B	-	-	-
MC	MECHANICAL PEN.	AUG/VT/VT-112		OWN	-	-	-	-	-	-	-	-
				PRE	-	-	-	-	-	-	-	-
E-A	I900088	ISI/VT/VT-112		ISI	-	-	-	-	-	-	s	-
E1.11	PEN. 202	AUG/VT/VT-112	PEN 202 (202a & 202b)	AUG	-	c	-	-	B	-	-	-
MC	MECHANICAL PEN.	AUG/VT/VT-112		OWN	-	-	-	-	-	-	-	-
		AUG/VT/VT-112		PRE	-	-	-	-	-	-	-	-
E-A	I900090	ISI/VT/VT-112		ISI	-	-	-	-	-	-	s	-
E1.11	PEN. 203	AUG/VT/VT-112	PEN 203 (203a, b, c)	AUG	-	c	-	-	B	-	-	-
MC	MECHANICAL PEN.	AUG/VT/VT-112		OWN	-	-	-	-	-	-	-	-
				PRE	-	-	-	-	-	-	-	-

Category, ItemNO, Class	Summary / CompID / System	Scope / Method / Procedure	Iso No. Comp. Desc. Code Case		Period 1 97	Period 1 99	Period 1 00	Period 2 02	Period 2 03	Period 2 05	Period 3 06	Period 3 08
E-A	I900092	ISI/VT/VT-112		ISI	-	-	-	-	-	-	s	-
E1.11	PEN. 204	AUG/VT/VT-112	PEN 204 PURGE SUPPLY DUCT	AUG	-	c	-	-	B	-	-	-
MC	MECHANICAL PEN.	AUG/VT/VT-112		OWN	-	-	-	-	-	-	-	-
				PRE	-	-	-	-	-	-	-	-
E-A	I900094	ISI/VT/VT-112		ISI	-	-	-	-	-	-	s	-
E1.11	PEN. 205	AUG/VT/VT-112	PEN 205 LOOP B HOT LEG SAMPLE	AUG	-	c	-	-	B	-	-	-
MC	MECHANICAL PEN.	AUG/VT/VT-112		OWN	-	-	-	-	-	-	-	-
				PRE	-	-	-	-	-	-	-	-
E-A	I900096	ISI/VT/VT-112		ISI	-	-	-	-	-	-	s	-
E1.11	PEN. 206	AUG/VT/VT-112	PEN 206 (206a & 206b)	AUG	-	c	-	-	B	-	-	-
MC	MECHANICAL PEN.	AUG/VT/VT-112		OWN	-	-	-	-	-	-	-	-
				PRE	-	-	-	-	-	-	-	-
E-A	I900098	ISI/VT/VT-112		ISI	-	-	-	-	-	-	s	-
E1.11	PEN. 207	AUG/VT/VT-112	PEN 207 (207a & 207b)	AUG	-	c	-	-	B	-	-	-
MC	MECHANICAL PEN.	AUG/VT/VT-112		OWN	-	-	-	-	-	-	-	-
				PRE	-	-	-	-	-	-	-	-
E-A	I900100	ISI/VT/VT-112		ISI	-	-	-	-	-	-	s	-
E1.11	PEN. 209	AUG/VT/VT-112	PEN 209 (209a & 209b)	AUG	-	c	-	-	B	-	-	-
MC	MECHANICAL PEN.	AUG/VT/VT-112		OWN	-	-	-	-	-	-	-	-
				PRE	-	-	-	-	-	-	-	-
E-A	I900102	ISI/VT/VT-112		ISI	-	-	-	-	-	-	s	-
E1.11	PEN. 210	AUG/VT/VT-112	PEN 210 OZ MAKE UP TO A & B RECOMBINERS	AUG	-	c	-	-	B	-	-	-
MC	MECHANICAL PEN.	AUG/VT/VT-112		OWN	-	-	-	-	-	-	-	-
				PRE	-	-	-	-	-	-	-	-
E-A	I900104	ISI/VT/VT-112		ISI	-	-	-	-	-	-	s	-
E1.11	PEN. 300	AUG/VT/VT-112	PEN 300 PURGE EXHAUST DUCT	AUG	-	c	-	-	B	-	-	-
MC	MECHANICAL PEN.	AUG/VT/VT-112		OWN	-	-	-	-	-	-	-	-
				PRE	-	-	-	-	-	-	-	-
E-A	I900106	ISI/VT/VT-112		ISI	-	-	-	-	-	-	s	-
E1.11	PEN. 301 (IN & OUT)	AUG/VT/VT-112	PEN 301 AUX STEAM SUP TO CONT.	AUG	-	c	-	-	B	-	-	-
MC	MECHANICAL PEN.	AUG/VT/VT-112		OWN	-	-	-	-	-	-	-	-
				PRE	-	-	-	-	-	-	-	-
E-A	I900108	ISI/VT/VT-112		ISI	-	-	-	-	-	-	s	-
E1.11	PEN. 303 (IN & OUT)	AUG/VT/VT-112	PEN 303 AUX STEAM COND. RETURN	AUG	-	c	-	-	B	-	-	-
MC	MECHANICAL PEN.	AUG/VT/VT-112		OWN	-	-	-	-	-	-	-	-
				PRE	-	-	-	-	-	-	-	-
E-A	I900110	ISI/VT/VT-112		ISI	-	-	-	-	-	-	s	-
E1.11	PEN. 304	AUG/VT/VT-112	PEN 304 (304a & 304b)	AUG	-	c	-	-	B	-	-	-
MC	MECHANICAL PEN.	AUG/VT/VT-112		OWN	-	-	-	-	-	-	-	-
				PRE	-	-	-	-	-	-	-	-

Category, ItemNO, Class	Summary / CompID / System	Scope / Method / Procedure	Iso No. Comp. Desc. Code Case		Period 1 97	Period 1 99	Period 1 00	Period 2 02	Period 2 03	Period 2 05	Period 3 06	Period 3 08
E-A	I900112	ISI/VT/VT-112		ISI	-	-	-	-	-	-	s	-
E1.11	PEN. 305	AUG/VT/VT-112	PEN 305 (305a, b, c, d, e)	AUG	-	c	-	-	B	-	-	-
MC	MECHANICAL PEN.	AUG/VT/VT-112		OWN	-	-	-	-	-	-	-	-
				PRE	-	-	-	-	-	-	-	-
E-A	I900114	ISI/VT/VT-112		ISI	-	-	-	-	-	-	s	-
E1.11	PEN. 306 (IN & OUT)	AUG/VT/VT-112	PEN 306 SPARE	AUG	-	c	-	-	B	-	-	-
MC	MECHANICAL PEN.	AUG/VT/VT-112		OWN	-	-	-	-	-	-	-	-
				PRE	-	-	-	-	-	-	-	-
E-A	I900116	ISI/VT/VT-112		ISI	-	-	-	-	-	-	s	-
E1.11	PEN. 307	AUG/VT/VT-112	PEN 307 FIRE SERVICE WATER	AUG	-	c	-	-	B	-	-	-
MC	MECHANICAL PEN.	AUG/VT/VT-112		OWN	-	-	-	-	-	-	-	-
				PRE	-	-	-	-	-	-	-	-
E-A	I900118	ISI/VT/VT-112		ISI	-	-	-	-	-	-	s	-
E1.11	PEN. 308	AUG/VT/VT-112	PEN 308 SW FROM A FAN COOLER	AUG	-	c	-	-	B	-	-	-
MC	MECHANICAL PEN.	AUG/VT/VT-112		OWN	-	-	-	-	-	-	-	-
				PRE	-	-	-	-	-	-	-	-
E-A	I900120	ISI/VT/VT-112		ISI	-	-	-	-	-	-	s	-
E1.11	PEN. 309	AUG/VT/VT-112	PEN 309 MINI-PURGE SUPPLY	AUG	-	c	-	-	B	-	-	-
MC	MECHANICAL PEN.	AUG/VT/VT-112		OWN	-	-	-	-	-	-	-	-
				PRE	-	-	-	-	-	-	-	-
E-A	I900122	ISI/VT/VT-112		ISI	-	-	-	-	-	-	s	-
E1.11	PEN. 310	AUG/VT/VT-112	PEN 310 (310a & 310b)	AUG	-	c	-	-	B	-	-	-
MC	MECHANICAL PEN.	AUG/VT/VT-112		OWN	-	-	-	-	-	-	-	-
				PRE	-	-	-	-	-	-	-	-
E-A	I900124	ISI/VT/VT-112		ISI	-	-	-	-	-	-	s	-
E1.11	PEN. 311	AUG/VT/VT-112	PEN 311 SW FROM B FAN COOLER	AUG	-	c	-	-	B	-	-	-
MC	MECHANICAL PEN.	AUG/VT/VT-112		OWN	-	-	-	-	-	-	-	-
				PRE	-	-	-	-	-	-	-	-
E-A	I900126	ISI/VT/VT-112		ISI	-	-	-	-	-	-	s	-
E1.11	PEN. 312	AUG/VT/VT-112	PEN 312 SW TO D FAN COOLER	AUG	-	c	-	-	B	-	-	-
MC	MECHANICAL PEN.	AUG/VT/VT-112		OWN	-	-	-	-	-	-	-	-
				PRE	-	-	-	-	-	-	-	-
E-A	I900128	ISI/VT/VT-112		ISI	-	-	-	-	-	-	s	-
E1.11	PEN. 313	AUG/VT/VT-112	PEN 313 LEAKAGE TEST DEPRESSURIZATION	AUG	-	c	-	-	B	-	-	-
MC	MECHANICAL PEN.	AUG/VT/VT-112		OWN	-	-	-	-	-	-	-	-
				PRE	-	-	-	-	-	-	-	-
E-A	I900130	ISI/VT/VT-112		ISI	-	-	-	-	-	-	s	-
E1.11	PEN. 315	AUG/VT/VT-112	PEN 315 SW FROM C FAN COOLER	AUG	-	c	-	-	B	-	-	-
MC	MECHANICAL PEN.	AUG/VT/VT-112		OWN	-	-	-	-	-	-	-	-
				PRE	-	-	-	-	-	-	-	-

Category, ItemNO, Class	Summary / CompID / System	Scope / Method / Procedure	Iso No. Comp. Desc. Code Case		Period 1 97	Period 1 99	Period 1 00	Period 2 02	Period 2 03	Period 2 05	Period 3 06	Period 3 08
E-A	I900132	ISI/VT/VT-112		ISI	-	-	-	-	-	-	s	-
E1.11	PEN. 316	AUG/VT/VT-112	PEN 316 SW TO B FAN COOLER	AUG	-	c	-	-	B	-	-	-
MC	MECHANICAL PEN.	AUG/VT/VT-112		OWN	-	-	-	-	-	-	-	-
				PRE	-	-	-	-	-	-	-	-
E-A	I900134	ISI/VT/VT-112		ISI	-	-	-	-	-	-	s	-
E1.11	PEN. 317	AUG/VT/VT-112	PEN 317 LEAKAGE TEST SUPPLY	AUG	-	c	-	-	B	-	-	-
MC	MECHANICAL PEN.	AUG/VT/VT-112		OWN	-	-	-	-	-	-	-	-
		AUG/VT/VT-112		PRE	-	-	-	-	-	-	-	-
E-A	I900136	ISI/VT/VT-112		ISI	-	-	-	-	-	-	s	-
E1.11	PEN. 318 (IN & OUT)	AUG/VT/VT-112	PEN 318 DEAD WEIGHT TESTER	AUG	-	c	-	-	B	-	-	-
MC	MECHANICAL PEN.	AUG/VT/VT-112		OWN	-	-	-	-	-	-	-	-
				PRE	-	-	-	-	-	-	-	-
E-A	I900138	ISI/VT/VT-112		ISI	-	-	-	-	-	-	s	-
E1.11	PEN. 319	AUG/VT/VT-112	PEN 319 SW TO A FAN COOLER	AUG	-	c	-	-	B	-	-	-
MC	MECHANICAL PEN.	AUG/VT/VT-112		OWN	-	-	-	-	-	-	-	-
				PRE	-	-	-	-	-	-	-	-
E-A	I900140	ISI/VT/VT-112		ISI	-	-	-	-	-	-	s	-
E1.11	PEN. 320	AUG/VT/VT-112	PEN 320 SW TO C FAN COOLER	AUG	-	c	-	-	B	-	-	-
MC	MECHANICAL PEN.	AUG/VT/VT-112		OWN	-	-	-	-	-	-	-	-
				PRE	-	-	-	-	-	-	-	-
E-A	I900142	ISI/VT/VT-112		ISI	-	-	-	-	-	-	s	-
E1.11	PEN. 321	AUG/VT/VT-112	PEN 321 A S/G BLOWDOWN	AUG	-	c	-	-	B	-	-	-
MC	MECHANICAL PEN.	AUG/VT/VT-112		OWN	-	-	-	-	-	-	-	-
				PRE	-	-	-	-	-	-	-	-
E-A	I900144	ISI/VT/VT-112		ISI	-	-	-	-	-	-	s	-
E1.11	PEN. 322	AUG/VT/VT-112	PEN 322 B S/G BLOWDOWN	AUG	-	c	-	-	B	-	-	-
MC	MECHANICAL PEN.	AUG/VT/VT-112		OWN	-	-	-	-	-	-	-	-
				PRE	-	-	-	-	-	-	-	-
E-A	I900146	ISI/VT/VT-112		ISI	-	-	-	-	-	-	s	-
E1.11	PEN. 323	AUG/VT/VT-112	PEN 323 SW FM D FAN COOLER	AUG	-	c	-	-	B	-	-	-
MC	MECHANICAL PEN.	AUG/VT/VT-112		OWN	-	-	-	-	-	-	-	-
				PRE	-	-	-	-	-	-	-	-
E-A	I900148	ISI/VT/VT-112		ISI	-	-	-	-	-	-	s	-
E1.11	PEN. 324	AUG/VT/VT-112	PEN 324 DEMIN WATER TO CONTAINMENT	AUG	-	c	-	-	B	-	-	-
MC	MECHANICAL PEN.	AUG/VT/VT-112		OWN	-	-	-	-	-	-	-	-
				PRE	-	-	-	-	-	-	-	-
E-A	I900150	ISI/VT/VT-112		ISI	-	-	-	-	-	-	s	-
E1.11	PEN. 325	AUG/VT/VT-112	PEN 325 DEMIN WATER CLEANUP	AUG	-	c	-	-	B	-	-	-
MC	MECHANICAL PEN.	AUG/VT/VT-112		OWN	-	-	-	-	-	-	-	-
				PRE	-	-	-	-	-	-	-	-

Category, ItemNO, Class	Summary / CompID / System	Scope / Method / Procedure	Iso No. Comp. Desc. Code Case		Period 1 97	Period 1 99	Period 1 00	Period 2 02	Period 2 03	Period 2 05	Period 3 06	Period 3 08
E-A	I900152	ISI/VT/VT-112		ISI	-	-	-	-	-	-	s	-
E1.11	PEN. 326 (IN & OUT)	AUG/VT/VT-112	PEN 326 SPARE	AUG	-	c	-	-	B	-	-	-
MC	MECHANICAL PEN.	AUG/VT/VT-112		OWN	-	-	-	-	-	-	-	-
				PRE	-	-	-	-	-	-	-	-
E-A	I900154	ISI/VT/VT-112		ISI	-	-	-	-	-	-	s	-
E1.11	PEN. 332	AUG/VT/VT-112	PEN 332 (332a, b, c, d)	AUG	-	c	-	-	B	-	-	-
MC	MECHANICAL PEN.	AUG/VT/VT-112		OWN	-	-	-	-	-	-	-	-
				PRE	-	-	-	-	-	-	-	-
E-A	I900156	ISI/VT/VT-112		ISI	-	-	-	-	-	-	s	-
E1.11	PEN. 336 (IN & OUT)	AUG/VT/VT-112	PEN 336 SPARE	AUG	-	c	-	-	B	-	-	-
MC	MECHANICAL PEN.	AUG/VT/VT-112		OWN	-	-	-	-	-	-	-	-
				PRE	-	-	-	-	-	-	-	-
E-A	I900158	AUG/VT/VT-112		ISI	-	-	-	-	-	-	s	-
E1.11	PEN. 401	AUG/VT/VT-112	PEN 401 MS FM A S/G	AUG	-	p	c	-	B	-	-	-
MC	MECHANICAL PEN.			OWN	-	-	-	-	-	-	-	-
				PRE	-	-	-	-	-	-	-	-
E-A	I900160	AUG/VT/VT-112		ISI	-	-	-	-	-	-	s	-
E1.11	PEN. 402	AUG/VT/VT-112	PEN 402 MS FM B S/G	AUG	-	r	c	-	B	-	-	-
MC	MECHANICAL PEN.			OWN	-	-	-	-	-	-	-	-
				PRE	-	-	-	-	-	-	-	-
E-A	I900162	AUG/VT/VT-112		ISI	-	-	-	-	-	-	s	-
E1.11	PEN. 403	AUG/VT/VT-112	PEN 403 FW LINETO A S/G	AUG	-	p	c	-	B	-	-	-
MC	MECHANICAL PEN.			OWN	-	-	-	-	-	-	-	-
				PRE	-	-	-	-	-	-	-	-
E-A	I900164	AUG/VT/VT-112		ISI	-	-	-	-	-	-	s	-
E1.11	PEN. 404	AUG/VT/VT-112	PEN 404 FW LINE TO B S/G	AUG	-	p	c	-	B	-	-	-
MC	MECHANICAL PEN.			OWN	-	-	-	-	-	-	-	-
				PRE	-	-	-	-	-	-	-	-
E-A	I900166	ISI/VT/VT-112		ISI	-	-	-	-	-	-	s	-
E1.11	PEN. 1000 (IN & OUT)	AUG/VT/VT-112	PEN 1000 PERSONNEL HATCH	AUG	-	c	-	-	p	-	-	-
MC	MECHANICAL PEN.			OWN	-	-	-	-	-	-	-	-
				PRE	-	-	-	-	-	-	-	-
E-A	I900168	ISI/VT/VT-112		ISI	-	-	-	-	-	-	s	-
E1.11	PEN. 2000 (IN & OUT)	AUG/VT/VT-112	PEN 2000 EQUIPMENT HATCH	AUG	-	c	-	-	B	-	-	-
MC	MECHANICAL PEN.	AUG/VT/VT-112		OWN	-	-	-	-	-	-	-	-
				PRE	-	-	-	-	-	-	-	-
E-A	I900170	ISI/VT/VT-112		ISI	-	-	-	-	-	-	s	-
E1.11	PEN. AE1	AUG/VT/VT-112	PEN AE1 ELECTRICAL PEN.	AUG	-	c	-	-	B	-	-	-
MC	ELECTRICAL PEN.	AUG/VT/VT-112		OWN	-	-	-	-	-	-	-	-
				PRE	-	-	-	-	-	-	-	-

Category, ItemNO, Class	Summary / CompID / System	Scope / Method / Procedure	Iso No. Comp. Desc. Code Case		Period 1 97	Period 1 99	Period 1 00	Period 2 02	Period 2 03	Period 2 05	Period 3 06	Period 3 08
E-A	I900172	ISI/VT/VT-112		ISI	-	-	-	-	-	-	s	-
E1.11	PEN. AE2	AUG/VT/VT-112	PEN AE2 ELECTRICAL PEN.	AUG	-	c	-	-	B	-	-	-
MC	ELECTRICAL PEN.	AUG/VT/VT-112		OWN	-	-	-	-	-	-	-	-
				PRE	-	-	-	-	-	-	-	-
E-A	I900174	ISI/VT/VT-112		ISI	-	-	-	-	-	-	s	-
E1.11	PEN. AE3	AUG/VT/VT-112	PEN AE3 ELECTRICAL PEN.	AUG	-	c	-	-	B	-	-	-
MC	ELECTRICAL PEN.	AUG/VT/VT-112		OWN	-	-	-	-	-	-	-	-
				PRE	-	-	-	-	-	-	-	-
E-A	I900176	ISI/VT/VT-112		ISI	-	-	-	-	-	-	s	-
E1.11	PEN. AE4	AUG/VT/VT-112	PEN AE4 ELECTRICAL PEN.	AUG	-	c	-	-	B	-	-	-
MC	ELECTRICAL PEN.	AUG/VT/VT-112		OWN	-	-	-	-	-	-	-	-
				PRE	-	-	-	-	-	-	-	-
E-A	I900178	ISI/VT/VT-112		ISI	-	-	-	-	-	-	s	-
E1.11	PEN. AE5	AUG/VT/VT-112	PEN AE5 ELECTRICAL PEN.	AUG	-	c	-	-	B	-	-	-
MC	ELECTRICAL PEN.	AUG/VT/VT-112		OWN	-	-	-	-	-	-	-	-
				PRE	-	-	-	-	-	-	-	-
E-A	I900180	ISI/VT/VT-112		ISI	-	-	-	-	-	-	s	-
E1.11	PEN. AE6	AUG/VT/VT-112	PEN AE6 ELECTRICAL PEN.	AUG	-	c	-	-	B	-	-	-
MC	ELECTRICAL PEN.	AUG/VT/VT-112		OWN	-	-	-	-	-	-	-	-
				PRE	-	-	-	-	-	-	-	-
E-A	I900182	ISI/VT/VT-112		ISI	-	-	-	-	-	-	s	-
E1.11	PEN. AE7	AUG/VT/VT-112	PEN AE7 ELECTRICAL PEN.	AUG	-	c	-	-	B	-	-	-
MC	ELECTRICAL PEN.	AUG/VT/VT-112		OWN	-	-	-	-	-	-	-	-
				PRE	-	-	-	-	-	-	-	-
E-A	I900184	ISI/VT/VT-112		ISI	-	-	-	-	-	-	s	-
E1.11	PEN. AE8	AUG/VT/VT-112	PEN AE8 ELECTRICAL PEN.	AUG	-	c	-	-	B	-	-	-
MC	ELECTRICAL PEN.	AUG/VT/VT-112		OWN	-	-	-	-	-	-	-	-
				PRE	-	-	-	-	-	-	-	-
E-A	I900186	ISI/VT/VT-112		ISI	-	-	-	-	-	-	s	-
E1.11	PEN. AE9	AUG/VT/VT-112	PEN AE9 ELECTRICAL PEN.	AUG	-	c	-	-	B	-	-	-
MC	ELECTRICAL PEN.	AUG/VT/VT-112		OWN	-	-	-	-	-	-	-	-
				PRE	-	-	-	-	-	-	-	-
E-A	I900188	ISI/VT/VT-112		ISI	-	-	-	-	-	-	s	-
E1.11	PEN. AE10	AUG/VT/VT-112	PEN AE10 ELECTRICAL PEN.	AUG	-	c	-	-	B	-	-	-
MC	ELECTRICAL PEN.	AUG/VT/VT-112		OWN	-	-	-	-	-	-	-	-
				PRE	-	-	-	-	-	-	-	-
E-A	I900190	ISI/VT/VT-112		ISI	-	-	-	-	-	-	s	-
E1.11	PEN. AE11	AUG/VT/VT-112	PEN AE11 ELECTRICAL PEN.	AUG	-	c	-	-	B	-	-	-
MC	ELECTRICAL PEN.	AUG/VT/VT-112		OWN	-	-	-	-	-	-	-	-
				PRE	-	-	-	-	-	-	-	-

Category, ItemNO, Class	Summary / CompID / System	Scope / Method / Procedure	Iso No. Comp. Desc. Code Case		Period 1 97	Period 1 99	Period 1 00	Period 2 02	Period 2 03	Period 2 05	Period 3 06	Period 3 08
E-A	I900192	ISI/VT/VT-112		ISI	-	-	-	-	-	-	s	-
E1.11	PEN. AE12	AUG/VT/VT-112	PEN AE12 ELECTRICAL PEN.	AUG	-	c	-	-	B	-	-	-
MC	ELECTRICAL PEN.	AUG/VT/VT-112		OWN	-	-	-	-	-	-	-	-
				PRE	-	-	-	-	-	-	-	-
E-A	I900194	ISI/VT/VT-112		ISI	-	-	-	-	-	-	s	-
E1.11	PEN. AE13	AUG/VT/VT-112	PEN AE13 ELECTRICAL PEN.	AUG	-	c	-	-	B	-	-	-
MC	ELECTRICAL PEN.	AUG/VT/VT-112		OWN	-	-	-	-	-	-	-	-
				PRE	-	-	-	-	-	-	-	-
E-A	I900196	ISI/VT/VT-112		ISI	-	-	-	-	-	-	s	-
E1.11	PEN. AE14	AUG/VT/VT-112	PEN AE14 ELECTRICAL PEN.	AUG	-	c	-	-	B	-	-	-
MC	ELECTRICAL PEN.	AUG/VT/VT-112		OWN	-	-	-	-	-	-	-	-
				PRE	-	-	-	-	-	-	-	-
E-A	I900198	ISI/VT/VT-112		ISI	-	-	-	-	-	-	s	-
E1.11	PEN. BE1	AUG/VT/VT-112	PEN BE1 ELECTRICAL PEN.	AUG	-	c	-	-	B	-	-	-
MC	ELECTRICAL PEN.	AUG/VT/VT-112		OWN	-	-	-	-	-	-	-	-
				PRE	-	-	-	-	-	-	-	-
E-A	I900200	ISI/VT/VT-112		ISI	-	-	-	-	-	-	s	-
E1.11	PEN. BE2	AUG/VT/VT-112	PEN BE2 ELECTRICAL PEN	AUG	-	c	-	-	B	-	-	-
MC	ELECTRICAL PEN.	AUG/VT/VT-112		OWN	-	-	-	-	-	-	-	-
				PRE	-	-	-	-	-	-	-	-
E-A	I900202	ISI/VT/VT-112		ISI	-	-	-	-	-	-	s	-
E1.11	PEN. BE3	AUG/VT/VT-112	PEN BE3 ELECTRICAL PEN.	AUG	-	c	-	-	B	-	-	-
MC	ELECTRICAL PEN.	AUG/VT/VT-112		OWN	-	-	-	-	-	-	-	-
				PRE	-	-	-	-	-	-	-	-
E-A	I900204	ISI/VT/VT-112		ISI	-	-	-	-	-	-	s	-
E1.11	PEN. BE4	AUG/VT/VT-112	PEN BE4 ELECTRICAL PEN.	AUG	-	c	-	-	B	-	-	-
MC	ELECTRICAL PEN.	AUG/VT/VT-112		OWN	-	-	-	-	-	-	-	-
				PRE	-	-	-	-	-	-	-	-
E-A	I900206	ISI/VT/VT-112		ISI	-	-	-	-	-	-	s	-
E1.11	PEN. CE1	AUG/VT/VT-112	PEN CE1 ELECTRICAL PEN.	AUG	-	c	-	-	B	-	-	-
MC	ELECTRICAL PEN.	AUG/VT/VT-112		OWN	-	-	-	-	-	-	-	-
				PRE	-	-	-	-	-	-	-	-
E-A	I900208	ISI/VT/VT-112		ISI	-	-	-	-	-	-	s	-
E1.11	PEN. CE2	AUG/VT/VT-112	PEN CE2 ELECTRICAL PEN.	AUG	-	c	-	-	B	-	-	-
MC	ELECTRICAL PEN.	AUG/VT/VT-112		OWN	-	-	-	-	-	-	-	-
				PRE	-	-	-	-	-	-	-	-
E-A	I900210	ISI/VT/VT-112		ISI	-	-	-	-	-	-	s	-
E1.11	PEN. CE3	AUG/VT/VT-112	PEN CE3 ELECTRICAL PEN.	AUG	-	c	-	-	B	-	-	-
MC	ELECTRICAL PEN.	AUG/VT/VT-112		OWN	-	-	-	-	-	-	-	-
				PRE	-	-	-	-	-	-	-	-

Category, ItemNO, Class	Summary / CompID / System	Scope / Method / Procedure	Iso No. Comp. Desc. Code Case		Period 1 97	Period 1 99	Period 1 00	Period 2 02	Period 2 03	Period 2 05	Period 3 06	Period 3 08
E-A	I900212	ISI/VT/VT-112		ISI	-	-	-	-	-	-	s	-
E1.11	PEN. CE4	AUG/VT/VT-112	PEN CE4 ELECTRICAL PEN.	AUG	-	c	-	-	B	-	-	-
MC	ELECTRICAL PEN.	AUG/VT/VT-112		OWN	-	-	-	-	-	-	-	-
				PRE	-	-	-	-	-	-	-	-
E-A	I900214	ISI/VT/VT-112		ISI	-	-	-	-	-	-	s	-
E1.11	PEN. CE5	AUG/VT/VT-112	PEN CE5 ELECTRICAL PEN	AUG	-	c	-	-	B	-	-	-
MC	ELECTRICAL PEN.	AUG/VT/VT-112		OWN	-	-	-	-	-	-	-	-
				PRE	-	-	-	-	-	-	-	-
E-A	I900216	ISI/VT/VT-112		ISI	-	-	-	-	-	-	s	-
E1.11	PEN. CE6	AUG/VT/VT-112	PEN CE6 ELECTRICAL PEN.	AUG	-	c	-	-	B	-	-	-
MC	ELECTRICAL PEN.	AUG/VT/VT-112		OWN	-	-	-	-	-	-	-	-
				PRE	-	-	-	-	-	-	-	-
E-A	I900218	ISI/VT/VT-112		ISI	-	-	-	-	-	-	s	-
E1.11	PEN. CE7	AUG/VT/VT-112	PEN CE7 ELECTRICAL PEN.	AUG	-	c	-	-	B	-	-	-
MC	ELECTRICAL PEN.	AUG/VT/VT-112		OWN	-	-	-	-	-	-	-	-
				PRE	-	-	-	-	-	-	-	-
E-A	I900220	ISI/VT/VT-112		ISI	-	-	-	-	-	-	s	-
E1.11	PEN. CE8	AUG/VT/VT-112	PEN CE8 ELECTRICAL PEN.	AUG	-	c	-	-	B	-	-	-
MC	ELECTRICAL PEN.	AUG/VT/VT-112		OWN	-	-	-	-	-	-	-	-
				PRE	-	-	-	-	-	-	-	-
E-A	I900222	ISI/VT/VT-112		ISI	-	-	-	-	-	-	s	-
E1.11	PEN. CE9	AUG/VT/VT-112	PEN CE9 ELECTRICAL PEN.	AUG	-	c	-	-	p	b	-	-
MC	ELECTRICAL PEN.	AUG/VT/VT-112		OWN	-	-	-	-	-	-	-	-
				PRE	-	-	-	-	-	-	-	-
E-A	I900224	ISI/VT/VT-112		ISI	-	-	-	-	-	-	s	-
E1.11	PEN. CE10 (IN & OUT)	AUG/VT/VT-112	PEN CE10 (ELECTRICAL PEN - SPARE)	AUG	-	c	-	-	B	-	-	-
MC	ELECTRICAL PEN.	AUG/VT/VT-112		OWN	-	-	-	-	-	-	-	-
				PRE	-	-	-	-	-	-	-	-
E-A	I900226	ISI/VT/VT-112		ISI	-	-	-	-	-	-	s	-
E1.11	PEN. CE11	AUG/VT/VT-112	PEN CE11 ELECTRICAL PEN.	AUG	-	c	-	-	B	-	-	-
MC	ELECTRICAL PEN.	AUG/VT/VT-112		OWN	-	-	-	-	-	-	-	-
				PRE	-	-	-	-	-	-	-	-
E-A	I900228	ISI/VT/VT-112		ISI	-	-	-	-	-	-	s	-
E1.11	PEN. CE12	AUG/VT/VT-112	PEN CE12 ELECTRICAL PEN.	AUG	-	c	-	-	B	-	-	-
MC	ELECTRICAL PEN.	AUG/VT/VT-112		OWN	-	-	-	-	-	-	-	-
				PRE	-	-	-	-	-	-	-	-
E-A	I900230	ISI/VT/VT-112		ISI	-	-	-	-	-	-	s	-
E1.11	PEN. CE13	AUG/VT/VT-112	PEN CE13 ELECTRICAL PEN.	AUG	-	c	-	-	B	-	-	-
MC	ELECTRICAL PEN.	AUG/VT/VT-112		OWN	-	-	-	-	-	-	-	-
				PRE	-	-	-	-	-	-	-	-

Category, ItemNO, Class	Summary / CompID / System	Scope / Method / Procedure	Iso No. Comp. Desc. Code Case		Period 1 97	Period 1 99	Period 1 00	Period 2 02	Period 2 03	Period 2 05	Period 3 06	Period 3 08
E-A	I900232	ISI/VT/VT-112		ISI	-	-	-	-	-	-	s	-
E1.11	PEN. CE14	AUG/VT/VT-112	PEN CE14 ELECTRICAL PEN.	AUG	-	c	-	-	B	-	-	-
MC	ELECTRICAL PEN.	AUG/VT/VT-112		OWN	-	-	-	-	-	-	-	-
				PRE	-	-	-	-	-	-	-	-
E-A	I900234	ISI/VT/VT-112		ISI	-	-	-	-	-	-	s	-
E1.11	PEN. CE15	AUG/VT/VT-112	PEN CE15 ELECTRICAL PEN.	AUG	-	c	-	-	B	-	-	-
MC	ELECTRICAL PEN.	AUG/VT/VT-112		OWN	-	-	-	-	-	-	-	-
				PRE	-	-	-	-	-	-	-	-
E-A	I900236	ISI/VT/VT-112		ISI	-	-	-	-	-	-	s	-
E1.11	PEN. CE16	AUG/VT/VT-112	PEN CE16 ELECTRICAL PEN.	AUG	-	c	-	-	B	-	-	-
MC	ELECTRICAL PEN.	AUG/VT/VT-112		OWN	-	-	-	-	-	-	-	-
				PRE	-	-	-	-	-	-	-	-
E-A	I900238	ISI/VT/VT-112		ISI	-	-	-	-	-	-	s	-
E1.11	PEN. CE17	AUG/VT/VT-112	PEN CE17 ELECTRICAL PEN.	AUG	-	c	-	-	B	-	-	-
MC	ELECTRICAL PEN.	AUG/VT/VT-112		OWN	-	-	-	-	-	-	-	-
				PRE	-	-	-	-	-	-	-	-
E-A	I900240	ISI/VT/VT-112		ISI	-	-	-	-	-	-	s	-
E1.11	PEN. CE18	AUG/VT/VT-112	PEN CE18 ELECTRICAL PEN.	AUG	-	c	-	-	B	-	-	-
MC	ELECTRICAL PEN.	AUG/VT/VT-112		OWN	-	-	-	-	-	-	-	-
				PRE	-	-	-	-	-	-	-	-
E-A	I900242	ISI/VT/VT-112		ISI	-	-	-	-	-	-	s	-
E1.11	PEN. CE19	AUG/VT/VT-112	PEN CE19 ELECTRICAL PEN.	AUG	-	c	-	-	B	-	-	-
MC	ELECTRICAL PEN.	AUG/VT/VT-112		OWN	-	-	-	-	-	-	-	-
				PRE	-	-	-	-	-	-	-	-
E-A	I900244	ISI/VT/VT-112		ISI	-	-	-	-	-	-	s	-
E1.11	PEN. CE20	AUG/VT/VT-112	PEN CE20 ELECTRICAL PEN.	AUG	-	c	-	-	B	-	-	-
MC	ELECTRICAL PEN.	AUG/VT/VT-112		OWN	-	-	-	-	-	-	-	-
				PRE	-	-	-	-	-	-	-	-
E-A	I900246	ISI/VT/VT-112		ISI	-	-	-	-	-	-	s	-
E1.11	PEN. CE21	AUG/VT/VT-112	PEN CE21 ELECTRICAL PEN.	AUG	-	c	-	-	B	-	-	-
MC	ELECTRICAL PEN.	AUG/VT/VT-112		OWN	-	-	-	-	-	-	-	-
				PRE	-	-	-	-	-	-	-	-
E-A	I900248	ISI/VT/VT-112		ISI	-	-	-	-	-	-	s	-
E1.11	PEN. CE22	AUG/VT/VT-112	PEN CE22 ELECTRICAL PEN.	AUG	-	c	-	-	B	-	-	-
MC	ELECTRICAL PEN.	AUG/VT/VT-112		OWN	-	-	-	-	-	-	-	-
				PRE	-	-	-	-	-	-	-	-
E-A	I900250	ISI/VT/VT-112		ISI	-	-	-	-	-	-	s	-
E1.11	PEN. CE23	AUG/VT/VT-112	PEN CE23 ELECTRICAL PEN.	AUG	-	c	-	-	B	-	-	-
MC	ELECTRICAL PEN.	AUG/VT/VT-112		OWN	-	-	-	-	-	-	-	-
				PRE	-	-	-	-	-	-	-	-

Category, ItemNO, Class	Summary / CompID / System	Scope / Method / Procedure	Iso No. Comp. Desc. Code Case		Period 1			Period 2			Period 3	
					97	99	00	02	03	05	06	08
E-A	I900252	ISI/VT/VT-112		ISI	-	-	-	-	-	-	s	-
E1.11	PEN. CE24	AUG/VT/VT-112	PEN CE24 ELECTRICAL PEN.	AUG	-	c	-	-	B	-	-	-
MC	ELECTRICAL PEN.	AUG/VT/VT-112		OWN	-	-	-	-	-	-	-	-
				PRE	-	-	-	-	-	-	-	-
E-A	I900254	ISI/VT/VT-112		ISI	-	-	-	-	-	-	s	-
E1.11	PEN. CE25	AUG/VT/VT-112	PEN CE25 ELECTRICAL PEN.	AUG	-	c	-	-	B	-	-	-
MC	ELECTRICAL PEN.	AUG/VT/VT-112		OWN	-	-	-	-	-	-	-	-
				PRE	-	-	-	-	-	-	-	-
E-A	I900258	ISI/VT/VT-112		ISI	-	-	-	-	-	-	s	-
E1.11	PEN. CE27	AUG/VT/VT-112	PEN CE27 ELECTRICAL PEN.	AUG	-	c	-	-	B	-	-	-
MC	ELECTRICAL PEN.	AUG/VT/VT-112		OWN	-	-	-	-	-	-	-	-
				PRE	-	-	-	-	-	-	-	-
E-A	I900262	ISI/VT/VT-112		ISI	-	-	-	-	-	-	s	-
E1.11	PEN. CE29	AUG/VT/VT-112	PEN CE29 ELECTRICAL PEN.	AUG	-	c	-	-	B	-	-	-
MC	ELECTRICAL PEN.	AUG/VT/VT-112		OWN	-	-	-	-	-	-	-	-
				PRE	-	-	-	-	-	-	-	-
E-A	I900264	ISI/VT/VT-112		ISI	-	-	-	-	-	-	s	-
E1.11	PEN. CE30	AUG/VT/VT-112	PEN CE30 ELECTRICAL PEN	AUG	-	c	-	-	B	-	-	-
MC	ELECTRICAL PEN.	AUG/VT/VT-112		OWN	-	-	-	-	-	-	-	-
				PRE	-	-	-	-	-	-	-	-
E-A	I900266	ISI/VT/VT-112		ISI	-	-	-	-	-	-	s	-
E1.11	PEN. CE31	AUG/VT/VT-112	PEN CE31 ELECTRICAL PEN.	AUG	-	c	-	-	B	-	-	-
MC	ELECTRICAL PEN.	AUG/VT/VT-112		OWN	-	-	-	-	-	-	-	-
				PRE	-	-	-	-	-	-	-	-
E-A	I900268	ISI/VT/VT-112		ISI	-	-	-	-	-	-	s	-
E1.11	PEN. CE32	AUG/VT/VT-112	PEN CE32 ELECTRICAL PEN	AUG	-	c	-	-	B	-	-	-
MC	ELECTRICAL PEN.	AUG/VT/VT-112		OWN	-	-	-	-	-	-	-	-
				PRE	-	-	-	-	-	-	-	-
E-A	I900270	ISI/VT/VT-112		ISI	-	-	-	-	-	-	s	-
E1.11	PEN. CE33	AUG/VT/VT-112	PEN CE33 ELECTRICAL PEN.	AUG	-	c	-	-	B	-	-	-
MC	ELECTRICAL PEN.	AUG/VT/VT-112		OWN	-	-	-	-	-	-	-	-
				PRE	-	-	-	-	-	-	-	-
E-A	I900272	ISI/VT/VT-112		ISI	-	-	-	-	-	-	s	-
E1.11	PEN. CE34	AUG/VT/VT-112	PEN CE34 ELECTRICAL PEN.	AUG	-	c	-	-	B	-	-	-
MC	ELECTRICAL PEN.	AUG/VT/VT-112		OWN	-	-	-	-	-	-	-	-
				PRE	-	-	-	-	-	-	-	-
E-A	I900600	ISI/VT/VT-112		ISI	-	-	-	-	-	-	-	s
E1.12	DOME LINER		CONTAINMENT METAL DOME	AUG	-	-	-	-	-	-	-	-
MC	CONTAINMENT			OWN	-	-	-	-	-	-	-	-
				PRE	-	-	-	-	-	-	-	-

Category, ItemNO, Class	Summary / CompID / System	Scope / Method / Procedure	Iso No. Comp. Desc. Code Case		Period 1 97	Period 1 99	Period 1 00	Period 2 02	Period 2 03	Period 2 05	Period 3 06	Period 3 08
E-A	I900602	ISI//		ISI	-	-	-	-	-	-	-	s
E1.12	SUMP A LINER		CONTAINMENT SUMP A LINER	AUG	-	-	-	-	-	-	-	-
MC	CONTAINMENT			OWN	-	-	-	-	-	-	-	-
				PRE	-	-	-	-	-	-	-	-
E-A	I900606	ISI/VT/VT-112		ISI	-	-	-	-	-	-	-	s
E1.12	PEN. 29 TTL		PEN 29 TRANSFER TUBE LINER	AUG	-	-	-	-	-	-	-	-
MC	CONTAINMENT			OWN	-	-	-	-	-	-	-	-
				PRE	-	-	-	-	-	-	-	-
E-A	I900610	ISI/VT/VT-112		ISI	-	-	-	-	-	-	-	s
E1.12	PEN. 1 (IN & OUT)		PEN 1 SPARE	AUG	-	-	-	-	-	-	-	-
MC	MECHANICAL PEN.			OWN	-	-	-	-	-	-	-	-
				PRE	-	-	-	-	-	-	-	-
E-A	I900612	ISI/VT/VT-112		ISI	-	-	-	-	-	-	-	s
E1.12	PEN. 2		PEN 2 S/G INSPECTION / MAINTENANCE	AUG	-	-	-	-	-	-	-	-
MC	MECHANICAL PEN.			OWN	-	-	-	-	-	-	-	-
				PRE	-	-	-	-	-	-	-	-
E-A	I900614	ISI/VT/VT-112		ISI	-	-	-	-	-	-	-	s
E1.12	PEN. 29		PEN 29 FUEL TRANSFER TUBE	AUG	-	-	-	-	-	-	-	-
MC	MECHANICAL PEN.			OWN	-	-	-	-	-	-	-	-
				PRE	-	-	-	-	-	-	-	-
E-A	I900616	ISI/VT/VT-112		ISI	-	-	-	-	-	-	-	s
E1.12	PEN. 99 (IN & OUT)		PEN 99 SPARE	AUG	-	-	-	-	-	-	-	-
MC	MECHANICAL PEN.			OWN	-	-	-	-	-	-	-	-
				PRE	-	-	-	-	-	-	-	-
E-A	I900618	ISI/VT/VT-112		ISI	-	-	-	-	-	-	-	s
E1.12	PEN. 100		PEN 100 CHG LINE TO B LOOP	AUG	-	-	-	-	-	-	-	-
MC	MECHANICAL PEN.			OWN	-	-	-	-	-	-	-	-
				PRE	-	-	-	-	-	-	-	-
E-A	I900620	ISI/VT/VT-112		ISI	-	-	-	-	-	-	-	s
E1.12	PEN. 101		PEN 101 SI PUMP 1B DISCHARGE	AUG	-	-	-	-	-	-	-	-
MC	MECHANICAL PEN.			OWN	-	-	-	-	-	-	-	-
				PRE	-	-	-	-	-	-	-	-
E-A	I900622	ISI/VT/VT-112		ISI	-	-	-	-	-	-	-	s
E1.12	PEN. 102		PEN 102 ALT. CHG TO A COLD LEG	AUG	-	-	-	-	-	-	-	-
MC	MECHANICAL PEN.			OWN	-	-	-	-	-	-	-	-
				PRE	-	-	-	-	-	-	-	-
E-A	I900624	ISI/VT/VT-112		ISI	-	-	-	-	-	-	-	s
E1.12	PEN. 103 (IN & OUT)		PEN 103 CONST. FIRE SW CAP	AUG	-	-	-	-	-	-	-	-
MC	MECHANICAL PEN.			OWN	-	-	-	-	-	-	-	-
				PRE	-	-	-	-	-	-	-	-

Category, ItemNO, Class	Summary / CompID / System	Scope / Method / Procedure	Iso No. Comp. Desc. Code Case		Period 1 97	Period 1 99	Period 1 00	Period 2 02	Period 2 03	Period 2 05	Period 3 06	Period 3 08
E-A	I900626	ISI/VT/VT-112		ISI	-	-	-	-	-	-	-	s
E1.12	PEN. 104 (IN & OUT)		PEN 104 SPARE	AUG	-	-	-	-	-	-	-	-
MC	MECHANICAL PEN.			OWN	-	-	-	-	-	-	-	-
				PRE	-	-	-	-	-	-	-	-
E-A	I900628	ISI/VT/VT-112		ISI	-	-	-	-	-	-	-	s
E1.12	PEN. 105		PEN 105 CONT. SPRAY PUMP 1A	AUG	-	-	-	-	-	-	-	-
MC	MECHANICAL PEN.			OWN	-	-	-	-	-	-	-	-
				PRE	-	-	-	-	-	-	-	-
E-A	I900630	ISI/VT/VT-112		ISI	-	-	-	-	-	-	-	s
E1.12	PEN. 106		PEN 106 RCP A SW OUTLET	AUG	-	-	-	-	-	-	-	-
MC	MECHANICAL PEN.			OWN	-	-	-	-	-	-	-	-
				PRE	-	-	-	-	-	-	-	-
E-A	I900632	ISI/VT/VT-112		ISI	-	-	-	-	-	-	-	s
E1.12	PEN. 107		PEN 107 SUMP A DISCHG TO WASTE HOLDUP TANK	AUG	-	-	-	-	-	-	-	-
MC	MECHANICAL PEN.			OWN	-	-	-	-	-	-	-	-
				PRE	-	-	-	-	-	-	-	-
E-A	I900634	ISI/VT/VT-112		ISI	-	-	-	-	-	-	-	s
E1.12	PEN. 108		PEN 108 SEAL WATER RET. & EXCESS LTDWN	AUG	-	-	-	-	-	-	-	-
MC	MECHANICAL PEN.			OWN	-	-	-	-	-	-	-	-
				PRE	-	-	-	-	-	-	-	-
E-A	I900636	ISI/VT/VT-112		ISI	-	-	-	-	-	-	-	s
E1.12	PEN. 109		PEN 109 CS PUMP 1B	AUG	-	-	-	-	-	-	-	-
MC	MECHANICAL PEN.			OWN	-	-	-	-	-	-	-	-
				PRE	-	-	-	-	-	-	-	-
E-A	I900640	ISI/VT/VT-112		ISI	-	-	-	-	-	-	-	s
E1.12	PEN. 110		PEN 110 (110a & 110b)	AUG	-	-	-	-	-	-	-	-
MC	MECHANICAL PEN.			OWN	-	-	-	-	-	-	-	-
				PRE	-	-	-	-	-	-	-	-
E-A	I900642	ISI/VT/VT-112		ISI	-	-	-	-	-	-	-	s
E1.12	PEN. 111		PEN 111 RHR TO B COLD LEG	AUG	-	-	-	-	-	-	-	-
MC	MECHANICAL PEN.			OWN	-	-	-	-	-	-	-	-
				PRE	-	-	-	-	-	-	-	-
E-A	I900644	ISI/VT/VT-112		ISI	-	-	-	-	-	-	-	s
E1.12	PEN. 112		PEN 112 LETDOWN TO NON-REGEN HTEX	AUG	-	-	-	-	-	-	-	-
MC	MECHANICAL PEN.			OWN	-	-	-	-	-	-	-	-
				PRE	-	-	-	-	-	-	-	-
E-A	I900646	ISI/VT/VT-112		ISI	-	-	-	-	-	-	-	s
E1.12	PEN. 113		PEN 113 SI PUMP 1A DISCHRG	AUG	-	-	-	-	-	-	-	-
MC	MECHANICAL PEN.			OWN	-	-	-	-	-	-	-	-
				PRE	-	-	-	-	-	-	-	-

Category, ItemNO, Class	Summary / CompID / System	Scope / Method / Procedure	Iso No. Comp. Desc. Code Case		Period 1 97	Period 1 99	Period 1 00	Period 2 02	Period 2 03	Period 2 05	Period 3 06	Period 3 08
E-A	I900648	ISI/VT/VT-112		ISI	-	-	-	-	-	-	-	s
E1.12	PEN. 118 (IN & OUT)		PEN 118 SPARE	AUG	-	-	-	-	-	-	-	-
MC	MECHANICAL PEN.			OWN	-	-	-	-	-	-	-	-
				PRE	-	-	-	-	-	-	-	-
E-A	I900650	ISI/VT/VT-112		ISI	-	-	-	-	-	-	-	s
E1.12	PEN. 119		PEN 119 SAFW TO S/G 1A	AUG	-	-	-	-	-	-	-	-
MC	MECHANICAL PEN.			OWN	-	-	-	-	-	-	-	-
				PRE	-	-	-	-	-	-	-	-
E-A	I900652	ISI/VT/VT-112		ISI	-	-	-	-	-	-	-	s
E1.12	PEN. 120		PEN 120 (120a & 120b)	AUG	-	-	-	-	-	-	-	-
MC	MECHANICAL PEN.			OWN	-	-	-	-	-	-	-	-
				PRE	-	-	-	-	-	-	-	-
E-A	I900654	ISI/VT/VT-112		ISI	-	-	-	-	-	-	-	s
E1.12	PEN. 121		PEN 121 (121a, 121b, 121c)	AUG	-	-	-	-	-	-	-	-
MC	MECHANICAL PEN.			OWN	-	-	-	-	-	-	-	-
				PRE	-	-	-	-	-	-	-	-
E-A	I900656	ISI/VT/VT-112		ISI	-	-	-	-	-	-	-	s
E1.12	PEN. 123		PEN 123 (123a & 123b)	AUG	-	-	-	-	-	-	-	-
MC	MECHANICAL PEN.			OWN	-	-	-	-	-	-	-	-
				PRE	-	-	-	-	-	-	-	-
E-A	I900658	ISI/VT/VT-112		ISI	-	-	-	-	-	-	-	s
E1.12	PEN. 124		PEN 124 (124a, b, c, d)	AUG	-	-	-	-	-	-	-	-
MC	MECHANICAL PEN.			OWN	-	-	-	-	-	-	-	-
				PRE	-	-	-	-	-	-	-	-
E-A	I900660	ISI/VT/VT-112		ISI	-	-	-	-	-	-	-	s
E1.12	PEN. 125		PEN 125 CCW FROM RCP 1B	AUG	-	-	-	-	-	-	-	-
MC	MECHANICAL PEN.			OWN	-	-	-	-	-	-	-	-
				PRE	-	-	-	-	-	-	-	-
E-A	I900662	ISI/VT/VT-112		ISI	-	-	-	-	-	-	-	s
E1.12	PEN. 126		PEN 126 CCW FROM RCP 1A	AUG	-	-	-	-	-	-	-	-
MC	MECHANICAL PEN.			OWN	-	-	-	-	-	-	-	-
				PRE	-	-	-	-	-	-	-	-
E-A	I900664	ISI/VT/VT-112		ISI	-	-	-	-	-	-	-	s
E1.12	PEN. 127		PEN 127 CCW TO RCP 1A	AUG	-	-	-	-	-	-	-	-
MC	MECHANICAL PEN.			OWN	-	-	-	-	-	-	-	-
				PRE	-	-	-	-	-	-	-	-
E-A	I900666	ISI/VT/VT-112		ISI	-	-	-	-	-	-	-	s
E1.12	PEN. 128		PEN 128 CCW TO RCP 1B	AUG	-	-	-	-	-	-	-	-
MC	MECHANICAL PEN.			OWN	-	-	-	-	-	-	-	-
				PRE	-	-	-	-	-	-	-	-

Category, ItemNO, Class	Summary / CompID / System	Scope / Method / Procedure	Iso No. Comp. Desc. Code Case		Period 1 97	Period 1 99	Period 1 00	Period 2 02	Period 2 03	Period 2 05	Period 3 06	Period 3 08
E-A	I900668	ISI/VT/VT-112		ISI	-	-	-	-	-	-	-	s
E1.12	PEN. 129		PEN 129 RC DRAIN TK, PR TK TO CONT. VENT	AUG	-	-	-	-	-	-	-	-
MC	MECHANICAL PEN.			OWN	-	-	-	-	-	-	-	-
				PRE	-	-	-	-	-	-	-	-
E-A	I900670	ISI/VT/VT-112		ISI	-	-	-	-	-	-	-	s
E1.12	PEN. 130		PEN 130 CCW FM REACTOR SUP. COOL	AUG	-	-	-	-	-	-	-	-
MC	MECHANICAL PEN.			OWN	-	-	-	-	-	-	-	-
				PRE	-	-	-	-	-	-	-	-
E-A	I900672	ISI/VT/VT-112		ISI	-	-	-	-	-	-	-	s
E1.12	PEN. 131		PEN 131 CCW TO REACTOR SUP. COOL	AUG	-	-	-	-	-	-	-	-
MC	MECHANICAL PEN.			OWN	-	-	-	-	-	-	-	-
				PRE	-	-	-	-	-	-	-	-
E-A	I900674	ISI/VT/VT-112		ISI	-	-	-	-	-	-	-	s
E1.12	PEN. 132		PEN 132 CONT. MINI-PURGE EX.	AUG	-	-	-	-	-	-	-	-
MC	MECHANICAL PEN.			OWN	-	-	-	-	-	-	-	-
				PRE	-	-	-	-	-	-	-	-
E-A	I900676	ISI/VT/VT-112		ISI	-	-	-	-	-	-	-	s
E1.12	PEN. 133 (IN & OUT)		PEN 133 SPARE	AUG	-	-	-	-	-	-	-	-
MC	MECHANICAL PEN.			OWN	-	-	-	-	-	-	-	-
				PRE	-	-	-	-	-	-	-	-
E-A	I900678	ISI/VT/VT-112		ISI	-	-	-	-	-	-	-	s
E1.12	PEN. 140		PEN 140 RHR PUMP SUCTION FM A HOT LEG	AUG	-	-	-	-	-	-	-	-
MC	MECHANICAL PEN.			OWN	-	-	-	-	-	-	-	-
				PRE	-	-	-	-	-	-	-	-
E-A	I900686	ISI/VT/VT-112		ISI	-	-	-	-	-	-	-	s
E1.12	PEN. 201		PEN 201 (201a & 201b)	AUG	-	-	-	-	-	-	-	-
MC	MECHANICAL PEN.			OWN	-	-	-	-	-	-	-	-
				PRE	-	-	-	-	-	-	-	-
E-A	I900688	ISI/VT/VT-112		ISI	-	-	-	-	-	-	-	s
E1.12	PEN. 202		PEN 202 (202a & 202b)	AUG	-	-	-	-	-	-	-	-
MC	MECHANICAL PEN.			OWN	-	-	-	-	-	-	-	-
				PRE	-	-	-	-	-	-	-	-
E-A	I900690	ISI/VT/VT-112		ISI	-	-	-	-	-	-	-	s
E1.12	PEN. 203		PEN 203 (203a, b, c)	AUG	-	-	-	-	-	-	-	-
MC	MECHANICAL PEN.			OWN	-	-	-	-	-	-	-	-
				PRE	-	-	-	-	-	-	-	-
E-A	I900692	ISI/VT/VT-112		ISI	-	-	-	-	-	-	-	s
E1.12	PEN. 204		PEN 204 PURGE SUPPLY DUCT	AUG	-	-	-	-	-	-	-	-
MC	MECHANICAL PEN.			OWN	-	-	-	-	-	-	-	-
				PRE	-	-	-	-	-	-	-	-

Category, ItemNO, Class	Summary / CompID / System	Scope / Method / Procedure	Iso No. Comp. Desc. Code Case		Period 1 97	Period 1 99	Period 1 00	Period 2 02	Period 2 03	Period 2 05	Period 3 06	Period 3 08
E-A	I900694	ISI/VT/VT-112		ISI	-	-	-	-	-	-	-	s
E1.12	PEN. 205		PEN 205 LOOP B HOT LEG SAMPLE	AUG	-	-	-	-	-	-	-	-
MC	MECHANICAL PEN.			OWN	-	-	-	-	-	-	-	-
				PRE	-	-	-	-	-	-	-	-
E-A	I900696	ISI/VT/VT-112		ISI	-	-	-	-	-	-	-	s
E1.12	PEN. 206		PEN 206 (206a & 206b)	AUG	-	-	-	-	-	-	-	-
MC	MECHANICAL PEN.			OWN	-	-	-	-	-	-	-	-
				PRE	-	-	-	-	-	-	-	-
E-A	I900698	ISI/VT/VT-112		ISI	-	-	-	-	-	-	-	s
E1.12	PEN. 207		PEN 207 (207a & 207b)	AUG	-	-	-	-	-	-	-	-
MC	MECHANICAL PEN.			OWN	-	-	-	-	-	-	-	-
				PRE	-	-	-	-	-	-	-	-
E-A	I900700	ISI/VT/VT-112		ISI	-	-	-	-	-	-	-	s
E1.12	PEN. 209		PEN 209 (209a & 209b)	AUG	-	-	-	-	-	-	-	-
MC	MECHANICAL PEN.			OWN	-	-	-	-	-	-	-	-
				PRE	-	-	-	-	-	-	-	-
E-A	I900702	ISI/VT/VT-112		ISI	-	-	-	-	-	-	-	s
E1.12	PEN. 210		PEN 210 OZ MAKE UP TO A & B RECOMBINERS	AUG	-	-	-	-	-	-	-	-
MC	MECHANICAL PEN.			OWN	-	-	-	-	-	-	-	-
				PRE	-	-	-	-	-	-	-	-
E-A	I900704	ISI/VT/VT-112		ISI	-	-	-	-	-	-	-	s
E1.12	PEN. 300		PEN 300 PURGE EXHAUST DUCT	AUG	-	-	-	-	-	-	-	-
MC	MECHANICAL PEN.			OWN	-	-	-	-	-	-	-	-
				PRE	-	-	-	-	-	-	-	-
E-A	I900706	ISI/VT/VT-112		ISI	-	-	-	-	-	-	-	s
E1.12	PEN. 301 (IN & OUT)		PEN 301 AUX STEAM SUP TO CONT.	AUG	-	-	-	-	-	-	-	-
MC	MECHANICAL PEN.			OWN	-	-	-	-	-	-	-	-
				PRE	-	-	-	-	-	-	-	-
E-A	I900708	ISI/VT/VT-112		ISI	-	-	-	-	-	-	-	s
E1.12	PEN. 303 (IN & OUT)		PEN 303 AUX STEAM SUP TO CONT.	AUG	-	-	-	-	-	-	-	-
MC	MECHANICAL PEN.			OWN	-	-	-	-	-	-	-	-
				PRE	-	-	-	-	-	-	-	-
E-A	I900710	ISI/VT/VT-112		ISI	-	-	-	-	-	-	-	s
E1.12	PEN. 304		PEN 304 (304a & 304b)	AUG	-	-	-	-	-	-	-	-
MC	MECHANICAL PEN.			OWN	-	-	-	-	-	-	-	-
				PRE	-	-	-	-	-	-	-	-
E-A	I900712	ISI/VT/VT-112		ISI	-	-	-	-	-	-	-	s
E1.12	PEN. 305		PEN 305 (305a, b, c, d, e)	AUG	-	-	-	-	-	-	-	-
MC	MECHANICAL PEN.			OWN	-	-	-	-	-	-	-	-
				PRE	-	-	-	-	-	-	-	-

Category, ItemNO, Class	Summary / CompID / System	Scope / Method / Procedure	Iso No. Comp. Desc. Code Case		Period 1 97	Period 1 99	Period 1 00	Period 2 02	Period 2 03	Period 2 05	Period 3 06	Period 3 08
E-A	I900714	ISI/VT/VT-112		ISI	-	-	-	-	-	-	-	s
E1.12	PEN. 306 (IN & OUT)		PEN 306 SPARE	AUG	-	-	-	-	-	-	-	-
MC	MECHANICAL PEN.			OWN	-	-	-	-	-	-	-	-
				PRE	-	-	-	-	-	-	-	-
E-A	I900716	ISI/VT/VT-112		ISI	-	-	-	-	-	-	-	s
E1.12	PEN. 307		PEN 307 FIRE SERVICE WATER	AUG	-	-	-	-	-	-	-	-
MC	MECHANICAL PEN.			OWN	-	-	-	-	-	-	-	-
				PRE	-	-	-	-	-	-	-	-
E-A	I900718	ISI/VT/VT-112		ISI	-	-	-	-	-	-	-	s
E1.12	PEN. 308		PEN 308 SW FROM A FAN COOLER	AUG	-	-	-	-	-	-	-	-
MC	MECHANICAL PEN.			OWN	-	-	-	-	-	-	-	-
				PRE	-	-	-	-	-	-	-	-
E-A	I900720	ISI/VT/VT-112		ISI	-	-	-	-	-	-	-	s
E1.12	PEN. 309		PEN 309 MINI-PURGE SUPPLY	AUG	-	-	-	-	-	-	-	-
MC	MECHANICAL PEN.			OWN	-	-	-	-	-	-	-	-
				PRE	-	-	-	-	-	-	-	-
E-A	I900722	ISI/VT/VT-112		ISI	-	-	-	-	-	-	-	s
E1.12	PEN. 310		PEN 310 (310a & 310b)	AUG	-	-	-	-	-	-	-	-
MC	MECHANICAL PEN.			OWN	-	-	-	-	-	-	-	-
				PRE	-	-	-	-	-	-	-	-
E-A	I900724	ISI/VT/VT-112		ISI	-	-	-	-	-	-	-	s
E1.12	PEN. 311		PEN 311 SW FROMB FAN COOLER	AUG	-	-	-	-	-	-	-	-
MC	MECHANICAL PEN.			OWN	-	-	-	-	-	-	-	-
				PRE	-	-	-	-	-	-	-	-
E-A	I900726	ISI/VT/VT-112		ISI	-	-	-	-	-	-	-	s
E1.12	PEN. 312		PEN 312 SW TO D FAN COOLER	AUG	-	-	-	-	-	-	-	-
MC	MECHANICAL PEN.			OWN	-	-	-	-	-	-	-	-
				PRE	-	-	-	-	-	-	-	-
E-A	I900728	ISI/VT/VT-112		ISI	-	-	-	-	-	-	-	s
E1.12	PEN. 313		PEN 313 LEAKAGE TEST DEPRESSURIZATION	AUG	-	-	-	-	-	-	-	-
MC	MECHANICAL PEN.			OWN	-	-	-	-	-	-	-	-
				PRE	-	-	-	-	-	-	-	-
E-A	I900730	ISI/VT/VT-112		ISI	-	-	-	-	-	-	-	s
E1.12	PEN. 315		PEN 315 SW FROM C FAN COOLER	AUG	-	-	-	-	-	-	-	-
MC	MECHANICAL PEN.			OWN	-	-	-	-	-	-	-	-
				PRE	-	-	-	-	-	-	-	-
E-A	I900732	ISI/VT/VT-112		ISI	-	-	-	-	-	-	-	s
E1.12	PEN. 316		PEN 316 SW TO B FAN COOLER	AUG	-	-	-	-	-	-	-	-
MC	MECHANICAL PEN.			OWN	-	-	-	-	-	-	-	-
				PRE	-	-	-	-	-	-	-	-

Category, ItemNO, Class	Summary / CompID / System	Scope / Method / Procedure	Iso No. Comp. Desc. Code Case		Period 1 97	Period 1 99	Period 1 00	Period 2 02	Period 2 03	Period 2 05	Period 3 06	Period 3 08
E-A	I900734	ISI/VT/VT-112		ISI	-	-	-	-	-	-	-	s
E1.12	PEN. 317		PEN 317 LEAKAGE TEST SUPPLY	AUG	-	-	-	-	-	-	-	-
MC	MECHANICAL PEN.			OWN	-	-	-	-	-	-	-	-
				PRE	-	-	-	-	-	-	-	-
E-A	I900736	ISI/VT/VT-112		ISI	-	-	-	-	-	-	-	s
E1.12	PEN. 318 (IN & OUT)		PEN 318 DEADWEIGHT TESTER	AUG	-	-	-	-	-	-	-	-
MC	MECHANICAL PEN.			OWN	-	-	-	-	-	-	-	-
				PRE	-	-	-	-	-	-	-	-
E-A	I900738	ISI/VT/VT-112		ISI	-	-	-	-	-	-	-	s
E1.12	PEN. 319		PEN 319 SW TO A FAN COOLER	AUG	-	-	-	-	-	-	-	-
MC	MECHANICAL PEN.			OWN	-	-	-	-	-	-	-	-
				PRE	-	-	-	-	-	-	-	-
E-A	I900740	ISI/VT/VT-112		ISI	-	-	-	-	-	-	-	s
E1.12	PEN. 320		PEN 320 SW TO C FAN COOLER	AUG	-	-	-	-	-	-	-	-
MC	MECHANICAL PEN.			OWN	-	-	-	-	-	-	-	-
				PRE	-	-	-	-	-	-	-	-
E-A	I900742	ISI/VT/VT-112		ISI	-	-	-	-	-	-	-	s
E1.12	PEN. 321		PEN 321 A S/G BLOWDOWN	AUG	-	-	-	-	-	-	-	-
MC	MECHANICAL PEN.			OWN	-	-	-	-	-	-	-	-
				PRE	-	-	-	-	-	-	-	-
E-A	I900744	ISI/VT/VT-112		ISI	-	-	-	-	-	-	-	s
E1.12	PEN. 322		PEN 322 B S/G BLOWDOWN	AUG	-	-	-	-	-	-	-	-
MC	MECHANICAL PEN.			OWN	-	-	-	-	-	-	-	-
				PRE	-	-	-	-	-	-	-	-
E-A	I900746	ISI/VT/VT-112		ISI	-	-	-	-	-	-	-	s
E1.12	PEN. 323		PEN 323 SW FM D FAN COOLER	AUG	-	-	-	-	-	-	-	-
MC	MECHANICAL PEN.			OWN	-	-	-	-	-	-	-	-
				PRE	-	-	-	-	-	-	-	-
E-A	I900748	ISI/VT/VT-112		ISI	-	-	-	-	-	-	-	s
E1.12	PEN. 324		PEN 324 DEMIN WATER TO CONTAINMENT	AUG	-	-	-	-	-	-	-	-
MC	MECHANICAL PEN.			OWN	-	-	-	-	-	-	-	-
				PRE	-	-	-	-	-	-	-	-
E-A	I900750	ISI/VT/VT-112		ISI	-	-	-	-	-	-	-	s
E1.12	PEN. 325		PEN 325 DEMIN WATER CLEANUP	AUG	-	-	-	-	-	-	-	-
MC	MECHANICAL PEN.			OWN	-	-	-	-	-	-	-	-
				PRE	-	-	-	-	-	-	-	-
E-A	I900752	ISI/VT/VT-112		ISI	-	-	-	-	-	-	-	s
E1.12	PEN. 326 (IN & OUT)		PEN 326 SPARE	AUG	-	-	-	-	-	-	-	-
MC	MECHANICAL PEN.			OWN	-	-	-	-	-	-	-	-
				PRE	-	-	-	-	-	-	-	-

Category, ItemNO, Class	Summary / CompID / System	Scope / Method / Procedure	Iso No. Comp. Desc. Code Case		Period 1			Period 2			Period 3	
					97	99	00	02	03	05	06	08
E-A	I900754	ISI/VT/VT-112		ISI	-	-	-	-	-	-	-	s
E1.12	PEN. 332		PEN 332 (332a, b, c, d)	AUG	-	-	-	-	-	-	-	-
MC	MECHANICAL PEN.			OWN	-	-	-	-	-	-	-	-
				PRE	-	-	-	-	-	-	-	-
E-A	I900756	ISI/VT/VT-112		ISI	-	-	-	-	-	-	-	s
E1.12	PEN. 336 (IN & OUT)		PEN 336 SPARE	AUG	-	-	-	-	-	-	-	-
MC	MECHANICAL PEN.			OWN	-	-	-	-	-	-	-	-
				PRE	-	-	-	-	-	-	-	-
E-A	I900758	ISI/VT/VT-112		ISI	-	-	-	-	-	-	-	s
E1.12	PEN. 401		PEN 401 MS FM A S/G	AUG	-	-	-	-	-	-	-	-
MC	MECHANICAL PEN.			OWN	-	-	-	-	-	-	-	-
				PRE	-	-	-	-	-	-	-	-
E-A	I900760	ISI/VT/VT-112		ISI	-	-	-	-	-	-	-	s
E1.12	PEN. 402		PEN 402 MS FM B S/G	AUG	-	-	-	-	-	-	-	-
MC	MECHANICAL PEN.			OWN	-	-	-	-	-	-	-	-
				PRE	-	-	-	-	-	-	-	-
E-A	I900762	ISI/VT/VT-112		ISI	-	-	-	-	-	-	-	s
E1.12	PEN. 403		PEN 403 FW LINE TO A S/G	AUG	-	-	-	-	-	-	-	-
MC	MECHANICAL PEN.			OWN	-	-	-	-	-	-	-	-
				PRE	-	-	-	-	-	-	-	-
E-A	I900764	ISI/VT/VT-112		ISI	-	-	-	-	-	-	-	s
E1.12	PEN. 404		PEN 404 FW LINE TO B S/G	AUG	-	-	-	-	-	-	-	-
MC	MECHANICAL PEN.			OWN	-	-	-	-	-	-	-	-
				PRE	-	-	-	-	-	-	-	-
E-A	I900766	ISI/VT/VT-112		ISI	-	-	-	-	-	-	-	s
E1.12	PEN. 1000 (IN & OUT)		PEN 1000 PERSONNEL HATCH	AUG	-	-	-	-	-	-	-	-
MC	MECHANICAL PEN.			OWN	-	-	-	-	-	-	-	-
				PRE	-	-	-	-	-	-	-	-
E-A	I900768	ISI/VT/VT-112		ISI	-	-	-	-	-	-	-	s
E1.12	PEN. 2000 (IN & OUT)		PEN 2000 EQUIPMENT HATCH	AUG	-	-	-	-	-	-	-	-
MC	MECHANICAL PEN.			OWN	-	-	-	-	-	-	-	-
				PRE	-	-	-	-	-	-	-	-
E-A	I900770	ISI/VT/VT-112		ISI	-	-	-	-	-	-	-	s
E1.12	PEN AE1		PEN AE1 ELECTRICAL PEN	AUG	-	-	-	-	-	-	-	-
MC	ELECTRICAL PEN.			OWN	-	-	-	-	-	-	-	-
				PRE	-	-	-	-	-	-	-	-
E-A	I900772	ISI/VT/VT-112		ISI	-	-	-	-	-	-	-	s
E1.12	PEN. AE2		PEN AE2 ELECTRICAL PEN	AUG	-	-	-	-	-	-	-	-
MC	ELECTRICAL PEN.			OWN	-	-	-	-	-	-	-	-
				PRE	-	-	-	-	-	-	-	-

Category, ItemNO, Class	Summary / CompID / System	Scope / Method / Procedure	Iso No. Comp. Desc. Code Case		Period 1 97	Period 1 99	Period 1 00	Period 2 02	Period 2 03	Period 2 05	Period 3 06	Period 3 08
E-A	I900774	ISI/VT/VT-112		ISI	-	-	-	-	-	-	-	s
E1.12	PEN. AE3		PEN AE3 ELECTRICAL PEN	AUG	-	-	-	-	-	-	-	-
MC	ELECTRICAL PEN.			OWN	-	-	-	-	-	-	-	-
				PRE	-	-	-	-	-	-	-	-
E-A	I900776	ISI/VT/VT-112		ISI	-	-	-	-	-	-	-	s
E1.12	PEN. AE4		PEN AE4 ELECTRICAL PEN	AUG	-	-	-	-	-	-	-	-
MC	ELECTRICAL PEN.			OWN	-	-	-	-	-	-	-	-
				PRE	-	-	-	-	-	-	-	-
E-A	I900778	ISI/VT/VT-112		ISI	-	-	-	-	-	-	-	s
E1.12	PEN. AE5		PEN AE5 ELECTRICAL PEN	AUG	-	-	-	-	-	-	-	-
MC	ELECTRICAL PEN.			OWN	-	-	-	-	-	-	-	-
				PRE	-	-	-	-	-	-	-	-
E-A	I900780	ISI/VT/VT-112		ISI	-	-	-	-	-	-	-	s
E1.12	PEN. AE6		PEN AE6 ELECTRICAL PEN	AUG	-	-	-	-	-	-	-	-
MC	ELECTRICAL PEN.			OWN	-	-	-	-	-	-	-	-
				PRE	-	-	-	-	-	-	-	-
E-A	I900782	ISI/VT/VT-112		ISI	-	-	-	-	-	-	-	s
E1.12	PEN. AE7		PEN AE7 ELECTRICAL PEN	AUG	-	-	-	-	-	-	-	-
MC	ELECTRICAL PEN.			OWN	-	-	-	-	-	-	-	-
				PRE	-	-	-	-	-	-	-	-
E-A	I900784	ISI/VT/VT-112		ISI	-	-	-	-	-	-	-	s
E1.12	PEN. AE8		PEN AE8 ELECTRICAL PEN	AUG	-	-	-	-	-	-	-	-
MC	ELECTRICAL PEN.			OWN	-	-	-	-	-	-	-	-
				PRE	-	-	-	-	-	-	-	-
E-A	I900786	ISI/VT/VT-112		ISI	-	-	-	-	-	-	-	s
E1.12	PEN. AE9		PEN AE9 ELECTRICAL PEN	AUG	-	-	-	-	-	-	-	-
MC	ELECTRICAL PEN.			OWN	-	-	-	-	-	-	-	-
				PRE	-	-	-	-	-	-	-	-
E-A	I900788	ISI/VT/VT-112		ISI	-	-	-	-	-	-	-	s
E1.12	PEN. AE10		PEN AE10 ELECTRICAL PEN	AUG	-	-	-	-	-	-	-	-
MC	ELECTRICAL PEN.			OWN	-	-	-	-	-	-	-	-
				PRE	-	-	-	-	-	-	-	-
E-A	I900790	ISI/VT/VT-112		ISI	-	-	-	-	-	-	-	s
E1.12	PEN. AE11		PEN AE11 ELECTRICAL PEN	AUG	-	-	-	-	-	-	-	-
MC	ELECTRICAL PEN.			OWN	-	-	-	-	-	-	-	-
				PRE	-	-	-	-	-	-	-	-
E-A	I900792	ISI/VT/VT-112		ISI	-	-	-	-	-	-	-	s
E1.12	PEN. AE12		PEN AE12 ELECTRICAL PEN	AUG	-	-	-	-	-	-	-	-
MC	ELECTRICAL PEN.			OWN	-	-	-	-	-	-	-	-
				PRE	-	-	-	-	-	-	-	-

Category, ItemNO, Class	Summary / CompID / System	Scope / Method / Procedure	Iso No. Comp. Desc. Code Case		Period 1 97	Period 1 99	Period 1 00	Period 2 02	Period 2 03	Period 2 05	Period 3 06	Period 3 08
E-A	I900794	ISI/VT/VT-112		ISI	-	-	-	-	-	-	-	s
E1.12	PEN. AE13		PEN AE13 ELECTRICAL PEN	AUG	-	-	-	-	-	-	-	-
MC	ELECTRICAL PEN.			OWN	-	-	-	-	-	-	-	-
				PRE	-	-	-	-	-	-	-	-
E-A	I900796	ISI/VT/VT-112		ISI	-	-	-	-	-	-	-	s
E1.12	PEN. AE14		PEN AE14 ELECTRICAL PEN	AUG	-	-	-	-	-	-	-	-
MC	ELECTRICAL PEN.			OWN	-	-	-	-	-	-	-	-
				PRE	-	-	-	-	-	-	-	-
E-A	I900798	ISI/VT/VT-112		ISI	-	-	-	-	-	-	-	s
E1.12	PEN. BE1		PEN BE1 ELECTRICAL PEN	AUG	-	-	-	-	-	-	-	-
MC	ELECTRICAL PEN.			OWN	-	-	-	-	-	-	-	-
				PRE	-	-	-	-	-	-	-	-
E-A	I900800	ISI/VT/VT-112		ISI	-	-	-	-	-	-	-	s
E1.12	PEN. BE2		PEN BE2 ELECTRICAL PEN	AUG	-	-	-	-	-	-	-	-
MC	ELECTRICAL PEN.			OWN	-	-	-	-	-	-	-	-
				PRE	-	-	-	-	-	-	-	-
E-A	I900802	ISI/VT/VT-112		ISI	-	-	-	-	-	-	-	s
E1.12	PEN. BE3		PEN BE3 ELECTRICAL PEN	AUG	-	-	-	-	-	-	-	-
MC	ELECTRICAL PEN.			OWN	-	-	-	-	-	-	-	-
				PRE	-	-	-	-	-	-	-	-
E-A	I900804	ISI/VT/VT-112		ISI	-	-	-	-	-	-	-	s
E1.12	PEN. BE4		PEN BE4 ELECTRICAL PEN	AUG	-	-	-	-	-	-	-	-
MC	ELECTRICAL PEN.			OWN	-	-	-	-	-	-	-	-
				PRE	-	-	-	-	-	-	-	-
E-A	I900806	ISI/VT/VT-112		ISI	-	-	-	-	-	-	-	s
E1.12	PEN. CE1		PEN CE1 ELECTRICAL PEN	AUG	-	-	-	-	-	-	-	-
MC	ELECTRICAL PEN.			OWN	-	-	-	-	-	-	-	-
				PRE	-	-	-	-	-	-	-	-
E-A	I900808	ISI/VT/VT-112		ISI	-	-	-	-	-	-	-	s
E1.12	PEN. CE2		PEN CE2 ELECTRICAL PEN	AUG	-	-	-	-	-	-	-	-
MC	ELECTRICAL PEN.			OWN	-	-	-	-	-	-	-	-
				PRE	-	-	-	-	-	-	-	-
E-A	I900810	ISI/VT/VT-112		ISI	-	-	-	-	-	-	-	s
E1.12	PEN. CE3		PEN CE3 ELECTRICAL PEN	AUG	-	-	-	-	-	-	-	-
MC	ELECTRICAL PEN.			OWN	-	-	-	-	-	-	-	-
				PRE	-	-	-	-	-	-	-	-
E-A	I900812	ISI/VT/VT-112		ISI	-	-	-	-	-	-	-	s
E1.12	PEN. CE4		PEN CE4 ELECTRICAL PEN	AUG	-	-	-	-	-	-	-	-
MC	ELECTRICAL PEN.			OWN	-	-	-	-	-	-	-	-
				PRE	-	-	-	-	-	-	-	-

Category, ItemNO, Class	Summary / CompID / System	Scope / Method / Procedure	Iso No. Comp. Desc. Code Case		Period 1 97	Period 1 99	Period 1 00	Period 2 02	Period 2 03	Period 2 05	Period 3 06	Period 3 08
E-A	I900814	ISI/VT/VT-112		ISI	-	-	-	-	-	-	-	s
E1.12	PEN. CE5		PEN CE5 ELECTRICAL PEN	AUG	-	-	-	-	-	-	-	-
MC	ELECTRICAL PEN.			OWN	-	-	-	-	-	-	-	-
				PRE	-	-	-	-	-	-	-	-
E-A	I900816	ISI/VT/VT-112		ISI	-	-	-	-	-	-	-	s
E1.12	PEN. CE6		PEN CE6 ELECTRICAL PEN	AUG	-	-	-	-	-	-	-	-
MC	ELECTRICAL PEN.			OWN	-	-	-	-	-	-	-	-
				PRE	-	-	-	-	-	-	-	-
E-A	I900818	ISI/VT/VT-112		ISI	-	-	-	-	-	-	-	s
E1.12	PEN. CE7		PEN CE7 ELECTRICAL PEN	AUG	-	-	-	-	-	-	-	-
MC	ELECTRICAL PEN.			OWN	-	-	-	-	-	-	-	-
				PRE	-	-	-	-	-	-	-	-
E-A	I900820	ISI/VT/VT-112		ISI	-	-	-	-	-	-	-	s
E1.12	PEN. CE8		PEN CE8 ELECTRICAL PEN	AUG	-	-	-	-	-	-	-	-
MC	ELECTRICAL PEN.			OWN	-	-	-	-	-	-	-	-
				PRE	-	-	-	-	-	-	-	-
E-A	I900822	ISI/VT/VT-112		ISI	-	-	-	-	-	-	-	s
E1.12	PEN. CE9		PEN CE9 ELECTRICAL PEN	AUG	-	-	-	-	-	-	-	-
MC	ELECTRICAL PEN.			OWN	-	-	-	-	-	-	-	-
				PRE	-	-	-	-	-	-	-	-
E-A	I900824	ISI/VT/VT-112		ISI	-	-	-	-	-	-	-	s
E1.12	PEN. CE10 (IN & OUT)		PEN CE10 (ELECTRICAL PEN -SPARE)	AUG	-	-	-	-	-	-	-	-
MC	ELECTRICAL PEN.			OWN	-	-	-	-	-	-	-	-
				PRE	-	-	-	-	-	-	-	-
E-A	I900826	ISI/VT/VT-112		ISI	-	-	-	-	-	-	-	s
E1.12	PEN. CE11		PEN CE11 ELECTRICAL PEN	AUG	-	-	-	-	-	-	-	-
MC	ELECTRICAL PEN.			OWN	-	-	-	-	-	-	-	-
				PRE	-	-	-	-	-	-	-	-
E-A	I900828	ISI/VT/VT-112		ISI	-	-	-	-	-	-	-	s
E1.12	PEN. CE12		PEN CE12 ELECTRICAL PEN	AUG	-	-	-	-	-	-	-	-
MC	ELECTRICAL PEN.			OWN	-	-	-	-	-	-	-	-
				PRE	-	-	-	-	-	-	-	-
E-A	I900830	ISI/VT/VT-112		ISI	-	-	-	-	-	-	-	s
E1.12	PEN CE13		PEN CE13 ELECTRICAL PEN	AUG	-	-	-	-	-	-	-	-
MC	ELECTRICAL PEN.			OWN	-	-	-	-	-	-	-	-
				PRE	-	-	-	-	-	-	-	-
E-A	I900832	ISI/VT/VT-112		ISI	-	-	-	-	-	-	-	s
E1.12	PEN. CE14		PEN CE14 ELECTRICAL PEN	AUG	-	-	-	-	-	-	-	-
MC	ELECTRICAL PEN.			OWN	-	-	-	-	-	-	-	-
				PRE	-	-	-	-	-	-	-	-

Category, ItemNO, Class	Summary / CompID / System	Scope / Method / Procedure	Iso No. Comp. Desc. Code Case		Period 1 97	Period 1 99	Period 1 00	Period 2 02	Period 2 03	Period 2 05	Period 3 06	Period 3 08
E-A	I900834	ISI/VT/VT-112		ISI	-	-	-	-	-	-	-	s
E1.12	PEN. CE15		PEN CE15 ELECTRICAL PEN	AUG	-	-	-	-	-	-	-	-
MC	ELECTRICAL PEN.			OWN	-	-	-	-	-	-	-	-
				PRE	-	-	-	-	-	-	-	-
E-A	I900836	ISI/VT/VT-112		ISI	-	-	-	-	-	-	-	s
E1.12	PEN. CE16		PEN CE16 ELECTRICAL PEN	AUG	-	-	-	-	-	-	-	-
MC	ELECTRICAL PEN.			OWN	-	-	-	-	-	-	-	-
				PRE	-	-	-	-	-	-	-	-
E-A	I900838	ISI/VT/VT-112		ISI	-	-	-	-	-	-	-	s
E1.12	PEN. CE17		PEN CE17 ELECTRICAL PEN	AUG	-	-	-	-	-	-	-	-
MC	ELECTRICAL PEN.			OWN	-	-	-	-	-	-	-	-
				PRE	-	-	-	-	-	-	-	-
E-A	I900840	ISI/VT/VT-112		ISI	-	-	-	-	-	-	-	s
E1.12	PEN. CE18		PEN CE18 ELECTRICAL PEN	AUG	-	-	-	-	-	-	-	-
MC	ELECTRICAL PEN.			OWN	-	-	-	-	-	-	-	-
				PRE	-	-	-	-	-	-	-	-
E-A	I900842	ISI/VT/VT-112		ISI	-	-	-	-	-	-	-	s
E1.12	PEN. CE19		PEN CE19 ELECTRICAL PEN	AUG	-	-	-	-	-	-	-	-
MC	ELECTRICAL PEN.			OWN	-	-	-	-	-	-	-	-
				PRE	-	-	-	-	-	-	-	-
E-A	I900844	ISI/VT/VT-112		ISI	-	-	-	-	-	-	-	s
E1.12	PEN. CE20		PEN CE20 ELECTRICAL PEN	AUG	-	-	-	-	-	-	-	-
MC	ELECTRICAL PEN.			OWN	-	-	-	-	-	-	-	-
				PRE	-	-	-	-	-	-	-	-
E-A	I900846	ISI/VT/VT-112		ISI	-	-	-	-	-	-	-	s
E1.12	PEN. CE21		PEN CE21 ELECTRICAL PEN	AUG	-	-	-	-	-	-	-	-
MC	ELECTRICAL PEN.			OWN	-	-	-	-	-	-	-	-
				PRE	-	-	-	-	-	-	-	-
E-A	I900848	ISI/VT/VT-112		ISI	-	-	-	-	-	-	-	s
E1.12	PEN. CE22		PEN CE22 ELECTRICAL PEN	AUG	-	-	-	-	-	-	-	-
MC	ELECTRICAL PEN.			OWN	-	-	-	-	-	-	-	-
				PRE	-	-	-	-	-	-	-	-
E-A	I900850	ISI/VT/VT-112		ISI	-	-	-	-	-	-	-	s
E1.12	PEN. CE23		PEN CE23 ELECTRICAL PEN	AUG	-	-	-	-	-	-	-	-
MC	ELECTRICAL PEN.			OWN	-	-	-	-	-	-	-	-
				PRE	-	-	-	-	-	-	-	-
E-A	I900852	ISI/VT/VT-112		ISI	-	-	-	-	-	-	-	s
E1.12	PEN. CE24		PEN CE24 ELECTRICAL PEN	AUG	-	-	-	-	-	-	-	-
MC	ELECTRICAL PEN.			OWN	-	-	-	-	-	-	-	-
				PRE	-	-	-	-	-	-	-	-

Category, ItemNO, Class	Summary / CompID / System	Scope / Method / Procedure	Iso No. Comp. Desc. Code Case		Period 1 97	Period 1 99	Period 1 00	Period 2 02	Period 2 03	Period 2 05	Period 3 06	Period 3 08
E-A	I900854	ISI/VT/VT-112		ISI	-	-	-	-	-	-	-	s
E1.12	PEN. CE25		PEN CE25 ELECTRICAL PEN	AUG	-	-	-	-	-	-	-	-
MC	ELECTRICAL PEN.			OWN	-	-	-	-	-	-	-	-
				PRE	-	-	-	-	-	-	-	-
E-A	I900858	ISI/VT/VT-112		ISI	-	-	-	-	-	-	-	s
E1.12	PEN. CE27		PEN CE27 ELECTRICAL PEN	AUG	-	-	-	-	-	-	-	-
MC	ELECTRICAL PEN.			OWN	-	-	-	-	-	-	-	-
				PRE	-	-	-	-	-	-	-	-
E-A	I900862	ISI/VT/VT-112		ISI	-	-	-	-	-	-	-	s
E1.12	PEN. CE29		PEN CE29 ELECTRICAL PEN	AUG	-	-	-	-	-	-	-	-
MC	ELECTRICAL PEN.			OWN	-	-	-	-	-	-	-	-
				PRE	-	-	-	-	-	-	-	-
E-A	I900864	ISI/VT/VT-112		ISI	-	-	-	-	-	-	-	s
E1.12	PEN. CE30		PEN CE30 ELECTRICAL PEN	AUG	-	-	-	-	-	-	-	-
MC	ELECTRICAL PEN.			OWN	-	-	-	-	-	-	-	-
				PRE	-	-	-	-	-	-	-	-
E-A	I900866	ISI/VT/VT-112		ISI	-	-	-	-	-	-	-	s
E1.12	PEN. CE31		PEN CE31 ELECTRICAL PEN	AUG	-	-	-	-	-	-	-	-
MC	ELECTRICAL PEN.			OWN	-	-	-	-	-	-	-	-
				PRE	-	-	-	-	-	-	-	-
E-A	I900868	ISI/VT/VT-112		ISI	-	-	-	-	-	-	-	s
E1.12	PEN. CE32		PEN CE32 ELECTRICAL PEN	AUG	-	-	-	-	-	-	-	-
MC	ELECTRICAL PEN.			OWN	-	-	-	-	-	-	-	-
				PRE	-	-	-	-	-	-	-	-
E-A	I900870	ISI/VT/VT-112		ISI	-	-	-	-	-	-	-	s
E1.12	PEN. CE33		PEN CE33 ELECTRICAL PEN	AUG	-	-	-	-	-	-	-	-
MC	ELECTRICAL PEN.			OWN	-	-	-	-	-	-	-	-
				PRE	-	-	-	-	-	-	-	-
E-A	I900872	ISI/VT/VT-112		ISI	-	-	-	-	-	-	-	s
E1.12	PEN. CE34		PEN CE34 ELECTRICAL PEN	AUG	-	-	-	-	-	-	-	-
MC	ELECTRICAL PEN.			OWN	-	-	-	-	-	-	-	-
				PRE	-	-	-	-	-	-	-	-
E-C	I901000	ISI/VT/VT-112		ISI	-	-	-	-	-	t	t	t
E4.11	CONT. AUG. EXAM		CONTAINMENT AUG. EXAM. VISIBLE SURFACE	AUG	-	-	-	-	-	-	-	-
MC	CONTAINMENT			OWN	-	-	-	-	-	-	-	-
				PRE	-	-	-	-	-	-	-	-
E-C	I901001	ISI/VT/VT-112		ISI	-	-	-	-	-	h	-	h
E4.11	P29 VT Area	ISI/VT/VT-112	P29 Liner Floor Area Aug VT	AUG	-	-	-	-	-	-	-	-
MC	CONTAINMENT			OWN	-	-	-	-	-	-	-	-
				PRE	-	-	-	-	-	-	-	-

Category, ItemNO, Class	Summary / CompID / System	Scope / Method / Procedure	Iso No. Comp. Desc. Code Case		Period 1 97	Period 1 99	Period 1 00	Period 2 02	Period 2 03	Period 2 05	Period 3 06	Period 3 08
E-C	I901002	ISI/VT/VT-112		ISI	-	-	-	-	c	-	h	-
E4.11	Sump A	ISI//	Sump A	AUG	-	-	-	-	-	-	-	-
MC	CONTAINMENT			OWN	-	-	-	-	-	-	-	-
				PRE	-	-	-	-	-	-	-	-
E-C	I901500			ISI	-	-	-	-	-	t	t	t
E4.12	CONT. AUG. EXAM		CONTAINMENT AUG. EXAM SURFACE AREA GRID	AUG	-	-	-	-	-	-	-	-
MC	CONTAINMENT			OWN	-	-	-	-	-	-	-	-
				PRE	-	-	-	-	-	-	-	-
E-C	I901501	ISI/UT/UT-102		ISI	-	-	-	-	-	h	-	h
E4.12	P29 UT Area	ISI/UT/UT-102	P29 Liner Floor Area Aug UT	AUG	-	-	-	-	-	-	-	-
MC	CONTAINMENT			OWN	-	-	-	-	-	-	-	-
				PRE	-	-	-	-	-	-	-	-
E-C	I901502	ISI/UT/UT-102		ISI	-	-	-	-	c	-	h	-
E4.12	Sump A	PSI/UT/UT-102	Sump A	AUG	-	-	-	-	-	-	-	-
MC	CONTAINMENT	ISI//		OWN	-	-	-	-	-	-	-	-
				PRE	-	-	-	-	c	-	-	-
E-D	I902000			ISI	-	-	-	-	-	-	-	-
E5.10	MC SEALS		CONTAINMENT SEALS	AUG	-	-	-	-	-	-	-	-
MC	CONT. SEALS			OWN	-	-	-	-	-	-	-	-
				PRE	-	-	-	-	-	-	-	-
E-D	I902050			ISI	-	-	-	-	-	-	-	-
E5.20	MC GASKETS		CONTAINMENT GASKETS	AUG	-	-	-	-	-	-	-	-
MC	CONT. GASKETS			OWN	-	-	-	-	-	-	-	-
				PRE	-	-	-	-	-	-	-	-
E-D	I902300	ISI/VT/VT-112		ISI	-	-	c	-	-	-	-	-
E5.30	BASEMENT 0 TO 120 DEG.		MOISTURE BARRIER	AUG	-	-	-	-	-	-	-	-
MC	MOISTURE BARRIER			OWN	-	-	-	-	-	-	-	-
				PRE	-	-	-	-	-	-	-	-
E-D	I902301	ISI/VT/VT-112		ISI	-	-	-	-	r	s	-	-
E5.30	BASEMENT 120 TO 240 DEG.	PSI/VT/VT-112	MOISTURE BARRIER	AUG	-	-	-	-	-	-	-	-
MC	MOISTURE BARRIER			OWN	-	-	-	-	-	-	-	-
				PRE	-	-	-	-	-	s	-	-
E-D	I902302	ISI/VT/VT-112		ISI	-	-	-	-	-	-	s	-
E5.30	BASEMENT 240 TO 360 DEG.		MOISTURE BARRIER	AUG	-	-	-	-	-	-	-	-
MC	MOISTURE BARRIER			OWN	-	-	-	-	-	-	-	-
				PRE	-	-	-	-	-	-	-	-
E-G	I903000	ISI/VT/VT-112		ISI	-	c	-	-	-	-	-	-
E8.10	PEN. 2 (IN & OUT)		BOLTING, 10" BF	AUG	-	-	-	-	-	-	-	-
MC	CONT. PEN. BOLTING			OWN	-	-	-	-	-	-	-	-
				PRE	-	-	-	-	-	-	-	-

Category, ItemNO, Class	Summary / CompID / System	Scope / Method / Procedure	Iso No. Comp. Desc. Code Case		Period 1 97	Period 1 99	Period 1 00	Period 2 02	Period 2 03	Period 2 05	Period 3 06	Period 3 08
E-G	I903002	ISI/VT/VT-112		ISI	-	c	-	-	-	-	-	-
E8.10	PEN. 29		BOLTING, 20" BF	AUG	-	-	-	-	-	-	-	-
MC	CONT. PEN. BOLTING			OWN	-	-	-	-	-	-	-	-
				PRE	-	-	-	-	-	-	-	-
E-G	I903004	ISI/VT/VT-112		ISI	-	c	-	-	-	-	-	-
E8.10	PEN. 204 (IN & OUT)		BOLTING, 30" BF	AUG	-	-	-	-	-	-	-	-
MC	CONT. PEN. BOLTING			OWN	-	-	-	-	-	-	-	-
				PRE	-	-	-	-	-	-	-	-
E-G	I903006	ISI/VT/VT-112		ISI	-	c	-	-	-	-	-	-
E8.10	PEN. 300 (IN & OUT)		BOLTING, 36" BF	AUG	-	-	-	-	-	-	-	-
MC	CONT. PEN. BOLTING			OWN	-	-	-	-	-	-	-	-
				PRE	-	-	-	-	-	-	-	-
E-G	I903008	ISI/VT/VT-112		ISI	-	c	-	-	-	-	-	-
E8.10	PEN. 313		BOLTING, 6" BF	AUG	-	-	-	-	-	-	-	-
MC	CONT. PEN. BOLTING			OWN	-	-	-	-	-	-	-	-
				PRE	-	-	-	-	-	-	-	-
E-G	I903010	ISI/VT/VT-112		ISI	-	c	-	-	-	-	-	-
E8.10	PEN. 317		BOLTING, BF	AUG	-	-	-	-	-	-	-	-
MC	CONT. PEN. BOLTING			OWN	-	-	-	-	-	-	-	-
				PRE	-	-	-	-	-	-	-	-
E-G	I903012	ISI/VT/VT-112		ISI	-	c	-	-	-	-	-	-
E8.10	PEN. 1000 (IN & OUT)		BOLTING	AUG	-	-	-	-	-	-	-	-
MC	CONT. PEN. BOLTING			OWN	-	-	-	-	-	-	-	-
				PRE	-	-	-	-	-	-	-	-
E-G	I903014	ISI/VT/VT-112		ISI	-	c	-	-	-	-	-	-
E8.10	PEN. 2000 (IN & OUT)		BOLTING	AUG	-	-	-	-	-	-	-	-
MC	CONT. PEN. BOLTING			OWN	-	-	-	-	-	-	-	-
				PRE	-	-	-	-	-	-	-	-
E-G	I903100	ISI/VT/VT-112		ISI	-	c	-	-	-	-	-	-
E8.10	PEN. AE1		BOLTING, 16 - 1 1/8"	AUG	-	-	-	-	-	-	-	-
MC	ELECT. PEN. BOLTING			OWN	-	-	-	-	-	-	-	-
				PRE	-	-	-	-	-	-	-	-
E-G	I903102	ISI/VT/VT-112		ISI	-	c	-	-	-	-	-	-
E8.10	PEN. AE2		BOLTING, 16 - 1 1/8"	AUG	-	-	-	-	-	-	-	-
MC	ELECT. PEN. BOLTING			OWN	-	-	-	-	-	-	-	-
				PRE	-	-	-	-	-	-	-	-
E-G	I903104	ISI/VT/VT-112		ISI	-	c	-	-	-	-	-	-
E8.10	PEN. AE3		BOLTING, 16 - 1 1/8"	AUG	-	-	-	-	-	-	-	-
MC	ELECT. PEN. BOLTING			OWN	-	-	-	-	-	-	-	-
				PRE	-	-	-	-	-	-	-	-

Category, ItemNO, Class	Summary / CompID / System	Scope / Method / Procedure	Iso No. Comp. Desc. Code Case		Period 1 97	Period 1 99	Period 1 00	Period 2 02	Period 2 03	Period 2 05	Period 3 06	Period 3 08
E-G	I903106	ISI/VT/VT-112		ISI	-	c	-	-	-	-	-	-
E8.10	PEN. AE4		BOLTING, 16 - 1 1/8"	AUG	-	-	-	-	-	-	-	-
MC	ELECT. PEN. BOLTING			OWN	-	-	-	-	-	-	-	-
				PRE	-	-	-	-	-	-	-	-
E-G	I903108	ISI/VT/VT-112		ISI	-	c	-	-	-	-	-	-
E8.10	PEN. AE5		BOLTING, 16 - 1 1/8"	AUG	-	-	-	-	-	-	-	-
MC	ELECT. PEN. BOLTING			OWN	-	-	-	-	-	-	-	-
				PRE	-	-	-	-	-	-	-	-
E-G	I903110	ISI/VT/VT-112		ISI	-	c	-	-	-	-	-	-
E8.10	PEN. AE6		BOLTING, 16 - 1 1/8"	AUG	-	-	-	-	-	-	-	-
MC	ELECT. PEN. BOLTING			OWN	-	-	-	-	-	-	-	-
				PRE	-	-	-	-	-	-	-	-
E-G	I903112	ISI/VT/VT-112		ISI	-	c	-	-	-	-	-	-
E8.10	PEN. AE7		BOLTING, 16 - 1 1/8"	AUG	-	-	-	-	-	-	-	-
MC	ELECT. PEN. BOLTING			OWN	-	-	-	-	-	-	-	-
				PRE	-	-	-	-	-	-	-	-
E-G	I903114	ISI/VT/VT-112		ISI	-	c	-	-	-	-	-	-
E8.10	PEN. AE8		BOLTING, 16 - 1 1/8"	AUG	-	-	-	-	-	-	-	-
MC	ELECT. PEN. BOLTING			OWN	-	-	-	-	-	-	-	-
				PRE	-	-	-	-	-	-	-	-
E-G	I903116	ISI/VT/VT-112		ISI	-	c	-	-	-	-	-	-
E8.10	PEN. AE9		BOLTING, 16 - 1 1/8"	AUG	-	-	-	-	-	-	-	-
MC	ELECT. PEN. BOLTING			OWN	-	-	-	-	-	-	-	-
				PRE	-	-	-	-	-	-	-	-
E-G	I903118	ISI/VT/VT-112		ISI	-	c	-	-	-	-	-	-
E8.10	PEN. AE10		BOLTING, 16 - 1 1/8"	AUG	-	-	-	-	-	-	-	-
MC	ELECT. PEN. BOLTING			OWN	-	-	-	-	-	-	-	-
				PRE	-	-	-	-	-	-	-	-
E-G	I903120	ISI/VT/VT-112		ISI	-	c	-	-	-	-	-	-
E8.10	PEN. AE11		BOLTING, 16 - 1 1/8"	AUG	-	-	-	-	-	-	-	-
MC	ELECT. PEN. BOLTING			OWN	-	-	-	-	-	-	-	-
				PRE	-	-	-	-	-	-	-	-
E-G	I903122	ISI/VT/VT-112		ISI	-	-	-	-	-	s	-	-
E8.10	PEN. AE12		BOLTING, 16 - 1 1/8"	AUG	-	-	-	-	-	-	-	-
MC	ELECT. PEN. BOLTING			OWN	-	-	-	-	-	-	-	-
				PRE	-	-	-	-	-	-	-	-
E-G	I903124	ISI/VT/VT-112		ISI	-	-	-	-	-	s	-	-
E8.10	PEN. AE13		BOLTING, 16 - 1 1/8"	AUG	-	-	-	-	-	-	-	-
MC	ELECT. PEN. BOLTING			OWN	-	-	-	-	-	-	-	-
				PRE	-	-	-	-	-	-	-	-

Category, ItemNO, Class	Summary / CompID / System	Scope / Method / Procedure	Iso No. Comp. Desc. Code Case		Period 1 97	Period 1 99	Period 1 00	Period 2 02	Period 2 03	Period 2 05	Period 3 06	Period 3 08
E-G	I903126	ISI/VT/VT-112		ISI	-	-	-	-	-	s	-	-
E8.10	PEN. AE14		BOLTING, 16 - 1 1/8"	AUG	-	-	-	-	-	-	-	-
MC	ELECT. PEN. BOLTING			OWN	-	-	-	-	-	-	-	-
				PRE	-	-	-	-	-	-	-	-
E-G	I903128	ISI/VT/VT-112		ISI	-	-	-	-	-	s	-	-
E8.10	PEN. BE1		BOLTING, 16 - 1 1/8"	AUG	-	-	-	-	-	-	-	-
MC	ELECT. PEN. BOLTING			OWN	-	-	-	-	-	-	-	-
				PRE	-	-	-	-	-	-	-	-
E-G	I903130	ISI/VT/VT-112		ISI	-	-	-	-	-	s	-	-
E8.10	PEN. BE2		BOLTING, 16 - 1 1/8"	AUG	-	-	-	-	-	-	-	-
MC	ELECT. PEN. BOLTING			OWN	-	-	-	-	-	-	-	-
				PRE	-	-	-	-	-	-	-	-
E-G	I903132	ISI/VT/VT-112		ISI	-	-	-	-	-	s	-	-
E8.10	PEN. BE3		BOLTING, 16 - 1 1/8"	AUG	-	-	-	-	-	-	-	-
MC	ELECT. PEN. BOLTING			OWN	-	-	-	-	-	-	-	-
				PRE	-	-	-	-	-	-	-	-
E-G	I903134	ISI/VT/VT-112		ISI	-	-	-	-	-	s	-	-
E8.10	PEN. BE4		BOLTING, 16 - 1 1/8"	AUG	-	-	-	-	-	-	-	-
MC	ELECT. PEN. BOLTING			OWN	-	-	-	-	-	-	-	-
				PRE	-	-	-	-	-	-	-	-
E-G	I903136	ISI/VT/VT-112		ISI	-	-	-	-	-	s	-	-
E8.10	PEN. CE1		BOLTING, 16 - 1 1/8"	AUG	-	-	-	-	-	-	-	-
MC	ELECT. PEN. BOLTING			OWN	-	-	-	-	-	-	-	-
				PRE	-	-	-	-	-	-	-	-
E-G	I903138	ISI/VT/VT-112		ISI	-	-	-	-	-	s	-	-
E8.10	PEN. CE2		BOLTING, 16 - 1 1/8"	AUG	-	-	-	-	-	-	-	-
MC	ELECT. PEN. BOLTING			OWN	-	-	-	-	-	-	-	-
				PRE	-	-	-	-	-	-	-	-
E-G	I903140	ISI/VT/VT-112		ISI	-	-	-	-	-	-	s	-
E8.10	PEN. CE3		BOLTING, 16 - 1 1/8"	AUG	-	-	-	-	-	-	-	-
MC	ELECT. PEN. BOLTING			OWN	-	-	-	-	-	-	-	-
				PRE	-	-	-	-	-	-	-	-
E-G	I903142	ISI/VT/VT-112		ISI	-	-	-	-	-	-	s	-
E8.10	PEN. CE4		BOLTING, 16 - 1 1/8"	AUG	-	-	-	-	-	-	-	-
MC	ELECT. PEN. BOLTING			OWN	-	-	-	-	-	-	-	-
				PRE	-	-	-	-	-	-	-	-
E-G	I903144	ISI/VT/VT-112		ISI	-	-	-	-	-	-	s	-
E8.10	PEN. CE5		BOLTING, 16 - 1 1/8"	AUG	-	-	-	-	-	-	-	-
MC	ELECT. PEN. BOLTING			OWN	-	-	-	-	-	-	-	-
				PRE	-	-	-	-	-	-	-	-

Category, ItemNO, Class	Summary / CompID / System	Scope / Method / Procedure	Iso No. Comp. Desc. Code Case		Period 1 97	Period 1 99	Period 1 00	Period 2 02	Period 2 03	Period 2 05	Period 3 06	Period 3 08
E-G	I903146	ISI/VT/VT-112		ISI	-	-	-	-	-	-	s	-
E8.10	PEN. CE6		BOLTING, 16 - 1 1/8"	AUG	-	-	-	-	-	-	-	-
MC	ELECT. PEN. BOLTING			OWN	-	-	-	-	-	-	-	-
				PRE	-	-	-	-	-	-	-	-
E-G	I903148	ISI/VT/VT-112		ISI	-	-	-	-	-	-	s	-
E8.10	PEN. CE7		BOLTING, 16 - 1 1/8"	AUG	-	-	-	-	-	-	-	-
MC	ELECT. PEN. BOLTING			OWN	-	-	-	-	-	-	-	-
				PRE	-	-	-	-	-	-	-	-
E-G	I903150	ISI/VT/VT-112		ISI	-	-	-	-	-	-	s	-
E8.10	PEN. CE8		BOLTING, 16 - 1 1/8"	AUG	-	-	-	-	-	-	-	-
MC	ELECT. PEN. BOLTING			OWN	-	-	-	-	-	-	-	-
				PRE	-	-	-	-	-	-	-	-
E-G	I903152	ISI/VT/VT-112		ISI	-	-	-	-	-	-	s	-
E8.10	PEN. CE9		BOLTING, 16 - 1 1/8"	AUG	-	-	-	-	-	-	-	-
MC	ELECT. PEN. BOLTING			OWN	-	-	-	-	-	-	-	-
				PRE	-	-	-	-	-	-	-	-
E-G	I903156	ISI/VT/VT-112		ISI	-	-	-	-	-	s	-	-
E8.10	PEN. CE11		BOLTING, 16 - 1 1/8"	AUG	-	-	-	-	-	-	-	-
MC	ELECT. PEN. BOLTING			OWN	-	-	-	-	-	-	-	-
				PRE	-	-	-	-	-	-	-	-
E-G	I903158	ISI/VT/VT-112		ISI	-	-	-	-	-	s	-	-
E8.10	PEN. CE12		BOLTING, 16 - 1 1/8"	AUG	-	-	-	-	-	-	-	-
MC	ELECT. PEN. BOLTING			OWN	-	-	-	-	-	-	-	-
				PRE	-	-	-	-	-	-	-	-
E-G	I903160	ISI/VT/VT-112		ISI	-	-	-	-	-	s	-	-
E8.10	PEN. CE13		BOLTING, 16 - 1 1/8"	AUG	-	-	-	-	-	-	-	-
MC	ELECT. PEN. BOLTING			OWN	-	-	-	-	-	-	-	-
				PRE	-	-	-	-	-	-	-	-
E-G	I903162	ISI/VT/VT-112		ISI	-	-	-	-	-	s	-	-
E8.10	PEN. CE14		BOLTING, 16 - 1 1/8"	AUG	-	-	-	-	-	-	-	-
MC	ELECT. PEN. BOLTING			OWN	-	-	-	-	-	-	-	-
				PRE	-	-	-	-	-	-	-	-
E-G	I903164	ISI/VT/VT-112		ISI	-	-	-	-	-	s	-	-
E8.10	PEN. CE15		BOLTING, 16 - 1 1/8"	AUG	-	-	-	-	-	-	-	-
MC	ELECT. PEN. BOLTING			OWN	-	-	-	-	-	-	-	-
				PRE	-	-	-	-	-	-	-	-
E-G	I903166	ISI/VT/VT-112		ISI	-	-	-	-	-	s	-	-
E8.10	PEN. CE16		BOLTING, 16 - 1 1/8"	AUG	-	-	-	-	-	-	-	-
MC	ELECT. PEN. BOLTING			OWN	-	-	-	-	-	-	-	-
				PRE	-	-	-	-	-	-	-	-

Category, ItemNO, Class	Summary / CompID / System	Scope / Method / Procedure	Iso No. Comp. Desc. Code Case		Period 1 97	Period 1 99	Period 1 00	Period 2 02	Period 2 03	Period 2 05	Period 3 06	Period 3 08
E-G	I903168	ISI/VT/VT-112		ISI	-	-	-	-	-	s	-	-
E8.10	PEN. CE17		BOLTING, 16 - 1 1/8"	AUG	-	-	-	-	-	-	-	-
MC	ELECT. PEN. BOLTING			OWN	-	-	-	-	-	-	-	-
				PRE	-	-	-	-	-	-	-	-
E-G	I903170	ISI/VT/VT-112		ISI	-	-	-	-	-	s	-	-
E8.10	PEN. CE18		BOLTING, 16 - 1 1/8"	AUG	-	-	-	-	-	-	-	-
MC	ELECT. PEN. BOLTING			OWN	-	-	-	-	-	-	-	-
				PRE	-	-	-	-	-	-	-	-
E-G	I903172	ISI/VT/VT-112		ISI	-	-	-	-	-	s	-	-
E8.10	PEN. CE19		BOLTING, 16 - 1 1/8"	AUG	-	-	-	-	-	-	-	-
MC	ELECT. PEN. BOLTING			OWN	-	-	-	-	-	-	-	-
				PRE	-	-	-	-	-	-	-	-
E-G	I903174	ISI/VT/VT-112		ISI	-	-	-	-	-	s	-	-
E8.10	PEN. CE20		BOLTING, 16 - 1 1/8"	AUG	-	-	-	-	-	-	-	-
MC	ELECT. PEN. BOLTING			OWN	-	-	-	-	-	-	-	-
				PRE	-	-	-	-	-	-	-	-
E-G	I903176	ISI/VT/VT-112		ISI	-	-	-	-	-	s	-	-
E8.10	PEN. CE21		BOLTING, 16 - 1 1/8"	AUG	-	-	-	-	-	-	-	-
MC	ELECT. PEN. BOLTING			OWN	-	-	-	-	-	-	-	-
				PRE	-	-	-	-	-	-	-	-
E-G	I903178	ISI/VT/VT-112		ISI	-	-	-	-	-	-	s	-
E8.10	PEN. CE22		BOLTING, 16 - 1 1/8"	AUG	-	-	-	-	-	-	-	-
MC	ELECT. PEN. BOLTING			OWN	-	-	-	-	-	-	-	-
				PRE	-	-	-	-	-	-	-	-
E-G	I903180	ISI/VT/VT-112		ISI	-	-	-	-	-	-	s	-
E8.10	PEN. CE23		BOLTING, 16 - 1 1/8"	AUG	-	-	-	-	-	-	-	-
MC	ELECT. PEN. BOLTING			OWN	-	-	-	-	-	-	-	-
				PRE	-	-	-	-	-	-	-	-
E-G	I903182	ISI/VT/VT-112		ISI	-	-	-	-	-	-	s	-
E8.10	PEN. CE24		BOLTING, 16 - 1 1/8"	AUG	-	-	-	-	-	-	-	-
MC	ELECT. PEN. BOLTING			OWN	-	-	-	-	-	-	-	-
				PRE	-	-	-	-	-	-	-	-
E-G	I903184	ISI/VT/VT-112		ISI	-	-	-	-	-	-	s	-
E8.10	PEN. CE25		BOLTING, 16 - 1 1/8"	AUG	-	-	-	-	-	-	-	-
MC	ELECT. PEN. BOLTING			OWN	-	-	-	-	-	-	-	-
				PRE	-	-	-	-	-	-	-	-
E-G	I903186	ISI/VT/VT-112		ISI	-	-	-	-	-	-	s	-
E8.10	PEN. CE26		BOLTING, 16 - 1 1/8"	AUG	-	-	-	-	-	-	-	-
MC	ELECT. PEN. BOLTING			OWN	-	-	-	-	-	-	-	-
				PRE	-	-	-	-	-	-	-	-

Category, ItemNO, Class	Summary / CompID / System	Scope / Method / Procedure	Iso No. Comp. Desc. Code Case		Period 1 97	Period 1 99	Period 1 00	Period 2 02	Period 2 03	Period 2 05	Period 3 06	Period 3 08
E-G	I903188	ISI/VT/VT-112		ISI	-	-	-	-	-	-	s	-
E8.10	PEN. CE27		BOLTING, 16 - 1 1/8"	AUG	-	-	-	-	-	-	-	-
MC	ELECT. PEN. BOLTING			OWN	-	-	-	-	-	-	-	-
				PRE	-	-	-	-	-	-	-	-
E-G	I903190	ISI/VT/VT-112		ISI	-	-	-	-	-	-	s	-
E8.10	PEN. CE28		BOLTING, 16 - 1 1/8"	AUG	-	-	-	-	-	-	-	-
MC	ELECT. PEN. BOLTING			OWN	-	-	-	-	-	-	-	-
				PRE	-	-	-	-	-	-	-	-
E-G	I903192	ISI/VT/VT-112		ISI	-	-	-	-	-	-	s	-
E8.10	PEN. CE29		BOLTING, 16 - 1 1/8"	AUG	-	-	-	-	-	-	-	-
MC	ELECT. PEN. BOLTING			OWN	-	-	-	-	-	-	-	-
				PRE	-	-	-	-	-	-	-	-
E-G	I903194	ISI/VT/VT-112		ISI	-	-	-	-	-	-	s	-
E8.10	PEN. CE30		BOLTING, 16 - 1 1/8"	AUG	-	-	-	-	-	-	-	-
MC	ELECT. PEN. BOLTING			OWN	-	-	-	-	-	-	-	-
				PRE	-	-	-	-	-	-	-	-
E-G	I903196	ISI/VT/VT-112		ISI	-	-	-	-	-	-	s	-
E8.10	PEN. CE31		BOLTING, 16 - 1 1/8"	AUG	-	-	-	-	-	-	-	-
MC	ELECT. PEN. BOLTING			OWN	-	-	-	-	-	-	-	-
				PRE	-	-	-	-	-	-	-	-
E-G	I903198	ISI/VT/VT-112		ISI	-	-	-	-	-	-	s	-
E8.10	PEN. CE32		BOLTING, 16 - 1 1/8"	AUG	-	-	-	-	-	-	-	-
MC	ELECT. PEN. BOLTING			OWN	-	-	-	-	-	-	-	-
				PRE	-	-	-	-	-	-	-	-
E-G	I903200	ISI/VT/VT-112		ISI	-	-	-	-	-	-	s	-
E8.10	PEN. CE33		BOLTING, 16 - 1 1/8"	AUG	-	-	-	-	-	-	-	-
MC	ELECT. PEN. BOLTING			OWN	-	-	-	-	-	-	-	-
				PRE	-	-	-	-	-	-	-	-
E-G	I903202	ISI/VT/VT-112		ISI	-	-	-	-	-	-	s	-
E8.10	PEN. CE34		BOLTING, 16 - 1 1/8"	AUG	-	-	-	-	-	-	-	-
MC	ELECT. PEN. BOLTING			OWN	-	-	-	-	-	-	-	-
				PRE	-	-	-	-	-	-	-	-
E-G	I903500			ISI	-	-	-	-	-	-	-	-
E8.20	CONNECTIONS		BOLT TORQUE OR TENSION TESTS	AUG	-	-	-	-	-	-	-	-
MC	CONTAINMENT BOLTING			OWN	-	-	-	-	-	-	-	-
				PRE	-	-	-	-	-	-	-	-
E-P	I904000	ISI/VT/VT-109		ISI	-	c	B	-	B	b	b	b
E9.10	REPAIRS	ISI/VT/VT-109	CONTAINMENT VESSEL	AUG	-	-	-	-	-	-	-	-
MC	CONTAINMENT	ISI/VT/VT-109		OWN	-	-	-	-	-	-	-	-
				PRE	-	-	-	-	-	-	-	-

Category, ItemNO, Class	Summary / CompID / System	Scope / Method / Procedure	Iso No. Comp. Desc. Code Case		Period 1 97	Period 1 99	Period 1 00	Period 2 02	Period 2 03	Period 2 05	Period 3 06	Period 3 08
E-P	I904100	ISI/VT/VT-109		ISI	-	c	B	-	-	b	b	b
E9.20	BELLOWS	ISI/VT/VT-109	CONTAINMENT VESSEL	AUG	-	-	-	-	-	-	-	-
MC	CONTAINMENT			OWN	-	-	-	-	-	-	-	-
				PRE	-	-	-	-	-	-	-	-
E-P	I904200	ISI/VT/VT-109		ISI	-	c	B	B	-	b	b	b
E9.30	AIRLOCKS	ISI/VT/VT-109	CONTAINMENT VESSEL	AUG	-	-	-	-	-	-	-	-
MC	CONTAINMENT			OWN	-	-	-	-	-	-	-	-
				PRE	-	-	-	-	-	-	-	-
E-P	I904300	ISI/VT/VT-109		ISI	-	c	B	B	B	b	b	b
E9.40	SEALS AND GASKETS	ISI/VT/VT-109	CONTAINMENT VESSEL	AUG	-	-	-	-	-	-	-	-
MC	CONTAINMENT	ISI/VT/VT-109		OWN	-	-	-	-	-	-	-	-
				PRE	-	-	-	-	-	-	-	-
E-PC	I905000	ISI/VT/VT-112		ISI	-	-	-	c	-	t	t	t
PC-1	CONT. PAINT OR COATING	ISI/VT/VT-112	PAINT OR COATING PRIOR TO REMOVAL	AUG	-	-	-	-	-	-	-	-
MC	CONTAINMENT			OWN	-	-	-	-	-	-	-	-
				PRE	-	-	-	-	-	-	-	-
E-PC	I905001	ISI/VT/VT-112		ISI	-	-	-	-	-	s	-	b
PC-1	P29 Area	ISI/VT/VT-112	Paint/Coating Prior to Removal	AUG	-	-	-	-	-	-	-	-
MC	CONTAINMENT			OWN	-	-	-	-	-	-	-	-
				PRE	-	-	-	-	-	-	-	-
E-PC	I905002	ISI/VT/VT-112		ISI	-	-	-	-	c	b	-	-
PC-1	Sump A	ISI/VT/VT-112	Paint/Coating Prior to Removal	AUG	-	-	-	-	-	-	-	-
MC	CONTAINMENT			OWN	-	-	-	-	-	-	-	-
				PRE	-	-	-	-	-	-	-	-
E-PC	I906000	ISI/VT/VT-112		ISI	-	-	-	c	-	t	t	t
PC-2	CONT. PAINT OR COATING	ISI/VT/VT-112	APPLIED PAINT OR COATING	AUG	-	-	-	-	-	-	-	-
MC	CONTAINMENT			OWN	-	-	-	-	-	-	-	-
				PRE	-	-	-	-	-	-	-	-
E-PC	I906001	ISI/VT/VT-112		ISI	-	-	-	-	-	s	-	b
PC-2	P29 Area	ISI/VT/VT-112	Applied Paint/Coating	AUG	-	-	-	-	-	-	-	-
MC	CONTAINMENT			OWN	-	-	-	-	-	-	-	-
				PRE	-	-	-	-	-	-	-	-
E-PC	I906002	ISI/VT/VT-112		ISI	-	-	-	-	c	b	-	-
PC-2	Sump A	ISI/VT/VT-112	APPLIED PAINT OR COATING	AUG	-	-	-	-	-	-	-	-
MC	CONTAINMENT			OWN	-	-	-	-	-	-	-	-
				PRE	-	-	-	-	-	-	-	-
IN-EA	I900004			ISI	-	-	-	-	-	-	-	-
E1.11	SUMP B LINER		CONTAINMENT SUMP B LINER	AUG	-	-	-	-	-	-	-	-
MC	CONTAINMENT			OWN	-	-	-	-	-	-	-	-
				PRE	-	-	-	-	-	-	-	-

Category, ItemNO, Class	Summary / CompID / System	Scope / Method / Procedure	Iso No. Comp. Desc. Code Case		Period 1 97	Period 1 99	Period 1 00	Period 2 02	Period 2 03	Period 2 05	Period 3 06	Period 3 08
IN-EA	I900080			ISI	-	-	-	-	-	-	-	-
E1.11	PEN. 141		PEN 141 RHR PUMP A SUCTION FM SUMP B	AUG	-	-	-	-	-	-	-	-
MC	MECHANICAL PEN.			OWN	-	-	-	-	-	-	-	-
				PRE	-	-	-	-	-	-	-	-
IN-EA	I900082			ISI	-	-	-	-	-	-	-	-
E1.11	PEN. 142		PEN 142 RHR PUMP B SUCTION FM SUMP B	AUG	-	-	-	-	-	-	-	-
MC	MECHANICAL PEN.			OWN	-	-	-	-	-	-	-	-
				PRE	-	-	-	-	-	-	-	-
IN-EA	I900084			ISI	-	-	-	-	-	-	-	-
E1.11	PEN. 143		PEN 143 RC DRAIN TANK DISCH. LINE	AUG	-	-	-	-	-	-	-	-
MC	MECHANICAL PEN.			OWN	-	-	-	-	-	-	-	-
				PRE	-	-	-	-	-	-	-	-
IN-EA	I900256			ISI	-	-	-	-	-	-	-	-
E1.11	PEN. CE26		PEN CE26 ELECTRICAL PEN.	AUG	-	-	-	-	-	-	-	-
MC	ELECTRICAL PEN.			OWN	-	-	-	-	-	-	-	-
				PRE	-	-	-	-	-	-	-	-
IN-EA	I900260			ISI	-	-	-	-	-	-	-	-
E1.11	PEN. CE28		PEN CE28 ELECTRICAL PEN.	AUG	-	-	-	-	-	-	-	-
MC	ELECTRICAL PEN.			OWN	-	-	-	-	-	-	-	-
				PRE	-	-	-	-	-	-	-	-
IN-EA	I900604			ISI	-	-	-	-	-	-	-	-
E1.12	SUMP B LINER		CONTAINMENT SUMP B LINER	AUG	-	-	-	-	-	-	-	-
MC	CONTAINMENT			OWN	-	-	-	-	-	-	-	-
				PRE	-	-	-	-	-	-	-	-
IN-EA	I900680			ISI	-	-	-	-	-	-	-	-
E1.12	PEN. 141		PEN 141 RHR PUMP A SUCTION FM SUMP B	AUG	-	-	-	-	-	-	-	-
MC	MECHANICAL PEN.			OWN	-	-	-	-	-	-	-	-
				PRE	-	-	-	-	-	-	-	-
IN-EA	I900682			ISI	-	-	-	-	-	-	-	-
E1.12	PEN. 142		PEN 142 RHR PUMP B SUCTION FM PUMP B	AUG	-	-	-	-	-	-	-	-
MC	MECHANICAL PEN.			OWN	-	-	-	-	-	-	-	-
				PRE	-	-	-	-	-	-	-	-
IN-EA	I900684			ISI	-	-	-	-	-	-	-	-
E1.12	PEN. 143		PEN 143 RC DRAIN TANK DISCH. LINE	AUG	-	-	-	-	-	-	-	-
MC	MECHANICAL PEN.			OWN	-	-	-	-	-	-	-	-
				PRE	-	-	-	-	-	-	-	-
IN-EA	I900856			ISI	-	-	-	-	-	-	-	-
E1.12	PEN. CE26		PEN CE26 ELECTRICAL PEN	AUG	-	-	-	-	-	-	-	-
MC	ELECTRICAL PEN.			OWN	-	-	-	-	-	-	-	-
				PRE	-	-	-	-	-	-	-	-

Category, ItemNO, Class	Summary / CompID / System	Scope / Method / Procedure	Iso No. Comp. Desc. Code Case		Period 1 97	Period 1 99	Period 1 00	Period 2 02	Period 2 03	Period 2 05	Period 3 06	Period 3 08
IN-EA	I900860			ISI	-	-	-	-	-	-	-	-
E1.12	PEN. CE28		PEN CE28 ELECTRICAL PEN	AUG	-	-	-	-	-	-	-	-
MC	ELECTRICAL PEN.			OWN	-	-	-	-	-	-	-	-
				PRE	-	-	-	-	-	-	-	-
IN-ED	I902100			ISI	-	-	-	-	-	-	-	-
E5.30	SUMP A		MOISTURE BARRIER	AUG	-	-	-	-	-	-	-	-
MC	MOISTURE BARRIER			OWN	-	-	-	-	-	-	-	-
				PRE	-	-	-	-	-	-	-	-
IN-ED	I902200			ISI	-	-	-	-	-	-	-	-
E5.30	SUMP B		MOISTURE BARRIER	AUG	-	-	-	-	-	-	-	-
MC	MOISTURE BARRIER			OWN	-	-	-	-	-	-	-	-
				PRE	-	-	-	-	-	-	-	-
IN-EG	I903154			ISI	-	-	-	-	-	-	-	-
E8.10	PEN. CE10 (CAPPED)		BOLTING, 16 - 1 1/8"	AUG	-	-	-	-	-	-	-	-
MC	ELECT. PEN. BOLTING			OWN	-	-	-	-	-	-	-	-
				PRE	-	-	-	-	-	-	-	-
L-A	I950000	ISI/VT/VT-113		ISI	-	-	r	c	-	b	-	-
L1.11	DOOME, TENDONS & AREAS	PSI/VT/VT-113	CONCRETE SURFACE ALL AREAS	AUG	-	-	-	-	-	-	-	-
CC	CONTAINMENT	ISI/VT/VT-113		OWN	-	-	-	-	-	-	-	-
		ISI/VT/VT-113		PRE	-	-	-	c	-	-	-	-
L-A	I950010	ISI/VT/VT-113		ISI	-	-	r	c	-	b	-	-
L1.11	EQUIPMENT HATCH AREAS	ISI/VT/VT-113	CONCRETE SURFACE ALL AREAS	AUG	-	-	-	-	-	-	-	-
CC	CONTAINMENT			OWN	-	-	-	-	-	-	-	-
				PRE	-	-	-	-	-	-	-	-
L-A	I950020	ISI/VT/VT-113		ISI	-	-	r	c	-	b	-	-
L1.11	SUB-BASEMENT @ 237-0 & 238	ISI/VT/VT-113	INT. BLDG. SOUTH (RAD AREA) CONCRETE SURFACE	AUG	-	-	-	-	-	-	-	-
CC	CONTAINMENT			OWN	-	-	-	-	-	-	-	-
				PRE	-	-	-	-	-	-	-	-
L-A	I950030	ISI/VT/VT-113		ISI	-	-	r	c	-	b	-	-
L1.11	BASEMENT @ 253-6	ISI/VT/VT-113	INT. BLDG. SOUTH (RAD AREA) CONCRETE SURFACE	AUG	-	-	-	-	-	-	-	-
CC	CONTAINMENT			OWN	-	-	-	-	-	-	-	-
				PRE	-	-	-	-	-	-	-	-
L-A	I950040	ISI/VT/VT-113		ISI	-	-	r	c	-	b	-	-
L1.11	PLATFORM @ 267-3	ISI/VT/VT-113	INT. BLDG. SOUTH (RAD AREA) CONCRETE SURFACE	AUG	-	-	-	-	-	-	-	-
CC	CONTAINMENT			OWN	-	-	-	-	-	-	-	-
				PRE	-	-	-	-	-	-	-	-
L-A	I950050	ISI/VT/VT-113		ISI	-	-	r	c	-	b	-	-
L1.11	FLOOR @ 271-0 (RP DESK AREA)	ISI/VT/VT-113	INT. BLDG. SOUTH (RAD AREA) CONCRETE SURFACE	AUG	-	-	-	-	-	-	-	-
CC	CONTAINMENT			OWN	-	-	-	-	-	-	-	-
				PRE	-	-	-	-	-	-	-	-

Category, ItemNO, Class	Summary / CompID / System	Scope / Method / Procedure	Iso No. Comp. Desc. Code Case		Period 1 97	Period 1 99	Period 1 00	Period 2 02	Period 2 03	Period 2 05	Period 3 06	Period 3 08
L-A	I950060	ISI/VT/VT-113		ISI	-	-	r	c	-	b	-	-
L1.11	FLOOR @ 293-0	ISI/VT/VT-113	INT. BLDG. SOUTH (RAD AREA) CONCRETE SURFACE	AUG	-	-	-	-	-	-	-	-
CC	CONTAINMENT			OWN	-	-	-	-	-	-	-	-
				PRE	-	-	-	-	-	-	-	-
L-A	I950070	ISI/VT/VT-113		ISI	-	-	r	c	-	b	-	-
L1.11	ROOFTOP @ 318-0(IB LOW ROOF)	ISI/VT/VT-113	INT. BLDG. SOUTH (RAD AREA) CONCRETE SURFACE	AUG	-	-	-	-	-	-	-	-
CC	CONTAINMENT			OWN	-	-	-	-	-	-	-	-
				PRE	-	-	-	-	-	-	-	-
L-A	I950080	ISI/VT/VT-113		ISI	-	-	r	c	-	b	-	-
L1.11	BASEMENT @ 253-6	ISI/VT/VT-113	SURFACE	AUG	-	-	-	-	-	-	-	-
CC	CONTAINMENT			OWN	-	-	-	-	-	-	-	-
				PRE	-	-	-	-	-	-	-	-
L-A	I950090	ISI/VT/VT-113		ISI	-	-	r	c	-	b	-	-
L1.11	PLATFORM @ 267-3	ISI/VT/VT-113	SURFACE	AUG	-	-	-	-	-	-	-	-
CC	CONTAINMENT			OWN	-	-	-	-	-	-	-	-
				PRE	-	-	-	-	-	-	-	-
L-A	I950100	ISI/VT/VT-113		ISI	-	-	r	c	-	b	-	-
L1.11	FLOOR @ 267-3	ISI/VT/VT-113	SURFACE	AUG	-	-	-	-	-	-	-	-
CC	CONTAINMENT			OWN	-	-	-	-	-	-	-	-
				PRE	-	-	-	-	-	-	-	-
L-A	I950110	ISI/VT/VT-113		ISI	-	-	r	c	-	b	-	-
L1.11	FLOOR @ 298-4	ISI/VT/VT-113	SURFACE	AUG	-	-	-	-	-	-	-	-
CC	CONTAINMENT			OWN	-	-	-	-	-	-	-	-
				PRE	-	-	-	-	-	-	-	-
L-A	I950120	ISI/VT/VT-113		ISI	-	-	r	c	-	b	-	-
L1.11	FLOOR @ 315-4	ISI/VT/VT-113	SURFACE	AUG	-	-	-	-	-	-	-	-
CC	CONTAINMENT			OWN	-	-	-	-	-	-	-	-
				PRE	-	-	-	-	-	-	-	-
L-A	I950130	ISI/VT/VT-113		ISI	-	-	r	c	-	b	-	-
L1.11	ROOFTOP @ 336-6 (IB HIGH ROOF)	ISI/VT/VT-113	SURFACE	AUG	-	-	-	-	-	-	-	-
CC	CONTAINMENT			OWN	-	-	-	-	-	-	-	-
				PRE	-	-	-	-	-	-	-	-
L-A	I950140	ISI/VT/VT-113		ISI	-	-	r	c	-	b	-	-
L1.11	BASEMENT FLOOR @ 258-8	ISI/VT/VT-113	AUX. BLDG. CONCRETE SURFACES	AUG	-	-	-	-	-	-	-	-
CC	CONTAINMENT			OWN	-	-	-	-	-	-	-	-
				PRE	-	-	-	-	-	-	-	-
L-A	I950150	ISI/VT/VT-113		ISI	-	-	r	c	-	b	-	-
L1.11	INTERMEDIATE FLOOR @ 253-0	ISI/VT/VT-113	AUX. BLDG. CONCRETE SURFACES	AUG	-	-	-	-	-	-	-	-
CC	CONTAINMENT			OWN	-	-	-	-	-	-	-	-
				PRE	-	-	-	-	-	-	-	-

Category, ItemNO, Class	Summary / CompID / System	Scope / Method / Procedure	Iso No. Comp. Desc. Code Case		Period 1 97	Period 1 99	Period 1 00	Period 2 02	Period 2 03	Period 2 05	Period 3 06	Period 3 08
L-A	I950160	ISI/VT/VT-113		ISI	-	-	r	c	-	b	-	-
L1.11	OPERATING FLOOR @ 271-0	ISI/VT/VT-113	AUX. BLDG. CONCRETE SURFACES	AUG	-	-	-	-	-	-	-	-
CC	CONTAINMENT			OWN	-	-	-	-	-	-	-	-
				PRE	-	-	-	-	-	-	-	-
L-A	I950170	ISI/VT/VT-113		ISI	-	-	r	c	-	b	-	-
L1.11	PLATFORM @ 311-6	ISI/VT/VT-113	AUX. BLDG. CONCRETE SURFACES	AUG	-	-	-	-	-	-	-	-
CC	CONTAINMENT			OWN	-	-	-	-	-	-	-	-
				PRE	-	-	-	-	-	-	-	-
L-A	I951000	ISI/VT/VT-113		ISI	-	-	r	c	-	b	-	-
L1.12	DOME, TENDONS & AREAS	ISI/VT/VT-113	CONCRETE SURFACE ALL AREAS	AUG	-	-	-	-	-	-	-	-
CC	CONTAINMENT			OWN	-	-	-	-	-	-	-	-
				PRE	-	-	-	-	-	-	-	-
L-A	I951010	ISI/VT/VT-113		ISI	-	-	r	c	-	b	-	-
L1.12	EQUIPMENT HATCH AREAS	ISI/VT/VT-113	CONCRETE SURFACE ALL AREAS	AUG	-	-	-	-	-	-	-	-
CC	CONTAINMENT			OWN	-	-	-	-	-	-	-	-
				PRE	-	-	-	-	-	-	-	-
L-A	I951020	ISI/VT/VT-113		ISI	-	-	r	c	-	b	-	-
L1.12	SUB-BASEMENT @ 237-0 & 238-6	ISI/VT/VT-113	INT. BLDG. SOUTH (RAD AREA) CONCRETE SURFACE	AUG	-	-	-	-	-	-	-	-
CC	CONTAINMENT			OWN	-	-	-	-	-	-	-	-
				PRE	-	-	-	-	-	-	-	-
L-A	I951030	ISI/VT/VT-113		ISI	-	-	r	-	-	t	-	-
L1.12	BASEMENT @ 253-6	ISI/VT/VT-113	INT. BLDG. SOUTH (RAD AREA) CONCRETE SURFACE	AUG	-	-	-	-	-	-	-	-
CC	CONTAINMENT			OWN	-	-	-	-	-	-	-	-
				PRE	-	-	-	-	-	-	-	-
L-A	I951040	ISI/VT/VT-113		ISI	-	-	r	-	-	t	-	-
L1.12	PLATFORM @ 267-3	ISI/VT/VT-113	INT. BLDG. SOUTH (RAD AREA) CONCRETE SURFACE	AUG	-	-	-	-	-	-	-	-
CC	CONTAINMENT			OWN	-	-	-	-	-	-	-	-
				PRE	-	-	-	-	-	-	-	-
L-A	I951050	ISI/VT/VT-113		ISI	-	-	r	c	-	b	-	-
L1.12	FLOOR @ 271- 0 (RP DESK AREA)	ISI/VT/VT-113	INT. BLDG. SOUTH (RAD AREA) CONCRETE SURFACE	AUG	-	-	-	-	-	-	-	-
CC	CONTAINMENT			OWN	-	-	-	-	-	-	-	-
				PRE	-	-	-	-	-	-	-	-
L-A	I951060	ISI/VT/VT-113		ISI	-	-	r	c	-	b	-	-
L1.12	FLOOR @ 293 -0	ISI/VT/VT-113	INT. BLDG. SOUTH (RAD AREA) CONCRETE SURFACE	AUG	-	-	-	-	-	-	-	-
CC	CONTAINMENT			OWN	-	-	-	-	-	-	-	-
				PRE	-	-	-	-	-	-	-	-
L-A	I951070	ISI/VT/VT-113		ISI	-	-	r	c	-	b	-	-
L1.12	ROOFTOP @ 318-0 (IB LOW ROOF)	ISI/VT/VT-113	INT. BLDG. SOUTH (RAD AREA) CONCRETE SURFACE	AUG	-	-	-	-	-	-	-	-
CC	CONTAINMENT			OWN	-	-	-	-	-	-	-	-
				PRE	-	-	-	-	-	-	-	-

Category, ItemNO, Class	Summary / CompID / System	Scope / Method / Procedure	Iso No. Comp. Desc. Code Case		Period 1 97	Period 1 99	Period 1 00	Period 2 02	Period 2 03	Period 2 05	Period 3 06	Period 3 08
L-A	I951080	ISI/VT/VT-113		ISI	-	-	r	c	-	b	-	-
L1.12	BASEMENT @ 253-6	ISI/VT/VT-113	SURFACE	AUG	-	-	-	-	-	-	-	-
CC	CONTAINMENT			OWN	-	-	-	-	-	-	-	-
				PRE	-	-	-	-	-	-	-	-
L-A	I951090	ISI/VT/VT-113		ISI	-	-	r	c	-	b	-	-
L1.12	PLATFORM @ 267-3	ISI/VT/VT-113	SURFACE	AUG	-	-	-	-	-	-	-	-
CC	CONTAINMENT			OWN	-	-	-	-	-	-	-	-
				PRE	-	-	-	-	-	-	-	-
L-A	I951100	ISI/VT/VT-113		ISI	-	-	r	c	-	b	-	-
L1.12	FLOOR @ 267-3	ISI/VT/VT-113	SURFACE	AUG	-	-	-	-	-	-	-	-
CC	CONTAINMENT			OWN	-	-	-	-	-	-	-	-
				PRE	-	-	-	-	-	-	-	-
L-A	I951110	ISI/VT/VT-113		ISI	-	-	r	c	-	b	-	-
L1.12	FLOOR @ 298-4	ISI/VT/VT-113	SURFACE	AUG	-	-	-	-	-	-	-	-
CC	CONTAINMENT			OWN	-	-	-	-	-	-	-	-
				PRE	-	-	-	-	-	-	-	-
L-A	I951120	ISI/VT/VT-113		ISI	-	-	r	c	-	b	-	-
L1.12	FLOOR @ 315-4	ISI/VT/VT-113	SURFACE	AUG	-	-	-	-	-	-	-	-
CC	CONTAINMENT			OWN	-	-	-	-	-	-	-	-
				PRE	-	-	-	-	-	-	-	-
L-A	I951130	ISI/VT/VT-113		ISI	-	-	r	c	-	b	-	-
L1.12	ROOFTOP @ 336-6(IB HIGH ROOF)	ISI/VT/VT-113	SURFACE	AUG	-	-	-	-	-	-	-	-
CC	CONTAINMENT			OWN	-	-	-	-	-	-	-	-
				PRE	-	-	-	-	-	-	-	-
L-A	I951140	ISI/VT/VT-113		ISI	-	-	r	c	-	b	-	-
L1.12	BASEMENT FLOOR @ 258-8	ISI/VT/VT-113	AUX. BLDG. CONCRETE SURFACES	AUG	-	-	-	-	-	-	-	-
CC	CONTAINMENT			OWN	-	-	-	-	-	-	-	-
				PRE	-	-	-	-	-	-	-	-
L-A	I951150	ISI/VT/VT-113		ISI	-	-	r	c	-	b	-	-
L1.12	INTERMEDIATE FLOOR @ 253-0	ISI/VT/VT-113	AUX. BLDG. CONCRETE SURFACES	AUG	-	-	-	-	-	-	-	-
CC	CONTAINMENT			OWN	-	-	-	-	-	-	-	-
				PRE	-	-	-	-	-	-	-	-
L-A	I951160	ISI/VT/VT-113		ISI	-	-	r	c	-	b	-	-
L1.12	OPERATING FLOOR @ 271-0	ISI/VT/VT-113	AUX. BLDG. CONCRETE SURFACES	AUG	-	-	-	-	-	-	-	-
CC	CONTAINMENT			OWN	-	-	-	-	-	-	-	-
				PRE	-	-	-	-	-	-	-	-
L-A	I951170	ISI/VT/VT-113		ISI	-	-	r	c	-	b	-	-
L1.12	PLATFORM @ 311-6	ISI/VT/VT-113	AUX. BLDG. CONCRETE SURFACES	AUG	-	-	-	-	-	-	-	-
CC	CONTAINMENT			OWN	-	-	-	-	-	-	-	-
				PRE	-	-	-	-	-	-	-	-

Category, ItemNO, Class	Summary / CompID / System	Scope / Method / Procedure	Iso No. Comp. Desc. Code Case		Period 1 97	Period 1 99	Period 1 00	Period 2 02	Period 2 03	Period 2 05	Period 3 06	Period 3 08
L-B	I952001			ISI	-	-	-	-	-	-	-	-
L2.10	#1		TENDON	AUG	-	-	-	-	-	-	-	-
CC	CONTAINMENT			OWN	-	-	-	-	-	-	-	-
				PRE	-	-	-	-	-	-	-	-
L-B	I952002	ISI/VT/FT		ISI	-	-	r	c	-	-	-	-
L2.10	#2		TENDON	AUG	-	-	-	-	-	-	-	-
CC	CONTAINMENT			OWN	-	-	-	-	-	-	-	-
				PRE	-	-	-	-	-	-	-	-
L-B	I952003			ISI	-	-	-	-	-	-	-	-
L2.10	#3		TENDON	AUG	-	-	-	-	-	-	-	-
CC	CONTAINMENT			OWN	-	-	-	-	-	-	-	-
				PRE	-	-	-	-	-	-	-	-
L-B	I952004	ISI/VT/FT		ISI	-	-	r	c	-	-	-	-
L2.10	#4		TENDON	AUG	-	-	-	-	-	-	-	-
CC	CONTAINMENT			OWN	-	-	-	-	-	-	-	-
				PRE	-	-	-	-	-	-	-	-
L-B	I952005	ISI/VT/FT		ISI	-	-	-	-	-	s	-	-
L2.10	#5		TENDON	AUG	-	-	-	-	-	-	-	-
CC	CONTAINMENT			OWN	-	-	-	-	-	-	-	-
				PRE	-	-	-	-	-	-	-	-
L-B	I952006			ISI	-	-	-	-	-	-	-	-
L2.10	#6		TENDON	AUG	-	-	-	-	-	-	-	-
CC	CONTAINMENT			OWN	-	-	-	-	-	-	-	-
				PRE	-	-	-	-	-	-	-	-
L-B	I952007			ISI	-	-	-	-	-	-	-	-
L2.10	#7		TENDON	AUG	-	-	-	-	-	-	-	-
CC	CONTAINMENT			OWN	-	-	-	-	-	-	-	-
				PRE	-	-	-	-	-	-	-	-
L-B	I952008			ISI	-	-	-	-	-	-	-	-
L2.10	#8		TENDON	AUG	-	-	-	-	-	-	-	-
CC	CONTAINMENT			OWN	-	-	-	-	-	-	-	-
				PRE	-	-	-	-	-	-	-	-
L-B	I952009	ISI/VT/FT		ISI	-	-	r	c	-	-	-	-
L2.10	#9		TENDON	AUG	-	-	-	-	-	-	-	-
CC	CONTAINMENT			OWN	-	-	-	-	-	-	-	-
				PRE	-	-	-	-	-	-	-	-
L-B	I952010	ISI/VT/FT		ISI	-	-	r	c	-	-	-	-
L2.10	#10		TENDON	AUG	-	-	-	-	-	-	-	-
CC	CONTAINMENT			OWN	-	-	-	-	-	-	-	-
				PRE	-	-	-	-	-	-	-	-

Category, ItemNO, Class	Summary / CompID / System	Scope / Method / Procedure	Iso No. Comp. Desc. Code Case		Period 1 97	Period 1 99	Period 1 00	Period 2 02	Period 2 03	Period 2 05	Period 3 06	Period 3 08
L-B	I952011			ISI	-	-	-	-	-	-	-	-
L2.10	#11		TENDON	AUG	-	-	-	-	-	-	-	-
CC	CONTAINMENT			OWN	-	-	-	-	-	-	-	-
				PRE	-	-	-	-	-	-	-	-
L-B	I952012			ISI	-	-	-	-	-	-	-	-
L2.10	#12		TENDON	AUG	-	-	-	-	-	-	-	-
CC	CONTAINMENT			OWN	-	-	-	-	-	-	-	-
				PRE	-	-	-	-	-	-	-	-
L-B	I952013			ISI	-	-	-	-	-	-	-	-
L2.10	#13		TENDON	AUG	-	-	-	-	-	-	-	-
CC	CONTAINMENT			OWN	-	-	-	-	-	-	-	-
				PRE	-	-	-	-	-	-	-	-
L-B	I952014	ISI/VT/FT		ISI	-	-	-	-	-	s	-	-
L2.10	#14		TENDON	AUG	-	-	-	-	-	-	-	-
CC	CONTAINMENT			OWN	-	-	-	-	-	-	-	-
				PRE	-	-	-	-	-	-	-	-
L-B	I952015			ISI	-	-	-	-	-	-	-	-
L2.10	#15		TENDON	AUG	-	-	-	-	-	-	-	-
CC	CONTAINMENT			OWN	-	-	-	-	-	-	-	-
				PRE	-	-	-	-	-	-	-	-
L-B	I952016	ISI/VT/FT		ISI	-	-	-	-	-	s	-	-
L2.10	#16		TENDON	AUG	-	-	-	-	-	-	-	-
CC	CONTAINMENT			OWN	-	-	-	-	-	-	-	-
				PRE	-	-	-	-	-	-	-	-
L-B	I952017			ISI	-	-	-	-	-	-	-	-
L2.10	#17		TENDON	AUG	-	-	-	-	-	-	-	-
CC	CONTAINMENT			OWN	-	-	-	-	-	-	-	-
				PRE	-	-	-	-	-	-	-	-
L-B	I952018			ISI	-	-	-	-	-	-	-	-
L2.10	#18		TENDON	AUG	-	-	-	-	-	-	-	-
CC	CONTAINMENT			OWN	-	-	-	-	-	-	-	-
				PRE	-	-	-	-	-	-	-	-
L-B	I952019			ISI	-	-	-	-	-	-	-	-
L2.10	#19		TENDON	AUG	-	-	-	-	-	-	-	-
CC	CONTAINMENT			OWN	-	-	-	-	-	-	-	-
				PRE	-	-	-	-	-	-	-	-
L-B	I952020			ISI	-	-	-	-	-	-	-	-
L2.10	#20		TENDON	AUG	-	-	-	-	-	-	-	-
CC	CONTAINMENT			OWN	-	-	-	-	-	-	-	-
				PRE	-	-	-	-	-	-	-	-

Category, ItemNO, Class	Summary / CompID / System	Scope / Method / Procedure	Iso No. Comp. Desc. Code Case		Period 1 97	Period 1 99	Period 1 00	Period 2 02	Period 2 03	Period 2 05	Period 3 06	Period 3 08
L-B	I952021			ISI	-	-	-	-	-	-	-	-
L2.10	#21		TENDON	AUG	-	-	-	-	-	-	-	-
CC	CONTAINMENT			OWN	-	-	-	-	-	-	-	-
				PRE	-	-	-	-	-	-	-	-
L-B	I952022			ISI	-	-	-	-	-	-	-	-
L2.10	#22		TENDON	AUG	-	-	-	-	-	-	-	-
CC	CONTAINMENT			OWN	-	-	-	-	-	-	-	-
				PRE	-	-	-	-	-	-	-	-
L-B	I952023			ISI	-	-	-	-	-	-	-	-
L2.10	#23		TENDON	AUG	-	-	-	-	-	-	-	-
CC	CONTAINMENT			OWN	-	-	-	-	-	-	-	-
				PRE	-	-	-	-	-	-	-	-
L-B	I952024			ISI	-	-	-	-	-	-	-	-
L2.10	#24		TENDON	AUG	-	-	-	-	-	-	-	-
CC	CONTAINMENT			OWN	-	-	-	-	-	-	-	-
				PRE	-	-	-	-	-	-	-	-
L-B	I952025			ISI	-	-	-	-	-	-	-	-
L2.10	#25		TENDON	AUG	-	-	-	-	-	-	-	-
CC	CONTAINMENT			OWN	-	-	-	-	-	-	-	-
				PRE	-	-	-	-	-	-	-	-
L-B	I952026			ISI	-	-	-	-	-	-	-	-
L2.10	#26		TENDON	AUG	-	-	-	-	-	-	-	-
CC	CONTAINMENT			OWN	-	-	-	-	-	-	-	-
				PRE	-	-	-	-	-	-	-	-
L-B	I952027			ISI	-	-	-	-	-	-	-	-
L2.10	#27		TENDON	AUG	-	-	-	-	-	-	-	-
CC	CONTAINMENT			OWN	-	-	-	-	-	-	-	-
				PRE	-	-	-	-	-	-	-	-
L-B	I952028			ISI	-	-	-	-	-	-	-	-
L2.10	#28		TENDON	AUG	-	-	-	-	-	-	-	-
CC	CONTAINMENT			OWN	-	-	-	-	-	-	-	-
				PRE	-	-	-	-	-	-	-	-
L-B	I952029			ISI	-	-	-	-	-	-	-	-
L2.10	#29		TENDON	AUG	-	-	-	-	-	-	-	-
CC	CONTAINMENT			OWN	-	-	-	-	-	-	-	-
				PRE	-	-	-	-	-	-	-	-
L-B	I952030	ISI/VT/FT		ISI	-	-	-	-	-	s	-	-
L2.10	#30		TENDON	AUG	-	-	-	-	-	-	-	-
CC	CONTAINMENT			OWN	-	-	-	-	-	-	-	-
				PRE	-	-	-	-	-	-	-	-

Category, ItemNO, Class	Summary / CompID / System	Scope / Method / Procedure	Iso No. Comp. Desc. Code Case		Period 1 97	Period 1 99	Period 1 00	Period 2 02	Period 2 03	Period 2 05	Period 3 06	Period 3 08
L-B	I952031			ISI	-	-	-	-	-	-	-	-
L2.10	#31		TENDON	AUG	-	-	-	-	-	-	-	-
CC	CONTAINMENT			OWN	-	-	-	-	-	-	-	-
				PRE	-	-	-	-	-	-	-	-
L-B	I952032	ISI/VT/FT		ISI	-	-	-	-	-	s	-	-
L2.10	#32		TENDON	AUG	-	-	-	-	-	-	-	-
CC	CONTAINMENT			OWN	-	-	-	-	-	-	-	-
				PRE	-	-	-	-	-	-	-	-
L-B	I952033	ISI/VT/FT		ISI	-	-	-	-	-	s	-	-
L2.10	#33		TENDON	AUG	-	-	-	-	-	-	-	-
CC	CONTAINMENT			OWN	-	-	-	-	-	-	-	-
				PRE	-	-	-	-	-	-	-	-
L-B	I952034	ISI/VT/FT		ISI	-	-	-	-	-	s	-	-
L2.10	#34		TENDON	AUG	-	-	-	-	-	-	-	-
CC	CONTAINMENT			OWN	-	-	-	-	-	-	-	-
				PRE	-	-	-	-	-	-	-	-
L-B	I952035	ISI/VT/FT		ISI	-	-	-	-	-	s	-	-
L2.10	#35		TENDON	AUG	-	-	-	-	-	-	-	-
CC	CONTAINMENT			OWN	-	-	-	-	-	-	-	-
				PRE	-	-	-	-	-	-	-	-
L-B	I952036	ISI/VT/FT		ISI	-	-	-	-	-	s	-	-
L2.10	#36		TENDON	AUG	-	-	-	-	-	-	-	-
CC	CONTAINMENT			OWN	-	-	-	-	-	-	-	-
				PRE	-	-	-	-	-	-	-	-
L-B	I952037	ISI/VT/FT		ISI	-	-	-	-	-	s	-	-
L2.10	#37		TENDON	AUG	-	-	-	-	-	-	-	-
CC	CONTAINMENT			OWN	-	-	-	-	-	-	-	-
				PRE	-	-	-	-	-	-	-	-
L-B	I952038	ISI/VT/FT		ISI	-	-	-	-	-	s	-	-
L2.10	#38		TENDON	AUG	-	-	-	-	-	-	-	-
CC	CONTAINMENT			OWN	-	-	-	-	-	-	-	-
				PRE	-	-	-	-	-	-	-	-
L-B	I952039	ISI/VT/FT		ISI	-	-	-	-	-	s	-	-
L2.10	#39		TENDON	AUG	-	-	-	-	-	-	-	-
CC	CONTAINMENT			OWN	-	-	-	-	-	-	-	-
				PRE	-	-	-	-	-	-	-	-
L-B	I952040			ISI	-	-	-	-	-	-	-	-
L2.10	#40		TENDON	AUG	-	-	-	-	-	-	-	-
CC	CONTAINMENT			OWN	-	-	-	-	-	-	-	-
				PRE	-	-	-	-	-	-	-	-

Category, ItemNO, Class	Summary / CompID / System	Scope / Method / Procedure	Iso No. Comp. Desc. Code Case		Period 1			Period 2			Period 3	
					97	99	00	02	03	05	06	08
L-B	I952041			ISI	-	-	-	-	-	-	-	-
L2.10	#41		TENDON	AUG	-	-	-	-	-	-	-	-
CC	CONTAINMENT			OWN	-	-	-	-	-	-	-	-
				PRE	-	-	-	-	-	-	-	-
L-B	I952042			ISI	-	-	-	-	-	-	-	-
L2.10	#42		TENDON	AUG	-	-	-	-	-	-	-	-
CC	CONTAINMENT			OWN	-	-	-	-	-	-	-	-
				PRE	-	-	-	-	-	-	-	-
L-B	I952043			ISI	-	-	-	-	-	-	-	-
L2.10	#43		TENDON	AUG	-	-	-	-	-	-	-	-
CC	CONTAINMENT			OWN	-	-	-	-	-	-	-	-
				PRE	-	-	-	-	-	-	-	-
L-B	I952044			ISI	-	-	-	-	-	-	-	-
L2.10	#44		TENDON	AUG	-	-	-	-	-	-	-	-
CC	CONTAINMENT			OWN	-	-	-	-	-	-	-	-
				PRE	-	-	-	-	-	-	-	-
L-B	I952045			ISI	-	-	-	-	-	-	-	-
L2.10	#45		TENDON	AUG	-	-	-	-	-	-	-	-
CC	CONTAINMENT			OWN	-	-	-	-	-	-	-	-
				PRE	-	-	-	-	-	-	-	-
L-B	I952046			ISI	-	-	-	-	-	-	-	-
L2.10	#46		TENDON	AUG	-	-	-	-	-	-	-	-
CC	CONTAINMENT			OWN	-	-	-	-	-	-	-	-
				PRE	-	-	-	-	-	-	-	-
L-B	I952047			ISI	-	-	-	-	-	-	-	-
L2.10	#47		TENDON	AUG	-	-	-	-	-	-	-	-
CC	CONTAINMENT			OWN	-	-	-	-	-	-	-	-
				PRE	-	-	-	-	-	-	-	-
L-B	I952048			ISI	-	-	-	-	-	-	-	-
L2.10	#48		TENDON	AUG	-	-	-	-	-	-	-	-
CC	CONTAINMENT			OWN	-	-	-	-	-	-	-	-
				PRE	-	-	-	-	-	-	-	-
L-B	I952049			ISI	-	-	-	-	-	-	-	-
L2.10	#49		TENDON	AUG	-	-	-	-	-	-	-	-
CC	CONTAINMENT			OWN	-	-	-	-	-	-	-	-
				PRE	-	-	-	-	-	-	-	-
L-B	I952050			ISI	-	-	-	-	-	-	-	-
L2.10	#50		TENDON	AUG	-	-	-	-	-	-	-	-
CC	CONTAINMENT			OWN	-	-	-	-	-	-	-	-
				PRE	-	-	-	-	-	-	-	-

Category, ItemNO, Class	Summary / CompID / System	Scope / Method / Procedure	Iso No. Comp. Desc. Code Case		Period 1 97	Period 1 99	Period 1 00	Period 2 02	Period 2 03	Period 2 05	Period 3 06	Period 3 08
L-B	I952051			ISI	-	-	-	-	-	-	-	-
L2.10	#51		TENDON	AUG	-	-	-	-	-	-	-	-
CC	CONTAINMENT			OWN	-	-	-	-	-	-	-	-
				PRE	-	-	-	-	-	-	-	-
L-B	I952052			ISI	-	-	-	-	-	-	-	-
L2.10	#52		TENDON	AUG	-	-	-	-	-	-	-	-
CC	CONTAINMENT			OWN	-	-	-	-	-	-	-	-
				PRE	-	-	-	-	-	-	-	-
L-B	I952053			ISI	-	-	-	-	-	-	-	-
L2.10	#53		TENDON	AUG	-	-	-	-	-	-	-	-
CC	CONTAINMENT			OWN	-	-	-	-	-	-	-	-
				PRE	-	-	-	-	-	-	-	-
L-B	I952054			ISI	-	-	-	-	-	-	-	-
L2.10	#54		TENDON	AUG	-	-	-	-	-	-	-	-
CC	CONTAINMENT			OWN	-	-	-	-	-	-	-	-
				PRE	-	-	-	-	-	-	-	-
L-B	I952055			ISI	-	-	-	-	-	-	-	-
L2.10	#55		TENDON	AUG	-	-	-	-	-	-	-	-
CC	CONTAINMENT			OWN	-	-	-	-	-	-	-	-
				PRE	-	-	-	-	-	-	-	-
L-B	I952056	ISI/VT/FT		ISI	-	-	-	-	-	s	-	-
L2.10	#56		TENDON	AUG	-	-	-	-	-	-	-	-
CC	CONTAINMENT			OWN	-	-	-	-	-	-	-	-
				PRE	-	-	-	-	-	-	-	-
L-B	I952057	ISI/VT/FT		ISI	-	-	r	c	-	-	-	-
L2.10	#57		TENDON	AUG	-	-	-	-	-	-	-	-
CC	CONTAINMENT			OWN	-	-	-	-	-	-	-	-
				PRE	-	-	-	-	-	-	-	-
L-B	I952058	ISI/VT/FT		ISI	-	-	-	-	-	s	-	-
L2.10	#58		TENDON	AUG	-	-	-	-	-	-	-	-
CC	CONTAINMENT			OWN	-	-	-	-	-	-	-	-
				PRE	-	-	-	-	-	-	-	-
L-B	I952059			ISI	-	-	-	-	-	-	-	-
L2.10	#59		TENDON	AUG	-	-	-	-	-	-	-	-
CC	CONTAINMENT			OWN	-	-	-	-	-	-	-	-
				PRE	-	-	-	-	-	-	-	-
L-B	I952060			ISI	-	-	-	-	-	-	-	-
L2.10	#60		TENDON	AUG	-	-	-	-	-	-	-	-
CC	CONTAINMENT			OWN	-	-	-	-	-	-	-	-
				PRE	-	-	-	-	-	-	-	-

Category, ItemNO, Class	Summary / CompID / System	Scope / Method / Procedure	Iso No. Comp. Desc. Code Case		Period 1 97	Period 1 99	Period 1 00	Period 2 02	Period 2 03	Period 2 05	Period 3 06	Period 3 08
L-B	I952061			ISI	-	-	-	-	-	-	-	-
L2.10	#61		TENDON	AUG	-	-	-	-	-	-	-	-
CC	CONTAINMENT			OWN	-	-	-	-	-	-	-	-
				PRE	-	-	-	-	-	-	-	-
L-B	I952062			ISI	-	-	-	-	-	-	-	-
L2.10	#62		TENDON	AUG	-	-	-	-	-	-	-	-
CC	CONTAINMENT			OWN	-	-	-	-	-	-	-	-
				PRE	-	-	-	-	-	-	-	-
L-B	I952063			ISI	-	-	-	-	-	-	-	-
L2.10	#63		TENDON	AUG	-	-	-	-	-	-	-	-
CC	CONTAINMENT			OWN	-	-	-	-	-	-	-	-
				PRE	-	-	-	-	-	-	-	-
L-B	I952064			ISI	-	-	-	-	-	-	-	-
L2.10	#64		TENDON	AUG	-	-	-	-	-	-	-	-
CC	CONTAINMENT			OWN	-	-	-	-	-	-	-	-
				PRE	-	-	-	-	-	-	-	-
L-B	I952065			ISI	-	-	-	-	-	-	-	-
L2.10	#65		TENDON	AUG	-	-	-	-	-	-	-	-
CC	CONTAINMENT			OWN	-	-	-	-	-	-	-	-
				PRE	-	-	-	-	-	-	-	-
L-B	I952066	ISI/VT/FT		ISI	-	-	r	c	-	-	-	-
L2.10	#66		TENDON	AUG	-	-	-	-	-	-	-	-
CC	CONTAINMENT			OWN	-	-	-	-	-	-	-	-
				PRE	-	-	-	-	-	-	-	-
L-B	I952067			ISI	-	-	-	-	-	-	-	-
L2.10	#67		TENDON	AUG	-	-	-	-	-	-	-	-
CC	CONTAINMENT			OWN	-	-	-	-	-	-	-	-
				PRE	-	-	-	-	-	-	-	-
L-B	I952068			ISI	-	-	-	-	-	-	-	-
L2.10	#68		TENDON	AUG	-	-	-	-	-	-	-	-
CC	CONTAINMENT			OWN	-	-	-	-	-	-	-	-
				PRE	-	-	-	-	-	-	-	-
L-B	I952069			ISI	-	-	-	-	-	-	-	-
L2.10	#69		TENDON	AUG	-	-	-	-	-	-	-	-
CC	CONTAINMENT			OWN	-	-	-	-	-	-	-	-
				PRE	-	-	-	-	-	-	-	-
L-B	I952070			ISI	-	-	-	-	-	-	-	-
L2.10	#70		TENDON	AUG	-	-	-	-	-	-	-	-
CC	CONTAINMENT			OWN	-	-	-	-	-	-	-	-
				PRE	-	-	-	-	-	-	-	-

Category, ItemNO, Class	Summary / CompID / System	Scope / Method / Procedure	Iso No. Comp. Desc. Code Case		Period 1 97	Period 1 99	Period 1 00	Period 2 02	Period 2 03	Period 2 05	Period 3 06	Period 3 08
L-B	I952071	ISI/VT/FT		ISI	-	-	-	-	-	s	-	-
L2.10	#71		TENDON	AUG	-	-	-	-	-	-	-	-
CC	CONTAINMENT			OWN	-	-	-	-	-	-	-	-
				PRE	-	-	-	-	-	-	-	-
L-B	I952072	ISI/VT/FT		ISI	-	-	-	-	-	s	-	-
L2.10	#72		TENDON	AUG	-	-	-	-	-	-	-	-
CC	CONTAINMENT			OWN	-	-	-	-	-	-	-	-
				PRE	-	-	-	-	-	-	-	-
L-B	I952073	ISI/VT/FT		ISI	-	-	-	-	-	s	-	-
L2.10	#73		TENDON	AUG	-	-	-	-	-	-	-	-
CC	CONTAINMENT			OWN	-	-	-	-	-	-	-	-
				PRE	-	-	-	-	-	-	-	-
L-B	I952074			ISI	-	-	-	-	-	-	-	-
L2.10	#74		TENDON	AUG	-	-	-	-	-	-	-	-
CC	CONTAINMENT			OWN	-	-	-	-	-	-	-	-
				PRE	-	-	-	-	-	-	-	-
L-B	I952075			ISI	-	-	-	-	-	-	-	-
L2.10	#75		TENDON	AUG	-	-	-	-	-	-	-	-
CC	CONTAINMENT			OWN	-	-	-	-	-	-	-	-
				PRE	-	-	-	-	-	-	-	-
L-B	I952076			ISI	-	-	-	-	-	-	-	-
L2.10	#76		TENDON	AUG	-	-	-	-	-	-	-	-
CC	CONTAINMENT			OWN	-	-	-	-	-	-	-	-
				PRE	-	-	-	-	-	-	-	-
L-B	I952077	ISI/VT/FT		ISI	-	-	r	c	-	-	-	-
L2.10	#77		TENDON	AUG	-	-	-	-	-	-	-	-
CC	CONTAINMENT			OWN	-	-	-	-	-	-	-	-
				PRE	-	-	-	-	-	-	-	-
L-B	I952078			ISI	-	-	-	-	-	-	-	-
L2.10	#78		TENDON	AUG	-	-	-	-	-	-	-	-
CC	CONTAINMENT			OWN	-	-	-	-	-	-	-	-
				PRE	-	-	-	-	-	-	-	-
L-B	I952079			ISI	-	-	-	-	-	-	-	-
L2.10	#79		TENDON	AUG	-	-	-	-	-	-	-	-
CC	CONTAINMENT			OWN	-	-	-	-	-	-	-	-
				PRE	-	-	-	-	-	-	-	-
L-B	I952080			ISI	-	-	-	-	-	-	-	-
L2.10	#80		TENDON	AUG	-	-	-	-	-	-	-	-
CC	CONTAINMENT			OWN	-	-	-	-	-	-	-	-
				PRE	-	-	-	-	-	-	-	-

Category, ItemNO, Class	Summary / CompID / System	Scope / Method / Procedure	Iso No. Comp. Desc. Code Case		Period 1			Period 2			Period 3	
					97	99	00	02	03	05	06	08
L-B	I952081			ISI	-	-	-	-	-	-	-	-
L2.10	#81		TENDON	AUG	-	-	-	-	-	-	-	-
CC	CONTAINMENT			OWN	-	-	-	-	-	-	-	-
				PRE	-	-	-	-	-	-	-	-
L-B	I952082			ISI	-	-	-	-	-	-	-	-
L2.10	#82		TENDON	AUG	-	-	-	-	-	-	-	-
CC	CONTAINMENT			OWN	-	-	-	-	-	-	-	-
				PRE	-	-	-	-	-	-	-	-
L-B	I952083			ISI	-	-	-	-	-	-	-	-
L2.10	#83		TENDON	AUG	-	-	-	-	-	-	-	-
CC	CONTAINMENT			OWN	-	-	-	-	-	-	-	-
				PRE	-	-	-	-	-	-	-	-
L-B	I952084			ISI	-	-	-	-	-	-	-	-
L2.10	#84		TENDON	AUG	-	-	-	-	-	-	-	-
CC	CONTAINMENT			OWN	-	-	-	-	-	-	-	-
				PRE	-	-	-	-	-	-	-	-
L-B	I952085			ISI	-	-	-	-	-	-	-	-
L2.10	#85		TENDON	AUG	-	-	-	-	-	-	-	-
CC	CONTAINMENT			OWN	-	-	-	-	-	-	-	-
				PRE	-	-	-	-	-	-	-	-
L-B	I952086			ISI	-	-	-	-	-	-	-	-
L2.10	#86		TENDON	AUG	-	-	-	-	-	-	-	-
CC	CONTAINMENT			OWN	-	-	-	-	-	-	-	-
				PRE	-	-	-	-	-	-	-	-
L-B	I952087			ISI	-	-	-	-	-	-	-	-
L2.10	#87		TENDON	AUG	-	-	-	-	-	-	-	-
CC	CONTAINMENT			OWN	-	-	-	-	-	-	-	-
				PRE	-	-	-	-	-	-	-	-
L-B	I952088			ISI	-	-	-	-	-	-	-	-
L2.10	#88		TENDON	AUG	-	-	-	-	-	-	-	-
CC	CONTAINMENT			OWN	-	-	-	-	-	-	-	-
				PRE	-	-	-	-	-	-	-	-
L-B	I952089			ISI	-	-	-	-	-	-	-	-
L2.10	#89		TENDON	AUG	-	-	-	-	-	-	-	-
CC	CONTAINMENT			OWN	-	-	-	-	-	-	-	-
				PRE	-	-	-	-	-	-	-	-
L-B	I952090			ISI	-	-	-	-	-	-	-	-
L2.10	#90		TENDON	AUG	-	-	-	-	-	-	-	-
CC	CONTAINMENT			OWN	-	-	-	-	-	-	-	-
				PRE	-	-	-	-	-	-	-	-

Category, ItemNO, Class	Summary / CompID / System	Scope / Method / Procedure	Iso No. Comp. Desc. Code Case		Period 1 97	Period 1 99	Period 1 00	Period 2 02	Period 2 03	Period 2 05	Period 3 06	Period 3 08
L-B	I952091			ISI	-	-	-	-	-	-	-	-
L2.10	#91		TENDON	AUG	-	-	-	-	-	-	-	-
CC	CONTAINMENT			OWN	-	-	-	-	-	-	-	-
				PRE	-	-	-	-	-	-	-	-
L-B	I952092			ISI	-	-	-	-	-	-	-	-
L2.10	#92		TENDON	AUG	-	-	-	-	-	-	-	-
CC	CONTAINMENT			OWN	-	-	-	-	-	-	-	-
				PRE	-	-	-	-	-	-	-	-
L-B	I952093			ISI	-	-	-	-	-	-	-	-
L2.10	#93		TENDON	AUG	-	-	-	-	-	-	-	-
CC	CONTAINMENT			OWN	-	-	-	-	-	-	-	-
				PRE	-	-	-	-	-	-	-	-
L-B	I952094			ISI	-	-	-	-	-	-	-	-
L2.10	#94		TENDON	AUG	-	-	-	-	-	-	-	-
CC	CONTAINMENT			OWN	-	-	-	-	-	-	-	-
				PRE	-	-	-	-	-	-	-	-
L-B	I952095			ISI	-	-	-	-	-	-	-	-
L2.10	#95		TENDON	AUG	-	-	-	-	-	-	-	-
CC	CONTAINMENT			OWN	-	-	-	-	-	-	-	-
				PRE	-	-	-	-	-	-	-	-
L-B	I952096			ISI	-	-	-	-	-	-	-	-
L2.10	#96		TENDON	AUG	-	-	-	-	-	-	-	-
CC	CONTAINMENT			OWN	-	-	-	-	-	-	-	-
				PRE	-	-	-	-	-	-	-	-
L-B	I952097			ISI	-	-	-	-	-	-	-	-
L2.10	#97		TENDON	AUG	-	-	-	-	-	-	-	-
CC	CONTAINMENT			OWN	-	-	-	-	-	-	-	-
				PRE	-	-	-	-	-	-	-	-
L-B	I952098			ISI	-	-	-	-	-	-	-	-
L2.10	#98		TENDON	AUG	-	-	-	-	-	-	-	-
CC	CONTAINMENT			OWN	-	-	-	-	-	-	-	-
				PRE	-	-	-	-	-	-	-	-
L-B	I952099			ISI	-	-	-	-	-	-	-	-
L2.10	#99		TENDON	AUG	-	-	-	-	-	-	-	-
CC	CONTAINMENT			OWN	-	-	-	-	-	-	-	-
				PRE	-	-	-	-	-	-	-	-
L-B	I952100			ISI	-	-	-	-	-	-	-	-
L2.10	#100		TENDON	AUG	-	-	-	-	-	-	-	-
CC	CONTAINMENT			OWN	-	-	-	-	-	-	-	-
				PRE	-	-	-	-	-	-	-	-

Category, ItemNO, Class	Summary / CompID / System	Scope / Method / Procedure	Iso No. Comp. Desc. Code Case		Period 1 97	Period 1 99	Period 1 00	Period 2 02	Period 2 03	Period 2 05	Period 3 06	Period 3 08
L-B	I952101			ISI	-	-	-	-	-	-	-	-
L2.10	#101		TENDON	AUG	-	-	-	-	-	-	-	-
CC	CONTAINMENT			OWN	-	-	-	-	-	-	-	-
				PRE	-	-	-	-	-	-	-	-
L-B	I952102			ISI	-	-	-	-	-	-	-	-
L2.10	#102		TENDON	AUG	-	-	-	-	-	-	-	-
CC	CONTAINMENT			OWN	-	-	-	-	-	-	-	-
				PRE	-	-	-	-	-	-	-	-
L-B	I952103			ISI	-	-	-	-	-	-	-	-
L2.10	#103		TENDON	AUG	-	-	-	-	-	-	-	-
CC	CONTAINMENT			OWN	-	-	-	-	-	-	-	-
				PRE	-	-	-	-	-	-	-	-
L-B	I952104			ISI	-	-	-	-	-	-	-	-
L2.10	#104		TENDON	AUG	-	-	-	-	-	-	-	-
CC	CONTAINMENT			OWN	-	-	-	-	-	-	-	-
				PRE	-	-	-	-	-	-	-	-
L-B	I952105	ISI/VT/FT		ISI	-	-	r	c	-	-	-	-
L2.10	#105		TENDON	AUG	-	-	-	-	-	-	-	-
CC	CONTAINMENT			OWN	-	-	-	-	-	-	-	-
				PRE	-	-	-	-	-	-	-	-
L-B	I952106			ISI	-	-	-	-	-	-	-	-
L2.10	#106		TENDON	AUG	-	-	-	-	-	-	-	-
CC	CONTAINMENT			OWN	-	-	-	-	-	-	-	-
				PRE	-	-	-	-	-	-	-	-
L-B	I952107			ISI	-	-	-	-	-	-	-	-
L2.10	#107		TENDON	AUG	-	-	-	-	-	-	-	-
CC	CONTAINMENT			OWN	-	-	-	-	-	-	-	-
				PRE	-	-	-	-	-	-	-	-
L-B	I952108			ISI	-	-	-	-	-	-	-	-
L2.10	#108		TENDON	AUG	-	-	-	-	-	-	-	-
CC	CONTAINMENT			OWN	-	-	-	-	-	-	-	-
				PRE	-	-	-	-	-	-	-	-
L-B	I952109			ISI	-	-	-	-	-	-	-	-
L2.10	#109		TENDON	AUG	-	-	-	-	-	-	-	-
CC	CONTAINMENT			OWN	-	-	-	-	-	-	-	-
				PRE	-	-	-	-	-	-	-	-
L-B	I952110	ISI/VT/FT		ISI	-	-	r	c	-	-	-	-
L2.10	#110		TENDON	AUG	-	-	-	-	-	-	-	-
CC	CONTAINMENT			OWN	-	-	-	-	-	-	-	-
				PRE	-	-	-	-	-	-	-	-

Category, ItemNO, Class	Summary / CompID / System	Scope / Method / Procedure	Iso No. Comp. Desc. Code Case		Period 1 97	Period 1 99	Period 1 00	Period 2 02	Period 2 03	Period 2 05	Period 3 06	Period 3 08
L-B	I952111	ISI/VT/FT		ISI	-	-	-	-	-	s	-	-
L2.10	#111		TENDON	AUG	-	-	-	-	-	-	-	-
CC	CONTAINMENT			OWN	-	-	-	-	-	-	-	-
				PRE	-	-	-	-	-	-	-	-
L-B	I952112	ISI/VT/FT		ISI	-	-	r	c	-	b	-	-
L2.10	#112	ISI/VT/FT	TENDON	AUG	-	-	-	-	-	-	-	-
CC	CONTAINMENT			OWN	-	-	-	-	-	-	-	-
				PRE	-	-	-	-	-	-	-	-
L-B	I952113	ISI/VT/FT		ISI	-	-	-	-	-	s	-	-
L2.10	#113		TENDON	AUG	-	-	-	-	-	-	-	-
CC	CONTAINMENT			OWN	-	-	-	-	-	-	-	-
				PRE	-	-	-	-	-	-	-	-
L-B	I952114	ISI/VT/FT		ISI	-	-	-	-	-	s	-	-
L2.10	#114		TENDON	AUG	-	-	-	-	-	-	-	-
CC	CONTAINMENT			OWN	-	-	-	-	-	-	-	-
				PRE	-	-	-	-	-	-	-	-
L-B	I952115	ISI/VT/FT		ISI	-	-	-	-	-	s	-	-
L2.10	#115		TENDON	AUG	-	-	-	-	-	-	-	-
CC	CONTAINMENT			OWN	-	-	-	-	-	-	-	-
				PRE	-	-	-	-	-	-	-	-
L-B	I952116	ISI/VT/FT		ISI	-	-	-	-	-	s	-	-
L2.10	#116		TENDON	AUG	-	-	-	-	-	-	-	-
CC	CONTAINMENT			OWN	-	-	-	-	-	-	-	-
				PRE	-	-	-	-	-	-	-	-
L-B	I952117	ISI/VT/FT		ISI	-	-	-	-	-	s	-	-
L2.10	#117		TENDON	AUG	-	-	-	-	-	-	-	-
CC	CONTAINMENT			OWN	-	-	-	-	-	-	-	-
				PRE	-	-	-	-	-	-	-	-
L-B	I952118	ISI/VT/FT		ISI	-	-	-	-	-	s	-	-
L2.10	#118		TENDON	AUG	-	-	-	-	-	-	-	-
CC	CONTAINMENT			OWN	-	-	-	-	-	-	-	-
				PRE	-	-	-	-	-	-	-	-
L-B	I952119	ISI/VT/FT		ISI	-	-	-	-	-	s	-	-
L2.10	#119		TENDON	AUG	-	-	-	-	-	-	-	-
CC	CONTAINMENT			OWN	-	-	-	-	-	-	-	-
				PRE	-	-	-	-	-	-	-	-
L-B	I952120	ISI/VT/FT		ISI	-	-	-	-	-	s	-	-
L2.10	#120		TENDON	AUG	-	-	-	-	-	-	-	-
CC	CONTAINMENT			OWN	-	-	-	-	-	-	-	-
				PRE	-	-	-	-	-	-	-	-

Category, ItemNO, Class	Summary / CompID / System	Scope / Method / Procedure	Iso No. Comp. Desc. Code Case		Period 1 97	Period 1 99	Period 1 00	Period 2 02	Period 2 03	Period 2 05	Period 3 06	Period 3 08
L-B	I952121	ISI/VT/FT		ISI	-	-	-	-	-	s	-	-
L2.10	#121		TENDON	AUG	-	-	-	-	-	-	-	-
CC	CONTAINMENT			OWN	-	-	-	-	-	-	-	-
				PRE	-	-	-	-	-	-	-	-
L-B	I952122	ISI/VT/FT		ISI	-	-	r	c	-	b	-	-
L2.10	#122	ISI/VT/FT	TENDON	AUG	-	-	-	-	-	-	-	-
CC	CONTAINMENT			OWN	-	-	-	-	-	-	-	-
				PRE	-	-	-	-	-	-	-	-
L-B	I952123			ISI	-	-	-	-	-	-	-	-
L2.10	#123		TENDON	AUG	-	-	-	-	-	-	-	-
CC	CONTAINMENT			OWN	-	-	-	-	-	-	-	-
				PRE	-	-	-	-	-	-	-	-
L-B	I952124			ISI	-	-	-	-	-	-	-	-
L2.10	#124		TENDON	AUG	-	-	-	-	-	-	-	-
CC	CONTAINMENT			OWN	-	-	-	-	-	-	-	-
				PRE	-	-	-	-	-	-	-	-
L-B	I952125			ISI	-	-	-	-	-	-	-	-
L2.10	#125		TENDON	AUG	-	-	-	-	-	-	-	-
CC	CONTAINMENT			OWN	-	-	-	-	-	-	-	-
				PRE	-	-	-	-	-	-	-	-
L-B	I952126	ISI/VT/FT		ISI	-	-	-	-	-	s	-	-
L2.10	#126		TENDON	AUG	-	-	-	-	-	-	-	-
CC	CONTAINMENT			OWN	-	-	-	-	-	-	-	-
				PRE	-	-	-	-	-	-	-	-
L-B	I952127			ISI	-	-	-	-	-	-	-	-
L2.10	#127		TENDON	AUG	-	-	-	-	-	-	-	-
CC	CONTAINMENT			OWN	-	-	-	-	-	-	-	-
				PRE	-	-	-	-	-	-	-	-
L-B	I952128	ISI/VT/FT		ISI	-	-	r	c	-	-	-	-
L2.10	#128		TENDON	AUG	-	-	-	-	-	-	-	-
CC	CONTAINMENT			OWN	-	-	-	-	-	-	-	-
				PRE	-	-	-	-	-	-	-	-
L-B	I952129	ISI/VT/FT		ISI	-	-	r	c	-	-	-	-
L2.10	#129		TENDON	AUG	-	-	-	-	-	-	-	-
CC	CONTAINMENT			OWN	-	-	-	-	-	-	-	-
				PRE	-	-	-	-	-	-	-	-
L-B	I952130			ISI	-	-	-	-	-	-	-	-
L2.10	#130		TENDON	AUG	-	-	-	-	-	-	-	-
CC	CONTAINMENT			OWN	-	-	-	-	-	-	-	-
				PRE	-	-	-	-	-	-	-	-

Category, ItemNO, Class	Summary / CompID / System	Scope / Method / Procedure	Iso No. Comp. Desc. Code Case		Period 1 97	Period 1 99	Period 1 00	Period 2 02	Period 2 03	Period 2 05	Period 3 06	Period 3 08
L-B	I952131			ISI	-	-	-	-	-	-	-	-
L2.10	#131		TENDON	AUG	-	-	-	-	-	-	-	-
CC	CONTAINMENT			OWN	-	-	-	-	-	-	-	-
				PRE	-	-	-	-	-	-	-	-
L-B	I952132	ISI/VT/FT		ISI	-	-	-	-	-	s	-	-
L2.10	#132		TENDON	AUG	-	-	-	-	-	-	-	-
CC	CONTAINMENT			OWN	-	-	-	-	-	-	-	-
				PRE	-	-	-	-	-	-	-	-
L-B	I952133			ISI	-	-	-	-	-	-	-	-
L2.10	#133		TENDON	AUG	-	-	-	-	-	-	-	-
CC	CONTAINMENT			OWN	-	-	-	-	-	-	-	-
				PRE	-	-	-	-	-	-	-	-
L-B	I952134			ISI	-	-	-	-	-	-	-	-
L2.10	#134		TENDON	AUG	-	-	-	-	-	-	-	-
CC	CONTAINMENT			OWN	-	-	-	-	-	-	-	-
				PRE	-	-	-	-	-	-	-	-
L-B	I952135			ISI	-	-	-	-	-	-	-	-
L2.10	#135		TENDON	AUG	-	-	-	-	-	-	-	-
CC	CONTAINMENT			OWN	-	-	-	-	-	-	-	-
				PRE	-	-	-	-	-	-	-	-
L-B	I952136			ISI	-	-	-	-	-	-	-	-
L2.10	#136		TENDON	AUG	-	-	-	-	-	-	-	-
CC	CONTAINMENT			OWN	-	-	-	-	-	-	-	-
				PRE	-	-	-	-	-	-	-	-
L-B	I952137			ISI	-	-	-	-	-	-	-	-
L2.10	#137		TENDON	AUG	-	-	-	-	-	-	-	-
CC	CONTAINMENT			OWN	-	-	-	-	-	-	-	-
				PRE	-	-	-	-	-	-	-	-
L-B	I952138			ISI	-	-	-	-	-	-	-	-
L2.10	#138		TENDON	AUG	-	-	-	-	-	-	-	-
CC	CONTAINMENT			OWN	-	-	-	-	-	-	-	-
				PRE	-	-	-	-	-	-	-	-
L-B	I952139			ISI	-	-	-	-	-	-	-	-
L2.10	#139		TENDON	AUG	-	-	-	-	-	-	-	-
CC	CONTAINMENT			OWN	-	-	-	-	-	-	-	-
				PRE	-	-	-	-	-	-	-	-
L-B	I952140			ISI	-	-	-	-	-	-	-	-
L2.10	#140		TENDON	AUG	-	-	-	-	-	-	-	-
CC	CONTAINMENT			OWN	-	-	-	-	-	-	-	-
				PRE	-	-	-	-	-	-	-	-

Category, ItemNO, Class	Summary / CompID / System	Scope / Method / Procedure	Iso No. Comp. Desc. Code Case		Period 1			Period 2			Period 3	
					97	99	00	02	03	05	06	08
L-B	I952141			ISI	-	-	-	-	-	-	-	-
L2.10	#141		TENDON	AUG	-	-	-	-	-	-	-	-
CC	CONTAINMENT			OWN	-	-	-	-	-	-	-	-
				PRE	-	-	-	-	-	-	-	-
L-B	I952142			ISI	-	-	-	-	-	-	-	-
L2.10	#142		TENDON	AUG	-	-	-	-	-	-	-	-
CC	CONTAINMENT			OWN	-	-	-	-	-	-	-	-
				PRE	-	-	-	-	-	-	-	-
L-B	I952143			ISI	-	-	-	-	-	-	-	-
L2.10	#143		TENDON	AUG	-	-	-	-	-	-	-	-
CC	CONTAINMENT			OWN	-	-	-	-	-	-	-	-
				PRE	-	-	-	-	-	-	-	-
L-B	I952144			ISI	-	-	-	-	-	-	-	-
L2.10	#144		TENDON	AUG	-	-	-	-	-	-	-	-
CC	CONTAINMENT			OWN	-	-	-	-	-	-	-	-
				PRE	-	-	-	-	-	-	-	-
L-B	I952145	ISI/VT/FT		ISI	-	-	-	-	-	s	-	-
L2.10	#145		TENDON	AUG	-	-	-	-	-	-	-	-
CC	CONTAINMENT			OWN	-	-	-	-	-	-	-	-
				PRE	-	-	-	-	-	-	-	-
L-B	I952146			ISI	-	-	-	-	-	-	-	-
L2.10	#146		TENDON	AUG	-	-	-	-	-	-	-	-
CC	CONTAINMENT			OWN	-	-	-	-	-	-	-	-
				PRE	-	-	-	-	-	-	-	-
L-B	I952147			ISI	-	-	-	-	-	-	-	-
L2.10	#147		TENDON	AUG	-	-	-	-	-	-	-	-
CC	CONTAINMENT			OWN	-	-	-	-	-	-	-	-
				PRE	-	-	-	-	-	-	-	-
L-B	I952148			ISI	-	-	-	-	-	-	-	-
L2.10	#148		TENDON	AUG	-	-	-	-	-	-	-	-
CC	CONTAINMENT			OWN	-	-	-	-	-	-	-	-
				PRE	-	-	-	-	-	-	-	-
L-B	I952149			ISI	-	-	-	-	-	-	-	-
L2.10	#149		TENDON	AUG	-	-	-	-	-	-	-	-
CC	CONTAINMENT			OWN	-	-	-	-	-	-	-	-
				PRE	-	-	-	-	-	-	-	-
L-B	I952150			ISI	-	-	-	-	-	-	-	-
L2.10	#150		TENDON	AUG	-	-	-	-	-	-	-	-
CC	CONTAINMENT			OWN	-	-	-	-	-	-	-	-
				PRE	-	-	-	-	-	-	-	-

Category, ItemNO, Class	Summary / CompID / System	Scope / Method / Procedure	Iso No. Comp. Desc. Code Case		Period 1 97	Period 1 99	Period 1 00	Period 2 02	Period 2 03	Period 2 05	Period 3 06	Period 3 08
L-B	I952151			ISI	-	-	-	-	-	-	-	-
L2.10	#151		TENDON	AUG	-	-	-	-	-	-	-	-
CC	CONTAINMENT			OWN	-	-	-	-	-	-	-	-
				PRE	-	-	-	-	-	-	-	-
L-B	I952152	ISI/VT/FT		ISI	-	-	-	-	-	s	-	-
L2.10	#152		TENDON	AUG	-	-	-	-	-	-	-	-
CC	CONTAINMENT			OWN	-	-	-	-	-	-	-	-
				PRE	-	-	-	-	-	-	-	-
L-B	I952153			ISI	-	-	-	-	-	-	-	-
L2.10	#153		TENDON	AUG	-	-	-	-	-	-	-	-
CC	CONTAINMENT			OWN	-	-	-	-	-	-	-	-
				PRE	-	-	-	-	-	-	-	-
L-B	I952154			ISI	-	-	-	-	-	-	-	-
L2.10	#154		TENDON	AUG	-	-	-	-	-	-	-	-
CC	CONTAINMENT			OWN	-	-	-	-	-	-	-	-
				PRE	-	-	-	-	-	-	-	-
L-B	I952155			ISI	-	-	-	-	-	-	-	-
L2.10	#155		TENDON	AUG	-	-	-	-	-	-	-	-
CC	CONTAINMENT			OWN	-	-	-	-	-	-	-	-
				PRE	-	-	-	-	-	-	-	-
L-B	I952156			ISI	-	-	-	-	-	-	-	-
L2.10	#156		TENDON	AUG	-	-	-	-	-	-	-	-
CC	CONTAINMENT			OWN	-	-	-	-	-	-	-	-
				PRE	-	-	-	-	-	-	-	-
L-B	I952157			ISI	-	-	-	-	-	-	-	-
L2.10	#157		TENDON	AUG	-	-	-	-	-	-	-	-
CC	CONTAINMENT			OWN	-	-	-	-	-	-	-	-
				PRE	-	-	-	-	-	-	-	-
L-B	I952158			ISI	-	-	-	-	-	-	-	-
L2.10	#158		TENDON	AUG	-	-	-	-	-	-	-	-
CC	CONTAINMENT			OWN	-	-	-	-	-	-	-	-
				PRE	-	-	-	-	-	-	-	-
L-B	I952159	ISI/VT/FT		ISI	-	-	-	-	-	s	-	-
L2.10	#159		TENDON	AUG	-	-	-	-	-	-	-	-
CC	CONTAINMENT			OWN	-	-	-	-	-	-	-	-
				PRE	-	-	-	-	-	-	-	-
L-B	I952160	ISI/VT/FT		ISI	-	-	r	c	-	-	-	-
L2.10	#160		TENDON	AUG	-	-	-	-	-	-	-	-
CC	CONTAINMENT			OWN	-	-	-	-	-	-	-	-
				PRE	-	-	-	-	-	-	-	-

Category, ItemNO, Class	Summary / CompID / System	Scope / Method / Procedure	Iso No. Comp. Desc. Code Case		Period 1 97	Period 1 99	Period 1 00	Period 2 02	Period 2 03	Period 2 05	Period 3 06	Period 3 08
L-B	I953001			ISI	-	-	-	-	-	-	-	-
L2.20	#1		TENDON WIRE/STRAND	AUG	-	-	-	-	-	-	-	-
CC	CONTAINMENT			OWN	-	-	-	-	-	-	-	-
				PRE	-	-	-	-	-	-	-	-
L-B	I953002	ISI/VT/FT		ISI	-	-	-	-	-	-	-	-
L2.20	#2	ISI/VT/VT-113	TENDON WIRE/STRAND	AUG	-	-	-	-	-	-	-	-
CC	CONTAINMENT			OWN	-	-	-	-	-	-	-	-
				PRE	-	-	-	-	-	-	-	-
L-B	I953003			ISI	-	-	-	-	-	-	-	-
L2.20	#3		TENDON WIRE/STRAND	AUG	-	-	-	-	-	-	-	-
CC	CONTAINMENT			OWN	-	-	-	-	-	-	-	-
				PRE	-	-	-	-	-	-	-	-
L-B	I953004	ISI/VT/FT		ISI	-	-	-	-	-	-	-	-
L2.20	#4	ISI/VT/VT-113	TENDON WIRE/STRAND	AUG	-	-	-	-	-	-	-	-
CC	CONTAINMENT			OWN	-	-	-	-	-	-	-	-
				PRE	-	-	-	-	-	-	-	-
L-B	I953005	ISI/VT/FT		ISI	-	-	-	-	-	s	-	-
L2.20	#5	ISI/VT/VT-113	TENDON WIRE/STRAND	AUG	-	-	-	-	-	-	-	-
CC	CONTAINMENT			OWN	-	-	-	-	-	-	-	-
				PRE	-	-	-	-	-	-	-	-
L-B	I953006			ISI	-	-	-	-	-	-	-	-
L2.20	#6		TENDON WIRE/STRAND	AUG	-	-	-	-	-	-	-	-
CC	CONTAINMENT			OWN	-	-	-	-	-	-	-	-
				PRE	-	-	-	-	-	-	-	-
L-B	I953007			ISI	-	-	-	-	-	-	-	-
L2.20	#7		TENDON WIRE/STRAND	AUG	-	-	-	-	-	-	-	-
CC	CONTAINMENT			OWN	-	-	-	-	-	-	-	-
				PRE	-	-	-	-	-	-	-	-
L-B	I953008			ISI	-	-	-	-	-	-	-	-
L2.20	#8		TENDON WIRE/STRAND	AUG	-	-	-	-	-	-	-	-
CC	CONTAINMENT			OWN	-	-	-	-	-	-	-	-
				PRE	-	-	-	-	-	-	-	-
L-B	I953009	ISI/VT/FT		ISI	-	-	r	c	-	-	-	-
L2.20	#9	ISI/VT/VT-113	TENDON WIRE/STRAND	AUG	-	-	-	-	-	-	-	-
CC	CONTAINMENT			OWN	-	-	-	-	-	-	-	-
				PRE	-	-	-	-	-	-	-	-
L-B	I953010	ISI/VT/FT		ISI	-	-	-	-	-	-	-	-
L2.20	#10	ISI/VT/VT-113	TENDON WIRE/STRAND	AUG	-	-	-	-	-	-	-	-
CC	CONTAINMENT			OWN	-	-	-	-	-	-	-	-
				PRE	-	-	-	-	-	-	-	-

Category, ItemNO, Class	Summary / CompID / System	Scope / Method / Procedure	Iso No. Comp. Desc. Code Case		Period 1 97	Period 1 99	Period 1 00	Period 2 02	Period 2 03	Period 2 05	Period 3 06	Period 3 08
L-B	I953011			ISI	-	-	-	-	-	-	-	-
L2.20	#11		TENDON WIRE/STRAND	AUG	-	-	-	-	-	-	-	-
CC	CONTAINMENT			OWN	-	-	-	-	-	-	-	-
				PRE	-	-	-	-	-	-	-	-
L-B	I953012			ISI	-	-	-	-	-	-	-	-
L2.20	#12		TENDON WIRE/STRAND	AUG	-	-	-	-	-	-	-	-
CC	CONTAINMENT			OWN	-	-	-	-	-	-	-	-
				PRE	-	-	-	-	-	-	-	-
L-B	I953013			ISI	-	-	-	-	-	-	-	-
L2.20	#13		TENDON WIRE/STRAND	AUG	-	-	-	-	-	-	-	-
CC	CONTAINMENT			OWN	-	-	-	-	-	-	-	-
				PRE	-	-	-	-	-	-	-	-
L-B	I953014	ISI/VT/FT		ISI	-	-	-	-	-	s	-	-
L2.20	#14	ISI/VT/VT-113	TENDON WIRE/STRAND	AUG	-	-	-	-	-	-	-	-
CC	CONTAINMENT			OWN	-	-	-	-	-	-	-	-
				PRE	-	-	-	-	-	-	-	-
L-B	I953015			ISI	-	-	-	-	-	-	-	-
L2.20	#15		TENDON WIRE/STRAND	AUG	-	-	-	-	-	-	-	-
CC	CONTAINMENT			OWN	-	-	-	-	-	-	-	-
				PRE	-	-	-	-	-	-	-	-
L-B	I953016	ISI/VT/FT		ISI	-	-	-	-	-	s	-	-
L2.20	#16	ISI/VT/VT-113	TENDON WIRE/STRAND	AUG	-	-	-	-	-	-	-	-
CC	CONTAINMENT			OWN	-	-	-	-	-	-	-	-
				PRE	-	-	-	-	-	-	-	-
L-B	I953017			ISI	-	-	-	-	-	-	-	-
L2.20	#17		TENDON WIRE/STRAND	AUG	-	-	-	-	-	-	-	-
CC	CONTAINMENT			OWN	-	-	-	-	-	-	-	-
				PRE	-	-	-	-	-	-	-	-
L-B	I953018			ISI	-	-	-	-	-	-	-	-
L2.20	#18		TENDON WIRE/STRAND	AUG	-	-	-	-	-	-	-	-
CC	CONTAINMENT			OWN	-	-	-	-	-	-	-	-
				PRE	-	-	-	-	-	-	-	-
L-B	I953019			ISI	-	-	-	-	-	-	-	-
L2.20	#19		TENDON WIRE/STRAND	AUG	-	-	-	-	-	-	-	-
CC	CONTAINMENT			OWN	-	-	-	-	-	-	-	-
				PRE	-	-	-	-	-	-	-	-
L-B	I953020			ISI	-	-	-	-	-	-	-	-
L2.20	#20		TENDON WIRE/STRAND	AUG	-	-	-	-	-	-	-	-
CC	CONTAINMENT			OWN	-	-	-	-	-	-	-	-
				PRE	-	-	-	-	-	-	-	-

Category, ItemNO, Class	Summary / CompID / System	Scope / Method / Procedure	Iso No. Comp. Desc. Code Case		Period 1 97	Period 1 99	Period 1 00	Period 2 02	Period 2 03	Period 2 05	Period 3 06	Period 3 08
L-B	I953021			ISI	-	-	-	-	-	-	-	-
L2.20	#21		TENDON WIRE/STRAND	AUG	-	-	-	-	-	-	-	-
CC	CONTAINMENT			OWN	-	-	-	-	-	-	-	-
				PRE	-	-	-	-	-	-	-	-
L-B	I953022			ISI	-	-	-	-	-	-	-	-
L2.20	#22		TENDON WIRE/STRAND	AUG	-	-	-	-	-	-	-	-
CC	CONTAINMENT			OWN	-	-	-	-	-	-	-	-
				PRE	-	-	-	-	-	-	-	-
L-B	I953023			ISI	-	-	-	-	-	-	-	-
L2.20	#23		TENDON WIRE/STRAND	AUG	-	-	-	-	-	-	-	-
CC	CONTAINMENT			OWN	-	-	-	-	-	-	-	-
				PRE	-	-	-	-	-	-	-	-
L-B	I953024			ISI	-	-	-	-	-	-	-	-
L2.20	#24		TENDON WIRE/STRAND	AUG	-	-	-	-	-	-	-	-
CC	CONTAINMENT			OWN	-	-	-	-	-	-	-	-
				PRE	-	-	-	-	-	-	-	-
L-B	I953025			ISI	-	-	-	-	-	-	-	-
L2.20	#25		TENDON WIRE/STRAND	AUG	-	-	-	-	-	-	-	-
CC	CONTAINMENT			OWN	-	-	-	-	-	-	-	-
				PRE	-	-	-	-	-	-	-	-
L-B	I953026			ISI	-	-	-	-	-	-	-	-
L2.20	#26		TENDON WIRE/STRAND	AUG	-	-	-	-	-	-	-	-
CC	CONTAINMENT			OWN	-	-	-	-	-	-	-	-
				PRE	-	-	-	-	-	-	-	-
L-B	I953027			ISI	-	-	-	-	-	-	-	-
L2.20	#27		TENDON WIRE/STRAND	AUG	-	-	-	-	-	-	-	-
CC	CONTAINMENT			OWN	-	-	-	-	-	-	-	-
				PRE	-	-	-	-	-	-	-	-
L-B	I953028			ISI	-	-	-	-	-	-	-	-
L2.20	#28		TENDON WIRE/STRAND	AUG	-	-	-	-	-	-	-	-
CC	CONTAINMENT			OWN	-	-	-	-	-	-	-	-
				PRE	-	-	-	-	-	-	-	-
L-B	I953029			ISI	-	-	-	-	-	-	-	-
L2.20	#29		TENDON WIRE/STRAND	AUG	-	-	-	-	-	-	-	-
CC	CONTAINMENT			OWN	-	-	-	-	-	-	-	-
				PRE	-	-	-	-	-	-	-	-
L-B	I953030	ISI/VT/FT		ISI	-	-	-	-	-	s	-	-
L2.20	#30	ISI/VT/VT-113	TENDON WIRE/STRAND	AUG	-	-	-	-	-	-	-	-
CC	CONTAINMENT			OWN	-	-	-	-	-	-	-	-
				PRE	-	-	-	-	-	-	-	-

Category, ItemNO, Class	Summary / CompID / System	Scope / Method / Procedure	Iso No. Comp. Desc. Code Case		Period 1 97	Period 1 99	Period 1 00	Period 2 02	Period 2 03	Period 2 05	Period 3 06	Period 3 08
L-B	I953031			ISI	-	-	-	-	-	-	-	-
L2.20	#31		TENDON WIRE/STRAND	AUG	-	-	-	-	-	-	-	-
CC	CONTAINMENT			OWN	-	-	-	-	-	-	-	-
				PRE	-	-	-	-	-	-	-	-
L-B	I953032	ISI/VT/VT-113		ISI	-	-	-	-	-	s	-	-
L2.20	#32	ISI/VT/FT	TENDON WIRE/STRAND	AUG	-	-	-	-	-	-	-	-
CC	CONTAINMENT			OWN	-	-	-	-	-	-	-	-
				PRE	-	-	-	-	-	-	-	-
L-B	I953033	ISI/VT/VT-113		ISI	-	-	-	-	-	s	-	-
L2.20	#33	ISI/VT/FT	TENDON WIRE/STRAND	AUG	-	-	-	-	-	-	-	-
CC	CONTAINMENT			OWN	-	-	-	-	-	-	-	-
				PRE	-	-	-	-	-	-	-	-
L-B	I953034	ISI/VT/VT-113		ISI	-	-	-	-	-	s	-	-
L2.20	#34	ISI/VT/FT	TENDON WIRE/STRAND	AUG	-	-	-	-	-	-	-	-
CC	CONTAINMENT			OWN	-	-	-	-	-	-	-	-
				PRE	-	-	-	-	-	-	-	-
L-B	I953035	ISI/VT/FT		ISI	-	-	-	-	-	s	-	-
L2.20	#35	ISI/VT/VT-113	TENDON WIRE/STRAND	AUG	-	-	-	-	-	-	-	-
CC	CONTAINMENT			OWN	-	-	-	-	-	-	-	-
				PRE	-	-	-	-	-	-	-	-
L-B	I953036	ISI/VT/VT-113		ISI	-	-	-	-	-	s	-	-
L2.20	#36	ISI/VT/FT	TENDON WIRE/STRAND	AUG	-	-	-	-	-	-	-	-
CC	CONTAINMENT			OWN	-	-	-	-	-	-	-	-
				PRE	-	-	-	-	-	-	-	-
L-B	I953037	ISI/VT/VT-113		ISI	-	-	-	-	-	s	-	-
L2.20	#37	ISI/VT/FT	TENDON WIRE/STRAND	AUG	-	-	-	-	-	-	-	-
CC	CONTAINMENT			OWN	-	-	-	-	-	-	-	-
				PRE	-	-	-	-	-	-	-	-
L-B	I953038	ISI/VT/FT		ISI	-	-	-	-	-	s	-	-
L2.20	#38	ISI/VT/VT-113	TENDON WIRE/STRAND	AUG	-	-	-	-	-	-	-	-
CC	CONTAINMENT			OWN	-	-	-	-	-	-	-	-
				PRE	-	-	-	-	-	-	-	-
L-B	I953039	OWN/VT/FT		ISI	-	-	-	-	-	s	-	-
L2.20	#39	OWN/VT/VT-113	TENDON WIRE/STRAND	AUG	-	-	-	-	-	-	-	-
CC	CONTAINMENT	ISI/VT/VT-113		OWN	-	-	-	c	-	-	-	-
		ISI/VT/FT		PRE	-	-	-	-	-	-	-	-
L-B	I953040			ISI	-	-	-	-	-	-	-	-
L2.20	#40		TENDON WIRE/STRAND	AUG	-	-	-	-	-	-	-	-
CC	CONTAINMENT			OWN	-	-	-	-	-	-	-	-
				PRE	-	-	-	-	-	-	-	-

Category, ItemNO, Class	Summary / CompID / System	Scope / Method / Procedure	Iso No. Comp. Desc. Code Case		Period 1 97	Period 1 99	Period 1 00	Period 2 02	Period 2 03	Period 2 05	Period 3 06	Period 3 08
L-B	I953041			ISI	-	-	-	-	-	-	-	-
L2.20	#41		TENDON WIRE/STRAND	AUG	-	-	-	-	-	-	-	-
CC	CONTAINMENT			OWN	-	-	-	-	-	-	-	-
				PRE	-	-	-	-	-	-	-	-
L-B	I953042			ISI	-	-	-	-	-	-	-	-
L2.20	#42		TENDON WIRE/STRAND	AUG	-	-	-	-	-	-	-	-
CC	CONTAINMENT			OWN	-	-	-	-	-	-	-	-
				PRE	-	-	-	-	-	-	-	-
L-B	I953043			ISI	-	-	-	-	-	-	-	-
L2.20	#43		TENDON WIRE/STRAND	AUG	-	-	-	-	-	-	-	-
CC	CONTAINMENT			OWN	-	-	-	-	-	-	-	-
				PRE	-	-	-	-	-	-	-	-
L-B	I953044			ISI	-	-	-	-	-	-	-	-
L2.20	#44		TENDON WIRE/STRAND	AUG	-	-	-	-	-	-	-	-
CC	CONTAINMENT			OWN	-	-	-	-	-	-	-	-
				PRE	-	-	-	-	-	-	-	-
L-B	I953045			ISI	-	-	-	-	-	-	-	-
L2.20	#45		TENDON WIRE/STRAND	AUG	-	-	-	-	-	-	-	-
CC	CONTAINMENT			OWN	-	-	-	-	-	-	-	-
				PRE	-	-	-	-	-	-	-	-
L-B	I953046			ISI	-	-	-	-	-	-	-	-
L2.20	#46		TENDON WIRE/STRAND	AUG	-	-	-	-	-	-	-	-
CC	CONTAINMENT			OWN	-	-	-	-	-	-	-	-
				PRE	-	-	-	-	-	-	-	-
L-B	I953047			ISI	-	-	-	-	-	-	-	-
L2.20	#47		TENDON WIRE/STRAND	AUG	-	-	-	-	-	-	-	-
CC	CONTAINMENT			OWN	-	-	-	-	-	-	-	-
				PRE	-	-	-	-	-	-	-	-
L-B	I953048			ISI	-	-	-	-	-	-	-	-
L2.20	#48		TENDON WIRE/STRAND	AUG	-	-	-	-	-	-	-	-
CC	CONTAINMENT			OWN	-	-	-	-	-	-	-	-
				PRE	-	-	-	-	-	-	-	-
L-B	I953049			ISI	-	-	-	-	-	-	-	-
L2.20	#49		TENDON WIRE/STRAND	AUG	-	-	-	-	-	-	-	-
CC	CONTAINMENT			OWN	-	-	-	-	-	-	-	-
				PRE	-	-	-	-	-	-	-	-
L-B	I953050			ISI	-	-	-	-	-	-	-	-
L2.20	#50		TENDON WIRE/STRAND	AUG	-	-	-	-	-	-	-	-
CC	CONTAINMENT			OWN	-	-	-	-	-	-	-	-
				PRE	-	-	-	-	-	-	-	-

Category, ItemNO, Class	Summary / CompID / System	Scope / Method / Procedure	Iso No. Comp. Desc. Code Case		Period 1 97	Period 1 99	Period 1 00	Period 2 02	Period 2 03	Period 2 05	Period 3 06	Period 3 08
L-B	I953051			ISI	-	-	-	-	-	-	-	-
L2.20	#51		TENDON WIRE/STRAND	AUG	-	-	-	-	-	-	-	-
CC	CONTAINMENT			OWN	-	-	-	-	-	-	-	-
				PRE	-	-	-	-	-	-	-	-
L-B	I953052			ISI	-	-	-	-	-	-	-	-
L2.20	#52		TENDON WIRE/STRAND	AUG	-	-	-	-	-	-	-	-
CC	CONTAINMENT			OWN	-	-	-	-	-	-	-	-
				PRE	-	-	-	-	-	-	-	-
L-B	I953053			ISI	-	-	-	-	-	-	-	-
L2.20	#53		TENDON WIRE/STRAND	AUG	-	-	-	-	-	-	-	-
CC	CONTAINMENT			OWN	-	-	-	-	-	-	-	-
				PRE	-	-	-	-	-	-	-	-
L-B	I953054			ISI	-	-	-	-	-	-	-	-
L2.20	#54		TENDON WIRE/STRAND	AUG	-	-	-	-	-	-	-	-
CC	CONTAINMENT			OWN	-	-	-	-	-	-	-	-
				PRE	-	-	-	-	-	-	-	-
L-B	I953055			ISI	-	-	-	-	-	-	-	-
L2.20	#55		TENDON WIRE/STRAND	AUG	-	-	-	-	-	-	-	-
CC	CONTAINMENT			OWN	-	-	-	-	-	-	-	-
				PRE	-	-	-	-	-	-	-	-
L-B	I953056	ISI/VT/VT-113		ISI	-	-	-	-	-	s	-	-
L2.20	#56	ISI/VT/FT	TENDON WIRE/STRAND	AUG	-	-	-	-	-	-	-	-
CC	CONTAINMENT			OWN	-	-	-	-	-	-	-	-
				PRE	-	-	-	-	-	-	-	-
L-B	I953057	ISI/VT/FT		ISI	-	-	-	-	-	-	-	-
L2.20	#57	ISI/VT/VT-113	TENDON WIRE/STRAND	AUG	-	-	-	-	-	-	-	-
CC	CONTAINMENT			OWN	-	-	-	-	-	-	-	-
				PRE	-	-	-	-	-	-	-	-
L-B	I953058	ISI/VT/FT		ISI	-	-	-	-	-	s	-	-
L2.20	#58	ISI/VT/VT-113	TENDON WIRE/STRAND	AUG	-	-	-	-	-	-	-	-
CC	CONTAINMENT			OWN	-	-	-	-	-	-	-	-
				PRE	-	-	-	-	-	-	-	-
L-B	I953059			ISI	-	-	-	-	-	-	-	-
L2.20	#59		TENDON WIRE/STRAND	AUG	-	-	-	-	-	-	-	-
CC	CONTAINMENT			OWN	-	-	-	-	-	-	-	-
				PRE	-	-	-	-	-	-	-	-
L-B	I953060			ISI	-	-	-	-	-	-	-	-
L2.20	#60		TENDON WIRE/STRAND	AUG	-	-	-	-	-	-	-	-
CC	CONTAINMENT			OWN	-	-	-	-	-	-	-	-
				PRE	-	-	-	-	-	-	-	-

Category, ItemNO, Class	Summary / CompID / System	Scope / Method / Procedure	Iso No. Comp. Desc. Code Case		Period 1 97	Period 1 99	Period 1 00	Period 2 02	Period 2 03	Period 2 05	Period 3 06	Period 3 08
L-B	I953061			ISI	-	-	-	-	-	-	-	-
L2.20	#61		TENDON WIRE/STRAND	AUG	-	-	-	-	-	-	-	-
CC	CONTAINMENT			OWN	-	-	-	-	-	-	-	-
				PRE	-	-	-	-	-	-	-	-
L-B	I953062			ISI	-	-	-	-	-	-	-	-
L2.20	#62		TENDON WIRE/STRAND	AUG	-	-	-	-	-	-	-	-
CC	CONTAINMENT			OWN	-	-	-	-	-	-	-	-
				PRE	-	-	-	-	-	-	-	-
L-B	I953063			ISI	-	-	-	-	-	-	-	-
L2.20	#63		TENDON WIRE/STRAND	AUG	-	-	-	-	-	-	-	-
CC	CONTAINMENT			OWN	-	-	-	-	-	-	-	-
				PRE	-	-	-	-	-	-	-	-
L-B	I953064			ISI	-	-	-	-	-	-	-	-
L2.20	#64		TENDON WIRE/STRAND	AUG	-	-	-	-	-	-	-	-
CC	CONTAINMENT			OWN	-	-	-	-	-	-	-	-
				PRE	-	-	-	-	-	-	-	-
L-B	I953065			ISI	-	-	-	-	-	-	-	-
L2.20	#65		TENDON WIRE/STRAND	AUG	-	-	-	-	-	-	-	-
CC	CONTAINMENT			OWN	-	-	-	-	-	-	-	-
				PRE	-	-	-	-	-	-	-	-
L-B	I953066	ISI/VT/FT		ISI	-	-	-	-	-	-	-	-
L2.20	#66	ISI/VT/VT-113	TENDON WIRE/STRAND	AUG	-	-	-	-	-	-	-	-
CC	CONTAINMENT			OWN	-	-	-	-	-	-	-	-
				PRE	-	-	-	-	-	-	-	-
L-B	I953067			ISI	-	-	-	-	-	-	-	-
L2.20	#67		TENDON WIRE/STRAND	AUG	-	-	-	-	-	-	-	-
CC	CONTAINMENT			OWN	-	-	-	-	-	-	-	-
				PRE	-	-	-	-	-	-	-	-
L-B	I953068			ISI	-	-	-	-	-	-	-	-
L2.20	#68		TENDON WIRE/STRAND	AUG	-	-	-	-	-	-	-	-
CC	CONTAINMENT			OWN	-	-	-	-	-	-	-	-
				PRE	-	-	-	-	-	-	-	-
L-B	I953069			ISI	-	-	-	-	-	-	-	-
L2.20	#69		TENDON WIRE/STRAND	AUG	-	-	-	-	-	-	-	-
CC	CONTAINMENT			OWN	-	-	-	-	-	-	-	-
				PRE	-	-	-	-	-	-	-	-
L-B	I953070			ISI	-	-	-	-	-	-	-	-
L2.20	#70		TENDON WIRE/STRAND	AUG	-	-	-	-	-	-	-	-
CC	CONTAINMENT			OWN	-	-	-	-	-	-	-	-
				PRE	-	-	-	-	-	-	-	-

Category, ItemNO, Class	Summary / CompID / System	Scope / Method / Procedure	Iso No. Comp. Desc. Code Case		Period 1 97	Period 1 99	Period 1 00	Period 2 02	Period 2 03	Period 2 05	Period 3 06	Period 3 08
L-B	I953071	ISI/VT/FT		ISI	-	-	-	-	-	s	-	-
L2.20	#71	ISI/VT/VT-113	TENDON WIRE/STRAND	AUG	-	-	-	-	-	-	-	-
CC	CONTAINMENT			OWN	-	-	-	-	-	-	-	-
				PRE	-	-	-	-	-	-	-	-
L-B	I953072	ISI/VT/FT		ISI	-	-	-	-	-	s	-	-
L2.20	#72	ISI/VT/VT-113	TENDON WIRE/STRAND	AUG	-	-	-	-	-	-	-	-
CC	CONTAINMENT			OWN	-	-	-	-	-	-	-	-
				PRE	-	-	-	-	-	-	-	-
L-B	I953073	ISI/VT/VT-113		ISI	-	-	-	-	-	s	-	-
L2.20	#73	ISI/VT/FT	TENDON WIRE/STRAND	AUG	-	-	-	-	-	-	-	-
CC	CONTAINMENT			OWN	-	-	-	-	-	-	-	-
				PRE	-	-	-	-	-	-	-	-
L-B	I953074			ISI	-	-	-	-	-	-	-	-
L2.20	#74		TENDON WIRE/STRAND	AUG	-	-	-	-	-	-	-	-
CC	CONTAINMENT			OWN	-	-	-	-	-	-	-	-
				PRE	-	-	-	-	-	-	-	-
L-B	I953075			ISI	-	-	-	-	-	-	-	-
L2.20	#75		TENDON WIRE/STRAND	AUG	-	-	-	-	-	-	-	-
CC	CONTAINMENT			OWN	-	-	-	-	-	-	-	-
				PRE	-	-	-	-	-	-	-	-
L-B	I953076			ISI	-	-	-	-	-	-	-	-
L2.20	#76		TENDON WIRE/STRAND	AUG	-	-	-	-	-	-	-	-
CC	CONTAINMENT			OWN	-	-	-	-	-	-	-	-
				PRE	-	-	-	-	-	-	-	-
L-B	I953077	ISI/VT/FT		ISI	-	-	-	-	-	-	-	-
L2.20	#77	ISI/VT/VT-113	TENDON WIRE/STRAND	AUG	-	-	-	-	-	-	-	-
CC	CONTAINMENT			OWN	-	-	-	-	-	-	-	-
				PRE	-	-	-	-	-	-	-	-
L-B	I953078			ISI	-	-	-	-	-	-	-	-
L2.20	#78		TENDON WIRE/STRAND	AUG	-	-	-	-	-	-	-	-
CC	CONTAINMENT			OWN	-	-	-	-	-	-	-	-
				PRE	-	-	-	-	-	-	-	-
L-B	I953079			ISI	-	-	-	-	-	-	-	-
L2.20	#79		TENDON WIRE/STRAND	AUG	-	-	-	-	-	-	-	-
CC	CONTAINMENT			OWN	-	-	-	-	-	-	-	-
				PRE	-	-	-	-	-	-	-	-
L-B	I953080			ISI	-	-	-	-	-	-	-	-
L2.20	#80		TENDON WIRE/STRAND	AUG	-	-	-	-	-	-	-	-
CC	CONTAINMENT			OWN	-	-	-	-	-	-	-	-
				PRE	-	-	-	-	-	-	-	-

Category, ItemNO, Class	Summary / CompID / System	Scope / Method / Procedure	Iso No. Comp. Desc. Code Case		Period 1 97	Period 1 99	Period 1 00	Period 2 02	Period 2 03	Period 2 05	Period 3 06	Period 3 08
L-B	I953081			ISI	-	-	-	-	-	-	-	-
L2.20	#81		TENDON WIRE/STRAND	AUG	-	-	-	-	-	-	-	-
CC	CONTAINMENT			OWN	-	-	-	-	-	-	-	-
				PRE	-	-	-	-	-	-	-	-
L-B	I953082			ISI	-	-	-	-	-	-	-	-
L2.20	#82		TENDON WIRE/STRAND	AUG	-	-	-	-	-	-	-	-
CC	CONTAINMENT			OWN	-	-	-	-	-	-	-	-
				PRE	-	-	-	-	-	-	-	-
L-B	I953083			ISI	-	-	-	-	-	-	-	-
L2.20	#83		TENDON WIRE/STRAND	AUG	-	-	-	-	-	-	-	-
CC	CONTAINMENT			OWN	-	-	-	-	-	-	-	-
				PRE	-	-	-	-	-	-	-	-
L-B	I953084			ISI	-	-	-	-	-	-	-	-
L2.20	#84		TENDON WIRE/STRAND	AUG	-	-	-	-	-	-	-	-
CC	CONTAINMENT			OWN	-	-	-	-	-	-	-	-
				PRE	-	-	-	-	-	-	-	-
L-B	I953085			ISI	-	-	-	-	-	-	-	-
L2.20	#85		TENDON WIRE/STRAND	AUG	-	-	-	-	-	-	-	-
CC	CONTAINMENT			OWN	-	-	-	-	-	-	-	-
				PRE	-	-	-	-	-	-	-	-
L-B	I953086			ISI	-	-	-	-	-	-	-	-
L2.20	#86		TENDON WIRE/STRAND	AUG	-	-	-	-	-	-	-	-
CC	CONTAINMENT			OWN	-	-	-	-	-	-	-	-
				PRE	-	-	-	-	-	-	-	-
L-B	I953087			ISI	-	-	-	-	-	-	-	-
L2.20	#87		TENDON WIRE/STRAND	AUG	-	-	-	-	-	-	-	-
CC	CONTAINMENT			OWN	-	-	-	-	-	-	-	-
				PRE	-	-	-	-	-	-	-	-
L-B	I953088			ISI	-	-	-	-	-	-	-	-
L2.20	#88		TENDON WIRE/STRAND	AUG	-	-	-	-	-	-	-	-
CC	CONTAINMENT			OWN	-	-	-	-	-	-	-	-
				PRE	-	-	-	-	-	-	-	-
L-B	I953089			ISI	-	-	-	-	-	-	-	-
L2.20	#89		TENDON WIRE/STRAND	AUG	-	-	-	-	-	-	-	-
CC	CONTAINMENT			OWN	-	-	-	-	-	-	-	-
				PRE	-	-	-	-	-	-	-	-
L-B	I953090			ISI	-	-	-	-	-	-	-	-
L2.20	#90		TENDON WIRE/STRAND	AUG	-	-	-	-	-	-	-	-
CC	CONTAINMENT			OWN	-	-	-	-	-	-	-	-
				PRE	-	-	-	-	-	-	-	-

Category, ItemNO, Class	Summary / CompID / System	Scope / Method / Procedure	Iso No. Comp. Desc. Code Case		Period 1 97	Period 1 99	Period 1 00	Period 2 02	Period 2 03	Period 2 05	Period 3 06	Period 3 08
L-B	I953091			ISI	-	-	-	-	-	-	-	-
L2.20	#91		TENDON WIRE/STRAND	AUG	-	-	-	-	-	-	-	-
CC	CONTAINMENT			OWN	-	-	-	-	-	-	-	-
				PRE	-	-	-	-	-	-	-	-
L-B	I953092			ISI	-	-	-	-	-	-	-	-
L2.20	#92		TENDON WIRE/STRAND	AUG	-	-	-	-	-	-	-	-
CC	CONTAINMENT			OWN	-	-	-	-	-	-	-	-
				PRE	-	-	-	-	-	-	-	-
L-B	I953093			ISI	-	-	-	-	-	-	-	-
L2.20	#93		TENDON WIRE/STRAND	AUG	-	-	-	-	-	-	-	-
CC	CONTAINMENT			OWN	-	-	-	-	-	-	-	-
				PRE	-	-	-	-	-	-	-	-
L-B	I953094			ISI	-	-	-	-	-	-	-	-
L2.20	#94		TENDON WIRE/STRAND	AUG	-	-	-	-	-	-	-	-
CC	CONTAINMENT			OWN	-	-	-	-	-	-	-	-
				PRE	-	-	-	-	-	-	-	-
L-B	I953095			ISI	-	-	-	-	-	-	-	-
L2.20	#95		TENDON WIRE/STRAND	AUG	-	-	-	-	-	-	-	-
CC	CONTAINMENT			OWN	-	-	-	-	-	-	-	-
				PRE	-	-	-	-	-	-	-	-
L-B	I953096			ISI	-	-	-	-	-	-	-	-
L2.20	#96		TENDON WIRE/STRAND	AUG	-	-	-	-	-	-	-	-
CC	CONTAINMENT			OWN	-	-	-	-	-	-	-	-
				PRE	-	-	-	-	-	-	-	-
L-B	I953097			ISI	-	-	-	-	-	-	-	-
L2.20	#97		TENDON WIRE/STRAND	AUG	-	-	-	-	-	-	-	-
CC	CONTAINMENT			OWN	-	-	-	-	-	-	-	-
				PRE	-	-	-	-	-	-	-	-
L-B	I953098			ISI	-	-	-	-	-	-	-	-
L2.20	#98		TENDON WIRE/STRAND	AUG	-	-	-	-	-	-	-	-
CC	CONTAINMENT			OWN	-	-	-	-	-	-	-	-
				PRE	-	-	-	-	-	-	-	-
L-B	I953099			ISI	-	-	-	-	-	-	-	-
L2.20	#99		TENDON WIRE/STRAND	AUG	-	-	-	-	-	-	-	-
CC	CONTAINMENT			OWN	-	-	-	-	-	-	-	-
				PRE	-	-	-	-	-	-	-	-
L-B	I953100			ISI	-	-	-	-	-	-	-	-
L2.20	#100		TENDON WIRE/STRAND	AUG	-	-	-	-	-	-	-	-
CC	CONTAINMENT			OWN	-	-	-	-	-	-	-	-
				PRE	-	-	-	-	-	-	-	-

Category, ItemNO, Class	Summary / CompID / System	Scope / Method / Procedure	Iso No. Comp. Desc. Code Case		Period 1 97	Period 1 99	Period 1 00	Period 2 02	Period 2 03	Period 2 05	Period 3 06	Period 3 08
L-B	I953101			ISI	-	-	-	-	-	-	-	-
L2.20	#101		TENDON WIRE/STRAND	AUG	-	-	-	-	-	-	-	-
CC	CONTAINMENT			OWN	-	-	-	-	-	-	-	-
				PRE	-	-	-	-	-	-	-	-
L-B	I953102			ISI	-	-	-	-	-	-	-	-
L2.20	#102		TENDON WIRE/STRAND	AUG	-	-	-	-	-	-	-	-
CC	CONTAINMENT			OWN	-	-	-	-	-	-	-	-
				PRE	-	-	-	-	-	-	-	-
L-B	I953103			ISI	-	-	-	-	-	-	-	-
L2.20	#103		TENDON WIRE/STRAND	AUG	-	-	-	-	-	-	-	-
CC	CONTAINMENT			OWN	-	-	-	-	-	-	-	-
				PRE	-	-	-	-	-	-	-	-
L-B	I953104			ISI	-	-	-	-	-	-	-	-
L2.20	#104		TENDON WIRE/STRAND	AUG	-	-	-	-	-	-	-	-
CC	CONTAINMENT			OWN	-	-	-	-	-	-	-	-
				PRE	-	-	-	-	-	-	-	-
L-B	I953105	ISI/VT/FT		ISI	-	-	-	-	-	-	-	-
L2.20	#105	ISI/VT/VT-113	TENDON WIRE/STRAND	AUG	-	-	-	-	-	-	-	-
CC	CONTAINMENT			OWN	-	-	-	-	-	-	-	-
				PRE	-	-	-	-	-	-	-	-
L-B	I953106			ISI	-	-	-	-	-	-	-	-
L2.20	#106		TENDON WIRE/STRAND	AUG	-	-	-	-	-	-	-	-
CC	CONTAINMENT			OWN	-	-	-	-	-	-	-	-
				PRE	-	-	-	-	-	-	-	-
L-B	I953107			ISI	-	-	-	-	-	-	-	-
L2.20	#107		TENDON WIRE/STRAND	AUG	-	-	-	-	-	-	-	-
CC	CONTAINMENT			OWN	-	-	-	-	-	-	-	-
				PRE	-	-	-	-	-	-	-	-
L-B	I953108			ISI	-	-	-	-	-	-	-	-
L2.20	#108		TENDON WIRE/STRAND	AUG	-	-	-	-	-	-	-	-
CC	CONTAINMENT			OWN	-	-	-	-	-	-	-	-
				PRE	-	-	-	-	-	-	-	-
L-B	I953109			ISI	-	-	-	-	-	-	-	-
L2.20	#109		TENDON WIRE/STRAND	AUG	-	-	-	-	-	-	-	-
CC	CONTAINMENT			OWN	-	-	-	-	-	-	-	-
				PRE	-	-	-	-	-	-	-	-
L-B	I953110	ISI/VT/FT		ISI	-	-	-	-	-	-	-	-
L2.20	#110	ISI/VT/VT-113	TENDON WIRE/STRAND	AUG	-	-	-	-	-	-	-	-
CC	CONTAINMENT			OWN	-	-	-	-	-	-	-	-
				PRE	-	-	-	-	-	-	-	-

Category, ItemNO, Class	Summary / CompID / System	Scope / Method / Procedure	Iso No. Comp. Desc. Code Case		Period 1			Period 2			Period 3	
					97	99	00	02	03	05	06	08
L-B	I953111	ISI/VT/VT-113		ISI	-	-	-	-	-	s	-	-
L2.20	#111	ISI/VT/FT	TENDON WIRE/STRAND	AUG	-	-	-	-	-	-	-	-
CC	CONTAINMENT			OWN	-	-	-	-	-	-	-	-
				PRE	-	-	-	-	-	-	-	-
L-B	I953112	ISI/VT/FT		ISI	-	-	-	-	-	s	-	-
L2.20	#112	ISI/VT/VT-113	TENDON WIRE/STRAND	AUG	-	-	-	-	-	-	-	-
CC	CONTAINMENT	ISI/VT/VT-113		OWN	-	-	-	-	-	-	-	-
		ISI/VT/FT		PRE	-	-	-	-	-	-	-	-
L-B	I953113	ISI/VT/VT-113		ISI	-	-	-	-	-	s	-	-
L2.20	#113	ISI/VT/FT	TENDON WIRE/STRAND	AUG	-	-	-	-	-	-	-	-
CC	CONTAINMENT			OWN	-	-	-	-	-	-	-	-
				PRE	-	-	-	-	-	-	-	-
L-B	I953114	ISI/VT/VT-113		ISI	-	-	-	-	-	s	-	-
L2.20	#114	ISI/VT/FT	TENDON WIRE/STRAND	AUG	-	-	-	-	-	-	-	-
CC	CONTAINMENT			OWN	-	-	-	-	-	-	-	-
				PRE	-	-	-	-	-	-	-	-
L-B	I953115	ISI/VT/VT-113		ISI	-	-	-	-	-	s	-	-
L2.20	#115	ISI/VT/FT	TENDON WIRE/STRAND	AUG	-	-	-	-	-	-	-	-
CC	CONTAINMENT			OWN	-	-	-	-	-	-	-	-
				PRE	-	-	-	-	-	-	-	-
L-B	I953116	ISI/VT/VT-113		ISI	-	-	-	-	-	s	-	-
L2.20	#116	ISI/VT/FT	TENDON WIRE/STRAND	AUG	-	-	-	-	-	-	-	-
CC	CONTAINMENT			OWN	-	-	-	-	-	-	-	-
				PRE	-	-	-	-	-	-	-	-
L-B	I953117	ISI/VT/FT		ISI	-	-	-	-	-	s	-	-
L2.20	#117	ISI/VT/VT-113	TENDON WIRE/STRAND	AUG	-	-	-	-	-	-	-	-
CC	CONTAINMENT			OWN	-	-	-	-	-	-	-	-
				PRE	-	-	-	-	-	-	-	-
L-B	I953118	ISI/VT/VT-113		ISI	-	-	-	-	-	s	-	-
L2.20	#118	ISI/VT/FT	TENDON WIRE/STRAND	AUG	-	-	-	-	-	-	-	-
CC	CONTAINMENT			OWN	-	-	-	-	-	-	-	-
				PRE	-	-	-	-	-	-	-	-
L-B	I953119	ISI/VT/VT-113		ISI	-	-	-	-	-	s	-	-
L2.20	#119	ISI/VT/FT	TENDON WIRE/STRAND	AUG	-	-	-	-	-	-	-	-
CC	CONTAINMENT			OWN	-	-	-	-	-	-	-	-
				PRE	-	-	-	-	-	-	-	-
L-B	I953120	ISI/VT/VT-113		ISI	-	-	-	-	-	s	-	-
L2.20	#120	ISI/VT/FT	TENDON WIRE/STRAND	AUG	-	-	-	-	-	-	-	-
CC	CONTAINMENT			OWN	-	-	-	-	-	-	-	-
				PRE	-	-	-	-	-	-	-	-

Category, ItemNO, Class	Summary / CompID / System	Scope / Method / Procedure	Iso No. Comp. Desc. Code Case		Period 1			Period 2			Period 3	
					97	99	00	02	03	05	06	08
L-B	I953121	ISI/VT/VT-113		ISI	-	-	-	-	-	s	-	-
L2.20	#121	ISI/VT/FT	TENDON WIRE/STRAND	AUG	-	-	-	-	-	-	-	-
CC	CONTAINMENT			OWN	-	-	-	-	-	-	-	-
				PRE	-	-	-	-	-	-	-	-
L-B	I953122	ISI/VT/FT		ISI	-	-	-	-	-	s	-	-
L2.20	#122	ISI/VT/VT-113	TENDON WIRE/STRAND	AUG	-	-	-	-	-	-	-	-
CC	CONTAINMENT	ISI/VT/VT-113		OWN	-	-	-	-	-	-	-	-
		ISI/VT/FT		PRE	-	-	-	-	-	-	-	-
L-B	I953123			ISI	-	-	-	-	-	-	-	-
L2.20	#123		TENDON WIRE/STRAND	AUG	-	-	-	-	-	-	-	-
CC	CONTAINMENT			OWN	-	-	-	-	-	-	-	-
				PRE	-	-	-	-	-	-	-	-
L-B	I953124			ISI	-	-	-	-	-	-	-	-
L2.20	#124		TENDON WIRE/STRAND	AUG	-	-	-	-	-	-	-	-
CC	CONTAINMENT			OWN	-	-	-	-	-	-	-	-
				PRE	-	-	-	-	-	-	-	-
L-B	I953125			ISI	-	-	-	-	-	-	-	-
L2.20	#125		TENDON WIRE/STRAND	AUG	-	-	-	-	-	-	-	-
CC	CONTAINMENT			OWN	-	-	-	-	-	-	-	-
				PRE	-	-	-	-	-	-	-	-
L-B	I953126	ISI/VT/VT-113		ISI	-	-	-	-	-	s	-	-
L2.20	#126	ISI/VT/FT	TENDON WIRE/STRAND	AUG	-	-	-	-	-	-	-	-
CC	CONTAINMENT			OWN	-	-	-	-	-	-	-	-
				PRE	-	-	-	-	-	-	-	-
L-B	I953127			ISI	-	-	-	-	-	-	-	-
L2.20	#127		TENDON WIRE/STRAND	AUG	-	-	-	-	-	-	-	-
CC	CONTAINMENT			OWN	-	-	-	-	-	-	-	-
				PRE	-	-	-	-	-	-	-	-
L-B	I953128	ISI/VT/FT		ISI	-	-	-	-	-	-	-	-
L2.20	#128	ISI/VT/VT-113	TENDON WIRE/STRAND	AUG	-	-	-	-	-	-	-	-
CC	CONTAINMENT			OWN	-	-	-	-	-	-	-	-
				PRE	-	-	-	-	-	-	-	-
L-B	I953129	ISI/VT/FT		ISI	-	-	-	-	-	-	-	-
L2.20	#129	ISI/VT/VT-113	TENDON WIRE/STRAND	AUG	-	-	-	-	-	-	-	-
CC	CONTAINMENT			OWN	-	-	-	-	-	-	-	-
				PRE	-	-	-	-	-	-	-	-
L-B	I953130			ISI	-	-	-	-	-	-	-	-
L2.20	#130		TENDON WIRE/STRAND	AUG	-	-	-	-	-	-	-	-
CC	CONTAINMENT			OWN	-	-	-	-	-	-	-	-
				PRE	-	-	-	-	-	-	-	-

Category, ItemNO, Class	Summary / CompID / System	Scope / Method / Procedure	Iso No. Comp. Desc. Code Case		Period 1 97	Period 1 99	Period 1 00	Period 2 02	Period 2 03	Period 2 05	Period 3 06	Period 3 08
L-B	I953131			ISI	-	-	-	-	-	-	-	-
L2.20	#131		TENDON WIRE/STRAND	AUG	-	-	-	-	-	-	-	-
CC	CONTAINMENT			OWN	-	-	-	-	-	-	-	-
				PRE	-	-	-	-	-	-	-	-
L-B	I953132	ISI/VT/FT		ISI	-	-	-	-	-	s	-	-
L2.20	#132	ISI/VT/VT-113	TENDON WIRE/STRAND	AUG	-	-	-	-	-	-	-	-
CC	CONTAINMENT			OWN	-	-	-	-	-	-	-	-
				PRE	-	-	-	-	-	-	-	-
L-B	I953133			ISI	-	-	-	-	-	-	-	-
L2.20	#133		TENDON WIRE/STRAND	AUG	-	-	-	-	-	-	-	-
CC	CONTAINMENT			OWN	-	-	-	-	-	-	-	-
				PRE	-	-	-	-	-	-	-	-
L-B	I953134			ISI	-	-	-	-	-	-	-	-
L2.20	#134		TENDON WIRE/STRAND	AUG	-	-	-	-	-	-	-	-
CC	CONTAINMENT			OWN	-	-	-	-	-	-	-	-
				PRE	-	-	-	-	-	-	-	-
L-B	I953135			ISI	-	-	-	-	-	-	-	-
L2.20	#135		TENDON WIRE/STRAND	AUG	-	-	-	-	-	-	-	-
CC	CONTAINMENT			OWN	-	-	-	-	-	-	-	-
				PRE	-	-	-	-	-	-	-	-
L-B	I953136			ISI	-	-	-	-	-	-	-	-
L2.20	#136		TENDON WIRE/STRAND	AUG	-	-	-	-	-	-	-	-
CC	CONTAINMENT			OWN	-	-	-	-	-	-	-	-
				PRE	-	-	-	-	-	-	-	-
L-B	I953137			ISI	-	-	-	-	-	-	-	-
L2.20	#137		TENDON WIRE/STRAND	AUG	-	-	-	-	-	-	-	-
CC	CONTAINMENT			OWN	-	-	-	-	-	-	-	-
				PRE	-	-	-	-	-	-	-	-
L-B	I953138			ISI	-	-	-	-	-	-	-	-
L2.20	#138		TENDON WIRE/STRAND	AUG	-	-	-	-	-	-	-	-
CC	CONTAINMENT			OWN	-	-	-	-	-	-	-	-
				PRE	-	-	-	-	-	-	-	-
L-B	I953139			ISI	-	-	-	-	-	-	-	-
L2.20	#139		TENDON WIRE/STRAND	AUG	-	-	-	-	-	-	-	-
CC	CONTAINMENT			OWN	-	-	-	-	-	-	-	-
				PRE	-	-	-	-	-	-	-	-
L-B	I953140			ISI	-	-	-	-	-	-	-	-
L2.20	#140		TENDON WIRE/STRAND	AUG	-	-	-	-	-	-	-	-
CC	CONTAINMENT			OWN	-	-	-	-	-	-	-	-
				PRE	-	-	-	-	-	-	-	-

Category, ItemNO, Class	Summary / CompID / System	Scope / Method / Procedure	Iso No. Comp. Desc. Code Case		Period 1 97	Period 1 99	Period 1 00	Period 2 02	Period 2 03	Period 2 05	Period 3 06	Period 3 08
L-B	I953141			ISI	-	-	-	-	-	-	-	-
L2.20	#141		TENDON WIRE/STRAND	AUG	-	-	-	-	-	-	-	-
CC	CONTAINMENT			OWN	-	-	-	-	-	-	-	-
				PRE	-	-	-	-	-	-	-	-
L-B	I953142			ISI	-	-	-	-	-	-	-	-
L2.20	#142		TENDON WIRE/STRAND	AUG	-	-	-	-	-	-	-	-
CC	CONTAINMENT			OWN	-	-	-	-	-	-	-	-
				PRE	-	-	-	-	-	-	-	-
L-B	I953143			ISI	-	-	-	-	-	-	-	-
L2.20	#143		TENDON WIRE/STRAND	AUG	-	-	-	-	-	-	-	-
CC	CONTAINMENT			OWN	-	-	-	-	-	-	-	-
				PRE	-	-	-	-	-	-	-	-
L-B	I953144			ISI	-	-	-	-	-	-	-	-
L2.20	#144		TENDON WIRE/STRAND	AUG	-	-	-	-	-	-	-	-
CC	CONTAINMENT			OWN	-	-	-	-	-	-	-	-
				PRE	-	-	-	-	-	-	-	-
L-B	I953145	ISI/VT/FT		ISI	-	-	-	-	-	s	-	-
L2.20	#145	ISI/VT/VT-113	TENDON WIRE/STRAND	AUG	-	-	-	-	-	-	-	-
CC	CONTAINMENT			OWN	-	-	-	-	-	-	-	-
				PRE	-	-	-	-	-	-	-	-
L-B	I953146			ISI	-	-	-	-	-	-	-	-
L2.20	#146		TENDON WIRE/STRAND	AUG	-	-	-	-	-	-	-	-
CC	CONTAINMENT			OWN	-	-	-	-	-	-	-	-
				PRE	-	-	-	-	-	-	-	-
L-B	I953147			ISI	-	-	-	-	-	-	-	-
L2.20	#147		TENDON WIRE/STRAND	AUG	-	-	-	-	-	-	-	-
CC	CONTAINMENT			OWN	-	-	-	-	-	-	-	-
				PRE	-	-	-	-	-	-	-	-
L-B	I953148			ISI	-	-	-	-	-	-	-	-
L2.20	#148		TENDON WIRE/STRAND	AUG	-	-	-	-	-	-	-	-
CC	CONTAINMENT			OWN	-	-	-	-	-	-	-	-
				PRE	-	-	-	-	-	-	-	-
L-B	I953149			ISI	-	-	-	-	-	-	-	-
L2.20	#149		TENDON WIRE/STRAND	AUG	-	-	-	-	-	-	-	-
CC	CONTAINMENT			OWN	-	-	-	-	-	-	-	-
				PRE	-	-	-	-	-	-	-	-
L-B	I953150			ISI	-	-	-	-	-	-	-	-
L2.20	#150		TENDON WIRE/STRAND	AUG	-	-	-	-	-	-	-	-
CC	CONTAINMENT			OWN	-	-	-	-	-	-	-	-
				PRE	-	-	-	-	-	-	-	-

Category, ItemNO, Class	Summary / CompID / System	Scope / Method / Procedure	Iso No. Comp. Desc. Code Case		Period 1 97	Period 1 99	Period 1 00	Period 2 02	Period 2 03	Period 2 05	Period 3 06	Period 3 08
L-B	I953151			ISI	-	-	-	-	-	-	-	-
L2.20	#151		TENDON WIRE/STRAND	AUG	-	-	-	-	-	-	-	-
CC	CONTAINMENT			OWN	-	-	-	-	-	-	-	-
				PRE	-	-	-	-	-	-	-	-
L-B	I953152	ISI/VT/FT		ISI	-	-	-	-	-	s	-	-
L2.20	#152	ISI/VT/VT-113	TENDON WIRE/STRAND	AUG	-	-	-	-	-	-	-	-
CC	CONTAINMENT			OWN	-	-	-	-	-	-	-	-
				PRE	-	-	-	-	-	-	-	-
L-B	I953153			ISI	-	-	-	-	-	-	-	-
L2.20	#153		TENDON WIRE/STRAND	AUG	-	-	-	-	-	-	-	-
CC	CONTAINMENT			OWN	-	-	-	-	-	-	-	-
				PRE	-	-	-	-	-	-	-	-
L-B	I953154			ISI	-	-	-	-	-	-	-	-
L2.20	#154		TENDON WIRE/STRAND	AUG	-	-	-	-	-	-	-	-
CC	CONTAINMENT			OWN	-	-	-	-	-	-	-	-
				PRE	-	-	-	-	-	-	-	-
L-B	I953155			ISI	-	-	-	-	-	-	-	-
L2.20	#155		TENDON WIRE/STRAND	AUG	-	-	-	-	-	-	-	-
CC	CONTAINMENT			OWN	-	-	-	-	-	-	-	-
				PRE	-	-	-	-	-	-	-	-
L-B	I953156			ISI	-	-	-	-	-	-	-	-
L2.20	#156		TENDON WIRE/STRAND	AUG	-	-	-	-	-	-	-	-
CC	CONTAINMENT			OWN	-	-	-	-	-	-	-	-
				PRE	-	-	-	-	-	-	-	-
L-B	I953157			ISI	-	-	-	-	-	-	-	-
L2.20	#157		TENDON WIRE/STRAND	AUG	-	-	-	-	-	-	-	-
CC	CONTAINMENT			OWN	-	-	-	-	-	-	-	-
				PRE	-	-	-	-	-	-	-	-
L-B	I953158			ISI	-	-	-	-	-	-	-	-
L2.20	#158		TENDON WIRE/STRAND	AUG	-	-	-	-	-	-	-	-
CC	CONTAINMENT			OWN	-	-	-	-	-	-	-	-
				PRE	-	-	-	-	-	-	-	-
L-B	I953159	ISI/VT/FT		ISI	-	-	-	-	-	s	-	-
L2.20	#159	ISI/VT/VT-113	TENDON WIRE/STRAND	AUG	-	-	-	-	-	-	-	-
CC	CONTAINMENT			OWN	-	-	-	-	-	-	-	-
				PRE	-	-	-	-	-	-	-	-
L-B	I953160	ISI/VT/FT		ISI	-	-	-	-	-	-	-	-
L2.20	#160	ISI/VT/VT-113	TENDON WIRE/STRAND	AUG	-	-	-	-	-	-	-	-
CC	CONTAINMENT			OWN	-	-	-	-	-	-	-	-
				PRE	-	-	-	-	-	-	-	-

Category, ItemNO, Class	Summary / CompID / System	Scope / Method / Procedure	Iso No. Comp. Desc. Code Case		Period 1 97	Period 1 99	Period 1 00	Period 2 02	Period 2 03	Period 2 05	Period 3 06	Period 3 08
L-B	I954001			ISI	-	-	-	-	-	-	-	-
L2.30	#1		TENDON-ANCHORAGE HDWARE & SUR CONCRETE	AUG	-	-	-	-	-	-	-	-
CC	CONTAINMENT			OWN	-	-	-	-	-	-	-	-
				PRE	-	-	-	-	-	-	-	-
L-B	I954002	ISI/VT/VT-113		ISI	-	-	r	c	-	-	-	-
L2.30	#2		TENDON-ANCHORAGE HDWARE & SUR CONCRETE	AUG	-	-	-	-	-	-	-	-
CC	CONTAINMENT			OWN	-	-	-	-	-	-	-	-
				PRE	-	-	-	-	-	-	-	-
L-B	I954003			ISI	-	-	-	-	-	-	-	-
L2.30	#3		TENDON-ANCHORAGE HDWARE & SUR CONCRETE	AUG	-	-	-	-	-	-	-	-
CC	CONTAINMENT			OWN	-	-	-	-	-	-	-	-
				PRE	-	-	-	-	-	-	-	-
L-B	I954004	ISI/VT/VT-113		ISI	-	-	r	c	-	-	-	-
L2.30	#4		TENDON-ANCHORAGE HDWARE & SUR CONCRETE	AUG	-	-	-	-	-	-	-	-
CC	CONTAINMENT			OWN	-	-	-	-	-	-	-	-
				PRE	-	-	-	-	-	-	-	-
L-B	I954005	ISI/VT/VT-113		ISI	-	-	-	-	-	s	-	-
L2.30	#5		TENDON-ANCHORAGE HDWARE & SUR CONCRETE	AUG	-	-	-	-	-	-	-	-
CC	CONTAINMENT			OWN	-	-	-	-	-	-	-	-
				PRE	-	-	-	-	-	-	-	-
L-B	I954006			ISI	-	-	-	-	-	-	-	-
L2.30	#6		TENDON-ANCHORAGE HDWARE & SUR CONCRETE	AUG	-	-	-	-	-	-	-	-
CC	CONTAINMENT			OWN	-	-	-	-	-	-	-	-
				PRE	-	-	-	-	-	-	-	-
L-B	I954007			ISI	-	-	-	-	-	-	-	-
L2.30	#7		TENDON-ANCHORAGE HDWARE & SUR CONCRETE	AUG	-	-	-	-	-	-	-	-
CC	CONTAINMENT			OWN	-	-	-	-	-	-	-	-
				PRE	-	-	-	-	-	-	-	-
L-B	I954008			ISI	-	-	-	-	-	-	-	-
L2.30	#8		TENDON-ANCHORAGE HDWARE & SUR CONCRETE	AUG	-	-	-	-	-	-	-	-
CC	CONTAINMENT			OWN	-	-	-	-	-	-	-	-
				PRE	-	-	-	-	-	-	-	-
L-B	I954009	ISI/VT/VT-113		ISI	-	-	r	c	-	-	-	-
L2.30	#9		TENDON-ANCHORAGE HDWARE & SUR CONCRETE	AUG	-	-	-	-	-	-	-	-
CC	CONTAINMENT			OWN	-	-	-	-	-	-	-	-
				PRE	-	-	-	-	-	-	-	-
L-B	I954010	ISI/VT/VT-113		ISI	-	-	r	c	-	-	-	-
L2.30	#10		TENDON-ANCHORAGE HDWARE & SUR CONCRETE	AUG	-	-	-	-	-	-	-	-
CC	CONTAINMENT			OWN	-	-	-	-	-	-	-	-
				PRE	-	-	-	-	-	-	-	-

Category, ItemNO, Class	Summary / CompID / System	Scope / Method / Procedure	Iso No. Comp. Desc. Code Case		Period 1 97	Period 1 99	Period 1 00	Period 2 02	Period 2 03	Period 2 05	Period 3 06	Period 3 08
L-B	I954011			ISI	-	-	-	-	-	-	-	-
L2.30	#11		TENDON-ANCHORAGE HDWARE & SUR CONCRETE	AUG	-	-	-	-	-	-	-	-
CC	CONTAINMENT			OWN	-	-	-	-	-	-	-	-
				PRE	-	-	-	-	-	-	-	-
L-B	I954012			ISI	-	-	-	-	-	-	-	-
L2.30	#12		TENDON-ANCHORAGE HDWARE & SUR CONCRETE	AUG	-	-	-	-	-	-	-	-
CC	CONTAINMENT			OWN	-	-	-	-	-	-	-	-
				PRE	-	-	-	-	-	-	-	-
L-B	I954013			ISI	-	-	-	-	-	-	-	-
L2.30	#13		TENDON-ANCHORAGE HDWARE & SUR CONCRETE	AUG	-	-	-	-	-	-	-	-
CC	CONTAINMENT			OWN	-	-	-	-	-	-	-	-
				PRE	-	-	-	-	-	-	-	-
L-B	I954014	ISI/VT/VT-113		ISI	-	-	-	-	-	s	-	-
L2.30	#14		TENDON-ANCHORAGE HDWARE & SUR CONCRETE	AUG	-	-	-	-	-	-	-	-
CC	CONTAINMENT			OWN	-	-	-	-	-	-	-	-
				PRE	-	-	-	-	-	-	-	-
L-B	I954015			ISI	-	-	-	-	-	-	-	-
L2.30	#15		TENDON-ANCHORAGE HDWARE & SUR CONCRETE	AUG	-	-	-	-	-	-	-	-
CC	CONTAINMENT			OWN	-	-	-	-	-	-	-	-
				PRE	-	-	-	-	-	-	-	-
L-B	I954016	ISI/VT/VT-113		ISI	-	-	-	-	-	s	-	-
L2.30	#16		TENDON-ANCHORAGE HDWARE & SUR CONCRETE	AUG	-	-	-	-	-	-	-	-
CC	CONTAINMENT			OWN	-	-	-	-	-	-	-	-
				PRE	-	-	-	-	-	-	-	-
L-B	I954017			ISI	-	-	-	-	-	-	-	-
L2.30	#17		TENDON-ANCHORAGE HDWARE & SUR CONCRETE	AUG	-	-	-	-	-	-	-	-
CC	CONTAINMENT			OWN	-	-	-	-	-	-	-	-
				PRE	-	-	-	-	-	-	-	-
L-B	I954018			ISI	-	-	-	-	-	-	-	-
L2.30	#18		TENDON-ANCHORAGE HDWARE & SUR CONCRETE	AUG	-	-	-	-	-	-	-	-
CC	CONTAINMENT			OWN	-	-	-	-	-	-	-	-
				PRE	-	-	-	-	-	-	-	-
L-B	I954019			ISI	-	-	-	-	-	-	-	-
L2.30	#19		TENDON-ANCHORAGE HDWARE & SUR CONCRETE	AUG	-	-	-	-	-	-	-	-
CC	CONTAINMENT			OWN	-	-	-	-	-	-	-	-
				PRE	-	-	-	-	-	-	-	-
L-B	I954020			ISI	-	-	-	-	-	-	-	-
L2.30	#20		TENDON-ANCHORAGE HDWARE & SUR CONCRETE	AUG	-	-	-	-	-	-	-	-
CC	CONTAINMENT			OWN	-	-	-	-	-	-	-	-
				PRE	-	-	-	-	-	-	-	-

Category, ItemNO, Class	Summary / CompID / System	Scope / Method / Procedure	Iso No. Comp. Desc. Code Case		Period 1 97	Period 1 99	Period 1 00	Period 2 02	Period 2 03	Period 2 05	Period 3 06	Period 3 08
L-B	I954021			ISI	-	-	-	-	-	-	-	-
L2.30	#21		TENDON-ANCHORAGE HDWARE & SUR CONCRETE	AUG	-	-	-	-	-	-	-	-
CC	CONTAINMENT			OWN	-	-	-	-	-	-	-	-
				PRE	-	-	-	-	-	-	-	-
L-B	I954022			ISI	-	-	-	-	-	-	-	-
L2.30	#22		TENDON-ANCHORAGE HDWARE & SUR CONCRETE	AUG	-	-	-	-	-	-	-	-
CC	CONTAINMENT			OWN	-	-	-	-	-	-	-	-
				PRE	-	-	-	-	-	-	-	-
L-B	I954023			ISI	-	-	-	-	-	-	-	-
L2.30	#23		TENDON-ANCHORAGE HDWARE & SUR CONCRETE	AUG	-	-	-	-	-	-	-	-
CC	CONTAINMENT			OWN	-	-	-	-	-	-	-	-
				PRE	-	-	-	-	-	-	-	-
L-B	I954024			ISI	-	-	-	-	-	-	-	-
L2.30	#24		TENDON-ANCHORAGE HDWARE & SUR CONCRETE	AUG	-	-	-	-	-	-	-	-
CC	CONTAINMENT			OWN	-	-	-	-	-	-	-	-
				PRE	-	-	-	-	-	-	-	-
L-B	I954025			ISI	-	-	-	-	-	-	-	-
L2.30	#25		TENDON-ANCHORAGE HDWARE & SUR CONCRETE	AUG	-	-	-	-	-	-	-	-
CC	CONTAINMENT			OWN	-	-	-	-	-	-	-	-
				PRE	-	-	-	-	-	-	-	-
L-B	I954026			ISI	-	-	-	-	-	-	-	-
L2.30	#26		TENDON-ANCHORAGE HDWARE & SUR CONCRETE	AUG	-	-	-	-	-	-	-	-
CC	CONTAINMENT			OWN	-	-	-	-	-	-	-	-
				PRE	-	-	-	-	-	-	-	-
L-B	I954027			ISI	-	-	-	-	-	-	-	-
L2.30	#27		TENDON-ANCHORAGE HDWARE & SUR CONCRETE	AUG	-	-	-	-	-	-	-	-
CC	CONTAINMENT			OWN	-	-	-	-	-	-	-	-
				PRE	-	-	-	-	-	-	-	-
L-B	I954028			ISI	-	-	-	-	-	-	-	-
L2.30	#28		TENDON-ANCHORAGE HDWARE & SUR CONCRETE	AUG	-	-	-	-	-	-	-	-
CC	CONTAINMENT			OWN	-	-	-	-	-	-	-	-
				PRE	-	-	-	-	-	-	-	-
L-B	I954029			ISI	-	-	-	-	-	-	-	-
L2.30	#29		TENDON-ANCHORAGE HDWARE & SUR CONCRETE	AUG	-	-	-	-	-	-	-	-
CC	CONTAINMENT			OWN	-	-	-	-	-	-	-	-
				PRE	-	-	-	-	-	-	-	-
L-B	I954030	ISI/VT/VT-113		ISI	-	-	-	-	-	s	-	-
L2.30	#30		TENDON-ANCHORAGE HDWARE & SUR CONCRETE	AUG	-	-	-	-	-	-	-	-
CC	CONTAINMENT			OWN	-	-	-	-	-	-	-	-
				PRE	-	-	-	-	-	-	-	-

Category, ItemNO, Class	Summary / CompID / System	Scope / Method / Procedure	Iso No. Comp. Desc. Code Case		Period 1 97	Period 1 99	Period 1 00	Period 2 02	Period 2 03	Period 2 05	Period 3 06	Period 3 08
L-B	I954031			ISI	-	-	-	-	-	-	-	-
L2.30	#31		TENDON-ANCHORAGE HDWARE & SUR CONCRETE	AUG	-	-	-	-	-	-	-	-
CC	CONTAINMENT			OWN	-	-	-	-	-	-	-	-
				PRE	-	-	-	-	-	-	-	-
L-B	I954032	ISI/VT/VT-113		ISI	-	-	-	-	-	s	-	-
L2.30	#32		TENDON-ANCHORAGE HDWARE & SUR CONCRETE	AUG	-	-	-	-	-	-	-	-
CC	CONTAINMENT			OWN	-	-	-	-	-	-	-	-
				PRE	-	-	-	-	-	-	-	-
L-B	I954033	ISI/VT/VT-113		ISI	-	-	-	-	-	s	-	-
L2.30	#33		TENDON-ANCHORAGE HDWARE & SUR CONCRETE	AUG	-	-	-	-	-	-	-	-
CC	CONTAINMENT			OWN	-	-	-	-	-	-	-	-
				PRE	-	-	-	-	-	-	-	-
L-B	I954034	ISI/VT/VT-113		ISI	-	-	-	-	-	s	-	-
L2.30	#34		TENDON-ANCHORAGE HDWARE & SUR CONCRETE	AUG	-	-	-	-	-	-	-	-
CC	CONTAINMENT			OWN	-	-	-	-	-	-	-	-
				PRE	-	-	-	-	-	-	-	-
L-B	I954035	ISI/VT/VT-113		ISI	-	-	-	-	-	s	-	-
L2.30	#35		TENDON-ANCHORAGE HDWARE & SUR CONCRETE	AUG	-	-	-	-	-	-	-	-
CC	CONTAINMENT			OWN	-	-	-	-	-	-	-	-
				PRE	-	-	-	-	-	-	-	-
L-B	I954036	ISI/VT/VT-113		ISI	-	-	-	-	-	s	-	-
L2.30	#36		TENDON-ANCHORAGE HDWARE & SUR CONCRETE	AUG	-	-	-	-	-	-	-	-
CC	CONTAINMENT			OWN	-	-	-	-	-	-	-	-
				PRE	-	-	-	-	-	-	-	-
L-B	I954037	ISI/VT/VT-113		ISI	-	-	-	-	-	s	-	-
L2.30	#37		TENDON-ANCHORAGE HDWARE & SUR CONCRETE	AUG	-	-	-	-	-	-	-	-
CC	CONTAINMENT			OWN	-	-	-	-	-	-	-	-
				PRE	-	-	-	-	-	-	-	-
L-B	I954038	ISI/VT/VT-113		ISI	-	-	-	-	-	s	-	-
L2.30	#38		TENDON-ANCHORAGE HDWARE & SUR CONCRETE	AUG	-	-	-	-	-	-	-	-
CC	CONTAINMENT			OWN	-	-	-	-	-	-	-	-
				PRE	-	-	-	-	-	-	-	-
L-B	I954039	ISI/VT/VT-113		ISI	-	-	-	-	-	s	-	-
L2.30	#39		TENDON-ANCHORAGE HDWARE & SUR CONCRETE	AUG	-	-	-	-	-	-	-	-
CC	CONTAINMENT			OWN	-	-	-	-	-	-	-	-
				PRE	-	-	-	-	-	-	-	-
L-B	I954040			ISI	-	-	-	-	-	-	-	-
L2.30	#40		TENDON-ANCHORAGE HDWARE & SUR CONCRETE	AUG	-	-	-	-	-	-	-	-
CC	CONTAINMENT			OWN	-	-	-	-	-	-	-	-
				PRE	-	-	-	-	-	-	-	-

Category, ItemNO, Class	Summary / CompID / System	Scope / Method / Procedure	Iso No. Comp. Desc. Code Case		Period 1			Period 2			Period 3	
					97	99	00	02	03	05	06	08
L-B	I954041			ISI	-	-	-	-	-	-	-	-
L2.30	#41		TENDON-ANCHORAGE HDWARE & SUR CONCRETE	AUG	-	-	-	-	-	-	-	-
CC	CONTAINMENT			OWN	-	-	-	-	-	-	-	-
				PRE	-	-	-	-	-	-	-	-
L-B	I954042			ISI	-	-	-	-	-	-	-	-
L2.30	#42		TENDON-ANCHORAGE HDWARE & SUR CONCRETE	AUG	-	-	-	-	-	-	-	-
CC	CONTAINMENT			OWN	-	-	-	-	-	-	-	-
				PRE	-	-	-	-	-	-	-	-
L-B	I954043			ISI	-	-	-	-	-	-	-	-
L2.30	#43		TENDON-ANCHORAGE HDWARE & SUR CONCRETE	AUG	-	-	-	-	-	-	-	-
CC	CONTAINMENT			OWN	-	-	-	-	-	-	-	-
				PRE	-	-	-	-	-	-	-	-
L-B	I954044			ISI	-	-	-	-	-	-	-	-
L2.30	#44		TENDON-ANCHORAGE HDWARE & SUR CONCRETE	AUG	-	-	-	-	-	-	-	-
CC	CONTAINMENT			OWN	-	-	-	-	-	-	-	-
				PRE	-	-	-	-	-	-	-	-
L-B	I954045			ISI	-	-	-	-	-	-	-	-
L2.30	#45		TENDON-ANCHORAGE HDWARE & SUR CONCRETE	AUG	-	-	-	-	-	-	-	-
CC	CONTAINMENT			OWN	-	-	-	-	-	-	-	-
				PRE	-	-	-	-	-	-	-	-
L-B	I954046			ISI	-	-	-	-	-	-	-	-
L2.30	#46		TENDON-ANCHORAGE HDWARE & SUR CONCRETE	AUG	-	-	-	-	-	-	-	-
CC	CONTAINMENT			OWN	-	-	-	-	-	-	-	-
				PRE	-	-	-	-	-	-	-	-
L-B	I954047			ISI	-	-	-	-	-	-	-	-
L2.30	#47		TENDON-ANCHORAGE HDWARE & SUR CONCRETE	AUG	-	-	-	-	-	-	-	-
CC	CONTAINMENT			OWN	-	-	-	-	-	-	-	-
				PRE	-	-	-	-	-	-	-	-
L-B	I954048			ISI	-	-	-	-	-	-	-	-
L2.30	#48		TENDON-ANCHORAGE HDWARE & SUR CONCRETE	AUG	-	-	-	-	-	-	-	-
CC	CONTAINMENT			OWN	-	-	-	-	-	-	-	-
				PRE	-	-	-	-	-	-	-	-
L-B	I954049			ISI	-	-	-	-	-	-	-	-
L2.30	#49		TENDON-ANCHORAGE HDWARE & SUR CONCRETE	AUG	-	-	-	-	-	-	-	-
CC	CONTAINMENT			OWN	-	-	-	-	-	-	-	-
				PRE	-	-	-	-	-	-	-	-
L-B	I954050			ISI	-	-	-	-	-	-	-	-
L2.30	#50		TENDON-ANCHORAGE HDWARE & SUR CONCRETE	AUG	-	-	-	-	-	-	-	-
CC	CONTAINMENT			OWN	-	-	-	-	-	-	-	-
				PRE	-	-	-	-	-	-	-	-

Category, ItemNO, Class	Summary / CompID / System	Scope / Method / Procedure	Iso No. Comp. Desc. Code Case		Period 1 97	Period 1 99	Period 1 00	Period 2 02	Period 2 03	Period 2 05	Period 3 06	Period 3 08
L-B	I954051			ISI	-	-	-	-	-	-	-	-
L2.30	#51		TENDON-ANCHORAGE HDWARE & SUR CONCRETE	AUG	-	-	-	-	-	-	-	-
CC	CONTAINMENT			OWN	-	-	-	-	-	-	-	-
				PRE	-	-	-	-	-	-	-	-
L-B	I954052			ISI	-	-	-	-	-	-	-	-
L2.30	#52		TENDON-ANCHORAGE HDWARE & SUR CONCRETE	AUG	-	-	-	-	-	-	-	-
CC	CONTAINMENT			OWN	-	-	-	-	-	-	-	-
				PRE	-	-	-	-	-	-	-	-
L-B	I954053			ISI	-	-	-	-	-	-	-	-
L2.30	#53		TENDON-ANCHORAGE HDWARE & SUR CONCRETE	AUG	-	-	-	-	-	-	-	-
CC	CONTAINMENT			OWN	-	-	-	-	-	-	-	-
				PRE	-	-	-	-	-	-	-	-
L-B	I954054			ISI	-	-	-	-	-	-	-	-
L2.30	#54		TENDON-ANCHORAGE HDWARE & SUR CONCRETE	AUG	-	-	-	-	-	-	-	-
CC	CONTAINMENT			OWN	-	-	-	-	-	-	-	-
				PRE	-	-	-	-	-	-	-	-
L-B	I954055			ISI	-	-	-	-	-	-	-	-
L2.30	#55		TENDON-ANCHORAGE HDWARE & SUR CONCRETE	AUG	-	-	-	-	-	-	-	-
CC	CONTAINMENT			OWN	-	-	-	-	-	-	-	-
				PRE	-	-	-	-	-	-	-	-
L-B	I954056	ISI/VT/VT-113		ISI	-	-	-	-	-	s	-	-
L2.30	#56		TENDON-ANCHORAGE HDWARE & SUR CONCRETE	AUG	-	-	-	-	-	-	-	-
CC	CONTAINMENT			OWN	-	-	-	-	-	-	-	-
				PRE	-	-	-	-	-	-	-	-
L-B	I954057	ISI/VT/VT-113		ISI	-	-	r	c	-	-	-	-
L2.30	#57		TENDON-ANCHORAGE HDWARE & SUR CONCRETE	AUG	-	-	-	-	-	-	-	-
CC	CONTAINMENT			OWN	-	-	-	-	-	-	-	-
				PRE	-	-	-	-	-	-	-	-
L-B	I954058	ISI/VT/VT-113		ISI	-	-	-	-	-	s	-	-
L2.30	#58		TENDON-ANCHORAGE HDWARE & SUR CONCRETE	AUG	-	-	-	-	-	-	-	-
CC	CONTAINMENT			OWN	-	-	-	-	-	-	-	-
				PRE	-	-	-	-	-	-	-	-
L-B	I954059			ISI	-	-	-	-	-	-	-	-
L2.30	#59		TENDON-ANCHORAGE HDWARE & SUR CONCRETE	AUG	-	-	-	-	-	-	-	-
CC	CONTAINMENT			OWN	-	-	-	-	-	-	-	-
				PRE	-	-	-	-	-	-	-	-
L-B	I954060			ISI	-	-	-	-	-	-	-	-
L2.30	#60		TENDON-ANCHORAGE HDWARE & SUR CONCRETE	AUG	-	-	-	-	-	-	-	-
CC	CONTAINMENT			OWN	-	-	-	-	-	-	-	-
				PRE	-	-	-	-	-	-	-	-

Category, ItemNO, Class	Summary / CompID / System	Scope / Method / Procedure	Iso No. Comp. Desc. Code Case		Period 1 97	Period 1 99	Period 1 00	Period 2 02	Period 2 03	Period 2 05	Period 3 06	Period 3 08
L-B	I954061			ISI	-	-	-	-	-	-	-	-
L2.30	#61		TENDON-ANCHORAGE HDWARE & SUR CONCRETE	AUG	-	-	-	-	-	-	-	-
CC	CONTAINMENT			OWN	-	-	-	-	-	-	-	-
				PRE	-	-	-	-	-	-	-	-
L-B	I954062			ISI	-	-	-	-	-	-	-	-
L2.30	#62		TENDON-ANCHORAGE HDWARE & SUR CONCRETE	AUG	-	-	-	-	-	-	-	-
CC	CONTAINMENT			OWN	-	-	-	-	-	-	-	-
				PRE	-	-	-	-	-	-	-	-
L-B	I954063			ISI	-	-	-	-	-	-	-	-
L2.30	#63		TENDON-ANCHORAGE HDWARE & SUR CONCRETE	AUG	-	-	-	-	-	-	-	-
CC	CONTAINMENT			OWN	-	-	-	-	-	-	-	-
				PRE	-	-	-	-	-	-	-	-
L-B	I954064			ISI	-	-	-	-	-	-	-	-
L2.30	#64		TENDON-ANCHORAGE HDWARE & SUR CONCRETE	AUG	-	-	-	-	-	-	-	-
CC	CONTAINMENT			OWN	-	-	-	-	-	-	-	-
				PRE	-	-	-	-	-	-	-	-
L-B	I954065			ISI	-	-	-	-	-	-	-	-
L2.30	#65		TENDON-ANCHORAGE HDWARE & SUR CONCRETE	AUG	-	-	-	-	-	-	-	-
CC	CONTAINMENT			OWN	-	-	-	-	-	-	-	-
				PRE	-	-	-	-	-	-	-	-
L-B	I954066	ISI/VT/VT-113		ISI	-	-	r	c	-	-	-	-
L2.30	#66		TENDON-ANCHORAGE HDWARE & SUR CONCRETE	AUG	-	-	-	-	-	-	-	-
CC	CONTAINMENT			OWN	-	-	-	-	-	-	-	-
				PRE	-	-	-	-	-	-	-	-
L-B	I954067			ISI	-	-	-	-	-	-	-	-
L2.30	#67		TENDON-ANCHORAGE HDWARE & SUR CONCRETE	AUG	-	-	-	-	-	-	-	-
CC	CONTAINMENT			OWN	-	-	-	-	-	-	-	-
				PRE	-	-	-	-	-	-	-	-
L-B	I954068			ISI	-	-	-	-	-	-	-	-
L2.30	#68		TENDON-ANCHORAGE HDWARE & SUR CONCRETE	AUG	-	-	-	-	-	-	-	-
CC	CONTAINMENT			OWN	-	-	-	-	-	-	-	-
				PRE	-	-	-	-	-	-	-	-
L-B	I954069			ISI	-	-	-	-	-	-	-	-
L2.30	#69		TENDON-ANCHORAGE HDWARE & SUR CONCRETE	AUG	-	-	-	-	-	-	-	-
CC	CONTAINMENT			OWN	-	-	-	-	-	-	-	-
				PRE	-	-	-	-	-	-	-	-
L-B	I954070			ISI	-	-	-	-	-	-	-	-
L2.30	#70		TENDON-ANCHORAGE HDWARE & SUR CONCRETE	AUG	-	-	-	-	-	-	-	-
CC	CONTAINMENT			OWN	-	-	-	-	-	-	-	-
				PRE	-	-	-	-	-	-	-	-

Category, ItemNO, Class	Summary / CompID / System	Scope / Method / Procedure	Iso No. Comp. Desc. Code Case		Period 1 97	Period 1 99	Period 1 00	Period 2 02	Period 2 03	Period 2 05	Period 3 06	Period 3 08
L-B	I954071	ISI/VT/VT-113		ISI	-	-	-	-	-	s	-	-
L2.30	#71		TENDON-ANCHORAGE HDWARE & SUR CONCRETE	AUG	-	-	-	-	-	-	-	-
CC	CONTAINMENT			OWN	-	-	-	-	-	-	-	-
				PRE	-	-	-	-	-	-	-	-
L-B	I954072	ISI/VT/VT-113		ISI	-	-	-	-	-	s	-	-
L2.30	#72		TENDON-ANCHORAGE HDWARE & SUR CONCRETE	AUG	-	-	-	-	-	-	-	-
CC	CONTAINMENT			OWN	-	-	-	-	-	-	-	-
				PRE	-	-	-	-	-	-	-	-
L-B	I954073	ISI/VT/VT-113		ISI	-	-	-	-	-	s	-	-
L2.30	#73		TENDON-ANCHORAGE HDWARE & SUR CONCRETE	AUG	-	-	-	-	-	-	-	-
CC	CONTAINMENT			OWN	-	-	-	-	-	-	-	-
				PRE	-	-	-	-	-	-	-	-
L-B	I954074			ISI	-	-	-	-	-	-	-	-
L2.30	#74		TENDON-ANCHORAGE HDWARE & SUR CONCRETE	AUG	-	-	-	-	-	-	-	-
CC	CONTAINMENT			OWN	-	-	-	-	-	-	-	-
				PRE	-	-	-	-	-	-	-	-
L-B	I954075			ISI	-	-	-	-	-	-	-	-
L2.30	#75		TENDON-ANCHORAGE HDWARE & SUR CONCRETE	AUG	-	-	-	-	-	-	-	-
CC	CONTAINMENT			OWN	-	-	-	-	-	-	-	-
				PRE	-	-	-	-	-	-	-	-
L-B	I954076			ISI	-	-	-	-	-	-	-	-
L2.30	#76		TENDON-ANCHORAGE HDWARE & SUR CONCRETE	AUG	-	-	-	-	-	-	-	-
CC	CONTAINMENT			OWN	-	-	-	-	-	-	-	-
				PRE	-	-	-	-	-	-	-	-
L-B	I954077	ISI/VT/VT-113		ISI	-	-	r	c	-	-	-	-
L2.30	#77		TENDON-ANCHORAGE HDWARE & SUR CONCRETE	AUG	-	-	-	-	-	-	-	-
CC	CONTAINMENT			OWN	-	-	-	-	-	-	-	-
				PRE	-	-	-	-	-	-	-	-
L-B	I954078			ISI	-	-	-	-	-	-	-	-
L2.30	#78		TENDON-ANCHORAGE HDWARE & SUR CONCRETE	AUG	-	-	-	-	-	-	-	-
CC	CONTAINMENT			OWN	-	-	-	-	-	-	-	-
				PRE	-	-	-	-	-	-	-	-
L-B	I954079			ISI	-	-	-	-	-	-	-	-
L2.30	#79		TENDON-ANCHORAGE HDWARE & SUR CONCRETE	AUG	-	-	-	-	-	-	-	-
CC	CONTAINMENT			OWN	-	-	-	-	-	-	-	-
				PRE	-	-	-	-	-	-	-	-
L-B	I954080			ISI	-	-	-	-	-	-	-	-
L2.30	#80		TENDON-ANCHORAGE HDWARE & SUR CONCRETE	AUG	-	-	-	-	-	-	-	-
CC	CONTAINMENT			OWN	-	-	-	-	-	-	-	-
				PRE	-	-	-	-	-	-	-	-

Category, ItemNO, Class	Summary / CompID / System	Scope / Method / Procedure	Iso No. Comp. Desc. Code Case		Period 1			Period 2			Period 3	
					97	99	00	02	03	05	06	08
L-B	I954081			ISI	-	-	-	-	-	-	-	-
L2.30	#81		TENDON-ANCHORAGE HDWARE & SUR CONCRETE	AUG	-	-	-	-	-	-	-	-
CC	CONTAINMENT			OWN	-	-	-	-	-	-	-	-
				PRE	-	-	-	-	-	-	-	-
L-B	I954082			ISI	-	-	-	-	-	-	-	-
L2.30	#82		TENDON-ANCHORAGE HDWARE & SUR CONCRETE	AUG	-	-	-	-	-	-	-	-
CC	CONTAINMENT			OWN	-	-	-	-	-	-	-	-
				PRE	-	-	-	-	-	-	-	-
L-B	I954083			ISI	-	-	-	-	-	-	-	-
L2.30	#83		TENDON-ANCHORAGE HDWARE & SUR CONCRETE	AUG	-	-	-	-	-	-	-	-
CC	CONTAINMENT			OWN	-	-	-	-	-	-	-	-
				PRE	-	-	-	-	-	-	-	-
L-B	I954084			ISI	-	-	-	-	-	-	-	-
L2.30	#84		TENDON-ANCHORAGE HDWARE & SUR CONCRETE	AUG	-	-	-	-	-	-	-	-
CC	CONTAINMENT			OWN	-	-	-	-	-	-	-	-
				PRE	-	-	-	-	-	-	-	-
L-B	I954085			ISI	-	-	-	-	-	-	-	-
L2.30	#85		TENDON-ANCHORAGE HDWARE & SUR CONCRETE	AUG	-	-	-	-	-	-	-	-
CC	CONTAINMENT			OWN	-	-	-	-	-	-	-	-
				PRE	-	-	-	-	-	-	-	-
L-B	I954086			ISI	-	-	-	-	-	-	-	-
L2.30	#86		TENDON-ANCHORAGE HDWARE & SUR CONCRETE	AUG	-	-	-	-	-	-	-	-
CC	CONTAINMENT			OWN	-	-	-	-	-	-	-	-
				PRE	-	-	-	-	-	-	-	-
L-B	I954087			ISI	-	-	-	-	-	-	-	-
L2.30	#87		TENDON-ANCHORAGE HDWARE & SUR CONCRETE	AUG	-	-	-	-	-	-	-	-
CC	CONTAINMENT			OWN	-	-	-	-	-	-	-	-
				PRE	-	-	-	-	-	-	-	-
L-B	I954088			ISI	-	-	-	-	-	-	-	-
L2.30	#88		TENDON-ANCHORAGE HDWARE & SUR CONCRETE	AUG	-	-	-	-	-	-	-	-
CC	CONTAINMENT			OWN	-	-	-	-	-	-	-	-
				PRE	-	-	-	-	-	-	-	-
L-B	I954089			ISI	-	-	-	-	-	-	-	-
L2.30	#89		TENDON-ANCHORAGE HDWARE & SUR CONCRETE	AUG	-	-	-	-	-	-	-	-
CC	CONTAINMENT			OWN	-	-	-	-	-	-	-	-
				PRE	-	-	-	-	-	-	-	-
L-B	I954090			ISI	-	-	-	-	-	-	-	-
L2.30	#90		TENDON-ANCHORAGE HDWARE & SUR CONCRETE	AUG	-	-	-	-	-	-	-	-
CC	CONTAINMENT			OWN	-	-	-	-	-	-	-	-
				PRE	-	-	-	-	-	-	-	-

Category, ItemNO, Class	Summary / CompID / System	Scope / Method / Procedure	Iso No. Comp. Desc. Code Case		Period 1 97	Period 1 99	Period 1 00	Period 2 02	Period 2 03	Period 2 05	Period 3 06	Period 3 08
L-B	I954091			ISI	-	-	-	-	-	-	-	-
L2.30	#91		TENDON-ANCHORAGE HDWARE & SUR CONCRETE	AUG	-	-	-	-	-	-	-	-
CC	CONTAINMENT			OWN	-	-	-	-	-	-	-	-
				PRE	-	-	-	-	-	-	-	-
L-B	I954092			ISI	-	-	-	-	-	-	-	-
L2.30	#92		TENDON-ANCHORAGE HDWARE & SUR CONCRETE	AUG	-	-	-	-	-	-	-	-
CC	CONTAINMENT			OWN	-	-	-	-	-	-	-	-
				PRE	-	-	-	-	-	-	-	-
L-B	I954093			ISI	-	-	-	-	-	-	-	-
L2.30	#93		TENDON-ANCHORAGE HDWARE & SUR CONCRETE	AUG	-	-	-	-	-	-	-	-
CC	CONTAINMENT			OWN	-	-	-	-	-	-	-	-
				PRE	-	-	-	-	-	-	-	-
L-B	I954094			ISI	-	-	-	-	-	-	-	-
L2.30	#94		TENDON-ANCHORAGE HDWARE & SUR CONCRETE	AUG	-	-	-	-	-	-	-	-
CC	CONTAINMENT			OWN	-	-	-	-	-	-	-	-
				PRE	-	-	-	-	-	-	-	-
L-B	I954095			ISI	-	-	-	-	-	-	-	-
L2.30	#95		TENDON-ANCHORAGE HDWARE & SUR CONCRETE	AUG	-	-	-	-	-	-	-	-
CC	CONTAINMENT			OWN	-	-	-	-	-	-	-	-
				PRE	-	-	-	-	-	-	-	-
L-B	I954096			ISI	-	-	-	-	-	-	-	-
L2.30	#96		TENDON-ANCHORAGE HDWARE & SUR CONCRETE	AUG	-	-	-	-	-	-	-	-
CC	CONTAINMENT			OWN	-	-	-	-	-	-	-	-
				PRE	-	-	-	-	-	-	-	-
L-B	I954097			ISI	-	-	-	-	-	-	-	-
L2.30	#97		TENDON-ANCHORAGE HDWARE & SUR CONCRETE	AUG	-	-	-	-	-	-	-	-
CC	CONTAINMENT			OWN	-	-	-	-	-	-	-	-
				PRE	-	-	-	-	-	-	-	-
L-B	I954098			ISI	-	-	-	-	-	-	-	-
L2.30	#98		TENDON-ANCHORAGE HDWARE & SUR CONCRETE	AUG	-	-	-	-	-	-	-	-
CC	CONTAINMENT			OWN	-	-	-	-	-	-	-	-
				PRE	-	-	-	-	-	-	-	-
L-B	I954099			ISI	-	-	-	-	-	-	-	-
L2.30	#99		TENDON-ANCHORAGE HDWARE & SUR CONCRETE	AUG	-	-	-	-	-	-	-	-
CC	CONTAINMENT			OWN	-	-	-	-	-	-	-	-
				PRE	-	-	-	-	-	-	-	-
L-B	I954100			ISI	-	-	-	-	-	-	-	-
L2.30	#100		TENDON-ANCHORAGE HDWARE & SUR CONCRETE	AUG	-	-	-	-	-	-	-	-
CC	CONTAINMENT			OWN	-	-	-	-	-	-	-	-
				PRE	-	-	-	-	-	-	-	-

Category, ItemNO, Class	Summary / CompID / System	Scope / Method / Procedure	Iso No. Comp. Desc. Code Case		Period 1 97	Period 1 99	Period 1 00	Period 2 02	Period 2 03	Period 2 05	Period 3 06	Period 3 08
L-B	I954101			ISI	-	-	-	-	-	-	-	-
L2.30	#101		TENDON-ANCHORAGE HDWARE & SUR CONCRETE	AUG	-	-	-	-	-	-	-	-
CC	CONTAINMENT			OWN	-	-	-	-	-	-	-	-
				PRE	-	-	-	-	-	-	-	-
L-B	I954102			ISI	-	-	-	-	-	-	-	-
L2.30	#102		TENDON-ANCHORAGE HDWARE & SUR CONCRETE	AUG	-	-	-	-	-	-	-	-
CC	CONTAINMENT			OWN	-	-	-	-	-	-	-	-
				PRE	-	-	-	-	-	-	-	-
L-B	I954103			ISI	-	-	-	-	-	-	-	-
L2.30	#103		TENDON-ANCHORAGE HDWARE & SUR CONCRETE	AUG	-	-	-	-	-	-	-	-
CC	CONTAINMENT			OWN	-	-	-	-	-	-	-	-
				PRE	-	-	-	-	-	-	-	-
L-B	I954104			ISI	-	-	-	-	-	-	-	-
L2.30	#104		TENDON-ANCHORAGE HDWARE & SUR CONCRETE	AUG	-	-	-	-	-	-	-	-
CC	CONTAINMENT			OWN	-	-	-	-	-	-	-	-
				PRE	-	-	-	-	-	-	-	-
L-B	I954105	ISI/VT/VT-113		ISI	-	-	r	c	-	-	-	-
L2.30	#105		TENDON-ANCHORAGE HDWARE & SUR CONCRETE	AUG	-	-	-	-	-	-	-	-
CC	CONTAINMENT			OWN	-	-	-	-	-	-	-	-
				PRE	-	-	-	-	-	-	-	-
L-B	I954106			ISI	-	-	-	-	-	-	-	-
L2.30	#106		TENDON-ANCHORAGE HDWARE & SUR CONCRETE	AUG	-	-	-	-	-	-	-	-
CC	CONTAINMENT			OWN	-	-	-	-	-	-	-	-
				PRE	-	-	-	-	-	-	-	-
L-B	I954107			ISI	-	-	-	-	-	-	-	-
L2.30	#107		TENDON-ANCHORAGE HDWARE & SUR CONCRETE	AUG	-	-	-	-	-	-	-	-
CC	CONTAINMENT			OWN	-	-	-	-	-	-	-	-
				PRE	-	-	-	-	-	-	-	-
L-B	I954108			ISI	-	-	-	-	-	-	-	-
L2.30	#108		TENDON-ANCHORAGE HDWARE & SUR CONCRETE	AUG	-	-	-	-	-	-	-	-
CC	CONTAINMENT			OWN	-	-	-	-	-	-	-	-
				PRE	-	-	-	-	-	-	-	-
L-B	I954109			ISI	-	-	-	-	-	-	-	-
L2.30	#109		TENDON-ANCHORAGE HDWARE & SUR CONCRETE	AUG	-	-	-	-	-	-	-	-
CC	CONTAINMENT			OWN	-	-	-	-	-	-	-	-
				PRE	-	-	-	-	-	-	-	-
L-B	I954110	ISI/VT/VT-113		ISI	-	-	r	c	-	-	-	-
L2.30	#110		TENDON-ANCHORAGE HDWARE & SUR CONCRETE	AUG	-	-	-	-	-	-	-	-
CC	CONTAINMENT			OWN	-	-	-	-	-	-	-	-
				PRE	-	-	-	-	-	-	-	-

Category, ItemNO, Class	Summary / CompID / System	Scope / Method / Procedure	Iso No. Comp. Desc. Code Case		Period 1 97	Period 1 99	Period 1 00	Period 2 02	Period 2 03	Period 2 05	Period 3 06	Period 3 08
L-B	I954111	ISI/VT/VT-113		ISI	-	-	-	-	-	s	-	-
L2.30	#111		TENDON-ANCHORAGE HDWARE & SUR CONCRETE	AUG	-	-	-	-	-	-	-	-
CC	CONTAINMENT			OWN	-	-	-	-	-	-	-	-
				PRE	-	-	-	-	-	-	-	-
L-B	I954112	ISI/VT/VT-113		ISI	-	-	r	c	-	b	-	-
L2.30	#112	ISI/VT/VT-113	TENDON-ANCHORAGE HDWARE & SUR CONCRETE	AUG	-	-	-	-	-	-	-	-
CC	CONTAINMENT			OWN	-	-	-	-	-	-	-	-
				PRE	-	-	-	-	-	-	-	-
L-B	I954113	ISI/VT/VT-113		ISI	-	-	-	-	-	s	-	-
L2.30	#113		TENDON-ANCHORAGE HDWARE & SUR CONCRETE	AUG	-	-	-	-	-	-	-	-
CC	CONTAINMENT			OWN	-	-	-	-	-	-	-	-
				PRE	-	-	-	-	-	-	-	-
L-B	I954114	ISI/VT/VT-113		ISI	-	-	-	-	-	s	-	-
L2.30	#114		TENDON-ANCHORAGE HDWARE & SUR CONCRETE	AUG	-	-	-	-	-	-	-	-
CC	CONTAINMENT			OWN	-	-	-	-	-	-	-	-
				PRE	-	-	-	-	-	-	-	-
L-B	I954115	ISI/VT/VT-113		ISI	-	-	-	-	-	s	-	-
L2.30	#115		TENDON-ANCHORAGE HDWARE & SUR CONCRETE	AUG	-	-	-	-	-	-	-	-
CC	CONTAINMENT			OWN	-	-	-	-	-	-	-	-
				PRE	-	-	-	-	-	-	-	-
L-B	I954116	ISI/VT/VT-113		ISI	-	-	-	-	-	s	-	-
L2.30	#116		TENDON-ANCHORAGE HDWARE & SUR CONCRETE	AUG	-	-	-	-	-	-	-	-
CC	CONTAINMENT			OWN	-	-	-	-	-	-	-	-
				PRE	-	-	-	-	-	-	-	-
L-B	I954117	ISI/VT/VT-113		ISI	-	-	-	-	-	s	-	-
L2.30	#117		TENDON-ANCHORAGE HDWARE & SUR CONCRETE	AUG	-	-	-	-	-	-	-	-
CC	CONTAINMENT			OWN	-	-	-	-	-	-	-	-
				PRE	-	-	-	-	-	-	-	-
L-B	I954118	ISI/VT/VT-113		ISI	-	-	-	-	-	s	-	-
L2.30	#118		TENDON-ANCHORAGE HDWARE & SUR CONCRETE	AUG	-	-	-	-	-	-	-	-
CC	CONTAINMENT			OWN	-	-	-	-	-	-	-	-
				PRE	-	-	-	-	-	-	-	-
L-B	I954119	ISI/VT/VT-113		ISI	-	-	-	-	-	s	-	-
L2.30	#119		TENDON-ANCHORAGE HDWARE & SUR CONCRETE	AUG	-	-	-	-	-	-	-	-
CC	CONTAINMENT			OWN	-	-	-	-	-	-	-	-
				PRE	-	-	-	-	-	-	-	-
L-B	I954120	ISI/VT/VT-113		ISI	-	-	-	-	-	s	-	-
L2.30	#120		TENDON-ANCHORAGE HDWARE & SUR CONCRETE	AUG	-	-	-	-	-	-	-	-
CC	CONTAINMENT			OWN	-	-	-	-	-	-	-	-
				PRE	-	-	-	-	-	-	-	-

Category, ItemNO, Class	Summary / CompID / System	Scope / Method / Procedure	Iso No. Comp. Desc. Code Case		Period 1 97	Period 1 99	Period 1 00	Period 2 02	Period 2 03	Period 2 05	Period 3 06	Period 3 08
L-B	I954121	ISI/VT/VT-113		ISI	-	-	-	-	-	s	-	-
L2.30	#121		TENDON-ANCHORAGE HDWARE & SUR CONCRETE	AUG	-	-	-	-	-	-	-	-
CC	CONTAINMENT			OWN	-	-	-	-	-	-	-	-
				PRE	-	-	-	-	-	-	-	-
L-B	I954122	ISI/VT/VT-113		ISI	-	-	r	c	-	b	-	-
L2.30	#122	ISI/VT/VT-113	TENDON-ANCHORAGE HDWARE & SUR CONCRETE	AUG	-	-	-	-	-	-	-	-
CC	CONTAINMENT			OWN	-	-	-	-	-	-	-	-
				PRE	-	-	-	-	-	-	-	-
L-B	I954123			ISI	-	-	-	-	-	-	-	-
L2.30	#123		TENDON-ANCHORAGE HDWARE & SUR CONCRETE	AUG	-	-	-	-	-	-	-	-
CC	CONTAINMENT			OWN	-	-	-	-	-	-	-	-
				PRE	-	-	-	-	-	-	-	-
L-B	I954124			ISI	-	-	-	-	-	-	-	-
L2.30	#124		TENDON-ANCHORAGE HDWARE & SUR CONCRETE	AUG	-	-	-	-	-	-	-	-
CC	CONTAINMENT			OWN	-	-	-	-	-	-	-	-
				PRE	-	-	-	-	-	-	-	-
L-B	I954125			ISI	-	-	-	-	-	-	-	-
L2.30	#125		TENDON-ANCHORAGE HDWARE & SUR CONCRETE	AUG	-	-	-	-	-	-	-	-
CC	CONTAINMENT			OWN	-	-	-	-	-	-	-	-
				PRE	-	-	-	-	-	-	-	-
L-B	I954126	ISI/VT/VT-113		ISI	-	-	-	-	-	s	-	-
L2.30	#126		TENDON-ANCHORAGE HDWARE & SUR CONCRETE	AUG	-	-	-	-	-	-	-	-
CC	CONTAINMENT			OWN	-	-	-	-	-	-	-	-
				PRE	-	-	-	-	-	-	-	-
L-B	I954127			ISI	-	-	-	-	-	-	-	-
L2.30	#127		TENDON-ANCHORAGE HDWARE & SUR CONCRETE	AUG	-	-	-	-	-	-	-	-
CC	CONTAINMENT			OWN	-	-	-	-	-	-	-	-
				PRE	-	-	-	-	-	-	-	-
L-B	I954128	ISI/VT/VT-113		ISI	-	-	r	c	-	-	-	-
L2.30	#128		TENDON-ANCHORAGE HDWARE & SUR CONCRETE	AUG	-	-	-	-	-	-	-	-
CC	CONTAINMENT			OWN	-	-	-	-	-	-	-	-
				PRE	-	-	-	-	-	-	-	-
L-B	I954129	ISI/VT/VT-113		ISI	-	-	r	c	-	-	-	-
L2.30	#129		TENDON-ANCHORAGE HDWARE & SUR CONCRETE	AUG	-	-	-	-	-	-	-	-
CC	CONTAINMENT			OWN	-	-	-	-	-	-	-	-
				PRE	-	-	-	-	-	-	-	-
L-B	I954130			ISI	-	-	-	-	-	-	-	-
L2.30	#130		TENDON-ANCHORAGE HDWARE & SUR CONCRETE	AUG	-	-	-	-	-	-	-	-
CC	CONTAINMENT			OWN	-	-	-	-	-	-	-	-
				PRE	-	-	-	-	-	-	-	-

Category, ItemNO, Class	Summary / CompID / System	Scope / Method / Procedure	Iso No. Comp. Desc. Code Case		Period 1 97	Period 1 99	Period 1 00	Period 2 02	Period 2 03	Period 2 05	Period 3 06	Period 3 08
L-B	I954131			ISI	-	-	-	-	-	-	-	-
L2.30	#131		TENDON-ANCHORAGE HDWARE & SUR CONCRETE	AUG	-	-	-	-	-	-	-	-
CC	CONTAINMENT			OWN	-	-	-	-	-	-	-	-
				PRE	-	-	-	-	-	-	-	-
L-B	I954132	ISI/VT/VT-113		ISI	-	-	-	-	-	s	-	-
L2.30	#132		TENDON-ANCHORAGE HDWARE & SUR CONCRETE	AUG	-	-	-	-	-	-	-	-
CC	CONTAINMENT			OWN	-	-	-	-	-	-	-	-
				PRE	-	-	-	-	-	-	-	-
L-B	I954133			ISI	-	-	-	-	-	-	-	-
L2.30	#133		TENDON-ANCHORAGE HDWARE & SUR CONCRETE	AUG	-	-	-	-	-	-	-	-
CC	CONTAINMENT			OWN	-	-	-	-	-	-	-	-
				PRE	-	-	-	-	-	-	-	-
L-B	I954134			ISI	-	-	-	-	-	-	-	-
L2.30	#134		TENDON-ANCHORAGE HDWARE & SUR CONCRETE	AUG	-	-	-	-	-	-	-	-
CC	CONTAINMENT			OWN	-	-	-	-	-	-	-	-
				PRE	-	-	-	-	-	-	-	-
L-B	I954135			ISI	-	-	-	-	-	-	-	-
L2.30	#135		TENDON-ANCHORAGE HDWARE & SUR CONCRETE	AUG	-	-	-	-	-	-	-	-
CC	CONTAINMENT			OWN	-	-	-	-	-	-	-	-
				PRE	-	-	-	-	-	-	-	-
L-B	I954136			ISI	-	-	-	-	-	-	-	-
L2.30	#136		TENDON-ANCHORAGE HDWARE & SUR CONCRETE	AUG	-	-	-	-	-	-	-	-
CC	CONTAINMENT			OWN	-	-	-	-	-	-	-	-
				PRE	-	-	-	-	-	-	-	-
L-B	I954137			ISI	-	-	-	-	-	-	-	-
L2.30	#137		TENDON-ANCHORAGE HDWARE & SUR CONCRETE	AUG	-	-	-	-	-	-	-	-
CC	CONTAINMENT			OWN	-	-	-	-	-	-	-	-
				PRE	-	-	-	-	-	-	-	-
L-B	I954138			ISI	-	-	-	-	-	-	-	-
L2.30	#138		TENDON-ANCHORAGE HDWARE & SUR CONCRETE	AUG	-	-	-	-	-	-	-	-
CC	CONTAINMENT			OWN	-	-	-	-	-	-	-	-
				PRE	-	-	-	-	-	-	-	-
L-B	I954139			ISI	-	-	-	-	-	-	-	-
L2.30	#139		TENDON-ANCHORAGE HDWARE & SUR CONCRETE	AUG	-	-	-	-	-	-	-	-
CC	CONTAINMENT			OWN	-	-	-	-	-	-	-	-
				PRE	-	-	-	-	-	-	-	-
L-B	I954140			ISI	-	-	-	-	-	-	-	-
L2.30	#140		TENDON-ANCHORAGE HDWARE & SUR CONCRETE	AUG	-	-	-	-	-	-	-	-
CC	CONTAINMENT			OWN	-	-	-	-	-	-	-	-
				PRE	-	-	-	-	-	-	-	-

Category, ItemNO, Class	Summary / CompID / System	Scope / Method / Procedure	Iso No. Comp. Desc. Code Case		Period 1 97	Period 1 99	Period 1 00	Period 2 02	Period 2 03	Period 2 05	Period 3 06	Period 3 08
L-B	I954141			ISI	-	-	-	-	-	-	-	-
L2.30	#141		TENDON-ANCHORAGE HDWARE & SUR CONCRETE	AUG	-	-	-	-	-	-	-	-
CC	CONTAINMENT			OWN	-	-	-	-	-	-	-	-
				PRE	-	-	-	-	-	-	-	-
L-B	I954142			ISI	-	-	-	-	-	-	-	-
L2.30	#142		TENDON-ANCHORAGE HDWARE & SUR CONCRETE	AUG	-	-	-	-	-	-	-	-
CC	CONTAINMENT			OWN	-	-	-	-	-	-	-	-
				PRE	-	-	-	-	-	-	-	-
L-B	I954143			ISI	-	-	-	-	-	-	-	-
L2.30	#143		TENDON-ANCHORAGE HDWARE & SUR CONCRETE	AUG	-	-	-	-	-	-	-	-
CC	CONTAINMENT			OWN	-	-	-	-	-	-	-	-
				PRE	-	-	-	-	-	-	-	-
L-B	I954144			ISI	-	-	-	-	-	-	-	-
L2.30	#144		TENDON-ANCHORAGE HDWARE & SUR CONCRETE	AUG	-	-	-	-	-	-	-	-
CC	CONTAINMENT			OWN	-	-	-	-	-	-	-	-
				PRE	-	-	-	-	-	-	-	-
L-B	I954145	ISI/VT/VT-113		ISI	-	-	-	-	-	s	-	-
L2.30	#145		TENDON-ANCHORAGE HDWARE & SUR CONCRETE	AUG	-	-	-	-	-	-	-	-
CC	CONTAINMENT			OWN	-	-	-	-	-	-	-	-
				PRE	-	-	-	-	-	-	-	-
L-B	I954146			ISI	-	-	-	-	-	-	-	-
L2.30	#146		TENDON-ANCHORAGE HDWARE & SUR CONCRETE	AUG	-	-	-	-	-	-	-	-
CC	CONTAINMENT			OWN	-	-	-	-	-	-	-	-
				PRE	-	-	-	-	-	-	-	-
L-B	I954147			ISI	-	-	-	-	-	-	-	-
L2.30	#147		TENDON-ANCHORAGE HDWARE & SUR CONCRETE	AUG	-	-	-	-	-	-	-	-
CC	CONTAINMENT			OWN	-	-	-	-	-	-	-	-
				PRE	-	-	-	-	-	-	-	-
L-B	I954148			ISI	-	-	-	-	-	-	-	-
L2.30	#148		TENDON-ANCHORAGE HDWARE & SUR CONCRETE	AUG	-	-	-	-	-	-	-	-
CC	CONTAINMENT			OWN	-	-	-	-	-	-	-	-
				PRE	-	-	-	-	-	-	-	-
L-B	I954149			ISI	-	-	-	-	-	-	-	-
L2.30	#149		TENDON-ANCHORAGE HDWARE & SUR CONCRETE	AUG	-	-	-	-	-	-	-	-
CC	CONTAINMENT			OWN	-	-	-	-	-	-	-	-
				PRE	-	-	-	-	-	-	-	-
L-B	I954150			ISI	-	-	-	-	-	-	-	-
L2.30	#150		TENDON-ANCHORAGE HDWARE & SUR CONCRETE	AUG	-	-	-	-	-	-	-	-
CC	CONTAINMENT			OWN	-	-	-	-	-	-	-	-
				PRE	-	-	-	-	-	-	-	-

Category, ItemNO, Class	Summary / CompID / System	Scope / Method / Procedure	Iso No. Comp. Desc. Code Case		Period 1 97	Period 1 99	Period 1 00	Period 2 02	Period 2 03	Period 2 05	Period 3 06	Period 3 08
L-B	I954151			ISI	-	-	-	-	-	-	-	-
L2.30	#151		TENDON-ANCHORAGE HDWARE & SUR CONCRETE	AUG	-	-	-	-	-	-	-	-
CC	CONTAINMENT			OWN	-	-	-	-	-	-	-	-
				PRE	-	-	-	-	-	-	-	-
L-B	I954152	ISI/VT/VT-113		ISI	-	-	-	-	-	s	-	-
L2.30	#152		TENDON-ANCHORAGE HDWARE & SUR CONCRETE	AUG	-	-	-	-	-	-	-	-
CC	CONTAINMENT			OWN	-	-	-	-	-	-	-	-
				PRE	-	-	-	-	-	-	-	-
L-B	I954153			ISI	-	-	-	-	-	-	-	-
L2.30	#153		TENDON-ANCHORAGE HDWARE & SUR CONCRETE	AUG	-	-	-	-	-	-	-	-
CC	CONTAINMENT			OWN	-	-	-	-	-	-	-	-
				PRE	-	-	-	-	-	-	-	-
L-B	I954154			ISI	-	-	-	-	-	-	-	-
L2.30	#154		TENDON-ANCHORAGE HDWARE & SUR CONCRETE	AUG	-	-	-	-	-	-	-	-
CC	CONTAINMENT			OWN	-	-	-	-	-	-	-	-
				PRE	-	-	-	-	-	-	-	-
L-B	I954155			ISI	-	-	-	-	-	-	-	-
L2.30	#155		TENDON-ANCHORAGE HDWARE & SUR CONCRETE	AUG	-	-	-	-	-	-	-	-
CC	CONTAINMENT			OWN	-	-	-	-	-	-	-	-
				PRE	-	-	-	-	-	-	-	-
L-B	I954156			ISI	-	-	-	-	-	-	-	-
L2.30	#156		TENDON-ANCHORAGE HDWARE & SUR CONCRETE	AUG	-	-	-	-	-	-	-	-
CC	CONTAINMENT			OWN	-	-	-	-	-	-	-	-
				PRE	-	-	-	-	-	-	-	-
L-B	I954157			ISI	-	-	-	-	-	-	-	-
L2.30	#157		TENDON-ANCHORAGE HDWARE & SUR CONCRETE	AUG	-	-	-	-	-	-	-	-
CC	CONTAINMENT			OWN	-	-	-	-	-	-	-	-
				PRE	-	-	-	-	-	-	-	-
L-B	I954158			ISI	-	-	-	-	-	-	-	-
L2.30	#158		TENDON-ANCHORAGE HDWARE & SUR CONCRETE	AUG	-	-	-	-	-	-	-	-
CC	CONTAINMENT			OWN	-	-	-	-	-	-	-	-
				PRE	-	-	-	-	-	-	-	-
L-B	I954159	ISI/VT/VT-113		ISI	-	-	-	-	-	s	-	-
L2.30	#159		TENDON-ANCHORAGE HDWARE & SUR CONCRETE	AUG	-	-	-	-	-	-	-	-
CC	CONTAINMENT			OWN	-	-	-	-	-	-	-	-
				PRE	-	-	-	-	-	-	-	-
L-B	I954160	ISI/VT/VT-113		ISI	-	-	r	c	-	-	-	-
L2.30	#160		TENDON-ANCHORAGE HDWARE & SUR CONCRETE	AUG	-	-	-	-	-	-	-	-
CC	CONTAINMENT			OWN	-	-	-	-	-	-	-	-
				PRE	-	-	-	-	-	-	-	-

Category, ItemNO, Class	Summary / CompID / System	Scope / Method / Procedure	Iso No. Comp. Desc. Code Case		Period 1 97	Period 1 99	Period 1 00	Period 2 02	Period 2 03	Period 2 05	Period 3 06	Period 3 08
L-B	I955001			ISI	-	-	-	-	-	-	-	-
L2.40	#1		TENDON CORROSION PROTECTION MEDIUM	AUG	-	-	-	-	-	-	-	-
CC	CONTAINMENT			OWN	-	-	-	-	-	-	-	-
				PRE	-	-	-	-	-	-	-	-
L-B	I955002	ISI/VT/FT		ISI	-	-	r	c	-	-	-	-
L2.40	#2		TENDON CORROSION PROTECTION MEDIUM	AUG	-	-	-	-	-	-	-	-
CC	CONTAINMENT			OWN	-	-	-	-	-	-	-	-
				PRE	-	-	-	-	-	-	-	-
L-B	I955003			ISI	-	-	-	-	-	-	-	-
L2.40	#3		TENDON CORROSION PROTECTION MEDIUM	AUG	-	-	-	-	-	-	-	-
CC	CONTAINMENT			OWN	-	-	-	-	-	-	-	-
				PRE	-	-	-	-	-	-	-	-
L-B	I955004	ISI/VT/FT		ISI	-	-	r	c	-	-	-	-
L2.40	#4		TENDON CORROSION PROTECTION MEDIUM	AUG	-	-	-	-	-	-	-	-
CC	CONTAINMENT			OWN	-	-	-	-	-	-	-	-
				PRE	-	-	-	-	-	-	-	-
L-B	I955005	ISI/VT/FT		ISI	-	-	-	-	-	s	-	-
L2.40	#5		TENDON CORROSION PROTECTION MEDIUM	AUG	-	-	-	-	-	-	-	-
CC	CONTAINMENT			OWN	-	-	-	-	-	-	-	-
				PRE	-	-	-	-	-	-	-	-
L-B	I955006			ISI	-	-	-	-	-	-	-	-
L2.40	#6		TENDON CORROSION PROTECTION MEDIUM	AUG	-	-	-	-	-	-	-	-
CC	CONTAINMENT			OWN	-	-	-	-	-	-	-	-
				PRE	-	-	-	-	-	-	-	-
L-B	I955007			ISI	-	-	-	-	-	-	-	-
L2.40	#7		TENDON CORROSION PROTECTION MEDIUM	AUG	-	-	-	-	-	-	-	-
CC	CONTAINMENT			OWN	-	-	-	-	-	-	-	-
				PRE	-	-	-	-	-	-	-	-
L-B	I955008			ISI	-	-	-	-	-	-	-	-
L2.40	#8		TENDON CORROSION PROTECTION MEDIUM	AUG	-	-	-	-	-	-	-	-
CC	CONTAINMENT			OWN	-	-	-	-	-	-	-	-
				PRE	-	-	-	-	-	-	-	-
L-B	I955009	ISI/VT/FT		ISI	-	-	r	c	-	-	-	-
L2.40	#9		TENDON CORROSION PROTECTION MEDIUM	AUG	-	-	-	-	-	-	-	-
CC	CONTAINMENT			OWN	-	-	-	-	-	-	-	-
				PRE	-	-	-	-	-	-	-	-
L-B	I955010	ISI/VT/FT		ISI	-	-	r	c	-	-	-	-
L2.40	#10		TENDON CORROSION PROTECTION MEDIUM	AUG	-	-	-	-	-	-	-	-
CC	CONTAINMENT			OWN	-	-	-	-	-	-	-	-
				PRE	-	-	-	-	-	-	-	-

Category, ItemNO, Class	Summary / CompID / System	Scope / Method / Procedure	Iso No. Comp. Desc. Code Case		Period 1 97	Period 1 99	Period 1 00	Period 2 02	Period 2 03	Period 2 05	Period 3 06	Period 3 08
L-B	I955011			ISI	-	-	-	-	-	-	-	-
L2.40	#11		TENDON CORROSION PROTECTION MEDIUM	AUG	-	-	-	-	-	-	-	-
CC	CONTAINMENT			OWN	-	-	-	-	-	-	-	-
				PRE	-	-	-	-	-	-	-	-
L-B	I955012			ISI	-	-	-	-	-	-	-	-
L2.40	#12		TENDON CORROSION PROTECTION MEDIUM	AUG	-	-	-	-	-	-	-	-
CC	CONTAINMENT			OWN	-	-	-	-	-	-	-	-
				PRE	-	-	-	-	-	-	-	-
L-B	I955013			ISI	-	-	-	-	-	-	-	-
L2.40	#13		TENDON CORROSION PROTECTION MEDIUM	AUG	-	-	-	-	-	-	-	-
CC	CONTAINMENT			OWN	-	-	-	-	-	-	-	-
				PRE	-	-	-	-	-	-	-	-
L-B	I955014	ISI/VT/FT		ISI	-	-	-	-	-	s	-	-
L2.40	#14		TENDON CORROSION PROTECTION MEDIUM	AUG	-	-	-	-	-	-	-	-
CC	CONTAINMENT			OWN	-	-	-	-	-	-	-	-
				PRE	-	-	-	-	-	-	-	-
L-B	I955015			ISI	-	-	-	-	-	-	-	-
L2.40	#15		TENDON CORROSION PROTECTION MEDIUM	AUG	-	-	-	-	-	-	-	-
CC	CONTAINMENT			OWN	-	-	-	-	-	-	-	-
				PRE	-	-	-	-	-	-	-	-
L-B	I955016	ISI/VT/FT		ISI	-	-	-	-	-	s	-	-
L2.40	#16		TENDON CORROSION PROTECTION MEDIUM	AUG	-	-	-	-	-	-	-	-
CC	CONTAINMENT			OWN	-	-	-	-	-	-	-	-
				PRE	-	-	-	-	-	-	-	-
L-B	I955017			ISI	-	-	-	-	-	-	-	-
L2.40	#17		TENDON CORROSION PROTECTION MEDIUM	AUG	-	-	-	-	-	-	-	-
CC	CONTAINMENT			OWN	-	-	-	-	-	-	-	-
				PRE	-	-	-	-	-	-	-	-
L-B	I955018			ISI	-	-	-	-	-	-	-	-
L2.40	#18		TENDON CORROSION PROTECTION MEDIUM	AUG	-	-	-	-	-	-	-	-
CC	CONTAINMENT			OWN	-	-	-	-	-	-	-	-
				PRE	-	-	-	-	-	-	-	-
L-B	I955019			ISI	-	-	-	-	-	-	-	-
L2.40	#19		TENDON CORROSION PROTECTION MEDIUM	AUG	-	-	-	-	-	-	-	-
CC	CONTAINMENT			OWN	-	-	-	-	-	-	-	-
				PRE	-	-	-	-	-	-	-	-
L-B	I955020			ISI	-	-	-	-	-	-	-	-
L2.40	#20		TENDON CORROSION PROTECTION MEDIUM	AUG	-	-	-	-	-	-	-	-
CC	CONTAINMENT			OWN	-	-	-	-	-	-	-	-
				PRE	-	-	-	-	-	-	-	-

Category, ItemNO, Class	Summary / CompID / System	Scope / Method / Procedure	Iso No. Comp. Desc. Code Case		Period 1 97	Period 1 99	Period 1 00	Period 2 02	Period 2 03	Period 2 05	Period 3 06	Period 3 08
L-B	I955021			ISI	-	-	-	-	-	-	-	-
L2.40	#21		TENDON CORROSION PROTECTION MEDIUM	AUG	-	-	-	-	-	-	-	-
CC	CONTAINMENT			OWN	-	-	-	-	-	-	-	-
				PRE	-	-	-	-	-	-	-	-
L-B	I955022			ISI	-	-	-	-	-	-	-	-
L2.40	#22		TENDON CORROSION PROTECTION MEDIUM	AUG	-	-	-	-	-	-	-	-
CC	CONTAINMENT			OWN	-	-	-	-	-	-	-	-
				PRE	-	-	-	-	-	-	-	-
L-B	I955023			ISI	-	-	-	-	-	-	-	-
L2.40	#23		TENDON CORROSION PROTECTION MEDIUM	AUG	-	-	-	-	-	-	-	-
CC	CONTAINMENT			OWN	-	-	-	-	-	-	-	-
				PRE	-	-	-	-	-	-	-	-
L-B	I955024			ISI	-	-	-	-	-	-	-	-
L2.40	#24		TENDON CORROSION PROTECTION MEDIUM	AUG	-	-	-	-	-	-	-	-
CC	CONTAINMENT			OWN	-	-	-	-	-	-	-	-
				PRE	-	-	-	-	-	-	-	-
L-B	I955025			ISI	-	-	-	-	-	-	-	-
L2.40	#25		TENDON CORROSION PROTECTION MEDIUM	AUG	-	-	-	-	-	-	-	-
CC	CONTAINMENT			OWN	-	-	-	-	-	-	-	-
				PRE	-	-	-	-	-	-	-	-
L-B	I955026			ISI	-	-	-	-	-	-	-	-
L2.40	#26		TENDON CORROSION PROTECTION MEDIUM	AUG	-	-	-	-	-	-	-	-
CC	CONTAINMENT			OWN	-	-	-	-	-	-	-	-
				PRE	-	-	-	-	-	-	-	-
L-B	I955027			ISI	-	-	-	-	-	-	-	-
L2.40	#27		TENDON CORROSION PROTECTION MEDIUM	AUG	-	-	-	-	-	-	-	-
CC	CONTAINMENT			OWN	-	-	-	-	-	-	-	-
				PRE	-	-	-	-	-	-	-	-
L-B	I955028			ISI	-	-	-	-	-	-	-	-
L2.40	#28		TENDON CORROSION PROTECTION MEDIUM	AUG	-	-	-	-	-	-	-	-
CC	CONTAINMENT			OWN	-	-	-	-	-	-	-	-
				PRE	-	-	-	-	-	-	-	-
L-B	I955029			ISI	-	-	-	-	-	-	-	-
L2.40	#29		TENDON CORROSION PROTECTION MEDIUM	AUG	-	-	-	-	-	-	-	-
CC	CONTAINMENT			OWN	-	-	-	-	-	-	-	-
				PRE	-	-	-	-	-	-	-	-
L-B	I955030	ISI/VT/FT		ISI	-	-	-	-	-	s	-	-
L2.40	#30		TENDON CORROSION PROTECTION MEDIUM	AUG	-	-	-	-	-	-	-	-
CC	CONTAINMENT			OWN	-	-	-	-	-	-	-	-
				PRE	-	-	-	-	-	-	-	-

Category, ItemNO, Class	Summary / CompID / System	Scope / Method / Procedure	Iso No. Comp. Desc. Code Case		Period 1 97	Period 1 99	Period 1 00	Period 2 02	Period 2 03	Period 2 05	Period 3 06	Period 3 08
L-B	I955031			ISI	-	-	-	-	-	-	-	-
L2.40	#31		TENDON CORROSION PROTECTION MEDIUM	AUG	-	-	-	-	-	-	-	-
CC	CONTAINMENT			OWN	-	-	-	-	-	-	-	-
				PRE	-	-	-	-	-	-	-	-
L-B	I955032	ISI/VT/FT		ISI	-	-	-	-	-	s	-	-
L2.40	#32		TENDON CORROSION PROTECTION MEDIUM	AUG	-	-	-	-	-	-	-	-
CC	CONTAINMENT			OWN	-	-	-	-	-	-	-	-
				PRE	-	-	-	-	-	-	-	-
L-B	I955033	ISI/VT/FT		ISI	-	-	-	-	-	s	-	-
L2.40	#33		TENDON CORROSION PROTECTION MEDIUM	AUG	-	-	-	-	-	-	-	-
CC	CONTAINMENT			OWN	-	-	-	-	-	-	-	-
				PRE	-	-	-	-	-	-	-	-
L-B	I955034	ISI/VT/FT		ISI	-	-	-	-	-	s	-	-
L2.40	#34		TENDON CORROSION PROTECTION MEDIUM	AUG	-	-	-	-	-	-	-	-
CC	CONTAINMENT			OWN	-	-	-	-	-	-	-	-
				PRE	-	-	-	-	-	-	-	-
L-B	I955035	ISI/VT/FT		ISI	-	-	-	-	-	s	-	-
L2.40	#35		TENDON CORROSION PROTECTION MEDIUM	AUG	-	-	-	-	-	-	-	-
CC	CONTAINMENT			OWN	-	-	-	-	-	-	-	-
				PRE	-	-	-	-	-	-	-	-
L-B	I955036	ISI/VT/FT		ISI	-	-	-	-	-	s	-	-
L2.40	#36		TENDON CORROSION PROTECTION MEDIUM	AUG	-	-	-	-	-	-	-	-
CC	CONTAINMENT			OWN	-	-	-	-	-	-	-	-
				PRE	-	-	-	-	-	-	-	-
L-B	I955037	ISI/VT/FT		ISI	-	-	-	-	-	s	-	-
L2.40	#37		TENDON CORROSION PROTECTION MEDIUM	AUG	-	-	-	-	-	-	-	-
CC	CONTAINMENT			OWN	-	-	-	-	-	-	-	-
				PRE	-	-	-	-	-	-	-	-
L-B	I955038	ISI/VT/FT		ISI	-	-	-	-	-	s	-	-
L2.40	#38		TENDON CORROSION PROTECTION MEDIUM	AUG	-	-	-	-	-	-	-	-
CC	CONTAINMENT			OWN	-	-	-	-	-	-	-	-
				PRE	-	-	-	-	-	-	-	-
L-B	I955039	ISI/VT/FT		ISI	-	-	-	-	-	s	-	-
L2.40	#39		TENDON CORROSION PROTECTION MEDIUM	AUG	-	-	-	-	-	-	-	-
CC	CONTAINMENT			OWN	-	-	-	-	-	-	-	-
				PRE	-	-	-	-	-	-	-	-
L-B	I955040			ISI	-	-	-	-	-	-	-	-
L2.40	#40		TENDON CORROSION PROTECTION MEDIUM	AUG	-	-	-	-	-	-	-	-
CC	CONTAINMENT			OWN	-	-	-	-	-	-	-	-
				PRE	-	-	-	-	-	-	-	-

Category, ItemNO, Class	Summary / CompID / System	Scope / Method / Procedure	Iso No. Comp. Desc. Code Case		Period 1			Period 2			Period 3	
					97	99	00	02	03	05	06	08
L-B	I955041			ISI	-	-	-	-	-	-	-	-
L2.40	#41		TENDON CORROSION PROTECTION MEDIUM	AUG	-	-	-	-	-	-	-	-
CC	CONTAINMENT			OWN	-	-	-	-	-	-	-	-
				PRE	-	-	-	-	-	-	-	-
L-B	I955042			ISI	-	-	-	-	-	-	-	-
L2.40	#42		TENDON CORROSION PROTECTION MEDIUM	AUG	-	-	-	-	-	-	-	-
CC	CONTAINMENT			OWN	-	-	-	-	-	-	-	-
				PRE	-	-	-	-	-	-	-	-
L-B	I955043			ISI	-	-	-	-	-	-	-	-
L2.40	#43		TENDON CORROSION PROTECTION MEDIUM	AUG	-	-	-	-	-	-	-	-
CC	CONTAINMENT			OWN	-	-	-	-	-	-	-	-
				PRE	-	-	-	-	-	-	-	-
L-B	I955044			ISI	-	-	-	-	-	-	-	-
L2.40	#44		TENDON CORROSION PROTECTION MEDIUM	AUG	-	-	-	-	-	-	-	-
CC	CONTAINMENT			OWN	-	-	-	-	-	-	-	-
				PRE	-	-	-	-	-	-	-	-
L-B	I955045			ISI	-	-	-	-	-	-	-	-
L2.40	#45		TENDON CORROSION PROTECTION MEDIUM	AUG	-	-	-	-	-	-	-	-
CC	CONTAINMENT			OWN	-	-	-	-	-	-	-	-
				PRE	-	-	-	-	-	-	-	-
L-B	I955046			ISI	-	-	-	-	-	-	-	-
L2.40	#46		TENDON CORROSION PROTECTION MEDIUM	AUG	-	-	-	-	-	-	-	-
CC	CONTAINMENT			OWN	-	-	-	-	-	-	-	-
				PRE	-	-	-	-	-	-	-	-
L-B	I955047			ISI	-	-	-	-	-	-	-	-
L2.40	#47		TENDON CORROSION PROTECTION MEDIUM	AUG	-	-	-	-	-	-	-	-
CC	CONTAINMENT			OWN	-	-	-	-	-	-	-	-
				PRE	-	-	-	-	-	-	-	-
L-B	I955048			ISI	-	-	-	-	-	-	-	-
L2.40	#48		TENDON CORROSION PROTECTION MEDIUM	AUG	-	-	-	-	-	-	-	-
CC	CONTAINMENT			OWN	-	-	-	-	-	-	-	-
				PRE	-	-	-	-	-	-	-	-
L-B	I955049			ISI	-	-	-	-	-	-	-	-
L2.40	#49		TENDON CORROSION PROTECTION MEDIUM	AUG	-	-	-	-	-	-	-	-
CC	CONTAINMENT			OWN	-	-	-	-	-	-	-	-
				PRE	-	-	-	-	-	-	-	-
L-B	I955050			ISI	-	-	-	-	-	-	-	-
L2.40	#50		TENDON CORROSION PROTECTION MEDIUM	AUG	-	-	-	-	-	-	-	-
CC	CONTAINMENT			OWN	-	-	-	-	-	-	-	-
				PRE	-	-	-	-	-	-	-	-

Category, ItemNO, Class	Summary / CompID / System	Scope / Method / Procedure	Iso No. Comp. Desc. Code Case		Period 1 97	Period 1 99	Period 1 00	Period 2 02	Period 2 03	Period 2 05	Period 3 06	Period 3 08
L-B	I955051			ISI	-	-	-	-	-	-	-	-
L2.40	#51		TENDON CORROSION PROTECTION MEDIUM	AUG	-	-	-	-	-	-	-	-
CC	CONTAINMENT			OWN	-	-	-	-	-	-	-	-
				PRE	-	-	-	-	-	-	-	-
L-B	I955052			ISI	-	-	-	-	-	-	-	-
L2.40	#52		TENDON CORROSION PROTECTION MEDIUM	AUG	-	-	-	-	-	-	-	-
CC	CONTAINMENT			OWN	-	-	-	-	-	-	-	-
				PRE	-	-	-	-	-	-	-	-
L-B	I955053			ISI	-	-	-	-	-	-	-	-
L2.40	#53		TENDON CORROSION PROTECTION MEDIUM	AUG	-	-	-	-	-	-	-	-
CC	CONTAINMENT			OWN	-	-	-	-	-	-	-	-
				PRE	-	-	-	-	-	-	-	-
L-B	I955054			ISI	-	-	-	-	-	-	-	-
L2.40	#54		TENDON CORROSION PROTECTION MEDIUM	AUG	-	-	-	-	-	-	-	-
CC	CONTAINMENT			OWN	-	-	-	-	-	-	-	-
				PRE	-	-	-	-	-	-	-	-
L-B	I955055			ISI	-	-	-	-	-	-	-	-
L2.40	#55		TENDON CORROSION PROTECTION MEDIUM	AUG	-	-	-	-	-	-	-	-
CC	CONTAINMENT			OWN	-	-	-	-	-	-	-	-
				PRE	-	-	-	-	-	-	-	-
L-B	I955056	ISI/VT/FT		ISI	-	-	-	-	-	s	-	-
L2.40	#56		TENDON CORROSION PROTECTION MEDIUM	AUG	-	-	-	-	-	-	-	-
CC	CONTAINMENT			OWN	-	-	-	-	-	-	-	-
				PRE	-	-	-	-	-	-	-	-
L-B	I955057	ISI/VT/FT		ISI	-	-	r	c	-	-	-	-
L2.40	#57		TENDON CORROSION PROTECTION MEDIUM	AUG	-	-	-	-	-	-	-	-
CC	CONTAINMENT			OWN	-	-	-	-	-	-	-	-
				PRE	-	-	-	-	-	-	-	-
L-B	I955058	ISI/VT/FT		ISI	-	-	-	-	-	s	-	-
L2.40	#58		TENDON CORROSION PROTECTION MEDIUM	AUG	-	-	-	-	-	-	-	-
CC	CONTAINMENT			OWN	-	-	-	-	-	-	-	-
				PRE	-	-	-	-	-	-	-	-
L-B	I955059			ISI	-	-	-	-	-	-	-	-
L2.40	#59		TENDON CORROSION PROTECTION MEDIUM	AUG	-	-	-	-	-	-	-	-
CC	CONTAINMENT			OWN	-	-	-	-	-	-	-	-
				PRE	-	-	-	-	-	-	-	-
L-B	I955060			ISI	-	-	-	-	-	-	-	-
L2.40	#60		TENDON CORROSION PROTECTION MEDIUM	AUG	-	-	-	-	-	-	-	-
CC	CONTAINMENT			OWN	-	-	-	-	-	-	-	-
				PRE	-	-	-	-	-	-	-	-

Category, ItemNO, Class	Summary / CompID / System	Scope / Method / Procedure	Iso No. Comp. Desc. Code Case		Period 1 97	Period 1 99	Period 1 00	Period 2 02	Period 2 03	Period 2 05	Period 3 06	Period 3 08
L-B	I955061			ISI	-	-	-	-	-	-	-	-
L2.40	#61		TENDON CORROSION PROTECTION MEDIUM	AUG	-	-	-	-	-	-	-	-
CC	CONTAINMENT			OWN	-	-	-	-	-	-	-	-
				PRE	-	-	-	-	-	-	-	-
L-B	I955062			ISI	-	-	-	-	-	-	-	-
L2.40	#62		TENDON CORROSION PROTECTION MEDIUM	AUG	-	-	-	-	-	-	-	-
CC	CONTAINMENT			OWN	-	-	-	-	-	-	-	-
				PRE	-	-	-	-	-	-	-	-
L-B	I955063			ISI	-	-	-	-	-	-	-	-
L2.40	#63		TENDON CORROSION PROTECTION MEDIUM	AUG	-	-	-	-	-	-	-	-
CC	CONTAINMENT			OWN	-	-	-	-	-	-	-	-
				PRE	-	-	-	-	-	-	-	-
L-B	I955064			ISI	-	-	-	-	-	-	-	-
L2.40	#64		TENDON CORROSION PROTECTION MEDIUM	AUG	-	-	-	-	-	-	-	-
CC	CONTAINMENT			OWN	-	-	-	-	-	-	-	-
				PRE	-	-	-	-	-	-	-	-
L-B	I955065			ISI	-	-	-	-	-	-	-	-
L2.40	#65		TENDON CORROSION PROTECTION MEDIUM	AUG	-	-	-	-	-	-	-	-
CC	CONTAINMENT			OWN	-	-	-	-	-	-	-	-
				PRE	-	-	-	-	-	-	-	-
L-B	I955066	ISI/VT/FT		ISI	-	-	r	c	-	-	-	-
L2.40	#66		TENDON CORROSION PROTECTION MEDIUM	AUG	-	-	-	-	-	-	-	-
CC	CONTAINMENT			OWN	-	-	-	-	-	-	-	-
				PRE	-	-	-	-	-	-	-	-
L-B	I955067			ISI	-	-	-	-	-	-	-	-
L2.40	#67		TENDON CORROSION PROTECTION MEDIUM	AUG	-	-	-	-	-	-	-	-
CC	CONTAINMENT			OWN	-	-	-	-	-	-	-	-
				PRE	-	-	-	-	-	-	-	-
L-B	I955068			ISI	-	-	-	-	-	-	-	-
L2.40	#68		TENDON CORROSION PROTECTION MEDIUM	AUG	-	-	-	-	-	-	-	-
CC	CONTAINMENT			OWN	-	-	-	-	-	-	-	-
				PRE	-	-	-	-	-	-	-	-
L-B	I955069			ISI	-	-	-	-	-	-	-	-
L2.40	#69		TENDON CORROSION PROTECTION MEDIUM	AUG	-	-	-	-	-	-	-	-
CC	CONTAINMENT			OWN	-	-	-	-	-	-	-	-
				PRE	-	-	-	-	-	-	-	-
L-B	I955070			ISI	-	-	-	-	-	-	-	-
L2.40	#70		TENDON CORROSION PROTECTION MEDIUM	AUG	-	-	-	-	-	-	-	-
CC	CONTAINMENT			OWN	-	-	-	-	-	-	-	-
				PRE	-	-	-	-	-	-	-	-

Category, ItemNO, Class	Summary / CompID / System	Scope / Method / Procedure	Iso No. Comp. Desc. Code Case		Period 1 97	Period 1 99	Period 1 00	Period 2 02	Period 2 03	Period 2 05	Period 3 06	Period 3 08
L-B	I955071	ISI/VT/FT		ISI	-	-	-	-	-	s	-	-
L2.40	#71		TENDON CORROSION PROTECTION MEDIUM	AUG	-	-	-	-	-	-	-	-
CC	CONTAINMENT			OWN	-	-	-	-	-	-	-	-
				PRE	-	-	-	-	-	-	-	-
L-B	I955072	ISI/VT/FT		ISI	-	-	-	-	-	s	-	-
L2.40	#72		TENDON CORROSION PROTECTION MEDIUM	AUG	-	-	-	-	-	-	-	-
CC	CONTAINMENT			OWN	-	-	-	-	-	-	-	-
				PRE	-	-	-	-	-	-	-	-
L-B	I955073	ISI/VT/FT		ISI	-	-	-	-	-	s	-	-
L2.40	#73		TENDON CORROSION PROTECTION MEDIUM	AUG	-	-	-	-	-	-	-	-
CC	CONTAINMENT			OWN	-	-	-	-	-	-	-	-
				PRE	-	-	-	-	-	-	-	-
L-B	I955074			ISI	-	-	-	-	-	-	-	-
L2.40	#74		TENDON CORROSION PROTECTION MEDIUM	AUG	-	-	-	-	-	-	-	-
CC	CONTAINMENT			OWN	-	-	-	-	-	-	-	-
				PRE	-	-	-	-	-	-	-	-
L-B	I955075			ISI	-	-	-	-	-	-	-	-
L2.40	#75		TENDON CORROSION PROTECTION MEDIUM	AUG	-	-	-	-	-	-	-	-
CC	CONTAINMENT			OWN	-	-	-	-	-	-	-	-
				PRE	-	-	-	-	-	-	-	-
L-B	I955076			ISI	-	-	-	-	-	-	-	-
L2.40	#76		TENDON CORROSION PROTECTION MEDIUM	AUG	-	-	-	-	-	-	-	-
CC	CONTAINMENT			OWN	-	-	-	-	-	-	-	-
				PRE	-	-	-	-	-	-	-	-
L-B	I955077	ISI/VT/FT		ISI	-	-	r	c	-	-	-	-
L2.40	#77		TENDON CORROSION PROTECTION MEDIUM	AUG	-	-	-	-	-	-	-	-
CC	CONTAINMENT			OWN	-	-	-	-	-	-	-	-
				PRE	-	-	-	-	-	-	-	-
L-B	I955078			ISI	-	-	-	-	-	-	-	-
L2.40	#78		TENDON CORROSION PROTECTION MEDIUM	AUG	-	-	-	-	-	-	-	-
CC	CONTAINMENT			OWN	-	-	-	-	-	-	-	-
				PRE	-	-	-	-	-	-	-	-
L-B	I955079			ISI	-	-	-	-	-	-	-	-
L2.40	#79		TENDON CORROSION PROTECTION MEDIUM	AUG	-	-	-	-	-	-	-	-
CC	CONTAINMENT			OWN	-	-	-	-	-	-	-	-
				PRE	-	-	-	-	-	-	-	-
L-B	I955080			ISI	-	-	-	-	-	-	-	-
L2.40	#80		TENDON CORROSION PROTECTION MEDIUM	AUG	-	-	-	-	-	-	-	-
CC	CONTAINMENT			OWN	-	-	-	-	-	-	-	-
				PRE	-	-	-	-	-	-	-	-

Category, ItemNO, Class	Summary / CompID / System	Scope / Method / Procedure	Iso No. Comp. Desc. Code Case		Period 1 97	Period 1 99	Period 1 00	Period 2 02	Period 2 03	Period 2 05	Period 3 06	Period 3 08
L-B	I955081			ISI	-	-	-	-	-	-	-	-
L2.40	#81		TENDON CORROSION PROTECTION MEDIUM	AUG	-	-	-	-	-	-	-	-
CC	CONTAINMENT			OWN	-	-	-	-	-	-	-	-
				PRE	-	-	-	-	-	-	-	-
L-B	I955082			ISI	-	-	-	-	-	-	-	-
L2.40	#82		TENDON CORROSION PROTECTION MEDIUM	AUG	-	-	-	-	-	-	-	-
CC	CONTAINMENT			OWN	-	-	-	-	-	-	-	-
				PRE	-	-	-	-	-	-	-	-
L-B	I955083			ISI	-	-	-	-	-	-	-	-
L2.40	#83		TENDON CORROSION PROTECTION MEDIUM	AUG	-	-	-	-	-	-	-	-
CC	CONTAINMENT			OWN	-	-	-	-	-	-	-	-
				PRE	-	-	-	-	-	-	-	-
L-B	I955084			ISI	-	-	-	-	-	-	-	-
L2.40	#84		TENDON CORROSION PROTECTION MEDIUM	AUG	-	-	-	-	-	-	-	-
CC	CONTAINMENT			OWN	-	-	-	-	-	-	-	-
				PRE	-	-	-	-	-	-	-	-
L-B	I955085			ISI	-	-	-	-	-	-	-	-
L2.40	#85		TENDON CORROSION PROTECTION MEDIUM	AUG	-	-	-	-	-	-	-	-
CC	CONTAINMENT			OWN	-	-	-	-	-	-	-	-
				PRE	-	-	-	-	-	-	-	-
L-B	I955086			ISI	-	-	-	-	-	-	-	-
L2.40	#86		TENDON CORROSION PROTECTION MEDIUM	AUG	-	-	-	-	-	-	-	-
CC	CONTAINMENT			OWN	-	-	-	-	-	-	-	-
				PRE	-	-	-	-	-	-	-	-
L-B	I955087			ISI	-	-	-	-	-	-	-	-
L2.40	#87		TENDON CORROSION PROTECTION MEDIUM	AUG	-	-	-	-	-	-	-	-
CC	CONTAINMENT			OWN	-	-	-	-	-	-	-	-
				PRE	-	-	-	-	-	-	-	-
L-B	I955088			ISI	-	-	-	-	-	-	-	-
L2.40	#88		TENDON CORROSION PROTECTION MEDIUM	AUG	-	-	-	-	-	-	-	-
CC	CONTAINMENT			OWN	-	-	-	-	-	-	-	-
				PRE	-	-	-	-	-	-	-	-
L-B	I955089			ISI	-	-	-	-	-	-	-	-
L2.40	#89		TENDON CORROSION PROTECTION MEDIUM	AUG	-	-	-	-	-	-	-	-
CC	CONTAINMENT			OWN	-	-	-	-	-	-	-	-
				PRE	-	-	-	-	-	-	-	-
L-B	I955090			ISI	-	-	-	-	-	-	-	-
L2.40	#90		TENDON CORROSION PROTECTION MEDIUM	AUG	-	-	-	-	-	-	-	-
CC	CONTAINMENT			OWN	-	-	-	-	-	-	-	-
				PRE	-	-	-	-	-	-	-	-

Category, ItemNO, Class	Summary / CompID / System	Scope / Method / Procedure	Iso No. Comp. Desc. Code Case		Period 1 97	Period 1 99	Period 1 00	Period 2 02	Period 2 03	Period 2 05	Period 3 06	Period 3 08
L-B	I955091			ISI	-	-	-	-	-	-	-	-
L2.40	#91		TENDON CORROSION PROTECTION MEDIUM	AUG	-	-	-	-	-	-	-	-
CC	CONTAINMENT			OWN	-	-	-	-	-	-	-	-
				PRE	-	-	-	-	-	-	-	-
L-B	I955092			ISI	-	-	-	-	-	-	-	-
L2.40	#92		TENDON CORROSION PROTECTION MEDIUM	AUG	-	-	-	-	-	-	-	-
CC	CONTAINMENT			OWN	-	-	-	-	-	-	-	-
				PRE	-	-	-	-	-	-	-	-
L-B	I955093			ISI	-	-	-	-	-	-	-	-
L2.40	#93		TENDON CORROSION PROTECTION MEDIUM	AUG	-	-	-	-	-	-	-	-
CC	CONTAINMENT			OWN	-	-	-	-	-	-	-	-
				PRE	-	-	-	-	-	-	-	-
L-B	I955094			ISI	-	-	-	-	-	-	-	-
L2.40	#94		TENDON CORROSION PROTECTION MEDIUM	AUG	-	-	-	-	-	-	-	-
CC	CONTAINMENT			OWN	-	-	-	-	-	-	-	-
				PRE	-	-	-	-	-	-	-	-
L-B	I955095			ISI	-	-	-	-	-	-	-	-
L2.40	#95		TENDON CORROSION PROTECTION MEDIUM	AUG	-	-	-	-	-	-	-	-
CC	CONTAINMENT			OWN	-	-	-	-	-	-	-	-
				PRE	-	-	-	-	-	-	-	-
L-B	I955096			ISI	-	-	-	-	-	-	-	-
L2.40	#96		TENDON CORROSION PROTECTION MEDIUM	AUG	-	-	-	-	-	-	-	-
CC	CONTAINMENT			OWN	-	-	-	-	-	-	-	-
				PRE	-	-	-	-	-	-	-	-
L-B	I955097			ISI	-	-	-	-	-	-	-	-
L2.40	#97		TENDON CORROSION PROTECTION MEDIUM	AUG	-	-	-	-	-	-	-	-
CC	CONTAINMENT			OWN	-	-	-	-	-	-	-	-
				PRE	-	-	-	-	-	-	-	-
L-B	I955098			ISI	-	-	-	-	-	-	-	-
L2.40	#98		TENDON CORROSION PROTECTION MEDIUM	AUG	-	-	-	-	-	-	-	-
CC	CONTAINMENT			OWN	-	-	-	-	-	-	-	-
				PRE	-	-	-	-	-	-	-	-
L-B	I955099			ISI	-	-	-	-	-	-	-	-
L2.40	#99		TENDON CORROSION PROTECTION MEDIUM	AUG	-	-	-	-	-	-	-	-
CC	CONTAINMENT			OWN	-	-	-	-	-	-	-	-
				PRE	-	-	-	-	-	-	-	-
L-B	I955100			ISI	-	-	-	-	-	-	-	-
L2.40	#100		TENDON CORROSION PROTECTION MEDIUM	AUG	-	-	-	-	-	-	-	-
CC	CONTAINMENT			OWN	-	-	-	-	-	-	-	-
				PRE	-	-	-	-	-	-	-	-

Category, ItemNO, Class	Summary / CompID / System	Scope / Method / Procedure	Iso No. Comp. Desc. Code Case		Period 1 97	Period 1 99	Period 1 00	Period 2 02	Period 2 03	Period 2 05	Period 3 06	Period 3 08
L-B	I955101			ISI	-	-	-	-	-	-	-	-
L2.40	#101		TENDON CORROSION PROTECTION MEDIUM	AUG	-	-	-	-	-	-	-	-
CC	CONTAINMENT			OWN	-	-	-	-	-	-	-	-
				PRE	-	-	-	-	-	-	-	-
L-B	I955102			ISI	-	-	-	-	-	-	-	-
L2.40	#102		TENDON CORROSION PROTECTION MEDIUM	AUG	-	-	-	-	-	-	-	-
CC	CONTAINMENT			OWN	-	-	-	-	-	-	-	-
				PRE	-	-	-	-	-	-	-	-
L-B	I955103			ISI	-	-	-	-	-	-	-	-
L2.40	#103		TENDON CORROSION PROTECTION MEDIUM	AUG	-	-	-	-	-	-	-	-
CC	CONTAINMENT			OWN	-	-	-	-	-	-	-	-
				PRE	-	-	-	-	-	-	-	-
L-B	I955104			ISI	-	-	-	-	-	-	-	-
L2.40	#104		TENDON CORROSION PROTECTION MEDIUM	AUG	-	-	-	-	-	-	-	-
CC	CONTAINMENT			OWN	-	-	-	-	-	-	-	-
				PRE	-	-	-	-	-	-	-	-
L-B	I955105	ISI/VT/FT		ISI	-	-	r	c	-	-	-	-
L2.40	#105		TENDON CORROSION PROTECTION MEDIUM	AUG	-	-	-	-	-	-	-	-
CC	CONTAINMENT			OWN	-	-	-	-	-	-	-	-
				PRE	-	-	-	-	-	-	-	-
L-B	I955106			ISI	-	-	-	-	-	-	-	-
L2.40	#106		TENDON CORROSION PROTECTION MEDIUM	AUG	-	-	-	-	-	-	-	-
CC	CONTAINMENT			OWN	-	-	-	-	-	-	-	-
				PRE	-	-	-	-	-	-	-	-
L-B	I955107			ISI	-	-	-	-	-	-	-	-
L2.40	#107		TENDON CORROSION PROTECTION MEDIUM	AUG	-	-	-	-	-	-	-	-
CC	CONTAINMENT			OWN	-	-	-	-	-	-	-	-
				PRE	-	-	-	-	-	-	-	-
L-B	I955108			ISI	-	-	-	-	-	-	-	-
L2.40	#108		TENDON CORROSION PROTECTION MEDIUM	AUG	-	-	-	-	-	-	-	-
CC	CONTAINMENT			OWN	-	-	-	-	-	-	-	-
				PRE	-	-	-	-	-	-	-	-
L-B	I955109			ISI	-	-	-	-	-	-	-	-
L2.40	#109		TENDON CORROSION PROTECTION MEDIUM	AUG	-	-	-	-	-	-	-	-
CC	CONTAINMENT			OWN	-	-	-	-	-	-	-	-
				PRE	-	-	-	-	-	-	-	-
L-B	I955110	ISI/VT/FT		ISI	-	-	r	c	-	-	-	-
L2.40	#110		TENDON CORROSION PROTECTION MEDIUM	AUG	-	-	-	-	-	-	-	-
CC	CONTAINMENT			OWN	-	-	-	-	-	-	-	-
				PRE	-	-	-	-	-	-	-	-

Category, ItemNO, Class	Summary / CompID / System	Scope / Method / Procedure	Iso No. Comp. Desc. Code Case		Period 1 97	Period 1 99	Period 1 00	Period 2 02	Period 2 03	Period 2 05	Period 3 06	Period 3 08
L-B	I955111	ISI/VT/FT		ISI	-	-	-	-	-	s	-	-
L2.40	#111		TENDON CORROSION PROTECTION MEDIUM	AUG	-	-	-	-	-	-	-	-
CC	CONTAINMENT			OWN	-	-	-	-	-	-	-	-
				PRE	-	-	-	-	-	-	-	-
L-B	I955112	ISI/VT/FT		ISI	-	-	r	c	-	b	-	-
L2.40	#112	ISI/VT/FT	TENDON CORROSION PROTECTION MEDIUM	AUG	-	-	-	-	-	-	-	-
CC	CONTAINMENT			OWN	-	-	-	-	-	-	-	-
				PRE	-	-	-	-	-	-	-	-
L-B	I955113	ISI/VT/FT		ISI	-	-	-	-	-	s	-	-
L2.40	#113		TENDON CORROSION PROTECTION MEDIUM	AUG	-	-	-	-	-	-	-	-
CC	CONTAINMENT			OWN	-	-	-	-	-	-	-	-
				PRE	-	-	-	-	-	-	-	-
L-B	I955114	ISI/VT/FT		ISI	-	-	-	-	-	s	-	-
L2.40	#114		TENDON CORROSION PROTECTION MEDIUM	AUG	-	-	-	-	-	-	-	-
CC	CONTAINMENT			OWN	-	-	-	-	-	-	-	-
				PRE	-	-	-	-	-	-	-	-
L-B	I955115	ISI/VT/FT		ISI	-	-	-	-	-	s	-	-
L2.40	#115		TENDON CORROSION PROTECTION MEDIUM	AUG	-	-	-	-	-	-	-	-
CC	CONTAINMENT			OWN	-	-	-	-	-	-	-	-
				PRE	-	-	-	-	-	-	-	-
L-B	I955116	ISI/VT/FT		ISI	-	-	-	-	-	s	-	-
L2.40	#116		TENDON CORROSION PROTECTION MEDIUM	AUG	-	-	-	-	-	-	-	-
CC	CONTAINMENT			OWN	-	-	-	-	-	-	-	-
				PRE	-	-	-	-	-	-	-	-
L-B	I955117	ISI/VT/FT		ISI	-	-	-	-	-	s	-	-
L2.40	#117		TENDON CORROSION PROTECTION MEDIUM	AUG	-	-	-	-	-	-	-	-
CC	CONTAINMENT			OWN	-	-	-	-	-	-	-	-
				PRE	-	-	-	-	-	-	-	-
L-B	I955118	ISI/VT/FT		ISI	-	-	-	-	-	s	-	-
L2.40	#118		TENDON CORROSION PROTECTION MEDIUM	AUG	-	-	-	-	-	-	-	-
CC	CONTAINMENT			OWN	-	-	-	-	-	-	-	-
				PRE	-	-	-	-	-	-	-	-
L-B	I955119	ISI/VT/FT		ISI	-	-	-	-	-	s	-	-
L2.40	#119		TENDON CORROSION PROTECTION MEDIUM	AUG	-	-	-	-	-	-	-	-
CC	CONTAINMENT			OWN	-	-	-	-	-	-	-	-
				PRE	-	-	-	-	-	-	-	-
L-B	I955120	ISI/VT/FT		ISI	-	-	-	-	-	s	-	-
L2.40	#120		TENDON CORROSION PROTECTION MEDIUM	AUG	-	-	-	-	-	-	-	-
CC	CONTAINMENT			OWN	-	-	-	-	-	-	-	-
				PRE	-	-	-	-	-	-	-	-

Category, ItemNO, Class	Summary / CompID / System	Scope / Method / Procedure	Iso No. Comp. Desc. Code Case		Period 1 97	Period 1 99	Period 1 00	Period 2 02	Period 2 03	Period 2 05	Period 3 06	Period 3 08
L-B	I955121	ISI/VT/FT		ISI	-	-	-	-	-	s	-	-
L2.40	#121		TENDON CORROSION PROTECTION MEDIUM	AUG	-	-	-	-	-	-	-	-
CC	CONTAINMENT			OWN	-	-	-	-	-	-	-	-
				PRE	-	-	-	-	-	-	-	-
L-B	I955122	ISI/VT/FT		ISI	-	-	r	c	-	b	-	-
L2.40	#122	ISI/VT/FT	TENDON CORROSION PROTECTION MEDIUM	AUG	-	-	-	-	-	-	-	-
CC	CONTAINMENT			OWN	-	-	-	-	-	-	-	-
				PRE	-	-	-	-	-	-	-	-
L-B	I955123			ISI	-	-	-	-	-	-	-	-
L2.40	#123		TENDON CORROSION PROTECTION MEDIUM	AUG	-	-	-	-	-	-	-	-
CC	CONTAINMENT			OWN	-	-	-	-	-	-	-	-
				PRE	-	-	-	-	-	-	-	-
L-B	I955124			ISI	-	-	-	-	-	-	-	-
L2.40	#124		TENDON CORROSION PROTECTION MEDIUM	AUG	-	-	-	-	-	-	-	-
CC	CONTAINMENT			OWN	-	-	-	-	-	-	-	-
				PRE	-	-	-	-	-	-	-	-
L-B	I955125			ISI	-	-	-	-	-	-	-	-
L2.40	#125		TENDON CORROSION PROTECTION MEDIUM	AUG	-	-	-	-	-	-	-	-
CC	CONTAINMENT			OWN	-	-	-	-	-	-	-	-
				PRE	-	-	-	-	-	-	-	-
L-B	I955126	ISI/VT/FT		ISI	-	-	-	-	-	s	-	-
L2.40	#126		TENDON CORROSION PROTECTION MEDIUM	AUG	-	-	-	-	-	-	-	-
CC	CONTAINMENT			OWN	-	-	-	-	-	-	-	-
				PRE	-	-	-	-	-	-	-	-
L-B	I955127			ISI	-	-	-	-	-	-	-	-
L2.40	#127		TENDON CORROSION PROTECTION MEDIUM	AUG	-	-	-	-	-	-	-	-
CC	CONTAINMENT			OWN	-	-	-	-	-	-	-	-
				PRE	-	-	-	-	-	-	-	-
L-B	I955128	ISI/VT/FT		ISI	-	-	r	c	-	-	-	-
L2.40	#128		TENDON CORROSION PROTECTION MEDIUM	AUG	-	-	-	-	-	-	-	-
CC	CONTAINMENT			OWN	-	-	-	-	-	-	-	-
				PRE	-	-	-	-	-	-	-	-
L-B	I955129	ISI/VT/FT		ISI	-	-	r	c	-	-	-	-
L2.40	#129		TENDON CORROSION PROTECTION MEDIUM	AUG	-	-	-	-	-	-	-	-
CC	CONTAINMENT			OWN	-	-	-	-	-	-	-	-
				PRE	-	-	-	-	-	-	-	-
L-B	I955130			ISI	-	-	-	-	-	-	-	-
L2.40	#130		TENDON CORROSION PROTECTION MEDIUM	AUG	-	-	-	-	-	-	-	-
CC	CONTAINMENT			OWN	-	-	-	-	-	-	-	-
				PRE	-	-	-	-	-	-	-	-

Category, ItemNO, Class	Summary / CompID / System	Scope / Method / Procedure	Iso No. Comp. Desc. Code Case		Period 1 97	Period 1 99	Period 1 00	Period 2 02	Period 2 03	Period 2 05	Period 3 06	Period 3 08
L-B	I955131			ISI	-	-	-	-	-	-	-	-
L2.40	#131		TENDON CORROSION PROTECTION MEDIUM	AUG	-	-	-	-	-	-	-	-
CC	CONTAINMENT			OWN	-	-	-	-	-	-	-	-
				PRE	-	-	-	-	-	-	-	-
L-B	I955132	ISI/VT/FT		ISI	-	-	-	-	-	s	-	-
L2.40	#132		TENDON CORROSION PROTECTION MEDIUM	AUG	-	-	-	-	-	-	-	-
CC	CONTAINMENT			OWN	-	-	-	-	-	-	-	-
				PRE	-	-	-	-	-	-	-	-
L-B	I955133			ISI	-	-	-	-	-	-	-	-
L2.40	#133		TENDON CORROSION PROTECTION MEDIUM	AUG	-	-	-	-	-	-	-	-
CC	CONTAINMENT			OWN	-	-	-	-	-	-	-	-
				PRE	-	-	-	-	-	-	-	-
L-B	I955134			ISI	-	-	-	-	-	-	-	-
L2.40	#134		TENDON CORROSION PROTECTION MEDIUM	AUG	-	-	-	-	-	-	-	-
CC	CONTAINMENT			OWN	-	-	-	-	-	-	-	-
				PRE	-	-	-	-	-	-	-	-
L-B	I955135			ISI	-	-	-	-	-	-	-	-
L2.40	#135		TENDON CORROSION PROTECTION MEDIUM	AUG	-	-	-	-	-	-	-	-
CC	CONTAINMENT			OWN	-	-	-	-	-	-	-	-
				PRE	-	-	-	-	-	-	-	-
L-B	I955136			ISI	-	-	-	-	-	-	-	-
L2.40	#136		TENDON CORROSION PROTECTION MEDIUM	AUG	-	-	-	-	-	-	-	-
CC	CONTAINMENT			OWN	-	-	-	-	-	-	-	-
				PRE	-	-	-	-	-	-	-	-
L-B	I955137			ISI	-	-	-	-	-	-	-	-
L2.40	#137		TENDON CORROSION PROTECTION MEDIUM	AUG	-	-	-	-	-	-	-	-
CC	CONTAINMENT			OWN	-	-	-	-	-	-	-	-
				PRE	-	-	-	-	-	-	-	-
L-B	I955138			ISI	-	-	-	-	-	-	-	-
L2.40	#138		TENDON CORROSION PROTECTION MEDIUM	AUG	-	-	-	-	-	-	-	-
CC	CONTAINMENT			OWN	-	-	-	-	-	-	-	-
				PRE	-	-	-	-	-	-	-	-
L-B	I955139			ISI	-	-	-	-	-	-	-	-
L2.40	#139		TENDON CORROSION PROTECTION MEDIUM	AUG	-	-	-	-	-	-	-	-
CC	CONTAINMENT			OWN	-	-	-	-	-	-	-	-
				PRE	-	-	-	-	-	-	-	-
L-B	I955140			ISI	-	-	-	-	-	-	-	-
L2.40	#140		TENDON CORROSION PROTECTION MEDIUM	AUG	-	-	-	-	-	-	-	-
CC	CONTAINMENT			OWN	-	-	-	-	-	-	-	-
				PRE	-	-	-	-	-	-	-	-

Category, ItemNO, Class	Summary / CompID / System	Scope / Method / Procedure	Iso No. Comp. Desc. Code Case		Period 1 97	Period 1 99	Period 1 00	Period 2 02	Period 2 03	Period 2 05	Period 3 06	Period 3 08
L-B	I955141			ISI	-	-	-	-	-	-	-	-
L2.40	#141		TENDON CORROSION PROTECTION MEDIUM	AUG	-	-	-	-	-	-	-	-
CC	CONTAINMENT			OWN	-	-	-	-	-	-	-	-
				PRE	-	-	-	-	-	-	-	-
L-B	I955142			ISI	-	-	-	-	-	-	-	-
L2.40	#142		TENDON CORROSION PROTECTION MEDIUM	AUG	-	-	-	-	-	-	-	-
CC	CONTAINMENT			OWN	-	-	-	-	-	-	-	-
				PRE	-	-	-	-	-	-	-	-
L-B	I955143			ISI	-	-	-	-	-	-	-	-
L2.40	#143		TENDON CORROSION PROTECTION MEDIUM	AUG	-	-	-	-	-	-	-	-
CC	CONTAINMENT			OWN	-	-	-	-	-	-	-	-
				PRE	-	-	-	-	-	-	-	-
L-B	I955144			ISI	-	-	-	-	-	-	-	-
L2.40	#144		TENDON CORROSION PROTECTION MEDIUM	AUG	-	-	-	-	-	-	-	-
CC	CONTAINMENT			OWN	-	-	-	-	-	-	-	-
				PRE	-	-	-	-	-	-	-	-
L-B	I955145	ISI/VT/FT		ISI	-	-	-	-	-	s	-	-
L2.40	#145		TENDON CORROSION PROTECTION MEDIUM	AUG	-	-	-	-	-	-	-	-
CC	CONTAINMENT			OWN	-	-	-	-	-	-	-	-
				PRE	-	-	-	-	-	-	-	-
L-B	I955146			ISI	-	-	-	-	-	-	-	-
L2.40	#146		TENDON CORROSION PROTECTION MEDIUM	AUG	-	-	-	-	-	-	-	-
CC	CONTAINMENT			OWN	-	-	-	-	-	-	-	-
				PRE	-	-	-	-	-	-	-	-
L-B	I955147			ISI	-	-	-	-	-	-	-	-
L2.40	#147		TENDON CORROSION PROTECTION MEDIUM	AUG	-	-	-	-	-	-	-	-
CC	CONTAINMENT			OWN	-	-	-	-	-	-	-	-
				PRE	-	-	-	-	-	-	-	-
L-B	I955148			ISI	-	-	-	-	-	-	-	-
L2.40	#148		TENDON CORROSION PROTECTION MEDIUM	AUG	-	-	-	-	-	-	-	-
CC	CONTAINMENT			OWN	-	-	-	-	-	-	-	-
				PRE	-	-	-	-	-	-	-	-
L-B	I955149			ISI	-	-	-	-	-	-	-	-
L2.40	#149		TENDON CORROSION PROTECTION MEDIUM	AUG	-	-	-	-	-	-	-	-
CC	CONTAINMENT			OWN	-	-	-	-	-	-	-	-
				PRE	-	-	-	-	-	-	-	-
L-B	I955150			ISI	-	-	-	-	-	-	-	-
L2.40	#150		TENDON CORROSION PROTECTION MEDIUM	AUG	-	-	-	-	-	-	-	-
CC	CONTAINMENT			OWN	-	-	-	-	-	-	-	-
				PRE	-	-	-	-	-	-	-	-

Category, ItemNO, Class	Summary / CompID / System	Scope / Method / Procedure	Iso No. Comp. Desc. Code Case		Period 1 97	Period 1 99	Period 1 00	Period 2 02	Period 2 03	Period 2 05	Period 3 06	Period 3 08
L-B	I955151			ISI	-	-	-	-	-	-	-	-
L2.40	#151		TENDON CORROSION PROTECTION MEDIUM	AUG	-	-	-	-	-	-	-	-
CC	CONTAINMENT			OWN	-	-	-	-	-	-	-	-
				PRE	-	-	-	-	-	-	-	-
L-B	I955152	ISI/VT/FT		ISI	-	-	-	-	-	s	-	-
L2.40	#152		TENDON CORROSION PROTECTION MEDIUM	AUG	-	-	-	-	-	-	-	-
CC	CONTAINMENT			OWN	-	-	-	-	-	-	-	-
				PRE	-	-	-	-	-	-	-	-
L-B	I955153			ISI	-	-	-	-	-	-	-	-
L2.40	#153		TENDON CORROSION PROTECTION MEDIUM	AUG	-	-	-	-	-	-	-	-
CC	CONTAINMENT			OWN	-	-	-	-	-	-	-	-
				PRE	-	-	-	-	-	-	-	-
L-B	I955154			ISI	-	-	-	-	-	-	-	-
L2.40	#154		TENDON CORROSION PROTECTION MEDIUM	AUG	-	-	-	-	-	-	-	-
CC	CONTAINMENT			OWN	-	-	-	-	-	-	-	-
				PRE	-	-	-	-	-	-	-	-
L-B	I955155			ISI	-	-	-	-	-	-	-	-
L2.40	#155		TENDON CORROSION PROTECTION MEDIUM	AUG	-	-	-	-	-	-	-	-
CC	CONTAINMENT			OWN	-	-	-	-	-	-	-	-
				PRE	-	-	-	-	-	-	-	-
L-B	I955156			ISI	-	-	-	-	-	-	-	-
L2.40	#156		TENDON CORROSION PROTECTION MEDIUM	AUG	-	-	-	-	-	-	-	-
CC	CONTAINMENT			OWN	-	-	-	-	-	-	-	-
				PRE	-	-	-	-	-	-	-	-
L-B	I955157			ISI	-	-	-	-	-	-	-	-
L2.40	#157		TENDON CORROSION PROTECTION MEDIUM	AUG	-	-	-	-	-	-	-	-
CC	CONTAINMENT			OWN	-	-	-	-	-	-	-	-
				PRE	-	-	-	-	-	-	-	-
L-B	I955158			ISI	-	-	-	-	-	-	-	-
L2.40	#158		TENDON CORROSION PROTECTION MEDIUM	AUG	-	-	-	-	-	-	-	-
CC	CONTAINMENT			OWN	-	-	-	-	-	-	-	-
				PRE	-	-	-	-	-	-	-	-
L-B	I955159	ISI/VT/FT		ISI	-	-	-	-	-	s	-	-
L2.40	#159		TENDON CORROSION PROTECTION MEDIUM	AUG	-	-	-	-	-	-	-	-
CC	CONTAINMENT			OWN	-	-	-	-	-	-	-	-
				PRE	-	-	-	-	-	-	-	-
L-B	I955160	ISI/VT/FT		ISI	-	-	r	c	-	-	-	-
L2.40	#160		TENDON CORROSION PROTECTION MEDIUM	AUG	-	-	-	-	-	-	-	-
CC	CONTAINMENT			OWN	-	-	-	-	-	-	-	-
				PRE	-	-	-	-	-	-	-	-

Category, ItemNO, Class	Summary / CompID / System	Scope / Method / Procedure	Iso No. Comp. Desc. Code Case		Period 1 97	Period 1 99	Period 1 00	Period 2 02	Period 2 03	Period 2 05	Period 3 06	Period 3 08
L-B	I956001			ISI	-	-	-	-	-	-	-	-
L2.50	#1		TENDON FREE WATER	AUG	-	-	-	-	-	-	-	-
CC	CONTAINMENT			OWN	-	-	-	-	-	-	-	-
				PRE	-	-	-	-	-	-	-	-
L-B	I956002	ISI/VT/FT		ISI	-	-	r	c	-	-	-	-
L2.50	#2		TENDON FREE WATER	AUG	-	-	-	-	-	-	-	-
CC	CONTAINMENT			OWN	-	-	-	-	-	-	-	-
				PRE	-	-	-	-	-	-	-	-
L-B	I956003			ISI	-	-	-	-	-	-	-	-
L2.50	#3		TENDON FREE WATER	AUG	-	-	-	-	-	-	-	-
CC	CONTAINMENT			OWN	-	-	-	-	-	-	-	-
				PRE	-	-	-	-	-	-	-	-
L-B	I956004	ISI/VT/FT		ISI	-	-	r	c	-	-	-	-
L2.50	#4		TENDON FREE WATER	AUG	-	-	-	-	-	-	-	-
CC	CONTAINMENT			OWN	-	-	-	-	-	-	-	-
				PRE	-	-	-	-	-	-	-	-
L-B	I956005	ISI/VT/FT		ISI	-	-	-	-	-	s	-	-
L2.50	#5		TENDON FREE WATER	AUG	-	-	-	-	-	-	-	-
CC	CONTAINMENT			OWN	-	-	-	-	-	-	-	-
				PRE	-	-	-	-	-	-	-	-
L-B	I956006			ISI	-	-	-	-	-	-	-	-
L2.50	#6		TENDON FREE WATER	AUG	-	-	-	-	-	-	-	-
CC	CONTAINMENT			OWN	-	-	-	-	-	-	-	-
				PRE	-	-	-	-	-	-	-	-
L-B	I956007			ISI	-	-	-	-	-	-	-	-
L2.50	#7		TENDON FREE WATER	AUG	-	-	-	-	-	-	-	-
CC	CONTAINMENT			OWN	-	-	-	-	-	-	-	-
				PRE	-	-	-	-	-	-	-	-
L-B	I956008			ISI	-	-	-	-	-	-	-	-
L2.50	#8		TENDON FREE WATER	AUG	-	-	-	-	-	-	-	-
CC	CONTAINMENT			OWN	-	-	-	-	-	-	-	-
				PRE	-	-	-	-	-	-	-	-
L-B	I956009	ISI/VT/FT		ISI	-	-	r	c	-	-	-	-
L2.50	#9		TENDON FREE WATER	AUG	-	-	-	-	-	-	-	-
CC	CONTAINMENT			OWN	-	-	-	-	-	-	-	-
				PRE	-	-	-	-	-	-	-	-
L-B	I956010	ISI/VT/FT		ISI	-	-	r	c	-	-	-	-
L2.50	#10		TENDON FREE WATER	AUG	-	-	-	-	-	-	-	-
CC	CONTAINMENT			OWN	-	-	-	-	-	-	-	-
				PRE	-	-	-	-	-	-	-	-

Category, ItemNO, Class	Summary / CompID / System	Scope / Method / Procedure	Iso No. Comp. Desc. Code Case		Period 1 97	Period 1 99	Period 1 00	Period 2 02	Period 2 03	Period 2 05	Period 3 06	Period 3 08
L-B	I956011			ISI	-	-	-	-	-	-	-	-
L2.50	#11		TENDON FREE WATER	AUG	-	-	-	-	-	-	-	-
CC	CONTAINMENT			OWN	-	-	-	-	-	-	-	-
				PRE	-	-	-	-	-	-	-	-
L-B	I956012			ISI	-	-	-	-	-	-	-	-
L2.50	#12		TENDON FREE WATER	AUG	-	-	-	-	-	-	-	-
CC	CONTAINMENT			OWN	-	-	-	-	-	-	-	-
				PRE	-	-	-	-	-	-	-	-
L-B	I956013			ISI	-	-	-	-	-	-	-	-
L2.50	#13		TENDON FREE WATER	AUG	-	-	-	-	-	-	-	-
CC	CONTAINMENT			OWN	-	-	-	-	-	-	-	-
				PRE	-	-	-	-	-	-	-	-
L-B	I956014	ISI/VT/FT		ISI	-	-	-	-	-	s	-	-
L2.50	#14		TENDON FREE WATER	AUG	-	-	-	-	-	-	-	-
CC	CONTAINMENT			OWN	-	-	-	-	-	-	-	-
				PRE	-	-	-	-	-	-	-	-
L-B	I956015			ISI	-	-	-	-	-	-	-	-
L2.50	#15		TENDON FREE WATER	AUG	-	-	-	-	-	-	-	-
CC	CONTAINMENT			OWN	-	-	-	-	-	-	-	-
				PRE	-	-	-	-	-	-	-	-
L-B	I956016	ISI/VT/FT		ISI	-	-	-	-	-	s	-	-
L2.50	#16		TENDON FREE WATER	AUG	-	-	-	-	-	-	-	-
CC	CONTAINMENT			OWN	-	-	-	-	-	-	-	-
				PRE	-	-	-	-	-	-	-	-
L-B	I956017			ISI	-	-	-	-	-	-	-	-
L2.50	#17		TENDON FREE WATER	AUG	-	-	-	-	-	-	-	-
CC	CONTAINMENT			OWN	-	-	-	-	-	-	-	-
				PRE	-	-	-	-	-	-	-	-
L-B	I956018			ISI	-	-	-	-	-	-	-	-
L2.50	#18		TENDON FREE WATER	AUG	-	-	-	-	-	-	-	-
CC	CONTAINMENT			OWN	-	-	-	-	-	-	-	-
				PRE	-	-	-	-	-	-	-	-
L-B	I956019			ISI	-	-	-	-	-	-	-	-
L2.50	#19		TENDON FREE WATER	AUG	-	-	-	-	-	-	-	-
CC	CONTAINMENT			OWN	-	-	-	-	-	-	-	-
				PRE	-	-	-	-	-	-	-	-
L-B	I956020			ISI	-	-	-	-	-	-	-	-
L2.50	#20		TENDON FREE WATER	AUG	-	-	-	-	-	-	-	-
CC	CONTAINMENT			OWN	-	-	-	-	-	-	-	-
				PRE	-	-	-	-	-	-	-	-

Category, ItemNO, Class	Summary / CompID / System	Scope / Method / Procedure	Iso No. Comp. Desc. Code Case		Period 1 97	Period 1 99	Period 1 00	Period 2 02	Period 2 03	Period 2 05	Period 3 06	Period 3 08
L-B	I956021			ISI	-	-	-	-	-	-	-	-
L2.50	#21		TENDON FREE WATER	AUG	-	-	-	-	-	-	-	-
CC	CONTAINMENT			OWN	-	-	-	-	-	-	-	-
				PRE	-	-	-	-	-	-	-	-
L-B	I956022			ISI	-	-	-	-	-	-	-	-
L2.50	#22		TENDON FREE WATER	AUG	-	-	-	-	-	-	-	-
CC	CONTAINMENT			OWN	-	-	-	-	-	-	-	-
				PRE	-	-	-	-	-	-	-	-
L-B	I956023			ISI	-	-	-	-	-	-	-	-
L2.50	#23		TENDON FREE WATER	AUG	-	-	-	-	-	-	-	-
CC	CONTAINMENT			OWN	-	-	-	-	-	-	-	-
				PRE	-	-	-	-	-	-	-	-
L-B	I956024			ISI	-	-	-	-	-	-	-	-
L2.50	#24		TENDON FREE WATER	AUG	-	-	-	-	-	-	-	-
CC	CONTAINMENT			OWN	-	-	-	-	-	-	-	-
				PRE	-	-	-	-	-	-	-	-
L-B	I956025			ISI	-	-	-	-	-	-	-	-
L2.50	#25		TENDON FREE WATER	AUG	-	-	-	-	-	-	-	-
CC	CONTAINMENT			OWN	-	-	-	-	-	-	-	-
				PRE	-	-	-	-	-	-	-	-
L-B	I956026			ISI	-	-	-	-	-	-	-	-
L2.50	#26		TENDON FREE WATER	AUG	-	-	-	-	-	-	-	-
CC	CONTAINMENT			OWN	-	-	-	-	-	-	-	-
				PRE	-	-	-	-	-	-	-	-
L-B	I956027			ISI	-	-	-	-	-	-	-	-
L2.50	#27		TENDON FREE WATER	AUG	-	-	-	-	-	-	-	-
CC	CONTAINMENT			OWN	-	-	-	-	-	-	-	-
				PRE	-	-	-	-	-	-	-	-
L-B	I956028			ISI	-	-	-	-	-	-	-	-
L2.50	#28		TENDON FREE WATER	AUG	-	-	-	-	-	-	-	-
CC	CONTAINMENT			OWN	-	-	-	-	-	-	-	-
				PRE	-	-	-	-	-	-	-	-
L-B	I956029			ISI	-	-	-	-	-	-	-	-
L2.50	#29		TENDON FREE WATER	AUG	-	-	-	-	-	-	-	-
CC	CONTAINMENT			OWN	-	-	-	-	-	-	-	-
				PRE	-	-	-	-	-	-	-	-
L-B	I956030	ISI/VT/FT		ISI	-	-	-	-	-	s	-	-
L2.50	#30		TENDON FREE WATER	AUG	-	-	-	-	-	-	-	-
CC	CONTAINMENT			OWN	-	-	-	-	-	-	-	-
				PRE	-	-	-	-	-	-	-	-

Category, ItemNO, Class	Summary / CompID / System	Scope / Method / Procedure	Iso No. Comp. Desc. Code Case		Period 1 97	Period 1 99	Period 1 00	Period 2 02	Period 2 03	Period 2 05	Period 3 06	Period 3 08
L-B	I956031			ISI	-	-	-	-	-	-	-	-
L2.50	#31		TENDON FREE WATER	AUG	-	-	-	-	-	-	-	-
CC	CONTAINMENT			OWN	-	-	-	-	-	-	-	-
				PRE	-	-	-	-	-	-	-	-
L-B	I956032	ISI/VT/FT		ISI	-	-	-	-	-	s	-	-
L2.50	#32		TENDON FREE WATER	AUG	-	-	-	-	-	-	-	-
CC	CONTAINMENT			OWN	-	-	-	-	-	-	-	-
				PRE	-	-	-	-	-	-	-	-
L-B	I956033	ISI/VT/FT		ISI	-	-	-	-	-	s	-	-
L2.50	#33		TENDON FREE WATER	AUG	-	-	-	-	-	-	-	-
CC	CONTAINMENT			OWN	-	-	-	-	-	-	-	-
				PRE	-	-	-	-	-	-	-	-
L-B	I956034	ISI/VT/FT		ISI	-	-	-	-	-	s	-	-
L2.50	#34		TENDON FREE WATER	AUG	-	-	-	-	-	-	-	-
CC	CONTAINMENT			OWN	-	-	-	-	-	-	-	-
				PRE	-	-	-	-	-	-	-	-
L-B	I956035	ISI/VT/FT		ISI	-	-	-	-	-	s	-	-
L2.50	#35		TENDON FREE WATER	AUG	-	-	-	-	-	-	-	-
CC	CONTAINMENT			OWN	-	-	-	-	-	-	-	-
				PRE	-	-	-	-	-	-	-	-
L-B	I956036	ISI/VT/FT		ISI	-	-	-	-	-	s	-	-
L2.50	#36		TENDON FREE WATER	AUG	-	-	-	-	-	-	-	-
CC	CONTAINMENT			OWN	-	-	-	-	-	-	-	-
				PRE	-	-	-	-	-	-	-	-
L-B	I956037	ISI/VT/FT		ISI	-	-	-	-	-	s	-	-
L2.50	#37		TENDON FREE WATER	AUG	-	-	-	-	-	-	-	-
CC	CONTAINMENT			OWN	-	-	-	-	-	-	-	-
				PRE	-	-	-	-	-	-	-	-
L-B	I956038	ISI/VT/FT		ISI	-	-	-	-	-	s	-	-
L2.50	#38		TENDON FREE WATER	AUG	-	-	-	-	-	-	-	-
CC	CONTAINMENT			OWN	-	-	-	-	-	-	-	-
				PRE	-	-	-	-	-	-	-	-
L-B	I956039	ISI/VT/FT		ISI	-	-	-	-	-	s	-	-
L2.50	#39		TENDON FREE WATER	AUG	-	-	-	-	-	-	-	-
CC	CONTAINMENT			OWN	-	-	-	-	-	-	-	-
				PRE	-	-	-	-	-	-	-	-
L-B	I956040			ISI	-	-	-	-	-	-	-	-
L2.50	#40		TENDON FREE WATER	AUG	-	-	-	-	-	-	-	-
CC	CONTAINMENT			OWN	-	-	-	-	-	-	-	-
				PRE	-	-	-	-	-	-	-	-

Category, ItemNO, Class	Summary / CompID / System	Scope / Method / Procedure	Iso No. Comp. Desc. Code Case		Period 1 97	Period 1 99	Period 1 00	Period 2 02	Period 2 03	Period 2 05	Period 3 06	Period 3 08
L-B	I956041			ISI	-	-	-	-	-	-	-	-
L2.50	#41		TENDON FREE WATER	AUG	-	-	-	-	-	-	-	-
CC	CONTAINMENT			OWN	-	-	-	-	-	-	-	-
				PRE	-	-	-	-	-	-	-	-
L-B	I956042			ISI	-	-	-	-	-	-	-	-
L2.50	#42		TENDON FREE WATER	AUG	-	-	-	-	-	-	-	-
CC	CONTAINMENT			OWN	-	-	-	-	-	-	-	-
				PRE	-	-	-	-	-	-	-	-
L-B	I956043			ISI	-	-	-	-	-	-	-	-
L2.50	#43		TENDON FREE WATER	AUG	-	-	-	-	-	-	-	-
CC	CONTAINMENT			OWN	-	-	-	-	-	-	-	-
				PRE	-	-	-	-	-	-	-	-
L-B	I956044			ISI	-	-	-	-	-	-	-	-
L2.50	#44		TENDON FREE WATER	AUG	-	-	-	-	-	-	-	-
CC	CONTAINMENT			OWN	-	-	-	-	-	-	-	-
				PRE	-	-	-	-	-	-	-	-
L-B	I956045			ISI	-	-	-	-	-	-	-	-
L2.50	#45		TENDON FREE WATER	AUG	-	-	-	-	-	-	-	-
CC	CONTAINMENT			OWN	-	-	-	-	-	-	-	-
				PRE	-	-	-	-	-	-	-	-
L-B	I956046			ISI	-	-	-	-	-	-	-	-
L2.50	#46		TENDON FREE WATER	AUG	-	-	-	-	-	-	-	-
CC	CONTAINMENT			OWN	-	-	-	-	-	-	-	-
				PRE	-	-	-	-	-	-	-	-
L-B	I956047			ISI	-	-	-	-	-	-	-	-
L2.50	#47		TENDON FREE WATER	AUG	-	-	-	-	-	-	-	-
CC	CONTAINMENT			OWN	-	-	-	-	-	-	-	-
				PRE	-	-	-	-	-	-	-	-
L-B	I956048			ISI	-	-	-	-	-	-	-	-
L2.50	#48		TENDON FREE WATER	AUG	-	-	-	-	-	-	-	-
CC	CONTAINMENT			OWN	-	-	-	-	-	-	-	-
				PRE	-	-	-	-	-	-	-	-
L-B	I956049			ISI	-	-	-	-	-	-	-	-
L2.50	#49		TENDON FREE WATER	AUG	-	-	-	-	-	-	-	-
CC	CONTAINMENT			OWN	-	-	-	-	-	-	-	-
				PRE	-	-	-	-	-	-	-	-
L-B	I956050			ISI	-	-	-	-	-	-	-	-
L2.50	#50		TENDON FREE WATER	AUG	-	-	-	-	-	-	-	-
CC	CONTAINMENT			OWN	-	-	-	-	-	-	-	-
				PRE	-	-	-	-	-	-	-	-

Category, ItemNO, Class	Summary / CompID / System	Scope / Method / Procedure	Iso No. Comp. Desc. Code Case		Period 1 97	Period 1 99	Period 1 00	Period 2 02	Period 2 03	Period 2 05	Period 3 06	Period 3 08
L-B	I956051			ISI	-	-	-	-	-	-	-	-
L2.50	#51		TENDON FREE WATER	AUG	-	-	-	-	-	-	-	-
CC	CONTAINMENT			OWN	-	-	-	-	-	-	-	-
				PRE	-	-	-	-	-	-	-	-
L-B	I956052			ISI	-	-	-	-	-	-	-	-
L2.50	#52		TENDON FREE WATER	AUG	-	-	-	-	-	-	-	-
CC	CONTAINMENT			OWN	-	-	-	-	-	-	-	-
				PRE	-	-	-	-	-	-	-	-
L-B	I956053			ISI	-	-	-	-	-	-	-	-
L2.50	#53		TENDON FREE WATER	AUG	-	-	-	-	-	-	-	-
CC	CONTAINMENT			OWN	-	-	-	-	-	-	-	-
				PRE	-	-	-	-	-	-	-	-
L-B	I956054			ISI	-	-	-	-	-	-	-	-
L2.50	#54		TENDON FREE WATER	AUG	-	-	-	-	-	-	-	-
CC	CONTAINMENT			OWN	-	-	-	-	-	-	-	-
				PRE	-	-	-	-	-	-	-	-
L-B	I956055			ISI	-	-	-	-	-	-	-	-
L2.50	#55		TENDON FREE WATER	AUG	-	-	-	-	-	-	-	-
CC	CONTAINMENT			OWN	-	-	-	-	-	-	-	-
				PRE	-	-	-	-	-	-	-	-
L-B	I956056	ISI/VT/FT		ISI	-	-	-	-	-	s	-	-
L2.50	#56		TENDON FREE WATER	AUG	-	-	-	-	-	-	-	-
CC	CONTAINMENT			OWN	-	-	-	-	-	-	-	-
				PRE	-	-	-	-	-	-	-	-
L-B	I956057	ISI/VT/FT		ISI	-	-	r	c	-	-	-	-
L2.50	#57		TENDON FREE WATER	AUG	-	-	-	-	-	-	-	-
CC	CONTAINMENT			OWN	-	-	-	-	-	-	-	-
				PRE	-	-	-	-	-	-	-	-
L-B	I956058	ISI/VT/FT		ISI	-	-	-	-	-	s	-	-
L2.50	#58		TENDON FREE WATER	AUG	-	-	-	-	-	-	-	-
CC	CONTAINMENT			OWN	-	-	-	-	-	-	-	-
				PRE	-	-	-	-	-	-	-	-
L-B	I956059			ISI	-	-	-	-	-	-	-	-
L2.50	#59		TENDON FREE WATER	AUG	-	-	-	-	-	-	-	-
CC	CONTAINMENT			OWN	-	-	-	-	-	-	-	-
				PRE	-	-	-	-	-	-	-	-
L-B	I956060			ISI	-	-	-	-	-	-	-	-
L2.50	#60		TENDON FREE WATER	AUG	-	-	-	-	-	-	-	-
CC	CONTAINMENT			OWN	-	-	-	-	-	-	-	-
				PRE	-	-	-	-	-	-	-	-

Category, ItemNO, Class	Summary / CompID / System	Scope / Method / Procedure	Iso No. Comp. Desc. Code Case		Period 1 97	Period 1 99	Period 1 00	Period 2 02	Period 2 03	Period 2 05	Period 3 06	Period 3 08
L-B	I956061			ISI	-	-	-	-	-	-	-	-
L2.50	#61		TENDON FREE WATER	AUG	-	-	-	-	-	-	-	-
CC	CONTAINMENT			OWN	-	-	-	-	-	-	-	-
				PRE	-	-	-	-	-	-	-	-
L-B	I956062			ISI	-	-	-	-	-	-	-	-
L2.50	#62		TENDON FREE WATER	AUG	-	-	-	-	-	-	-	-
CC	CONTAINMENT			OWN	-	-	-	-	-	-	-	-
				PRE	-	-	-	-	-	-	-	-
L-B	I956063			ISI	-	-	-	-	-	-	-	-
L2.50	#63		TENDON FREE WATER	AUG	-	-	-	-	-	-	-	-
CC	CONTAINMENT			OWN	-	-	-	-	-	-	-	-
				PRE	-	-	-	-	-	-	-	-
L-B	I956064			ISI	-	-	-	-	-	-	-	-
L2.50	#64		TENDON FREE WATER	AUG	-	-	-	-	-	-	-	-
CC	CONTAINMENT			OWN	-	-	-	-	-	-	-	-
				PRE	-	-	-	-	-	-	-	-
L-B	I956065			ISI	-	-	-	-	-	-	-	-
L2.50	#65		TENDON FREE WATER	AUG	-	-	-	-	-	-	-	-
CC	CONTAINMENT			OWN	-	-	-	-	-	-	-	-
				PRE	-	-	-	-	-	-	-	-
L-B	I956066	ISI/VT/FT		ISI	-	-	r	c	-	-	-	-
L2.50	#66		TENDON FREE WATER	AUG	-	-	-	-	-	-	-	-
CC	CONTAINMENT			OWN	-	-	-	-	-	-	-	-
				PRE	-	-	-	-	-	-	-	-
L-B	I956067			ISI	-	-	-	-	-	-	-	-
L2.50	#67		TENDON FREE WATER	AUG	-	-	-	-	-	-	-	-
CC	CONTAINMENT			OWN	-	-	-	-	-	-	-	-
				PRE	-	-	-	-	-	-	-	-
L-B	I956068			ISI	-	-	-	-	-	-	-	-
L2.50	#68		TENDON FREE WATER	AUG	-	-	-	-	-	-	-	-
CC	CONTAINMENT			OWN	-	-	-	-	-	-	-	-
				PRE	-	-	-	-	-	-	-	-
L-B	I956069			ISI	-	-	-	-	-	-	-	-
L2.50	#69		TENDON FREE WATER	AUG	-	-	-	-	-	-	-	-
CC	CONTAINMENT			OWN	-	-	-	-	-	-	-	-
				PRE	-	-	-	-	-	-	-	-
L-B	I956070			ISI	-	-	-	-	-	-	-	-
L2.50	#70		TENDON FREE WATER	AUG	-	-	-	-	-	-	-	-
CC	CONTAINMENT			OWN	-	-	-	-	-	-	-	-
				PRE	-	-	-	-	-	-	-	-

Category, ItemNO, Class	Summary / CompID / System	Scope / Method / Procedure	Iso No. Comp. Desc. Code Case		Period 1 97	Period 1 99	Period 1 00	Period 2 02	Period 2 03	Period 2 05	Period 3 06	Period 3 08
L-B	I956071	ISI/VT/FT		ISI	-	-	-	-	-	s	-	-
L2.50	#71		TENDON FREE WATER	AUG	-	-	-	-	-	-	-	-
CC	CONTAINMENT			OWN	-	-	-	-	-	-	-	-
				PRE	-	-	-	-	-	-	-	-
L-B	I956072	ISI/VT/FT		ISI	-	-	-	-	-	s	-	-
L2.50	#72		TENDON FREE WATER	AUG	-	-	-	-	-	-	-	-
CC	CONTAINMENT			OWN	-	-	-	-	-	-	-	-
				PRE	-	-	-	-	-	-	-	-
L-B	I956073	ISI/VT/FT		ISI	-	-	-	-	-	s	-	-
L2.50	#73		TENDON FREE WATER	AUG	-	-	-	-	-	-	-	-
CC	CONTAINMENT			OWN	-	-	-	-	-	-	-	-
				PRE	-	-	-	-	-	-	-	-
L-B	I956074			ISI	-	-	-	-	-	-	-	-
L2.50	#74		TENDON FREE WATER	AUG	-	-	-	-	-	-	-	-
CC	CONTAINMENT			OWN	-	-	-	-	-	-	-	-
				PRE	-	-	-	-	-	-	-	-
L-B	I956075			ISI	-	-	-	-	-	-	-	-
L2.50	#75		TENDON FREE WATER	AUG	-	-	-	-	-	-	-	-
CC	CONTAINMENT			OWN	-	-	-	-	-	-	-	-
				PRE	-	-	-	-	-	-	-	-
L-B	I956076			ISI	-	-	-	-	-	-	-	-
L2.50	#76		TENDON FREE WATER	AUG	-	-	-	-	-	-	-	-
CC	CONTAINMENT			OWN	-	-	-	-	-	-	-	-
				PRE	-	-	-	-	-	-	-	-
L-B	I956077	ISI/VT/FT		ISI	-	-	r	c	-	-	-	-
L2.50	#77		TENDON FREE WATER	AUG	-	-	-	-	-	-	-	-
CC	CONTAINMENT			OWN	-	-	-	-	-	-	-	-
				PRE	-	-	-	-	-	-	-	-
L-B	I956078			ISI	-	-	-	-	-	-	-	-
L2.50	#78		TENDON FREE WATER	AUG	-	-	-	-	-	-	-	-
CC	CONTAINMENT			OWN	-	-	-	-	-	-	-	-
				PRE	-	-	-	-	-	-	-	-
L-B	I956079			ISI	-	-	-	-	-	-	-	-
L2.50	#79		TENDON FREE WATER	AUG	-	-	-	-	-	-	-	-
CC	CONTAINMENT			OWN	-	-	-	-	-	-	-	-
				PRE	-	-	-	-	-	-	-	-
L-B	I956080			ISI	-	-	-	-	-	-	-	-
L2.50	#80		TENDON FREE WATER	AUG	-	-	-	-	-	-	-	-
CC	CONTAINMENT			OWN	-	-	-	-	-	-	-	-
				PRE	-	-	-	-	-	-	-	-

Category, ItemNO, Class	Summary / CompID / System	Scope / Method / Procedure	Iso No. Comp. Desc. Code Case		Period 1 97	Period 1 99	Period 1 00	Period 2 02	Period 2 03	Period 2 05	Period 3 06	Period 3 08
L-B	I956081			ISI	-	-	-	-	-	-	-	-
L2.50	#81		TENDON FREE WATER	AUG	-	-	-	-	-	-	-	-
CC	CONTAINMENT			OWN	-	-	-	-	-	-	-	-
				PRE	-	-	-	-	-	-	-	-
L-B	I956082			ISI	-	-	-	-	-	-	-	-
L2.50	#82		TENDON FREE WATER	AUG	-	-	-	-	-	-	-	-
CC	CONTAINMENT			OWN	-	-	-	-	-	-	-	-
				PRE	-	-	-	-	-	-	-	-
L-B	I956083			ISI	-	-	-	-	-	-	-	-
L2.50	#83		TENDON FREE WATER	AUG	-	-	-	-	-	-	-	-
CC	CONTAINMENT			OWN	-	-	-	-	-	-	-	-
				PRE	-	-	-	-	-	-	-	-
L-B	I956084			ISI	-	-	-	-	-	-	-	-
L2.50	#84		TENDON FREE WATER	AUG	-	-	-	-	-	-	-	-
CC	CONTAINMENT			OWN	-	-	-	-	-	-	-	-
				PRE	-	-	-	-	-	-	-	-
L-B	I956085			ISI	-	-	-	-	-	-	-	-
L2.50	#85		TENDON FREE WATER	AUG	-	-	-	-	-	-	-	-
CC	CONTAINMENT			OWN	-	-	-	-	-	-	-	-
				PRE	-	-	-	-	-	-	-	-
L-B	I956086			ISI	-	-	-	-	-	-	-	-
L2.50	#86		TENDON FREE WATER	AUG	-	-	-	-	-	-	-	-
CC	CONTAINMENT			OWN	-	-	-	-	-	-	-	-
				PRE	-	-	-	-	-	-	-	-
L-B	I956087			ISI	-	-	-	-	-	-	-	-
L2.50	#87		TENDON FREE WATER	AUG	-	-	-	-	-	-	-	-
CC	CONTAINMENT			OWN	-	-	-	-	-	-	-	-
				PRE	-	-	-	-	-	-	-	-
L-B	I956088			ISI	-	-	-	-	-	-	-	-
L2.50	#88		TENDON FREE WATER	AUG	-	-	-	-	-	-	-	-
CC	CONTAINMENT			OWN	-	-	-	-	-	-	-	-
				PRE	-	-	-	-	-	-	-	-
L-B	I956089			ISI	-	-	-	-	-	-	-	-
L2.50	#89		TENDON FREE WATER	AUG	-	-	-	-	-	-	-	-
CC	CONTAINMENT			OWN	-	-	-	-	-	-	-	-
				PRE	-	-	-	-	-	-	-	-
L-B	I956090			ISI	-	-	-	-	-	-	-	-
L2.50	#90		TENDON FREE WATER	AUG	-	-	-	-	-	-	-	-
CC	CONTAINMENT			OWN	-	-	-	-	-	-	-	-
				PRE	-	-	-	-	-	-	-	-

Category, ItemNO, Class	Summary / CompID / System	Scope / Method / Procedure	Iso No. Comp. Desc. Code Case		Period 1 97	Period 1 99	Period 1 00	Period 2 02	Period 2 03	Period 2 05	Period 3 06	Period 3 08
L-B	I956091			ISI	-	-	-	-	-	-	-	-
L2.50	#91		TENDON FREE WATER	AUG	-	-	-	-	-	-	-	-
CC	CONTAINMENT			OWN	-	-	-	-	-	-	-	-
				PRE	-	-	-	-	-	-	-	-
L-B	I956092			ISI	-	-	-	-	-	-	-	-
L2.50	#92		TENDON FREE WATER	AUG	-	-	-	-	-	-	-	-
CC	CONTAINMENT			OWN	-	-	-	-	-	-	-	-
				PRE	-	-	-	-	-	-	-	-
L-B	I956093			ISI	-	-	-	-	-	-	-	-
L2.50	#93		TENDON FREE WATER	AUG	-	-	-	-	-	-	-	-
CC	CONTAINMENT			OWN	-	-	-	-	-	-	-	-
				PRE	-	-	-	-	-	-	-	-
L-B	I956094			ISI	-	-	-	-	-	-	-	-
L2.50	#94		TENDON FREE WATER	AUG	-	-	-	-	-	-	-	-
CC	CONTAINMENT			OWN	-	-	-	-	-	-	-	-
				PRE	-	-	-	-	-	-	-	-
L-B	I956095			ISI	-	-	-	-	-	-	-	-
L2.50	#95		TENDON FREE WATER	AUG	-	-	-	-	-	-	-	-
CC	CONTAINMENT			OWN	-	-	-	-	-	-	-	-
				PRE	-	-	-	-	-	-	-	-
L-B	I956096			ISI	-	-	-	-	-	-	-	-
L2.50	#96		TENDON FREE WATER	AUG	-	-	-	-	-	-	-	-
CC	CONTAINMENT			OWN	-	-	-	-	-	-	-	-
				PRE	-	-	-	-	-	-	-	-
L-B	I956097			ISI	-	-	-	-	-	-	-	-
L2.50	#97		TENDON FREE WATER	AUG	-	-	-	-	-	-	-	-
CC	CONTAINMENT			OWN	-	-	-	-	-	-	-	-
				PRE	-	-	-	-	-	-	-	-
L-B	I956098			ISI	-	-	-	-	-	-	-	-
L2.50	#98		TENDON FREE WATER	AUG	-	-	-	-	-	-	-	-
CC	CONTAINMENT			OWN	-	-	-	-	-	-	-	-
				PRE	-	-	-	-	-	-	-	-
L-B	I956099			ISI	-	-	-	-	-	-	-	-
L2.50	#99		TENDON FREE WATER	AUG	-	-	-	-	-	-	-	-
CC	CONTAINMENT			OWN	-	-	-	-	-	-	-	-
				PRE	-	-	-	-	-	-	-	-
L-B	I956100			ISI	-	-	-	-	-	-	-	-
L2.50	#100		TENDON FREE WATER	AUG	-	-	-	-	-	-	-	-
CC	CONTAINMENT			OWN	-	-	-	-	-	-	-	-
				PRE	-	-	-	-	-	-	-	-

Category, ItemNO, Class	Summary / CompID / System	Scope / Method / Procedure	Iso No. Comp. Desc. Code Case		Period 1 97	Period 1 99	Period 1 00	Period 2 02	Period 2 03	Period 2 05	Period 3 06	Period 3 08
L-B	I956101			ISI	-	-	-	-	-	-	-	-
L2.50	#101		TENDON FREE WATER	AUG	-	-	-	-	-	-	-	-
CC	CONTAINMENT			OWN	-	-	-	-	-	-	-	-
				PRE	-	-	-	-	-	-	-	-
L-B	I956102			ISI	-	-	-	-	-	-	-	-
L2.50	#102		TENDON FREE WATER	AUG	-	-	-	-	-	-	-	-
CC	CONTAINMENT			OWN	-	-	-	-	-	-	-	-
				PRE	-	-	-	-	-	-	-	-
L-B	I956103			ISI	-	-	-	-	-	-	-	-
L2.50	#103		TENDON FREE WATER	AUG	-	-	-	-	-	-	-	-
CC	CONTAINMENT			OWN	-	-	-	-	-	-	-	-
				PRE	-	-	-	-	-	-	-	-
L-B	I956104			ISI	-	-	-	-	-	-	-	-
L2.50	#104		TENDON FREE WATER	AUG	-	-	-	-	-	-	-	-
CC	CONTAINMENT			OWN	-	-	-	-	-	-	-	-
				PRE	-	-	-	-	-	-	-	-
L-B	I956105	ISI/VT/FT		ISI	-	-	r	c	-	-	-	-
L2.50	#105		TENDON FREE WATER	AUG	-	-	-	-	-	-	-	-
CC	CONTAINMENT			OWN	-	-	-	-	-	-	-	-
				PRE	-	-	-	-	-	-	-	-
L-B	I956106			ISI	-	-	-	-	-	-	-	-
L2.50	#106		TENDON FREE WATER	AUG	-	-	-	-	-	-	-	-
CC	CONTAINMENT			OWN	-	-	-	-	-	-	-	-
				PRE	-	-	-	-	-	-	-	-
L-B	I956107			ISI	-	-	-	-	-	-	-	-
L2.50	#107		TENDON FREE WATER	AUG	-	-	-	-	-	-	-	-
CC	CONTAINMENT			OWN	-	-	-	-	-	-	-	-
				PRE	-	-	-	-	-	-	-	-
L-B	I956108			ISI	-	-	-	-	-	-	-	-
L2.50	#108		TENDON FREE WATER	AUG	-	-	-	-	-	-	-	-
CC	CONTAINMENT			OWN	-	-	-	-	-	-	-	-
				PRE	-	-	-	-	-	-	-	-
L-B	I956109			ISI	-	-	-	-	-	-	-	-
L2.50	#109		TENDON FREE WATER	AUG	-	-	-	-	-	-	-	-
CC	CONTAINMENT			OWN	-	-	-	-	-	-	-	-
				PRE	-	-	-	-	-	-	-	-
L-B	I956110	ISI/VT/FT		ISI	-	-	r	c	-	-	-	-
L2.50	#110		TENDON FREE WATER	AUG	-	-	-	-	-	-	-	-
CC	CONTAINMENT			OWN	-	-	-	-	-	-	-	-
				PRE	-	-	-	-	-	-	-	-

Category, ItemNO, Class	Summary / CompID / System	Scope / Method / Procedure	Iso No. Comp. Desc. Code Case		Period 1 97	Period 1 99	Period 1 00	Period 2 02	Period 2 03	Period 2 05	Period 3 06	Period 3 08
L-B	I956111	ISI/VT/FT		ISI	-	-	-	-	-	s	-	-
L2.50	#111		TENDON FREE WATER	AUG	-	-	-	-	-	-	-	-
CC	CONTAINMENT			OWN	-	-	-	-	-	-	-	-
				PRE	-	-	-	-	-	-	-	-
L-B	I956112	ISI/VT/FT		ISI	-	-	r	c	-	b	-	-
L2.50	#112	ISI/VT/FT	TENDON FREE WATER	AUG	-	-	-	-	-	-	-	-
CC	CONTAINMENT			OWN	-	-	-	-	-	-	-	-
				PRE	-	-	-	-	-	-	-	-
L-B	I956113	ISI/VT/FT		ISI	-	-	-	-	-	s	-	-
L2.50	#113		TENDON FREE WATER	AUG	-	-	-	-	-	-	-	-
CC	CONTAINMENT			OWN	-	-	-	-	-	-	-	-
				PRE	-	-	-	-	-	-	-	-
L-B	I956114	ISI/VT/FT		ISI	-	-	-	-	-	s	-	-
L2.50	#114		TENDON FREE WATER	AUG	-	-	-	-	-	-	-	-
CC	CONTAINMENT			OWN	-	-	-	-	-	-	-	-
				PRE	-	-	-	-	-	-	-	-
L-B	I956115	ISI/VT/FT		ISI	-	-	-	-	-	s	-	-
L2.50	#115		TENDON FREE WATER	AUG	-	-	-	-	-	-	-	-
CC	CONTAINMENT			OWN	-	-	-	-	-	-	-	-
				PRE	-	-	-	-	-	-	-	-
L-B	I956116	ISI/VT/FT		ISI	-	-	-	-	-	s	-	-
L2.50	#116		TENDON FREE WATER	AUG	-	-	-	-	-	-	-	-
CC	CONTAINMENT			OWN	-	-	-	-	-	-	-	-
				PRE	-	-	-	-	-	-	-	-
L-B	I956117	ISI/VT/FT		ISI	-	-	-	-	-	s	-	-
L2.50	#117		TENDON FREE WATER	AUG	-	-	-	-	-	-	-	-
CC	CONTAINMENT			OWN	-	-	-	-	-	-	-	-
				PRE	-	-	-	-	-	-	-	-
L-B	I956118	ISI/VT/FT		ISI	-	-	-	-	-	s	-	-
L2.50	#118		TENDON FREE WATER	AUG	-	-	-	-	-	-	-	-
CC	CONTAINMENT			OWN	-	-	-	-	-	-	-	-
				PRE	-	-	-	-	-	-	-	-
L-B	I956119	ISI/VT/FT		ISI	-	-	-	-	-	s	-	-
L2.50	#119		TENDON FREE WATER	AUG	-	-	-	-	-	-	-	-
CC	CONTAINMENT			OWN	-	-	-	-	-	-	-	-
				PRE	-	-	-	-	-	-	-	-
L-B	I956120	ISI/VT/FT		ISI	-	-	-	-	-	s	-	-
L2.50	#120		TENDON FREE WATER	AUG	-	-	-	-	-	-	-	-
CC	CONTAINMENT			OWN	-	-	-	-	-	-	-	-
				PRE	-	-	-	-	-	-	-	-

Category, ItemNO, Class	Summary / CompID / System	Scope / Method / Procedure	Iso No. Comp. Desc. Code Case		Period 1 97	Period 1 99	Period 1 00	Period 2 02	Period 2 03	Period 2 05	Period 3 06	Period 3 08
L-B	I956121	ISI/VT/FT		ISI	-	-	-	-	-	s	-	-
L2.50	#121		TENDON FREE WATER	AUG	-	-	-	-	-	-	-	-
CC	CONTAINMENT			OWN	-	-	-	-	-	-	-	-
				PRE	-	-	-	-	-	-	-	-
L-B	I956122	ISI/VT/FT		ISI	-	-	r	c	-	b	-	-
L2.50	#122	ISI/VT/FT	TENDON FREE WATER	AUG	-	-	-	-	-	-	-	-
CC	CONTAINMENT			OWN	-	-	-	-	-	-	-	-
				PRE	-	-	-	-	-	-	-	-
L-B	I956123			ISI	-	-	-	-	-	-	-	-
L2.50	#123		TENDON FREE WATER	AUG	-	-	-	-	-	-	-	-
CC	CONTAINMENT			OWN	-	-	-	-	-	-	-	-
				PRE	-	-	-	-	-	-	-	-
L-B	I956124			ISI	-	-	-	-	-	-	-	-
L2.50	#124		TENDON FREE WATER	AUG	-	-	-	-	-	-	-	-
CC	CONTAINMENT			OWN	-	-	-	-	-	-	-	-
				PRE	-	-	-	-	-	-	-	-
L-B	I956125			ISI	-	-	-	-	-	-	-	-
L2.50	#125		TENDON FREE WATER	AUG	-	-	-	-	-	-	-	-
CC	CONTAINMENT			OWN	-	-	-	-	-	-	-	-
				PRE	-	-	-	-	-	-	-	-
L-B	I956126	ISI/VT/FT		ISI	-	-	-	-	-	s	-	-
L2.50	#126		TENDON FREE WATER	AUG	-	-	-	-	-	-	-	-
CC	CONTAINMENT			OWN	-	-	-	-	-	-	-	-
				PRE	-	-	-	-	-	-	-	-
L-B	I956127			ISI	-	-	-	-	-	-	-	-
L2.50	#127		TENDON FREE WATER	AUG	-	-	-	-	-	-	-	-
CC	CONTAINMENT			OWN	-	-	-	-	-	-	-	-
				PRE	-	-	-	-	-	-	-	-
L-B	I956128	ISI/VT/FT		ISI	-	-	r	c	-	-	-	-
L2.50	#128		TENDON FREE WATER	AUG	-	-	-	-	-	-	-	-
CC	CONTAINMENT			OWN	-	-	-	-	-	-	-	-
				PRE	-	-	-	-	-	-	-	-
L-B	I956129	ISI/VT/FT		ISI	-	-	r	c	-	-	-	-
L2.50	#129		TENDON FREE WATER	AUG	-	-	-	-	-	-	-	-
CC	CONTAINMENT			OWN	-	-	-	-	-	-	-	-
				PRE	-	-	-	-	-	-	-	-
L-B	I956130			ISI	-	-	-	-	-	-	-	-
L2.50	#130		TENDON FREE WATER	AUG	-	-	-	-	-	-	-	-
CC	CONTAINMENT			OWN	-	-	-	-	-	-	-	-
				PRE	-	-	-	-	-	-	-	-

Category, ItemNO, Class	Summary / CompID / System	Scope / Method / Procedure	Iso No. Comp. Desc. Code Case		Period 1 97	Period 1 99	Period 1 00	Period 2 02	Period 2 03	Period 2 05	Period 3 06	Period 3 08
L-B	I956131			ISI	-	-	-	-	-	-	-	-
L2.50	#131		TENDON FREE WATER	AUG	-	-	-	-	-	-	-	-
CC	CONTAINMENT			OWN	-	-	-	-	-	-	-	-
				PRE	-	-	-	-	-	-	-	-
L-B	I956132	ISI/VT/FT		ISI	-	-	-	-	-	s	-	-
L2.50	#132		TENDON FREE WATER	AUG	-	-	-	-	-	-	-	-
CC	CONTAINMENT			OWN	-	-	-	-	-	-	-	-
				PRE	-	-	-	-	-	-	-	-
L-B	I956133			ISI	-	-	-	-	-	-	-	-
L2.50	#133		TENDON FREE WATER	AUG	-	-	-	-	-	-	-	-
CC	CONTAINMENT			OWN	-	-	-	-	-	-	-	-
				PRE	-	-	-	-	-	-	-	-
L-B	I956134			ISI	-	-	-	-	-	-	-	-
L2.50	#134		TENDON FREE WATER	AUG	-	-	-	-	-	-	-	-
CC	CONTAINMENT			OWN	-	-	-	-	-	-	-	-
				PRE	-	-	-	-	-	-	-	-
L-B	I956135			ISI	-	-	-	-	-	-	-	-
L2.50	#135		TENDON FREE WATER	AUG	-	-	-	-	-	-	-	-
CC	CONTAINMENT			OWN	-	-	-	-	-	-	-	-
				PRE	-	-	-	-	-	-	-	-
L-B	I956136			ISI	-	-	-	-	-	-	-	-
L2.50	#136		TENDON FREE WATER	AUG	-	-	-	-	-	-	-	-
CC	CONTAINMENT			OWN	-	-	-	-	-	-	-	-
				PRE	-	-	-	-	-	-	-	-
L-B	I956137			ISI	-	-	-	-	-	-	-	-
L2.50	#137		TENDON FREE WATER	AUG	-	-	-	-	-	-	-	-
CC	CONTAINMENT			OWN	-	-	-	-	-	-	-	-
				PRE	-	-	-	-	-	-	-	-
L-B	I956138			ISI	-	-	-	-	-	-	-	-
L2.50	#138		TENDON FREE WATER	AUG	-	-	-	-	-	-	-	-
CC	CONTAINMENT			OWN	-	-	-	-	-	-	-	-
				PRE	-	-	-	-	-	-	-	-
L-B	I956139			ISI	-	-	-	-	-	-	-	-
L2.50	#139		TENDON FREE WATER	AUG	-	-	-	-	-	-	-	-
CC	CONTAINMENT			OWN	-	-	-	-	-	-	-	-
				PRE	-	-	-	-	-	-	-	-
L-B	I956140			ISI	-	-	-	-	-	-	-	-
L2.50	#140		TENDON FREE WATER	AUG	-	-	-	-	-	-	-	-
CC	CONTAINMENT			OWN	-	-	-	-	-	-	-	-
				PRE	-	-	-	-	-	-	-	-

Category, ItemNO, Class	Summary / CompID / System	Scope / Method / Procedure	Iso No. Comp. Desc. Code Case		Period 1 97	Period 1 99	Period 1 00	Period 2 02	Period 2 03	Period 2 05	Period 3 06	Period 3 08
L-B	I956141			ISI	-	-	-	-	-	-	-	-
L2.50	#141		TENDON FREE WATER	AUG	-	-	-	-	-	-	-	-
CC	CONTAINMENT			OWN	-	-	-	-	-	-	-	-
				PRE	-	-	-	-	-	-	-	-
L-B	I956142			ISI	-	-	-	-	-	-	-	-
L2.50	#142		TENDON FREE WATER	AUG	-	-	-	-	-	-	-	-
CC	CONTAINMENT			OWN	-	-	-	-	-	-	-	-
				PRE	-	-	-	-	-	-	-	-
L-B	I956143			ISI	-	-	-	-	-	-	-	-
L2.50	#143		TENDON FREE WATER	AUG	-	-	-	-	-	-	-	-
CC	CONTAINMENT			OWN	-	-	-	-	-	-	-	-
				PRE	-	-	-	-	-	-	-	-
L-B	I956144			ISI	-	-	-	-	-	-	-	-
L2.50	#144		TENDON FREE WATER	AUG	-	-	-	-	-	-	-	-
CC	CONTAINMENT			OWN	-	-	-	-	-	-	-	-
				PRE	-	-	-	-	-	-	-	-
L-B	I956145	ISI/VT/FT		ISI	-	-	-	-	-	s	-	-
L2.50	#145		TENDON FREE WATER	AUG	-	-	-	-	-	-	-	-
CC	CONTAINMENT			OWN	-	-	-	-	-	-	-	-
				PRE	-	-	-	-	-	-	-	-
L-B	I956146			ISI	-	-	-	-	-	-	-	-
L2.50	#146		TENDON FREE WATER	AUG	-	-	-	-	-	-	-	-
CC	CONTAINMENT			OWN	-	-	-	-	-	-	-	-
				PRE	-	-	-	-	-	-	-	-
L-B	I956147			ISI	-	-	-	-	-	-	-	-
L2.50	#147		TENDON FREE WATER	AUG	-	-	-	-	-	-	-	-
CC	CONTAINMENT			OWN	-	-	-	-	-	-	-	-
				PRE	-	-	-	-	-	-	-	-
L-B	I956148			ISI	-	-	-	-	-	-	-	-
L2.50	#148		TENDON FREE WATER	AUG	-	-	-	-	-	-	-	-
CC	CONTAINMENT			OWN	-	-	-	-	-	-	-	-
				PRE	-	-	-	-	-	-	-	-
L-B	I956149			ISI	-	-	-	-	-	-	-	-
L2.50	#149		TENDON FREE WATER	AUG	-	-	-	-	-	-	-	-
CC	CONTAINMENT			OWN	-	-	-	-	-	-	-	-
				PRE	-	-	-	-	-	-	-	-
L-B	I956150			ISI	-	-	-	-	-	-	-	-
L2.50	#150		TENDON FREE WATER	AUG	-	-	-	-	-	-	-	-
CC	CONTAINMENT			OWN	-	-	-	-	-	-	-	-
				PRE	-	-	-	-	-	-	-	-

Category, ItemNO, Class	Summary / CompID / System	Scope / Method / Procedure	Iso No. Comp. Desc. Code Case		Period 1 97	Period 1 99	Period 1 00	Period 2 02	Period 2 03	Period 2 05	Period 3 06	Period 3 08
L-B	I956151			ISI	-	-	-	-	-	-	-	-
L2.50	#151		TENDON FREE WATER	AUG	-	-	-	-	-	-	-	-
CC	CONTAINMENT			OWN	-	-	-	-	-	-	-	-
				PRE	-	-	-	-	-	-	-	-
L-B	I956152	ISI/VT/FT		ISI	-	-	-	-	-	s	-	-
L2.50	#152		TENDON FREE WATER	AUG	-	-	-	-	-	-	-	-
CC	CONTAINMENT			OWN	-	-	-	-	-	-	-	-
				PRE	-	-	-	-	-	-	-	-
L-B	I956153			ISI	-	-	-	-	-	-	-	-
L2.50	#153		TENDON FREE WATER	AUG	-	-	-	-	-	-	-	-
CC	CONTAINMENT			OWN	-	-	-	-	-	-	-	-
				PRE	-	-	-	-	-	-	-	-
L-B	I956154			ISI	-	-	-	-	-	-	-	-
L2.50	#154		TENDON FREE WATER	AUG	-	-	-	-	-	-	-	-
CC	CONTAINMENT			OWN	-	-	-	-	-	-	-	-
				PRE	-	-	-	-	-	-	-	-
L-B	I956155			ISI	-	-	-	-	-	-	-	-
L2.50	#155		TENDON FREE WATER	AUG	-	-	-	-	-	-	-	-
CC	CONTAINMENT			OWN	-	-	-	-	-	-	-	-
				PRE	-	-	-	-	-	-	-	-
L-B	I956156			ISI	-	-	-	-	-	-	-	-
L2.50	#156		TENDON FREE WATER	AUG	-	-	-	-	-	-	-	-
CC	CONTAINMENT			OWN	-	-	-	-	-	-	-	-
				PRE	-	-	-	-	-	-	-	-
L-B	I956157			ISI	-	-	-	-	-	-	-	-
L2.50	#157		TENDON FREE WATER	AUG	-	-	-	-	-	-	-	-
CC	CONTAINMENT			OWN	-	-	-	-	-	-	-	-
				PRE	-	-	-	-	-	-	-	-
L-B	I956158			ISI	-	-	-	-	-	-	-	-
L2.50	#158		TENDON FREE WATER	AUG	-	-	-	-	-	-	-	-
CC	CONTAINMENT			OWN	-	-	-	-	-	-	-	-
				PRE	-	-	-	-	-	-	-	-
L-B	I956159	ISI/VT/FT		ISI	-	-	-	-	-	s	-	-
L2.50	#159		TENDON FREE WATER	AUG	-	-	-	-	-	-	-	-
CC	CONTAINMENT			OWN	-	-	-	-	-	-	-	-
				PRE	-	-	-	-	-	-	-	-
L-B	I956160	ISI/VT/FT		ISI	-	-	r	c	-	-	-	-
L2.50	#160		TENDON FREE WATER	AUG	-	-	-	-	-	-	-	-
CC	CONTAINMENT			OWN	-	-	-	-	-	-	-	-
				PRE	-	-	-	-	-	-	-	-

Category, ItemNO, Class	Summary / CompID / System	Scope / Method / Procedure	Iso No. Comp. Desc. Code Case		Period 1 97	Period 1 99	Period 1 00	Period 2 02	Period 2 03	Period 2 05	Period 3 06	Period 3 08
L-GC	I957001	PSI/VT/VT-113		ISI	-	-	-	-	-	-	-	-
GC-1	#1	AUG/VT/VT-113	TENDON GREASE CAP	AUG	-	-	-	-	-	s	-	-
CC	CONTAINMENT			OWN	-	-	-	-	-	-	-	-
				PRE	-	-	-	c	-	-	-	-
L-GC	I957002	AUG/VT/VT-113		ISI	-	-	-	-	-	-	-	-
GC-1	#2	PSI/VT/VT-113	TENDON GREASE CAP	AUG	-	-	r	c	-	b	-	-
CC	CONTAINMENT	AUG/VT/VT-113		OWN	-	-	-	-	-	-	-	-
				PRE	-	-	-	c	-	-	-	-
L-GC	I957003	PSI/VT/VT-113		ISI	-	-	-	-	-	-	-	-
GC-1	#3	AUG/VT/VT-113	TENDON GREASE CAP	AUG	-	-	-	-	-	s	-	-
CC	CONTAINMENT			OWN	-	-	-	-	-	-	-	-
				PRE	-	-	-	c	-	-	-	-
L-GC	I957004	AUG/VT/VT-113		ISI	-	-	-	-	-	-	-	-
GC-1	#4	PSI/VT/VT-113	TENDON GREASE CAP	AUG	-	-	r	c	-	b	-	-
CC	CONTAINMENT	AUG/VT/VT-113		OWN	-	-	-	-	-	-	-	-
				PRE	-	-	-	c	-	-	-	-
L-GC	I957005	AUG/VT/VT-113		ISI	-	-	-	-	-	-	-	-
GC-1	#5	AUG/VT/VT-113	TENDON GREASE CAP	AUG	-	-	-	-	-	s	-	-
CC	CONTAINMENT			OWN	-	-	-	-	-	-	-	-
				PRE	-	-	-	c	-	-	-	-
L-GC	I957006	PSI/VT/VT-113		ISI	-	-	-	-	-	-	-	-
GC-1	#6	AUG/VT/VT-113	TENDON GREASE CAP	AUG	-	-	-	-	-	s	-	-
CC	CONTAINMENT			OWN	-	-	-	-	-	-	-	-
				PRE	-	-	-	c	-	-	-	-
L-GC	I957007	PSI/VT/VT-113		ISI	-	-	-	-	-	-	-	-
GC-1	#7	AUG/VT/VT-113	TENDON GREASE CAP	AUG	-	-	-	-	-	s	-	-
CC	CONTAINMENT			OWN	-	-	-	-	-	-	-	-
				PRE	-	-	-	c	-	-	-	-
L-GC	I957008	PSI/VT/VT-113		ISI	-	-	-	-	-	-	-	-
GC-1	#8	AUG/VT/VT-113	TENDON GREASE CAP	AUG	-	-	-	-	-	s	-	-
CC	CONTAINMENT			OWN	-	-	-	-	-	-	-	-
				PRE	-	-	-	c	-	-	-	-
L-GC	I957009	AUG/VT/VT-113		ISI	-	-	-	-	-	-	-	-
GC-1	#9	PSI/VT/VT-113	TENDON GREASE CAP	AUG	-	-	r	c	-	b	-	-
CC	CONTAINMENT	AUG/VT/VT-113		OWN	-	-	-	-	-	-	-	-
				PRE	-	-	-	c	-	-	-	-
L-GC	I957010	AUG/VT/VT-113		ISI	-	-	-	-	-	-	-	-
GC-1	#10	PSI/VT/VT-113	TENDON GREASE CAP	AUG	-	-	r	c	-	b	-	-
CC	CONTAINMENT	AUG/VT/VT-113		OWN	-	-	-	-	-	-	-	-
				PRE	-	-	-	c	-	-	-	-

Category, ItemNO, Class	Summary / CompID / System	Scope / Method / Procedure	Iso No. Comp. Desc. Code Case		Period 1			Period 2			Period 3	
					97	99	00	02	03	05	06	08
L-GC	I957011	PSI/VT/VT-113		ISI	-	-	-	-	-	-	-	-
GC-1	#11	AUG/VT/VT-113	TENDON GREASE CAP	AUG	-	-	-	-	-	s	-	-
CC	CONTAINMENT			OWN	-	-	-	-	-	-	-	-
				PRE	-	-	-	c	-	-	-	-
L-GC	I957012	PSI/VT/VT-113		ISI	-	-	-	-	-	-	-	-
GC-1	#12	AUG/VT/VT-113	TENDON GREASE CAP	AUG	-	-	-	-	-	s	-	-
CC	CONTAINMENT			OWN	-	-	-	-	-	-	-	-
				PRE	-	-	-	c	-	-	-	-
L-GC	I957013	PSI/VT/VT-113		ISI	-	-	-	-	-	-	-	-
GC-1	#13	AUG/VT/VT-113	TENDON GREASE CAP	AUG	-	-	-	-	-	s	-	-
CC	CONTAINMENT			OWN	-	-	-	-	-	-	-	-
				PRE	-	-	-	c	-	-	-	-
L-GC	I957014	AUG/VT/VT-113		ISI	-	-	-	-	-	-	-	-
GC-1	#14	AUG/VT/VT-113	TENDON GREASE CAP	AUG	-	-	-	-	-	s	-	-
CC	CONTAINMENT			OWN	-	-	-	-	-	-	-	-
				PRE	-	-	-	c	-	-	-	-
L-GC	I957015	PSI/VT/VT-113		ISI	-	-	-	-	-	-	-	-
GC-1	#15	AUG/VT/VT-113	TENDON GREASE CAP	AUG	-	-	-	-	-	s	-	-
CC	CONTAINMENT			OWN	-	-	-	-	-	-	-	-
				PRE	-	-	-	c	-	-	-	-
L-GC	I957016	AUG/VT/VT-113		ISI	-	-	-	-	-	-	-	-
GC-1	#16	AUG/VT/VT-113	TENDON GREASE CAP	AUG	-	-	-	-	-	s	-	-
CC	CONTAINMENT			OWN	-	-	-	-	-	-	-	-
				PRE	-	-	-	c	-	-	-	-
L-GC	I957017	PSI/VT/VT-113		ISI	-	-	-	-	-	-	-	-
GC-1	#17	AUG/VT/VT-113	TENDON GREASE CAP	AUG	-	-	-	-	-	s	-	-
CC	CONTAINMENT			OWN	-	-	-	-	-	-	-	-
				PRE	-	-	-	c	-	-	-	-
L-GC	I957018	PSI/VT/VT-113		ISI	-	-	-	-	-	-	-	-
GC-1	#18	AUG/VT/VT-113	TENDON GREASE CAP	AUG	-	-	-	-	-	s	-	-
CC	CONTAINMENT			OWN	-	-	-	-	-	-	-	-
				PRE	-	-	-	c	-	-	-	-
L-GC	I957019	PSI/VT/VT-113		ISI	-	-	-	-	-	-	-	-
GC-1	#19	AUG/VT/VT-113	TENDON GREASE CAP	AUG	-	-	-	-	-	s	-	-
CC	CONTAINMENT			OWN	-	-	-	-	-	-	-	-
				PRE	-	-	-	c	-	-	-	-
L-GC	I957020	PSI/VT/VT-113		ISI	-	-	-	-	-	-	-	-
GC-1	#20	AUG/VT/VT-113	TENDON GREASE CAP	AUG	-	-	-	-	-	s	-	-
CC	CONTAINMENT			OWN	-	-	-	-	-	-	-	-
				PRE	-	-	-	c	-	-	-	-

Category, ItemNO, Class	Summary / CompID / System	Scope / Method / Procedure	Iso No. Comp. Desc. Code Case		Period 1 97	Period 1 99	Period 1 00	Period 2 02	Period 2 03	Period 2 05	Period 3 06	Period 3 08
L-GC	I957021	PSI/VT/VT-113		ISI	-	-	-	-	-	-	-	-
GC-1	#21	AUG/VT/VT-113	TENDON GREASE CAP	AUG	-	-	-	-	-	s	-	-
CC	CONTAINMENT			OWN	-	-	-	-	-	-	-	-
				PRE	-	-	-	c	-	-	-	-
L-GC	I957022	PSI/VT/VT-113		ISI	-	-	-	-	-	-	-	-
GC-1	#22	AUG/VT/VT-113	TENDON GREASE CAP	AUG	-	-	-	-	-	s	-	-
CC	CONTAINMENT			OWN	-	-	-	-	-	-	-	-
				PRE	-	-	-	c	-	-	-	-
L-GC	I957023	PSI/VT/VT-113		ISI	-	-	-	-	-	-	-	-
GC-1	#23	AUG/VT/VT-113	TENDON GREASE CAP	AUG	-	-	-	-	-	s	-	-
CC	CONTAINMENT			OWN	-	-	-	-	-	-	-	-
				PRE	-	-	-	c	-	-	-	-
L-GC	I957024	PSI/VT/VT-113		ISI	-	-	-	-	-	-	-	-
GC-1	#24	AUG/VT/VT-113	TENDON GREASE CAP	AUG	-	-	-	-	-	s	-	-
CC	CONTAINMENT			OWN	-	-	-	-	-	-	-	-
				PRE	-	-	-	c	-	-	-	-
L-GC	I957025	PSI/VT/VT-113		ISI	-	-	-	-	-	-	-	-
GC-1	#25	AUG/VT/VT-113	TENDON GREASE CAP	AUG	-	-	-	-	-	s	-	-
CC	CONTAINMENT			OWN	-	-	-	-	-	-	-	-
				PRE	-	-	-	c	-	-	-	-
L-GC	I957026	PSI/VT/VT-113		ISI	-	-	-	-	-	-	-	-
GC-1	#26	AUG/VT/VT-113	TENDON GREASE CAP	AUG	-	-	-	-	-	s	-	-
CC	CONTAINMENT			OWN	-	-	-	-	-	-	-	-
				PRE	-	-	-	c	-	-	-	-
L-GC	I957027	PSI/VT/VT-113		ISI	-	-	-	-	-	-	-	-
GC-1	#27	AUG/VT/VT-113	TENDON GREASE CAP	AUG	-	-	-	-	-	s	-	-
CC	CONTAINMENT			OWN	-	-	-	-	-	-	-	-
				PRE	-	-	-	c	-	-	-	-
L-GC	I957028	PSI/VT/VT-113		ISI	-	-	-	-	-	-	-	-
GC-1	#28	AUG/VT/VT-113	TENDON GREASE CAP	AUG	-	-	-	-	-	s	-	-
CC	CONTAINMENT			OWN	-	-	-	-	-	-	-	-
				PRE	-	-	-	c	-	-	-	-
L-GC	I957029	PSI/VT/VT-113		ISI	-	-	-	-	-	-	-	-
GC-1	#29	AUG/VT/VT-113	TENDON GREASE CAP	AUG	-	-	-	-	-	s	-	-
CC	CONTAINMENT			OWN	-	-	-	-	-	-	-	-
				PRE	-	-	-	c	-	-	-	-
L-GC	I957030	AUG/VT/VT-113		ISI	-	-	-	-	-	-	-	-
GC-1	#30	AUG/VT/VT-113	TENDON GREASE CAP	AUG	-	-	-	-	-	s	-	-
CC	CONTAINMENT			OWN	-	-	-	-	-	-	-	-
				PRE	-	-	-	c	-	-	-	-

Category, ItemNO, Class	Summary / CompID / System	Scope / Method / Procedure	Iso No. Comp. Desc. Code Case		Period 1 97	Period 1 99	Period 1 00	Period 2 02	Period 2 03	Period 2 05	Period 3 06	Period 3 08
L-GC	I957031	PSI/VT/VT-113		ISI	-	-	-	-	-	-	-	-
GC-1	#31	AUG/VT/VT-113	TENDON GREASE CAP	AUG	-	-	-	-	-	s	-	-
CC	CONTAINMENT			OWN	-	-	-	-	-	-	-	-
				PRE	-	-	-	c	-	-	-	-
L-GC	I957032	PSI/VT/VT-113		ISI	-	-	-	-	-	-	-	-
GC-1	#32	AUG/VT/VT-113	TENDON GREASE CAP	AUG	-	-	-	-	-	s	-	-
CC	CONTAINMENT			OWN	-	-	-	-	-	-	-	-
				PRE	-	-	-	c	-	-	-	-
L-GC	I957033	PSI/VT/VT-113		ISI	-	-	-	-	-	-	-	-
GC-1	#33	AUG/VT/VT-113	TENDON GREASE CAP	AUG	-	-	-	-	-	s	-	-
CC	CONTAINMENT			OWN	-	-	-	-	-	-	-	-
				PRE	-	-	-	c	-	-	-	-
L-GC	I957034	PSI/VT/VT-113		ISI	-	-	-	-	-	-	-	-
GC-1	#34	AUG/VT/VT-113	TENDON GREASE CAP	AUG	-	-	-	-	-	s	-	-
CC	CONTAINMENT			OWN	-	-	-	-	-	-	-	-
				PRE	-	-	-	c	-	-	-	-
L-GC	I957035	AUG/VT/VT-113		ISI	-	-	-	-	-	-	-	-
GC-1	#35	AUG/VT/VT-113	TENDON GREASE CAP	AUG	-	-	-	-	-	s	-	-
CC	CONTAINMENT			OWN	-	-	-	-	-	-	-	-
				PRE	-	-	-	c	-	-	-	-
L-GC	I957036	PSI/VT/VT-113		ISI	-	-	-	-	-	-	-	-
GC-1	#36	AUG/VT/VT-113	TENDON GREASE CAP	AUG	-	-	-	-	-	s	-	-
CC	CONTAINMENT			OWN	-	-	-	-	-	-	-	-
				PRE	-	-	-	c	-	-	-	-
L-GC	I957037	PSI/VT/VT-113		ISI	-	-	-	-	-	-	-	-
GC-1	#37	AUG/VT/VT-113	TENDON GREASE CAP	AUG	-	-	-	-	-	s	-	-
CC	CONTAINMENT			OWN	-	-	-	-	-	-	-	-
				PRE	-	-	-	c	-	-	-	-
L-GC	I957038	AUG/VT/VT-113		ISI	-	-	-	-	-	-	-	-
GC-1	#38	AUG/VT/VT-113	TENDON GREASE CAP	AUG	-	-	-	-	-	s	-	-
CC	CONTAINMENT			OWN	-	-	-	-	-	-	-	-
				PRE	-	-	-	c	-	-	-	-
L-GC	I957039	PSI/VT/VT-113		ISI	-	-	-	-	-	-	-	-
GC-1	#39	AUG/VT/VT-113	TENDON GREASE CAP	AUG	-	-	-	-	-	s	-	-
CC	CONTAINMENT			OWN	-	-	-	-	-	-	-	-
				PRE	-	-	-	c	-	-	-	-
L-GC	I957040	PSI/VT/VT-113		ISI	-	-	-	-	-	-	-	-
GC-1	#40	AUG/VT/VT-113	TENDON GREASE CAP	AUG	-	-	-	-	-	s	-	-
CC	CONTAINMENT			OWN	-	-	-	-	-	-	-	-
				PRE	-	-	-	c	-	-	-	-

Category, ItemNO, Class	Summary / CompID / System	Scope / Method / Procedure	Iso No. Comp. Desc. Code Case		Period 1 97	Period 1 99	Period 1 00	Period 2 02	Period 2 03	Period 2 05	Period 3 06	Period 3 08
L-GC	I957041	PSI/VT/VT-113		ISI	-	-	-	-	-	-	-	-
GC-1	#41	AUG/VT/VT-113	TENDON GREASE CAP	AUG	-	-	-	-	-	s	-	-
CC	CONTAINMENT			OWN	-	-	-	-	-	-	-	-
				PRE	-	-	-	c	-	-	-	-
L-GC	I957042	PSI/VT/VT-113		ISI	-	-	-	-	-	-	-	-
GC-1	#42	AUG/VT/VT-113	TENDON GREASE CAP	AUG	-	-	-	-	-	s	-	-
CC	CONTAINMENT			OWN	-	-	-	-	-	-	-	-
				PRE	-	-	-	c	-	-	-	-
L-GC	I957043	PSI/VT/VT-113		ISI	-	-	-	-	-	-	-	-
GC-1	#43	AUG/VT/VT-113	TENDON GREASE CAP	AUG	-	-	-	-	-	s	-	-
CC	CONTAINMENT			OWN	-	-	-	-	-	-	-	-
				PRE	-	-	-	c	-	-	-	-
L-GC	I957044	PSI/VT/VT-113		ISI	-	-	-	-	-	-	-	-
GC-1	#44	AUG/VT/VT-113	TENDON GREASE CAP	AUG	-	-	-	-	-	s	-	-
CC	CONTAINMENT			OWN	-	-	-	-	-	-	-	-
				PRE	-	-	-	c	-	-	-	-
L-GC	I957045	PSI/VT/VT-113		ISI	-	-	-	-	-	-	-	-
GC-1	#45	AUG/VT/VT-113	TENDON GREASE CAP	AUG	-	-	-	-	-	s	-	-
CC	CONTAINMENT			OWN	-	-	-	-	-	-	-	-
				PRE	-	-	-	c	-	-	-	-
L-GC	I957046	PSI/VT/VT-113		ISI	-	-	-	-	-	-	-	-
GC-1	#46	AUG/VT/VT-113	TENDON GREASE CAP	AUG	-	-	-	-	-	s	-	-
CC	CONTAINMENT			OWN	-	-	-	-	-	-	-	-
				PRE	-	-	-	c	-	-	-	-
L-GC	I957047	PSI/VT/VT-113		ISI	-	-	-	-	-	-	-	-
GC-1	#47	AUG/VT/VT-113	TENDON GREASE CAP	AUG	-	-	-	-	-	s	-	-
CC	CONTAINMENT			OWN	-	-	-	-	-	-	-	-
				PRE	-	-	-	c	-	-	-	-
L-GC	I957048	PSI/VT/VT-113		ISI	-	-	-	-	-	-	-	-
GC-1	#48	AUG/VT/VT-113	TENDON GREASE CAP	AUG	-	-	-	-	-	s	-	-
CC	CONTAINMENT			OWN	-	-	-	-	-	-	-	-
				PRE	-	-	-	c	-	-	-	-
L-GC	I957049	PSI/VT/VT-113		ISI	-	-	-	-	-	-	-	-
GC-1	#49	AUG/VT/VT-113	TENDON GREASE CAP	AUG	-	-	-	-	-	s	-	-
CC	CONTAINMENT			OWN	-	-	-	-	-	-	-	-
				PRE	-	-	-	c	-	-	-	-
L-GC	I957050	PSI/VT/VT-113		ISI	-	-	-	-	-	-	-	-
GC-1	#50	AUG/VT/VT-113	TENDON GREASE CAP	AUG	-	-	-	-	-	s	-	-
CC	CONTAINMENT			OWN	-	-	-	-	-	-	-	-
				PRE	-	-	-	c	-	-	-	-

Category, ItemNO, Class	Summary / CompID / System	Scope / Method / Procedure	Iso No. Comp. Desc. Code Case		Period 1 97	Period 1 99	Period 1 00	Period 2 02	Period 2 03	Period 2 05	Period 3 06	Period 3 08
L-GC	I957051	PSI/VT/VT-113		ISI	-	-	-	-	-	-	-	-
GC-1	#51	AUG/VT/VT-113	TENDON GREASE CAP	AUG	-	-	-	-	-	s	-	-
CC	CONTAINMENT			OWN	-	-	-	-	-	-	-	-
				PRE	-	-	-	c	-	-	-	-
L-GC	I957052	PSI/VT/VT-113		ISI	-	-	-	-	-	-	-	-
GC-1	#52	AUG/VT/VT-113	TENDON GREASE CAP	AUG	-	-	-	-	-	s	-	-
CC	CONTAINMENT			OWN	-	-	-	-	-	-	-	-
				PRE	-	-	-	c	-	-	-	-
L-GC	I957053	PSI/VT/VT-113		ISI	-	-	-	-	-	-	-	-
GC-1	#53	AUG/VT/VT-113	TENDON GREASE CAP	AUG	-	-	-	-	-	s	-	-
CC	CONTAINMENT			OWN	-	-	-	-	-	-	-	-
				PRE	-	-	-	c	-	-	-	-
L-GC	I957054	PSI/VT/VT-113		ISI	-	-	-	-	-	-	-	-
GC-1	#54	AUG/VT/VT-113	TENDON GREASE CAP	AUG	-	-	-	-	-	s	-	-
CC	CONTAINMENT			OWN	-	-	-	-	-	-	-	-
				PRE	-	-	-	c	-	-	-	-
L-GC	I957055	PSI/VT/VT-113		ISI	-	-	-	-	-	-	-	-
GC-1	#55	AUG/VT/VT-113	TENDON GREASE CAP	AUG	-	-	-	-	-	s	-	-
CC	CONTAINMENT			OWN	-	-	-	-	-	-	-	-
				PRE	-	-	-	c	-	-	-	-
L-GC	I957056	PSI/VT/VT-113		ISI	-	-	-	-	-	-	-	-
GC-1	#56	AUG/VT/VT-113	TENDON GREASE CAP	AUG	-	-	-	-	-	s	-	-
CC	CONTAINMENT			OWN	-	-	-	-	-	-	-	-
				PRE	-	-	-	c	-	-	-	-
L-GC	I957057	AUG/VT/VT-113		ISI	-	-	-	-	-	-	-	-
GC-1	#57	PSI/VT/VT-113	TENDON GREASE CAP	AUG	-	-	r	c	-	b	-	-
CC	CONTAINMENT	AUG/VT/VT-113		OWN	-	-	-	-	-	-	-	-
				PRE	-	-	-	c	-	-	-	-
L-GC	I957058	AUG/VT/VT-113		ISI	-	-	-	-	-	-	-	-
GC-1	#58	AUG/VT/VT-113	TENDON GREASE CAP	AUG	-	-	-	-	-	s	-	-
CC	CONTAINMENT			OWN	-	-	-	-	-	-	-	-
				PRE	-	-	-	c	-	-	-	-
L-GC	I957059	PSI/VT/VT-113		ISI	-	-	-	-	-	-	-	-
GC-1	#59	AUG/VT/VT-113	TENDON GREASE CAP	AUG	-	-	-	-	-	s	-	-
CC	CONTAINMENT			OWN	-	-	-	-	-	-	-	-
				PRE	-	-	-	c	-	-	-	-
L-GC	I957060	PSI/VT/VT-113		ISI	-	-	-	-	-	-	-	-
GC-1	#60	AUG/VT/VT-113	TENDON GREASE CAP	AUG	-	-	-	-	-	s	-	-
CC	CONTAINMENT			OWN	-	-	-	-	-	-	-	-
				PRE	-	-	-	c	-	-	-	-

Category, ItemNO, Class	Summary / CompID / System	Scope / Method / Procedure	Iso No. Comp. Desc. Code Case		Period 1			Period 2			Period 3	
					97	99	00	02	03	05	06	08
L-GC	I957061	PSI/VT/VT-113		ISI	-	-	-	-	-	-	-	-
GC-1	#61	AUG/VT/VT-113	TENDON GREASE CAP	AUG	-	-	-	-	-	s	-	-
CC	CONTAINMENT			OWN	-	-	-	-	-	-	-	-
				PRE	-	-	-	c	-	-	-	-
L-GC	I957062	PSI/VT/VT-113		ISI	-	-	-	-	-	-	-	-
GC-1	#62	AUG/VT/VT-113	TENDON GREASE CAP	AUG	-	-	-	-	-	s	-	-
CC	CONTAINMENT			OWN	-	-	-	-	-	-	-	-
				PRE	-	-	-	c	-	-	-	-
L-GC	I957063	PSI/VT/VT-113		ISI	-	-	-	-	-	-	-	-
GC-1	#63	AUG/VT/VT-113	TENDON GREASE CAP	AUG	-	-	-	-	-	s	-	-
CC	CONTAINMENT			OWN	-	-	-	-	-	-	-	-
				PRE	-	-	-	c	-	-	-	-
L-GC	I957064	PSI/VT/VT-113		ISI	-	-	-	-	-	-	-	-
GC-1	#64	AUG/VT/VT-113	TENDON GREASE CAP	AUG	-	-	-	-	-	s	-	-
CC	CONTAINMENT			OWN	-	-	-	-	-	-	-	-
				PRE	-	-	-	c	-	-	-	-
L-GC	I957065	PSI/VT/VT-113		ISI	-	-	-	-	-	-	-	-
GC-1	#65	AUG/VT/VT-113	TENDON GREASE CAP	AUG	-	-	-	-	-	s	-	-
CC	CONTAINMENT			OWN	-	-	-	-	-	-	-	-
				PRE	-	-	-	c	-	-	-	-
L-GC	I957066	AUG/VT/VT-113		ISI	-	-	-	-	-	-	-	-
GC-1	#66	PSI/VT/VT-113	TENDON GREASE CAP	AUG	-	-	r	c	-	b	-	-
CC	CONTAINMENT	AUG/VT/VT-113		OWN	-	-	-	-	-	-	-	-
				PRE	-	-	-	c	-	-	-	-
L-GC	I957067	PSI/VT/VT-113		ISI	-	-	-	-	-	-	-	-
GC-1	#67	AUG/VT/VT-113	TENDON GREASE CAP	AUG	-	-	-	-	-	s	-	-
CC	CONTAINMENT			OWN	-	-	-	-	-	-	-	-
				PRE	-	-	-	c	-	-	-	-
L-GC	I957068	PSI/VT/VT-113		ISI	-	-	-	-	-	-	-	-
GC-1	#68	AUG/VT/VT-113	TENDON GREASE CAP	AUG	-	-	-	-	-	s	-	-
CC	CONTAINMENT			OWN	-	-	-	-	-	-	-	-
				PRE	-	-	-	c	-	-	-	-
L-GC	I957069	PSI/VT/VT-113		ISI	-	-	-	-	-	-	-	-
GC-1	#69	AUG/VT/VT-113	TENDON GREASE CAP	AUG	-	-	-	-	-	s	-	-
CC	CONTAINMENT			OWN	-	-	-	-	-	-	-	-
				PRE	-	-	-	c	-	-	-	-
L-GC	I957070	PSI/VT/VT-113		ISI	-	-	-	-	-	-	-	-
GC-1	#70	AUG/VT/VT-113	TENDON GREASE CAP	AUG	-	-	-	-	-	s	-	-
CC	CONTAINMENT			OWN	-	-	-	-	-	-	-	-
				PRE	-	-	-	c	-	-	-	-

Category, ItemNO, Class	Summary / CompID / System	Scope / Method / Procedure	Iso No. Comp. Desc. Code Case		Period 1			Period 2			Period 3	
					97	99	00	02	03	05	06	08
L-GC	I957071	AUG/VT/VT-113		ISI	-	-	-	-	-	-	-	-
GC-1	#71	AUG/VT/VT-113	TENDON GREASE CAP	AUG	-	-	-	-	-	s	-	-
CC	CONTAINMENT			OWN	-	-	-	-	-	-	-	-
				PRE	-	-	-	c	-	-	-	-
L-GC	I957072	AUG/VT/VT-113		ISI	-	-	-	-	-	-	-	-
GC-1	#72	AUG/VT/VT-113	TENDON GREASE CAP	AUG	-	-	-	-	-	s	-	-
CC	CONTAINMENT			OWN	-	-	-	-	-	-	-	-
				PRE	-	-	-	c	-	-	-	-
L-GC	I957073	PSI/VT/VT-113		ISI	-	-	-	-	-	-	-	-
GC-1	#73	AUG/VT/VT-113	TENDON GREASE CAP	AUG	-	-	-	-	-	s	-	-
CC	CONTAINMENT			OWN	-	-	-	-	-	-	-	-
				PRE	-	-	-	c	-	-	-	-
L-GC	I957074	PSI/VT/VT-113		ISI	-	-	-	-	-	-	-	-
GC-1	#74	AUG/VT/VT-113	TENDON GREASE CAP	AUG	-	-	-	-	-	s	-	-
CC	CONTAINMENT			OWN	-	-	-	-	-	-	-	-
				PRE	-	-	-	c	-	-	-	-
L-GC	I957075	PSI/VT/VT-113		ISI	-	-	-	-	-	-	-	-
GC-1	#75	AUG/VT/VT-113	TENDON GREASE CAP	AUG	-	-	-	-	-	s	-	-
CC	CONTAINMENT			OWN	-	-	-	-	-	-	-	-
				PRE	-	-	-	c	-	-	-	-
L-GC	I957076	PSI/VT/VT-113		ISI	-	-	-	-	-	-	-	-
GC-1	#76	AUG/VT/VT-113	TENDON GREASE CAP	AUG	-	-	-	-	-	s	-	-
CC	CONTAINMENT			OWN	-	-	-	-	-	-	-	-
				PRE	-	-	-	c	-	-	-	-
L-GC	I957077	AUG/VT/VT-113		ISI	-	-	-	-	-	-	-	-
GC-1	#77	PSI/VT/VT-113	TENDON GREASE CAP	AUG	-	-	r	c	-	b	-	-
CC	CONTAINMENT	AUG/VT/VT-113		OWN	-	-	-	-	-	-	-	-
				PRE	-	-	-	c	-	-	-	-
L-GC	I957078	PSI/VT/VT-113		ISI	-	-	-	-	-	-	-	-
GC-1	#78	AUG/VT/VT-113	TENDON GREASE CAP	AUG	-	-	-	-	-	s	-	-
CC	CONTAINMENT			OWN	-	-	-	-	-	-	-	-
				PRE	-	-	-	c	-	-	-	-
L-GC	I957079	PSI/VT/VT-113		ISI	-	-	-	-	-	-	-	-
GC-1	#79	AUG/VT/VT-113	TENDON GREASE CAP	AUG	-	-	-	-	-	s	-	-
CC	CONTAINMENT			OWN	-	-	-	-	-	-	-	-
				PRE	-	-	-	c	-	-	-	-
L-GC	I957080	PSI/VT/VT-113		ISI	-	-	-	-	-	-	-	-
GC-1	#80	AUG/VT/VT-113	TENDON GREASE CAP	AUG	-	-	-	-	-	s	-	-
CC	CONTAINMENT			OWN	-	-	-	-	-	-	-	-
				PRE	-	-	-	c	-	-	-	-

Category, ItemNO, Class	Summary / CompID / System	Scope / Method / Procedure	Iso No. Comp. Desc. Code Case		Period 1 97	Period 1 99	Period 1 00	Period 2 02	Period 2 03	Period 2 05	Period 3 06	Period 3 08
L-GC	I957081	PSI/VT/VT-113		ISI	-	-	-	-	-	-	-	-
GC-1	#81	AUG/VT/VT-113	TENDON GREASE CAP	AUG	-	-	-	-	-	s	-	-
CC	CONTAINMENT			OWN	-	-	-	-	-	-	-	-
				PRE	-	-	-	c	-	-	-	-
L-GC	I957082	PSI/VT/VT-113		ISI	-	-	-	-	-	-	-	-
GC-1	#82	AUG/VT/VT-113	TENDON GREASE CAP	AUG	-	-	-	-	-	s	-	-
CC	CONTAINMENT			OWN	-	-	-	-	-	-	-	-
				PRE	-	-	-	c	-	-	-	-
L-GC	I957083	PSI/VT/VT-113		ISI	-	-	-	-	-	-	-	-
GC-1	#83	AUG/VT/VT-113	TENDON GREASE CAP	AUG	-	-	-	-	-	s	-	-
CC	CONTAINMENT			OWN	-	-	-	-	-	-	-	-
				PRE	-	-	-	c	-	-	-	-
L-GC	I957084	PSI/VT/VT-113		ISI	-	-	-	-	-	-	-	-
GC-1	#84	AUG/VT/VT-113	TENDON GREASE CAP	AUG	-	-	-	-	-	s	-	-
CC	CONTAINMENT			OWN	-	-	-	-	-	-	-	-
				PRE	-	-	-	c	-	-	-	-
L-GC	I957085	PSI/VT/VT-113		ISI	-	-	-	-	-	-	-	-
GC-1	#85	AUG/VT/VT-113	TENDON GREASE CAP	AUG	-	-	-	-	-	s	-	-
CC	CONTAINMENT			OWN	-	-	-	-	-	-	-	-
				PRE	-	-	-	c	-	-	-	-
L-GC	I957086	PSI/VT/VT-113		ISI	-	-	-	-	-	-	-	-
GC-1	#86	AUG/VT/VT-113	TENDON GREASE CAP	AUG	-	-	-	-	-	s	-	-
CC	CONTAINMENT			OWN	-	-	-	-	-	-	-	-
				PRE	-	-	-	c	-	-	-	-
L-GC	I957087	PSI/VT/VT-113		ISI	-	-	-	-	-	-	-	-
GC-1	#87	AUG/VT/VT-113	TENDON GREASE CAP	AUG	-	-	-	-	-	s	-	-
CC	CONTAINMENT			OWN	-	-	-	-	-	-	-	-
				PRE	-	-	-	c	-	-	-	-
L-GC	I957088	PSI/VT/VT-113		ISI	-	-	-	-	-	-	-	-
GC-1	#88	AUG/VT/VT-113	TENDON GREASE CAP	AUG	-	-	-	-	-	s	-	-
CC	CONTAINMENT			OWN	-	-	-	-	-	-	-	-
				PRE	-	-	-	c	-	-	-	-
L-GC	I957089	PSI/VT/VT-113		ISI	-	-	-	-	-	-	-	-
GC-1	#89	AUG/VT/VT-113	TENDON GREASE CAP	AUG	-	-	-	-	-	s	-	-
CC	CONTAINMENT			OWN	-	-	-	-	-	-	-	-
				PRE	-	-	-	c	-	-	-	-
L-GC	I957090	PSI/VT/VT-113		ISI	-	-	-	-	-	-	-	-
GC-1	#90	AUG/VT/VT-113	TENDON GREASE CAP	AUG	-	-	-	-	-	s	-	-
CC	CONTAINMENT			OWN	-	-	-	-	-	-	-	-
				PRE	-	-	-	c	-	-	-	-

Category, ItemNO, Class	Summary / CompID / System	Scope / Method / Procedure	Iso No. Comp. Desc. Code Case		Period 1			Period 2			Period 3	
					97	99	00	02	03	05	06	08
L-GC	I957091	PSI/VT/VT-113		ISI	-	-	-	-	-	-	-	-
GC-1	#91	AUG/VT/VT-113	TENDON GREASE CAP	AUG	-	-	-	-	-	s	-	-
CC	CONTAINMENT			OWN	-	-	-	-	-	-	-	-
				PRE	-	-	-	c	-	-	-	-
L-GC	I957092	PSI/VT/VT-113		ISI	-	-	-	-	-	-	-	-
GC-1	#92	AUG/VT/VT-113	TENDON GREASE CAP	AUG	-	-	-	-	-	s	-	-
CC	CONTAINMENT			OWN	-	-	-	-	-	-	-	-
				PRE	-	-	-	c	-	-	-	-
L-GC	I957093	PSI/VT/VT-113		ISI	-	-	-	-	-	-	-	-
GC-1	#93	AUG/VT/VT-113	TENDON GREASE CAP	AUG	-	-	-	-	-	s	-	-
CC	CONTAINMENT			OWN	-	-	-	-	-	-	-	-
				PRE	-	-	-	c	-	-	-	-
L-GC	I957094	PSI/VT/VT-113		ISI	-	-	-	-	-	-	-	-
GC-1	#94	AUG/VT/VT-113	TENDON GREASE CAP	AUG	-	-	-	-	-	s	-	-
CC	CONTAINMENT			OWN	-	-	-	-	-	-	-	-
				PRE	-	-	-	c	-	-	-	-
L-GC	I957095	PSI/VT/VT-113		ISI	-	-	-	-	-	-	-	-
GC-1	#95	AUG/VT/VT-113	TENDON GREASE CAP	AUG	-	-	-	-	-	s	-	-
CC	CONTAINMENT			OWN	-	-	-	-	-	-	-	-
				PRE	-	-	-	c	-	-	-	-
L-GC	I957096	PSI/VT/VT-113		ISI	-	-	-	-	-	-	-	-
GC-1	#96	AUG/VT/VT-113	TENDON GREASE CAP	AUG	-	-	-	-	-	s	-	-
CC	CONTAINMENT			OWN	-	-	-	-	-	-	-	-
				PRE	-	-	-	c	-	-	-	-
L-GC	I957097	PSI/VT/VT-113		ISI	-	-	-	-	-	-	-	-
GC-1	#97	AUG/VT/VT-113	TENDON GREASE CAP	AUG	-	-	-	-	-	s	-	-
CC	CONTAINMENT			OWN	-	-	-	-	-	-	-	-
				PRE	-	-	-	c	-	-	-	-
L-GC	I957098	PSI/VT/VT-113		ISI	-	-	-	-	-	-	-	-
GC-1	#98	AUG/VT/VT-113	TENDON GREASE CAP	AUG	-	-	-	-	-	s	-	-
CC	CONTAINMENT			OWN	-	-	-	-	-	-	-	-
				PRE	-	-	-	c	-	-	-	-
L-GC	I957099	PSI/VT/VT-113		ISI	-	-	-	-	-	-	-	-
GC-1	#99	AUG/VT/VT-113	TENDON GREASE CAP	AUG	-	-	-	-	-	s	-	-
CC	CONTAINMENT			OWN	-	-	-	-	-	-	-	-
				PRE	-	-	-	c	-	-	-	-
L-GC	I957100	PSI/VT/VT-113		ISI	-	-	-	-	-	-	-	-
GC-1	#100	AUG/VT/VT-113	TENDON GREASE CAP	AUG	-	-	-	-	-	s	-	-
CC	CONTAINMENT			OWN	-	-	-	-	-	-	-	-
				PRE	-	-	-	c	-	-	-	-

Category, ItemNO, Class	Summary / CompID / System	Scope / Method / Procedure	Iso No. Comp. Desc. Code Case		Period 1 97	Period 1 99	Period 1 00	Period 2 02	Period 2 03	Period 2 05	Period 3 06	Period 3 08
L-GC	I957101	PSI/VT/VT-113		ISI	-	-	-	-	-	-	-	-
GC-1	#101	AUG/VT/VT-113	TENDON GREASE CAP	AUG	-	-	-	-	-	s	-	-
CC	CONTAINMENT			OWN	-	-	-	-	-	-	-	-
				PRE	-	-	-	c	-	-	-	-
L-GC	I957102	PSI/VT/VT-113		ISI	-	-	-	-	-	-	-	-
GC-1	#102	AUG/VT/VT-113	TENDON GREASE CAP	AUG	-	-	-	-	-	s	-	-
CC	CONTAINMENT			OWN	-	-	-	-	-	-	-	-
				PRE	-	-	-	c	-	-	-	-
L-GC	I957103	PSI/VT/VT-113		ISI	-	-	-	-	-	-	-	-
GC-1	#103	AUG/VT/VT-113	TENDON GREASE CAP	AUG	-	-	-	-	-	s	-	-
CC	CONTAINMENT			OWN	-	-	-	-	-	-	-	-
				PRE	-	-	-	c	-	-	-	-
L-GC	I957104	PSI/VT/VT-113		ISI	-	-	-	-	-	-	-	-
GC-1	#104	AUG/VT/VT-113	TENDON GREASE CAP	AUG	-	-	-	-	-	s	-	-
CC	CONTAINMENT			OWN	-	-	-	-	-	-	-	-
				PRE	-	-	-	c	-	-	-	-
L-GC	I957105	AUG/VT/VT-113		ISI	-	-	-	-	-	-	-	-
GC-1	#105	PSI/VT/VT-113	TENDON GREASE CAP	AUG	-	-	r	c	-	b	-	-
CC	CONTAINMENT	AUG/VT/VT-113		OWN	-	-	-	-	-	-	-	-
				PRE	-	-	-	c	-	-	-	-
L-GC	I957106	PSI/VT/VT-113		ISI	-	-	-	-	-	-	-	-
GC-1	#106	AUG/VT/VT-113	TENDON GREASE CAP	AUG	-	-	-	-	-	s	-	-
CC	CONTAINMENT			OWN	-	-	-	-	-	-	-	-
				PRE	-	-	-	c	-	-	-	-
L-GC	I957107	PSI/VT/VT-113		ISI	-	-	-	-	-	-	-	-
GC-1	#107	AUG/VT/VT-113	TENDON GREASE CAP	AUG	-	-	-	-	-	s	-	-
CC	CONTAINMENT			OWN	-	-	-	-	-	-	-	-
				PRE	-	-	-	c	-	-	-	-
L-GC	I957108	PSI/VT/VT-113		ISI	-	-	-	-	-	-	-	-
GC-1	#108	AUG/VT/VT-113	TENDON GREASE CAP	AUG	-	-	-	-	-	s	-	-
CC	CONTAINMENT			OWN	-	-	-	-	-	-	-	-
				PRE	-	-	-	c	-	-	-	-
L-GC	I957109	PSI/VT/VT-113		ISI	-	-	-	-	-	-	-	-
GC-1	#109	AUG/VT/VT-113	TENDON GREASE CAP	AUG	-	-	-	-	-	s	-	-
CC	CONTAINMENT			OWN	-	-	-	-	-	-	-	-
				PRE	-	-	-	c	-	-	-	-
L-GC	I957110	AUG/VT/VT-113		ISI	-	-	-	-	-	-	-	-
GC-1	#110	PSI/VT/VT-113	TENDON GREASE CAP	AUG	-	-	r	c	-	b	-	-
CC	CONTAINMENT	AUG/VT/VT-113		OWN	-	-	-	-	-	-	-	-
				PRE	-	-	-	c	-	-	-	-

Category, ItemNO, Class	Summary / CompID / System	Scope / Method / Procedure	Iso No. Comp. Desc. Code Case		Period 1			Period 2			Period 3	
					97	99	00	02	03	05	06	08
L-GC	I957111	PSI/VT/VT-113		ISI	-	-	-	-	-	-	-	-
GC-1	#111	AUG/VT/VT-113	TENDON GREASE CAP	AUG	-	-	-	-	-	s	-	-
CC	CONTAINMENT			OWN	-	-	-	-	-	-	-	-
				PRE	-	-	-	c	-	-	-	-
L-GC	I957112	AUG/VT/VT-113		ISI	-	-	-	-	-	-	-	-
GC-1	#112	PSI/VT/VT-113	TENDON GREASE CAP	AUG	-	-	r	c	-	b	-	-
CC	CONTAINMENT	AUG/VT/VT-113		OWN	-	-	-	-	-	-	-	-
				PRE	-	-	-	c	-	-	-	-
L-GC	I957113	PSI/VT/VT-113		ISI	-	-	-	-	-	-	-	-
GC-1	#113	AUG/VT/VT-113	TENDON GREASE CAP	AUG	-	-	-	-	-	s	-	-
CC	CONTAINMENT			OWN	-	-	-	-	-	-	-	-
				PRE	-	-	-	c	-	-	-	-
L-GC	I957114	PSI/VT/VT-113		ISI	-	-	-	-	-	-	-	-
GC-1	#114	AUG/VT/VT-113	TENDON GREASE CAP	AUG	-	-	-	-	-	s	-	-
CC	CONTAINMENT			OWN	-	-	-	-	-	-	-	-
				PRE	-	-	-	c	-	-	-	-
L-GC	I957115	PSI/VT/VT-113		ISI	-	-	-	-	-	-	-	-
GC-1	#115	AUG/VT/VT-113	TENDON GREASE CAP	AUG	-	-	-	-	-	s	-	-
CC	CONTAINMENT			OWN	-	-	-	-	-	-	-	-
				PRE	-	-	-	c	-	-	-	-
L-GC	I957116	PSI/VT/VT-113		ISI	-	-	-	-	-	-	-	-
GC-1	#116	AUG/VT/VT-113	TENDON GREASE CAP	AUG	-	-	-	-	-	s	-	-
CC	CONTAINMENT			OWN	-	-	-	-	-	-	-	-
				PRE	-	-	-	c	-	-	-	-
L-GC	I957117	AUG/VT/VT-113		ISI	-	-	-	-	-	-	-	-
GC-1	#117	AUG/VT/VT-113	TENDON GREASE CAP	AUG	-	-	-	-	-	s	-	-
CC	CONTAINMENT			OWN	-	-	-	-	-	-	-	-
				PRE	-	-	-	c	-	-	-	-
L-GC	I957118	PSI/VT/VT-113		ISI	-	-	-	-	-	-	-	-
GC-1	#118	AUG/VT/VT-113	TENDON GREASE CAP	AUG	-	-	-	-	-	s	-	-
CC	CONTAINMENT			OWN	-	-	-	-	-	-	-	-
				PRE	-	-	-	c	-	-	-	-
L-GC	I957119	PSI/VT/VT-113		ISI	-	-	-	-	-	-	-	-
GC-1	#119	AUG/VT/VT-113	TENDON GREASE CAP	AUG	-	-	-	-	-	s	-	-
CC	CONTAINMENT			OWN	-	-	-	-	-	-	-	-
				PRE	-	-	-	c	-	-	-	-
L-GC	I957120	PSI/VT/VT-113		ISI	-	-	-	-	-	-	-	-
GC-1	#120	AUG/VT/VT-113	TENDON GREASE CAP	AUG	-	-	-	-	-	s	-	-
CC	CONTAINMENT			OWN	-	-	-	-	-	-	-	-
				PRE	-	-	-	c	-	-	-	-

Category, ItemNO, Class	Summary / CompID / System	Scope / Method / Procedure	Iso No. Comp. Desc. Code Case		Period 1			Period 2			Period 3	
					97	99	00	02	03	05	06	08
L-GC	I957121	PSI/VT/VT-113		ISI	-	-	-	-	-	-	-	-
GC-1	#121	AUG/VT/VT-113	TENDON GREASE CAP	AUG	-	-	-	-	-	s	-	-
CC	CONTAINMENT			OWN	-	-	-	-	-	-	-	-
				PRE	-	-	-	c	-	-	-	-
L-GC	I957122	AUG/VT/VT-113		ISI	-	-	-	-	-	-	-	-
GC-1	#122	PSI/VT/VT-113	TENDON GREASE CAP	AUG	-	-	r	c	-	b	-	-
CC	CONTAINMENT	AUG/VT/VT-113		OWN	-	-	-	-	-	-	-	-
				PRE	-	-	-	c	-	-	-	-
L-GC	I957123	PSI/VT/VT-113		ISI	-	-	-	-	-	-	-	-
GC-1	#123	AUG/VT/VT-113	TENDON GREASE CAP	AUG	-	-	-	-	-	s	-	-
CC	CONTAINMENT			OWN	-	-	-	-	-	-	-	-
				PRE	-	-	-	c	-	-	-	-
L-GC	I957124	PSI/VT/VT-113		ISI	-	-	-	-	-	-	-	-
GC-1	#124	AUG/VT/VT-113	TENDON GREASE CAP	AUG	-	-	-	-	-	s	-	-
CC	CONTAINMENT			OWN	-	-	-	-	-	-	-	-
				PRE	-	-	-	c	-	-	-	-
L-GC	I957125	PSI/VT/VT-113		ISI	-	-	-	-	-	-	-	-
GC-1	#125	AUG/VT/VT-113	TENDON GREASE CAP	AUG	-	-	-	-	-	s	-	-
CC	CONTAINMENT			OWN	-	-	-	-	-	-	-	-
				PRE	-	-	-	c	-	-	-	-
L-GC	I957126	PSI/VT/VT-113		ISI	-	-	-	-	-	-	-	-
GC-1	#126	AUG/VT/VT-113	TENDON GREASE CAP	AUG	-	-	-	-	-	s	-	-
CC	CONTAINMENT			OWN	-	-	-	-	-	-	-	-
				PRE	-	-	-	c	-	-	-	-
L-GC	I957127	PSI/VT/VT-113		ISI	-	-	-	-	-	-	-	-
GC-1	#127	AUG/VT/VT-113	TENDON GREASE CAP	AUG	-	-	-	-	-	s	-	-
CC	CONTAINMENT			OWN	-	-	-	-	-	-	-	-
				PRE	-	-	-	c	-	-	-	-
L-GC	I957128	AUG/VT/VT-113		ISI	-	-	-	-	-	-	-	-
GC-1	#128	PSI/VT/VT-113	TENDON GREASE CAP	AUG	-	-	r	c	-	b	-	-
CC	CONTAINMENT	AUG/VT/VT-113		OWN	-	-	-	-	-	-	-	-
				PRE	-	-	-	c	-	-	-	-
L-GC	I957129	AUG/VT/VT-113		ISI	-	-	-	-	-	-	-	-
GC-1	#129	PSI/VT/VT-113	TENDON GREASE CAP	AUG	-	-	r	c	-	b	-	-
CC	CONTAINMENT	AUG/VT/VT-113		OWN	-	-	-	-	-	-	-	-
				PRE	-	-	-	c	-	-	-	-
L-GC	I957130	PSI/VT/VT-113		ISI	-	-	-	-	-	-	-	-
GC-1	#130	AUG/VT/VT-113	TENDON GREASE CAP	AUG	-	-	-	-	-	s	-	-
CC	CONTAINMENT			OWN	-	-	-	-	-	-	-	-
				PRE	-	-	-	c	-	-	-	-

Category, ItemNO, Class	Summary / CompID / System	Scope / Method / Procedure	Iso No. Comp. Desc. Code Case		Period 1 97	Period 1 99	Period 1 00	Period 2 02	Period 2 03	Period 2 05	Period 3 06	Period 3 08
L-GC	I957131	PSI/VT/VT-113		ISI	-	-	-	-	-	-	-	-
GC-1	#131	AUG/VT/VT-113	TENDON GREASE CAP	AUG	-	-	-	-	-	s	-	-
CC	CONTAINMENT			OWN	-	-	-	-	-	-	-	-
				PRE	-	-	-	c	-	-	-	-
L-GC	I957132	AUG/VT/VT-113		ISI	-	-	-	-	-	-	-	-
GC-1	#132	AUG/VT/VT-113	TENDON GREASE CAP	AUG	-	-	-	-	-	s	-	-
CC	CONTAINMENT			OWN	-	-	-	-	-	-	-	-
				PRE	-	-	-	c	-	-	-	-
L-GC	I957133	PSI/VT/VT-113		ISI	-	-	-	-	-	-	-	-
GC-1	#133	AUG/VT/VT-113	TENDON GREASE CAP	AUG	-	-	-	-	-	s	-	-
CC	CONTAINMENT			OWN	-	-	-	-	-	-	-	-
				PRE	-	-	-	c	-	-	-	-
L-GC	I957134	PSI/VT/VT-113		ISI	-	-	-	-	-	-	-	-
GC-1	#134	AUG/VT/VT-113	TENDON GREASE CAP	AUG	-	-	-	-	-	s	-	-
CC	CONTAINMENT			OWN	-	-	-	-	-	-	-	-
				PRE	-	-	-	c	-	-	-	-
L-GC	I957135	PSI/VT/VT-113		ISI	-	-	-	-	-	-	-	-
GC-1	#135	AUG/VT/VT-113	TENDON GREASE CAP	AUG	-	-	-	-	-	s	-	-
CC	CONTAINMENT			OWN	-	-	-	-	-	-	-	-
				PRE	-	-	-	c	-	-	-	-
L-GC	I957136	PSI/VT/VT-113		ISI	-	-	-	-	-	-	-	-
GC-1	#136	AUG/VT/VT-113	TENDON GREASE CAP	AUG	-	-	-	-	-	s	-	-
CC	CONTAINMENT			OWN	-	-	-	-	-	-	-	-
				PRE	-	-	-	c	-	-	-	-
L-GC	I957137	PSI/VT/VT-113		ISI	-	-	-	-	-	-	-	-
GC-1	#137	AUG/VT/VT-113	TENDON GREASE CAP	AUG	-	-	-	-	-	s	-	-
CC	CONTAINMENT			OWN	-	-	-	-	-	-	-	-
				PRE	-	-	-	c	-	-	-	-
L-GC	I957138	PSI/VT/VT-113		ISI	-	-	-	-	-	-	-	-
GC-1	#138	AUG/VT/VT-113	TENDON GREASE CAP	AUG	-	-	-	-	-	s	-	-
CC	CONTAINMENT			OWN	-	-	-	-	-	-	-	-
				PRE	-	-	-	c	-	-	-	-
L-GC	I957139	PSI/VT/VT-113		ISI	-	-	-	-	-	-	-	-
GC-1	#139	AUG/VT/VT-113	TENDON GREASE CAP	AUG	-	-	-	-	-	s	-	-
CC	CONTAINMENT			OWN	-	-	-	-	-	-	-	-
				PRE	-	-	-	c	-	-	-	-
L-GC	I957140	PSI/VT/VT-113		ISI	-	-	-	-	-	-	-	-
GC-1	#140	AUG/VT/VT-113	TENDON GREASE CAP	AUG	-	-	-	-	-	s	-	-
CC	CONTAINMENT			OWN	-	-	-	-	-	-	-	-
				PRE	-	-	-	c	-	-	-	-

Category, ItemNO, Class	Summary / CompID / System	Scope / Method / Procedure	Iso No. Comp. Desc. Code Case		Period 1 97	Period 1 99	Period 1 00	Period 2 02	Period 2 03	Period 2 05	Period 3 06	Period 3 08
L-GC	I957141	PSI/VT/VT-113		ISI	-	-	-	-	-	-	-	-
GC-1	#141	AUG/VT/VT-113	TENDON GREASE CAP	AUG	-	-	-	-	-	s	-	-
CC	CONTAINMENT			OWN	-	-	-	-	-	-	-	-
				PRE	-	-	-	c	-	-	-	-
L-GC	I957142	PSI/VT/VT-113		ISI	-	-	-	-	-	-	-	-
GC-1	#142	AUG/VT/VT-113	TENDON GREASE CAP	AUG	-	-	-	-	-	s	-	-
CC	CONTAINMENT			OWN	-	-	-	-	-	-	-	-
				PRE	-	-	-	c	-	-	-	-
L-GC	I957143	PSI/VT/VT-113		ISI	-	-	-	-	-	-	-	-
GC-1	#143	AUG/VT/VT-113	TENDON GREASE CAP	AUG	-	-	-	-	-	s	-	-
CC	CONTAINMENT			OWN	-	-	-	-	-	-	-	-
				PRE	-	-	-	c	-	-	-	-
L-GC	I957144	PSI/VT/VT-113		ISI	-	-	-	-	-	-	-	-
GC-1	#144	AUG/VT/VT-113	TENDON GREASE CAP	AUG	-	-	-	-	-	s	-	-
CC	CONTAINMENT			OWN	-	-	-	-	-	-	-	-
				PRE	-	-	-	c	-	-	-	-
L-GC	I957145	AUG/VT/VT-113		ISI	-	-	-	-	-	-	-	-
GC-1	#145	AUG/VT/VT-113	TENDON GREASE CAP	AUG	-	-	-	-	-	s	-	-
CC	CONTAINMENT			OWN	-	-	-	-	-	-	-	-
				PRE	-	-	-	c	-	-	-	-
L-GC	I957146	PSI/VT/VT-113		ISI	-	-	-	-	-	-	-	-
GC-1	#146	AUG/VT/VT-113	TENDON GREASE CAP	AUG	-	-	-	-	-	s	-	-
CC	CONTAINMENT			OWN	-	-	-	-	-	-	-	-
				PRE	-	-	-	c	-	-	-	-
L-GC	I957147	PSI/VT/VT-113		ISI	-	-	-	-	-	-	-	-
GC-1	#147	AUG/VT/VT-113	TENDON GREASE CAP	AUG	-	-	-	-	-	s	-	-
CC	CONTAINMENT			OWN	-	-	-	-	-	-	-	-
				PRE	-	-	-	c	-	-	-	-
L-GC	I957148	PSI/VT/VT-113		ISI	-	-	-	-	-	-	-	-
GC-1	#148	AUG/VT/VT-113	TENDON GREASE CAP	AUG	-	-	-	-	-	s	-	-
CC	CONTAINMENT			OWN	-	-	-	-	-	-	-	-
				PRE	-	-	-	c	-	-	-	-
L-GC	I957149	PSI/VT/VT-113		ISI	-	-	-	-	-	-	-	-
GC-1	#149	AUG/VT/VT-113	TENDON GREASE CAP	AUG	-	-	-	-	-	s	-	-
CC	CONTAINMENT			OWN	-	-	-	-	-	-	-	-
				PRE	-	-	-	c	-	-	-	-
L-GC	I957150	PSI/VT/VT-113		ISI	-	-	-	-	-	-	-	-
GC-1	#150	AUG/VT/VT-113	TENDON GREASE CAP	AUG	-	-	-	-	-	s	-	-
CC	CONTAINMENT			OWN	-	-	-	-	-	-	-	-
				PRE	-	-	-	c	-	-	-	-

Category, ItemNO, Class	Summary / CompID / System	Scope / Method / Procedure	Iso No. Comp. Desc. Code Case		Period 1 97	Period 1 99	Period 1 00	Period 2 02	Period 2 03	Period 2 05	Period 3 06	Period 3 08
L-GC	I957151	PSI/VT/VT-113		ISI	-	-	-	-	-	-	-	-
GC-1	#151	AUG/VT/VT-113	TENDON GREASE CAP	AUG	-	-	-	-	-	s	-	-
CC	CONTAINMENT			OWN	-	-	-	-	-	-	-	-
				PRE	-	-	-	c	-	-	-	-
L-GC	I957152	AUG/VT/VT-113		ISI	-	-	-	-	-	-	-	-
GC-1	#152	AUG/VT/VT-113	TENDON GREASE CAP	AUG	-	-	-	-	-	s	-	-
CC	CONTAINMENT			OWN	-	-	-	-	-	-	-	-
				PRE	-	-	-	c	-	-	-	-
L-GC	I957153	PSI/VT/VT-113		ISI	-	-	-	-	-	-	-	-
GC-1	#153	AUG/VT/VT-113	TENDON GREASE CAP	AUG	-	-	-	-	-	s	-	-
CC	CONTAINMENT			OWN	-	-	-	-	-	-	-	-
				PRE	-	-	-	c	-	-	-	-
L-GC	I957154	PSI/VT/VT-113		ISI	-	-	-	-	-	-	-	-
GC-1	#154	AUG/VT/VT-113	TENDON GREASE CAP	AUG	-	-	-	-	-	s	-	-
CC	CONTAINMENT			OWN	-	-	-	-	-	-	-	-
				PRE	-	-	-	c	-	-	-	-
L-GC	I957155	PSI/VT/VT-113		ISI	-	-	-	-	-	-	-	-
GC-1	#155	AUG/VT/VT-113	TENDON GREASE CAP	AUG	-	-	-	-	-	s	-	-
CC	CONTAINMENT			OWN	-	-	-	-	-	-	-	-
				PRE	-	-	-	c	-	-	-	-
L-GC	I957156	PSI/VT/VT-113		ISI	-	-	-	-	-	-	-	-
GC-1	#156	AUG/VT/VT-113	TENDON GREASE CAP	AUG	-	-	-	-	-	s	-	-
CC	CONTAINMENT			OWN	-	-	-	-	-	-	-	-
				PRE	-	-	-	c	-	-	-	-
L-GC	I957157	PSI/VT/VT-113		ISI	-	-	-	-	-	-	-	-
GC-1	#157	AUG/VT/VT-113	TENDON GREASE CAP	AUG	-	-	-	-	-	s	-	-
CC	CONTAINMENT			OWN	-	-	-	-	-	-	-	-
				PRE	-	-	-	c	-	-	-	-
L-GC	I957158	PSI/VT/VT-113		ISI	-	-	-	-	-	-	-	-
GC-1	#158	AUG/VT/VT-113	TENDON GREASE CAP	AUG	-	-	-	-	-	s	-	-
CC	CONTAINMENT			OWN	-	-	-	-	-	-	-	-
				PRE	-	-	-	c	-	-	-	-
L-GC	I957159	AUG/VT/VT-113		ISI	-	-	-	-	-	-	-	-
GC-1	#159	AUG/VT/VT-113	TENDON GREASE CAP	AUG	-	-	-	-	-	s	-	-
CC	CONTAINMENT			OWN	-	-	-	-	-	-	-	-
				PRE	-	-	-	c	-	-	-	-
L-GC	I957160	AUG/VT/VT-113		ISI	-	-	-	-	-	-	-	-
GC-1	#160	PSI/VT/VT-113	TENDON GREASE CAP	AUG	-	-	r	c	-	b	-	-
CC	CONTAINMENT	AUG/VT/VT-113		OWN	-	-	-	-	-	-	-	-
				PRE	-	-	-	c	-	-	-	-

Category, ItemNO, Class	Summary / CompID / System	Scope / Method / Procedure	Iso No. Comp. Desc. Code Case	Period 1			Period 2			Period 3	
				97	99	00	02	03	05	06	08