21.6 CONCLUSIONS SUMMARIZED IN THE FORM OF CPETS

The results of the previous three sections are summarized in Figures 21.6-1 and 21.6-2. These are the final results taken up by the Level 2 PRA towards (a) assessing containment performance in terms of containment decay heat removal systems availability in the long term (the "Transfer to CSET" outcomes) [CPETs and CSETs are combined into CETs in the Revision 2 Level 2 PRA], and (b) defining release categories for use in Level 3 PRA (the "CF EVE" outcome"). As indicated, all other outcomes are Physically Unreasonable (PU) and not worthy of further pursuit in the main PRA frame. A few further words about these two kinds of outcomes may be in order.

In ROAAM we acknowledge that when the basis of evaluation is epistemic, probabilities are subjective, and quantification of such probabilities cannot be done, in substance, any other way but in terms of definitions that themselves are of subjective/epistemic character. Thus a numerical probability scale is used only for the purpose of propagating uncertainty, and we insist that the end results be only interpreted in terms of the same probability scale (see Table 21.6-1) applied in reverse. This kind of procedure was used in all previous applications of ROAAM (as enumerated in Subsection 21.2), and such a qualitative interpretation of the end results was found to be appropriate and sufficient.

In the present case the situation is simpler and the results are even more robust in two ways: (a) for all potential containment threats, strongly bounding arguments could be made at a level of generality, and margins that obviated the need for propagation of uncertainty, and (b) according to the ROAAM "quality of evaluation" criteria (see Table 21.6-2), all assessments could be made in a manner that is independent of scenario details, thus yielding the most desirable, highest-confidence level, Grade A.

The CF EVE outcome (containment failure by ex-vessel steam explosion) is assumed in light of the large uncertainties that would have to be addressed if a claim was to be made to otherwise. While we feel that in the frame of ROAAM this could not be effectively accomplished, it may be worth pointing out that other levels of treatment have been proposed and accepted by the US NRC (i.e. the ABWR SSAR) argued that such a failure was not risk-significant. This line of argumentation and related parametric/sensitivity studies can be found in Section 9 of NEDC-33201P [NEDO-33201]. As indicated this outcome pertains to a deeply flooded LDW and reflects less than 1% of the CDF [approximately 7% in PRA Revision 4]. It is important to recall that this low incidence rate of such scenarios was engineered as part of the ESBWR SAM precisely for this reason.

Failure of deluge supply to BiMAC is taken as physically unreasonable on the basis of the specified very reliability of the active system, which is further backed up by a diverse and passive system. [The diverse/passive deluge system has been deleted with the implementation of squib-actuated valves in the deluge system as described in ESBWR DCD Tier 2, Section 6.3.2.7.]

Table 21.6-1
Definition of ROAAM Probability Levels
(Theofanous, 1996)

Process Likelihood	**Process Characteristic**
1/10	Behavior is within known trends but obtainable only at the **edge-of-spectrum** parameters.
1/100	Behavior cannot be positively excluded, but it is **outside the spectrum** of reason.
1/1000	Behavior is **physically unreasonable** and violates well-known reality. Its occurrence can be argued against positively.

Table 21.6-2
Definition of ROAAM Quality Grades
(Theofanous, 1996)

Grade A	Framework characterized by a simple, limiting process, evaluated on basic physical laws, with appropriately bounding inputs. **No scenario dependence.**
Grade B	Framework involves a single complex process evaluated at a high confidence level. There may be **slight scenario dependence** compensated by appropriate quantification of intangibles.
Grade C	Framework involves sequence of processes. **Significant scenario dependence** compensated by appropriate choice of intangibles and splinter scenarios.

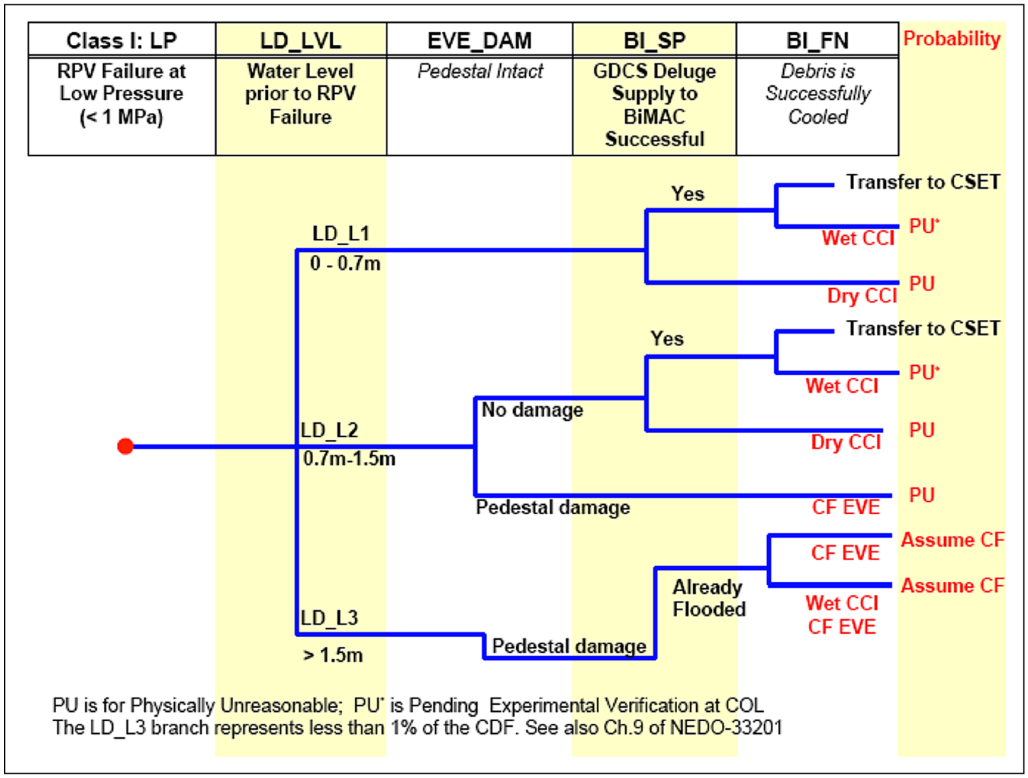

Figure 21.6-1. The Class I Accident CPET

The Class I accident CPET is quantified in the manner described in the text.

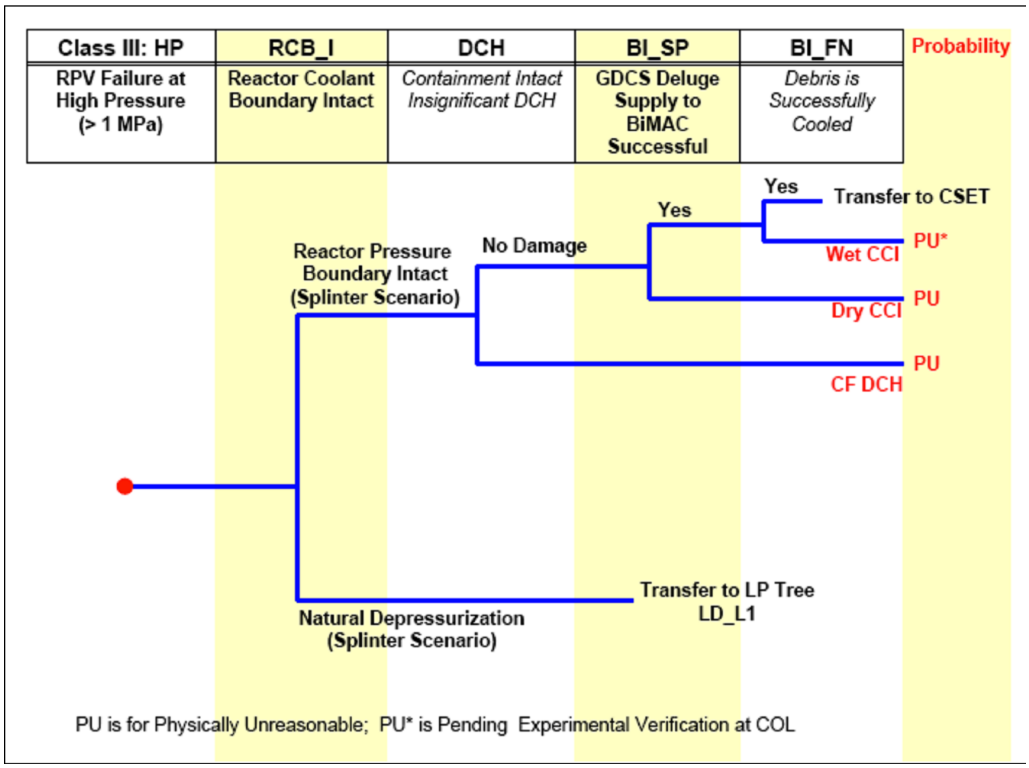

Figure 21.6-2. The Class III Accident CPET

The Class III accident CPET is quantified in the manner described in the text.

Table 21.6-3

Summary of Containment Threats and Mitigative Systems in Place

Threat	***Failure Mode***	***Mitigation***
DCH	*Energetic DW Failure*	*Pressure Suppression Vents Reinforced Concrete Support*
	UDW Liner Thermal Failure	*Liner Anchoring System*
	LDW Liner Thermal Failure	*Reinforced Concrete* *BarrierGap Separation from UDW*
EVE	*Pedestal/Liner Failure*	*Dimensions and Reinforcement*
	BiMAC Failure	*Pipe Size and Thickness* *Pipes Embedded into Concrete*
BMP & CCI	*BiMAC Activation Failure*	*Sensing & Actuation Instrumentation* *Diverse/Passive Valve Action*
	Local Burnout	*Natural Circulation*
	Water Depletion	*Natural Circulation*
	Local Melt-Through	*Refractory Protective Layer*

21.6.1 References

21.6 -1 Theofanous, T.G. (1996), "On the Proper Formulation of Safety Goals and Assessment of Safety Margins for Rare and High-Consequence Hazards," Reliability Engineering & Systems Safety, 54 (1996) 243–257.

21.6 -2 Theofanous, T.G. (2003), "Risk Assessment and Management," Ch.19 in Vol.1 in "Comprehensive Structural Integrity", 10-Volume Handbook, Eds. I. Milne, R.O. Ritchie, B. Karihaloo, Elsevier.