Official Transcript of Proceedings

NUCLEAR REGULATORY COMMISSION

Title: Advisory Committee on Reactor Safeguards
ESBWR Subcommittee on North Anna COLA

Docket Number: (n/a)

Location: Rockville, Maryland

Date: Thursday, June 18, 2009

Work Order No.: NRC-2904 Pages 1-260

NEAL R. GROSS AND CO., INC.
Court Reporters and Transcribers
1323 Rhode Island Avenue, N.W.
Washington, D.C. 20005

(202) 234-4433

UNITED STATES OF AMERICA

NUCLEAR REGULATORY COMMISSION

+ + + + +

ADVISORY COMMITTEE ON REACTOR SAFEGUARDS

(ACRS)

+ + + + +

MEETING OF THE ESBWR SUBCOMMITTEE ON THE

NORTH ANNA COLA

+ + + + +

THURSDAY,

JUNE 18, 2009

+ + + + +

ROCKVILLE, MARYLAND

+ + + + +

The Subcommittee met at the Nuclear Regulatory Commission, Two White Flint North, Room T2B3, 11545 Rockville Pike, at 8:30 a.m., Michael Corradini, Chairman, presiding.

ACRS MEMBERS:

MICHAEL CORRADINI, Subcommittee Chairman

SAID ABDEL-KHALIK, Member

J. SAM ARMIJO, Member

MARIO V. BONACA, Member

DENNIS C. BLEY, Member

MICHAEL T. RYAN, Member

ACRS CONSULTANTS:

THOMAS S. KRESS

GRAHAM B. WALLIS

ACRS STAFF PRESENT:

CHRISTOPHER BROWN

TABLE OF CONTENTS

ITEM PAGE

Opening Remarks/Objectives 5

Introductions 7

Opening Comments 9

Introduction

FSAR Chapter 1 14

SER/OI Chapter 1 42

I & C

FSAR Chapter 7 64

SER/OI Chapter 7 66

Reactor

FSAR Chapter 4 78

SER/OI Chapter 4 80

HFE

FSAR Chapter 18 96

SER/OI Chapter 18 97

Engineered Safety Features

FSAR Chapter 6 116

SER/OI Chapter 6 140

Safety Analysis

FSAR Chapter 15 155

SER/OI Chapter 15 159

Quality Assurance

FSAR Chapter 17 174

SER/OI Chapter 17 190

PRA

FSAR Chapter 19 198

SER/OI Chapter 19 218

Electric Power

FSAR Chapter 1 234

SER/OI Chapter 8 243

P-R-O-C-E-E-D-I-N-G-S

8:30 a.m.

CHAIRMAN CORRADINI: This meeting of the Advisory Committee on Reactor Safeguards, it's the Subcommittee on ESBWR. My name is Mike Corradini, Chairman of the Subcommittee.

Subcommittee members in attendance are Said Abdel-Khalik, Sam Armijo, Mario Bonaca, Dennis Bley, Mike Ryan and -- I'm trying to make sure I didn't miss anybody here, and our consultants, Tom Kress and Graham Wallis.

The purpose of the meeting is to review selected chapters of the Draft SER associated with the North Anna reference combined license application to the ESBWR design certification, referencing the ESBWR design.

The Subcommittee will hear presentations by and hold discussions with representatives of the NRC staff and the applicant, Dominion, regarding these chapters.

The Subcommittee will gather information, analyze relevant issues and facts and formulate proposed positions and actions, as appropriate for deliberation by the full Committee.

Chris Brown is the Designated Federal

Official for this meeting. The rules of participation in today's meeting have been announced as part of the notice of this meeting previously published in the Federal Register on May 28, 2009 and a transcript of the meeting is being kept and will be made available, as stated in the Federal Register notice.

It's requested that speakers for identify themselves and speak with sufficient clarity and volume, so they can be readily heard.

We've not received any requests from members of the public to make oral statements or written comments. My understanding is, there's a bridge line with a variable number of people coming and going on it. Is anybody there at the moment?

MR. BOLIA: Yes, this is Chip Boia with GEH.

CHAIRMAN CORRADINI: Okay.

MR. BAGNAL: And Charles Bagnal with GEH.

CHAIRMAN CORRADINI: Okay, so, just sit tight and you're our life-line, when somebody calls on you. Other than that, you can listen.

I will note for the Subcommittee that yesterday, we had our -- one of our follow-up Subcommittee meetings -- and audience, our follow-up Subcommittee meetings for the ESBWR/DCD, where we're

now going back over the issues we had identified in our interim letters, and yesterday was about containment.

Today is the start of the COL process for North Anna and we're going to probably hear as much about process to begin with, as we hear about the particular COL, since we are all new to this whole process of Combined Operating License and essentially, by reference, going back to the reference design and this one, being the ESBWR.

So, I'll proceed with the meeting and ask Tom Kevern, Senior Project Manager of the NRC to kick it off. Tom.

MR. KEVERN: As Dr. Corradini said, my name is Tom Kevern. I'm the lead Project Manager for North Anna COLA application and before we have some opening remarks, I'd like to give you a brief staff overview.

The staff is concluding it's a safety evaluation report with open items for the North Anna COLA application. It will be the standard 19 chapters. Today, we're going to cover the nine chapters you see on the screen.

We have provided chapters in advance and I note that as of today, those -- or as of a week or so ago, the chapters are publically available in ADAMS,

so, for members of public or whoever has access to those.

We will be back to see you folks again July 21st and 22nd for the Subcommittee meeting, to cover additional chapters.

This staff's SER is based upon the latest revision that was provided to us by Dominion, December of last year. That is Revision 1 and a phrase you're going to hear probably a number of times today, incorporate by reference, Revision 1 of the COL application does incorporate by reference Revision 5, which is the current revision of the ESBWR design control document and also, incorporate by reference, the early site permit that the Commission issued November of 2007.

This is milestone. Take a moment to pause on that. This is the first COL application that the staff is presenting to ACRS. Because of that, I expect that we'll have some lessons learned that we wish to incorporate through future meetings. We'll attempt to incorporate whatever comes out of today, to make the follow-on meetings for both Dominion, as well as for other technologies, more expeditious and meet HRS's needs.

For the presentation sequence today, each

of the chapters is going to follow the same sequence we initially had. Dominion will present the content of the FSAR, followed by the staff's presentation of the evaluation of the chapter, the FSAR.

Our presentations are going to summarize, since you've had those in advance, we're going to summarize the kinds of SER and then specifically discuss any key issues that we've found in that -- our evaluation of that chapter, and that's it for my opening remarks. Any comments or questions before we proceed on?

All right, thank you. Then I'd like to introduce Gene Grecheck who is Dominion Vice President responsible for North Anna 3. Let's see, did I do this correctly?

MR. GRECHECK: Good morning. I'm Gene Grecheck, Vice President Nuclear Development for Dominion and first, I want to say that it's our pleasure and privilege to be here for the first COL presentation to the Committee.

North Anna has been before the Committee before. We have, as Tom mentioned, we have an early site permit, which the Commission issued back in 2007. So, about this time four years ago, we were here at the Committee presenting the early site permit

application and we're pleased to be here today, to talk to you about the COL.

You can see the time line there, so, North Anna has been before the Commission for quite some time. The ESP application was submitted back in 2003 and we've been working through that over the last several years.

The application that you are looking at now was submitted on November 27, 2007. The Draft EIS has been issued by the staff and we've updated the application right at the end of last year.

I thought I'd just take a couple of minutes before we get into the detail of the application, just to re-orient you as to the site. The site is not too far away from here. This is North Anna. It's in Central Virginia on Lake Anna, maybe 90 miles or so from Washington.

That drawing as you see in front of you is the 50 mile circle and we can see that it incorporates the City of Richmond down in the southeast and then some of the smaller cities in Central Virginia, Charlottesville and Fredericksburg are also within the zone, but it's located there now.

At that site, there are two operating units that have been there since 1978 and 1980. Those

are Westinghouse 3-lube pressurized water reactors. The lake is a man-made lake that was damned in 1972. The company owned all the land underneath that lake. It was all purchased for the purpose of creating a cooling water facility for what was originally proposed to be four nuclear units.

Two of those were built. There were two others that started construction in the late 1970's and then --

CONSULTANT WALLIS: Does that lake go down in the summer?

MR. GRECHECK: Does it go -- it varies very slightly. There's a target level of 250 feet above sea level and it typically varies in the seasons. It normally stays around 250 and --

CONSULTANT WALLIS: When it really dries, does it go down a lot?

MR. GRECHECK: It goes perhaps, two feet.

CONSULTANT WALLIS: Only two feet?

MR. GRECHECK: At 248 is what we consider to be a drought contingency point and we reduce the outflow over the dam at that point and pretty much stabilize them.

There was a drought in Central Virginia about three or four years ago and at that point, I

think it reached about 245, but that's the extent.

Here's a view of the site itself, as it is planned. The yellow that you see on this diagram is the existing station. So, up right in the center, right here, is units one and two and the Unit 1 and 2 turbine building. Unit 3 is this complex right over here.

As you have probably read, Unit 3 will not be using the lake for cooling. Unit 3 uses a cooling tower process. This are the cooling -- this is a hybrid wet system and a dry cooling tower complex right here.

So, the plant was actually moved away from Units 1 and 2 and closer to the cooling tower site, in order to eliminate the pressure losses in the circulating water system.

CHAIRMAN CORRADINI: Had it always been the case, Gene, that the 3 and 4 -- or was it a recent engineering change, to not use the lake?

MR. GRECHECK: Three and four, in the original incarnation, as they were issued construction permits back in the 70's, were -- used exactly the same cooling system as one and two.

During the early site permit process though, we determined that the impacts on the lake and

the downstream river were in excess of what the State of Virginia was willing to discuss with us. So, at that point, we changed to a cooling system.

CHAIRMAN CORRADINI: This is just make-up water from the lake?

MR. GRECHECK: That's correct. Here's an artist's conception of Unit 3. On the left-hand side, there again, is the cooling tower complex. Directly in the middle of the picture is the ESBWR with the reactor building on the left and the turbine building over on the right and there is also a service water cooling system that you see right over on the right-hand corner.

Finally, I just want to introduce the Dominion and GEH team here. We have a number of people, and I won't go through all the names. Gina Borsh, here on my right, will be leading the discussion for most of the morning.

Gina is the consulting engineer in our licensing organization and is responsible for the day-to-day operation of our license application. So, she'll lead us through the discussion.

We also have a number of people from GE Hitachi here that can answer your questions. Some of them, you've probably met yesterday and then a number

of people from Bechtel, Enercon and Excel who have been working with us on the application.

So, we look forward to a productive day with you today and hope we can answer all your questions and let's get started.

CHAIRMAN CORRADINI: Questions by the Committee for Gene?

MR. KEVERN: Thank you, Gene, then we are ready to start in on chapter one and as I said earlier, the sequence is going to be the same for all. We'll start with chapter one, presentation by Dominion, and then followed by the staff's.

MS. BORSH: Good morning. Sorry, we're just getting oriented here. Thank you all for the opportunity to present our COLA to you. We really appreciate this. I also want to thank Tom Kevern and the NRC staff. You all have done a lot of work and we're very grateful for the efforts you put out to get us to this point today.

All right, so, let's start with Chapter 1. For Chapter 1 I'm going to -- Chapter 1 is a unique chapter because it's an introduction to the rest of the FSAR. So, for Chapter 1, I'm going to talk a little bit about the COLA structure, the concept of incorporate by reference and using -- and supplemental

information that's put into the FSAR.

I also give you an example about left margin annotations and how we use those and then I'll give you an overview of the Chapter 1 content and very briefly, summarize the open items that are in the SER and then I'll turn it over to Tom. I'm sorry, I'm going to turn it over to Janelle, I think, for the Chapter 1 presentation.

Our COLA is structured like many other COLA's in new plants, in 10 parts. Part one contains general and administrative information. It's mostly financial information.

Part two contains the FSAR. Part three contains the environmental report. Part four is our technical -- our plant specific technical specifications, which are based on Chapter 16 of the DCD, which are the DCD generic ESBWR tech specs.

Part five has our emergency plan and our evacuation time estimates in it. We didn't use Part six for the North Anna COLA. It wasn't needed. Part seven is the Departures Report. I'll talk a minute about this.

The Departures Report describes and summarizes the variances, the exemption requests and if we had any departures from the DCD, those

departures.

A departure is a plant specific deviation from the design information that's in the design -- in the standard design certification. As I said, we have none for the North Anna COLA. So, you won't see any of those in the Departures Report.

A variance is a deviation from either the early site permit or from the FSAR that's in our ESP application. We do have 15 variances in our application and we'll cover those as we go through the chapters in which they're discussed.

MEMBER ARMIJO: Are those variances in the Departure Report or in a different part?

MS. BORSH: They show up in two ways. In the FSAR, you'll -- and we'll see it in Chapter 15, I'll show you an example.

In the FSAR, we will put information in the FSAR that is text, that is different from the information that's in the ESP or in the SSAR, but we explain -- and then it has a number. It's identified with a unique identifying number in the left margin, and then you go to the Departures Report, Part 7, and you look in there for an explanation of the departure, why we had to take it and the justification as to why it's acceptable, okay.

Exemption requests. We have two exemption requests in our application and they relate to the technical specification. They're fairly minor, but they're also explained in the Departures Report, and we'll talk more about those when we get to Chapter 16 of the FSAR on a later meeting, all right.

Part eight contains our security plan. We did not use Part nine and Part 10 incorporate Tier 1 of the DCD and it adds supplemental plant specific ITAAC. Okay, any questions on that?

All right, let's talk about incorporate by reference. As Tom was saying, we have, in our FSAR, incorporated by reference, the ESBWR DCD.

In 10 CFR 52.79(d) there's a part that states that the final safety analysis report need not contain information or analysis submitted to the Commission in connection with the design certification provided, however, that the final safety analysis report must either include or incorporate by reference, the standard design certification final safety analysis report, and that's what we've done in our FSAR for North Anna.

Now, we recognize that the ESBWR/DCD hasn't been certified yet by the NRC, but we also recognize that 10 CFR 52.55(c) allows us to take on

the risk of adopting a design that has not yet been certified.

As Tom said earlier, we've incorporated the latest version of the DCD that is under NRC review, which is Rev 5. It's reflected in our FSAR Rev 1, and we continue to keep our FSAR updated to reflect any revisions that GE submits in their design certification and we also recognize that one the final rule making occurs, we'll probably have to make some additional changes to our FSAR and we'll follow through with that.

In addition to IBR in the DCD, we also incorporate -- I'm sorry, IBR is incorporate by reference. We are also incorporating the SSAR that comes from our ESP application and that's also required by 10 CFR 52.

Finally, we incorporate various NEI templates by reference, because they were written to support the FSAR, for example, the maintenance rule and we'll be talking a little bit about that later and it's those documents that are also incorporated by reference, okay.

Now, in addition to incorporating those other documents by reference, we added supplemental information, text that you see on the FSAR pages when

you review our FSAR.

MEMBER BLEY: Can I back you up one?

MS. BORSH: Of course.

MEMBER BLEY: The main things that you're doing by IBR are kind of fixed things, you're old SSAR, the design cert.

What I don't know is, are the NEI templates in some fashion, fixed the same way?

MS. BORSH: That's a very good question. I'm sorry I didn't say anything about that. Yes, actually, all the templates that we're incorporating have been submitted or -- have been submitted to the NRC for review and approval and the NRC issues and SER for that template and the template is actually approved by the NRC.

So, they are fixed in time. They're always subject to change and we adopted revisions, but yes.

MEMBER BLEY: They have, at this time, been approved?

MS. BORSH: Some of them have been approved. Some of them have not been approved and we note in our FSAR, if an application -- if a template has not been approved by the NRC, we say, "This template is currently under NRC review."

MEMBER BLEY: Okay, is staff going to talk about this?

MS. BORSH: Yes.

MR. KEVERN: Staff will address that.

MEMBER BLEY: Okay.

MR. KEVERN: By the way, most of those are in Chapter 12. My memory fails me. I do not believe any today in the nine chapters.

But we will identify that we -- yes, we either are in the process of reviewing those templates or the review is complete and identified for the readers, what the ADAMS number is of our safety evaluation report, and that the review is still ongoing and will be identified in an open item in our review of North Anna.

MEMBER BLEY: Okay.

MS. BORSH: You'll see one in Chapter 17 that relates to -- we didn't incorporate a reference, but it's a QA topical that we use to base the description of our QA program. So, we'll talk a little bit about it there.

All right, so, in Part 52.79(a) requires us to submit information that describes the facility, presents the design basis and the limits on its operation and presents a safety analysis of the

structures, systems, and components of the facility as a whole.

The regulation also states that a COL application that references a certified design must also contain the information and analysis required to be submitted within the scope of the COL application, but which is outside the scope of the DCD. There are similar provisions in 52.79 for the SSAR and the ESP.

In order to meet these requirements, we had to add information to the DCD and the ESP SSAR to make a complete FSAR and normally, the information that's been added, the text that you see on the page is added to address a COL item from the DCD or a COL action item from the early site permit or an early site permit permit condition that's listed in the permit.

Then we've also added information to replace conceptual design information that's in the DCD with site specific/plant specific design information, and then finally, sometimes we had to add supplemental information to address either NRC regulations or NRC guidance, for example, in acceptance --

CONSULTANT WALLIS: How detailed is this design information? I mean, conceptual design

information can be vague.

MS. BORSH: Yes.

CONSULTANT WALLIS: We simply have a box that does something.

MS. BORSH: Yes.

CONSULTANT WALLIS: But are you going to get down to the sizes of pipes and you know, the power requirements and all the details of what you need?

MS. BORSH: Well, what we've done is we've - the NRC has issued guidance in Reg Guide 1.206 and of course, they have their SRP's that they use to do the reviews and we use that guidance, along with any REG guides that are applicable to a specific system, and developed our information and the level of detail that's required by the guidance.

CONSULTANT WALLIS: By them, yes, because sometimes, if you don't do enough detail, you find you get stuck later on with something, which you know, it has to be worked out.

MS. BORSH: Right.

CONSULTANT WALLIS: And then it may be complicated.

MS. BORSH: Right, and generally, what you'll find when we get to those chapters, like in Chapter 9 we have -- sorry, Chapter 10, we have some

of that information. You'll see that the level of detail is approximately the same level of detail that you see in the DCD, for a particular system.

CONSULTANT WALLIS: Okay, well --

CHAIRMAN CORRADINI: It's no more than -- can I bound your question?

MS. BORSH: Yes.

CHAIRMAN CORRADINI: It's not more detailed than what we see in the DCD, I expect.

MS. BORSH: Generally, yes, I think that's right.

CHAIRMAN CORRADINI: That's probably true, good. Does that answer your question?

CONSULTANT WALLIS: Well, it raises a question for the future, I think.

CHAIRMAN CORRADINI: But I just wanted to make sure that it's answered.

CONSULTANT WALLIS: Yes.

MS. BORSH: I understand your concern.

CONSULTANT WALLIS: Thank you.

MS. BORSH: Any other questions about it? Okay, left margin annotations, if you all looked at our FSAR's, I'm sure you have, you'll see that in the left margins, we have these cryptic annotations and Chapter 1 explains them. This table, or a version of

this table appears in Chapter 1 of our FSAR and I'll just go through it very briefly, the first row under the headings, as an example of what this means.

So, if you see the row that says {STD} or {NAPS} COL X.Y-#-A, you'll see over in the explanation column, it says, "This FSAR information has been added to address a DCD COL item that is either common for all parallel applicants or plant specific."

If it was standard, meaning identical information was used in all of the ESBWR COLA's, then we put STD next to it.

If for any reason, there is any kind of a difference between the information that is in our COLA versus what was in the subsequent COLA's, it would say NAPS, for North Anna Power Station and then this COL number -- the COL term means that this item -- this information was added to specifically address a DCD COL item.

Last part of this annotation, X.Y-#-A is the specific DCD COL item number. So, you can cross-reference it and see what we're addressing there, okay, and the other annotations follow a similar format.

MEMBER ABDEL-KHALIK: So, future applications have to go along with anything that's

labeled standard?

MS. BORSH: Not necessarily. The way it works is that what we did when we assigned the label STD or NAPS, we looked at the information and we said, "Reasonably, we'd want to expect that future applicants would adopt the same information," okay, that it would be standard for all, because we're all trying to standardize. It's a general effort in the industry.

If we thought that it was likely, and of course, we're working with Grand Gulf and Detroit Edison at the time and River Bend, we would discuss it, and say, "Yes, this should be standard." We expect that most people will adopt it.

If, however, a new plant comes in, a new ESBWR COL applicant and they say, "We don't want to adopt that information," although what they'll do is, they would identify the information in their application as plant specific and say -- and inform the NRC that they're not adopting what is in the article.

MEMBER BLEY: Even if though the path to the DCD?

MS. BORSH: Well, this is not about reverting back to --

MR. HICKS: This is not DCD text, yes. It's a supplemental .

MS. BORSH: Yes.

MEMBER BLEY: Yes, but I -- you're the first one.

MS. BORSH: Right.

MEMBER BLEY: So, you can it standard and it's not -- it's a change to the DCD, right?

MS. BORSH: No, it's not a change. It's supplemental -- okay, here's the --

MEMBER BLEY: It's supplemental to the DCD.

MS. BORSH: Right, we change -- in the North Anna COLA, it just so happens for our COLA, we changed zero in the DCD. We did not change any DCD content, no departures.

If we had taken the departure, we would have identified -- it most likely would have been identified as North Anna specific --

MEMBER BLEY: Okay.

MS. BORSH: -- because the DCD is suppose to be standard.

MR. HICKS: The term standard is not, in this context, is not related to the DCD. It's related to COLA, the text, right.

MEMBER BLEY: So, there will be a history

of all of these COLA's in order, so that one --

MR. HICKS: It's mainly to help staff, when they get an S-COLA to review, they see it as a standard content. They've already reviewed it. So, it's site specific annotation and then they know they have to review it for the S-COLA.

MEMBER BLEY: Okay.

MS. BORSH: Does that answer your question?

MEMBER ABDEL-KHALIK: If that is the case, then what is the logic for you, as the first application, to label anything as NAPS?

MS. BORSH: Because some of the information, we know is going to be site specific. For example, in the tech specs, we have to describe the plant location. Well, you know, so -- but we did try to and we made a huge effort with Grand Gulf and then River Bend and Detroit Edison, to try to standardize as much as possible, so that we really are coming up with standard licensing basis, for ESBWR and of course, we were working with GEH too, through the DCD effort. No advantage, we're just nice guys.

Okay, so, Chapter 1 content. We go -- we talk about the general plant description and here, we incorporate the DCD by reference and then we replace some of the conceptual design information that's in

the DCD with plant specific design information. There's a little bit of that in there, but it's mostly an overview.

We identify the agents and contractors that are working on North Anna 3. For us, at North Anna, Dominion and ODEC, Old Dominion Electric Cooperative, we are the owners. We are going to -- we are the applicants for the North Anna COL application.

CHAIRMAN CORRADINI: The Cooperative is west of the service area Dominion, physically located where?

MR. GRECHECK: The Cooperative is a group --

CHAIRMAN CORRADINI: You're going to have to go to a mic and identify yourself, I'm sorry.

MR. GRECHECK: Hi, this Gene Grecheck with Dominion. The Cooperative is a group of nine or so local electric cooperatives in Central Virginia. So, they range from Northern Virginia, here down through the central part of the state. So, the service territory is pretty much across the state in little pieces.

CHAIRMAN CORRADINI: And that's an 18 percent share?

MR. GRECHECK: 11.6.

CHAIRMAN CORRADINI: Thank you.

MS. BORSH: All right, GEH, as you know, is the ESBWR DCD COLA -- I mean, it is taken care of the DCD for us and also, it's suppose to be coined the ESBWR at North Anna.

Bechtel is responsible for licensing support and for site engineering for the information that's out -- or the systems that are outside the scope of the DCD, and then there are some other contractors listed there, that have helped us in specialized areas, like with our borings and things like that.

We make references to drawings that are tables in Chapter 1, that list the electric and mechanical drawings that we've added for the plant specific systems that are in our FSAR. We talk -- we have pointers to the interface information that is in our FSAR.

So, for example, in Chapter 1, we have a table that points to Chapter 2, that says, if you want to see the information that demonstrates how the site characteristics fall within the ESBWR DCD site parameters, go look in Chapter 2 and you'll find that information there.

Chapter 1 -- I'm sorry, Section 1.9

summarizes our conformance with the NRC guidance documents. Then we have some tables that address the technical resolutions of items that were assigned, that are outside the scope of the DCD and were assigned to the COL applicant to address in the FSAR. So, we do that.

CONSULTANT KRESS: Is there a list of issues that somebody has put together?

MS. BORSH: Yes, it starts in the DCD and then we follow up on and supplement it in our FSAR, in Chapter 1.

CONSULTANT KRESS: These don't have anything to do with the plant. They have to do with the site?

MS. BORSH: Well, there's a combination, actually, of information and we can certainly, if you want to, we can go over.

CONSULTANT KRESS: It's not necessary. I'll just read the list and the chapter.

MS. BORSH: Okay.

CONSULTANT KRESS: Read it through.

CHAIRMAN CORRADINI: If I might ask the question differently for that one and the TMI items. These are standard requirements by staff that you will list and we will see in other COL's, but they will

probably not change from site to site, and application to application?

MS. BORSH: Some of them, the way we've identified them, I think they're all site specific. They're all North Anna specific, aren't they?

MR. HICKS: I think so, yes.

MS. BORSH: But I can look that up for you, if you'd like. All right, we also discussed the impact of constructing Unit 3 on Units 1 and 2, and we described the managerial and administrative controls that we're going to have in place, to assure that there is no adverse impact on the safety related structure systems and components of Units 1 and 2.

Then we have some more responses to TMI items. This is similar to the bullet two items above, and we address industry operating experience that was outside the scope of the DCD and is plant specific, okay.

CONSULTANT KRESS: When you talk about industry operating experience or an ESBWR, what are you talking about, other BWR's?

MS. BORSH: It could be all kinds of things. You know, it could be --

CONSULTANT KRESS: It could be a PWR?

MS. BORSH: Right, and it could be

training. It could be program. There are --

CONSULTANT KRESS: I understand.

MS. BORSH: Yes.

MR. HICKS: Things are communicated in generic communications from the staff.

CONSULTANT KRESS: Yes, okay.

MS. BORSH: Finally, the SER with open items has four open items for Chapter 1. The first open item is tracking certification, actually, rule making of the design certification.

The second item is tracking the construction impacts on Units 1 and 2, which I just talked about. The staff is still evaluating that information.

The third item is track -- the NRC issued an RAI to us that said, "We need your contract number, your DOE contract number for disposal of high level radioactive waste and spent nuclear fuel." So, we have to submit that information to NRC.

CHAIRMAN CORRADINI: What does that mean? I read that one and I didn't understand it.

MS. BORSH: We have a contract that we maintain with the Department of Energy for disposing of high level --

CHAIRMAN CORRADINI: Oh, so, it's

essentially a reference to a current contract?

MS. BORSH: Right.

CHAIRMAN CORRADINI: Okay.

CONSULTANT WALLIS: This is the contract where it says that they will take the stuff which they have never --

MS. BORSH: Yes, but they're working on it.

CONSULTANT WALLIS: I know, but they've been working on it for some time.

MS. BORSH: Yes, yes.

CONSULTANT KRESS: You already have all the site stories at that site? At the other two plants, you have all the site stories and --

MS. BORSH: Yes, we do.

CONSULTANT WALLIS: You must be planning on dry cost storage for a long time?

MS. BORSH: For us, we -- I don't know what our capacity is and if I can tell you in years.

CHAIRMAN CORRADINI: But Dan, I apologize for slowing you down, but to answer your question, that was essentially a reference number, so that they have the number for the contract.

MS. BORSH: Correct.

CONSULTANT WALLIS: But you do have to plan ahead for storage on site.

MS. BORSH: Yes. Well, we have not, in our FSAR, we have not committed to a long term storage facility, but we certainly have that option, just like right now, where we have --

CONSULTANT WALLIS: You certainly have the space, if you need it.

MS. BORSH: Yes, right.

CHAIRMAN CORRADINI: Keep on going.

MS. BORSH: Okay, and the last open item is an RAI -- we have to answer an RAI that the NRC sent to us about the licenses that we requested to receive, posses and use source, byproduct and special nuclear material. That's it for me.

MEMBER ABDEL-KHALIK: If I were to look at the very first sub-bullet, in your last slide -- sorry, the very first SER for the ESBWR design certification, whatever resolution is ultimately reached, with regard to those open items, you will automatically accept.

MS. BORSH: Yes, because by definition, that means that we have come to some agreement on them. What you'll see is that most of the open items that are in the SER are tracking RAI's that the NRC has issued to Dominion and until the NRC accepts are response, we're in negotiation.

MEMBER ABDEL-KHALIK: But whatever ultimately comes out of that process --

MS. BORSH: Yes, we accept it.

MEMBER ABDEL-KHALIK: You have committed to accept that?

MS. BORSH: Yes.

MEMBER ABDEL-KHALIK: Even if it were to include design changes?

MR. EUDY: This is Mike Eudy. I think he's referring to what happens with the open item 1-1/DCD.

MEMBER ABDEL-KHALIK: Well --

MS. BORSH: Yes, we have to --

MR. EUDY: That's what you're talking about, correct? You're talking about the open item DCD --

MEMBER ABDEL-KHALIK: That's a COL open item, that's just a tracking item. I'm talking about the DCD open items.

MS. BORSH: Yes, what we'll do is, we'll either have -- when the DCD is certified and all of that is closed out, we will adopt the DCD. We'll incorporate it by reference and if, for whatever reason, if we cannot implement that change at North Anna, then we would take a departure or ask for an exemption request and that information would be

presented to the NRC for review.

MEMBER ABDEL-KHALIK: I'm just trying to make sure that this is not an iterative process.

MS. BORSH: No, that's correct. When the DCD is done, we adopt it and submit the revised -- we'll submit an FSAR change that says, "We're now adopting Rev X of DCD or whatever that -- or the rule, whatever that happens to be," and the NRC will have to close out -- will review what we submit and close out the open item.

MEMBER ABDEL-KHALIK: Okay.

MR. KEVERN: If I could make a point of clarification, from the staff's perspective. That's why we've identified this. This is the huge open item 1-1 that we identify in Chapter 1 and you know, there have been thousands of RAI's, issued against the plant certification application.

Apparently, I don't have the number, several hundred that are still open, and that's what that open item 1-1 in North Anna, the COL review is suppose to indicate and it stays open until every last item is resolved, as far as the design certification review.

This is a key part of the parallel review process, so that we can -- the staff can review design

certification applications in parallel with reviewing COL applications against the design not yet certified.

So, we use those nomenclature of 1-1 and you'll see it with all the technologies and that is the big one and when it's -- when everything else is finally resolved in the design certification, that item is closed. The design is certified, assuming it is, and then we're ready to move on and look at the rest of it. If anything, it's still open, with respect to North Anna's application.

MEMBER ABDEL-KHALIK: Well, but my concern pertains to the fact that, you know, if you have hundreds of these open items and some of them, North Anna may find to be onerous or they do not agree with the methods -- with the method by which such an item had been resolved.

They may come back with an alternate resolution, but without looking at the impact of how this particular item will be resolved, as far as North Anna is concerned and --

MR. KEVERN: Actually, you're getting into --

MEMBER ABDEL-KHALIK: We're not sure whether or not it's appropriate.

MR. KEVERN: Yes, sir, and that's actually

one of the items that Gina is going to address in Chapter 1 and I'll take some of her thunder right now and talk about.

That's part of the design center review approach. In each of the technologies, it has a design center working group, consistent with the staff's direction and this is a collaborative effort, and I won't speak for them, but when we've had meetings, public meetings, conference calls, etcetera, that's exactly the type of topic that comes up.

Here is an issue that the staff has with respect to design certification and how is it -- and here's RAI and how is it going to be resolved? Well, it's not just GEH that responds. It's the collection of GEH, as well as the potential applicants for that design certification also.

MEMBER ABDEL-KHALIK: Okay, thank you.

MR. KEVERN: And it doesn't work perfectly, but so far, it's worked quite well, from the staff's perspective. Can I make one other transition item, please, before Janelle starts?

The last slide you saw that Gina provided, it's -- that is our list of open items and it's to show that we've had alignment between the staff's evaluation and Dominion.

We provided our SER in these nine chapters to ASRS three or four weeks ago. We also in parallel, provided that to Dominion for proprietary review. They have looked at it and the feeling of that last slide is that they concur with -- they understand that what we've got in the way of open items and RAI.

So, you'll see that throughout each of the chapters and that's the reason it's there, to show that they have received our safety evaluation reports, that they have received the RAI's if appropriate, and they understand what they are.

So, it's not their list. It's our list, but it's there to show that they understand what the status position is on each of these chapters, okay, thank you, and next, we'll have the staff presentation on Chapter 1, Janelle Jessie.

MR. DISOSWAY: Good morning. As Tom said, my name is Janelle Jessie. I'm a member of the NRC staff and I'll be presenting Chapter 1.

On the next slide, it's simply the names of the staff who helped with the review of Chapter 1. So, if you'll go to the third slide, we'll start there.

This slide shows the presentation outline of basically, the format that you'll see, the

presentations given this morning, presented to you. We won't go into much of the content detail, given that you heard a pretty accurate representation of that from the talk that Gina just gave.

Next slide, please. For regulations and review guidance, we'll begin with 10 CFR 52, Subpart C, which addresses the combined license application. More specifically, 10 CFR 52.79 gives the requirements for the technical content of the final safety analysis report. 10 CFR 52.83 addresses finality of referenced NRC approvals, which in this case, applies to the ESBWR design certification and as you all just heard from both Tom and Gina, the staff within that finality discussion, has captured the fact that the ESBWR DC is still under review by the staff and is incorporated by reference throughout the SER as open item 1-1.

Regulatory Guide 1.206 provides guidance to the applicant regarding the technical content of the combined license application and the staff uses the acceptance criteria in NUREG 0800 to evaluate the regulatory -- the content of Reg Guide 1.206. So, there is a direct correlation between the two.

The design-centered review approach, as Tom explained a few moments ago, is a Commission approved concept which supports the standardization of

combined license applications outside of the scope of the design certification.

So, essentially, an issue is brought up, it's reviewed once and it's applied to all of the applications that follow.

Next slide, please. On this slide, what you'll see to the left, you see a list of all of the parts of the application and adjacent to that, you'll see that's where the staff's evaluation of those parts are located.

Part two is -- it stands out. We've bolded that because that's what we're discussing today. Part two has the SER, that's safety evaluation report from the staff and there are 19 chapters, nine of which are going to be presented to you today and the remaining, which will be presented later in July and August. Next slide, please.

MR. KEVERN: Let me make a point of clarification on Part 7, please, in response to the part about variance. The right-hand column there is where we've documented the staff's reviews and the Part 7, where we're listing variances and you'll see that that is addressed.

We do not do a separate evaluation against Part 7. It's embedded in the appropriate chapter, one

of several and today, we'll have one example in Chapter 15, where there will be a variance identified. It's identified both in Chapter 15 of the FSAR, as well as in the aggregate collection of variances in Part 7 and we do evaluate that in the respective chapter of our SER.

MR. DISOSWAY: To the SER, the technical sub-sections have each been divided into six sub-parts and that's the SER format bullet that you identified, and those are the various parts that you'll find, and that's throughout the technical sections of the SER.

In addition, the working group amongst the staff has come up with template or boiler plate language, which has been used as a way to standardize both the technical evaluation sections and the conclusion section referenced above.

Next slide. This slide and the one that follows is simply recapping what Gina already explained to you, which is the content or this is sort of a table of contents, of what you'll find in Chapter 1.

Gina has already outlined what they provided and the purpose of putting it here was simply to bring up that the staff did to an independent review of this information. So, if you go to the next

slide, this is a continuation of that and basically, the staff found all the content acceptable, with the exception of the open item that Gina alluded to earlier.

Open item 1-2, which is the impact of construction activities on Units 1 and 2.

CONSULTANT WALLIS: Could you give me an example of something you did? I mean, let's look at new generic safety issues and Chernobyl issues. Could you pick one or two of those and tell us why their submission was acceptable or is that too much to ask? There's such a general level here, I can't tell what you did.

MR. KEVERN: Right, well, as I said earlier, we're trying to summarize it without going into detail of the SER. I can pull items out of the SER, but I just can't --

CONSULTANT WALLIS: Just give some indication of what you did, to make sort of the -- did something in -- is it in depth or is it a very sort of cursory review or what is it that you do?

MR. KEVERN: It's a combination. Let me try one example. Chapter 1 is really a combination of what's a laundry list of content. So, one of the bullets, I used the one that talks about regulatory

guidance. So, you'll find many pages --

CONSULTANT WALLIS: That's old stuff. I mean, new generic-X issues, maybe something where you have to place something new, which you haven't placed before, is there something like that that happened here?

MR. KEVERN: No, sir, it's what's listed in --

CONSULTANT WALLIS: It's all been through the IG's before?

MR. KEVERN: It's whatever -- well, by following the rules and following Part 52, the application is current as of the --

CONSULTANT WALLIS: Is that a --

MR. KEVERN: It doesn't expire until the middle of --

CONSULTANT WALLIS: But I would have no idea of the depth of your investigation. I'm not criticizing. I'm just saying that this is the position you put me in, when you just give me a list of stuff like this.

MR. KEVERN: In the presentation, it's a list. In the SER, we believe we've documented --

CONSULTANT WALLIS: Well, that seems to be pretty skimpy too.

CHAIRMAN CORRADINI: Let me try an example to -- I think I see where Graham is going. Can you -- can you let me have some background, or maybe you're going to do this later, a couple slides later, on the one that's bold, because that one, I guess I want to understand.

MR. KEVERN: Let me use that as an example then. One of the items in the Reg Guide 1.206 is that the application has to include a -- the means by which the application, or the applicant rather, will construct the proposed unit, presuming a license is granted, without having any safety impact on the existing units.

If you look on the FSAR and there are several pages of information, primarily, it's commitments to do things in the future. There's a whole series of administrative controls, some of which they currently have in place, many of which will be specifically for new construction for the plant next door, that -- the location that Mr. Grecheck identified earlier.

It's not within the protected area of Unit 1 or Unit 2, but it's all on the same site and it's not too far a distance.

So, it kind of controls the -- what kind

of procedures to we need? So, we have a list of commitments that Dominion has made. Staff reviewed that. I personally went through that list. It looks pretty good.

Well, what is our acceptance criteria? Well, it turns out that since it's been a few years since we've had an application for a new plant, we do not have distinct acceptance criteria.

So, that's why it's an open item. It looks good, but we the staffers are still formulating our acceptance criteria for what we've perfected in that area and so, it remains open.

CHAIRMAN CORRADINI: So, that, I guess -- I don't want to get ahead of where you're going to discuss this, but just if I might ask a follow-up question for that.

So, I'm looking through this now, actually. You have a list of -- I should say, Dominion's list of potential hazards and then, the next associated table that goes through management and administrative controls for those hazards.

So, as I understand what you just said is, looks good, but we have no specified benchmark or bar above which it's good enough and below which is not good enough.

MR. KEVERN: At the present time, that's correct. The staff is still developing its evaluation criteria in that area.

CHAIRMAN CORRADINI: So, let me pick one. Impact of over-pressure from use of explosives. Administrative controls to coordinate transport, store and use explosives or temporary measures to mitigate impacts.

So, that means you're going to have to look at essentially construction -- or I guess I don't know what that means exactly. So, you tell me, what is Dominion committing there, that you're going to review?

MR. KEVERN: We're looking -- that's part of the difficulty. So, we would not expect, they are not required to have those procedures in place or developed at the point in time the COL issued. It's just like some of the other detailed procedures. It does not -- they do not exist at the time the COL issued under Part 52.

CHAIRMAN CORRADINI: So, would those -- I'm sorry, I didn't mean to interrupt.

MR. KEVERN: So, we're looking at the comprehensiveness of the list, some level of detail. They don't just address and say, "Yes, explosives,

we'll take care of it. Not a problem." We're looking for more detail. Well, how much detail? That's the kind of question that the regulatory folks and the staff are looking at now, trying to decide what is the level we can expect by way of commitment, recognizing that we were not going to actually see these specific controls or procedures before the COL is issued.

CHAIRMAN CORRADINI: So, then -- so, to follow that up, I guess, is this going to be another thing that falls into, they'll be some general attributes of the controls, you'll feel -- you'll get a warm and fuzzy feeling from the attributes and then, it will appear as an ITAAC, where the inspector will come as construction is continuing and look at the controls as they are being essentially rolled out during the construction?

How did -- when does one go from warm and fuzzy to -- is an inspector in site during construction?

MR. KEVERN: Definitely, it will be part of our inspection, construction inspection program.

CHAIRMAN CORRADINI: Okay.

MR. KEVERN: And it's already included in -- under that division's area of responsibility. Now, whether the -- it evolves to the level of an ITAAC, I

don't know at the present time.

CHAIRMAN CORRADINI: Okay.

MR. KEVERN: I would know that.

CHAIRMAN CORRADINI: And only, just to pick it -- on this, so, I understand how it progresses, I think this where Graham is going. He's trying to -- he's looking for an example, so he feels good that you've thought it through, all the way to the -- so, let's say, what attribute would make it rise to the level of an ITAAC versus administrative controls, where you have some general guidance and attributes and that's where it stops?

MR. OESTERLE: Tom, let me jump in here. This is Eric Oesterle from the staff. Dr. Corradini, good morning.

CHAIRMAN CORRADINI: Hello.

MR. OESTERLE: The staff is -- Joe might take offense to that.

CHAIRMAN CORRADINI: I'm sorry.

MR. OESTERLE: The staff is currently working on developing some draft guidance for this area. Now, as Tom had mentioned, this was a requirement that got put into the regulations over 30 years ago and we haven't --

CHAIRMAN CORRADINI: That makes sense.

MR. OESTERLE: We haven't had to look at this for a long, long time, and so, as Tom mentioned, the guidance on an acceptance criteria for how we look at construction impacts is very thin.

So, we've having some discussions internally on how to review the information that is provided to us, and we're not yet at the point where we can determine whether something should be an ITAAC, because we're looking at things that may impact the operating units.

Now, there is an interplay here between the units that are being constructed and the units that are being operated and we all know that the operating units, they have sets of procedures that require them to do evaluations under 50.59 or as part of their maintenance rule risk assessments that would presumably look at those types of hazards to the operating unit, and any impacts on important safety structures, systems of components that are governed by tech specs.

So, we're trying to, through this guidance, identify and propose what the most reasonable balance would be between the applicant for his COL and the operating units.

Our plan is to provide, or draft then,

interim staff guidance document, which will get presented to the Subcommittee.

CHAIRMAN CORRADINI: Okay.

MR. OESTERLE: At a future time.

CHAIRMAN CORRADINI: Okay, fine.

CONSULTANT KRESS: Are there any presented impacts of construction on purchasing plans? I can presume to see trucks and cement mixers and --

MR. OESTERLE: Sure, I would say there could be some presumed impacts and that would be something that I think we would take a look at, when we develop this guidance.

Again, we're kind of delving into the area of that, that the operating units have procedural controls over administratively or managerially and there is a balance here between what the operating units are responsible to control, to ensure that there's adverse impact to the safety of the operating units, versus -- but the -- what they are allowing the constructors of the new units to actually perform.

So, there may be a give and take, in terms of review of what construction activities are going on and approval also by the operating units.

We're not saying that that's what the requirement is going to be, but that -- those are the

kind of discussions that are occurring right now.

CHAIRMAN CORRADINI: Okay. So, to kind of summarize, just because Graham -- I think I understood Graham's point, is he just wants to feel comfortable that when you're concerned about something or you're watching something, how you bring it to fruition, so the depth of which you think about it.

So, in this case, at least with the open item, the staff guidance is going -- is being developed in conversations with Dominion because this is a very specific site specific set of list of things that may impact the operating units.

MR. OESTERLE: The staff guidance is going to have to be generic and have to be -- it's going to have to cover all situations. Now, there may be --

CHAIRMAN CORRADINI: Is there a first of a kind and they get to enjoy the depth of this discussion more than others?

MR. OESTERLE: No.

CHAIRMAN CORRADINI: Okay.

MR. OESTERLE: I mean, with the information they and other COL's have provided, that gives us a starting point to see what kind of information --

CHAIRMAN CORRADINI: Okay.

MR. OESTERLE: -- they have provided and

gives us a starting point to see, what are we going to do with that information and is that information enough.

CHAIRMAN CORRADINI: That's fine. So, let me reverse the question and then I'll stop. So, this one would be a typical open item for all new plants on current sites, and you're engaging a community of COL folks, with staff, to get the proper balance of this.

MR. OESTERLE: That's correct, this would be a typical open item for COL's, until we issue the interim staff guidance final.

CHAIRMAN CORRADINI: Okay.

MR. OESTERLE: And as a part of the process, when we issue the proposed interim staff guidance, that goes out to the public for a comment and review, and we would certainly hope that the applicants would take a look at that and provide us input.

CHAIRMAN CORRADINI: Okay, thank you very much.

MEMBER ABDEL-KHALIK: The nature of this item, sort of suggests that it requires early resolution. So, what is the time line for the staff guidance?

MR. OESTERLE: We're looking -- we're still

developing it right now and I would hope that within several weeks or a month or two, we'd have something out.

MEMBER ABDEL-KHALIK: That the Committee would look at?

MR. OESTERLE: Yes.

MEMBER ABDEL-KHALIK: Thank you.

CONSULTANT KRESS: Would the FSAR accept -- sort of have the kind of details that Graham is looking for? Would that be the place to go?

MR. KEVERN: Yes, a combination of responding to that question, as well as Dr. Corradini's, what we -- the staff has several applications currently under review and what we've seen is that there is a minor variation, but in general, the scope and the type of information to address this issue is very similar across the different applications.

So, we've got kind of a spectrum of information and all very similar and that's the basis, part of the basis for our guidance, what do we expect and what has the effort already provided. So, it's a working effort that Eric mentioned.

Now, if we have -- establish criteria that is more robust, more detailed than what's currently in

the FSAR, sure, Dominion, as well as the other applicants will have to revise that.

CONSULTANT KRESS: Okay, thank you.

CONSULTANT WALLIS: Can I go back now? I understand why this is an open item. It clearly is site specific and the staff has not yet developed guidance. I understand that.

What I'd like to know is why all the other -- what the items will result, and I suspect that this is the answer, that the direct safety issues, Chernobyl issues and TMI items, items like that, are all resolved by referring to the DCD. Is that true?

So, it's really all that goes back to GEH's bailiwick. It's not a site specific thing and it doesn't really come up on the staff's radar screen, because it goes right back to the ESBWR generically, is that true?

MR. KEVERN: Actually, it's a combination of those.

CONSULTANT WALLIS: Is there anything site specific about Chernobyl issues?

MR. KEVERN: It would be not site specific, necessarily -- well, possibly, but there would be COL specific information, something that is --

CONSULTANT WALLIS: But it's not really

something North Anna has to worry about. They just refer to GEH.

CHAIRMAN CORRADINI: Well, there's -- the list is the next table up, list -- table 11.202 for TMI and table 11.201 for Chernobyl and a lot of them will be shift responsibility, shift managed.

There is things that I would assume that Dominion does as an operating unit, that they want to make specifically similar to what's happening at Surry, North Anna, blah, blah, blah, and that's probably, I assume, where that connection is. That was my guess, after -- because I found, when you told me to look there, I found these tables, but a lot of them are training, for example, for --

CONSULTANT WALLIS: That's right, but there's nothing -- there's no issue that comes up. I looked through this thing. I couldn't really see any issue which feel to North Anna to resolve. It all went back to GEH.

MR. KEVERN: That is correct. Although it's programmatic, it is for --

CONSULTANT WALLIS: That's right, which is why it's easy, really, to accept for something like -- the really site specific ones, like this one which is now open.

MR. KEVERN: Right.

CONSULTANT WALLIS: So, these get resolved because it's easy to just send it back to GEH, is that right?

MR. KEVERN: For simplicity, no. It's more complex than that, but as far as the other topics, we do have rather specific --

CONSULTANT WALLIS: For someone to --

MR. KEVERN: -- new guidance for the other topics.

CONSULTANT WALLIS: Yes, that's right.

MS. JESSIE: In addition to the items on the previous slide, we have other regulatory considerations that were reviewed and two here. There are two additional open items, one being the Nuclear Waste Policy Act, which the staff identified as open item 1-3 and the receipt, possession and use of SNM, which the staff identified as open item 1-4 and Gina already told you about those two.

CONSULTANT WALLIS: Does the last one include anything about nuclear waste or is that sort of left up in the air? They haven't planned to have on site storage and so on, but eventually --

MR. KEVERN: That item refers to the necessity to have your license, with respect to Part

30, 40 and 70 of the Commission's regulations for the receipt, possession and use of source, byproduct and the special nuclear material --

CONSULTANT WALLIS: You can use it, but what do you do when you've used it?

MR. KEVERN: That's not included in that specific --

CONSULTANT WALLIS: It's not included?

MR. KEVERN: No, it's not in the --

CONSULTANT WALLIS: It's in the --

MR. KEVERN: Actually, the waste issue was the second bullet. It's the in accordance with Nuclear Waste Policy Act of 1982, you had a situation that --

CONSULTANT WALLIS: Well, I think if the public has a concern about North Anna, one of them is bound to say, "What are they going to do with the waste," and presumably, aren't just going to -- we're going to store it on site until DOE figures out what to do with it. So, is that the answer?

CHAIRMAN CORRADINI: I think -- if I might, I think they tried to clarify. I think they just want a confirmation that the -- North Anna is collected into this site, or this unit is collected into the DOE contract, that eventually they will honor, and do

something with.

CONSULTANT WALLIS: But that seems to be the biggest umbrella and it's --

CHAIRMAN CORRADINI: Right, but I think this is addressed in the --

CONSULTANT WALLIS: But in reality, they're going to store it on site?

CHAIRMAN CORRADINI: That's not discussed here.

CONSULTANT WALLIS: Well, they've got to have plans --

don't they have to have plans for that? You don't require them to have plans?

CHAIRMAN CORRADINI: I think we can discuss this later. I don't think it's relevant to this discussion.

CONSULTANT WALLIS: It's not relevant?

CHAIRMAN CORRADINI: No, not directly, no, because what they've demonstrated --

CONSULTANT WALLIS: You have to have plans --

CHAIRMAN CORRADINI: -- that drycast storage that -- address storage, that they can meet their current situations. That's my -- I think what is happening.

CONSULTANT WALLIS: You want to pause it or you want to further --

CHAIRMAN CORRADINI: I think that --

MEMBER ARMIJO: Well, I have a question, back to the issue of the impact --

CONSULTANT WALLIS: That's a discussion for Congress, not for this group.

MEMBER ARMIJO: -- of the construction. Will security requirements for access to the construction site, for Unit 3, be handled by the same security organization for Units 1 and 2? Have the details of that been worked out?

MS. BORSH: Well, the security plan was submitted under a set -- as a separate part of the COLA and we'll be discussing -- will it be coming up in July?

MR. KEVERN: That's part of the question, is the -- it is part of the security plan and it's to review the safeguard information that the staff reviews and that's not a topic for ACRS's presentation.

CHAIRMAN CORRADINI: Currently?

MR. KEVERN: Currently, currently planned, not currently planned, but the answer to the question is yes, and that's -- we recently changed the

regulation pertaining to security programs, security plans and Dominion provided their updated security plan information in accordance with Part 8, right?

MS. BORSH: Yes.

MR. KEVERN: Part 8 of their application, approximately a month or month and a half ago and the staff is currently reviewing that part.

So, that will be -- and to go back to the slide that Janelle had earlier, as far as the crosswalk there, we documented our evaluation in the Section 13.6, in Chapter 13 of the SER.

But at least part, if not the majority of that information is with safeguards and will have a very cursory version of the summary, if you will, of the evaluation that is coming from that.

MEMBER ARMIJO: Okay, thank you.

MS. JESSIE: All right, the last slide, we have a post-CL activity, STD-COL item 1.7-1-H and this item, this speaks to the need for the piping and instrumentation diagrams upon completion of the final design.

The staff does not need it at this time, to do their reasonable assurance finding, but upon completion of the final design, those documents will be provided to the NRC and the other bullet is simply

recapping the four open items that were discussed between Gina's presentation and the discussion that you heard this morning. Questions?

MEMBER BLEY: Just one, that discussion about the security, made me put back to Gina's slide three, which laid out the COLA structure, and out of those 10 parts, one of them you don't really -- the security plan is not slated to come here.

But it looks like the rest, except for maybe environmental report will come before the ACRS, is that right?

MS. BORSH: Yes, that's right, as Tom has explained -- do you want to? As Tom was explaining earlier, for example, the tech specs are really part of Chapter 16.

MEMBER BLEY: Right.

MS. BORSH: So, you'll see that when we talk about Chapter 16, emergency plan is part of Chapter 13, the Departures Report is throughout and we'll talk about the --

MEMBER BLEY: All of these are embedded in the FSAR?

CHAIRMAN CORRADINI: Yes.

MEMBER BLEY: Okay.

CHAIRMAN CORRADINI: As I understand it,

they're just called out because they have extensive additional information, such as the plan.

MEMBER BLEY: Yes, okay, thank you.

MR. KEVERN: But to clarify that, they are not all embedded in the FSAR. They are all their own individual parts, some of which are addressed to one extent or another in the FSAR.

So, an example, in Chapter 14, in Section 14.3, you'll see the FSAR, you'll see ITAAC being addressed, but very cursory description. If you want all of the details of the ITAAC, you go to Part 10.

Now, for -- and that's why we put this crosswalk out. So, but as far as the staff's evaluation, we do not do a 10 part evaluation. We were doing something similar to what we've done for the last couple of decades. We do one safety evaluation report, break it up into 19 different chapters and that's where we cover it, but we do cover the entire application.

MEMBER BLEY: Okay.

MR. KEVERN: And that was the point of the slides, to help folks understand how we're doing business.

MEMBER BLEY: Thank you.

CHAIRMAN CORRADINI: Other questions? I

know you have a lot in Chapter 7, so go ahead and move on.

MR. KEVERN: All right, thank you, Janelle.

MEMBER BLEY: While you're setting up, I have a question that runs throughout everything, and I've just got an example of it in one chapter, but in the incorporate by reference, the DCD, but then you make some changes, but some of those, you refer to a section in the DCD, bullet number three.

But when I look at the DCD, it's bullet number four and they don't have numbers on them and they're just bullets. It seems the cross-referencing may have a -- leave at little bit to be desired.

MR. HICKS: Are you looking at Rev 5 of the DCD or Rev --

MEMBER BLEY: I'm looking at Rev 5, so, you've referenced four?

MR. HICKS: No, it's Rev 5.

MEMBER BLEY: So, they should all be right?

MS. BORSH: They should.

CHAIRMAN CORRADINI: In our CD that we got from them with all the parts, the Rev 5 DCD is actually incorporated as part of it. So, it makes it easier to flip back between -- okay.

MS. BORSH: You're pointing out some --

MEMBER BLEY: And bullet five isn't the one to refer to?

CHAIRMAN CORRADINI: We'll have to look at that.

MEMBER BLEY: Okay, so, it just seemed that referencing that way doesn't seem completely clean. There are some parts where it's very messy and in the fourth paragraph and the third bullet, it can get messy, but if we missed something along -- incorrectly, we'd like to fix that.

MR. KEVERN: From the staff's perspective, that was a challenge. It took us while, much longer than we thought, to get started in trying to explain to all the reviewers, how the process works and how you go back and forth and whatever, it's -- so, it's not --

MEMBER BLEY: Without having numbered lines or something like that, this is --

MR. KEVERN: Well, this is atypical to see that. Typically, when we went through and were doing evaluation, we did not find that problem. So, I would be curious to see which example you got also.

MS. BORSH: Chapter 7, instrumentation and control systems. We incorporated the entire Chapter 7 of the DCD. We have no departures, no exemptions, no

additional information and they're in the SER with open items. There are no open items or confirmatory items. That's all.

CONSULTANT KRESS: The DCD, who is the IBR? It doesn't say much in the instrumentation. It just says we'll worry about that later at the COL stage.

MS. BORSH: Not at the COL stage. It's more -- there is -- yes, there is --

MEMBER BLEY: Of the INC at ITAAC?

MR. WACHOWIAK: In the DAC, is not acceptance criteria. But there's one step before the ITAAC, but it's passed COL.

MEMBER BLEY: But it's not here.

MS. BORSH: Yes, it is not here. It will not be here when we receive our license.

CHAIRMAN CORRADINI: Everybody around the table is very satisfied with that answer.

MS. BORSH: I saw that.

MR. WACHOWIAK: I think everyone around the table understands that.

MEMBER BLEY: That's a good way to phrase it.

CHAIRMAN CORRADINI: I was being proactive.

MS. BORSH: Thank you, Dr. Corradini.

CONSULTANT WALLIS: Well, as a customer of

GEH, you simply buy what they provide?

MS. BORSH: No, there's --

CONSULTANT WALLIS: You just trust them to provide the instrumentation that your operators will be happy with or do you look at it and say, "We want to change it?"

MS. BORSH: I have to say that for North Anna and Dominion, we have been very fortunate in the timing of our agreement with GEH and we've been able to work together with GEH, to develop what we think is an acceptable design, acceptable platforms, and GEH has been willing to work with us on that. So, we are at an advantage.

CONSULTANT WALLIS: Well, although you were incorporating by reference, their stuff, you actually have an influence on that.

MS. BORSH: Yes.

CONSULTANT WALLIS: I wasn't aware of that.

MS. BORSH: Yes, and actually, that's true throughout the DCD too.

CONSULTANT WALLIS: Then when GEH sells this ESBWR to some other plant, they will have a similar influence, which will be changing the instrumentation in some way? It's a generic instrumentation or is it going to be site specific?

MEMBER ARMIJO: That's the idea of the DCD.

MR. WACHOWIAK: The expectation is that we would solve the instrumentation design acceptance criteria one time for a block of plants, such that if the INC system becomes obsolete, that's when we would change it for a different set of plans.

But it's expected that all near term ESBWR's will use exactly the same INC.

CONSULTANT WALLIS: Well, this is a little bit different from historically.

MR. WACHOWIAK: Yes.

CONSULTANT WALLIS: Yes.

MR. WACHOWIAK: One issue, one review, one plan.

MEMBER BLEY: One question on this. Is your intent, when that comes -- I know on the EPRI document on ITAAC, they offer three ways to approach that. Which of those three were you folks willing to take? Do you remember those? You have to look them up.

One is by a change to the design, essentially, an amendment to the design. Is that the approach that we need to take?

MR. WACHOWIAK: WE have, in Section 14.3, Appendix A, in our DCD, a description of how we intend

to close the design acceptance criteria and it's through a use of reports. I've been cautioned to not specifically say exactly what kind of report, because that's still under consideration.

But through a series of reports, where we would finish the design, we would write it up in a generic report and then, the -- all of the applicants would then reference that specific report and the acceptance by the NRC of that report, to implement the INC system or the specific DAC that we're talking about.

So, that's the methodology that we're going to do.

CONSULTANT WALLIS: Okay, thank you.

MR. WACHOWIAK: And that's written in the DCD.

MS. BORSH: Tom has just asked, you know, if I could give you all an example of GE working with Dominion and the other applicants.

In Chapter 18, I think, HFE is a very good example where human factors engineering, GEH was in the very early stages of beginning the work on that when we started working with GEH and we actually have two Dominion people located down in Wilmington, working on a daily basis with GEH, to come up with a

program that is going to be acceptable to us and meets their needs also, and their other vendors -- I mean, I'm sorry, other utilities that have representatives down there also.

MR. JUNG: This is Ian Jung with the NRC. I think as to the question related to the options for closing that -- there are three -- there are three items. One is amendment to the design certification. Second one is, as part of the COLA coming in, they can propose that information, the design acceptance criteria and information and staff can review and approve it.

Third option is, post the COL, the North Anna, for example, they can come in with information, with the support from GEH and they can close that as part of the post-COL activities.

MEMBER BLEY: And that's the option --

MR. JUNG: Those are options. I think the third option is going to be what's going to be taking place.

MEMBER BLEY: That's what it sounds like.

MS. BORSH: That's all I have for Chapter 7, Tom.

CHAIRMAN CORRADINI: More time for Tom. If you have a lot, I mean, you can just wing it and not

show the slides.

MR. KEVERN: I've got many pages of presentation here.

CHAIRMAN CORRADINI: Sorry, that wasn't called for, I apologize.

MR. KEVERN: I didn't know that was allowed in these meetings. I'll have to work on that. All right, I've got one slide, but I've got a prepared statement I have to read, so, I get the right words.

All right, the staff has reviewed Chapter 7 of the FSAR and has identified -- and we identified, as Dominion stated, that it incorporates by reference, Revision 5 of the DCD, no supplemental information and we find this acceptable.

Now, for the caveat, as with all FSAR information that incorporates by reference, the DCD, the staff's evaluation of Chapter 7 will be updated, as appropriate, at a future date, to reflect the final deposition of the design certification application.

What that means in more lay terminology is that yes, the review is ongoing. We recognize that, like we've said throughout Chapter 1. At the present time, it is all IBR. We expect it to stay that way, based on what the design certification applicant has told us, as well as what the COL applicant has told

us.

We remain flexible and if it changes, it changes. But as of this point in time, why, that seems to be a reasonable approach that the staff finds acceptable.

CONSULTANT WALLIS: Can I ask you a question now? I mean, there are ongoing technical issues with the ESBWR.

MR. KEVERN: Yes, sir.

CONSULTANT WALLIS: Which is being handled by a different division. Do you folks ever go back to them and say, "We have a thought about these technical issues, that you maybe not have had." Do you have interaction with them, or do you just check that everything is referred to by reference, or do you actually look into any of the technical issues at all?

MR. KEVERN: We'd like to let the technical staff address that issue.

MR. JUNG: Yes, I think the way I understand your question is, given North Anna application, there are other design, other chapters, for example, are we looking at, and yes, we -- has the lead for a Chapter 7 person, but we are involved in Chapter 3 issue, Chapter 9, Chapter 11, yet answers, as we actually provide some inputs to those chapters

as well.

So, our role is actually, the INC system being involved in many of the systems, we tend to read the Chapter 15, Chapter 6 and other chapters, to ensure there's a consistency of the information, that the way we understand is, you know, represented.

CONSULTANT WALLIS: Maybe, I don't know if this is a right question, but are there examples where you have actually enlightened the reviewers of the ESBWR about some issue, which they were not paying much attention to or something, or you've actually helped them with some issue, or it's not your role presumably?

I don't see how you could avoid doing it. If you look at the DCD, you must have thoughts and presumably, they might be referred to the people who are reviewing it, and I'm just trying to see how you interact with those folks.

MR. JUNG: Even now, for the design certification, the ESBWR, there is continuous dialogue going on with certain changes still being made the impacts the reactor systems and INC area.

There are certain items in place, but it -- for the INC system in the ESBWR, we look at all of those, both safety and non-safety systems. So, even

now, I think, we are continuously looking at it and we are getting to the resolution of most of the issues.

CONSULTANT KRESS: Your question is more general than just -

CONSULTANT WALLIS: I think you're the INC people, aren't you? So, maybe I -- you know, you're the other -- maybe the other guy, probably, who should answer that question.

MR. KEVERN: Well, I'm not sure this is a direct answer to the question but the way the staff is organized, similar to what Gina was describing for the designs and the way the staff is organized, we're are primarily organized by technology.

So, we have an ESBWR organization. We've got an ESBWR specific project manager branch that coordinates and in approximately half the technical staff are organized by technologies also.

So, Ian, for example, is reviewing the ESBWR there at DCD. He is also reviewing all of the ESBWR COL applications. So, that way, we've got cross-pollination crosswalk, if you will, between the design cert and all of the COLA's.

Now, the further question about crossing technologies, they have -- it is incumbent upon, on Ian, for example, to talk with his counterparts, other

branches that are reviewing the other technologies, and so --

CONSULTANT WALLIS: But that does happen, and it's useful?

MR. KEVERN: Yes, well, in my opinion, it does. I can let Ian speak for himself on that.

MR. JUNG: I'm hoping to see e-mails from other branches.

MR. KEVERN: But we do do a -- I say, there are a number of situations where we're doing this as a collaborative effort. North Anna is the first -- and you look in the audience, both from industry, as well as the staff, and you'll see folks from all the other technologies.

I'd like to see -- if they're happy, they're not here, probably, but the -- it's -- we're trying to do standardization as much as we can --

CONSULTANT WALLIS: That's what I was asking.

MR. KEVERN: -- during the process or as technical issues.

CONSULTANT WALLIS: I'm asking because, you know, I don't spend much time on any of this, but when I look at say, DCD for one day, I have some thoughts about it and I have questions about how does this work

and so on and so on, and you guys must have the same -- can resist having some thoughts about it, but gets transferred to the people whose job is really to review the ESBWR itself. That's all I'm trying to say, and I hope it happens.

MR. KEVERN: Sure.

MEMBER BLEY: One last question or statement, just to make sure I understand how this is -- this is suppose to work.

As I understand it now, this -- they'll get that closure for the three applicants after GE submits their report, the applicants will submit it to NRC, to get approval, that they've met the DAC criteria, but as I understand it, if you do that post-COL, nobody else can come in and adopt that by reference. It would have to be submitted again, subject to new review, is that correct?

MR. JUNG: The submittal has to be -- each COL holders would -- or applicants, would come in with the closure letter or some form of documentation, they've done it, if they're adopting the same information that North Anna did it, staff will not, perhaps, review the same information again, if that -- the closure, for example, on software requirements documents, if -- we expect it to be identical,

throughout the ESBWR designs.

So, in that case, we are -- I don't think we need to look at them, but downstream installation and task team for at the particular site area, probably will need to focus more on actually implementation at the site.

But more so, of the life cycle activities of the design stage, there was -- information is going to -- we expect it to be very much identical, then probably, we don't need to re-look at it in detail.

MEMBER BLEY: Okay, but it will have to be submitted to you, and you could, if you so chose.

MR. JUNG: Yes, we clearly have an option of --

MEMBER BLEY: Not the same obligation that you have when you can cite a previous COL or the DCD. It's already been through it.

MR. JUNG: That's correct.

MEMBER BLEY: Okay, thank you.

CHAIRMAN CORRADINI: Other questions? Should we move onto Chapter 4?

MR. KEVERN: Amazingly, we are approximately on schedule. Would you like us to proceed on with Chapter 4? So, next we'll have Chapter 4 and we'll start, as usual, with Dominion's

presentation.

MS. BORSH: Chapter 4 is reactor. This slide lists most of the topics that are covered in Chapter 4 and as you all probably know, most of this information is found in the DCD, which we incorporate by reference.

We added however, information to the nuclear design section, which is the second bullet that is highlighted in blue, and to the section -- the other section that's highlighted in blue, typical control rod patterns and associate power distribution for the ESBWR.

In Section 4.3, nuclear design, there is a COL item in the DCD that asks us to address any changes that we've made to the fuel control rod or core design from that described in the reference certified design and that North Anna, for North Anna, we have made no changes and we've just confirmed in section -- with a statement in Section 4.3.

Then, in appendix 4A of the DCD, there's a very similar, almost identical COL item that asks for the same thing, to confirm that no changes to the fuel control rod or core design from that described in the certified design, and we make that confirmation again in 4A.

CONSULTANT WALLIS: What did you do about stability evaluation?

MS. BORSH: We accepted what's in the --

CONSULTANT WALLIS: You accepted whatever GEH told you?

MS. BORSH: Yes. We recognize that the DCD is under review, that there are questions that are ongoing and we're keeping up with that, in discussions, as you asked earlier.

CONSULTANT WALLIS: What are your other reactors on site? What kind are they?

MS. BORSH: Westinghouse BWR.

CONSULTANT WALLIS: You don't have experience with BWR's and -- you have BWR experience?

MS. BORSH: At Millstone, we have a BWR.

CONSULTANT WALLIS: You have experience with excursions and stabilities?

MS. BORSH: At North Anna?

CONSULTANT WALLIS: No, but you've got a different type of reactor.

MS. BORSH: Well, we have people -- employees from Millstone and people that we've hired that have BWR background. So, it's not just the people that have been operating BWR's all this time.

CONSULTANT WALLIS: But essentially, you

accept whatever GEH says about stability.

MEMBER ARMIJO: The incorporate by reference, the DCD --

CONSULTANT WALLIS: That's right.

MS. BORSH: We'll incorporate by reference, the DCD, that's correct. Yes, and we --

CONSULTANT WALLIS: Maybe there's something behind the scenes you do that --

MS. WHITE: We actually have had a SOR --

CHAIRMAN CORRADINI: You've got to identify yourself first.

MS. WHITE: I'm sorry, Frostie White, GEH. We actually have had a SRO from Millstone one, that has been with us at GEH during the entire DCD. So, they have had considerable input and understand the BWR excursion stability issues. So, that has been an input to us.

CONSULTANT WALLIS: Thank you.

MS. BORSH: In the SER with open items that Tom sent us, there are no open items and no confirmatory items for Chapter 4.

MEMBER ARMIJO: I guess I really understand what you did with this chapter. It seems like you accept everything that's in the DCD, but you point out, there's two differences --

CHAIRMAN CORRADINI: I think it was required to confirm, rather than --

MEMBER ARMIJO: So, it's a confirmation statement on these two areas, that's it?

MS. BORSH: Right, we're just confirming that there are no differences.

MR. HICKS: Those are COL items that we have to address.

MEMBER ARMIJO: Okay, I got it.

CHAIRMAN CORRADINI: If you remember, just for Sam, if you remember, there are both open items and open COL items and that's what they were -- those are referenced, the open COL items.

MEMBER ARMIJO: Oh, that they must address in the COL and it's just a statement that's sufficient.

MR. HICKS: So, an issue that --

CHAIRMAN CORRADINI: Before making any changes, right.

MEMBER ABDEL-KHALIK: So, first core design will be the same for all plants, based on this?

MR. HICKS: At least this one, this one.

MEMBER ABDEL-KHALIK: Yes, and that will be incorporated in the DCD, the details of the core design?

MR. WACHOWIAK: It's in a license and topical report that has been submitted to the staff and is under review right now, the initial core analysis.

CHAIRMAN CORRADINI: Other questions for Gina?

MS. BORSH: Thank you.

CHAIRMAN CORRADINI: Tom?

MR. KEVERN: Bear with me, I need to load the status presentation on here.

CONSULTANT WALLIS: I'm just wondering how much work there is. I mean, if everything is incorporated by reference, all you need to do is check one sentence and move on. What do you have to do?

MR. KEVERN: For Chapter 4.

MS. BORSH: Are you asking generally?

CONSULTANT WALLIS: I'm asking the staff, what do you have to do? I mean, you just look there and say, "They refer to the DCD, therefore, it's okay," check it off and move onto something else. Can you tell me what else you do? I'm not trying to be critical, I'm just curious.

MR. KEVERN: I'd like to start out by responding to the question. Back Chapter 1, Gina made a -- I'm sorry, Janelle made a point of the template

language that we just identified and you've seen that in each of the nine chapters you've looked at so far and part of the template language is to ensure that we're consistent across technologies, as well as across chapters, and one of the points -- on of many points we address in -- or hopefully, we've adequately addressed in that template language is the question on the table now and it's what do we do?

Well, the staff reviewed -- is reviewing, did review and is continuing to review the design control document as part of the application review.

Now, when the COL application comes in North Anna, like in Chapter 4, we know that there are two items that identify the DCD, that specifically require some action on the part of the applicant. That's kind of a no-brainer.

But now the rest of it, when we look at the North Anna application that says everything is IBR, the effort on the status part is to confirm that that's appropriate. So, it's going back and looking at the DCD, and that's one of the reasons we're organized by technology.

So, I'll use the example of beginning in Chapter 7, that those folks are the subject matter experts for the DCD for Chapter 7. So, the --

CONSULTANT WALLIS: But they never comment on the DCD. They just incorporate it by reference. So --

MR. KEVERN: But you need to determine that there is no necessary action or information that the COL applicant needs to have. In Chapter 7, there's the example, and now, in Chapter 4, with those two exceptions, we -- the staff reviews it and says, "No, there is nothing else needed to be done." The DCD encompasses the entire scope of information that is necessary in that area.

Now, in Chapter 4, we've got those two items --

CONSULTANT WALLIS: You never find any gaps in the DCD?

MR. KEVERN: We have questions. I wouldn't call them gaps. We have -- we've identified a number of questions and those often, is a substance of a RAI. It's, well, you've incorporated this by reference, but it appears this ought to be site specific or COLA information.

Well, in some cases, that goes back to it and it's almost a circular process and it's where we've -- the staff has identified some of the RAI's because the review of the DCD is ongoing along with

the COLA, we end up making changes that we don't -- the GEH has actually made changes in the certified design, either to plug what we've -- the staff thought wasn't whole or wasn't clear, or to identifying an additional COL item that had to be addressed in the COL application.

It's been an ongoing process and it's -- that's one of the advantages of doing this review. There are a lot of disadvantages in doing review, primarily the complexity and the potential confusion. But one of the advantages is that we have this flexibility. Staff finds and RAI and we're used to an RAI against North Anna.

North Anna says, no, that's not ours. That belongs in the DCD. So, staff patiently waits until the DC applicant and the COL applicant decide where it's going to go, what the information is. As long as the answer comes back that's acceptable to staff, we really don't care whether it's in -- incorporated in the design certification or whether it's part of the COL activity, as long as our question is resolved satisfactorily.

CHAIRMAN CORRADINI: I think where Graham is coming from, which is a continuing thing, he just wants to feel assured that however you intermingle the

COL review staff and the DC design certification staff, there is continual talking, so that everybody feels -- everybody is communicating with everybody on the staff side.

If something pops up, it's communicated. It isn't just left for somebody else. That's what I think my sense is part of it. So, they -- am I --

CONSULTANT WALLIS: I'm trying to think. Well, my question was, what do you do? I'm trying to envision what it is you've been doing and all I have to go on is your output that you're presenting here, which doesn't really tell me what you did.

CHAIRMAN CORRADINI: They're very disciplined. A lot of what they do is working with the design certification group. That's what I hear them saying back to you.

MR. KEVERN: Well, and I'd like to submit that the several thousand RAI's that we issued against the design certification and the 300 to 400 that we issued against North Anna, reflect some of the --

CONSULTANT WALLIS: So, that also reflects what you've been doing.

MR. KEVERN: Yes.

CONSULTANT WALLIS: Yes.

CHAIRMAN CORRADINI: But they're not like

traffic cops, that the more tickets they write --

MR. KEVERN: No.

CHAIRMAN CORRADINI: -- that implies they're doing a better job either, just so we're clear.

MR. KEVERN: In some cases, the staff, especially as we're getting started with the North Anna review, it was a learning curve for the staff, how can this be, just like some of your questions now.

Well, it says IBR, and there's nothing there. Well, how is that possible, and so, we have public meetings. We have a number of teleconferences with Dominion and with GEH on the phone and in some -- 'x' percent of the time, why, the staff was, oh, okay, I got it, it makes sense now. We didn't understand it. How about re-writing these sections of the FSAR, the DCD, to help clarify that for future folks, so, we don't have to go through this again.

In other cases, the explanation was not adequate and an RAI results.

CONSULTANT WALLIS: So, I guess that, you know, the question I'm sort of looking at too, is well, is this whole COL exercise a useful one? Does it really add anything to this, or is it just sort of a formality?

MR. KEVERN: No, it's not a formality. Well, it is a formality, but it's also, there's a lot of meat to the review, and that is mostly true in the site specific areas.

We're focusing now -- we intentionally started out with the areas that were going to be confusing from a process perspective, because most of the information is IBR in these early chapters.

This afternoon when we get to Chapter 8, you'll see that better than 50 percent of Chapter 8 is site specific information.

CONSULTANT WALLIS: But like the thing which -- I don't know how long I can keep talking here, but --

CHAIRMAN CORRADINI: Not long.

CONSULTANT WALLIS: Yesterday, we had a very useful technical discussion with GEH, right, and all kinds of issues came up and there's all kinds of give and take now, and today, it seems to be just routine.

I mean, you sort of say they've checked everything and everything is okay. So, I said, okay, well, they're in -- you know, well, what's the output that's useful about this, except just checking that everything is okay, except for a couple of things.

And so, I figured, well, you know, there's a difference in productivity or something, about the two activities, and I'm wondering if that's true or just my false impression.

MR. KEVERN: I think it's a combination of the two. My personal opinion, that it's the -- it is correct for these first chapters we're going through, because the majority of the information is IBR. We get into, but it's not true, we get into later chapters, which is one of the reasons we're not going to give you these other chapters until --

CONSULTANT WALLIS: Okay, but the other ones are going to be --

MR. KEVERN: -- because that's where there's a lot of site specific information. Chapter 2, for example, is just the opposite. It's, what, 95 percent or so that's all --

CONSULTANT WALLIS: So, should look forward to that one, right?

CHAIRMAN CORRADINI: We have four wonderful days, Graham.

MEMBER BLEY: But one is this afternoon, both of them.

MR. KEVERN: Chapter 8 this afternoon and --

MEMBER ABDEL-KHALIK: Has there been any example where the site specific material was found to be in conflict with material incorporated by reference?

MR. KEVERN: In my perfect recall, but I say there have been examples where it's confusing, but not contradictory. So, there was -- when the staff would read the DCD, would read the FSAR, whether it was the fill in the blank for a COL item or it was supplemental information, the staff was confused.

I can think of one -- well, I will give you one example. It was -- it's conceptual design information for system X. I'd rather not identify the system, but the -- it was conceptual design information for a support system and Dominion provides that -- fills in the blank that for that conceptual design information for that system and the way they did it, it appeared to the staff that it was redundant with and in some cases, contradictory to the detail that was in -- the limited detail that was in the DCD.

So, staff was confused. We decided we couldn't quite figure this out. We wrote an RAI. We had teleconferences with Dominion and bottom line was they agreed to re-write that entire section, so -- and making it very clear, what part was incorporating by

reference from the DCD and where they were going off and doing their own site specific design in that system.

MEMBER ABDEL-KHALIK: And you were able to capture that because the same people were involved in reviewing the North Anna specific material, were also involved in reviewing the DCD material?

MR. KEVERN: That's correct.

MEMBER ABDEL-KHALIK: Now, what if that was not the case? How would you capture that?

MR. KEVERN: Well, we've got two options. One would be that the individuals reviewing the COL application have to go back and re-read what was in the DCD because they were not the initial reviewer of the DCD or they can coordinate, communicate with the staff that did do the -- the technical staff that did do that review and see if there is an issue.

We have the luxury right now of having -- the way we organize it, by having the same reviewers for both the -- in most cases, we are having the changes in staff, people get promoted, leave, retire, whatever, but in most cases, where we have the same technical subject matter experts reviewing the design certification application as the North Anna application.

We will not have that luxury forever. That's one of the concerns of the -- of capturing the corporate knowledge.

MEMBER ABDEL-KHALIK: But I'm concerned about process and things that may just fall through the cracks. If someone is reviewing sort of a North Anna specific item in a silo, they may not capture the implication of that specificity on other items that may have been incorporated by reference, not necessarily in that particular area, but in other areas.

MR. KEVERN: I can't say it's impossible. I say it's not likely. One of the advantages, you know, our designs and review approach, is that we, presuming at some point in time in the future, we'd certify the ESBWR design. We'd issue a COL to North Anna, although the rest of the subsequent COL's are just following along in sequence, and so, that type of decision, what is or is not within the -- related to the DCD versus the COL, that's already -- in most cases, already been addressed for the referenced COL.

Now, if site specific information comes up with some of the -- one of the subsequent COL's, yes, there is the -- the challenge for the staff, to make a determination whether this is similar to, different

from, contradicts what's in the DCD, really is site specific information and how that should be evaluated.

It's a challenge. I don't know what else I could say on that.

CHAIRMAN CORRADINI: Other questions?

MR. KEVERN: Some of my peers or superiors like to make a comment on that process?

CHAIRMAN CORRADINI: I think we're fine. Let's move on to the -- all right.

MR. KEVERN: All right, next we'll have the staff's presentation on Chapter 4. We have Jim Gilmer who is a subject matter expert doing the staff's presentation on Chapter 4.

MR. GILMER: Okay, Dominion has already said, all of Chapter 4 is incorporated by reference. So, the mechanical, nuclear and thermo-hydraulic design is identical to the DCD, where it applies to the document.

The two COL information items, Dominion has stated that there are no changes to the fuel control rods or core design and the staff agrees with that. There are no site specific items that need to be addressed at this time.

All of the regulatory guidance that the staff used to evaluate the COL application is

identical to the -- to what was used for the design certification review and in the case of reactor systems, we did have the same reviewers involved in the design cert and still are, with the open issues.

We had no RAI's associated with the COL, since everything was incorporated by reference and right now, there are no post-COL activities that were identified.

We will have some initial testing reviews when the time comes, but that won't be part of the COL approval.

That's basically all I have. Open to questions.

CHAIRMAN CORRADINI: Questions? Okay.

MR. GILMER: I can make an attempt to address Dr. Wallis' earlier question. I think --

CHAIRMAN CORRADINI: You are a brave man.

MR. GILMER: And this is my own opinion, but think the whole idea of the Part 52 is that staff would have basically, a check off when the COL comes in, to streamline the process. So, that's our view of it.

CONSULTANT WALLIS: I'm just wondering what value is added by doing that. Well, you simply say, "We're buying the reactor as designed," and that seems

to be what's happened.

MR. GILMER: Right off the shelf.

CONSULTANT WALLIS: Buying the car with the warranty and that's it, or whatever.

MR. GILMER: Exactly.

CONSULTANT WALLIS: You don't go under the hood.

MR. RAY: This is Neil Ray. I'm trying to address your question and concern. I think that it might be very clear to all of the folks here, including myself, that when it says IBR, we just don't sign it off. It doesn't work that way. It may sound that way, but it doesn't.

The reason it is not, we work in the component branch, which at present, I can talk to you. We work in a very neat group. We talk to each other. We know the problems. We look at other design centers, what are the issues? How did they resolve it? What are the current operating reactor experience?

We put together all in place and then when we sign it off as IBR, not as it says IBR and we said, we are happy, sign it off. No, it doesn't work that way. I think I want to make it very clear to all of you folks.

CHAIRMAN CORRADINI: Thank you. We're at a break point. Why don't we take a break until 10:30 a.m. and we'll pick up with Chapter 18.

(Whereupon, the above-entitled matter went off the record at 10:16 a.m. and resumed at 10:31 a.m.)

CHAIRMAN CORRADINI: Okay, we're back in session. We're going to start with Chapter 8 and the --

MS. BORSH: Eighteen.

CHAIRMAN CORRADINI: Eighteen, sorry, 18, and North Anna -- or Dominion presentation.

MS. BORSH: All right, welcome back. Chapter 18 is human factors engineering. There is a lot of information in DCD Chapter 18 on this -- on the subject. These first six bullets are all discussed in the DCD. We did not add any information to these sections of the DCD.

This next slide contains the remaining topics that are covered in the DCD and we added some supplemental information to that last bullet, human performance monitoring section. All the other stayed the same. We just incorporated them by reference.

In Section 18.13, human performance monitoring, there is a DCD COL item that we addressed

and to address it, we provided the milestone as to when we will be implementing the human performance monitoring program and we committed to implement it prior to beginning the first licensed operator training class.

In the SER with open items, there are no open items and no confirmatory items for Chapter 18, for the North Anna COLA.

CONSULTANT WALLIS: The human performance monitoring means what?

MS. BORSH: The description of the program.

CONSULTANT WALLIS: What does it mean? Does it mean giving examinations or tests or -- I don't understand what human performance monitoring is.

MS. BORSH: Well, can I call a friend? Dan, me call for --

CONSULTANT WALLIS: Just quickly, in a couple of sentences, what happens?

CHAIRMAN CORRADINI: She's going to still call a friend.

MR. MEEKOFF: Hey Gina.

MS. BORSH: Yes, Dan, would you mind answering Mr. Graham's -- I mean, Mr. Wallis' question.

MR. MEEKOFF: Yes, I think I can take a

crack at that.

MS. BORSH: Thank you.

MR. MEEKOFF: The human performance monitoring program is really the last step in the process, described in NUREG 0711, Rev 2. The human performance monitoring program intends to ensure that the design that was verified in design implementation is preserved through the operating life of the unit.

So, the program, for example, collection processes information on operator, operator training and equipment data. It identifies trends. It looks at issues. It identifies deviations in training, evaluation results. It looks for latent errors in the application of the standard design. It assess the impact of issues on the standard design.

So, basically, it intends to ensure that the margins that are present in the existing design are preserved through the operating life of the unit.

CONSULTANT WALLIS: Okay, so, it incorporates a lot of other things.

MR. MEEKOFF: Absolutely.

CONSULTANT WALLIS: Thank you.

MS. BORSH: And just to let you know, Dan Meekoff is one of the three people, Dominion employees, BWR licensed operator that is at GE

Wilmington and works day to day with those guys on the program.

Thanks, Dan. NRC is going to present now.

CHAIRMAN CORRADINI: Thank you.

MR. KEVERN: Thank you, Gina. Staff's presentation for Chapter 18. We have Paul Pieringer, who is the lead subject matter expert for review on the topics for Chapter 18, Paul.

MR. PIERINGER: Good morning. I am the lead reviewer for the ESBWR design, which includes all of the ARCO and subsequent COLA submittal's that would come from that.

We have reviewed FSAR Chapter 18. It incorporates by reference, the ESBWR DCD Chapter 18 with no open items, no confirmatory items, no departures.

They did provide one little piece of information for me to review. That was under this supplemental information that's been described, which addresses a DCD standard COL information item, dealing with the milestone and they told me that the milestone was going to be prior to the first licensed training program.

My assessment is that that's an excellent place to begin your program because it's the first

opportunity you have to observe operators, using real procedures on a full scope simulator and that's the best opportunity we have to verify that the HFE design, as it was proven during the verification and validation effort, is in fact, carried through into the operating plant activities.

CONSULTANT WALLIS: So, the word milestone now refers to the fourth dimension? It's been totally incorporated into a new jargon that -- milestone refers to time, not space.

MR. PIERINGER: It refers to time, yes, sir.

CONSULTANT WALLIS: Okay. So, just when they -- when are they going to do it, is the only question.

MR. PIERRINGER: Yes, sir, that's it. How they're going to do it is all described in the DCD.

CONSULTANT WALLIS: That's right. So, when is the only question.

MR. PIERINGER: Yes, sir.

CONSULTANT WALLIS: And how they're going to do it is acceptable? Well, maybe I shouldn't ask that question.

MR. PIERINGER: We're still reviewing the --

CONSULTANT WALLIS: You're still reviewing that?

MR. PIERINGER: We're still reviewing the DCD.

CONSULTANT WALLIS: Yes, thank you.

MEMBER ABDEL-KHALIK: So, what kind of information would you expect them to collect prior to the beginning of first licensed operating -- operator training plant?

MR. PIERINGER: Well, I wouldn't -- in terms of collecting information from real operating performance, what they would be collecting is via the verification and validation efforts, which is a full scope simulator, trained operators, using approved procedures and we integrate all those together and we make sure that the HFE design is functional.

MEMBER ABDEL-KHALIK: But presumably, this says prior to beginning of first licensed operator training plant.

MR. PIERINGER: Right, so, the way I understand this is, the program gets implemented. That means that all their procedures on how they're going to observe and how they're going to document the observations that they make during that first training activity, those are all ready to use and when they

actually perform that first activity on the simulator, then they'll be ready to make those observations and typically, translate those, whatever they find will be translated into the corrective action process.

CONSULTANT WALLIS: Now, this is very interesting. You said the word simulator. Now, a simulator, which normally simulates reality, whereas the DCD simulates design basis space, which is not reality.

Are you satisfied that the simulator will be based on a code that reflects reality?

MR. PIERINGER: Yes, sir.

CONSULTANT WALLIS: You are satisfied?

MR. PIERINGER: The specification is for --

CONSULTANT WALLIS: I haven't seen such a code. I haven't seen --

CHAIRMAN CORRADINI: We're not in the group for a simulator.

CONSULTANT WALLIS: No, but it seems to be an important issue, that if you're going to train operators, you've got to train them on your best estimate of what's really going to happen, not on some design basis space, where you make assumptions and so on and I'm not sure that GEH has the basis for that.

Maybe if they can reassure you that they

do, but I'm not sure what the basis for your simulator is going to be. So, you can train them on something, but you have to have the basis for designing that simulator and making it.

MR. WACHOWIAK: We are in the process of designing that machine.

CONSULTANT WALLIS: Well, are you going to look at that?

MR. WACHOWIAK: We will simulate the plant in the best estimate, realistic and --

CONSULTANT WALLIS: Are we going to get a look at that?

MR. WACHOWIAK: -- manner, appropriate for training operators.

CHAIRMAN CORRADINI: I don't know. I don't think I have that answer -- I don't know that answer, Graham. I think it would be only part of human performance. I don't see -- and I'm not sure the ACRS is ever reviewed simulator --

CONSULTANT WALLIS: I would be very curious as to how that differs from what we've been looking at in the DCD all this time.

CHAIRMAN CORRADINI: Why don't we take that under advisement and get back to you?

CONSULTANT WALLIS: Yes.

MR. WACHOWIAK: That's a good question and it does need to be addressed, because they need to be trained based on what is really expected, not on the bounding case, and we understand that.

CONSULTANT WALLIS: If they get fascinated by the bounding case, they may well make the wrong decisions.

MR. WACHOWIAK: There's difficulty with all simulators.

CONSULTANT WALLIS: But that's very crucial. I mean, that's probably more -- for me, what they actually do and what they're trained to do, it could be taught to be more important than some design basis --

CHAIRMAN CORRADINI: Just to be clear, so, I'll take it up, but just to be clear, out of curiosity, I'm sure we can get anything. Whether they or need or seek our approval is a different matter.

So, I think we can get the information.

MEMBER ABDEL-KHALIK: But the plan is to develop a first principle engineering simulator that is best estimate?

MR. WACHOWIAK: I believe that that's an accurate statement, where we are right now in the project, but once again, that -- I don't believe it's

been finalized, that that's exactly what we're going to do, but I don't know how we would do it any other way.

So, my understanding is, that's the plan right now, is to do a best estimate, first principles engineering simulator.

CONSULTANT WALLIS: I don't see why the simulator isn't part of the design basis.

CHAIRMAN CORRADINI: We'll find out.

MEMBER BLEY: They have to be fast enough to be real time.

CHAIRMAN CORRADINI: Right, we'll find out.

MR. WACHOWIAK: Right, it's got to be real time.

CHAIRMAN CORRADINI: The original simulator -- just a point of information, the original simulators were not first principle.

MR. WACHOWIAK: That's correct, they were -- they were --

CHAIRMAN CORRADINI: But they have now evolved to that point, so, I would assume your answer is where it might be going.

MEMBER ABDEL-KHALIK: But you don't have the basis -- you don't have any other options because you don't have the basis for an empirically based

simulator.

MR. WACHOWIAK: That's why I said that I believe that's the way we're going, but once again, not being the project manager in charge of this project, I can't tell you definitely that that is the way we'll go.

CONSULTANT WALLIS: Hasn't North Anna said, "We won't buy a plan, unless it comes with a really good effective simulator."

MR. WACHOWIAK: I would expect that that would be one of their requirements.

MS. BORSH: Would you like me to ask Dan, to see if he knows any more information?

CHAIRMAN CORRADINI: Why don't we take it under advisement? I think we're off topic.

MR. WACHOWIAK: I think it's part of this application.

CHAIRMAN CORRADINI: Yes, we're off topic. I don't think it is --

CONSULTANT WALLIS: I think it is probably --

CHAIRMAN CORRADINI: It's time to get back to the Subcommittee members about it. I'm surprised you haven't asked a question yet, go ahead.

MEMBER BLEY: No, my question is answered

here.

CHAIRMAN CORRADINI: Okay.

MR. PIERINGER: So, I concluded that the proposed milestone was acceptable and that the standard COL information could be closed and that concludes the presentation, subject to questions.

MEMBER BLEY: Do we know when -- was it asked when the first operator training class as expected to be? That's when you will have the program in place, I see.

MS. BORSH: You're looking for a date or you're -- yes, it will be --

MEMBER BLEY: Is it far in the future, or is it coming up in the --

CHAIRMAN CORRADINI: Why don't you give us a reference to prior to fueling it?

MEMBER BLEY: That's good, how far before fuel load?

MS. BORSH: I think it's about 12 months prior to fuel load. I can look in the -- would you like Dan to --

CHAIRMAN CORRADINI: Identify yourself.

MR. GRECHECK: This is Gene Grecheck with Dominion. The requirement is, is that we have a fully qualified staff in place prior to fuel load. So, we

will have to determine the number of classes of operators that will have to run and that will be several years, certainly, before fuel load.

But the objective would be that we would have licensed operators in place prior to being ready for fuel load.

MEMBER BLEY: And I guess it relates to what's in the FSAR, you say you'll have the program in place before the first training class for operators, so, something on the order of a couple of years, at least.

MR. GRECHECK: Even more than that.

MR. PIERINGER: All right, thank you.

MEMBER ABDEL-KHALIK: Now, the timing is application specific, but the contents of this human performance monitoring program is standard and defined in the DCD, is that correct?

MR. PIERINGER: That's correct.

MEMBER ABDEL-KHALIK: So, your job is to review that data -- is to assure that they actually have implemented whatever is specified in the DCD on the time milestone that they have specified?

MR. PIERINGER: With respect to the -- our COLA application, yes. I just verify that the timing has been specified. In the DCD reviews, I go into the

detail of how their programs implements the NUREG 0711 guidance.

MEMBER BLEY: Is it inferred that the simulator will be operational and available at the time operator training classes start, or is there some point before operations, that it has to be available?

MS. BORSH: Gene, do you know the answer?

MR. GRECHECK: The operator training requires the use of a simulator, but the training program starts before that, because there is academic material and procedural material that the operators can be trained.

So, it's not required that a simulator be running at the time we start a class.

MEMBER BLEY: I don't see anything in the documents that says when the simulator needs to be available to your operator training. Is there a point in time? Is NRC tracking that?

MR. JUNG: This is Mike Jung. The simulator has to be available for the exam, the site specific simulator, plant reference simulator. It only has to be available for the exam.

We know that the exam -- the simulators are being developed and they will use part test simulators, is what we're calling it, for training.

So, as soon as systems are ready, they can go in and training -- the operators, they can go in and manipulate the systems that are there.

But for us to give exams, that's the only requirement we have, is that it's ready for --

CONSULTANT WALLIS: Well, let me ask, well, how does the NRC satisfy itself that what's programmed into the simulator is appropriate?

MR. JUNG: There is a -- we have to review the simulator to verify -- once, in this case, Dominion says that the simulator is a plant referenced simulator, that means to us that it's ready to go. We'll go validate that and how are we going to validate that?

We have several, in the past, for operators, we have a program that we use, an inspection procedure, and we're modifying that to -- we're in the --

CONSULTANT WALLIS: Can you go back to -- there's a way that the various thermal-hydraulic phenomena a model and stuff like -- you go back to PANDA and PANTHERS and all that sort of stuff and say, this is realistic now, or do you just accept whatever you're given as a simulator?

CHAIRMAN CORRADINI: I think -- I mean, I

think this is interesting. I just don't think there is where we need to discuss this, just yet. I think --

CONSULTANT WALLIS: Well, maybe -- I'm just concerned. It seems to me, this is maybe more important that design basis actions, in reality, that they're trained on something real, and then maybe we don't need to discuss it now, but I'm hoping that at some time, maybe there's some reassurance that the simulator is a proper model of the plant, and maybe that's the only message we have to get across at this time.

MEMBER ABDEL-KHALIK: Does the ANSI standard for simulator validation encompass ESBWR or does the standard have to be revised?

MR. WACHOWIAK: That's one I probably have to take a life line on for answering that question. On the phone, is Jeff -- is Jeff Grogan there, or anybody associated with our HFE?

MR. MEEKOFF: Rick, it's Dan Meekoff. I'm good.

MR. WACHOWIAK: So, did you hear that question?

MR. MEEKOFF: Yes, I can state that ANSI 3.5 lays out specifications for fidelity, for

simulators. We intend to comply with the requirements of ANSI 3.5.

So, most of the discussion that you've heard about the fidelity of a simulator and is it based on design basis, accident or on real operation, it's based on real operation, although it will accommodate a design basis accident. Most simulators simulate operating plants and they are based on operating plant performance.

MEMBER ABDEL-KHALIK: But the ANSI standard has a list of transients that would need to be -- that the simulator would have to be verified and/or validated against, and I'm just wondering if that list of transients is at all, appropriate and all inclusive of ESBWR transients.

MR. MEEKOFF: It pretty much is. There are some malfunctions required in ANSI 3.5 that would not apply to the ESBWR, for example, double-ended research piping systems. Since the ESBWR doesn't have research pumps, those type of malfunctions would not be required.

But in terms of overall thermal hydraulic response and those things, yes, those are all covered.

MEMBER ABDEL-KHALIK: But there maybe be transients that are uniquely specific to ESBWR's that

are not listed in the ANSI standard and that's what I'm --

MR. MEEKOFF: They're standard question and in our review, we haven't found any.

MEMBER ABDEL-KHALIK: That's surprising.

MEMBER BLEY: The bulk of -- Chapter 18 is pretty broad. There's a lot of things in the human factors area, including human reliability, analysis and including the interface with HFE.

Essentially, all of that's just required to be actually in place before start up, is that right? It's essentially ITAAC items for much of it?

MR. WACHOWIAK: It's part of the design acceptance criteria.

MEMBER BLEY: So, is the intention to handle that the same with the kind of omnibus report?

MR. WACHOWIAK: Yes.

MEMBER BLEY: That would be submitted?

MR. WACHOWIAK: Yes.

MEMBER BLEY: Okay, and staff would be reviewing that?

MR. WACHOWIAK: Right.

MEMBER BLEY: It won't just be a come and get it kind of thing?

MR. JUNG: Right, we plan on looking at all

of the DAC items. In ITAAC space, there is simple, but DAC, we will look at all the items and they have implementation plans and we'll look at the result summary reports.

MEMBER BLEY: Is your review expected to be the same as if it were submitted on the design cert?

MR. JUNG: That's our plan.

MEMBER BLEY: I think that's important.

MR. WACHOWIAK: That's what we're planning.

MR. KEVERN: And we agree.

MEMBER ABDEL-KHALIK: Back to the issue of ANSI standard for simulator verification validation. Has the staff reached -- has the staff evaluated the ANSI standard, with regard to applicability to ESBWR's or other passive reactors and concluded that the standard is, in deed, appropriate?

MR. JUNG: No, we will -- that will be part of our inspection -- or our review of the plant reference simulator review that we have to do, that we have to verify. So, we will include it. 3.5 isn't accepted by everybody yet, so, there is -- we've been working on getting -- the new reactors, they have to, but the old reactors -- so, we've been working on that standard. It's still going through some changes.

So, when we finalize, I think we'll be

using that as our development of our inspection procedure.

MEMBER ABDEL-KHALIK: And what is the time line for arriving at an acceptable standard for simulator verification validation?

MR. JUNG: When the applicant tells us they're ready for us to come review. We'll have our procedure in place. That's what we're working on as we go -- as we go through our design reviews, that is -- I don't want to say design review. I want to say the operator licensing process.

We're developing that now as well, because that hasn't been developed for new reactors. So, all this is part of our operator licensing development.

So, we know it has to be in place a few years before fuel load. You have to get a couple of classes in there.

MR. KEVERN: That's all, okay. The next topic is Chapter 6, safety features and we'll take a moment to load.

MS. BORSH: Dan, thank you for your help.

MR. MEEKOFF: You bet you. Call me if you need anything.

MS. BORSH: Okay, bye-bye. Okay, to start? Okay, Chapter 6, engineered safety features.

This slide lists the topics that are covered in this chapter. The slide -- the bullets in blue with the asterisk are the sections where we added supplemental information to the DCD.

So, in containment systems, we added new information, control room habitability systems and per-service and in-service inspection and testing, and I'll go over what we added.

In Section 6.2, containment systems, we added a brief discussion about the procedures and activities that would be implemented to prevent debris from affecting the emergency core cooling and long term cooling safety functions.

We added the information to address Reg Guide 1.82, which is water sources for long term recert cooling following a design basis application -- following LOCA.

After -- this is in Rev 1 of our COLA and that's what you all have been reviewing, but subsequent to what we submitted to you, GE has determined that the debris is not a safety issue for our ESBWR design and they submitted an RAI response to the NRC that reflected that position.

The NRC has accepted that response. We had received and RAI that was similar, was on the same

topic of debris and how we're going to control it because the staff was working together, to look at ESBWR DCD and ESBWR COLA's and as a result of the position that GE has taken about the applicability of Reg Guide 1.82 to the ESBWR, we are going to be changing our COLA FSAR to eliminate this discussion and clarify that Reg Guide 1.82 is not applicable.

MEMBER BLEY: Are you going to say anything about -- you're going to get rid of it all or you're going to say anything about your efforts to ensure there are no transients sources of debris left in the containment before start up?

MS. BORSH: Our plan is to eliminate all of it and say that the reg guide is not applicable. That doesn't mean that we aren't going to control debris, just for good operating practices, but it's not required by the guidance or the regulations for our ESBWR design. Okay, all right.

CONSULTANT WALLIS: I need kind of an answer. I mean, you're going to do it anyway. You're going to leave plastic sheets around in containment and that kind of thing, and so, it's sort of saying it's not required, gives the wrong impression that it's not a concern of yours, and I hope you do a good job of removing debris.

MS. BORSH: Yes, and as operators of PWR's, we know all about debris and have very good controls already in place.

MR. SNODDERLY: Excuse me, this is Mike Snodderly the staff. As we discussed yesterday with ESBWR Subcommittee, there is still -- this RAI 6.2.173 that discusses this, is still open and also, there's another RAI that was asked by the reactor systems branch, concerning adverse system interaction.

So, in other words when you turn on the FAPCS system, you're going to re-circulate debris and what impact would that have on safety systems such as fuel clogging, so, GE owes us a response to that.

Now, our expectation in the staff, as we talked about yesterday, there is several important features that the ESBWR has. Number one, they're going to use qualified coatings. They're going to use RMI insulation and they're going to have a stainless steel suppression. So, that's greatly going to reduce the debris.

Our expectation is that they would then take that debris source. They have a -- GE has an approved strainer design, although it was to Reg Guide 1.82 Rev 3, this - the stack strainer design is something that we've analyzed and they've analyzed, so

that they could then pass that debris source through and then look at whether it would have an impact on clogging or not.

Now, if it did impact the fuel and they found that there were some degree of fiber or that would -- that raises a concern from a PRA RTNESS standpoint, then perhaps, there may be -- that may come in then into Chapter 6, where they would have to have some material, cleanliness or control program to control fiber.

But, you know, right now, we've got to wait and see what that response to 6.2.196 is, but that's the kind of thing that I would expect and as we said yesterday, this is something that we're working as part of the DCD and we'll get back to the Committee on this.

CONSULTANT WALLIS: But whatever you do, the utility or the operator of the plant has to take care not to leave stuff around in there.

MR. SNODDERLY: Yes, and then --

CONSULTANT WALLIS: And their responsibility has nothing to do with GEH, nothing to do with the staff, really, it's their job.

MR. SNODDERLY: Well, again, Graham, what we're talking about though is what needs to be in the

regulatory design basis and what doesn't. So, as far as --

CONSULTANT WALLIS: I'm interested in what's safe operation, I mean, and you're sort of hiding behind what's regulatory and it doesn't -- you know, it's not important --

MR. SNODDERLY: Well, I think there's --

CONSULTANT WALLIS: We want to be sure that these guys are going to take care of their containment.

MR. SNODDERLY: Okay, but the --

CONSULTANT WALLIS: Don't leave debris around. That's an important thing.

MR. SNODDERLY: But then what is under the regulatory purview and what is not? So, right now, there is nothing in the DCD where it would be part of their design basis. They may adhere to it, they may not. Again, that's an investment protection, as you said -- as they were talking about.

CONSULTANT WALLIS: But it's not investment protection --

MR. SNODDERLY: Well, right now, Graham it's investment protection. There is nothing in the DCD that says they'd have to have a cleanliness program. We're just trying to make clear -- that's

why I want to make clear to the Committee, what's in their design basis and what's not.

Right now, there is nothing in their design basis that would have them control debris or cleanliness, okay.

Now, there is -- from an operating standpoint, that's -- from an investment protection standpoint, they have a lot of incentive to do that, but it would not be part of our regulatory.

CONSULTANT WALLIS: This is kind of strange. I mean, you're not just protecting investment, are you?

MR. HICKS: We have QA requirements in the QA program that addresses housekeeping and cleanliness requirements. What we're saying is the specific details in the Reg guide, based on what GE has done, are not applicable. But we still have to have cleanliness program requirements, based on our QA program in appendix B of Part 50.

CONSULTANT WALLIS: Well, did it --

MR. HICKS: So, it's not like we're ignoring the situation.

CONSULTANT WALLIS: So, that it doesn't possibly interfere with some --

MR. HICKS: With anything.

CONSULTANT WALLIS: -- long term cooling or something.

MR. HICKS: Right, yes.

MS. BORSH: But that's Mike's point, I think, is that it is not a long term cooling issue for us because of the GEH divide.

CONSULTANT WALLIS: Because it will work anyway.

MS. BORSH: Right.

MEMBER ABDEL-KHALIK: So, this is from a written adverse system interaction. So, we're going to have to look at -- again, this is getting into yesterday.

So, this strainer design is not going to meet Reg Guide 182 Rev 3, but it's not going to be -- it's not going to be commercially -- totally commercial grade with no description and that's what we're going to have to work out with GE, as we resolve RAI 6.2.196 and 6.2.173. So, we're getting closer. We're waiting to see GEH's response and as we said yesterday, we know this is of high interest to the Committee and we're going to make sure we come back with that complete story.

But as of right now, there is no formal cleanliness program and commitments that would be

verified as part of their operational program. So, there is, as far as QA, and that will play into, well, what assumptions we make in that analysis or not.

CONSULTANT WALLIS: Now, the second thing here, I don't understand that. I mean, presumably, someone design the pipe length and it looks as if someone just simply goes in there after it's built and finds out how long it is and that's not what you mean, is it?

MS. BORSH: Well, it is --

CONSULTANT WALLIS: You mean someone goes in there and designs -- however it's built, if it's built erratically, as a spiral or something, you just go in and measure it?

MS. BORSH: No, what we're saying is that the detailed design, at this point, has not been developed.

CONSULTANT WALLIS: But it will be a rational design.

MR. HICKS: Yes, what GE has done is they've specified criteria and they put that -- it's not in the current -- it's not in Rev 5, but it's going to be in Rev 6.

CONSULTANT WALLIS: That makes more sense, rather than just saying you're going to measure it

after it's been built, which is what it looks like.

MS. BORSH: Right.

MEMBER ABDEL-KHALIK: Now, there may be constraints, for example, on the inclinations of various pipes to preclude the possibility of non-condensable gas accumulation in the gravity driven system, cooling system. Where is that commitment made in this application?

MS. BORSH: In the DCD.

MEMBER ABDEL-KHALIK: Is it currently in the DCD, in Rev 5?

MR. HICKS: And there's an ITAAC for it.

MS. BORSH: In 6.4, control room habitability systems, we addressed the COL item by talking about the training and procedures that operators will have for control habitability that address the applicable aspects of generic letter 2003-01 and are consistent with the intent of generic issue 83.

We also provided milestones for when the procedures and training would be implemented.

For the next item, we evaluated the impact of a Unit 2 design basis accident on the Unit 3 control room, and the analysis that we performed concluded that the dose from a Unit 2 DBA is bounded

by the control room dose that --

CONSULTANT WALLIS: Does it go the other way too? If Unit 3 has a DBA, does it affect Unit 2? Don't you have to go the other way as well?

MS. BORSH: Do both --

CONSULTANT WALLIS: Evaluate the impact of any unit on any unit?

MS. BORSH: That's outside the scope of our --

CONSULTANT WALLIS: Outside the scope?

MS. BORSH: Remember, Unit 2 --

MR. HICKS: Yes, the staff has made a determination that those kind of -- that that's under the Unit 1 and 2 license and they'll review that as part of their --

CONSULTANT WALLIS: But you have to do that anyway. You have to get -- as part of that --

MR. HICKS: As part of the other unit, right.

CONSULTANT WALLIS: It just doesn't get forgotten.

MR. HICKS: It's not part of this COLA though.

CONSULTANT WALLIS: As long as it doesn't get forgotten, that's all.

MS. BORSH: All right, so, the conclusion was that we're bounded by the Unit 3 analysis, then we also performed toxic gas analysis of potentially hazardous chemicals for the impact on Unit 3 control room, and we determined that there wouldn't be any adverse impact on control room habitability there either, and that would also be Units 1 and 2 too.

MEMBER ABDEL-KHALIK: Now, what is the interface between that and fire protection?

MS. BORSH: Can you clarify?

MEMBER ABDEL-KHALIK: Toxic gas analysis, potentially hazardous chemicals, impact on control room habitability.

MS. BORSH: You mean, like, from an explosion or fire?

MEMBER ABDEL-KHALIK: From a fire standpoint.

MR. HICKS: DCD identifies all the combustible material and so forth as part of their fire hazards analysis. So, all that stuff, quantities are all specified in the DCD and analyzed and we have to go back --

MS. BORSH: Part of the standard design.

MR. HICKS: It's part of the standard design.

MR. WACHOWIAK: And smoke is addressed in the control room intake design in the DCD.

MEMBER ABDEL-KHALIK: Which chapter?

MR. WACHOWIAK: Chapter 9 and 9A, actually, has the fire hazards analysis in it.

MS. BORSH: Mike, this is Gina. Would you like to add anything to that?

MR. ARCARO: Yes, I guess the smoke is primarily located in the DCD in Section 95, which is the fire protection chapter. The fire hazard analysis, which goes through the combustible lines in the different areas, is in 9A, that's the appendix 9A, and 64 talks a little about the control room habitability interfaces with the fire protection system.

MS. BORSH: All right, let's talk about pre-service and in-service inspection and testing. Chapter 6 discusses it for -- or covers it for class 2 and 3 components and piping. Chapter 5 covers it for class 1 components. So, we'll cover that on another day.

But for 6.6, class 2 and 3 components, we addressed a standard DOL -- or COL item by providing standard program descriptions for the pre-service and in-service test inspection programs and for the flow-

accelerated corrosion monitoring program. This also included implementation milestones for those programs.

There's another COL item where we described our plan for preserving the accessibility for the PSI and ISI NDE of class 2 and 3 austenitic or dissimilar weld metals -- I mean metal weld, sorry, and we defined what the preferred NDE method was going to be for the pre-service and in-service inspections.

CONSULTANT WALLIS: Do you know who you're going to check the leakage rate in the vacuum breakers?

MS. BORSH: Rick?

MR. DIAZ: This is Jesus Diaz from GEH.

MS. WHITE: This is Frostie White from GEH. Yes, we discussed that with you yesterday and we informed you that we would get back to you. Yes, that we would get back to you on that topic.

CONSULTANT WALLIS: Well, I wonder how they're going to - how it's going to be done.

MR. ARCARO: The testing of the vacuum breaker is covered in tech spec, as far as surveillance requirements are concerned. So, that is specified in the tech specs.

MEMBER BLEY: You mean, how, though.

MR. ARCARO: How, the procedure -- that is

an administrative procedure that had to be -- has to comply with tech specs.

CHAIRMAN CORRADINI: So, the answer is, to be determined.

CONSULTANT WALLIS: That's right.

MR. WACHOWIAK: To be determined and most likely, to develop that procedure, you have to have the valve and the back up valve. You have to have the equipment, in order to write the test procedure for testing a specific piece of equipment.

So, it's later. It's not going to be contained in the --

CONSULTANT WALLIS: I'm just thinking, this is a rather important issue.

MR. WACHOWIAK: It is.

CONSULTANT WALLIS: That if I were North Anna, I would want some assurance that I could make the appropriate tests and --

MR. WACHOWIAK: And they've made that perfectly clear to us.

MR. HICKS: I think the engineering people from Dominion have been -- that's one of the - they've been on top of this and have been very interested, right.

MR. WACHOWIAK: They've partnered with us

on developing this --

CONSULTANT WALLIS: Well, there is some radiation exposure and that sort of thing, when you're doing this?

MR. WACHOWIAK: In containment.

MS. BORSH: All right, the last item on here is about another DCD COL item that we addressed by confirming that our system leakage and hydro-static pressure tests will meet the same -- will meet the ASME code requirements, including the limitations that are specified in the NRC regulations and this COL item actually is a COL item from DCD Chapter 5, that we're also addressing. Chapter 5, as I said, is class 1 components. This is class 2 and 3. So, you'll see the COL item addressed in both places, just to confirm that we're going to meet code requirements.

For the SER with open items for Chapter 6, there are no open items here specifically for Chapter 6, but there are -- the SER does talk about -- and I'll probably talk about it, it does refer to two open items that are in Chapter 2, that are related to our talks of gas analysis. There are a couple of RAI's that we're responding to on this topic.

CHAIRMAN CORRADINI: From a site specific standpoint?

MS. BORSH: Correct.

CHAIRMAN CORRADINI: Okay.

MS. BORSH: That's right, and there are two confirmatory items. They're the 6.2 items that we talked about earlier on ITAAC and debris, okay.

MEMBER ABDEL-KHALIK: Is toxic gas analysis going to be a real time analysis that procedurally would tell the operators when they have to abandon the control room?

MR. ARCARO: This is Mike Arcaro from GEH. The toxic gas analysis, the results of that for Dominion/North Anna, was that there is no concern, you know, that would drive you to safety related instrumentation detection and isolation.

So, the results of the analysis are that it's not an issue for North Anna.

MEMBER ABDEL-KHALIK: So, what are the criteria for control room abandonment by the operators?

MS. BORSH: I think the point is that because of the limits, we followed the Reg Guide 1.78 guidance for how to perform the analysis and what we concluded is that there would not be levels of toxic gas that would require any sort of evacuation of the control room. So, it's not an issue for North Anna.

Is that correct, Mike?

MR. ARCARO: Yes, that's correct, Gina. They -- you know, on other slides, if you have concerns with chemicals stored nearby or you know, the chemicals from the existing units, are such that it poses a concern, then it would be a different story.

But for North Anna, we looked at the existing unit chemicals, location, quantity, we have looked at the new chemicals associated with the Unit 3 so far and then the early site permit looked at the chemicals and the transport nearby.

So, considering all those implications on the control room habitability, the answer for North Anna/Dominion is that there is not an issue.

MEMBER ABDEL-KHALIK: So, the word analysis in this bullet refers to what, paper study of some sort?

MR. ARCARO: It was done using the HABIT analysis, so we did a formal analysis with existing chemicals, new chemicals and based on the Reg Guide 178 criteria, you know, we looked at the toxicity limits and the chemical quantities and location and determined, you know, the impact on a control room.

MEMBER ABDEL-KHALIK: Okay, thank you.

MS. BORSH: Okay, thanks, Mike. Now, NRC

will present.

MR. EUDY: Good morning. Mike Eudy, I'm a project manager for the staff. We thank Dominion for their presentation on Chapter 6, engineering safety issues and we are in agreement with what they presented as the content of the -- their application and we're going to have the technical staff go over their review of that information.

Here is the review team and I'll turn it over to you, to take over the discussion.

MR. HAIDER: Thank you, Mike. Good morning. My name is Syed Haider and I am a reviewer in the containment and ventilation branch for boiling water reactors.

Today, I'm going to present Chapter 6 North Anna SER Unit 3 with open items. George and I will be presenting to you.

The first standard item -- standard COL item, 6.2-1-H belongs from containment to inboard and outboard isolation valve.

The applicant was expected to provide the information, so that the DCD criteria for 55, 56 and 57 could be met, because they are required that the isolation valve should be located as close to the containment as practical.

However, the staff found that the piping lengths were not provided by the applicant, so the staff issued an RAI. The RAI was a responded by the applicant, the response was that the piping design was not complete and it was GE's responsibility.

So, the staff also issued RAI and -- it was in the framework of the DCD, and the -- and GE responded that they have - this issue really is of the DCD and they made a commitment to make changes.

The commitment was to delete the current COL item, secondly, they made a commitment to add the design acceptance criteria for locating the isolation valve, rather than providing the actual length within the DCD and the third change was to provide the new ITAAC to confirm that the five design acceptance criteria identified in the tier two, would be verified on the installed isolation valves.

MEMBER ABDEL-KHALIK: Now, what would be the basis for the acceptance criteria?

MR. HAIDER: There were five design acceptance criteria that were based on where the valves were --- would be located, how they would be inspected, how they would be repaired.

MEMBER ABDEL-KHALIK: But we're talking about distance between the containment and the inboard

and outboard isolation valves. What would be the physical criteria that would determine the maximum or minimum acceptable length?

MR. WACHOWIAK: The regulation says it needs to be located as close to containment as practical and in the ITAAC or in the DAC, it says considering required access for in-service inspection of non-isolable welds, appendix J leakage testing, cut out replacement of isolation valves using standard pipefitting tools and equipment, local control, if any, required for that component and for doing valve seat resurfacing in place.

So, we have to allow those things to occur on the specific valve that we're going to put in place. So, the reason that this is put in the piping DAC is, we need to identify which -- the manufacture's characteristics from the valve, so that we can take this into consideration and locate the valve that is close to the containment as possible, given access for these things listed in the ITAAC.

MEMBER ABDEL-KHALIK: But wouldn't there be any plant specific piping lay out or --

MR. WACHOWIAK: No, these are all --

MEMBER ABDEL-KHALIK: -- anything that would affect --

MR. WACHOWIAK: No.

MEMBER ABDEL-KHALIK: -- those criteria?

MR. WACHOWIAK: No, not intended to. The standard design in the nuclear island is suppose to cover all of those things, and they've not taken any departures, so, they're not going to have anything plant specific in the nuclear island.

CONSULTANT WALLIS: So, it's something like 10 feet, is it, or something?

MR. WACHOWIAK: They have to be able to do these things --

CONSULTANT WALLIS: Yes, but typically, it's not very far, is it? Measure of magnitude? You've got to get at it and do all these things, but how much does it take, about three or four pipelines or something? Have you got some idea?

MR. WACHOWIAK: No.

CONSULTANT WALLIS: No idea? It's not 100 feet?

MR. WACHOWIAK: Not 100 feet.

CONSULTANT WALLIS: It's not one foot.

MR. WACHOWIAK: So, somewhere in between.

MEMBER ARMIJO: Take the log, add them up, divide by two.

MR. WACHOWIAK: It really depends on the

valve, you know.

MR. SNODDERLY: This Mike Snodderly again from the staff. So, you found these five criteria reasonable and as Syed said, we're going to go ahead and go do an ITAAC and we would have the ability to look and see if those criteria were used, to locate the valves, and it is going to be dependent of the size of the valve, but yes, the expectation is that it would be on the order of about 10 feet, but it may be more, but if it's more, it would be justified by one of these criteria.

MR. HAIDER: So, as a reserve, the applicant also made a commitment to revise the FSAR to meet the understanding of the DCD changes. The staff considered the issue resolved and removed the COL item as a confirmatory item.

Next slide, please. The next standard supplemental information items 6.2.-1, requires the applicant to provide procedures for inspection to limit containment -- such containment every -- that can be generated inside the containment area or may develop slowly or the period of time left.

It may be caused by the installation being ripped apart, building a LOCA or the containment or concrete or any formed elements chipping apart from

the containment walls.

So, as it is heard, the PCCS cooling pumps are the containment spread cooling pumps which may get clogged and that may adversely affect the long term cooling safety functions.

So, the applicant was expected to submit information regarding the inspection for SER regarding Reg Guide 1.82 that would also include a containment for that.

Next slide, please. But the staff the information was not provided and it issued a COL RAI. The applicant responded that GE was also working on a similar RAI and was formulating a response. So, we issued another RAI to GE and they find it they resolved the issue by taking a position that the separation pool, while not credited in the ESBWR design post-LOCA and the cooling function was not deleted and they proposed three -- making three changes in the ESBWR DCD, stating that the Reg Guide 1.82 is not applicable. The present LOCA -- the present standard supplemental item will be deleted and any references to the cleanliness program will be removed.

The applicant made a commitment to revise the FSAR, to make it consistent with the DCD. The

staff considered the resolution acceptable and has made it a confirmatory item. Next slide, please.

CONSULTANT WALLIS: That seems okay now, but when they're operating, presumably, inspectors in site would be concerned about how much debris is found in the suppression pool, at outages and so on, and they will sort of be aware of -- if material, such as plastic sheets and things are left around, someone is going to be checking up on this, right, and the ROC inspectors will take an interest in it too, presumably.

It's not as if the issue disappears. It just isn't part of this COL.

CHAIRMAN CORRADINI: I think they reminded us, that would be part of the QA --

CONSULTANT WALLIS: Yes, as part of something else, right, okay.

MR. GRECHECK: This is Gene Grecheck again. I just want to reiterate that from a management control standpoint, obviously, all of the things you're talking about will be implemented. I think what we're talking about here is whether it's required as part of the safety analysis assumption or not and what we're saying it that it's not.

But from a normal operating practice

standpoint, clearly, we have programs for material exclusion and for cleanliness and housekeeping. All of those will be implemented.

CONSULTANT WALLIS: Sometimes, it's surprising how much stuff ends up in the suppression pool.

MR. GRECHECK: Yes.

MR. SNODDERLY: Graham, this is Mike Snodderly again. Again, just to follow up though, the difference, Graham, would be that in the cases -- I want to make sure you're not -- that you realize the expectation is not going to be the same as what you're reviewing and seeing for operating plants and other designs.

So, in other words, if a problem was found, it wouldn't result in a shut down or them being outside of the regulatory basis, whereas it would be for these other plants, okay.

MR. HAIDER: The next slide, please. The next is Col item 6.4-1-A required the applicant to develop and implement control room habitability area procedures and operator training program, to meet the applicable specs of NRC Generic Letter 2003-01 and the intent of Generic Issue 83.

The two regulatory requirements

essentially are related to the implements and testing of the control room habitability and also, the subject of requirement that's involved in ensuring the integrity of the control room habitability develop.

So, the applicant made a commitment to develop and implement procedures and operator training program for control room habitability, according to Section 13.2 and 13.5, to meet the applicability aspects of an NRC Generic Letter 2003-01, and Generic Issue 83.

The staff considers this applicant - supplemental information to be adequate and has accepted the resolution. Next slide, please.

CONSULTANT WALLIS: So, would the control room -- is it signed by GEH and the seals on the doors and everything are designed by GEH?

MR. HAIDER: Okay, the next item is a site specific COL item, 6.4-2-A that required the applicant to analyze any toxic gas threat that may come up due to any on site or off site spilling of any hazardous chemicals. So, the applicant made a commitment to identify potential site specific hazardous materials that could affect control room habitability in order to make TMI action plan and GDC 19.

It provided the information regarding the

potential sources of toxic gas material and they included the on site storage for Units 1, 2 and 3 and off site industry and transportation valves within eight miles of Unit 3.

The applicant also provided an evaluation of the toxic gas to the control room off Unit 3. They analyzed carbon dioxide and nitrogen and found that the concentration of carbon dioxide and nitrogen inside the control room did not exceed the toxicity limit and were aligned with the Reg Guide 1.82.

CONSULTANT WALLIS: What's the toxicity limit for nitrogen?

MR. HAIDER: It was the asphyxiation limit for nitrogen.

CONSULTANT WALLIS: Absence of oxygen.

MR. HAIDER: Yes, that's right, the asphyxiation limit for nitrogen would be about 69,000 ppm, while the concentration of nitrogen inside the control room was much smaller.

So, they concluded that because there were no toxic gas or asphyxiation threats for the control room habitability areas, most toxicity gas monitoring instrumentation would be required. Next slide, please.

The staff also conducted an confirmatory

analysis for the technical adequacy of the applicant's toxic gas reserves for the control room habitability area in the Section 6.4 review. The staff confirmatory analysis reviewed HABIT code, the HABIT computer program that essentially monitored the instantaneous release of gas and the resulting vapor cloud going toward the control room habitability area intake and then it would going inside the control room and would get diluted and we found that the onsite nitrogen and carbon dioxide storage were acceptable because the concentration of nitrogen and carbon dioxide inside --

CONSULTANT WALLIS: Very strange, you focus on those two, rather harmless gases. I mean, there must be other things store on site. Doesn't it -- from time to time, the tanks of chlorine or something appear for some purpose?

MR. HAIDER: Yes, that is because of the interface we have with Section 2.2. They identify the toxic gas, potential toxic gas material and we analyze for inside different control room, but they identify carbon dioxide and nitrogen at that stage, but it's still being used and going and existed and complete. So, these are not all the materials. These are the two gases that --

CONSULTANT WALLIS: So, worry about nitrogen, because there's a lot of it used to inert the containment, is that why you're worried about nitrogen?

MR. HAIDER: There is a nitrogen gas storage on the site.

CONSULTANT WALLIS: There's nitrogen everywhere around.

MR. HAIDER: Yes, but that —-

CONSULTANT WALLIS: But there must be large amounts of nitrogen, because they are not in the containment, is that why it's there?

MR. HAIDER: Yes, there is nitrogen stored on site.

CONSULTANT WALLIS: How about the control room?

MEMBER ABDEL-KHALIK: There have been instances where the wrong gas was delivered to a plant, just because the bottles have the same color. Have you addressed that potential?

MR. HAIDER: No, we have not.

MEMBER ABDEL-KHALIK: Is that within your purview?

MR. HAIDER: Not that I know of, as of now.

MEMBER ABDEL-KHALIK: Is that something to

be covered in the DCD?

MR. SNODDERLY: As Gene mentioned, the governing guidance is Reg Guide 1.78, which has a list of materials, a list that needs to be considered. So, you either have it on site or -- and then you have to analyze it, and the only sources that were found for this particular design were nitrogen and carbon dioxide. But they looked at a number of threats.

Now, yours would be a human error and it's not considered. It's possible, but I think it would be a low probability event.

MEMBER ABDEL-KHALIK: It's an operation -- plant operation issue.

MEMBER RYAN: Is there a quality assurance process to check that or was it is?

MS. BORSH: Yes, we have --

MEMBER RYAN: We are aware of incidents where that has actually happened.

MR. SNODDERLY: Yes, but I don't -- I guess what we're saying it, right now, it hasn't risen to a level where the Reg Guide has been revised and that is something that has to be explicitly considered at this point.

CONSULTANT WALLIS: But what is used for FAR suppression in this, water and CO2 or something

else?

MS. BORSH: It's all water for us.

CONSULTANT WALLIS: But there's no freons or there's no kind of other chlorinated things that are used for FAR suppression for computers or something like that?

MR. WACHOWIAK: I don't think so. Mike, are you still on the phone? Do we have anything other than water based fire suppression installed?

MR. ARCARO: Form, for diesel rooms, but for control room habitability areas, we don't use halide. We did evaluate the halide for the existing units in this toxic gas analysis. So, we did look at this.

CONSULTANT WALLIS: So, there is halide?

MR. WACHOWIAK: No, in North Anna 1 and 2, there's halide, possibly.

MS. BORSH: But back to the question about the incorrect delivery, or the delivery of incorrect gases, we have operating experience, programs that we'll be implementing and we have QA programs that we'll be implementing.

So, from the applicant's point of view, we'll be looking at past experience and making sure that we have controls in place to make sure that that

does not occur at our site.

MR. HAIDER: So, the reviewed this not complete and we have certain questions about some screening criteria for some of the hazardous materials for the control room.

Hydrogen sodium hypochloride and hydrogen peroxide are the materials and we still have to review the screening criteria for those materials.

So, if any additional hazardous chemicals are identified in the future, then as reviewers of Section 6.4, we will analyze them for possible toxic gas to the control room habitability.

This site specific supplemental item 6.4-1 required the applicant to make an assessment of the radiological impact of a design basis accident in Units 1 or 2 on the Unit 3 control room.

They provided the additional information. We -- the staff made a confirmatory analysis for the applicant's goals, reserves and also conducted an audit and our findings essentially were that the Unit 3 control room goes from a postulated design basis accident for Unit 1 and 2 complies with the GDC 19 requirements of 5 RAM 30 and that -- and the Unit 3 control room goes from a postulated Unit 1 or 2 DBA, was also bounded by the control room doors from a

postulated Unit 3 DBA, because the Unit 1 or 2 source term would be weaker because of lower terminal power and also, it is located farther from Unit 3.

So, it would lead to lower or higher chi over Q, so the staff considers these COL item to be accepted.

So, before turning over to George Georgiev, I would ask you if you have any other questions?

CHAIRMAN CORRADINI: I'm sorry, I didn't hear you.

MR. HAIDER: If the Committee has any other questions regarding my presentation.

CHAIRMAN CORRADINI: No.

MR. GEORGIEV: Good morning. My name is George Georgiev and I'm with the component integrity branch in the division of engineering and I'll be talking about Section 6.6.

Section 6.6 of the code describes the pre-service and in-service inspection and testing program for class 2 and 3 performance and also provides information about developed for accelerated corrosion problem.

The section also, as shown on this slide, addresses three COL items. COL item 5.1-1-A, system

pressure test, is addressed in Chapter 5 of the COLA and all I would like to mention here is the class 2 and 3 components and hydro-tested during the construction phase of the plan, using their second criteria phase in this section, and after the plan is placed in operation the systems are tested, every refueling outage is using the acceptance criteria phase in Section 11.

Both of these standards are endorsed by the NRC in the Federal Register 10 CFR 50.55(a). Next slide, please.

COL item 6.6-1-A relates to plant specific PSI/ISI and FAC problems and I'll address that PSI had problem in one and the FAC problem separately.

PSI and ISI problems will meet the requirements of ASNI code Section 11, latest edition and addendum endorsed by 10 CFR 50.55(a) on a day 12 months prior to fuel load and therefore, will be in compliance with the NRC regulations which are spelled out in 50.55(a)(g)(2).

Plant specific program is based on EPRI NSAC-202L report which provides the recommendation for effective flow accelerated corrosion problem. The report recommends the six key elements are included in the plan FAC program, mainly corporate commitment,

analysis, industry experience, inspection, engineering management and long term strategy and I'll spend very few time talking on those six important elements.

Corporate commitment, what does it mean? It means you provide the resource, money to fund the program. You delegate authority, who is going to do it and recruit the right people to execute that program. Analysis since many components, may be susceptible to FAC analysis are required and what that means, you look at the flow conditions, look at the pipe configurations, you look where you may have a two phase flow other potential susceptible locations.

The third one is industry experience. You should review periodically, what is happening with the neighbors and look at the plant and take the --

CONSULTANT WALLIS: So, the CHECWORKS thing and you just keep updating it by experience.

MR. GEORGIEV: Yes, CHECWORKS, it's one facet of this. You do everything in the design phase and basically, when you do a pipe layout and component layout, you eliminate the sharp piece, these kinds of things.

But it's more than that, in terms of what EPRI document that we have endorsed. It's required from the agency to do it, and basically, also includes

inspections and those has to be a good inspections, basically, when you lay down your inspection plans, provide for good inspection methods, which is ultra-sonic examination, technicians should be properly qualified to greet and mesh that you lay on the elbows and pieces and other components should be in the proper locations, so you can judge this inspection versus first inspection, and then another element is common engineering judgment, which is periodically evaluate the data. You may do some modeling, you know, to come up with a long term strategy, which is basically to zero in on the most susceptible location and reduce the rights, which is often to the --

CONSULTANT WALLIS: Do we know a lot about FAC now --

MR. GEORGIEV: Oh, we do.

CONSULTANT WALLIS: But GEH has designed this system so that it's much less susceptible to FAC and the older plants, is that the case?

MR. GEORGIEV: Yes, that is the case, at least from material point of view. We haven't seen the --

CONSULTANT WALLIS: That's also the flow point of view.

MR. GEORGIEV: And the flow point of view,

but it does the material selections and other engineering tools that they are using in the design, they have said the right thing, yes, this FAC material system, such as three-and-a-quarter, which is known to be good materials.

MEMBER ABDEL-KHALIK: Are there any unique inspection requirements for the steam dryers that draw on experience from the operating fleet?

MR. GEORGIEV: Well, this is operation problem and this stage on the chapter, we are reviewing the problematic aspects and all we want to make sure that all important elements are factored into the program.

There are commitments and now -- as to the milestone and when we'll be finalized, but when it's finally finalized, all these central locations would good basis why they are selected should mean they're FAC problem that somebody will be responsible to run it and so forth.

So, the answer is, I don't know because I haven't seen finalized FAC problem. The operating experience, maybe the applicant can tell you what they did to the other units

MEMBER ABDEL-KHALIK: What about GEH now?

MR. WACHOWIAK: We're still working with

the staff on closure of the steam dryer issues. It's one of our open items that remains and I don't know for sure if flow-accelerated corrosion is the issue in testing. I think it's a vibrational testing and that's also being addressed under that open item.

So, we're still having discussions with the staff and it's being done in conjunction with the open items that there are with the BWR fleet right now, that's -- the same groups of people are addressing it for ESBWR and other BWR's.

MEMBER ARMIJO: I don't understand why FAC is still a big program as part of your COL, if you really know the -- there are resistant materials, hasn't -- and the DCD doesn't GE specify resistant materials for -- so, that you put that issue aside? Why use susceptible materials at all?

MS. BORSH: I don't think it's a matter of using susceptible materials, as much as it is, just the guidance out there, expecting us to have a flow-accelerated corrosion program.

MEMBER ARMIJO: And I don't disagree with that, but to be less burdensome, if you take the right materials and design the things properly, that should be in the DCD.

MR. WACHOWIAK: And I think the material

specifications for these are in the DCD.

MEMBER ARMIJO: That's your goal?

MR. WACHOWIAK: Yes.

MEMBER ARMIJO: Thank you.

MR. GEORGIEV: So, to summarize on this problem, the COLA provided the adequate information about each of those elements and therefore, FAC problems follow the recommendations of EPRI and SAC, to help -- to identify susceptible components and in addition, PSI baseline will be performed prior.

The next COL item, 6.6-2-A related to accessibility. Accessibility is required in order to perform PSI and ISI examinations. The applicant has stated that during the construction phase of the project, it will be implemented, change control procedures that will ensure that few changes in modification are subject to the same review and approval process as the original design.

Therefore, for PSI and ISI affecting Class 2 and 3 components will be maintained as required by 10 CFR 50.55(a)(g)(3).

Next slide. That's the milestones and then the program will be implemented and PSI program will be implemented prior to initial plant start-up. ISI program will be implemented prior to fuel load.

What that means, we'll be ready prior to fuel load, so they can file with the NRC and FAC program will be implemented also prior to fuel load. In all these three cases, we find that reasonable because more or less, that's how it has been done, historically, and this concludes my presentation.

CHAIRMAN CORRADINI: Questions? Okay, thank you. We're a bit ahead of schedule, but we have a few chapters to go that will become more complex.

I'd like to break and start at 12:45 p.m. For an hour, we'll be off.

(Whereupon, the above-entitled matter went off the record at 11:48 a.m. and resumed at 12:45 p.m.)

CHAIRMAN CORRADINI: Okay.

MS. BORSH: Okay. Let's talk about Chapter 15.

CHAIRMAN CORRADINI: Let's do that.

MS. BORSH: Accident analysis. Chapter 15 is titled "Safety Analysis." It covers the topics that are listed on this slide. Most of the information is included in the DCD. We added information to the Analysis of Infrequent Events section, and then we added a new section to the DCD, which is called "ESP Information," and I'll explain

that in a moment.

In Section 15.3, Analysis of Infrequent Events, we added a statement that says that procedures will be used and discuss the use of nuclear instrumentation to aid in detecting a possible mislocated fuel bundle after fueling operations, and we added this information to address an acceptance criteria that's in the NRC's SRP.

Section 15.6, this is our first opportunity to talk with you about variances from the ESP or the SSAR. So we added a new section, 15.6, titled ESP Information, in order to incorporate the accidents that are in the ESP applications' SSAR, and as I had said when we were talking about Chapter 1, we need to do that in order to comply with the regulations.

So we incorporated the information from SSAR Chapter 15, except that the information related to the ESBWR accident is replaced by DCD Rev 5 information, rather than DCD Rev 1 information, okay. The SSAR was written years ago and was based on DCD Rev 1. All right.

Now, by doing this, we have created a variance from both the early site permit and from the SSAR that's in our ESP application, because the new

numbers in Chapter 15 for source term are not bounded by the numbers that we have in the ESP or the SSAR. Okay.

So, what we had to do -- the other part of this, too, is that --

CHAIRMAN CORRADINI: Can I say it back to you a different way?

MS. BORSH: Sure.

CHAIRMAN CORRADINI: So you've made it logical, but it's at odds with the previous one.

MS. BORSH: Yes.

CHAIRMAN CORRADINI: That is, you replaced what needed to be replaced, but that required the variance.

MS. BORSH: Yes, that's correct. That's correct, and so then what we did is we evaluated the variance and what we had to do. We compared those known numbers, and we found that we're still okay. This variance is acceptable, because we're still bounded by the information in the DCD, and so our numbers are still within the regulatory limits as far as those go.

CHAIRMAN CORRADINI: What was used I the ESP that now is outdated? It was a -- there was a search term, an estimated search term? Just to get to

one technical question and feel like we've --

MS. BORSH: Yes, the early site permit itself listed the source terms and the values of the source terms, and that has been superceded by the information that's in DCD.

CHAIRMAN CORRADINI: That I understand, but what was the -- what was the -- where did the source term for the ESP come from that it became inapplicable?

MS. BORSH: It came from Rev 1. You know, we created --

CHAIRMAN CORRADINI: It came from the Rev 1 of the DCD?

MS. BORSH: Right.

CHAIRMAN CORRADINI: Okay. I misunderstood that.

MS. BORSH: There's other -- I'm not even going to go there. All right. We have no open items and no confirmatory items for our Chapter 15, and, with that --

MEMBER ABDEL-KHALIK: Why is the detection of a mislocated fuel pump a site-specific procedure?

MS. BORSH: Because we added the information to the SRP acceptance criteria. It is something that another utility may or may not feel the

need to do in order to fully comply with the SRP, so we chose to make it site-specific.

CONSULTANT WALLIS: It's the procedure that's site-specific, isn't it?

MR. HICKS: Right. The DCD didn't cover it, because it was procedural in nature.

CONSULTANT WALLIS: It's the procedure that's --

MR. HICKS: So it's not in the DCD, and so when we did our SRP conformance review, it was a procedural criteria. It wasn't covered in the DCD, so we picked it up in the COLA.

MS. BORSH: But we could have labeled it a standard statement.

MR. HICKS: It is labeled a standard.

MEMBER ABDEL-KHALIK: No, it's NAPS.

MS. BORSH: Oh, I'm sorry.

CHAIRMAN CORRADINI: There's a mistake.

MS. BORSH: There's a mistake.

MR. HICKS: It's standard.

CHAIRMAN CORRADINI: For the slide? Anyway, it's a standard.

MR. HICKS: It is standard. It's standard for posts.

CHAIRMAN CORRADINI: Should we turn to the

staff now? Okay.

MR. EUDY: I am the project manager for the staff. We appreciate Dominion's presentation on this chapter, and we're going to turn it over to the staff to discuss what their evaluation is.

CHAIRMAN CORRADINI: So the technical evaluation by the staff for Chapter 15, and I'll turn it over to Jay Lee.

MR. LEE: Okay. Good afternoon. My name is Jay Lee. You know, somehow today it seems I'm losing my voice, so I just have to talk louder, and I hope you can hear me.

CHAIRMAN CORRADINI: You're fine. You're good.

MR. LEE: You know, FSAR, the Chapter 15 has just a half-page writeup, and it just states that it incorporated by reference three important documents. For the plant design, they referenced, of course, ESBWR DCD, Revision 5. For site safety, they are incorporated by reference. Site Safety Analysis Report, I call it.

Now, this early site permit, as we just discussed, Revision 9 is dated September 2006. At that time, the ESBWR Revision 1 was only available at that time for them, so they obviously referenced that,

and this year the FSAR Revision 1 decided they'd like to replace not only source term but all the chi over Q values, anything related to the site.

We replaced that by Revision 5, information in Revision 5. We read that in Revision 1. So then those two are the documents. They are incorporated by reference, again, one for the plant design, the other one for site safety. There are no COL information items or open items or conformatory items or post-COL activity items, because this is outside of ESBWR DCD.

Today's presentation is for the radiological consequence analysis of the postulated design basis accidents, because this is site-related, as well as design. I know, Dr. Kress, you are interested in a reactor severe accident.

CONSULTANT KRESS: Yes, I am.

MR. LEE: You are dealing with a population dose and the cancer totalities and all that. They are discussed. That's environmental side. Today's discussion is really design basis accident, so I just want to make that clear. And all other remaining parts of Chapter 15 are incorporated by reference.

CONSULTANT WALLIS: This is the design basis accident, which, if you actually follow it

through, is very unlikely to happen anything like as described.

MR. LEE: You know, I have a slide for you, Dr. Wallis.

CHAIRMAN CORRADINI: These are all for the consultants. Good. Let's keep on going.

MR. LEE: Okay, these are the applicable regulations and guidelines, and 10 CFR 52.79 is for the COL applicant. We have a non-seismic siting criteria in Part 100 and so forth. These are all applicable regulations and guidance.

Among these regulations there is two, the most relevant regulations for this radiological consequence analysis, 10 CFR 52.79 is for the COL application, and this 10 CFR 52.47 is for the design certification for GEH, but these two regulations are identical in the wording.

I just -- this slide is really for you, Dr. Wallis. You asked us before why we do all this, but this regulation says, "Applicant shall perform an evaluation and analysis of the postulated fission product release . . . to evaluate the offsite radiological consequences." It further states, "The fission product release assumed for this evaluation should be based upon a major accident."

It further states that such a major accident is assumed to be result of substantial core melt with a subsequent release into the containment of appreciable quantities of fission products. This is a source term, and the ESBWR designed the standard methods, and not only ESBWR but AP-1000, ABWR, all the rest, met this requirement with a hypothetical reactor site, because most specific reactor sitings are associated with a standard reactor site.

CONSULTANT KRESS: They used the 1465 source terms.

MR. LEE: Yes, they did. Does that answer, Dr. Wallis, your question, previous question why we are doing this?

CONSULTANT WALLIS: Well, I'm thinking.

MR. LEE: You can ask me later.

CHAIRMAN CORRADINI: He'll never answer a question just because you may have a question. Let's keep on going.

MR. LEE: Before he raises a question. So, regulatory issue becomes does the ESBWR design provide adequate mitigation or radiological consequences in the event of a major reactor accident to protect public health and safety at the proposed North Anna site, as demonstrated by meeting the siting

dose acceptance criteria specified in 10 CRF 100 and 10 CRF 52.79, which is 25 rem TEDE at the exclusion area boundary, 25 rem TEDE at the low population zone, and 5 rem TEDE in the control room.

Okay, this is the equation we use, dose calculations. This is simplified, basic equation. We do all this by writing a computer code. Wait a minute. Okay.

CONSULTANT WALLIS: I was just wondering how you know the breathing rates.

MR. LEE: It's a standard. We have breathing rate for first eight hours, the breathing rate for first day, and breathing rate for the 30 days. We use four terms, four major terms to calculate the radiation dose. This happened to be a committed effective dose equivalent, which is internal dose.

The first term is dose conversion factor. We use the federal guidance, which is issued by EPA and compiled by Oak Ridge National Lab. Keith Edmond did all this. So this is a standard handbook type volume. Everyone's -- GEH used this volume, and North Anna used this, and everybody uses A volume.

The next term is a source term. Now, this is unique to the ESBWR design. This gives the

function of time and also is dependent on the nuclei release rate, you know, its chemistry, and each nuclei release rate is different at different ions, so this is a source term. The breathing rate is, again, like a handbook. It's in the Regulatory Guide 1.183, so these first three terms are same, so it's GEH as well as North Anna is the same number.

Now, last term, chi over Q values, is site-specific, okay, so ESBWR, they don't have a site, so therefore they used a set of hypotheticals chi over Q values while the other used very site-specific chi over Q values. So these last four terms, they're site-specific.

I'd like to point out Reg Guide 1.206 says exactly -- I quote it. "The COL applicant," such as North Anna, "should show that site-specific short-term chi over Q volumes," which usually are found in low population zone and control room, "are within those values, chi over Q values assumed in the DCD." That's in the Regulatory Guide.

The conclusion is just like what I said. I'm repeating. The North Anna site-specific offsite and control room chi over Q values fall within those values used by the ESBWR, Rev. 5. We will discuss these chi over Q values in Chapter 2 later, I think in

August sometime this year. We'll get back to you to discuss Chapter 2, and at that time we will be comparing the chi over Q values and the GE use, GEH used and the ones that North Anna used.

So, the second bullet says, "Therefore, the North Anna site-specific offsite and control room total doses for each DBAs are lower than the ESBWR," because chi over Q values are lower. All other things are same.

Okay. Furthermore, ESBWR DCD, Revision 5, Chapter 15 radiological dose analysis show that they met the dose acceptance criteria using hypothetical chi over Q. Therefore, the North Anna demonstrated that the DBA offsite and the control room radiological consequences also meet the regulatory limit, because their -- simply, their chi over Q values are within --

CONSULTANT WALLIS: Always less.

MR. LEE: Always less, yes. Okay. Each time period, they are less. The last bullet --

CONSULTANT WALLIS: They show uniformly less by about the same amount?

MR. LEE: No, they are different.

CONSULTANT WALLIS: It varies?

MR. LEE: Yes. It's affected by -- it depends.

CONSULTANT WALLIS: But every time they are less?

MR. LEE: Yes. Every time they are less. Therefore, they are always less. The last bullet item is just a caveat here saying that these conclusions are based on information provided in the ESBWR DCD, Revision 5, and are subject to future change in forthcoming Revision 6 and so forth.

Any questions?

MEMBER ABDEL-KHALIK: Yes. We heard earlier --

MR. LEE: Yes.

MEMBER ABDEL-KHALIK: -- that the location of the MSIVs is a plant-specific parameter within an acceptable range that is specified. I assume that within that range, the calculated plant response to hypothetical accidents may not be impacted by the exact location of the MSIVs.

MR. LEE: It is not of particular interest for the North Anna case. They are not creating an efficient part, the partition inside a main steam line as well as an MSIV, so the relative location of MSIV outside of a container doesn't commute the effect.

MEMBER ABDEL-KHALIK: Okay, so my question, really, is is there a formal process that you go

through by which you evaluate the plant-specific parameters to show that indeed they have no impact on the calculated response as presented in the DCD?

MR. LEE: We do that.

MEMBER ABDEL-KHALIK: And what is that formal process, and how is it specified?

MR. LEE: It's in the computer course. We coded in the length of the pipe, size of MSIVs, and it's according to the whatever parameter.

MEMBER ABDEL-KHALIK: I didn't present my question as a -- I only offered that as an example. I would like to understand the process by which you determine how a plant-specific parameter is evaluated insofar as it may impact the calculated response as presented in the DCD, in general.

MR. LEE: Those are all DCD values. It's not related to the site at all.

MEMBER ABDEL-KHALIK: I don't think you understand my question yet.

MR. LEE: In Chapter 2, we do compare the design value against the site-specific characteristics. Still I've not answered your question?

MEMBER ABDEL-KHALIK: No, you're not. I'm looking for a process to make sure that nothing falls

through the cracks. The main part of it is there are some parameters. Maybe in this case there aren't that many parameters that are site-specific that are perhaps deviations or fall within specified ranges that are specified in the DCD, and the question, how do you as a reviewer look at those site-specific parameters and show that they have no impact on the calculated response as presented in the DCD?

MR. LEE: Okay, let me try this way to answer your question. We do independent dose calculations using the DCD parameters, okay. We also calculate the consequences using site-specific values. We compare to them. All kind of levels.

MEMBER ABDEL-KHALIK: Let's say they come back and say, "Well, I don't like the piping layout specified in the DCD, and we're going to just use our own piping layout." Is there a formal process by which you go through and evaluate how that impacts the calculated response of the plant to various hypothetical accidents or anticipated operational occurrences?

MR. LEE: The example you made like a pipe length doesn't come into the relevance of dose calculation.

MS. BORSH: May I offer something?

MEMBER ABDEL-KHALIK: Yes, ma'am.

MS. BORSH: In the DCD, GEH has identified all of the site-specific parameters that are -- that would have an impact on the content of the DCD or the responses, okay, that are generated as a result of the assumptions made in the DCD.

We have taken no departures from any of the content of the DCD, and we have in Chapter 2 of our FSAR compared all of the site parameters, so there is nothing -- as Jay is saying, there is nothing outside the scope of what's in the DCD that should impact us.

MEMBER ABDEL-KHALIK: I think I can --

MS. BORSH: If we make a change to -- if we don't accept these --

MEMBER ABDEL-KHALIK: Go ahead.

MS. BORSH: If we don't accept the standard design, if we decided to do what you suggested and took a deviation from the standard piping layout when it's designed, then we have to do an evaluation of that change and determine if -- as an applicant, and determine if there is any impact on what we have put in our FSAR.

MEMBER ABDEL-KHALIK: Nearly all of the material presented so far today is sort of process-

oriented, and that's why my question is also process-oriented, and it's a much more generic question as to whether or not the processes used by the staff would actually capture the impact of, A, site-specific deviations in general on the calculated plant response.

MS. WHITE: This is Frostier White from GEH. I think I might be able to answer your question.

MEMBER ABDEL-KHALIK: Yes, ma'am.

MS. WHITE: In your example of MSIV location, we do account for a certain amount of bypass leakage in our dose calculations, and that is conservatively chosen to encompass where that location of that containment isolation valve might be.

So, in terms of site-specificity, if they chose to locate it -- let's say we chose a 16-foot location for the MSIV, and they chose a 10-foot location for whatever reason, they would have to take -- let me make sure I get the right word -- departure from our DCD and justify that on their own, probably with our help, of course, but that's how that would account for things like that. Does that answer your question?

MEMBER ABDEL-KHALIK: To some extent. I just want to make sure that the process really doesn't

allow things to fall through the cracks, and so far I'm not really convinced.

MR. HICKS: Well, the last piece of that is that we're obligated, obviously, to notify the staff of these types of -- of a departure like that, so, you know, like our Part 7, for example, is intended to capture all of the departures. Under regulation we are required to notify staff, so the staff would become aware of that type of situation.

MEMBER ABDEL-KHALIK: But is the staff -- is the staff's evaluation process sufficiently formal to go through and evaluate each one of these deviations?

MR. LEE: Again, this deviation is a valuable input to the dose calculation, so if the departure or whatever the parameter they made would change our input to the dose calculation.

MEMBER ABDEL-KHALIK: Okay. Let's just go on. Thank you.

CONSULTANT WALLIS: Can I ask a simpler question, or did you ask yours?

CHAIRMAN CORRADINI: We're done over here. Go ahead.

CONSULTANT WALLIS: You're done over there?

CHAIRMAN CORRADINI: Yes.

CONSULTANT WALLIS: They followed the DCD.

MR. LEE: Yes.

CONSULTANT WALLIS: And they come up with lower chi over Q values than DCD. I just want to know what is the physical reasoning why they follow something, and yet they come up with lower values. Can you just explain it simply why that happened?

MR. LEE: DEH values are hypothetical values. They just pick the correct, but they are based on looking over currently operating reactor sites.

MR. HICKS: They tend to conservatively give the wind and meteorology to get a higher dose.

CONSULTANT WALLIS: So there's less conservatism in the North Anna calculation?

MR. LEE: To make sure they can both -- I'm sorry.

CONSULTANT WALLIS: Go ahead.

MR. LEE: Make sure that they can locate their design in any available site, not only within --

CONSULTANT WALLIS: So to make sure, energy is more favorable at North Anna?

MR. LEE: Yes.

CONSULTANT WALLIS: That's it. Thank you. Now you've explained it. That's what I wanted to

know.

CONSULTANT KRESS: And they've measured that over a number of years.

MR. HICKS: That data.

CONSULTANT WALLIS: Of course, whoever is responsible for the weather may decide --

CONSULTANT KRESS: To change that.

CONSULTANT WALLIS: -- to change that, right?

CONSULTANT KRESS: Well, they haven't changed it over the last two years or so.

CONSULTANT WALLIS: Well, there are trends in weather. I guess you'll be watching that.

CONSULTANT KRESS: As we all will.

CONSULTANT WALLIS: As of now, this is more favorable a site than the generic one or the grounding one. Okay. Thank you. Yes, for chi over Q.

CONSULTANT KRESS: You have to go to their impact statement.

CHAIRMAN CORRADINI: Other questions? Okay, let's move on to Chapter 17. All right. GEH is up.

MS. BORSH: Okay, Chapter 17, Quality Assurance. These are the topics of this slide that are listed in Chapter 17 of the DCD. The first four

bullets are actually sections of the DCD. The last two bullets are two sections that we added in the COLA section, session, 17.5, which provides and overall description of the QA Program for design certification early site permitting activities and COL applicant activities, and then 17.6 addresses our Maintenance Rule Program.

Now, what you'll see is some of these subjects look very -- look redundant, and they are. It was a matter of GEH following the format of guidance, NRC guidance documents that are out there and trying to cover all the options about how a QA Program could be presented in an FSAR, but I'll explain that to you later.

All right. So, essentially 17.1 of our FSAR incorporates the QA ESBWR that was applied during the preparation of the early site permit application. Also, we added supplemental information to refer to section 17.5 for the QA ESBWR that we applied during our COLA preparation and during site-specific design activities.

Section 17.2, entitled "QA During Construction and Operation," and, again, to address a couple of COL items that are in the DCD, we refer to Section 17.5 for a description of the QA ESBWR that we

will be applying during construction and operations phases, and we refer to Section 17.5 for a QA ESBWR description for the program we're applying to design activities that are required to adapt the certified plant design to the North Anna plant-specific implementation activities.

17.3 is another placeholder where in the DCD you could provide your QA ESBWR description if you wanted to. We chose not to. We said, "Go see Section 17.5 for the program description."

CONSULTANT WALLIS: So the essence of all of this is referring to Section 17.5.

MS. BORSH: So far, so good. Yes, 17.1 has GEH's QA ESBWR description that they used for the DCD, but everything else sends you to 17.5, but before you get to 17.5, you have to stop at 17.4, because that's where we have the Reliability Assurance Program during the design phase.

And there is a COL item in that section that asks us to provide a description of the operational reliability assurance activities that we perform during operation activities, of course, and we explain that the objectives of reliability assurance are integrated fully into our QA ESBWR our Maintenance Rule Program, other operational programs we have such

as the ISI/IST Programs.

MEMBER BLEY: But in 17.4-9 --

MS. BORSH: Yes?

MEMBER BLEY: -- refer us -- which is the operational reliability assurance activities, you refer us back to 17.4-1, which is the one you started with, which is during design phase, so the during design phase is really everything that we --

MR. HICKS: Well, 17.4-1 out of that COL -- the COL item is actually in 17.4-1.

MEMBER BLEY: Right.

MR. HICKS: That's why we inserted -- if you look in the FSAR, that's where we inserted how we were going to address that, so when you got to 17.4-9, we just referred back to 17.4-1.

MEMBER BLEY: Okay, but what you're really referring -- let me get this straight. What you're really referring to isn't the bulk of 17.4-1 from the DCD, which is the process you're supposed to go through, but you're really because of this referring to the QA Program, 17.5?

MR. HICKS: Well, the bulk of 17.4-1, actually, is a COL item, after that third paragraph in the DCD there.

MEMBER BLEY: Yes.

MR. HICKS: All that -- all that is replaced by our test in 17.4-1. Do you see there? It says, "Replace the third paragraph."

MEMBER BLEY: Yes.

MR. HICKS: So all that comes out, and our information replaces it that we describe.

MEMBER BLEY: Okay. Now, for all the -- in the DCD, that 17.4-1 is the introduction, and then comes a whole series of sections giving details on the DRAP Program.

MR. HICKS: Right.

MEMBER BLEY: Do those still apply? Is that what you're carrying out, or are we really referred to the QA manual for --

MR. HICKS: Well, that operational piece for the COL item, it's what's in 17.4-1, and then in our writeup for 17.4-1 we talk about the QA manual maintenance rule, those types of things.

MEMBER BLEY: Okay.

MR. HICKS: The rest of these are still incorporated by reference, the rest of these sections.

MEMBER BLEY: Okay.

MR. HICKS: 17.4-2, 4-3.

MEMBER BLEY: I guess my problem is, and you can help me with this, in 17.4-9, which refers you

back to the COL, you're supposed to be setting up the operational program, but all of the rest of this that's incorporated by reference is telling me what kind of data to collect and how to set up the treatment program for RTNSS and all that kind of stuff. It doesn't really do that. It tells you how to do that.

In the operational program, you should be actually implementing that, and that doesn't need to be in this COL application. My impression of the way the DCD is written that you refer to is that when you get to the operational phase of the COL application, these programs should be in place, and you guys should be reviewing them for staff, and I don't see that they are actually in place from the things I'm reading here. It looks like I'm missing the boat from everybody's faces.

MR. HICKS: Programs will be in place before fuel load. Is that --

MR. HAMZEHEE: Dennis, I think that there's an earlier stage of these programs that right now the COL applicant has to describe how much of the DCD RTNESS process and the RAP program applies to them, and then prior to that initial fuel load, there are a number of actions that they have to take, one of which

is to ensure that, as you said, if they decide to include the liability assurance program into the other operational programs, then they have to demonstrate how they're going to do that. And then they have to somehow include Reliability Assurance Program, for instance, in the maintenance rule, in the QA Program, in other thing such as ISI/IST, but right now they don't need to have the details of all those.

CHAIRMAN CORRADINI: So where is that? I guess that, if that's the case, then I guess Dennis's point would be where does one -- where does the staff pick that up to feel comfortable that what they're rolling out makes sense?

MR. HAMZEHEE: That's a very good question. There is an ITAAC associated with this.

CHAIRMAN CORRADINI: I figured that. Okay.

MR. HAMZEHEE: And that ITAAC is going to do this.

MEMBER BLEY: Okay. That's how they put it going in, but as I read this, it sounded like it was saying the COL holder should be putting it in place at this point in time, so that's not really true.

MR. HAMZEHEE: They're not the holder yet. They're applicant.

MEMBER BLEY: Go ahead.

MR. BROWN: Can you state your name for the record?

MR. HAMZEHEE: This is Hussein Hamzehee, Chief of the PRA branch in the Office of Nuclear Reactors.

MEMBER BLEY: Let me ask one last thing about all this, because as I read through this, it told all the kinds of data you should be collecting and lots of things of that sort. These you've referred to. It nowhere quite says, that I've picked up, exactly what your treatment of the RTNSS -- regulatory treatment of non-safety equipment actually is going to be.

Is the treatment just the collecting of the data that's described in here, or is there some other special treatment? You know, why are we flagging the RTNSS, and what's being done? Is it just tracking the data to show that the PRA is up to date?

MR. HICKS: The RTNSS?

MEMBER BLEY: Yes.

MR. HICKS: It's much broader than that, and Rick can probably talk about that.

MR. WACHOWIAK: I can. So just let me start with a small preamble for this. Notice what

they said in there, 17.4-1, is that the operational reliability assurance activities are covered by other programs.

MEMBER BLEY: Right.

MR. WACHOWIAK: They're not creating a special program for it. It will be covered in QA, maintenance rule, and other -- Right, ISI/IST. It's covered somewhere, okay, so there are different pieces of treatment, okay. When you buy a piece of equipment that is covered in treatment, RTNSS treatment, because RTNSS is the treatment, we have to specify a reliability, and that comes from one of the reports that --

MEMBER BLEY: But that's specified in here.

MR. WACHOWIAK: It's specified there. We have to follow a QA program. We can't -- it can't be a standard commercial QA program, so that's covered in their QA ESBWR, and the equipment that is covered by RTNSS in the design is marked as special in the GE nomenclature. I think that's covered in Chapter 1 or 3.

MEMBER BLEY: That's actually in here, too.

MR. WACHOWIAK: That's in there, too. Okay, so that's covered there, so you know which things that are. So in the QA ESBWR, you have certain

things. Under the description of reliability assurance in Chapter 19, you get what some of the special requirements are. So, for example, for things that are required to run the fans that we talked so much about yesterday and to run the control room habitability system, we decided that those need to be immediately available following a seismic event.

Therefore, some of the treatment for those pieces of equipment is they need to be able to withstand a seismic event, and that's listed in 19A. There are other things that we didn't credit following a seismic event, and there would be no seismic treatment for those. They would be just the augmented QA that you had in the QA ESBWR. You have to look at the -- for RTNSS treatment, you have to look at the RTNSS area.

Now, there are two other things with that, one, reliability assurance when you buy it. You need to buy reliable components, so that would be part of the specification. Then, the operational phase, you have to make sure it remains reliable. That's where you start collecting data, and that collection is all going to be done under the Maintenance Rule Program, and you'll see in 17.6, where they describe the Maintenance Rule Program, it says all of the

components identified in the DRAP should be treated as HSSCs in the Maintenance Rule Program, because that's how we ensure that they get the monitoring they're supposed to have.

So it's tied into a bunch of programs. It was already -- essentially what we were saying was it was already covered by things that were specified elsewhere in the DCD, and we didn't need to have a new thing called Operational Reliability Assurance Program. It was already covered, but what we were attempting to do here is try to give a little -- be aware that these things are covered.

MR. HAMZEHEE: And, Dennis, you may know that the scope of the Reliability Assurance Program is not limited to RTNSS. RTNSS is portion of the Reliability Assurance Program, and RTNSS only applies to passive system designs, but RAP provides the treatment for all those HSSCs that perform real significant functions, some of which for passive system designs could be RTNSS.

MEMBER BLEY: And as this, as the DCD Part 17.4 points out, all the key equipment from the PRA are part of that.

MR. WACHOWIAK: The equipment --

MEMBER BLEY: Part of this program is to

ensure that the PRA remains valid.

MR. WACHOWIAK: The equipment modeled in the PRA whose failure could significantly degrade our margins to the acceptance criteria for the PRA would be in that program.

MR. HAMZEHEE: I think you're right. I would like to change it slightly. It's to ensure that the risk insights and PRA assumptions are still valid when they do the Reliability Assurance Program --

MEMBER BLEY: Okay.

MR. HAMZEHEE: -- because that's how they -- one of the elements that they use to define risk-significant SSCs is the results of the PRAs and assumptions in PRAs, but they also have to apply other methods such as expert panel type approach, deterministic, in case there are things that are not covered under the scope of the PRA.

MEMBER BLEY: Okay. The words I read make it sound like the expert panel starts with this you mentioned and maybe throws some away. I guess they're not really significant, even though maybe they were in the PRA.

MR. WACHOWIAK: The process is similar to what was done in the maintenance rule and for existing pipe, and so, in general, you start with the list, and

you add to it. It's a higher burden of proof to take things off the list.

MEMBER BLEY: And all of this happens before startup. It's not done at this stage.

MR. HAMZEHEE: Well, as someone may have mentioned, there are two phases of Reliability Assurance Program. We call it DRAP, design phase of Reliability Assurance Program, and we call it ORAP, operational phase of the Reliability Assurance Program.

Right now, the focus as part of ESBWR DCD in COL application is the DRAP, design phase of the Reliability Assurance Program. That means --

MEMBER BLEY: Does it include the preliminary identification of the equipment?

MR. HAMZEHEE: Yes.

MEMBER BLEY: Okay.

MR. HAMZEHEE: Oh, yes, that is a major element of that. They have to tell us how and then identify the risk-significant SSCs --

MEMBER BLEY: Okay.

MR. HAMZEHEE: -- with clear clarification as to how those SSCs became risk-significant.

MEMBER BLEY: Thanks.

MS. BORSH: Seventeen point five, this is

our QA ESBWR description. We identified the QA programs for the ESP application preparation. The program was described in our SSAR in our ESG application, which was Chapter 17.

We identify the fact that our safety-related activities performed prior to the start of construction have been performed under what is labeled DOM-QA-1 for North Anna, and it's the same -- it's the same program that we're using for our existing site.

Then for plant-specific design construction and operation, we're going to be moving over to DOM-QA-2, which is going to be based on -- is based in our COLA on NEI Template 06-14, which is still under NRC review.

CHAIRMAN CORRADINI: Do you know what the template is?

MS. BORSH: It's a QA program. It's a standard generic QA program.

CHAIRMAN CORRADINI: That is still in review by the staff?

MS. BORSH: And it's still in review by the staff.

CHAIRMAN CORRADINI: Okay. Thank you.

MS. BORSH: It's been approved once but went to revision.

CHAIRMAN CORRADINI: Okay. Thank you.

MS. BORSH: Seventeen point six is a new section that we added to the FSAR, and it provides a Maintenance Rule Program description. Here we have adopted the NRC-approved NEI template 07-02A, which is the template that was created for the maintenance rule. Then we also had a supplemental statement that just explained that the Maintenance Rule Program is one of the elements of our reliability assurance activities.

There are two open items in the SER with open items. Both of them are related to this NEI template that's under review by the NRC, and there are no confirmatory items.

MEMBER ABDEL-KHALIK: I have a big-picture question --

MS. BORSH: Sure.

MEMBER ABDEL-KHALIK: -- as to where will all the analyses of record reside.

MS. BORSH: That's a contractual decision that has to be made, but we certainly will have access to those records. You mean like will they be in our vault or will they be in GE's vault? That is a contractual thing that has to be determined, but, as I said, we will definitely have access.

MEMBER ABDEL-KHALIK: Does that have any impact on this process?

MS. BORSH: No.

MEMBER ABDEL-KHALIK: Does this have any impact on how you do oversight or QA?

MS. BORSH: Oh, no, because we have access to GE's records at any time. We've been down and looked at them and audited them. NRC has audited them when they needed to, so there is no problem with having access. We have agreements in place that allow us access to GE's proprietary information.

CONSULTANT WALLIS: They are all in electronic form, are they?

MEMBER ABDEL-KHALIK: Not all of them.

MS. BORSH: Some of them are. I don't know. Are all the records in --

MEMBER ABDEL-KHALIK: Well, they all should be.

MR. WACHOWIAK: For ESBWR, everything except maybe some of the old test program, I think. We had our own electronic system in place when we started this project, so anything new on this project certainly is there, and we've tried to scan most of the old thing in, so it's electronic paper copy, you know, of the stuff.

CONSULTANT WALLIS: Electronic paper? What's that?

MR. WACHOWIAK: It's called a scanned PDF.

CONSULTANT WALLIS: Thank you.

MR. EUDY: Okay. Thank you, Gina. We'll begin discussion of the technical staff evaluation of what was submitted of the outline submitted. We agree with that, and we're going to turn it over to our technical experts. Again, we're talking about Chapter 17, Quality Assurance, and I will turn it over to Aida Rivera.

MS. RIVERA: Good afternoon. My name is Aida Rivera. I am part of the Quality Assurance and Maintenance Branch in new reactors, and I am assigned for the quality assurance sections on Chapter 17. I have with me John Lai, who will be doing the Reliability Assurance Program and Maintenance Rule sections on this chapter.

We decided that based on, you know, the structure of the chapter, we'll cover all the sections on QA first, including 17.5, and then I'll turn it over to John for him to cover reliability and maintenance rule.

Here are the requirements that apply for quality assurance. The staff used the NUREG 0800 for

section 17.5, since that's where the QA ESBWR was discussed, and, you know, as the meeting stated, all these sections before it, 17.1, 17.2, and 17.3 adequately refer to 17.5.

Based on the reference, incorporation by reference of the ESBWR and ESP, Dominion included by reference the QA ESBWR applied by GE for the ESBWR and for, you know, for the scientific certification and the ESP QA ESBWR that was applied during the ESP application.

In addition, they included by reference the QA ESBWR for the operational, the Dominion operational QA ESBWRs for activities that will be conducted prior to construction, and then they submitted in the Appendix 17A(a) the new QA ESBWR that will be applied for the construction and operation phase, and then that program is based on the NEI template 06-14.

In included here a little bit of information about what the NEI template is. This is template of the standard related -- well, that the NEI generated. It's a very general QA program that meets the requirements of Appendix B, and we put some brackets that the applicant will have to provide or fill with specific information.

Revision 4 of this template was approved in April, 2007, and on 2008 NEI submitted a new revision of the template to cover or address some generic items that the staff identified during the review of COL applications. Some of this would include the information discussed in the description on the organizational section of the QAP.

The applicants were not being very detailed on the organization description, so the staff thought that it was a better way to address this in the generic template, rather than going by each of the applicants. Another example is the applicability of the QA reg guides as discussed in Chapter 1, so the NEI template will address how the template is taking the applicability of those QA reg guides.

MEMBER BLEY: Are you folks taking any exceptions to the templates, and are the applicants doing something more than is listed there?

MS. RIVERA: No. At this time, they haven't taken any exception on any of the applicants. They are following the template. It's more as to --

MEMBER BLEY: No, I mean in your -- in NRC staff's approval of your template, did you accept it as-is, or did you say in addition you should do certain --

MS. RIVERA: No, we accepted as-is.

MEMBER BLEY: As-is. Okay.

MS. RIVERA: And then there is some brackets where they would have to provided specific information.

MEMBER BLEY: Yes, specific. Okay.

MS. RIVERA: But, as a whole, it was approved as-is. Next. Okay. At this time, we have two open items. They are related to the organization description. The staff is reviewing the detail information that will be included in the organizational description, and that may result in additional details that will be needed in this section in the QAP from Dominion.

Based on the guidance on the SRP 17.5 that the staff used during the review of the QAPD, the staff concluded that the QAPD provides adequate guidance for the applicant to apply to a program to activities and items that are important to safety. The staff doesn't have any COL activities or post-COL activities related to this area.

Any question in QA? If there isn't, I will send it over to John.

CHAIRMAN CORRADINI: Okay, John, you're up.

MR. LAI: Hey. My name is John Lai. I am

with the DRA branch. We looked at Section 17.4 and Section 17.6. I just wanted to briefly touch the regulation guidance on our RAP program.

If I can read the bulletin from the SECY 95-132, Item 3, that says, "The staff will verify implementation of the DRAP with ITAAC process, as well as inspections and audits during detailed design, procurement, fabrication, construction, and preoperational testing prior to fuel load."

The next bullet says, "Operational phase of RAP will be incorporated into existing programs," so we're touching on that. Of course, there is a Reg Guide 1.206 and SRP Section 17.4.

MEMBER BLEY: Are there separate ITAAC requirements on the ORAP ESBWR?

MR. HAMZEHEE: The answer is no. There is only one ITAAC that has to be met prior to the initial fuel load. After that, then this is the responsibility of the licensee, because it becomes a licensee, to maintain that as part of the operational programs. However, then we have our routine inspections, audits, and those things to ensure that they are on the right track.

MEMBER BLEY: Okay, so that one ITAAC covers essentially everything.

MR. LAI: On this slide, I just want to mention again the RAP applies to the various SSCs in the plant that are identified as risk-significant or significant contributors to plant safety. Also, the applicant will confirm that the report containing the list of risk-significant SSCs has been generated and the reliability of each as-built risk-significant SSC is verified to be consistent with the reliability assumed in the ESBWR design PRA.

MEMBER BLEY: It's verified. That's a certification from them that it's verified, or do you guys verify it?

MR. HAMZEHEE: Well, as part of ITAAC, the applicant or holder is responsible to make sure that everything is checked and confirmed and verified, and the staff would do that in the sampling basis. Now, this may be one of them, but we may not. But to answer your question, that's the sole responsibility of the applicant.

MR. NAKOSKI: This is John Nakoski, Quality Assurance and Vendor Branch Chief. As part of the ITAAC closure process, the applicant or the licensee at that point would submit a letter closing that specific ITAAC subject to staff review.

CONSULTANT KRESS: How do you verify the

reliability of these components, since you'd have to test them over and over and over to failure? Do you use generic data from existing plants?

MR. HAMZEHEE: Well, I think, to answer you question, we're really not focusing on numbers, per se. In other words, we're not going to go and test it and say, "You have to have no more than one failure out of thousand trials."

CONSULTANT KRESS: You're not doing that.

MR. HAMZEHEE: No. What we mean is you have to use risk insights and PRA assumptions, and when achievable or practical, then look at those values that were assigned to PRAs to see if those are the things you want to monitor against your component performance. But it's not solely on quantitative results of PRAs. Does that answer your question?

CONSULTANT KRESS: Yes, that's a good answer.

MR. LAI: Okay. Here's one on post COL activities. It says, "The applicant has committed to implement a process for integrating the RAP for risk-significant SSCs into operational programs such as the Maintenance Rule ESBWRs, surveillance testing, maintenance programs, and QA to meet the objectives of the RAP during plant operation.

So our conclusion is we are still waiting for the ESBWR DC to get satisfied, so we will update this section once we get that. The second point in this slide, the relevant information presented in the COL FSAR is acceptable, and it meets NRC regulatory requirements.

So the Maintenance Rule Program, the regulation and the Reg Guides are as follows. The 10 CFR 52.79(a)(15) and 10 CFR 50.65 requires applicants has the Maintenance Rule Program, and the guidance addressed in NUMARC 93-01 and for 50.65(a)(4) they addressed in Section 11 and also in the rest of Reg Guide 1.182, and, of course, the Reg Guide 1.206 and SRP 17.6 also provide guidance.

The COL action items. It says COL applicant provides a Maintenance Rule Program. There are three supplemental informations. These are very minor changes under NEI 07-02A. This addresses the templates, so when applicant incorporate the templates, they need to change something to adjust to their own programs. Next slide.

The post-COL activities are the same as the RAP program. Basically, it says the RAP program will incorporate SSCs into the operation of programs. Next slide.

CONSULTANT WALLIS: This, I don't know if it's an appropriate comment, but this business about the applicant is committed to implement a process, I'll have to try that on my wife and see what she thinks it means. Then she thinks I've committed to do it. She doesn't have much confidence. I have much more confidence in you folks.

CHAIRMAN CORRADINI: So you're projecting, then.

MR. HICKS: Well, the Maintenance Rule we provide. No comment. No comment.

MR. LAI: Next slide. So we conclude that the information presented in the COL FSAR is acceptable and meets NRC requirements. Any questions?

CHAIRMAN CORRADINI: Okay. Thank you. On to 18? 19?

MS. BORSH: Okay. Chapter 19 is Probabilistic Risk Assessment and Severe Accidents. This slide lists the topics that are covered in the DCD. The last item, the last bullet on here, is a summary of plant-specific PRA review. That's a section that we added to the FSAR. It is not in the DCD. We also added information to the PRA results and insights section of the DCD and the conclusions sections of the DCD.

Section 19.2, PRA results and insights. Here we address a DCD COL item by making a commitment to compare our as-built structure systems and conformance high confidence low probability of failure values to those assumed in the ESBWR seismic legends analysis.

Any deviation from the values or other assumptions in the analysis will be analyzed to see if we have any new vulnerabilities that we've introduced, and we have committed to use a HCLPF value of 1.67 times the SSC for all the structure systems and components that are --

CONSULTANT WALLIS: You're going to make a better assessment of the high confidence, low probability of failure, these SSCs, than was possible at the time that the DCD was prepared? You're somehow going to have some better information? Where does that come from?

CONSULTANT KRESS: Are you in the New Madrid fault area?

CHAIRMAN CORRADINI: Let her answer the first question first.

CONSULTANT KRESS: Well, I figured it was a change in the seismic --

CHAIRMAN CORRADINI: The change in the

spectrum?

CONSULTANT KRESS: Yes, but I'll let them answer it.

CONSULTANT WALLIS: Is that the issue here? It's just a change in the spectrum, or that you know something more about how the SSCs perform?

MR. WACHOWIAK: It's that you know something more about the SSCs. So, for example, right now, tell me what the HCLPF value of a pump is.

CONSULTANT WALLIS: I have no idea.

MR. WACHOWIAK: Right, and since we haven't selected the pump and installed it, neither do we.

CONSULTANT WALLIS: Right.

MR. WACHOWIAK: So, what we've done is we put requirements in the DCD for what these values are, and after we've purchased and installed the equipment, we can then --

CONSULTANT WALLIS: What if it comes more specific? It's not as if you are reevaluating something. It's that you're making an evaluation which now becomes possible.

MR. WACHOWIAK: That's correct.

CONSULTANT WALLIS: Okay.

CHAIRMAN CORRADINI: So this one follows with the explanation you gave Dennis earlier about how

things fit in various categories in the specs that you're going to put on up front to procure --

MEMBER BLEY: And this is specified in the DCD. I mean, that language comes out of the DCD.

MR. WACHOWIAK: Yes. Yes, the values -- these components and values are specified in the DCD, and their activity is after it's installed and confirmed that it actually met what was required in the DCD.

MEMBER BLEY: I've got a question, though. You changed some of the language. You deleted a couple of sentences in one place, moved the HCLPF stuff up there, and then you just referred in Section 19.2-6 back to that. Why did you make that change? It looks like it's identical to what was there to start with. It just seems like you're deviating from the DCD for no reason at all.

MS. BORSH: Let me pull that up and look at that.

MEMBER BLEY: Yes, because the only thing -- you deleted something that didn't get repeated here, and that's the thing that has the HCLPF data of at least 1.67 times the peak ground acceleration, but that shows up in other places, so I just don't know why you -- why you made a change to the DCD to keep

the same language, essentially, unless I'm missing something and you did change the language, but I'd like to know about it.

MS. BORSH: Yes, and it might -- it might be the --

MEMBER BLEY: You changed the "should" to a "will."

MS. BORSH: Yes, see, if it says -- that's what we have to do, unfortunately, because the DCD cannot be -- GE cannot make commitments for us, the applicants, in the DCD. They will make statements like, "The COL holder or the COL applicant will do this thing," and then they -- and the thing is described at the end of the sentence, and then we have to -- and they assign a COL assignment number.

MEMBER BLEY: So that change is just to accomplish the --

MS. BORSH: So all we're doing is --

MEMBER BLEY: Okay.

MS. BORSH: -- making it --

MEMBER BLEY: Right.

MS. BORSH: And I'm not -- maybe Tom will confirm that, and if it's something different, then we'll get back with you.

MEMBER BLEY: Okay. That's all it looks

like to me.

MS. BORSH: Yes.

MEMBER BLEY: Yes. Okay.

MS. BORSH: Okay. All right.

MEMBER BLEY: Keep on going.

MS. BORSH: Okay, 19.5, we provided a conclusion that for us at North Anna, there are no significant changes from the certified design PRA.

CHAIRMAN CORRADINI: So let me ask you a question, then. So did you join the NRC staff with an audit of what the PRA is onsite to confirm that?

MS. BORSH: Well, let's have Rick explain to you how the PRA for the DCD was created, and maybe that will help.

MEMBER BLEY: Well, before you do that, let me read you as the applicant here DCD 19.21 or just a quote from there. "Obviously, some of these attributes are not achievable at the design certification stage in a nuclear plant.

"For example, many aspects of assessing human actions cannot be analyzed in the absence of a physical operating plant and operating staff," and I would say procedures, too. Why haven't you updated that?

MS. BORSH: Because it's still true for us.

That's still a correct statement that we don't have all of those programs in place, and there are aspects that we have not been able to evaluate.

MEMBER BLEY: Is there a point at which that has to be in place? Is that before you start up?

MS. BORSH: Yes.

MEMBER BLEY: So the PRA has to be specialized by that time. You didn't quite acknowledge this here when you talked about why everything is just the same as in the DCD PRA.

MR. WACHOWIAK: I can address those two questions there. The second one is easy. When Part 52 was changed recently, a requirement was added that prior to fuel load they have to do the updated PRA, so it's not listed in DCD because it's already required by law.

MEMBER BLEY: Okay.

MR. WACHOWIAK: Okay, so that part's taken care of there. The first part, we just have to recognize with this that the design -- the level of detail for design certification is the same as the level of detail for a home. They just can fill in the gaps for it like environmental things and other site-specific features, so it's meant to fill in the gaps. So you wouldn't have a more detailed PRA for the

COLA. You just might have more things in it.

What we did is we worked with Dominion and Entergy and Exelon, higher likelihood customers the time we were doing this, and we ensured that the boundary we drew around the standard design would be the -- would make anything from the PRA point of view outside of that boundary irrelevant to the risk insights that we find for this plant.

So, for example, the service water systems are different in plants. In the existing plants, the different service water systems drive differences in risk. Well, in the certified design, we put the boundary on what was actually certified service and what was conceptual service water at a point where changes outside the boundaries will not affect the reliability of the service water system that's used in the PRA.

MEMBER BLEY: Okay, let me ask you about that, because, you know, in 19AA.2, there is a statement that the ESBWR PRA used the following North Anna site-specific PRA information to develop bounding PRA parameters. I guess you almost hit on what this means, but to me that could mean that the DCD PRA actually used North Anna site-specific data, or it could mean that somebody built a qualitative argument

that nothing really unusual exists at North Anna, and is it one of those things?

How did you go at this? The kind of arguments I see in that section are the kind you can make before you look real hard, and when you look real hard, maybe things aren't bounded the way you thought they were without doing some analysis.

MR. WACHOWIAK: It was actually a combination of those two things. We started with the North Anna data, and then we looked at it to make sure this fit the other customer sites, as well.

MEMBER BLEY: Did you have to adapt it, or you just stayed with --

MR. WACHOWIAK: No, we didn't feel the need to adapt anything.

MEMBER BLEY: You said a service water system, and they're all quite different exactly the way they're laid out.

MR. WACHOWIAK: Right.

MEMBER BLEY: Without doing at least a little analysis, how can you argue that this bounds them?

MR. WACHOWIAK: Because the boundary for the certified design on the service water system is the part of the intake for the service water pumps, so

it's the makeup to the basin and the basin that are the site-specific beats.

MEMBER BLEY: Okay.

MR. WACHOWIAK: So now --

MEMBER BLEY: So the service water won't become site-specific until --

MR. WACHOWIAK: But we put into the interface requirements in Tier 1 characteristics of the basin such that if you don't take an exemption to Tier 1, then nothing you do to that makeup system can change or result in a PRA. You always have enough water there to use the certified pump design service water system and be able to --

MEMBER BLEY: So if we're going to be comfortable, we need to look at that.

MR. HAMZEHEE: And let me just add something for a couple of minutes, and that will provide some perspective. I think the staff's expectation with respect to PRA is as follows.

We have the DCD phase of the PRA. Then we have COL application phase of the PRA.

MEMBER BLEY: Which doesn't -- in this case it's the same.

MR. HAMZEHEE: Yes, and I'll explain, yes, and then we have COL holder phase of the PRA, and then

operational phase of the PRA. The first one is DCD that we are going to get into more detail. The staff has performed audits, and then when we get with you again, we'll tell you what we found and where we are.

MEMBER BLEY: You have done those audits?

MR. HAMZEHEE: Yes, we have already completed that, and, actually, we are about to issue the audit report, and we would be more than happy to share that with you.

And then the COL application phase, which, based on what we have observed lately, is very close to DCD, because with respect to design they still don't know a lot more than what the DCD knows, and the focus here is to look at all the design departures and site-specific features to make sure based on the information they have today they have appropriately evaluated those design features and site-specific features and incorporated them into their PRA. So that's the expectation of the staff to make sure that has been done appropriately before we write the SER.

And then, when they become the holder, prior to the initial fuel load, as Rick mentioned, there is a Part 52 requirement that says, "You shall perform Level 1, Level 2, all loads for those that the consensus standard endorsed by NRC exists one year

prior to the initial fuel load."

So, in other words, if all these ANS, ASME standards for PRAs are all completed one year prior to North Anna's start of the plan, then by Part 52 rule they have to go back and make sure whatever was done, they have to go back and operate and comply with Part 52 rule. So that's the COL holder phase of the PRA.

MEMBER BLEY: That still allows a seismic margin study, right, and a PRM, or it doesn't?

MR. HAMZEHEE: Well, however, if the seismic PRM methodology is completed and the standard is there, they may have to perform seismic PRA.

MEMBER BLEY: Okay.

MR. HAMZEHEE: And then, once they get the license and then the operational phase, the rule also specifies that at some period they have to every few years upgrade if the new state of knowledge is available, better tools are available, and regardless of those every few years, because they have more operating experience, more data. They have to update their PRAs, and that has to be done over the life of the plant. So, right now you're in that second phase.

MEMBER BLEY: Okay.

CHAIRMAN CORRADINI: Okay. Did we get yours in?

MEMBER BLEY: Yes, we did.

CONSULTANT WALLIS: I didn't quite understand the service order required. Maybe I got it wrong. I got the impression that you were saying that GEH defined the service order design from the intake to the -- I mean, the pipes and the pumps and the elevations and everything are all specified by GEH? The elevation isn't site-specific? The elevation differences and things aren't?

CHAIRMAN CORRADINI: I think what he's saying is he's going to specify the NPSA shall specify all the required conditions.

CONSULTANT WALLIS: But there will be different pipes and different pumps and all that, and whether or not they -- how well they meet these requirements may be different from site to site, how reliable they are, and all sorts of things.

MR. WACHOWIAK: The pumps are in the DRAP program, so the reliability of the pump is going to be looked at and made consistent.

CONSULTANT WALLIS: It's going to be looked at, but it's going to be different from site to site.

MR. WACHOWIAK: Not enough difference to make -- what we've found is that the major differences were where you had to pump out of a river or a lake

versus you had something sitting in a basin or if there was some gravity, natural way of getting the water to the suction of the pump. Those are the major differences and the number of pumps.

CONSULTANT WALLIS: Well, if you're drawing from a lake, then you have to worry about debris screens and all kinds of -- is that part of it, too?

MR. WACHOWIAK: No, because we specified that the pumps need to suck from a basin, which is essentially the credit amount of lake that is wanted in the PRA, so they have to have a basin that size, and if it's bigger, that's fine. It's still just as reliable as what we have in the PRA.

CONSULTANT WALLIS: But things like the ice in the winter and all that aren't specific?

MR. WACHOWIAK: That is the interface requirement that's there, so you have to have a certain amount of water that can be drawn for some number of days, and it has to account for chemical effects and re-effects, NPSH. The things that you were just talking about are required to be related to that basin.

So, if you have -- so if we have enough water in the basin, no matter how they put their makeup system, whether they have a pump from a lake

that goes to the streams or whether they have a waterfall coming from a mountain or whether they have an ocean pouring right into it, it still makes the service water system that's in the PRA the same --

CONSULTANT WALLIS: But the seasonal temperature variations and all that are very site-specific, and they must have some effect, surely.

MR. WACHOWIAK: They do not have enough effect on a design PRA.

CONSULTANT WALLIS: Doesn't it? I'm trying to think about Vermont Yankee. We had a big problem with seasonal temperature variations at service points.

MEMBER BLEY: This basin seems -- I think the basin is the key.

CONSULTANT WALLIS: It has to be of a certain type.

MR. WACHOWIAK: A certain size, a certain size.

CONSULTANT WALLIS: That really restricts your sites, doesn't it?

MR. WACHOWIAK: No.

CONSULTANT WALLIS: No?

MEMBER BLEY: Or your protective measures.

MR. HAMZEHEE: I think to some degree

you're right. The impact on the PRA is going to take place when you get operational data. For instance, if you have a harsh environment, cold weather, that could impact the reliability operation of the service water, so when you collect data, your data in New Hampshire may be different than some data you may get elsewhere if there are some weather-related impact or some temperature type impact.

MEMBER BLEY: The ice problems, you'd better be looking at that ahead of time.

CONSULTANT WALLIS: Fragile ice at the in level.

MEMBER BLEY: You don't want to learn that by experience again.

MR. WACHOWIAK: At the design phase, whether it's what we have in the COL or whether it's something else, it would be the same PRA that we generate from that, as long as you have the water in standby there that you need to meet what is defined in the quality of the PRA.

MEMBER BLEY: So it's kind of unique looking, at least unique to me, cooling tower arrangement is outside of this.

MR. WACHOWIAK: Outside the box.

MEMBER BLEY: That's providing the basin.

MR. WACHOWIAK: No.

MEMBER BLEY: No?

(Simultaneous speakers.)

MR. HICKS: There's a separate cooling tower and basin for the service water.

MEMBER BLEY: Oh, there is? Okay, but, again, that's outside of the basin.

MR. HICKS: Outside. That's correct.

MEMBER BLEY: The basin defined by the DCD.

MR. WACHOWIAK: Yes. I think Dominion may have a cross-connect there to use that basin as a refill for the site. They will consider that, but once again, it doesn't matter how you refill it, because you have as much water as is credited in the PRA there.

MEMBER BLEY: And that's somewhat guaranteed against fragile ice?

MR. WACHOWIAK: Correct.

CONSULTANT WALLIS: So could you build it by the sea and use the sea as your -- you couldn't?

MR. WACHOWIAK: The interface allows you to use any body of water that is there in standby, ready to go.

CONSULTANT WALLIS: But the way that the sea water behaves is going to be different from the

fresh water, so there are some things that are -- well, there must be some site-specific stuff.

MEMBER ABDEL-KHALIK: How about the cable flooding? Isn't that site-specific?

MR. WACHOWIAK: Cable flooding. The site parameters that we specify for ESBWR assumes a flooding level in North Anna's site meets what we assume for the flooding levels if below what we've assumed, and we also find that flooding is not necessarily a large risk contributor, either.

We compared their site-specific flood parameters with what we assumed in the PRA, and it's not going to make any change to the insights in what we currently have.

MEMBER BLEY: Have you preferred the Tier 1 document as-is? I don't think we saw a Tier 1 document.

MS. BORSH: Yes.

CHAIRMAN CORRADINI: Yes, we do.

MEMBER BLEY: It's there?

CHAIRMAN CORRADINI: It's in their COLA, as well as in the verified DCD.

MEMBER BLEY: Well, I've got it in the verified DCD.

CHAIRMAN CORRADINI: It's in the COLA.

MEMBER BLEY: It's in there?

CHAIRMAN CORRADINI: Yes.

MEMBER BLEY: Okay. It's in there. Anyway, it doesn't matter if you've adopted it as-is. All of these things we're talking about are --

MR. WACHOWIAK: And so we're working with North -- with Dominion. We deliberately put the box around the design such that if they did not take any departures from the things found in the PRA, then they would not need to have a site-specific Tier 1 construction by design.

CHAIRMAN CORRADINI: Go ahead.

MEMBER ABDEL-KHALIK: What is the cable flooding experience at North Anna? Do you have any pull boxes out, a lot of pull boxes where cables may be submerged?

MS. BORSH: John, I hate to put you on the spot. John is here for Chapter 8, and would you like to talk about that, John?

MR. DISOSWAY: I'll talk a little bit about it.

CHAIRMAN CORRADINI: Identify yourself, please.

MR. DISOSWAY: John Disosway with Dominion. We have not had significant problems with cable

flooding, as you say, at North Anna. We have a few manholes a North Anna, and I'm speaking right now of safety-related. We have a number of non-safety related manholes. We do have manhole flooding, so we have had water to pump out of the manholes periodically, but as far as flooding into a building and causing damage, that's not --

MEMBER ABDEL-KHALIK: Yes, but the pull boxes are what you call manholes.

MR. DISOSWAY: Well, manholes being box that you can get down into, so we have had water in the manholes, a significant amount from time to time that we've had to pump out and take care of. We've had only two or three cable failures that can be attributed to water in the duct banks over the life of the plant that I can recall at this time, generally medium voltage cable.

MEMBER ABDEL-KHALIK: And you don't think these cable failures would contribute to the reliability numbers or failure rates that you have in the PRA?

MR. WACHOWIAK: I don't think it would significantly alter the values that we've used in the PRA, because they were based on generic data from sites that also have the same kind of flooding issues.

So the values that we picked from the operating fleet take those transit things into account.

So what we looked at was would it be extraordinary, and it wasn't, so the data set that we picked doesn't validate the data set. There is nothing extraordinary at their site that would change the generic data that we used in the design PRA.

MS. BORSH: So basically the last couple of slides we have cover at a very high level what we've been discussing in detail here, and the appendix summarizes the plant-specific review that GE did for us. Chapter 19 has no open items, no confirmatory items for the SER. With that, NRC.

MR. KEVERN: Okay. Thank you, Gina. We discussed previous factors for staff review of Chapter 19 FSAR. We agreed that the content of Chapter 19 is accurate, and we will not talk about content. We'll talk about the staff's evaluation instead.

MR. CARUSO: Good afternoon, gentlemen, ladies and gentlemen. I'm Mark Caruso from the PRA staff, Tom Kevern, PBM. The Chapter PM is over there. The interim staff looked at this particular evaluation with myself. Edward Fuller here is going to talk about the severe accident review. John Lai is here with him for the external events review and also

is here to work on the severe accident review, and Jim Xu is here, who is our structural and seismic expert on the seismic margins issues.

Slide 3, as Tom said, we agree with the description in the information content of the application. Slide 4 is a summary of the pertinent regulations and review guidance that was used. We reviewed basically -- they're required to do a PRA plant-specific PRA. That's 10 CFR 50.34(f). 52.79 requires them to describe the PRA to us.

Probably most important is, as Rick was saying, basically the regulation says they need to start with the design-specific PRA and then update it to reflect plant-specific, and, as Rick said, I think, you know, it's going to be at that point in time where we really look at the plant-specific PRA.

I think at this point in time it's pretty clear to everybody that they've really used the design certification PRA and done some work to convince themselves and us that there isn't anything weird about North Anna that's going to make you question the applicability of inclusion in the design certification PRA to North Anna.

CONSULTANT WALLIS: It may not be weird, but it might be different.

MR. CARUSO: Well, poor choice of words. I meant different.

MR. CARUSO: Of course, the guidance here is our SRP guidance in Chapter 19 and our Regulatory Guide 1.206 and the interim staff guidance that was put together for Chapter 19. We didn't have to consult that all that much, since basically the bulk of this application is incorporated by reference.

MEMBER BLEY: Just a question we've been talking about. How did you convince yourselves that the service water basin here fits within the scope of what was defined in the Tier 1 document?

MR. CARUSO: Well, we looked at what they had described as the interface and the description of the, you know, water design and the area for it. We didn't get into all the details of whether or not there was going to be ice or all these things.

We were really looking to see if there's something weird, something really different, that would make you say, "Wait a minute. This doesn't compute as far as these conclusions," you know, and we could get into this.

Basically, with all of the plant specifications, we were looking to see what were the parameters and features of the plant that were

different. We asked them what they were, as well as going through the rest of the COL application to make sure that there were no departures, to make sure the specs were the same, and, you know, I guess, frankly, we didn't really dig in.

We didn't do an in-depth, you know, back-and-forth REIs and how big is the basin, and, you know, when am I going to get ice, and what's the temperature of the water in the summer, and what's the temperature of the water in winter. Those things are going to get looked at when they really do a PRA for that plant and put the stuff in there.

MR. WACHOWIAK: Mark, I believe your water systems guys did do that, dig into the service water.

MR. CARUSO: I'm sure they did it. As far as the way it's treated in the PRA, you know, you know, reliabilities. Are they within the range of what you would expect for this plant, and where did they come from? Could you expect that they would, you know, be applicable? That was the level.

CONSULTANT WALLIS: I had the same sort of question, and your statement up here says the application stated. Well, that's simply an assertion. That doesn't apply to -- it doesn't use evidence or something, and you used the word described in your

later elaboration of what that meant.

I would expect to see some kind of demonstration by analysis or some kind of quantitative measure, rather than just stating and describing. Maybe it looks okay, but I'd like some measure that it is okay. That's what I'm looking for.

MR. CARUSO: Well, that's what 19AA was about. They did -- they did make mistakes.

CONSULTANT WALLIS: Well, how come the GEH generic --

MR. CARUSO: We said, "Wait a minute. One statement that says you envelope it, that's not quite enough."

CONSULTANT WALLIS: Right.

MR. CARUSO: You need to tell us what were the parameters.

CONSULTANT WALLIS: Okay.

MR. CARUSO: And how did you do it?

CONSULTANT WALLIS: So you look at that.

MR. CARUSO: Yes.

CONSULTANT WALLIS: I mean, if the envelope says, you know, five million acre-feet or something, you look for ten million-acre feet. Do you do that kind of thing?

MR. CARUSO: No, they --

CONSULTANT WALLIS: Do you look for that? Do you look for that?

MR. CARUSO: Yes.

CONSULTANT WALLIS: You get down to the -- I don't get the impression that you did. That's why I'm asking. You did?

MR. CARUSO: Well, I can tell you what we did. We asked them what they did and how they did it. They didn't come back with nine million pages of analysis, but they did come back and tell us what the, for example, what the loss of offsite power frequencies were for North Anna, and they compared those, and we looked and compared those to what they assumed.

CONSULTANT WALLIS: Okay, you can do that. So you had some numerical comparisons.

MR. CARUSO: Yes.

CONSULTANT WALLIS: That's good. That's helping me, because I haven't yet heard of anything specific as a measure yet, and that's good. What did you do about the service water, then? What did you use as measures for that?

MR. HAMZEHEE: Mark, let me just add something here. Remember, right now we're here to talk about Chapter 19 PRA. A lot of these specific

questions that you asked and the design information that we need are handled by other technical branches.

For instance, more detailed information and questioning as part of the service water should be done and has been done with our balance of plan branches. Here, when we do the PRA, and what we did was to see if their design or their intended design for service water is different from what ESBWR has put in the DCD and whether those differences are going to impact the modeling in the PRA.

MEMBER BLEY: But Chapter 19 makes the statement that there is -- we've looked. The applicant has looked, and there is nothing about our service water arrangement, and the only thing that's new is the stuff that feeds this basin that Rick's talking about. There is nothing there that would mean that the DCD analysis wouldn't bound us.

So if you looked at just Chapter 19, you would have said, I would have thought, "Gee, there are these site-specific differences. Let's see if there is anything there that's beyond what they told us, like does that meet the requirements that are the basis for the PRA?"

MR. HAMZEHEE: That's right.

MEMBER BLEY: Now you're telling me, no,

you wouldn't look at that. Somebody else would.

MR. HAMZEHEE: No, I'm saying the detail of the design and how it varies are done by other technical branches. In the PRA, we look at those to see if anything that would change the modeling of the service water that could impact the PRA results. That's what I'm saying.

MEMBER BLEY: You were able to look at what other people said about this basin, and they fell within the bounds of --

MR. HAMZEHEE: Well, I'm going to let Mark tell you how much of that he had incorporated into his evaluation.

MEMBER BLEY: It doesn't sound like any on this issue.

CONSULTANT WALLIS: Well, where do you get your numbers from if it's somebody else's job? You've got to put some numbers into this PRA.

CHAIRMAN CORRADINI: Well, I don't think it's their -- I don't -- I guess I'm going to jump in. I think you're expecting them to do a reanalysis, and that's not the point here.

CONSULTANT WALLIS: I know. I know. They're saying that it's all within the envelope of the ESBWR, and I just say, well, the only way to know

it's within that envelope is to compare some measures, and I'd like to sort of know what those measures are, rather than this sort of vague statement that it looks the same or it looks within, looks as if there is nothing different or something. That's all.

MR. CARUSO: Well, service water, it's the loss of service water frequency. We expect it to be substantially different at North Anna, and that's the measure. I think it was primarily judgment. I didn't do any of that for you.

CONSULTANT WALLIS: Okay. So it's a judgment thing. It has to -- it's okay as a judgment thing, because it's not that significant in the PRA? Is that why it's okay as a judgment thing?

MR. CARUSO: Well, I think it's okay because at this stage you're really interested in -- they haven't really given you site-specific PRA.

CONSULTANT WALLIS: Right.

MR. CARUSO: And you're really interesting in knowing is there something specific about this plant that would make you think that inclusions of the design PRA, if there are some risks that you haven't picked up about this plant. You've looked at this design PRA and said, "Okay, we're happy with this. We're happy with this. We think they've, you know,

reached the safety goals."

You've looked at the vulnerabilities, and now you're saying, "Wait a minute. There's something -- there's something different about North Anna that would make me think that if I actually did this PRA, I may not get the same conclusions, or I might have some substantial vulnerabilities, some substantial risk." That's the stage we're at in licensing, and that's the way the regulations have been set up.

CONSULTANT WALLIS: I understand. It's a sort of preliminary look from 20,000 feet or something saying, "Things look all right as far as I can tell, from what I know now," but when they actually get down to doing site-specific PRA and they know what they've got, they might find something.

MR. CARUSO: You know, I agree with you. We needed to know that, you know, Rick and his team, you know, and North Anna, they actually looked at some parameters.

CONSULTANT WALLIS: Yes, I understand that. I understand that.

MR. CARUSO: They looked at frequencies and what did they do.

CONSULTANT WALLIS: And as far as I can tell at this stage, there isn't anything that's

significantly different. They decided something won't be discovered when you do a really hard-nosed, real PRA.

MR. CARUSO: Right, and, of course, you have -- you know, you also need to recognize that the PRA is a living, breathing entity.

CONSULTANT WALLIS: I hope so. I hope so.

MR. CARUSO: And when the temperature of the melt in the heat sink changes or the wintertime comes and you should be chaining reliabilities for service water, they should be doing that. In fact, they're required to do that.

CONSULTANT WALLIS: So the structure of the PRA is going to be the same, but the impacts will be different. You're checking the structure of the PRA on the specific inputs. Is that right?

MR. CARUSO: Yes.

CONSULTANT WALLIS: Okay.

MR. CARUSO: If it's telling us that, you know, we're not going to use water for a service water system, it's a service liquid metal system because it's --

(Simultaneous speakers.)

MR. CARUSO: We could have said, "Well, okay."

CONSULTANT WALLIS: So this magma, the magma source -- I don't know where you get your liquid metal from. No, I understand. I think I understand.

MEMBER ABDEL-KHALIK: Does the presence of the other two units have any impact on this?

MR. CARUSO: Well, one of the questions we asked them was, "Tell us about any shared systems."

MEMBER ABDEL-KHALIK: Right.

MR. CARUSO: "Are you planning on sharing any systems between the existing units?"

MEMBER ABDEL-KHALIK: And the answer to that was no?

MR. CARUSO: No. We also asked about would there be any difference in the way shutdowns and refuelings are done, shutdown procedures, because there was very little. I mean, they did a shutdown PRA, but we were interested in, you know, how you would go about explaining -- because that would have affected the shutdown PRA that was done. We said, "Well, wait a minute," you know.

They made some assumptions about, you know, what the states would be, the time slices for shutdown, what the assumptions would be, very typical for current plants running. There was something about this plant that, you know, could it happen somewhat

differently? And I think the answer was no, it would be the same.

You know, I don't think we really got a lot of detail. I think, you know, the fact that there are actually units there, and you can expect that to a certain degree, but the fact is this is a very different unit than the other North Anna units. I think that's one area that we wanted to look into.

So, let's see. So that covered, I guess, basically Section 19.1 and basically the Level 1 analysis. Ed Fuller is here to talk about Section 19.2 and the severe accident issue.

MR. FULLER: The severe accident evaluation portion was incorporated by reference to the ESBWR severe accident evaluation with no departures, so that's easy. One of the things that we want to be sure of, though, is that the accident management procedures that get developed in the process of going from approved design certification to approved COL is that their accident management technical basis that is established, is being established by GEH, finds its way into the development of these procedures. The procedures themselves or the process of developing the procedures is described in Chapter 18, and we just want to make sure that the meat is put on the bones

during the process of developing these.

So there is an open item which is in the ESBWR design certification that will soon be closed, I believe, that specifically, as it's being closed, will specifically explain how the technical basis is going to be included, and GEH is, if they haven't already, modifying an ITAAC, a Tier 1 ITAAC, that's associated with human factors engineering, or Chapter 18 in Tier 2, to assure that this technical basis will be incorporated.

Once this is done, depending on how it's done, we expect that North Anna won't have to do any more, but it's still theoretically possible that we may have more questions. So we don't call it officially closed yet, even though it's close to being closed.

The same sort of process we would like to see taken in terms of the training implementation plan for accident management. There are two topical reports that GE included as part of their Chapter 18 submittal for the ESBWR DCD, one for procedures, one for training, and those basically lay out how these are supposed to be done.

In terms of the technical basis itself, we've made great progress talking to GE over the last

couple of months, and we know how they intend to suggest for the BWR owners group how these severe accident guidelines for containment flooding is expected to be changed to accommodate a different design in the lower drywall relative to below the vessels and the other BWR designs, and from what we've seen so far, we're happy with it.

CHAIRMAN CORRADINI: All that you've described, was it helpful as related to the DCD? I want to make sure I'm clear about that.

MR. FULLER: Yes, that's correct, but what we're trying to emphasize here is that if the development from the DCD taking the step to the procedure development is done properly, that we feel that there is a really good chance that the accident management procedures that are put in place will be acceptable.

CHAIRMAN CORRADINI: Okay.

MR. FULLER: Okay. Let's see. I'm going to turn this back to Mark for wrap-up.

MR. CARUSO: Go to Slide 9. At this point in time, you know, we've concluded in our SER that this has been addressed adequately. A lot of this is based on the ESBWR DCD, which we're still reviewing, so we are withholding our ultimate judgment until the

implementation and review of the ESBWR DCD.

MR. HAMZEHEE: Mark, you skipped that information item on HCLPF.

MR. CARUSO: I thought we talked about that.

MR. HAMZEHEE: No one covered that, so you --

CHAIRMAN CORRADINI: You covered it earlier, but I don't think you concluded it. I want to make sure I understand.

MEMBER BLEY: So this is basically saying it's bounded, will be bounded. Excuse me.

MR. CARUSO: We're satisfied with the COLA and if they need something, you know, we will buy them equipment, with what was assumed, and if they are not bounded, they'll address that. If they are bounded, then the conclusion that's been made in the DCD ESBWR --

CONSULTANT WALLIS: How accurately can you determine these?

MEMBER BLEY: Two decimal points. I can't answer that.

MR. HAMZEHEE: This is one of those interactions with Division of Engineering and one gentleman that is in charge. Unfortunately, he is not

here to give you more background on this, so we can tell as much as we know. It may not be enough. Let us know if there are some specific questions. Tom and I can take them back and get the answer from GE.

MR. KEVERN: I would just point out in the process the fact that this is classic example of a standard structure that is here. On most COL activity, the applicant has made a commitment to do this, clearly not something that is going to be done prior to issuance of the COL and subsequent to it.

Regardless of how many decimal points you could get it to, this is something that is committed to now and then is accomplished later, at a later time, and the staff would review that at a later time.

CONSULTANT WALLIS: This 1.67 looks fairly accurate, but your -- essentially, if it gets very close, then you start asking questions or something. Usually, it's off by a factor of 100 or something, so it's okay.

CHAIRMAN CORRADINI: So, this is a point where we want to either take a break or launch into the last chapter. Let's go for it.

MS. BORSH: Let's talk about Chapter 8, Electric Power. The chapter is divided into four parts. We have an introduction, offsite power

systems, onsite power systems, miscellaneous electrical systems. We added information to each of these DCD sections.

The introduction, Section 8.1, we provided an overview of the utility power grid, including the switch yards, the transformers, and the transmission lines. More detail is provided in Sections 8.2 and 8.3 of the FSAR. In Section 8.2, we described the offsite power system, which happens to be non-safety related.

The FSAR describes the outside transmission system, and we put in the transmission lines and the arrangement of the switchyard. We also provide a map of the transmission system. Then we go on to describe the normal and alternate preferred power sources and the equipment in the circuits.

MEMBER ABDEL-KHALIK: Where will the low voltage switchyard for this plant be located relative to the other two units?

MS. BORSH: It's the same, right, John?

MR. DISOSWAY: It's --

MS. BORSH: This is John Disosway.

MR. DISOSWAY: This is for Dominion. Are you speaking of the intermediate switchyards?

MEMBER ABDEL-KHALIK: Right.

MR. DISOSWAY: The intermediate switchyard is located to the north and just to the west of Unit 3, which would place it between the existing switchyard onsite and the intake structure for Units 1 and 2.

MEMBER ABDEL-KHALIK: Okay. Thank you.

MR. DISOSWAY: Yes.

MS. BORSH: All right. Section 8.2, we continue on. There is a COL item that we address by describing the switchyard, including the equipment design criteria that we use and the capacities and the ratings of the equipment.

For another COL item, we address AC/DC station service. We explain that it is provided in the switchyard, and we also describe the switchyard transformer protection equipment and the criteria for that equipment to respond to the COL item.

Section 8.2 --

CONSULTANT WALLIS: This includes fire suppression and that sort of thing? Does it? Fire is a part of this?

MR. DISOSWAY: Fire suppression is not discussed.

CHAIRMAN CORRADINI: What are you asking, Graham? I'm not sure. It's not discussed in this

section. That's in Section 9.

CONSULTANT WALLIS: It's in a different section? The issue of fire is in Section 9, then. Okay.

MR. HICKS: There is no description of fire protection system.

CHAIRMAN CORRADINI: The fire protection system is in Section 9. Is that what you're asking?

CONSULTANT WALLIS: That's what I was asking.

CHAIRMAN CORRADINI: Okay.

MS. BORSH: All right. Then we go on. In Section 8.2 we discuss -- no, no, no. We talk more about the protective relaying, because it's such a fascinating topic, and then we go on and explain about how we coordinate our activities with PJM, that PJM is our regional transmission organization, and we talk about the study that PJM did, the interconnection study for Unit 3.

The conclusion that PJM reached for adding North Anna Unit 3 to the system was that we did not have -- according to PJM, they didn't recommend any additional design requirements above the ones that we typically use for protective relaying schemes in the switchyard, so we're following what we do currently.

Then we added some supplemental --

MEMBER BLEY: So the way that's put together -- you say what you're doing currently -- is as you've gotten the switchyard for Units 1 and 2, this switchyard is designed essentially like those were.

MS. BORSH: Yes.

MR. DISOSWAY: The methodology that's used for protective relaying for Unit 3 does not deviate from the methodology that we're using in the existing units and in the electric transmission system, Yes, it's adequate.

MEMBER BLEY: You'd argue in the PRA that you looked at the offsite power connection data for Units 1 and 2 as well as everything else, so this is saying this won't be any different, at least on the protective side of things. Okay.

CONSULTANT WALLIS: So your effect on the grid is calculated by these people. When you put a new power station on the grid, you change the dynamics of the grid. It has to have enough capacity and all that stuff. That's someone else's responsibility?

Although it does affect you, because if you increase your offsite power loss because of stability changes, then obviously that affects you.

Whose responsibility is that? Is that just these guys' responsibility?

MS. BORSH: To perform the study?

CONSULTANT WALLIS: Yes, of what's your effect on the grid.

MR. DISOSWAY: Well, ultimately, it is our responsibility to see that the study is performed and that we can interconnect properly with the grid.

CONSULTANT WALLIS: Right.

MR. DISOSWAY: That is our responsibility, so that's what we do.

CONSULTANT WALLIS: You have to be satisfied that you're not going to do some perturbing of that grid, which is going to reflect back onto your own safety.

MR. DISOSWAY: Exactly, and the methodology used is that we provide the data to the RTO. They perform the study and return the results to us, so we are in the process with them to make sure that there is no difficulty with the grid.

CONSULTANT WALLIS: And they can come back and say there is no effect on offsite power losses and so on?

MR. DISOSWAY: What they have done in this case is they looked at grid stability. They looked at

short circuit capability, and they looked at load flow, and they came back and said that there would be certain modifications that Dominion would have to do to the grid in the area in order to satisfactorily interconnect and not cause difficulty to the grid by operation of Unit 3, so that's a series of items that we have to do.

MS. BORSH: That's actually on the next slide, too, the assigned stuff. Before we get to that, we have a section in Section 8.2 that describes our inspection and testing activities for the transmission lines and the switchyard. Then on slide 7, this is the study that John was just talking about that PJM performed for us about grid stability.

Going on with Section 8.2, we describe the switchyard interface agreement and protocols for maintenance communications, switchyard controls, and system analysis that have been established to safely operate and maintain the power station interconnection to the transmission system.

MEMBER ABDEL-KHALIK: Who else has access to your switchyards?

MS. BORSH: Access?

MEMBER ABDEL-KHALIK: Right. When you talk about interface agreement, who has access to your

switchyards other than Dominion?

MEMBER BLEY: Or control of any breakers in the switchyard?

MEMBER ABDEL-KHALIK: Right.

MR. DISOSWAY: It's Dominion.

MEMBER ABDEL-KHALIK: Just --

MR. DISOSWAY: Yes.

MEMBER ABDEL-KHALIK: They have full control over your switchyards?

MR. DISOSWAY: Yes.

MEMBER ABDEL-KHALIK: Okay.

CONSULTANT WALLIS: But you don't have control of what it connects to.

MS. BORSH: Finally, for Section 8.2 we provided failures modes and effects analyses for the transmission system, the switchyard, and the intermediate switchyard, and the results of those analyses concluded that no single failures -- there are no single failures that can prevent the North Anna offsite power system from performing its function to provide power to Unit 3.

Now we move on to Section 8.3, which is onsite power systems. Here we added supplemental information to describe the intermediate switchyard --

CONSULTANT WALLIS: Wait a minute. You

said the conclusion was providing power to Unit 3 from the outside you're worried about.

MS. BORSH: I'm sorry.

CONSULTANT WALLIS: You said there was no problem with supplying of power to Unit 3?

MS. BORSH: Yes, correct.

CONSULTANT WALLIS: There is also no problem when Unit supplies power going out, presumably.

MS. BORSH: Well, as John had explained earlier, you know, we'll have to make certain modifications.

CONSULTANT WALLIS: But there is no problem.

MS. BORSH: Correct.

CONSULTANT WALLIS: Okay.

MS. BORSH: We're good to go with Unit 3. Okay. All right. So back to Section 8.3 about onsite power, we added some supplemental information to describe the intermediate switchyard, which transitions the offsite power system from the North Anna switchyard to the Unit 3 main power transformers and the unit auxiliary transformers. Then we added some additional information to describe the training and procedures that we're going to be implementing to

mitigate station blackout.

Appendix 8A is miscellaneous electrical systems in the DCD and in the COLA, and here in the COLA we explain that we will have a cathodic protection system, and the design is going to be in accordance with the National Association of Corrosion Engineers standards. There are no open items in the SER, no confirmatory items in the SER, and, viola, that is my last slide, and we'll move on to NRC's presentation.

MR. EUDY: NRC will begin our presentation on the electrical power, Chapter 8. I will be begin with an outline that is the information in the application. With this one, we've saved the best for last. It is the antithesis of Chapter 7. It is entirely IBR, and this one has quite a bit of site-specific information that's been included. I'll turn it over to our expert, Mark Pal from our electrical engineering branch.

MR. PAL: My name is Amar Pal. I am the GE ED. I am the lead reviewer of this chapter. The FSAR Chapter 8 incorporates by reference ESBWR DCD Chapter 8, but they are required to submit supplemental information plus additional supplemental information. I am not going to go through those again, but you

have the other rules.

The reviewed regulations and review guidance which we used, GDCs 5, 17, and 18, 10 CFR 50.63 and 50.65, SRP Sections 8.1, 8.2, 8.3.1, 8.3.2, and 8.4, Reg Guides 1.32, 1.118, 1.206, 1.160, and 1.182, and other guidance, BTP 8-3 and 8-6.

We included a diagram to show what is the scope of North Anna versus the DCD. This picture shows an external view of the utility transformers and other utility transformers by means of the one cable.

We have used another cable. We just need to find out the water treating effect on the insulation degradation of these cables, so we have several RAIs on that. The applicant said that that will be used metal sheet cable, and they are going to inspect the water accumulation every six months.

MEMBER BLEY: What part's underground, just coming to the UATs and RAIs?

MR. PAL: This cable over here and this --

MEMBER BLEY: It's all underground?

MR. PAL: It would be underground.

MEMBER BLEY: Okay.

MEMBER ABDEL-KHALIK: And you have determined that the six-month inspection frequency is appropriate?

MR. PAL: And we have a requirement also that if they find water, they're going to increase the frequency. If the inspection determines that the water, excessive water is found, then they have the corrective action which will make them to do frequent inspection.

MEMBER ABDEL-KHALIK: But for the time being --

MR. PAL: Six months.

MEMBER ABDEL-KHALIK: -- you have ruled that the six-month initial inspection frequency is appropriate. And what is the basis of that?

MR. PAL: This is the licensed space. We have determined that six months is the general time unless they have a severe water problem.

MEMBER ABDEL-KHALIK: And they do not?

MR. PAL: That's what they said. Additionally, we were interested -- since the switchyard is shared between existing two units, we are interested to know if the GDC 5 priority can be reached or not. The applicant said that GDC 5 is not applicable for their plant, for the site.

However, we determined that since the UATs and RATs, which supplies all of the auxiliary power for the plants, are not shared between the units, and

the separated loads, which is the EPS load and the charger is very minimal compared to the large size of the offsite power system, so based on that we determined that they are making GDC 5.

Another point of interest, we were interested to know whether the plant procedure will address -- well, they actually came out with that the training and procedures will be there for the station blackout event, and we wanted to know if the procedure incorporate all the necessary procedures for a station blackout guidance, the AC power restoration procedure, and to see whether there is a procedure, which is mentioned in the Yuma 5700, which is endorsed by the Reg Guide 1.1.55.

MEMBER BLEY: I didn't quite understand what you did about those procedures.

MR. PAL: Three procedures.

MEMBER BLEY: Are those written now?

MR. PAL: No, the procedures have not --

MEMBER BLEY: You've just committed to look at them.

MR. PAL: They will have all three procedures.

MEMBER BLEY: Okay.

MR. PAL: And the training specific to the

procedures.

MEMBER ABDEL-KHALIK: Back to the inspection frequency of the underground cables, what is the current inspection frequency of the cable vaults?

MR. DISOSWAY: I don't have that number right off the top of my head exactly how often we do it. It's, I believe, no more than annually. It may be as short as six months, but I don't have the exact number right off the top of my head. It is a standard station procedure that the maintenance department goes out and inspects for water. When they find water, they pump it down, and we trend it, and we adjust frequencies, but at this time I can't tell you the exact frequency right off the top of my head.

MR. JENKINS: Ronaldo Jenkins, electrical engineering branch. In the operating reactor space, there was a generic letter. I believe it was 2007, and that generic letter asked the licensees to submit data, failure data associated with cables that were inaccessible subject to water intrusion immersion, and NRR is in the process of evaluating that, and they are also taking actions in terms of reactor oversight such that they're going to look at a certain number of manholes for water intrusion.

And the frequency that Amar Pal was talking about was developed in conjunction with the GALL, the generic aging lessons learned, upon their license renewal. So the idea would be that if you run into more problems, then you would increase the frequency accordingly.

MEMBER ABDEL-KHALIK: But some sites inspect cable vaults as frequently as every two weeks.

MR. JENKINS: It depends on the amount of -- the possibility that you could have a problem.

CHAIRMAN CORRADINI: Okay.

MR. PAL: Conclusion. We looked at the 8.2. They need to be regardless of interests 17, 18, and 65. And in 8.3.2, that's where they discussed the sufficient blackout procedure.

CHAIRMAN CORRADINI: Any questions to Tom, general questions? Otherwise, I'd like to go around and get comments from --

MR. KEVERN: That's the end of our presentation. We do not have any formal closeout. We'll just wait for comments back from the staff. During the presentations, unless I missed something, I detected no takeaway items from the staff, so that may change here momentarily. We'll see.

CHAIRMAN CORRADINI: So, Graham, let's

start with you this time.

CONSULTANT WALLIS: Well, I don't have anything I really wanted to bring up. I was a little puzzled by this PRA generic matter, but I'm not going to push that, really. I think it's going to work out.

The thing I really take away from it, which is not something for North Anna, is that we didn't get a chance to get this simulator designed and operating. That's the real thing that I take away. The rest of it seems to be fairly straightforward, and the staff appears to have things under control.

CHAIRMAN CORRADINI: Tom?

CONSULTANT KRESS: It's been my experience that staff knows how to do these SER reviews and this sort of thing, although this is the first COL. They seem to have the process down pat, and everything looks all right. I think ACRS's review of what the staff does should be to assure the staff that they've done a good job. It's very difficult for me to look at these slides and the SER itself.

It all has the appearance that they've done a great job. They've gotten appropriate guidance, and they've asked the right questions. They have open items that look good to me, and I'll frankly be a little blunt here. I don't see that ACRS has

much added value in this process. I think it's basically a waste of ACRS's and the staff's time to actually do these SER reviews. I think --

CHAIRMAN CORRADINI: For the COLs.

CONSULTANT KRESS: Well, COLs, yes, the SERs, maybe not, but I think I would, if I were ACRS, I would look for a way to have more added value and perhaps do a better job of reviewing the FSAR or maybe just sample certain parts of the SER that they want to review. Otherwise, I get really frustrated trying to -- it just looks to me like they do a great job, and I think they do, and so --

CONSULTANT WALLIS: So you're frustrated by the fact that they do a good job?

CONSULTANT KRESS: No, I'm frustrated by the fact that I can't find anything wrong with it. Our job is to find something wrong with what they do. Anyway, that's just my view on this.

CHAIRMAN CORRADINI: Would it be any different if it weren't in parallel? Would there be added value if it weren't in parallel, or is this the only place that it might be added value, the fact that the DCD, the design certification is going on simultaneously, so we can bring those folks back up and beat them up in a different venue?

CONSULTANT KRESS: I don't think it would make much difference. I think the DCD is where you really do have some added value.

CHAIRMAN CORRADINI: So you think, series or parallel, the added value for review of the SES for the COL is questionable.

CONSULTANT KRESS: Yes. In fact, I think the staff knows how to do those.

CHAIRMAN CORRADINI: Okay.

CONSULTANT KRESS: And I think maybe just you could do some samples every now and then, just to keep the staff on their toes. I found nothing wrong with what I heard today.

MEMBER ABDEL-KHALIK: I agree with what Tom said, but I would caution that this may be the case here, because there are a lot of items incorporated by reference.

CONSULTANT KRESS: That may be.

MEMBER ABDEL-KHALIK: And if there are a lot more plant-specific items, then that would require, you know, a closer look. And, to me, that's where I'm not sure whether the process, what the staff goes through, can actually prevent anything from falling through the cracks, meaning any items that are plant-specific, how do you make sure that you close

the loop and make sure they do not have any impact on things that were incorporated by reference?

To me, I'm not yet convinced that that is -- that the staff has a disciplined structure and process that goes through that assessment. The saving grace, of course, is that apparently both evaluations are done by the same group of people, and, therefore, you know, there is no --

For the most part, there is no information exchanged between people, but without a sort of a structured discipline process for assessing whether these exceptions, whether these plant-specific exceptions would have any impact on anything else that was incorporated by reference, I'm not sure if you can catch everything. So my concern is process-oriented in a generic sense, rather than this particular application specific.

CHAIRMAN CORRADINI: Let me ask you a question. Is this the equivalent of essentially extended power or, yes, power uprates or license renewals in the sense that if you see one of these and you feel good, and you see two of these and you feel good, all of a sudden you go to his version, which is the added value becomes minimal?

MEMBER ABDEL-KHALIK: Right.

CHAIRMAN CORRADINI: Okay.

CONSULTANT WALLIS: Right. That is possible.

CONSULTANT KRESS: Yes, I think that's kind of my view of it.

CHAIRMAN CORRADINI: I think the expectation is that, well, at least, I thought, and I'll have to look to Tom to convince me or remind me, that this is -- for the reference COLAs, this will be kind of how it's done. For the -- I'm sorry, the reference. I'm sorry. I get all these names mixed up.

For the first one, this is how it would be done. For the next subsequent ones of the same reactor type, I think they will become much more --

MEMBER BLEY: Cookie cutter.

CHAIRMAN CORRADINI: -- similar to how we deal with the license renewals. Dennis?

MEMBER BLEY: One thing I'd really like to thank you guys for is the way the document comes so that it jumps back to the DCD. That's very helpful.

CHAIRMAN CORRADINI: It doesn't jump back. It jumps to.

MEMBER BLEY: Oh.

CHAIRMAN CORRADINI: It goes forward. It

doesn't go back.

MEMBER BLEY: It jumps back in history. I'd like to say I'm kind of pleased by what I heard about the GEH approach for submitting the detailed reports on DAC, and I am pleased that I've heard that all of the DAC will get a full NRC review, which was waffled around before, and that seems to be coming more firmly set up.

I'd sure like us to get involved at that point, at least for the first round on this DAC review. I think ACRS ought to take a look, because that's some key design information that wasn't in the original certification, and I'm still not completely comfortable with that. I think there are some key things there to look at.

As far as Tom's no added value comment, certainly on the cases where things are just taken by reference, I guess, in the future I think it would be better for us to not look at those unless we had specific questions but to get a little more detail on plant-specific details and things and how they are really thoroughly examined, the idea of some assurance that things can't fall between the cracks.

The PRA, I understand that this one is not realized for plant-specific conditions and

information. However, there were a series of things that were looked at and explained. The loss of the normal power supplies was looked at, and there was a justification given for that one. It was pretty clean.

The seismic fragilities are going to get verified later. That's a good thing. The loss of service water was identified, they key things that were talked about that are outside of the PRA.

I didn't see anything in what I read that really addressed the details of how what's at North Anna meets the assumptions that are embedded in the Tier 1 for that, and I didn't hear anything from staff on their review that indicated they looked at that.

That's the kind of thing that seems to me, when there are those plant-specific details, I'd like to really understand how we've met them, how we met the assumptions that they'll fit within all of the DCD, and that's where I think our review would be better served, to see some real details there. I didn't find the details in what I read, and I didn't hear them in what was presented today. I just heard that everything is good.

CHAIRMAN CORRADINI: The one thing that -- I think I captured most of what you said, but the one

thing that you said at the beginning I wanted to repeat back, because that's going to be a difficult one. What I heard you say is how can we get involved in the DAC ITAAC process later down the stream.

MEMBER BLEY: The DAC review by headquarters staff, that part is the part.

CHAIRMAN CORRADINI: If I understand it correctly, just to clarify, there is no directed DAC review by the headquarters staff. There is DAC review with the ITAACs in the region, and the headquarters staff supplement or assist.

MEMBER BLEY: What I've heard in two different meetings was on some of these key DAC, especially like the I&C --

CHAIRMAN CORRADINI: That it would be a headquarters-based review?

MEMBER BLEY: Headquarters-based review.

CHAIRMAN CORRADINI: So I think --

MEMBER BLEY: I thought I heard it today.

CHAIRMAN CORRADINI: Okay.

MEMBER BLEY: Maybe not.

CHAIRMAN CORRADINI: That's fine.

MEMBER BLEY: I thought I heard that today.

CHAIRMAN CORRADINI: But I guess what I was going to say is that I think we have to be invited,

but we are not required to nor expected to review as a matter of course.

MEMBER BLEY: I think we're not required or maybe expected. I don't know about the invitation. I'd sure like to wedge our way into it.

CHAIRMAN CORRADINI: Okay.

MEMBER BLEY: I think that's crucial, especially something like the I&C DAC that's so pervasive and such a large part of the design. Normally, we'd go through a complete design review, and we'd be involved in that, and I think that's important, and some of the others are probably less important.

CHAIRMAN CORRADINI: Did you have other comments?

MEMBER BLEY: No.

CHAIRMAN CORRADINI: I'm sorry. I didn't mean to interrupt. Okay, so I guess I don't have anything in particular beyond this. I've captured -- the simulator one I'm going to get the subcommittee to answer about where it fits in beyond -- as essentially a part of human factors.

I guess for -- let me first start off in thanking the folks from Dominion for coming this long distance, what, 100 miles? But joining us and going

through the COL, at least the initial chapters of the COL. I guess I caution everybody saying that we have an added value, just add since we only went through some of the chapters of the very first COL, so I would reserve my judgment on value added just yet.

I would remind the subcommittee, even the four people that scooted out on us here for other things, that we have meetings on the -- and, Chris, help me --

MR. BROWN: I'm looking at the schedule now.

CHAIRMAN CORRADINI: The 21st and 22nd is what my memory serves me, in July, to go through the other chapters, and we have an additional day set aside for the 21st of August to cover the rest of the chapters of the COL, and so those are set pretty much in stone. We will not have a meeting, ESBWR, on the 20th of August. That has been pushed back, so we will get to the rest of the chapters of the COL on the 21st and 22nd of July and the 21st of August.

I want to extend my thanks --

CONSULTANT WALLIS: No ESBWR until when?

CHAIRMAN CORRADINI: TBD. I will get back to you.

CONSULTANT WALLIS: Get back to me, but

definitely July and August.

CHAIRMAN CORRADINI: There are six -- definitely in August. There are six to seven days on design certification. My understanding is GEH and the staff have agreed to not have anything in the summertime for a number of reasons, and we'll get back to you with those dates.

I wanted to thank the staff for their presentations. I think the combination of what was done by Dominion and the staff helped us a lot, at least in understanding the process for the COL, since we're the first ones out of the box, as far as I can tell.

Other than that, I'll try to write up some notes. I will also tell the subcommittee we have a letter, an interim letter. We enjoy interim letters, an interim letter for the September meeting on all the chapters that we review over the summertime, and that's kind of the deliverable for us in the full committee meeting in September. And, other than that, I guess I thank everybody. I hope we finish the DCD and we finish the COL, if you know what I mean.

Tom?

MR. KEVERN: Can I make one comment, please?

CHAIRMAN CORRADINI: Yes.

MR. KEVERN: One of my only comments was saying this is a first, and so I'm sure we'll have lessons learned. What troubles me most about the wrap up that has been coordinated, Dr. Corradini, is the question about the process, and I say in that area the staff failed to do a good job, because we were going through here.

That process as far as not letting -- ensuring that nothing fell through the crack we would have addressed. Obviously, we didn't, so whatever kind of feedback you can give us, the staff, some specificity so the next time with North Anna or some other applicant where we've had that done. We think we have. It's just we clearly did not explain it well.

CHAIRMAN CORRADINI: That's okay. We have three more days to ask it again to you, so you have some resurrection chances there to come back and solve that.

MR. KEVERN: We will practice this.

CHAIRMAN CORRADINI: So, meeting is adjourned.

(Whereupon, the foregoing matter was adjourned at 3:11 p.m.)

North Anna 3

North Anna Unit 3 COLA Presentation to ACRS Subcommittee Chapter 15

Dominion

Chapter 15, Safety Analysis: Chapter Topics

- Analytical Approach
- Nuclear Safety Operational Analysis
- Analysis of Anticipated Operational Occurrences
- Analysis of Infrequent Events*
- Analysis of Accidents
- Special Event Evaluations
- ESP Information*

* FSAR contains supplemental information (beyond DCD content) on this topic

Chapter 15, Safety Analysis: Supplemental Information

15.3 Analysis of Infrequent Events

NAPS SUP

Identified procedural use of nuclear instrumentation to aid in detecting a possible mislocated fuel bundle after fueling operations

Chapter 15, Safety Analysis: Supplemental Information

15.6 ESP Information

NAPS SUP

NAPS ESP VAR

Incorporated accidents in ESP Application SSAR Chapter 15 except that information related to the ESBWR is replaced by DCD, Rev. 5, Chapter 15 (the SSAR used DCD Rev. 1)

Chapter 15, Safety Analysis: SER Open Items

- No Open Items
- No Confirmatory Items

North Anna 3

North Anna Unit 3 COLA Presentation to ACRS Subcommittee Chapter 17

Dominion

Chapter 17, Quality Assurance: Chapter Topics

- Quality Assurance During Design*
- Quality Assurance During Construction and Operations*
- Quality Assurance Program Description*
- Reliability Assurance During Design Phase*
- Quality Assurance Program Description – Design Certification, Early Site Permits, and New License Applicants*
- Maintenance Rule Program*

* FSAR contains supplemental information (beyond DCD content) on this topic

Chapter 17, Quality Assurance: Supplemental Information

17.1 Quality Assurance (QA) During Design

NAPS SUP Incorporated QA program applied during preparation of ESPA

NAPS SUP Referred to Section 17.5 for QA program applied during COLA preparation and site specific design activities

Chapter 17, Quality Assurance: Supplemental Information

17.2 Quality Assurance During Construction and Operation

NAPS COL Referred to Section 17.5 for QA program applied during construction and operations phases

NAPS COL Referred to Section 17.5 for QA program applied to design activities required to adapt the certified plant design to NAPS plant-specific implementation

Chapter 17, Quality Assurance: Supplemental Information

17.3 Quality Assurance Program Description

NAPS COL Referred to Section 17.5 to address COL Item that requires COL Applicant to provide a QAPD describing the overall project QA program

Chapter 17, Quality Assurance: Supplemental Information

17.4 Reliability Assurance Program During Design Phase

STD COL Provided description of operational reliability assurance activities. Objectives are integrated into QA, Maintenance, and other operational (e.g., ISI/IST) programs

Chapter 17, Quality Assurance: Supplemental Information

17.5 Quality Assurance Program Description – Design Certification, Early Site Permits, and New License Applicants

NAPS COL Identified QA Programs for:

- ESPA preparation: described in SSAR Chapter 17
- Safety-related activities performed prior to start of construction: DOM-QA-1 (existing fleet program)
- Plant-specific design, construction, operations: DOM-QA-2 (based on NEI 06-14)

Chapter 17, Quality Assurance: Supplemental Information

17.6 Maintenance Rule

STD COL Provided description of program by incorporating NRC-approved NEI 07-02A, ‘Generic FSAR Template Guidance for Maintenance Rule Program Description for Plants Licensed Under 10 CFR Part 52’

STD SUP Provided description of Maintenance Rule Program relationship with reliability assurance activities

Chapter 17, Quality Assurance: SER Open Items

- Two Open Items
  - Related to final NRC acceptance of NEI template 06-14, Rev. 6
- No Confirmatory Items

North Anna 3

North Anna Unit 3 COLA Presentation to ACRS Subcommittee Chapter 18

Dominion

Chapter 18, Human Factors Engineering: Chapter Topics

- MMIS and HFE Program Management
- Operating Experience Review
- Functional Requirements Analysis and Allocation of Functions
- Task Analysis
- Staffing and Qualifications
- Human Reliability Analysis

Chapter 18, Human Factors Engineering: Chapter Topics (cont.)

- Human-System Interface Design
- Procedure Development
- Training Program Development
- Human Factors Verification and Validation
- Design Implementation
- Human Performance Monitoring*

* FSAR contains supplemental information (beyond DCD content) on this topic

Chapter 18, Human Factors Engineering: Supplemental Information

18.13 Human Performance Monitoring

STD COL Provided milestone for implementing HPM program: prior to beginning first licensed operator training class

Chapter 18, Human Factors Engineering: SER Open Items

- No Open Items
- No Confirmatory Items

North Anna 3

North Anna Unit 3 COLA Presentation to ACRS Subcommittee Chapter 19

Dominion

Chapter 19, Probabilistic Risk Assessment and Severe Accidents: Chapter Topics

- PRA Results and Insights*
- Severe Accident Evaluations
- PRA Maintenance
- Conclusions*
- Regulatory Treatment of Non-Safety Systems (RTNSS)
- Availability Controls Manual
- Deterministic Analysis for Containment Pressure Capability
- Probabilistic Analysis for Containment Pressure Fragility
- Summary of Plant-Specific PRA Review*

* FSAR contains supplemental information (beyond DCD content) on this topic

Chapter 19, Probabilistic Risk Assessment and Severe Accidents: Supplemental Information

19.2 PRA Results and Insights

STD COL Commitment to compare as-built SSC High Confidence Low Probability of Failure (HCLPF) values or other assumptions to those assumed in ESBWR seismic margin analysis shown in DCD

- Minimum HCLPF value of 1.67 SSE will be met for SSCs in DCD table
- Will be completed prior to fuel load

Chapter 19, Probabilistic Risk Assessment and Severe Accidents: Supplemental Information

19.5 Conclusions

NAPS SUP There are no significant changes from certified design PRA

Chapter 19, Probabilistic Risk Assessment and Severe Accidents: Supplemental Information

19AA Summary of Plant-Specific PRA Review

NAPS SUP As part of development of certified design PRA, site and plant-specific information were reviewed to determine if any changes from certified design PRA were warranted

Chapter 19, Probabilistic Risk Assessment and Severe Accidents: SER Open Items

- No Open Items
- No Confirmatory Items

North Anna 3

North Anna Unit 3 COLA Presentation to ACRS Subcommittee Chapter 1

Dominion

Chapter 1, Introduction and General Description of Plant

- Topics of Discussion
  - COLA structure
  - Incorporate by reference (IBR)
  - COLA Supplements
  - Left margin annotations (LMAs)
  - Chapter 1 content
  - SER Open Items

COLA Structure

- Part 1 General and Administrative Information
- Part 2 FSAR
- Part 3 Environmental Report
- Part 4 Technical Specifications
- Part 5 Emergency Plan
- Part 6 Not used
- Part 7 Departures Report
- Part 8 Security Plan
- Part 9 Not used
- Part 10 Tier 1/ITAAC

FSAR: Incorporate by Reference (IBR)

NAPS FSAR IBRs:

- ESBWR DCD as permitted by 10CFR52.55(c)
- ESPA SSAR
- Various NEI templates

FSAR Supplemental Information

- Supplemental information falls into one of the following categories:
  - COL Item
  - ESP COL Action Item
  - ESP Permit Condition
  - Conceptual Design Information
  - Supplemental Information (e.g., SRP)

FSAR Left Margin Annotations (LMAs)

Annotation	Basis for Addition	Explanation
{STD} or [NAPS] COL X.Y-#-A	{Standard} or [Plant-Specific] COL Item	FSAR information that addresses a DCD COL Item that is {common for all parallel applicants} [plant specific]
{STD} or [NAPS] CDI	{Standard} or [Plant-Specific] Conceptual Design Information	A Conceptual Design Information (CDI) designation is used to identify FSAR information that replaces CDI in the DCD {common for all parallel applicants} [plant specific].
{STD} or [NAPS] SUP X.Y-#	{Standard} or [Plant-Specific] Supplemental Information	Supplemental FSAR information that is {identical for all parallel applicants} [plant specific].
NAPS ESP COL X.Y-#	ESP COL Item	ESP COL Action items identify matters that an applicant for a construction permit or operating license addresses in a COLA.
NAPS ESP VAR X.Y.Z-#	ESP Variance	A request for an ESP Variance is a request for deviation from one or more site characteristics, design parameters, or terms and conditions of the ESP; or from the SSAR.
NAPS ESP PC #	ESP Permit Condition	ESP Permit Conditions are requirements to take certain actions as specified in that permit.
ESP COR	ESP SSAR Correction	Correction to the information provided in the ESP safety analysis report in order to ensure that the information is complete and accurate for FSAR

FSAR Chapter 1 Content

- General plant description
- Identification of agents and contractors
- Material incorporated by reference
- References to drawings
- References to interface material
- Conformance with NRC guidance documents
- Technical resolutions of Task Action Plan Items, new Generic Issues, New Generic Safety Issues and Chernobyl Issues
- Impact of construction on Units 1 and 2
- Response to TMI items
- Industry operating experience

Chapter 1 – SER Open Items

- Four Open Items
  - SER for ESBWR design certification application
  - Construction impacts on Units 1 and 2: staff still evaluating
  - DOE contract number for disposal of high-level radioactive waste and spent nuclear fuel
  - Licenses to receive, possess, and use source, byproduct, and special nuclear material

North Anna 3

North Anna Unit 3 COLA Presentation to ACRS Subcommittee Chapter 4

Dominion

Chapter 4, Reactor: Chapter Topics

- Fuel System Design
- Nuclear Design*
- Thermal and Hydraulic Design
- Reactor Materials
- Functional Design of Reactivity Control System
- Typical Control Rod Patterns and Associated Power Distribution for ESBWR*
- Fuel Licensing Acceptance Criteria
- Control Rod Licensing Acceptance Criteria
- Stability Evaluation

* FSAR contains supplemental information (beyond DCD content) on this topic

Chapter 4, Reactor: Supplemental Information

4.3 Nuclear Design

STD COL Confirmed no changes to the fuel, control rod, or core design from that described in the referenced certified design

Chapter 4, Reactor: Supplemental Information

4A Typical Control Rod Patterns and Associated Power Distribution for ESBWR

STD COL Confirmed no changes to the fuel, control rod, or core design from that described in the referenced certified design

Chapter 4, Reactor: SER Open Items

- No Open Items
- No Confirmatory Items

North Anna 3

North Anna Unit 3
Presentation to ACRS Subcommittee
FSAR Chapter 6

Dominion

Chapter 6, Engineered Safety Features: Chapter Topics

- DBA Engineered Safety Features Materials
- Containment Systems*
- Emergency Core Cooling Systems
- Control Room Habitability Systems*
- Atmosphere Cleanup Systems
- Preservice and Inservice Inspection and Testing of Class 2 and 3 Components and Piping*

* FSAR contains supplemental information (beyond DCD content) on this topic

Chapter 6, Engineered Safety Features: Supplemental Information

6.2 Containment Systems

STD SUP Procedures address activities required to limit debris in containment

STD COL Committed to determine pipe length from containment to inboard/outboard isolation valve as part of ITAAC

Chapter 6, Engineered Safety Features: Supplemental Information

6.4 Control Room Habitability Systems

STD COL — Procedures and training address applicable aspects of NRC GL 2003-01 and are consistent with intent of Generic Issue 83

NAPS SUP — Evaluated impact of Unit 2 DBA on Unit 3 control room

NAPS COL — Performed toxic gas analysis of potentially hazardous chemicals for impact on Unit 3 control room

Chapter 6, Engineered Safety Features: Supplemental Information

6.6 Preservice and Inservice Inspection and Testing of Class 2 and 3 Components and Piping

STD COL — Described PSI/ISI programs and FAC monitoring program, including implementation milestones

STD COL — Described plan for preserving accessibility for PSI/ISI NDE of Class 2 and 3 austenitic or dissimilar metal welds during construction

- Defined preferred NDE method for PSI/ISI

STD COL — System leakage and hydrostatic pressure tests will meet ASME Code, including regulatory limitations

Chapter 6, Engineered Safety Features: SER Open Items

- No Open Items in this chapter
  - However, SER references two Open Items in Chapter 2 related to toxic gas analysis for control room habitability
- Two Confirmatory Items

North Anna 3

North Anna Unit 3 COLA Presentation to ACRS Subcommittee Chapter 7

Dominion

Chapter 7, Instrumentation and Control Systems

- Entire chapter is IBR
- No SER Open Items or Confirmatory Items

North Anna 3

North Anna Unit 3 COLA Presentation to ACRS Subcommittee Chapter 8

Dominion

Chapter 8, Electric Power: Chapter Topics

- Introduction*
- Offsite Power Systems*
- Onsite Power Systems*
- Miscellaneous Electrical Systems*

* FSAR contains supplemental information (beyond DCD content) on this topic

Chapter 8, Electric Power: Supplemental Information

8.1 Introduction

NAPS SUP Provided overview of the utility power grid, including the switchyards, transformers, and the transmission lines

Chapter 8, Electric Power: Supplemental Information

8.2 Offsite Power Systems

NAPS COL Described the transmission system including lines and voltages, switchyard arrangement, and transmission line map

NAPS COL Described the normal and alternate preferred power sources, and the equipment in the circuits

Chapter 8, Electric Power: Supplemental Information

8.2 Offsite Power Systems (cont)

NAPS COL Described the switchyard including equipment design criteria, capacities, and ratings

NAPS COL AC/DC station service is provided in the switchyard

NAPS COL Described switchyard transformer protection equipment and criteria

Chapter 8, Electric Power: Supplemental Information

8.2 Offsite Power Systems (cont)

NAPS COL — Described the switchyard protective relaying, coordination with PJM, the Regional Transmission Organization (RTO), and the results of PJM's interconnection study

NAPS SUP — Described inspection and testing of the transmission lines and switchyard

Chapter 8, Electric Power: Supplemental Information

8.2 Offsite Power Systems (cont)

NAPS COL

Described the results of a system impact study that analyzed load flow, reliability, transient stability, and fault analysis for addition of Unit 3

Chapter 8, Electric Power: Supplemental Information

8.2 Offsite Power Systems (cont)

NAPS COL

Described Switchyard Interface Agreement and protocols for maintenance, communications, switchyard control, and system analysis established to safely operate and maintain power station interconnection to transmission system

Chapter 8, Electric Power: Supplemental Information

8.2 Offsite Power Systems (cont)

NAPS SUP Provided failure modes and effects analyses for transmission system, switchyard, and intermediate switchyard

Chapter 8, Electric Power: Supplemental Information

8.3 Onsite Power Systems

NAPS SUP Described intermediate switchyard used to transition off-site power from NAPS switchyard to Unit 3 main power transformers, and UATs

NAPS SUP Described training and procedures to mitigate a station blackout (SBO)

Chapter 8, Electric Power: Supplemental Information

8A Miscellaneous Electrical Systems

NAPS COL Cathodic protection system design in accordance with National Association of Corrosion Engineers (NACE) standards

Chapter 8, Electric Power: SER Open Items

- No Open Items
- No Confirmatory Items

North Anna 3

North Anna Unit 3 COLA Presentation to ACRS Subcommittee Opening Comments

Dominion

Dominion's North Anna 3 Licensing Activities

• ESP Application submitted	9/25/03
• ESP issued	11/27/07
• COLA submitted	11/27/07
• Draft EIS issued	12/17/08
• COLA Revision 1 submitted	12/20/08

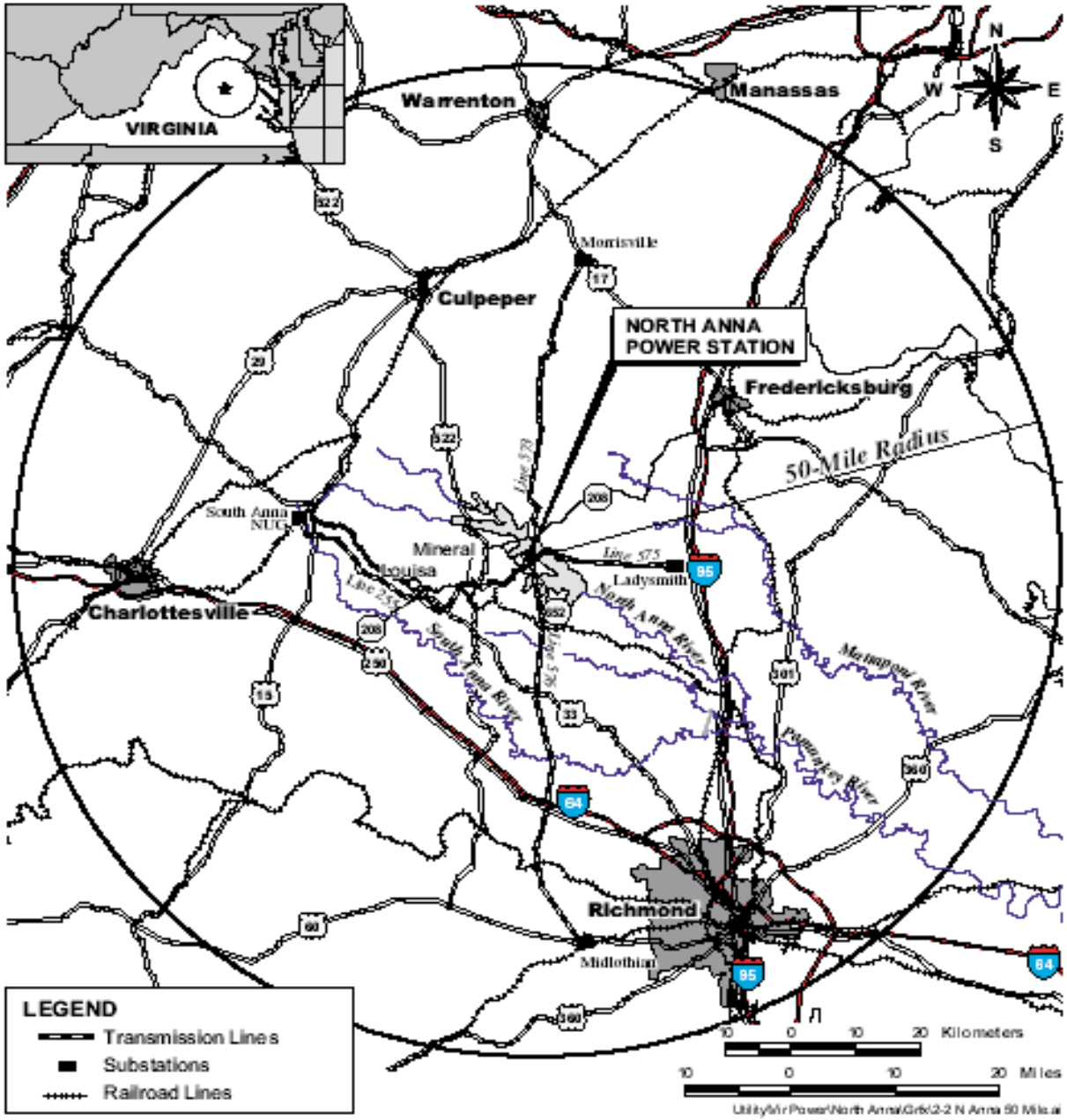
VIRGINIA
Warrenton
Manassas
N
W
E
S
Morrisville
Culpeper
NORTH ANNA
POWER STATION
Fredericksburg
50-Mile Radius
South Anna
NUG
Mineral
Louisa
Ladysmith
Charlottesville
North Anna River
South Anna River
Mattaponi River
Pamunkey River
Richmond
Midlothian
LEGEND
Transmission Lines
Substations
Railroad Lines
10 0 10 20 Kilometers
10 0 10 20 Miles

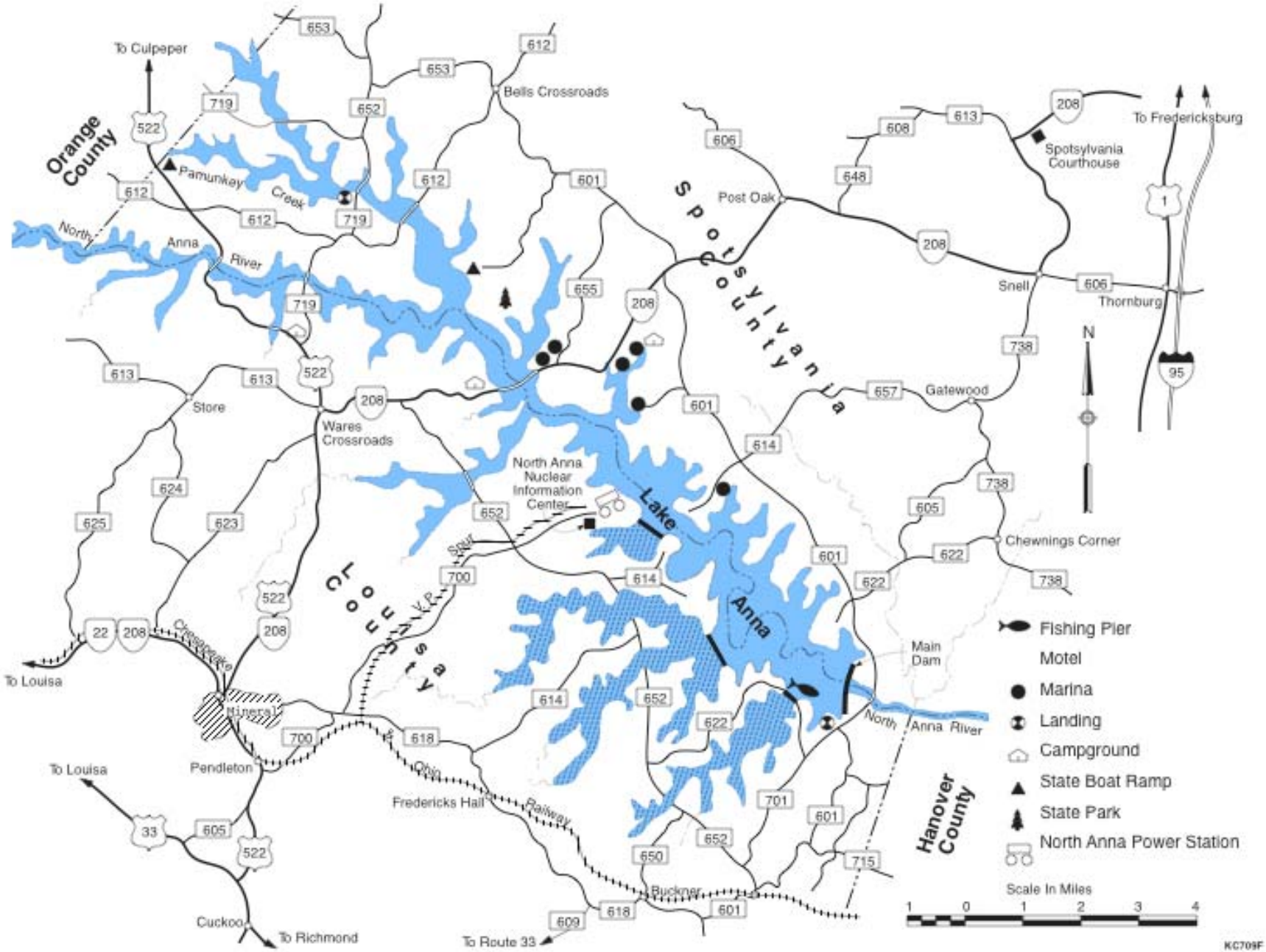
Orange County
Spotsylvania County
Louisa County
Hanover County
Lake Anna
North Anna River
Pamunkey Creek
To Culpeper
Bells Crossroads
Post Oak
Spotsylvania Courthouse
To Fredericksburg
Snell
Thornburg
Gatewood
Store
Wares Crossroads
North Anna Nuclear Information Center
Chewnings Corner
Main Dam
To Louisa
Mineral
Pendleton
Fredericks Hall
Buckner
Cuckoo
To Richmond
To Route 33
Chesapeake & Ohio Railway
Fishing Pier
Motel
Marina
Landing
Campground
State Boat Ramp
State Park
North Anna Power Station
Scale In Miles
1 0 1 2 3 4
N
KC709F

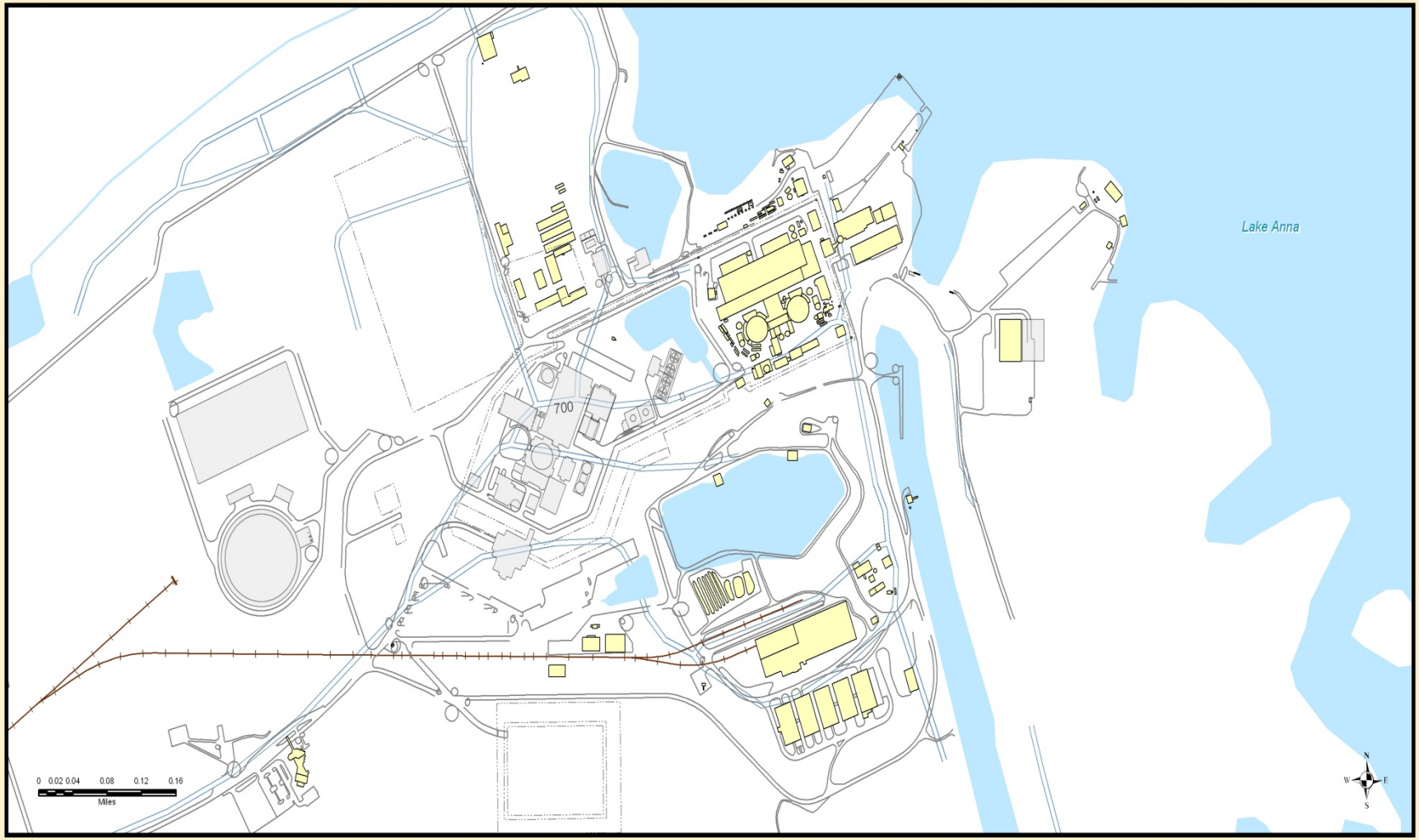

Legend

- Road
- Railroad
- Existing Structure
- Planned Structure
- Water Body

North Anna Unit 3

Projection: Virginia South State Plane
Datum: North American Datum 1983
V. Datum: NGVD 29 (Surface Topography)

GIS Map Code: US-ANNA-000111-R000B

View of North Anna 3 from the South

Introduction of COLA Team's Meeting Participants

Dominion

- Marvin Smith
- Joe Hegner
- John Disosway
- Tom Brunelli
- Gina Borsh

GEH

- Rick Kingston
- Patricia Campbell
- Rick Wachowiak
- Frostie White

Bechtel

- Rich Baker
- Doug Kemp
- Geoff Quinn
- Ken Jha

Enercon

- Al Schneider

Excel Services

- Tom Hicks

Other subject matter experts by phone

Presentation to the ACRS Subcommittee

North Anna Unit 3 COL Application Review

Safety Evaluation Report with Open Items

Chapters 1, 4, 6, 7, 8, 15, 17, 18, & 19

June 18, 2009

ACRS Subcommittee Presentation
North Anna Unit 3 COLA
SER/OI

Staff Overview

- SER/OI nearing completion (19 chapters)
  - Today - Chapters 1, 4, 6, 7, 8, 15, 17, 18, & 19 (publicly available in ADAMS)
  - July 21 & 22 – additional chapters
- North Anna 3 COL Application, Revision 1 (12/08)
- Incorporated by reference
  - ESBWR Design Control Document, Revision 5
  - Early Site Permit (ESP-003)
- Milestone – 1st COLA SER/OI presentation to ACRS
- Presentation sequence
  - Dominion present FSAR content
  - Staff present evaluation

Presentation to the ACRS Subcommittee

North Anna Unit 3 COL Application Review

SER/OI Chapter 1
Introduction and General Description

June 18, 2009

ACRS Subcommittee Presentation
SER/OI Chapter 1

Staff Review Team

- Project Managers
  - Jeffrey Cruz, Chief, NGE1
  - Thomas Kevern, Lead PM, DNRL/NGE1
  - Janelle Jessie, Chapter PM, DNRL, NGE1
  - Stephen Koenick, Technical Reviewer, DNRL/NO

ACRS Subcommittee Presentation
SER/OI Chapter 1

Presentation Outline

- Content of COL application
  - Incorporated by Reference
  - COL items (STD and/or NAPS)
  - Conceptual Design Information (CDI)
  - Information related to Early Site Permit (ESP)
  - Other Supplemental Information
- Regulations and Review Guidance
- Technical Topics of Interest
- RAIs / Open Items
- Conclusions
- Post COL activities
- Discussion / Committee questions

ACRS Subcommittee Presentation
SER/OI Chapter 1

Regulations and Review Guidance

- 10 CFR Part 52, Subpart C
  - 10 CFR 52.79
  - 10 CFR 52.83 – Finality (DC and ESP)
    - Open Item 1-1 (DC)
- NUREG 0800 (SRP)
- Regulatory Guide 1.206
- Design Centered Review Approach
  - RCOL, SCOL

ACRS Subcommittee Presentation
SER/OI Chapter 1

Staff Evaluation

- Part 1 SER Appendix A
- **Part 2 SER (19 Chapters)**
- Part 3 SEIS
- Part 4 SER Chapter 16
- Part 5 SER Chapter 13
- Part 6 Not used
- Part 7 SER (19 Chapters)
- Part 8 SER Chapter 13
- Part 9 Not used
- Part 10 SER Chapter 14

ACRS Subcommittee Presentation
SER/OI Chapter 1

Approach to SER

- SER Format
  - Introduction
  - Summary of Application
  - Regulatory Basis
  - Technical Evaluation
  - Post Combined License Activities
  - Conclusions

- Template Language

ACRS Subcommittee Presentation
SER/OI Chapter 1

Review of FSAR Chapter 1

- General plant description
- Comparison with other Facilities
- Identification of agents and contractors
- Requirements for further technical information
- Material incorporated by reference
- Drawings and other detailed information

ACRS Subcommittee Presentation
SER/OI Chapter 1

Review of FSAR Chapter 1

- Interfaces with Standard Design
- Conformance with SRP and Applicability of Codes and Standards
- Summary of COL Items
- Technical resolutions of Task Action Plan Items, new Generic Issues, New Generic Safety Issues and Chernobyl Issues
- **Impact of Construction Activities on Units 1 and 2 (OI 1-2)**
- Response to TMI items
- Industry operating experience

ACRS Subcommittee Presentation
SER/OI Chapter 1

Other Regulatory Considerations

- Technical Qualifications
- **Nuclear Waste Policy Act (OI 1-03)**
- Consultation with DHS
- **Receipt, Possession, and Use of Source, Byproduct and SNM (OI 1-04)**

ACRS Subcommittee Presentation
SER/OI Chapter 1

SER OI/Post COL Activities

- Post COL Activity
  - STD COL 1.7-1-H: Final Design Configuration Confirmation

- Four Open Items

  1-01, 1-02, 1-03, 1-04

ACRS Subcommittee Presentation
SER/OI Chapter 1

Discussion/Committee Questions

Presentation to the ACRS Subcommittee

North Anna Unit 3 COL Application Review

SER/OI Chapter 4
Reactor

June 18, 2009

ACRS Subcommittee Presentation
SER/OI Chapter 4

Staff Review Team

- Project Managers
  - Thomas Kevern, Lead PM, DNRL/NGE1
  - Michael Eudy, Chapter PM, DNRL/NGE1

- Technical Staff
  - Joseph Donoghue, Chief, SRSB
  - Neil Ray, Acting Chief, CIB2
  - James Gilmer, Lead Reviewer, RSB
  - Robert Davis, Lead Reviewer, CIB2

ACRS Subcommittee Presentation
SER/OI Chapter 4

Content of Chapter 4

- Incorporated by Reference

  4.2 Fuel System Design
  4.3 Nuclear Design
  4.4 Thermal and Hydraulic Design
  4.5 Reactor Materials
  4.6 Functional Design of Reactivity Control System
  Appendix 4A Typical Control Rod Pattern & Associated Power Distribution for ESBWR
  Appendix 4B Fuel Licensing Acceptance Criteria
  Appendix 4C Control Rod Licensing Acceptance Criteria
  Appendix 4D stability Evaluation

ACRS Subcommittee Presentation
SER/OI Chapter 4

Content of Chapter 4

- COL items
  - STD COL 4-3-1-A- Variances from the Certified Design: There are no changes to the fuel or core design from that described in the reference design
  - STD COL 4A-1-A- Variances from the Certified Design: There are no changes to the fuel or core design from that described in the reference design

ACRS Subcommittee Presentation
SER/OI Chapter 4

Regulations and Review Guidance

- Same as given in the respective DCD SER Sections

ACRS Subcommittee Presentation
SER/OI Chapter 4

Technical Topics of Interest

- Technical Topics
  - Same as in the DCD review
- RAIs / Open Items - None
- Conclusions
  - Same as in the DCD SER
- Post COL activities
  - Will be identified at the conclusion of the DCD review

ACRS Subcommittee Presentation
SER/OI Chapter 4

Discussion/Committee Questions

Presentation to the ACRS Subcommittee

North Anna Unit 3 COL Application Review

SER/OI Chapter 6
Engineered Safety Features

June 18, 2009

ACRS Subcommittee Presentation
SER/OI Chapter 6

Staff Review Team

- Project Managers
  - Thomas Kevern, Lead PM, DNRL/NGE1
  - Michael Eudy, Chapter PM, DNRL/NGE1

- Technical Staff
  - Carolyn Lauron, Acting Chief, RSAC
  - Mike Snodderly, Chief, SBCV
  - Neil Ray, Acting Chief, CIB2
  - Jay Lee/Rao Tamara, Lead Reviewers, RSAC
  - George Georgiev, Lead Reviewer, CIB2
  - Syed I. Haider, Lead Reviewer, SBCV

ACRS Subcommittee Presentation
SER/OI Chapter 6

Technical Topics of Interest
6.2 Containment Systems

STD COL 6.2-1-H: Pipe Length from Containment to Inboard/Outboard Isolation Valve

- Isolation valves should be located as close to the containment as practical (GDCs 55, 56, 57)
- Pipe lengths not provided (Table 6.2-16…6.2-45)
- COL RAI 6.02.04-1
  - Piping design – GEH responsibility
- DCD RAI 6.2-157 S02
  - ESBWR DCD update
    - **Delete** COL 6.2-1-H
    - **Add** acceptance criteria for locating the isolation valves (DCD Tier 2, Section 6.2.4.2)
    - **Add** a new ITAAC (Table 2.15.1-2 Item 22)
- Revise FSAR
- Acceptable → COL RAI 6.02.04-2 → Confirmatory item

ACRS Subcommittee Presentation
SER/OI Chapter 6

6.2 Containment Systems (continued)

STD SUP 6.2-1: Inspections to Limit Debris

- Procedures for inspections to prevent debris inside containment

- Containment debris
  - LOCA, latent, foreign
  - Insulation, paint, concrete
  - Pump clogging

- Inspection procedures (RG 1.82)
  - Pool inspection
  - Drywell/wetwell inspections
  - Visual examination
  - Containment cleanliness program
  - Procedures for foreign & latent materials

ACRS Subcommittee Presentation
SER/OI Chapter 6

<u>STD SUP 6.2-1</u>: Inspections to Limit Debris (continued)

- COL RAI 6.02.01-1 → DCD RAI 6.2-173 S01
  - Suppression pool not credited post-LOCA
  - ESBWR DCD update
    - **State** that RG 1.82 is not applicable
    - **Delete** STD SUP 6.2-1
    - **Remove** references to cleanliness program
- **Revise** FSAR
- **<u>Acceptable</u>**
- COL RAI 6.02.01-1 → Confirmatory item

ACRS Subcommittee Presentation
SER/OI Chapter 6

Technical Topics of Interest

6.4 Control Room Habitability Systems

STD COL 6.4-1-A: CRHA Procedures and Training

- Regulatory requirements
  - NRC Generic Letter 2003-01
  - Generic Issue 83
- Develop and implement procedures and operator training for control room habitability
  - Sections 13.2 and 13.5
- Supplemental information is adequate
- **Acceptable**

ACRS Subcommittee Presentation
SER/OI Chapter 6

Technical Topics of Interest

6.4 Control Room Habitability Systems (continued)

<u>NAPS COL 6.4-2-A</u>: Toxic Gas Analysis

- The applicant made a commitment to identify potential site-specific toxic or hazardous materials that may affect control room habitability, in order to meet TMI Action Plan III.D.3.4 and GDC 19.

- Potential sources of hazardous materials
  - Off-site industrial facilities and transportation routes
  - Units 1, 2, and 3 on-site storage

- Applicant's evaluation (Section 2.2)
  - CRHA toxic gas concentrations **<** **<u>Toxicity limits</u>** (RG 1.78 and National Air Quality Standards)
  - **Safety-related toxic gas monitoring instrumentation is not required**.

Technical Topics of Interest

6.4 Control Room Habitability Systems (Continued)

NAPS COL 6.4-2-A: Toxic Gas Analysis (Continued)

- Staff's evaluation of the technical adequacy of the applicant's toxic gas analysis for CRH (Section 6.4)
  - Staff Confirmatory Analyses
    - HABIT
    - Instantaneous release → vapor cloud → intake into CRHA
    - On-site N_2 and CO_2 storage acceptable (RG 1.78)
  - **Not complete**
    - Screening criteria at the CR intake (RAI 2.2.3-5)
  - **Any additional hazardous chemicals identified will be analyzed**

ACRS Subcommittee Presentation
SER/OI Chapter 6

Technical Topics of Interest

6.4 Control Room Habitability Systems (continued)

NAPS SUP 6.4-1: System Safety Evaluation

- Supplemental information to address the impact of a postulated DBA in Units 1/2 on the Unit 3 control room.

- Staff evaluation of the applicant's dose analysis
  - Confirmatory analysis (SER Section 2.3.4.4 & Chapter 15)
  - Audit

- Unit 3 control room dose from a postulated Unit 1/2 DBA
  - **Complies** with GDC 19
  - **Bounded** by the CR dose from a postulated **Unit 3 DBA**
    - Lower source term in Unit 1/2 DBA
    - Lower χ/Q in Unit 1/2 DBA
- Acceptable

ACRS Subcommittee Presentation
SER/OI Chapter 6

Technical Topics of Interest

6.6 PSI/ISI Program And Augmented Inspection Flow Accelerated Corrosion (FAC) Program

- Section 6.6 addressed Preservice and Inservice Inspection and Testing of Class 2 and 3 Components and Piping
  - STD COL 5.2-1-A – System Pressure Test is addressed in Chapter 5 of the COLA
  - STD COL 6.6-1-A – Plant Specific PSI/ISI program and Flow Accelerated Corrosion program
  - STD COL 6.6-2-A - NDE Accessibility Plan Description

ACRS Subcommittee Presentation
SER/OI Chapter 6

Technical Topics of Interest

6.6 PSI/ISI Program And Augmented Inspection Flow Accelerated Corrosion (FAC) Program

STD COL 6.6-1-A

- ISI program would conform to latest edition and addenda endorsed by 10 CFR 50.55a on a date 12 months prior to fuel load

- FAC Program follows the recommendations of EPRI NSAC-202L to identify susceptible components and PSI baseline will be performed prior to plant startup

- Accessibility for PSI/ISI affecting Class 2 and 3 components will be maintained as required by 10 CFR 50.55a(g)(3)

ACRS Subcommittee Presentation
SER/OI Chapter 6

6.6 PSI/ISI Program And Augmented Inspection Flow Accelerated Corrosion (FAC) Program

Post COL activities

- Section 6.6
  - PSI program will be implemented prior to initial plant startup
  - ISI program will be implemented prior to fuel load
  - FAC program will be implemented prior to fuel load

ACRS Subcommittee Presentation
SER/OI Chapter 6

Discussion/Committee Questions

Presentation to the ACRS Subcommittee

North Anna Unit 3 COL Application Review

SER/OI Chapter 7
Instrumentation and Control Systems

June 18, 2009

Presentation to the ACRS Subcommittee

North Anna Unit 3 COL Application Review

SER/OI Chapter 8
ELECTRIC POWER

June 18, 2009

ACRS Subcommittee Presentation
SER/OI Chapter 8

Staff Review Team

- Project Managers
  - Thomas Kevern, Lead PM, DNRL/NGE1
  - Michael Eudy, Chapter PM, DNRL/NGE1

- Technical Staff
  - Amar Pal, Lead Reviewer, EEB
  - Ronaldo Jenkins, Branch Chief, EEB

ACRS Subcommittee Presentation
SER/OI Chapter 8

Content of Chapter 8

- FSAR Chapter 8 incorporates by reference ESBWR DCD Chapter 8. Supplemental information and COL information items are provided in Sections 8.1, 8.2, 8.3.1, and 8.3.2.

- 8.1 Introduction
  -NAPS SUP 8.1-1 – North Anna 3 connection to the utility grid

- 8.2 Offsite Power System
  -NAPS COL 8.2.4-1A – Transmission System Description
  -NAPS COL 8.2.4-2A - Switchyard Description
  -NAPS COL 8.2.4-3A – Normal Preferred Power
  -NAPS COL 8.2.4-4A – Alternate Preferred Power
  -NAPS COL 8.2.4-5A – Protective Relaying
  -NAPS COL 8.2.4-6A - Switchyard DC Power
  -NAPS COL 8.2.4-7A -Switchyard AC Power

ACRS Subcommittee Presentation
SER/OI Chapter 8

Content of Chapter 8

- 8.2 Offsite Power System (continued)

  -NAPS COL 8.2.4-8A -Switchyard Transformer Protection

  -NAPS COL 8.2.4-9A - Stability & Reliability of the Offsite Transmission Power System

  -NAPS COL 8.2.4-10A -Interface Requirements

  -NAPS SUP 8.2-2 - Testing and Inspection

  -NAPS SUP 8.2-3 – Failure Mode and Effects Analysis

- 8.3.1 AC Power Systems (Onsite)

  -NAPS COL 8A.2.3-1A – Cathodic Protection System

  -NAPS SUP 8.3-1 – Onsite Power Description

- 8.3.2 DC Power Systems (Onsite)

  -NAPS SUP 8.3-2 – Safety-related Station Batteries and Battery Chargers – Station Blackout

ACRS Subcommittee Presentation
SER/OI Chapter 8

Regulations and Review Guidance

- GDCs: 5, 17, and 18
- 10 CFR 50.63 and 50.65
- Primary SRP Sections: 8.1, 8.2, 8.3.1, 8.3.2, and 8.4
- Regulatory Guides: 1.32, 1.118, 1.206, 1.160, and 1.182.
- Other guidance: BTP 8-3 and 8-6

NAPS COL 8.2.4-1-A Figure 8.2-201 500/230 kV Switchyard Single-Line Diagram

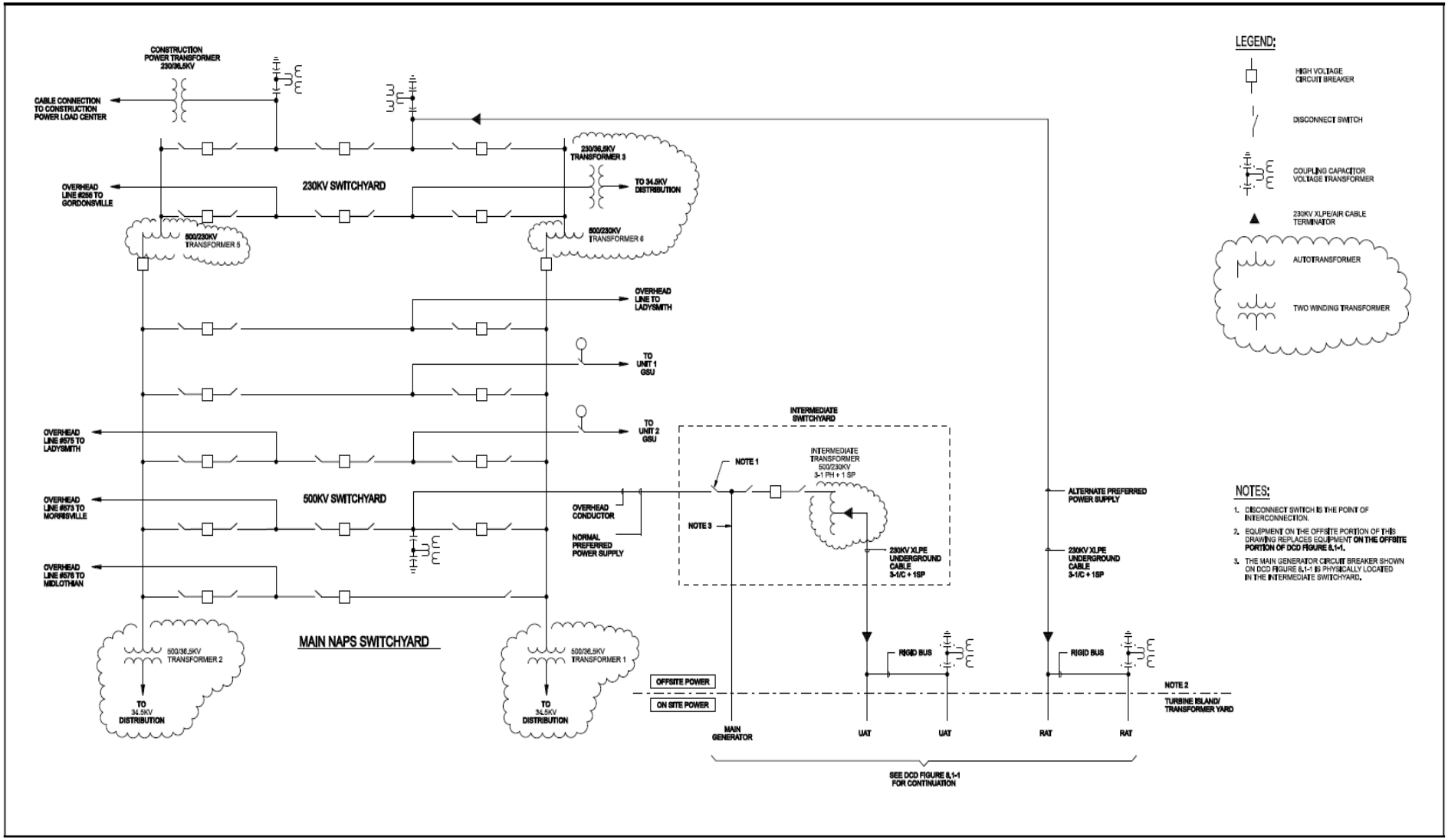

ACRS Subcommittee Presentation
SER/OI Chapter 8

Technical Topics of Interest

- <u>Section 8.2</u>

  - North Anna 3 switchyard is shared with existing Units 1 and 2.

  GDC 5 is satisfied with respect to sharing of switchyard components because Unit 3 UATs and RATs are not shared with existing units connected to the same grid and the capacity of the offsite power system is large compared to minimal safety-related loads.

  - Insulation degradation of underground power cables due to moisture. Metallic sheathed cables are used. Additionally, periodic inspection of manholes for water accumulation.

- <u>Section 8.3</u>

  - Incorporates by reference ESBWR DCD with no departures or supplements for SBO requirements.

  - Training and procedures to mitigate an SBO are site specific and are provided by the applicant.

ACRS Subcommittee Presentation
SER/OI Chapter 8

Conclusion

- Sections 8.1 - Introduction

  The applicant has adequately addressed supplemental information regarding North Anna 3 connection to the 500/230 kV switchyard through the unit main step-up transformer and an intermediate switchyard.

- Section 8.2 – Offsite Power System

  The applicant has adequately addressed COL information items NAPS COL 8.2.4-1-A thru 8.2.4-10-A involving the design details of the plant site switchyard and its interface with the local transmission grid and NAPS SUP 8.2-2 and 8.2-3 involving testing and inspection of switchyard components and failure modes and effects analysis. The staff concludes that the requirements of GDC 5, 17 and 18 and 10 CFR 50.65 are satisfied for this section.

ACRS Subcommittee Presentation
SER/OI Chapter 8

Conclusion

- Section 8.3.1 – AC Power System (Onsite)

  The applicant has adequately addressed the North Anna 3 COL item involving cathodic protection systems and supplemental information involving the transmission system and its electrical connection to the plant. The staff concludes that GDC 17 is satisfied for this section.

- Section 8.3.2 – DC System (Onsite)

  The applicant has adequately addressed North Anna 3 supplemental information pertaining to training and procedures to mitigate an SBO event. The staff concludes that 10 CFR 50.63 is satisfied for this section.

- Open Items- None
- Post COL Activities- None

ACRS Subcommittee Presentation
SER/OI Chapter 8

Discussion/Committee Questions

Presentation to the ACRS Subcommittee

North Anna Unit 3 COL Application Review

SER/OI Chapter 15
Safety Analyses

June 18, 2009

ACRS Subcommittee Presentation
SER/OI Chapter 15

Staff Review Team

- Project Managers
  - Thomas Kevern, Lead PM, DNRL/NGE1
  - Michael Eudy, Chapter PM, DNRL/NGE1

- Technical Staff
  - Carolyn Lauron, Acting Chief, RSAC
  - Joseph Donoghue, Chief, SRSB
  - Jay Lee, Lead Reviewer, RSAC
  - George Thomas, Lead Reviewer, SRSB

ACRS Subcommittee Presentation
SER/OI Chapter 15

Content of Chapter 15

- The North Anna FSAR, Revision 1, Chapter 15, “Safety Analyses,” incorporated by reference:
  - ESBWR DCD, Revision 5, Chapter 15, “Safety Analyses,” and
  - North Anna Site Safety Analysis Report (SSAR) in Early Site Permit (ESP) Application, Revision 9, Chapter 15, “Accident Analyses,” except that information related to the ESBWR in the SSAR is replaced by the ESBWR DCD, Revision 5, Chapter 15.
- There are no COL information items, open items, post COL activity items, or confirmatory items (outside of the ESBWR DCD)

ACRS Subcommittee Presentation
SER/OI Chapter 15

Scope of Presentation

- Radiological consequence analyses of the postulated design basis accidents at the proposed North Anna, Unit 3 site (Chapter 15, Section 15.4).

- All other remaining parts of Chapter 15 are incorporated by reference in its entirety.

ACRS Subcommittee Presentation
SER/OI Chapter 15

Regulations and Review Guidance

- 10 CFR 52.79(a)(1), “radiological consequence evaluation factors,”
- 10 CFR 100.21, “Non-seismic siting criteria,”
- GDC 19, “Control room,”
- NUREG-0800, Section 15.0.3, “Design Basis Accident Radiological Consequence Analyses for advanced light Water Reactors,” and
- Regulatory Guide 1.206, “Combined License Applications for Nuclear Power Plants.”

ACRS Subcommittee Presentation
SER/OI Chapter 15

Regulations and Review Guidance (continued)

10 CFR 52.79(a)(1) for COL Application10 CFR 52.47(a)(2) for Design Certification Application

"The applicant shall perform an evaluation and analysis of the postulated fission product release….. to evaluate the offsite radiological consequences."

"The fission product release assumed for this evaluation should be based upon a major accident….. Such accidents have generally been assumed to result in substantial meltdown of the core with subsequent release into the containment of appreciable quantities of fission products." The fission product release assumed for this evaluation should be based upon a major accident"

- **The ESBWR design met this requirement with an hypothetical reactor site (no specific reactor site is associated with the ESBWR design.)**

ACRS Subcommittee Presentation
SER/OI Chapter 15

Regulatory Issue

- Does the ESBWR design provide adequate mitigation of radiological consequences in the event of a major reactor accident to protect public health and safety at the proposed North Anna site, as demonstrated by meeting the siting dose acceptance criteria specified in 10 CFR 100.21 and 10 CFR 52.79?

- 25 rem TEDE at exclusion area boundary, low population zone, and 5 rem TEDE in the control room.

Technical Topics of Interest
Dose Calculations

$$CEDE = \sum_{i=1}^{N} (DCF_{CEDE})_i \sum_{j=1}^{T} (IAR)_{ij} (BR)_j (\chi / Q)_j$$

Radiation Dose = Dose Conversion Factors x ESBWR Source Terms x Breathing Rates x Atmospheric Dispersion Factors

- ESBWR used a set of hypothetical χ/Q values while North Anna used its site-specific χ/Q values

ACRS Subcommittee Presentation
SER/OI Chapter 15

Technical Topics of Interest
Dose Calculations

- Regulatory Guide 1.206, "Combined License Applications for Nuclear Power Plants,"
  - Regulatory Position C.III.1, "Information Needed for a Combined License Application Referencing a Certified Design," Section C.1.15.6.5, "Radiological Consequences."

"The COL applicant should show that site-specific short-term χ/Q values for the EAB, LPZ, and control room are within the χ/Q values assumed in the DCD."

ACRS Subcommittee Presentation
SER/OI Chapter 15

Conclusions

- The North Anna site-specific offsite and control room χ/Q values fall within those values used in the ESBWR DCD, Rev. 5 radiological consequence analyses for each of the DBA.

- Therefore, the North Anna site-specific offsite and control room total doses for each DBAs are lower than the ESBWR DCD, Revision 5 generic total doses for each DBA.

ACRS Subcommittee Presentation
SER/OI Chapter 15

Conclusions

- The ESBWR DCD, Revision 5, Chapter 15 radiological analyses show that the offsite and control room radiological consequences meet the regulatory dose acceptance criteria.
- Therefore, the North Anna demonstrated that the DBA offsite and control room radiological consequences also meet the regulatory dose acceptance criteria specified in 10 CFR 52.79 and 10 CFR 100.21.
- Conclusions are based on the information provided in the ESBWR DCD, Revision 5 and are subject to the future revisions of the ESBWR DCD to the final design certification.

ACRS Subcommittee Presentation
SER/OI Chapter 15

Discussion/Committee Questions

Presentation to the ACRS Subcommittee

North Anna Unit 3 COL Application Review

SER/OI Chapter 17
Quality Assurance Program

June 18, 2009

ACRS Subcommittee Presentation
SER/OI Chapter 17

Staff Review Team

- Project Managers
  - Thomas Kevern, Lead PM, DNRL/NGE1
  - Michael Eudy, Chapter PM, DNRL/NGE1

- Technical Staff
  - John Nakoski, Chief, CQVB
  - Aida Rivera-Varona, Lead reviewer, CQVB
  - Hossein Hamzehee, Chief, SPLB
  - John Lai, Lead reviewer, SPLB

ACRS Subcommittee Presentation
SER/OI Chapter 17

Content of Chapter 17

- The following sections are related to quality assurance (QA):
  - Section 17.1, “Quality Assurance During Design,”
  - Section 17.2, “Quality Assurance During Construction and Operations,”
  - Section 17.3, “Quality Assurance Program Description,” and
  - Section 17.5, “Quality Assurance Program Description – Design Certification Early Site Permits, and New License Applicants.”
- These sections addresses the reliability assurance program (RAP) in the design phase and the Maintenance Rule program in the following sections:
  - Section 17.4, “Reliability Assurance Program During Design Phase,” and
  - Section 17.6, Maintenance Rule Program.”

ACRS Subcommittee Presentation
SER/OI Chapter 17

Regulations and Review Guidance

<u>Quality Assurance Requirements and Guidance</u>

- 10 CFR 52.79(a)(25)
- Appendix B to 10 CFR Part 50, “Quality Assurance Criteria for Nuclear Power Plants and Fuel Reprocessing Plants”
- Regulatory Guide 1.206, Section C.III.1, Chapter 17, Section C.III.17.5, “Quality Assurance Program Guidance,” Revision 0, June 2007
- NUREG-0800, Standard Review Plan, Section 17.5, “Quality Assurance Program Description – Design Certification, Early Site Permits, and New License Applicants,” Revision 0, March 2007
- Nuclear Energy Institute (NEI) 06-14, “Template for Quality Assurance Program Description,” April 2007

ACRS Subcommittee Presentation
SER/OI Chapter 17

Technical Topics of Interest

- There are essentially three QA programs incorporated by reference.
  - QA Program used by GEH for the ESBWR
  - ESP QA Manual
  - Dominion Nuclear Facility QA Program Description (DOM-QA-1), - existing Dominion's operational QAPD applied to activities performed prior to construction
- The applicant submitted a new QA program that will be applied during construction and operations.
  - North Anna Unit 3 Quality Assurance Description (DOM-QA-2) which is based on NEI 06-14.

ACRS Subcommittee Presentation
SER/OI Chapter 17

Technical Topics of Interest

- NEI 06-14
  - Provides a generic template for use by ESP and COL applicants to implement applicable QA requirements
  - Includes brackets that are filled with information related to each applicant (e.g., scope and organization)
  - Revision 4 was approved in April 2007
  - NEI submitted Revision 5 in May 2008
  - Staff is addressing generic issues identified during review of COL applications
    - Organization
    - Applicability of QA Reg Guides

ACRS Subcommittee Presentation
SER/OI Chapter 17

Technical Topics of Interest

- Two Open Items remain - NAPS Unit 3 QAPD organization description
  - Initial RAI requested a flowchart that delineates the organizational interfaces and interrelationships between the North Anna corporate and onsite QA organizations.
  - The applicant included Figures II.1-1 and II.1-2 to identify organizations for the construction and operations phases, respectively.
  - However, the NRC staff is currently reviewing NEI 06-14 that the applicant used to develop the QAPD and is evaluating the extent of information that the organizational section of the QAPD needs to include.
  - This revision to NEI 06-14 will result in changes to the organizational description contained in the QAPD.

ACRS Subcommittee Presentation
SER/OI Chapter 17

Conclusions

- The NRC staff used the requirements of Appendix B to 10 CFR Part 50 and the guidance in SRP Section 17.5 for evaluating the acceptability of North Anna 3 COL FSAR supplemental information Items 17.5-1, 17.5-2, and 17.5-3 in Section 17.5 of the COL FSAR.
- The staff evaluated the QAPD that will be applied to activities during design implementation, construction, and operations and arrived at the following conclusions:
  - The QAPD provides adequate guidance for the applicant to apply a QAPD to activities and items that are important to safety.
  - The QAPD complies with the acceptance criteria in SRP Section 17.5 and with the commitments to applicable regulatory guidance, with the exception to items as addressed in Open Items 17.5-4 and 17.5-5.
  - The QAPD provides adequate guidance for the applicant to establish controls that, when properly implemented, comply with 10 CFR Parts 21, and 10 CFR 50.55(e).

There are no post COL activities related to QA program.

ACRS Subcommittee Presentation
SER/OI Chapter 17

Regulatory and Review Guidance

Section 17.4, "Reliability Assurance Program (RAP) During Design Phase"

- Item E of SECY-95-132
  - Each design-specific rulemaking incorporates a requirement to provide a RAP. This becomes part of an application for a COL that references a certified design.
  - COL applicant's D-RAP will be reviewed and approved by the staff at the time the COL is issued.
  - The staff will verify implementation of the D-RAP with ITAAC process as well as inspections and audits during detailed design, procurement, fabrication, construction, and preoperational testing prior to fuel load.
  - Operational phase of RAP will be incorporated into existing programs.
- Regulatory Guide 1.206 Section C.III.1, Chapter 17, Section C.I.17.4, " Reliability Assurance Program Guidance", June 2007
- Standard Review Plan, Section 17.4, "Reliability Assurance Program", March 2007

ACRS Subcommittee Presentation
SER/OI Chapter 17

Technical Topics of Interest

- The RAP applies to the various structures, systems, and components (SSCs) in the plant that are identified as risk-significant (or significant contributors to plant safety).
- The applicant will confirm that a report containing the list of risk-significant SSCs has been generated. The reliability of each as-built risk-significant SSC is verified to be consistent with the reliability assumed in the ESBWR design PRA.

ACRS Subcommittee Presentation
SER/OI Chapter 17

Post COL Activity

- STD COL 17.4-1-H
  - The applicant has committed to implement a process for integrating reliability assurance activities for risk-significant SSCs into operational programs (e.g., Maintenance Rule, surveillance testing, maintenance programs and QA) to meet the objectives of the RAP during plant operation.

ACRS Subcommittee Presentation
SER/OI Chapter 17

Conclusions

- The SER on the ESBWR DC is not yet complete. The staff will update Section 17.4 of this SER to reflect the final disposition of the DC application.

- The relevant information presented in the COL FSAR is acceptable and meets NRC regulatory requirements.

ACRS Subcommittee Presentation
SER/OI Chapter 17

Regulations and Review Guidance

Section 17.6, "Maintenance Rule Program"

- Regulatory Requirement
  - 10 CFR 52.79(a)(15) and 10 CFR 50.65
- Regulatory Guidance
  - NUMARC 93-01, "Industry Guidance for Monitoring the Effectiveness of Maintenance at Nuclear Power Plants", as endorsed by RG 1.160.
  - For 50.65(a) (4), addressed in revision to Section 11 of NUMARC 93-01, as endorsed by RG 1.182.
  - Regulatory Guide 1.206, Section C.III.1, Chapter 17, Section C.I.17.6, "Description of the Applicant's Program for Implementation of 10 CFR 50.56, the Maintenance Rule", June, 2007
  - Standard Review Plan, Section 17.6, "Maintenance Rule", August 2007

ACRS Subcommittee Presentation
SER/OI Chapter 17

Technical Topics of Interest

- COL Action Item:
  - STD COL 17.4-1-H
    - COL applicant provides Maintenance Rule program.
- Supplemental Information
  - STD SUP 17.6-1
    - Numbering changed from “17.X” to “17.6” when IBR NEI 07-02A
  - STD SUP 17.6-3
    - Replace “(DRAP – see FSAR Section 17.Y)” to (See Section 17.4) when IBR NEI 07-02A
  - STD SUP 17.6-2
    - Revised texts in Section 17.6.3

ACRS Subcommittee Presentation
SER/OI Chapter 17

Post COL Activity

- STD COL 17.4-1-H
  - The applicant has committed to implement a process for integrating reliability assurance activities for risk-significant SSCs into operational programs (e.g., Maintenance Rule, surveillance testing, maintenance programs and QA) to meet the objectives of the RAP during plant operation.
  - This is the same as the Post COL Activity in Section 17.4

ACRS Subcommittee Presentation
SER/OI Chapter 17

Conclusions

- The relevant information presented in the COL FSAR is acceptable and meets NRC regulatory requirements.

ACRS Subcommittee Presentation
SER/OI Chapter 17

Discussion/Committee Questions

Presentation to the ACRS Subcommittee

North Anna Unit 3 COL Application Review

SER/OI Chapter 18
Human Factors Engineering

June 18, 2009

ACRS Subcommittee Presentation
SER/OI Chapter 18

Staff Review Team

- Project Managers
  - Thomas Kevern, Lead PM, DNRL/NGE1

- Technical Staff
  - Michael Junge, Chief, COLP
  - Paul Pieringer, Lead Reviewer, COLP

ACRS Subcommittee Presentation
SER/OI Chapter 18

Content of Chapter 18

- FSAR Chapter 18 incorporates by reference ESBWR DCD Chapter 18.
  - No Open Items
  - No Confirmatory Items

- Supplemental information is provided in Section 18.13, Human Performance Monitoring:
  - STD COL 18.13-1-H.

ACRS Subcommittee Presentation
SER/OI Chapter 18

Supplemental Information and Conclusion

STD COL 18.13-1-H: Milestone for Human Performance Monitoring (HPM) implementation

- The DCD specifies that a milestone for the implementation of the HPM program would be provided.
- The applicant committed to implement the HPM program prior to the beginning of the first licensed-operator training class.
- The applicant committed to begin collecting performance information at the earliest opportunity subsequent to completing the HFE design verification and validation. The proposed milestone is acceptable.

ACRS Subcommittee Presentation
SER/OI Chapter 18

Discussion/Committee Questions

Presentation to the ACRS Subcommittee

North Anna Unit 3 COL Application Review

North Anna-3 SER/OI Chapter 19
Probabilistic Risk Assessment and Severe Accidents

June 18, 2009

ACRS Subcommittee Presentation
SER/OI Chapter 19

Staff Review Team

- Project Managers
  - Thomas Kevern, Lead PM, DNRL/NGE1
  - Michael Eudy, Chapter PM, DNRL/NGE1

- Technical Staff
  - Hossein Hamzehee, Chief, PRA Branch
  - Mark Caruso, Lead Reviewer, Level 1PRA
  - Edward Fuller, Lead Reviewer, Level 2 PRA & Severe Accidents
  - John Lai, Lead Reviewer, External Events
  - Todd Hilsmeier, Reviewer, Level 2 PRA & Severe Accidents
  - Jim Xu, Acting Chief, SEB2

ACRS Subcommittee Presentation
SER/OI Chapter 19

Content of Chapter 19

- Staff agrees with applicant's description of the scope and content of Chapter 19 of the COL application.

ACRS Subcommittee Presentation
SER/OI Chapter 19

Regulations and Review Guidance

- 10 CFR 52.79(a)(46)
  - – describe plant-specific PRA and results
- 10CFR 52.79(d)(1)
  - - may reference design cert PRA and update to reflect site/design specific parameters and features
- 10 CFR 52.79(a)(17)
  - – show compliance with relevant TMI requirements
- 10 CFR 50.34(f)(i) – TMI Requirement
  - - Do a plant/site specific PRA to seek improvements in reliability of core and containment cooling capability
- NUREG-0800 Section 19.0 (SRP)
- Regulatory Guide 1.206
- Interim Staff Guidance COL/DC-ISG-03

ACRS Subcommittee Presentation
SER/OI Chapter 19

Technical Topics of Interest
Plant/Site Specific PRA

- Application incorporated ESBWR PRA by reference and stated site-specific and plant-specific design features and design parameters were enveloped in ESBWR PRA.
- RAIs issued to obtain supporting evaluation.
- Staff reviewed evaluation and agrees with conclusion.
- Applicant incorporated evaluation and results into FSAR (Appendix 19AA).

ACRS Subcommittee Presentation
SER/OI Chapter 19

Technical Topics of Interest
Severe Accident Evaluation

- ESBWR Severe Accident Evaluation incorporated by reference with no departures.

- Accident management
  - The staff's ongoing safety evaluation of the ESBWR DCD has an open item relating to providing the technical basis for accident management. Resolution of this item may lead to a revision to the North Anna COL application to ensure that procedures developed and implemented according to the ESBWR HFE engineering procedures development implementation plan (NEDO-33274, Rev. 2) include the technical basis.
  - ITAAC 7 in Table 3.3-1 of the ESBWR DCD Tier 1 is being modified to assure that the severe accident management technical basis will be incorporated into the procedures before plant operation.
  - Conformance with the ESBWR HFE training implementation plan (NEDO-33275, Rev. 1) will be assured in the same manner.

ACRS Subcommittee Presentation
North Anna-3 SER/OI Chapter 19

Open Items

- None

ACRS Subcommittee Presentation
SER/OI Chapter 19

Post COL activities

- STD COL 19.2.6-1-H

  As-built SSC HCLPF will be compared to those assumed in the ESBWR seismic margin analysis. Deviations from the HCLPF values or other assumptions in the seismic margins evaluation will be analyzed to determine if any new vulnerabilities have been introduced. A minimum HCLPF value of 1.67*SSE will be met for the SSCs. This comparison and analysis will be completed prior to fuel load.

ACRS Subcommittee Presentation
SER/OI Chapter 19

Conclusions

- Applicant has addressed NRC requirements adequately.
- Staff will update the SER to reflect final disposition of the ESBWR Design Certification Application.

ACRS Subcommittee Presentation
SER/OI Chapter 19

Discussion/Committee Questions