PMNorthAnna3COLPEmails Resource

From: Jessie, Janelle
Sent: Tuesday, June 23, 2009 2:13 PM
To: Regina.Borsh@dom.com
Cc: NorthAnna3COL Resource
Subject: FW: ACRS July 21 & 22 & Aug 21 - North Anna SER/OI Presentations
Attachments: ACRS North Anna Staff Presentation - Chapter 01.ppt; ACRS North Anna Staff Presentation - Chapter 06.ppt; ACRS North Anna Staff Presentation - Chapter 08.ppt; ACRS North Anna Staff Presentation - Chapter 15.ppt; ACRS Agenda NorthAnna 0618FinalNames.doc

Importance: High

FYI

Just to give you an idea of the allotted time for the presentations

Janelle

x6775

From: Kevern, Thomas
Sent: Monday, June 22, 2009 4:45 PM
To: Nakoski, John; Junge, Michael; Snodderly, Michael; Ray, Neil; Harvey, Brad; Raione, Richard; Karas, Rebecca; Frye, Timothy; Segala, John; Radlinski, Robert; Scarbrough, Thomas; Dixon-Herrity, Jennifer; Bloom, Steven; Eudy, Michael; Jessie, Janelle; Berrios, Ilka; Cook, Christopher; Williams, Kevin; Kowal, Mark; Barss, Dan; Lauron, Carolyn; Downey, Steven; Wheeler, Larry; Vettori, Robert; Wang, Weidong; Wang, Weijun; Dehmel, Jean-Claude; Hinson, Charles; Reddy, Devender; Pelton, Rick; Kellum, Jim; Harbuck, Craig; Musico, Bruce; Thompson, Jenise; Talbot, Frank
Cc: Cruz, Jeffrey; Montague, Michael; Cubbage, Amy; NRO_Division_Directors; Hamzehee, Hossein; Jung, Ian; Donoghue, Joseph; Jenkins, Ronaldo; Xu, Jim; Hatchett, Gregory; Williamson, Alicia; Koenick, Stephen; Laura, Richard; NRO_Deputy_Division_Directors; Kirkwood, Sara; Carpentier, Marcia
Subject: ACRS July 21 & 22 & Aug 21 - North Anna SER/OI Presentations
Importance: High

Branch Chiefs & Lead Reviewers:

July 21: At the ACRS subcommittee meeting, we will present SER/OI chapters 5, 9, 10, 11, & 12.

July 22: At the ACRS subcommittee meeting, we will present SER/OI chapters 13, & 16.

August 21: At the ACRS subcommittee meeting, we will present the remaining SER/OI chapters 2, 3, & 14.

Each chapter is to be presented by the applicable lead technical reviewer(s) and/or branch chief(s) with support by project managers. Enclosed, to assist in your preparation, are 1) selected staff presentations and 2) final agenda for the June 18th ACRS subcommittee meeting. Please use this presentation template for your respective presentations.

Staff presentation time should be the following:
Ch 5: ~15 minutes; Ch 9: ~30 minutes; Ch 10: ~15 minutes
Ch 11: ~15 minutes; Ch 12: ~15-plus minutes
Ch 13: ~30 minutes (~15 minutes 13.1, .2, .4, .5; ~15 minutes 13.3); Ch 16: ~30 minutes
Chapter 2: ~ 60 minutes (~20 minutes 2.1, .2, .3; ~20 minutes 2.4; ~20 minutes 2.5); Chapter 3: ~45 minutes;

Chapter 14: ~45 minutes (~20 14.2; ~20 14.3)

Preparation schedule:

- **Complete draft presentations - July 6th**
- **Presentation dry runs - week of July 6th**
- **Revise/finalize presentations - week of July 13th**
- **ACRS - July 21 & 22**

More to follow. Please contact me with questions.

Tom

Hearing Identifier: NorthAnna3_Public_EX
Email Number: 767

Mail Envelope Properties (CEEA97CC21430049B821E684512F6E5ECA493308CA)

Subject: FW: ACRS July 21 & 22 & Aug 21 - North Anna SER/OI Presentations
Sent Date: 6/23/2009 2:12:51 PM
Received Date: 6/23/2009 2:12:57 PM
From: Jessie, Janelle

Created By: Janelle.Jessie@nrc.gov

Recipients:
"NorthAnna3COL Resource" <NorthAnna3COL.Resource@nrc.gov>
Tracking Status: None
"Regina.Borsh@dom.com" <Regina.Borsh@dom.com>
Tracking Status: None

Post Office: HQCLSTR01.nrc.gov

Files	**Size**	**Date & Time**
MESSAGE	2688	6/23/2009 2:12:57 PM
ACRS North Anna Staff Presentation - Chapter 01.ppt	319482	
ACRS North Anna Staff Presentation - Chapter 06.ppt	334842	
ACRS North Anna Staff Presentation - Chapter 08.ppt	551418	
ACRS North Anna Staff Presentation - Chapter 15.ppt	329210	
ACRS Agenda NorthAnna 0618FinalNames.doc	51194	

Options
Priority: High
Return Notification: No
Reply Requested: No
Sensitivity: Normal
Expiration Date:
Recipients Received:

Presentation to the ACRS Subcommittee

North Anna Unit 3 COL Application Review

SER/OI Chapter 1
Introduction and General Description

June 18, 2009

ACRS Subcommittee Presentation
SER/OI Chapter 1

Staff Review Team

- Project Managers
  - Jeffrey Cruz, Chief, NGE1
  - Thomas Kevern, Lead PM, DNRL/NGE1
  - Janelle Jessie, Chapter PM, DNRL, NGE1
  - Stephen Koenick, Technical Reviewer, DNRL/NO

ACRS Subcommittee Presentation
SER/OI Chapter 1

Presentation Outline

- Content of COL application
  - Incorporated by Reference
  - COL items (STD and/or NAPS)
  - Conceptual Design Information (CDI)
  - Information related to Early Site Permit (ESP)
  - Other Supplemental Information
- Regulations and Review Guidance
- Technical Topics of Interest
- RAIs / Open Items
- Conclusions
- Post COL activities
- Discussion / Committee questions

ACRS Subcommittee Presentation
SER/OI Chapter 1

Regulations and Review Guidance

- 10 CFR Part 52, Subpart C
  - 10 CFR 52.79
  - 10 CFR 52.83 – Finality (DC and ESP)
    - Open Item 1-1 (DC)
- NUREG 0800 (SRP)
- Regulatory Guide 1.206
- Design Centered Review Approach
  - RCOL, SCOL

ACRS Subcommittee Presentation
SER/OI Chapter 1

Staff Evaluation

- Part 1 SER Appendix A
- **Part 2 SER (19 Chapters)**
- Part 3 SEIS
- Part 4 SER Chapter 16
- Part 5 SER Chapter 13
- Part 6 Not used
- Part 7 SER (19 Chapters)
- Part 8 SER Chapter 13
- Part 9 Not used
- Part 10 SER Chapter 14

ACRS Subcommittee Presentation
SER/OI Chapter 1

Approach to SER

- SER Format
  - Introduction
  - Summary of Application
  - Regulatory Basis
  - Technical Evaluation
  - Post Combined License Activities
  - Conclusions

- Template Language

ACRS Subcommittee Presentation
SER/OI Chapter 1

Review of FSAR Chapter 1

- General plant description
- Comparison with other Facilities
- Identification of agents and contractors
- Requirements for further technical information
- Material incorporated by reference
- Drawings and other detailed information

ACRS Subcommittee Presentation
SER/OI Chapter 1

Review of FSAR Chapter 1

- Interfaces with Standard Design
- Conformance with SRP and Applicability of Codes and Standards
- Summary of COL Items
- Technical resolutions of Task Action Plan Items, new Generic Issues, New Generic Safety Issues and Chernobyl Issues
- **Impact of Construction Activities on Units 1 and 2 (OI 1-2)**
- Response to TMI items
- Industry operating experience

ACRS Subcommittee Presentation
SER/OI Chapter 1

Other Regulatory Considerations

- Technical Qualifications
- **Nuclear Waste Policy Act (OI 1-03)**
- Consultation with DHS
- **Receipt, Possession, and Use of Source, Byproduct and SNM (OI 1-04)**

ACRS Subcommittee Presentation
SER/OI Chapter 1

SER OI/Post COL Activities

- Post COL Activity
  - STD COL 1.7-1-H: Final Design Configuration Confirmation

- Four Open Items

  1-01, 1-02, 1-03, 1-04

ACRS Subcommittee Presentation
SER/OI Chapter 1

Discussion/Committee Questions

Presentation to the ACRS Subcommittee

North Anna Unit 3 COL Application Review

SER/OI Chapter 6
Engineered Safety Features

June 18, 2009

ACRS Subcommittee Presentation
SER/OI Chapter 6

Staff Review Team

- Project Managers
  - Thomas Kevern, Lead PM, DNRL/NGE1
  - Michael Eudy, Chapter PM, DNRL/NGE1

- Technical Staff
  - Carolyn Lauron, Acting Chief, RSAC
  - Mike Snodderly, Chief, SBCV
  - Neil Ray, Acting Chief, CIB2
  - Jay Lee/Rao Tamara, Lead Reviewers, RSAC
  - George Georgiev, Lead Reviewer, CIB2
  - Syed I. Haider, Lead Reviewer, SBCV

ACRS Subcommittee Presentation
SER/OI Chapter 6

Technical Topics of Interest
6.2 Containment Systems

STD COL 6.2-1-H: Pipe Length from Containment to Inboard/Outboard Isolation Valve

- Isolation valves should be located as close to the containment as practical (GDCs 55, 56, 57)
- Pipe lengths not provided (Table 6.2-16…6.2-45)
- COL RAI 6.02.04-1
  - Piping design – GEH responsibility
- DCD RAI 6.2-157 S02
  - ESBWR DCD update
    - **Delete** COL 6.2-1-H
    - **Add** acceptance criteria for locating the isolation valves (DCD Tier 2, Section 6.2.4.2)
    - **Add** a new ITAAC (Table 2.15.1-2 Item 22)
- Revise FSAR
- Acceptable → COL RAI 6.02.04-2 → Confirmatory item

ACRS Subcommittee Presentation
SER/OI Chapter 6

6.2 Containment Systems (continued)

STD SUP 6.2-1: Inspections to Limit Debris

- Procedures for inspections to prevent debris inside containment

- Containment debris
  - LOCA, latent, foreign
  - Insulation, paint, concrete
  - Pump clogging

- Inspection procedures (RG 1.82)
  - Pool inspection
  - Drywell/wetwell inspections
  - Visual examination
  - Containment cleanliness program
  - Procedures for foreign & latent materials

ACRS Subcommittee Presentation
SER/OI Chapter 6

STD SUP 6.2-1: Inspections to Limit Debris (continued)

- COL RAI 6.02.01-1 → DCD RAI 6.2-173 S01
  - Suppression pool not credited post-LOCA
  - ESBWR DCD update
    - **State** that RG 1.82 is not applicable
    - **Delete** STD SUP 6.2-1
    - **Remove** references to cleanliness program
- **Revise** FSAR
- **Acceptable**
- COL RAI 6.02.01-1 → Confirmatory item

ACRS Subcommittee Presentation
SER/OI Chapter 6

Technical Topics of Interest

6.4 Control Room Habitability Systems

STD COL 6.4-1-A: CRHA Procedures and Training

- Regulatory requirements
  - NRC Generic Letter 2003-01
  - Generic Issue 83
- Develop and implement procedures and operator training for control room habitability
  - Sections 13.2 and 13.5
- Supplemental information is adequate
- **Acceptable**

ACRS Subcommittee Presentation
SER/OI Chapter 6

Technical Topics of Interest

6.4 Control Room Habitability Systems (continued)

NAPS COL 6.4-2-A: Toxic Gas Analysis

- The applicant made a commitment to identify potential site-specific toxic or hazardous materials that may affect control room habitability, in order to meet TMI Action Plan III.D.3.4 and GDC 19.

- Potential sources of hazardous materials
  - Off-site industrial facilities and transportation routes
  - Units 1, 2, and 3 on-site storage

- Applicant's evaluation (Section 2.2)
  - CRHA toxic gas concentrations **< Toxicity limits** (RG 1.78 and National Air Quality Standards)
  - **Safety-related toxic gas monitoring instrumentation is not required**.

ACRS Subcommittee Presentation
SER/OI Chapter 6

Technical Topics of Interest

6.4 Control Room Habitability Systems (Continued)

NAPS COL 6.4-2-A: Toxic Gas Analysis (Continued)

- Staff's evaluation of the technical adequacy of the applicant's toxic gas analysis for CRH (Section 6.4)
  - Staff Confirmatory Analyses
    - HABIT
    - Instantaneous release → vapor cloud → intake into CRHA
    - On-site N_2 and CO_2 storage acceptable (RG 1.78)
  - **Not complete**
    - Screening criteria at the CR intake (RAI 2.2.3-5)
  - **Any additional hazardous chemicals identified will be analyzed**

ACRS Subcommittee Presentation
SER/OI Chapter 6

Technical Topics of Interest

6.4 Control Room Habitability Systems (continued)

NAPS SUP 6.4-1: System Safety Evaluation

- Supplemental information to address the impact of a postulated DBA in Units 1/2 on the Unit 3 control room.

- Staff evaluation of the applicant's dose analysis
  - Confirmatory analysis (SER Section 2.3.4.4 & Chapter 15)
  - Audit

- Unit 3 control room dose from a postulated Unit 1/2 DBA
  - **Complies** with GDC 19
  - **Bounded** by the CR dose from a postulated **Unit 3 DBA**
    - Lower source term in Unit 1/2 DBA
    - Lower χ/Q in Unit 1/2 DBA
- Acceptable

ACRS Subcommittee Presentation
SER/OI Chapter 6

Technical Topics of Interest

6.6 PSI/ISI Program And Augmented Inspection Flow Accelerated Corrosion (FAC) Program

- Section 6.6 addressed Preservice and Inservice Inspection and Testing of Class 2 and 3 Components and Piping
  - STD COL 5.2-1-A – System Pressure Test is addressed in Chapter 5 of the COLA
  - STD COL 6.6-1-A – Plant Specific PSI/ISI program and Flow Accelerated Corrosion program
  - STD COL 6.6-2-A - NDE Accessibility Plan Description

ACRS Subcommittee Presentation
SER/OI Chapter 6

Technical Topics of Interest

6.6 PSI/ISI Program And Augmented Inspection Flow Accelerated Corrosion (FAC) Program

STD COL 6.6-1-A

- ISI program would conform to latest edition and addenda endorsed by 10 CFR 50.55a on a date 12 months prior to fuel load

- FAC Program follows the recommendations of EPRI NSAC-202L to identify susceptible components and PSI baseline will be performed prior to plant startup

- Accessibility for PSI/ISI affecting Class 2 and 3 components will be maintained as required by 10 CFR 50.55a(g)(3)

ACRS Subcommittee Presentation
SER/OI Chapter 6

6.6 PSI/ISI Program And Augmented Inspection Flow Accelerated Corrosion (FAC) Program

Post COL activities

- Section 6.6
  - PSI program will be implemented prior to initial plant startup
  - ISI program will be implemented prior to fuel load
  - FAC program will be implemented prior to fuel load

ACRS Subcommittee Presentation
SER/OI Chapter 6

Discussion/Committee Questions

Presentation to the ACRS Subcommittee

North Anna Unit 3 COL Application Review

SER/OI Chapter 8
ELECTRIC POWER

June 18, 2009

ACRS Subcommittee Presentation
SER/OI Chapter 8

Staff Review Team

- Project Managers
  - Thomas Kevern, Lead PM, DNRL/NGE1
  - Michael Eudy, Chapter PM, DNRL/NGE1

- Technical Staff
  - Amar Pal, Lead Reviewer, EEB
  - Ronaldo Jenkins, Branch Chief, EEB

ACRS Subcommittee Presentation
SER/OI Chapter 8

Content of Chapter 8

- FSAR Chapter 8 incorporates by reference ESBWR DCD Chapter 8. Supplemental information and COL information items are provided in Sections 8.1, 8.2, 8.3.1, and 8.3.2.

- 8.1 Introduction
  -NAPS SUP 8.1-1 – North Anna 3 connection to the utility grid

- 8.2 Offsite Power System
  -NAPS COL 8.2.4-1A – Transmission System Description
  -NAPS COL 8.2.4-2A - Switchyard Description
  -NAPS COL 8.2.4-3A – Normal Preferred Power
  -NAPS COL 8.2.4-4A – Alternate Preferred Power
  -NAPS COL 8.2.4-5A – Protective Relaying
  -NAPS COL 8.2.4-6A - Switchyard DC Power
  -NAPS COL 8.2.4-7A -Switchyard AC Power

ACRS Subcommittee Presentation
SER/OI Chapter 8

Content of Chapter 8

- 8.2 Offsite Power System (continued)
  -NAPS COL 8.2.4-8A -Switchyard Transformer Protection
  -NAPS COL 8.2.4-9A - Stability & Reliability of the Offsite Transmission Power System
  -NAPS COL 8.2.4-10A -Interface Requirements
  -NAPS SUP 8.2-2 - Testing and Inspection
  -NAPS SUP 8.2-3 – Failure Mode and Effects Analysis

- 8.3.1 AC Power Systems (Onsite)
  -NAPS COL 8A.2.3-1A – Cathodic Protection System
  -NAPS SUP 8.3-1 – Onsite Power Description

- 8.3.2 DC Power Systems (Onsite)
  -NAPS SUP 8.3-2 – Safety-related Station Batteries and Battery Chargers – Station Blackout

ACRS Subcommittee Presentation
SER/OI Chapter 8

Regulations and Review Guidance

- GDCs: 5, 17, and 18
- 10 CFR 50.63 and 50.65
- Primary SRP Sections: 8.1, 8.2, 8.3.1, 8.3.2, and 8.4
- Regulatory Guides: 1.32, 1.118, 1.206, 1.160, and 1.182.
- Other guidance: BTP 8-3 and 8-6

NAPS COL 8.2.4-1-A Figure 8.2-201 500/230 kV Switchyard Single-Line Diagram

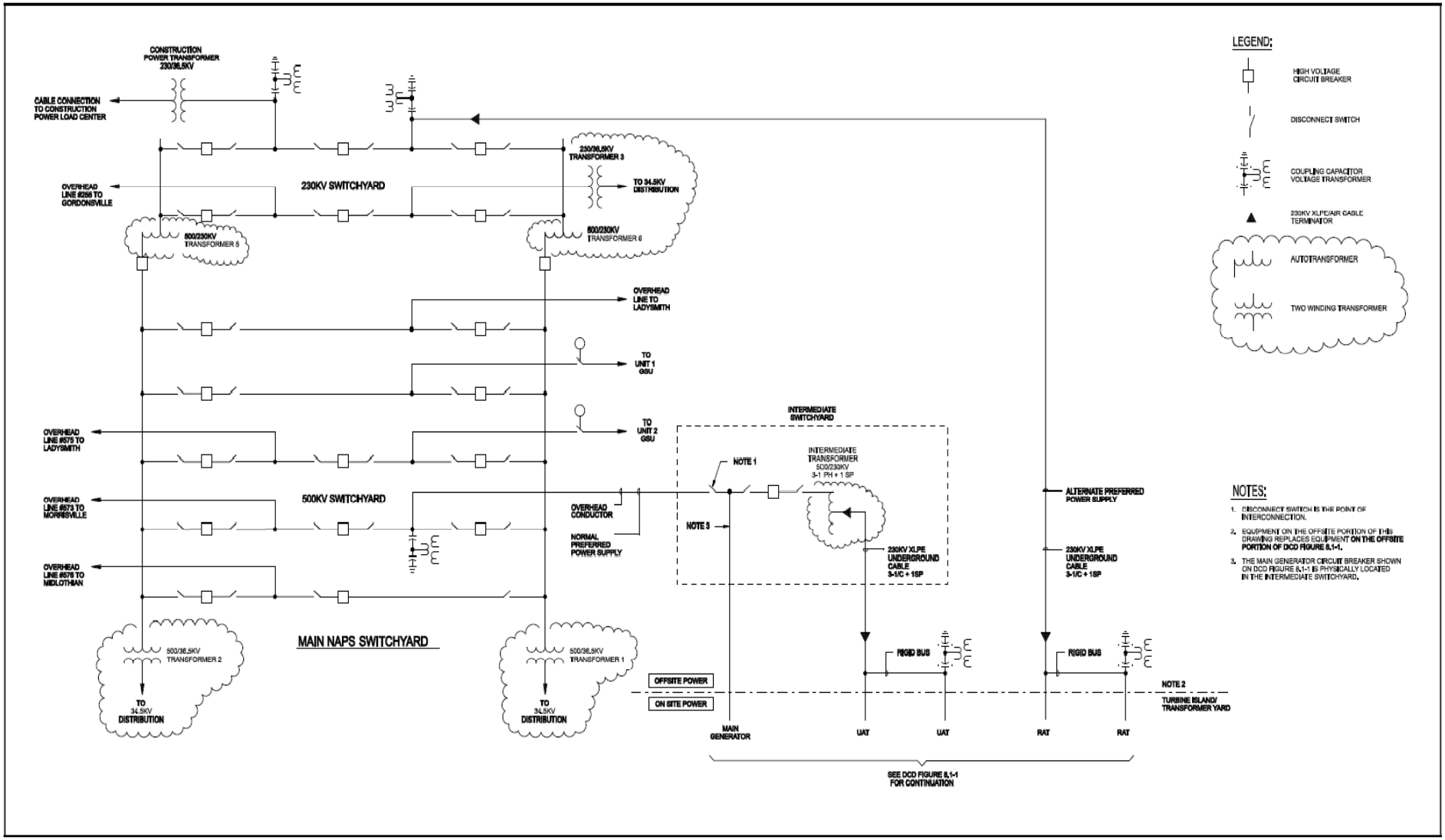

ACRS Subcommittee Presentation
SER/OI Chapter 8

Technical Topics of Interest

- <u>Section 8.2</u>

  - North Anna 3 switchyard is shared with existing Units 1 and 2.

  GDC 5 is satisfied with respect to sharing of switchyard components because Unit 3 UATs and RATs are not shared with existing units connected to the same grid and the capacity of the offsite power system is large compared to minimal safety-related loads.

  - Insulation degradation of underground power cables due to moisture. Metallic sheathed cables are used. Additionally, periodic inspection of manholes for water accumulation.

- <u>Section 8.3</u>

  - Incorporates by reference ESBWR DCD with no departures or supplements for SBO requirements.

  - Training and procedures to mitigate an SBO are site specific and are provided by the applicant.

ACRS Subcommittee Presentation
SER/OI Chapter 8

Conclusion

- Sections 8.1 - Introduction

  The applicant has adequately addressed supplemental information regarding North Anna 3 connection to the 500/230 kV switchyard through the unit main step-up transformer and an intermediate switchyard.

- Section 8.2 – Offsite Power System

  The applicant has adequately addressed COL information items NAPS COL 8.2.4-1-A thru 8.2.4-10-A involving the design details of the plant site switchyard and its interface with the local transmission grid and NAPS SUP 8.2-2 and 8.2-3 involving testing and inspection of switchyard components and failure modes and effects analysis. The staff concludes that the requirements of GDC 5, 17 and 18 and 10 CFR 50.65 are satisfied for this section.

ACRS Subcommittee Presentation
SER/OI Chapter 8

Conclusion

- Section 8.3.1 – AC Power System (Onsite)

  The applicant has adequately addressed the North Anna 3 COL item involving cathodic protection systems and supplemental information involving the transmission system and its electrical connection to the plant. The staff concludes that GDC 17 is satisfied for this section.

- Section 8.3.2 – DC System (Onsite)

  The applicant has adequately addressed North Anna 3 supplemental information pertaining to training and procedures to mitigate an SBO event. The staff concludes that 10 CFR 50.63 is satisfied for this section.

- Open Items- None
- Post COL Activities- None

ACRS Subcommittee Presentation
SER/OI Chapter 8

Discussion/Committee Questions

Presentation to the ACRS Subcommittee

North Anna Unit 3 COL Application Review

SER/OI Chapter 15
Safety Analyses

June 18, 2009

ACRS Subcommittee Presentation
SER/OI Chapter 15

Staff Review Team

- Project Managers
  - Thomas Kevern, Lead PM, DNRL/NGE1
  - Michael Eudy, Chapter PM, DNRL/NGE1

- Technical Staff
  - Carolyn Lauron, Acting Chief, RSAC
  - Joseph Donoghue, Chief, SRSB
  - Jay Lee, Lead Reviewer, RSAC
  - George Thomas, Lead Reviewer, SRSB

ACRS Subcommittee Presentation
SER/OI Chapter 15

Content of Chapter 15

- The North Anna FSAR, Revision 1, Chapter 15, “Safety Analyses,” incorporated by reference:
  - ESBWR DCD, Revision 5, Chapter 15, “Safety Analyses,” and
  - North Anna Site Safety Analysis Report (SSAR) in Early Site Permit (ESP) Application, Revision 9, Chapter 15, “Accident Analyses,” except that information related to the ESBWR in the SSAR is replaced by the ESBWR DCD, Revision 5, Chapter 15.
- There are no COL information items, open items, post COL activity items, or confirmatory items (outside of the ESBWR DCD)

ACRS Subcommittee Presentation
SER/OI Chapter 15

Scope of Presentation

- Radiological consequence analyses of the postulated design basis accidents at the proposed North Anna, Unit 3 site (Chapter 15, Section 15.4).

- All other remaining parts of Chapter 15 are incorporated by reference in its entirety.

ACRS Subcommittee Presentation
SER/OI Chapter 15

Regulations and Review Guidance

- 10 CFR 52.79(a)(1), “radiological consequence evaluation factors,”
- 10 CFR 100.21, “Non-seismic siting criteria,”
- GDC 19, “Control room,”
- NUREG-0800, Section 15.0.3, “Design Basis Accident Radiological Consequence Analyses for advanced light Water Reactors,” and
- Regulatory Guide 1.206, “Combined License Applications for Nuclear Power Plants.”

ACRS Subcommittee Presentation
SER/OI Chapter 15

Regulations and Review Guidance (continued)

10 CFR 52.79(a)(1) for COL Application10 CFR 52.47(a)(2) for Design Certification Application

"The applicant shall perform an evaluation and analysis of the postulated fission product release….. to evaluate the offsite radiological consequences."

"The fission product release assumed for this evaluation should be based upon a major accident….. Such accidents have generally been assumed to result in substantial meltdown of the core with subsequent release into the containment of appreciable quantities of fission products." The fission product release assumed for this evaluation should be based upon a major accident"

- **The ESBWR design met this requirement with an hypothetical reactor site (no specific reactor site is associated with the ESBWR design.)**

ACRS Subcommittee Presentation
SER/OI Chapter 15

Regulatory Issue

- Does the ESBWR design provide adequate mitigation of radiological consequences in the event of a major reactor accident to protect public health and safety at the proposed North Anna site, as demonstrated by meeting the siting dose acceptance criteria specified in 10 CFR 100.21 and 10 CFR 52.79?

- 25 rem TEDE at exclusion area boundary, low population zone, and 5 rem TEDE in the control room.

ACRS Subcommittee Presentation
SER/OI Chapter 15

Technical Topics of Interest
Dose Calculations

$$CEDE = \sum_{i=1}^{N} (DCF_{CEDE})_i \sum_{j=1}^{T} (IAR)_{ij} (BR)_j (\chi / Q)_j$$

Radiation Dose = Dose Conversion Factors x ESBWR Source Terms x Breathing Rates x Atmospheric Dispersion Factors

•ESBWR used a set of hypothetical χ/Q values while North Anna used its site-specific χ/Q values

ACRS Subcommittee Presentation
SER/OI Chapter 15

Technical Topics of Interest
Dose Calculations

- Regulatory Guide 1.206, "Combined License Applications for Nuclear Power Plants,"
  - Regulatory Position C.III.1, "Information Needed for a Combined License Application Referencing a Certified Design," Section C.1.15.6.5, "Radiological Consequences."

"The COL applicant should show that site-specific short-term χ/Q values for the EAB, LPZ, and control room are within the χ/Q values assumed in the DCD."

ACRS Subcommittee Presentation
SER/OI Chapter 15

Conclusions

- The North Anna site-specific offsite and control room χ/Q values fall within those values used in the ESBWR DCD, Rev. 5 radiological consequence analyses for each of the DBA.

- Therefore, the North Anna site-specific offsite and control room total doses for each DBAs are lower than the ESBWR DCD, Revision 5 generic total doses for each DBA.

ACRS Subcommittee Presentation
SER/OI Chapter 15

Conclusions

- The ESBWR DCD, Revision 5, Chapter 15 radiological analyses show that the offsite and control room radiological consequences meet the regulatory dose acceptance criteria.
- Therefore, the North Anna demonstrated that the DBA offsite and control room radiological consequences also meet the regulatory dose acceptance criteria specified in 10 CFR 52.79 and 10 CFR 100.21.
- Conclusions are based on the information provided in the ESBWR DCD, Revision 5 and are subject to the future revisions of the ESBWR DCD to the final design certification.

ACRS Subcommittee Presentation
SER/OI Chapter 15

Discussion/Committee Questions

Advisory Committee on Reactor Safeguards
Meeting of the ESBWR Subcommittee on the NORTH ANNA COLA
Rockville, MD
June 18, 2009
Proposed Agenda

tem	Topic	Presenter(s)	Time
1	Opening Remarks and Objectives	**Dr. Michael L. Corradini, ACRS**	8:30 – 8:35 a.m.
2	Introductions	Tom Kevern, NRO	8:35 – 8:40 a.m.
3	Opening Comments	Gene Grecheck, Dominion	8:40 – 8:45 a.m.
4	**Introduction** a. FSAR Chapter 1 b. SER/OI Chapter 1	a. Gina Borsh, Tom Hicks, Dominion; Rick Wachowiak, GEH b. Janelle Jessie, NRO	8 :45 a.m
5	**I & C** a. FSAR Chapter 7 b. SER/OI Chapter 7	a. Gina Borsh, Tom Hicks, Dominion; Rick Wachowiak, GEH b. Tom Kevern, NRO	
6	Break		10:15- 10:30 a.m.
7	**Reactor** a. FSAR Chapter 4 b. SER/OI Chapter 4	a. Gina Borsh, Tom Hicks, Dominion; Rick Wachowiak, GEH b. Tom Kevern, Jim Gilmer, NRO	
8	**HFE** a. FSAR Chapter 18 b. SER/OI Chapter 18	a. Gina Borsh, Tom Hicks, Dominion; Rick Wachowiak, GEH b. Tom Kevern, Paul Pieringer, NRO	
9	**Engineered Safety Features** a. FSAR Chapter 6 b. SER/OI Chapter 6	a. Gina Borsh, Tom Hicks, Dominion; Rick Wachowiak, GEH b. Mike Eudy, Syed Haider, George Georgiev, NRO	
10	Lunch		12:00 – 1:00 p.m.
11	**Safety Analyses** a. FSAR Chapter 15 b. SER/OI Chapter 15	a. Gina Borsh, Tom Hicks, Dominion; Rick Wachowiak, GEH b. Mike Eudy, Jay Lee, NRO	1:00 p.m.
12	**Quality Assurance** a. FSAR Chapter 17 b. SER/OI Chapter 17	a. Gina Borsh, Tom Hicks, Dominion; Rick Wachowiak, GEH b. Mike Eudy, Aida Rivera, John Lai, NRO	
13	Break		3:00 – 3 :15 p.m.
14	**PRA** a. FSAR Chapter 19 b. SER/OI Chapter 19	a. Gina Borsh, Tom Hicks, Dominion; Rick Wachowiak, GEH b. Tom Kevern, Mark Caruso, Ed Fuller, NRO	
15	**Electric Power** a. FSAR Chapter 8 b. SER/OI Chapter 8	a. Gina Borsh, Tom Hicks, Dominion; Rick Wachowiak, GEH b. Mike Eudy, Amar Pal, NRO	
16	Answers to Committee Questions	Dominion (Via Bridge Line)	4:45 – 5:00 p.m.
17	Committee Discussion	**Dr. Corradini, ACRS**	5:00 p.m.
18	Adjourn		5:05 p.m.

Notes:
Presentation time should not exceed 50% of the total time allocated for a specific item. Number of copies of presentation materials to be provided to the ACRS - 50.