ArevaEPRDCPEm Resource

From: Pederson Ronda M (AREVA NP INC) [Ronda.Pederson@areva.com]
Sent: Tuesday, July 14, 2009 6:16 PM
To: Tesfaye, Getachew
Cc: BENNETT Kathy A (OFR) (AREVA NP INC); DELANO Karen V (AREVA NP INC); KOWALSKI David J (AREVA NP INC)
Subject: Response to U.S. EPR Design Certification Application RAI No. 174, FSAR Ch 9, Supplement 4
Attachments: RAI 174 Supplement 4 Response US EPR DC.pdf

Getachew,

AREVA NP Inc. provided responses to 8 of the 49 questions of RAI No. 174 on February 27, 2009. Supplement 1 response to RAI No. 174 was sent on March 13, 2009 to address 4 of the remaining questions. Supplement 2 response to RAI No. 174 was sent on April 3, 2009 to address 11 of the remaining questions. Supplement 3 response to RAI No. 174 was sent on May 20, 2009 to address 14 of the remaining questions.

The attached file, "RAI 174 Supplement 4 Response US EPR DC.pdf" provides technically correct and complete responses to 11 of the remaining 12 questions, as committed.

Appended to this file are affected pages of the U.S. EPR Final Safety Analysis Report in redline-strikeout format which supports the response to RAI 174 Questions 09.02.02-36, 09.02.02-39, 09.02.02-42, 09.02.02-45, 09.02.02-47, 09.02.02-51, 09.02.02-52, 09.02.02-54 and 09.02.02-55.

The following table indicates the respective pages in the response document, "RAI 174 Supplement 4 Response US EPR DC.pdf," that contain AREVA NP's response to the subject questions.

Question #	Start Page	End Page
RAI 174 — 09.02.02-35	2	2
RAI 174 — 09.02.02-36	3	4
RAI 174 — 09.02.02-39 (Parts f and g)	5	6
RAI 174 — 09.02.02-42	7	7
RAI 174 — 09.02.02-45	8	9
RAI 174 — 09.02.02-46	10	11
RAI 174 — 09.02.02-47	12	12
RAI 174 — 09.02.02-51	13	14
RAI 174 — 09.02.02-52	15	15
RAI 174 — 09.02.02-54	16	18
RAI 174 — 09.02.02-55	19	20

Since a response to the remaining question remains in process, a revised schedule is provided in this email. The schedule for a technically correct and complete response to the remaining question has been changed as provided below:

Question #	Response Date
RAI 174 — 09.02.02-53	August 28, 2009

Sincerely,

Ronda Pederson
ronda.pederson@areva.com
Licensing Manager, U.S. EPR Design Certification
AREVA NP Inc.
An AREVA and Siemens company
3315 Old Forest Road
Lynchburg, VA 24506-0935
Phone: 434-832-3694
Cell: 434-841-8788

From: WELLS Russell D (AREVA NP INC)
Sent: Wednesday, May 20, 2009 3:03 PM
To: 'Getachew Tesfaye'
Cc: Pederson Ronda M (AREVA NP INC); BENNETT Kathy A (OFR) (AREVA NP INC); DELANO Karen V (AREVA NP INC)
Subject: Response to U.S. EPR Design Certification Application RAI No. 174, FSAR Ch 9, Supplement 3

Getachew,

AREVA NP Inc. provided responses to 8 of the 49 questions of RAI No. 174 on February 27, 2009. Supplement 1 response to RAI No. 174 was sent on March 13, 2009 to address 4 of the remaining 41 questions. Supplement 2 response to RAI No. 174 was sent on April 3, 2009 to address 11 of the remaining 37 questions.

The attached file, "RAI 174 Supplement 3 Response US EPR DC.pdf" provides technically correct and complete responses to 14 of the remaining questions, as committed.

Appended to this file are affected pages of the U.S. EPR Final Safety Analysis Report in redline-strikeout format which supports the response to RAI 174 Questions 09.02.02-9, 09.02.02-12, 09.02.02-28, 09.02.02-29, 09.02.02-31, 09.02.02-32, 09.02.02-37, and 09.02.02-44.

The following table indicates the respective pages in the response document, "RAI 174 Supplement 3 Response US EPR DC.pdf," that contain AREVA NP's response to the subject questions.

Question #	Start Page	End Page
RAI 174 — 09.02.02-7	2	2
RAI 174 — 09.02.02-8	3	3
RAI 174 — 09.02.02-9	4	5
RAI 174 — 09.02.02-12 (Parts 6, 7 and 8)	6	10
RAI 174 — 09.02.02-20	11	12
RAI 174 — 09.02.02-28	13	14
RAI 174 — 09.02.02-29	15	16
RAI 174 — 09.02.02-31	17	21
RAI 174 — 09.02.02-32	22	26
RAI 174 — 09.02.02-37	27	27
RAI 174 — 09.02.02-38	28	28
RAI 174 — 09.02.02-43	29	29
RAI 174 — 09.02.02-44	30	30
RAI 174 — 09.02.02-48	31	31

Since responses to the remaining questions remain in process, a revised schedule is provided in this email.

The schedule for technically correct and complete responses to the remaining questions has been changed as provided below:

Question #	Response Date
RAI 174 — 09.02.02-35	July 14, 2009
RAI 174 — 09.02.02-36	July 14, 2009
RAI 174 — 09.02.02-39 (Parts f and g)	July 14, 2009
RAI 174 — 09.02.02-42	July 14, 2009
RAI 174 — 09.02.02-45	July 14, 2009
RAI 174 — 09.02.02-46	July 14, 2009
RAI 174 — 09.02.02-47	July 14, 2009
RAI 174 — 09.02.02-51	July 14, 2009
RAI 174 — 09.02.02-52	July 14, 2009
RAI 174 — 09.02.02-53	July 14, 2009
RAI 174 — 09.02.02-54	July 14, 2009
RAI 174 — 09.02.02-55	July 14, 2009

(Russ Wells on behalf of)
Ronda Pederson
ronda.pederson@areva.com
Licensing Manager, U.S. EPR Design Certification
New Plants Deployment
AREVA NP, Inc.
An AREVA and Siemens company
3315 Old Forest Road
Lynchburg, VA 24506-0935
Phone: 434-832-3694
Cell: 434-841-8788

From: Pederson Ronda M (AREVA NP INC)
Sent: Friday, April 03, 2009 5:08 PM
To: 'Getachew Tesfaye'
Cc: KOWALSKI David J (AREVA NP INC); BENNETT Kathy A (OFR) (AREVA NP INC); DELANO Karen V (AREVA NP INC)
Subject: Response to U.S. EPR Design Certification Application RAI No. 174, Supplement 2

Getachew,

AREVA NP Inc. provided responses to 8 of the 49 questions of RAI No. 174 on February 27, 2009. Supplement 1 response to RAI No. 174 was sent on March 13, 2009 to address 4 of the remaining questions.

The attached file, "RAI 174 Supplement 2 Response US EPR DC.pdf" provides technically correct and complete responses to 11 of the remaining 37 questions, as committed.

Appended to this file are affected pages of the U.S. EPR Final Safety Analysis Report in redline-strikeout format which supports the response to RAI 174 Questions 09.02.02-11, 09.02.02-16, 09.02.02-18, 09.02.02-19, 09.02.02-21, 09.02.02-23, 09.02.02-24, 09.02.02-25, 09.02.02-30 and 09.02.02-34.

The following table indicates the respective pages in the response document, "RAI 174 Supplement 2 Response US EPR DC.pdf," that contain AREVA NP's response to the subject questions.

Question #	Start Page	End Page

RAI 174 — 09.02.02-11	2	2
RAI 174 — 09.02.02-16	3	5
RAI 174 — 09.02.02-18	6	8
RAI 174 — 09.02.02-19	9	12
RAI 174 — 09.02.02-21	13	14
RAI 174 — 09.02.02-22	15	16
RAI 174 — 09.02.02-23	17	18
RAI 174 — 09.02.02-24	19	19
RAI 174 — 09.02.02-25	20	20
RAI 174 — 09.02.02-30	21	22
RAI 174 — 09.02.02-34	23	24

The schedule for a technically correct and complete response to the remaining questions is unchanged and provided below.

Question #	**Response Date**
RAI 174 — 09.02.02-7	May 20, 2009
RAI 174 — 09.02.02-8	May 20, 2009
RAI 174 — 09.02.02-9	May 20, 2009
RAI 174 — 09.02.02-12 (Parts 6, 7 and 8)	May 20, 2009
RAI 174 — 09.02.02-20	May 20, 2009
RAI 174 — 09.02.02-28	May 20, 2009
RAI 174 — 09.02.02-29	May 20, 2009
RAI 174 — 09.02.02-31	May 20, 2009
RAI 174 — 09.02.02-32	May 20, 2009
RAI 174 — 09.02.02-35	May 20, 2009
RAI 174 — 09.02.02-36	May 20, 2009
RAI 174 — 09.02.02-37	May 20, 2009
RAI 174 — 09.02.02-38	May 20, 2009
RAI 174 — 09.02.02-39 (Parts f and g)	May 20, 2009
RAI 174 — 09.02.02-42	May 20, 2009
RAI 174 — 09.02.02-43	May 20, 2009
RAI 174 — 09.02.02-44	May 20, 2009
RAI 174 — 09.02.02-45	May 20, 2009
RAI 174 — 09.02.02-46	May 20, 2009
RAI 174 — 09.02.02-47	May 20, 2009
RAI 174 — 09.02.02-48	May 20, 2009
RAI 174 — 09.02.02-51	May 20, 2009
RAI 174 — 09.02.02-52	May 20, 2009
RAI 174 — 09.02.02-53	May 20, 2009
RAI 174 — 09.02.02-54	May 20, 2009
RAI 174 — 09.02.02-55	May 20, 2009

Sincerely,

Ronda Pederson
ronda.pederson@areva.com
Licensing Manager, U.S. EPR Design Certification
AREVA NP Inc.
An AREVA and Siemens company
3315 Old Forest Road
Lynchburg, VA 24506-0935
Phone: 434-832-3694
Cell: 434-841-8788

From: Pederson Ronda M (AREVA NP INC)
Sent: Friday, March 13, 2009 4:56 PM
To: 'Getachew Tesfaye'
Cc: KOWALSKI David J (AREVA NP INC); DELANO Karen V (AREVA NP INC); BENNETT Kathy A (OFR) (AREVA NP INC)
Subject: Response to U.S. EPR Design Certification Application RAI No. 174, Supplement 1

Getachew,

AREVA NP Inc. provided responses to 8 of the 49 questions of RAI No. 174 on February 27, 2009. The attached file, "RAI 174 Supplement 1 Response US EPR DC.pdf" provides technically correct and complete responses to 4 of the remaining 41 questions, as committed.

The following table indicates the respective pages in the response document, "RAI 174 Supplement 1 Response US EPR DC.pdf," that contain AREVA NP's response to the subject questions.

Question #	Start Page	End Page
RAI 174 — 09.02.02-39 (Parts a though e)	2	3
RAI 174 — 09.02.02-40	4	4
RAI 174 — 09.02.02-41	5	5
RAI 174 — 09.02.02-49	6	6
RAI 174 — 09.02.02-50	7	7

The schedule for a technically correct and complete response to the remaining questions is unchanged and provided below.

Question #	Response Date
RAI 174 — 09.02.02-7	May 20, 2009
RAI 174 — 09.02.02-8	May 20, 2009
RAI 174 — 09.02.02-9	May 20, 2009
RAI 174 — 09.02.02-11	April 3, 2009
RAI 174 — 09.02.02-12 (Parts 6, 7 and 8)	May 20, 2009
RAI 174 — 09.02.02-16	April 3, 2009
RAI 174 — 09.02.02-18	April 3, 2009
RAI 174 — 09.02.02-19	May 20, 2009
RAI 174 — 09.02.02-20	May 20, 2009
RAI 174 — 09.02.02-21	May 20, 2009
RAI 174 — 09.02.02-22	April 3, 2009
RAI 174 — 09.02.02-23	May 20, 2009

RAI 174 — 09.02.02-24	May 20, 2009
RAI 174 — 09.02.02-25	April 3, 2009
RAI 174 — 09.02.02-28	May 20, 2009
RAI 174 — 09.02.02-29	May 20, 2009
RAI 174 — 09.02.02-30	April 3, 2009
RAI 174 — 09.02.02-31	May 20, 2009
RAI 174 — 09.02.02-32	May 20, 2009
RAI 174 — 09.02.02-34	May 20, 2009
RAI 174 — 09.02.02-35	May 20, 2009
RAI 174 — 09.02.02-36	May 20, 2009
RAI 174 — 09.02.02-37	May 20, 2009
RAI 174 — 09.02.02-38	May 20, 2009
RAI 174 — 09.02.02-39 (Parts f and g)	May 20, 2009
RAI 174 — 09.02.02-42	May 20, 2009
RAI 174 — 09.02.02-43	May 20, 2009
RAI 174 — 09.02.02-44	May 20, 2009
RAI 174 — 09.02.02-45	May 20, 2009
RAI 174 — 09.02.02-46	May 20, 2009
RAI 174 — 09.02.02-47	May 20, 2009
RAI 174 — 09.02.02-48	May 20, 2009
RAI 174 — 09.02.02-51	May 20, 2009
RAI 174 — 09.02.02-52	May 20, 2009
RAI 174 — 09.02.02-53	May 20, 2009
RAI 174 — 09.02.02-54	May 20, 2009
RAI 174 — 09.02.02-55	May 20, 2009

Sincerely,

Ronda Pederson
ronda.pederson@areva.com
Licensing Manager, U.S. EPR Design Certification
AREVA NP Inc.
An AREVA and Siemens company
3315 Old Forest Road
Lynchburg, VA 24506-0935
Phone: 434-832-3694
Cell: 434-841-8788

From: Pederson Ronda M (AREVA NP INC)
Sent: Friday, February 27, 2009 5:46 PM
To: 'Getachew Tesfaye'
Cc: DELANO Karen V (AREVA NP INC); BENNETT Kathy A (OFR) (AREVA NP INC); KOWALSKI David J (AREVA NP INC)
Subject: Response to U.S. EPR Design Certification Application RAI No. 174, FSAR Ch. 9

Getachew,

Attached please find AREVA NP Inc.'s response to the subject request for additional information (RAI). The attached file, "RAI 174 Response US EPR DC.pdf" provides technically correct and complete responses to 8 of the 49 questions.

Appended to this file are affected pages of the U.S. EPR Final Safety Analysis Report in redline-strikeout format which supports the response to RAI 174 Questions 09.02.02-10, 09.02.02-17 and 09.02.02-33.

The following table indicates the respective pages in the response document, "RAI 174 Response US EPR DC.pdf," that contain AREVA NP's response to the subject questions.

Question #	Start Page	End Page
RAI 174 — 09.02.02-7	2	2
RAI 174 — 09.02.02-8	3	3
RAI 174 — 09.02.02-9	4	4
RAI 174 — 09.02.02-10	5	6
RAI 174 — 09.02.02-11	7	7
RAI 174 — 09.02.02-12	8	10
RAI 174 — 09.02.02-13	11	11
RAI 174 — 09.02.02-14	12	12
RAI 174 — 09.02.02-15	13	14
RAI 174 — 09.02.02-16	15	16
RAI 174 — 09.02.02-17	17	17
RAI 174 — 09.02.02-18	18	19
RAI 174 — 09.02.02-19	20	21
RAI 174 — 09.02.02-20	22	22
RAI 174 — 09.02.02-21	23	23
RAI 174 — 09.02.02-22	24	24
RAI 174 — 09.02.02-23	25	25
RAI 174 — 09.02.02-24	26	26
RAI 174 — 09.02.02-25	27	27
RAI 174 — 09.02.02-26	28	28
RAI 174 — 09.02.02-27	29	29
RAI 174 — 09.02.02-28	30	30
RAI 174 — 09.02.02-29	31	31
RAI 174 — 09.02.02-30	32	32
RAI 174 — 09.02.02-31	33	34
RAI 174 — 09.02.02-32	35	36
RAI 174 — 09.02.02-33	37	37
RAI 174 — 09.02.02-34	38	38
RAI 174 — 09.02.02-35	39	39
RAI 174 — 09.02.02-36	40	40
RAI 174 — 09.02.02-37	41	41
RAI 174 — 09.02.02-38	42	42
RAI 174 — 09.02.02-39	43	43
RAI 174 — 09.02.02-40	44	44
RAI 174 — 09.02.02-41	45	45
RAI 174 — 09.02.02-42	46	46
RAI 174 — 09.02.02-43	47	47

RAI 174 — 09.02.02-44	48	48
RAI 174 — 09.02.02-45	49	49
RAI 174 — 09.02.02-46	50	50
RAI 174 — 09.02.02-47	51	51
RAI 174 — 09.02.02-48	52	52
RAI 174 — 09.02.02-49	53	53
RAI 174 — 09.02.02-50	54	54
RAI 174 — 09.02.02-51	55	55
RAI 174 — 09.02.02-52	56	56
RAI 174 — 09.02.02-53	57	57
RAI 174 — 09.02.02-54	58	58
RAI 174 — 09.02.02-55	59	59

A complete answer is not provided for 41 of the 49 questions. The schedule for a technically correct and complete response to these questions is provided below.

Question #	**Response Date**
RAI 174 — 09.02.02-7	May 20, 2009
RAI 174 — 09.02.02-8	May 20, 2009
RAI 174 — 09.02.02-9	May 20, 2009
RAI 174 — 09.02.02-11	April 3, 2009
RAI 174 — 09.02.02-12 (Parts 6, 7 and 8)	May 20, 2009
RAI 174 — 09.02.02-16	April 3, 2009
RAI 174 — 09.02.02-18	April 3, 2009
RAI 174 — 09.02.02-19	May 20, 2009
RAI 174 — 09.02.02-20	May 20, 2009
RAI 174 — 09.02.02-21	May 20, 2009
RAI 174 — 09.02.02-22	April 3, 2009
RAI 174 — 09.02.02-23	May 20, 2009
RAI 174 — 09.02.02-24	May 20, 2009
RAI 174 — 09.02.02-25	April 3, 2009
RAI 174 — 09.02.02-28	May 20, 2009
RAI 174 — 09.02.02-29	May 20, 2009
RAI 174 — 09.02.02-30	April 3, 2009
RAI 174 — 09.02.02-31	May 20, 2009
RAI 174 — 09.02.02-32	May 20, 2009
RAI 174 — 09.02.02-34	May 20, 2009
RAI 174 — 09.02.02-35	May 20, 2009
RAI 174 — 09.02.02-36	May 20, 2009
RAI 174 — 09.02.02-37	May 20, 2009
RAI 174 — 09.02.02-38	May 20, 2009
RAI 174 — 09.02.02-39 (Parts a though e) RAI 174 — 09.02.02-39 (Parts f and g)	March 13, 2009 May 20, 2009
RAI 174 — 09.02.02-40	March 13, 2009
RAI 174 — 09.02.02-41	March 13, 2009

RAI 174 — 09.02.02-42	May 20, 2009
RAI 174 — 09.02.02-43	May 20, 2009
RAI 174 — 09.02.02-44	May 20, 2009
RAI 174 — 09.02.02-45	May 20, 2009
RAI 174 — 09.02.02-46	May 20, 2009
RAI 174 — 09.02.02-47	May 20, 2009
RAI 174 — 09.02.02-48	May 20, 2009
RAI 174 — 09.02.02-49	March 13, 2009
RAI 174 — 09.02.02-50	March 13, 2009
RAI 174 — 09.02.02-51	May 20, 2009
RAI 174 — 09.02.02-52	May 20, 2009
RAI 174 — 09.02.02-53	May 20, 2009
RAI 174 — 09.02.02-54	May 20, 2009
RAI 174 — 09.02.02-55	May 20, 2009

Sincerely,

Ronda Pederson
ronda.pederson@areva.com
Licensing Manager, U.S. EPR Design Certification
AREVA NP Inc.
An AREVA and Siemens company
3315 Old Forest Road
Lynchburg, VA 24506-0935
Phone: 434-832-3694
Cell: 434-841-8788

From: Getachew Tesfaye [mailto:Getachew.Tesfaye@nrc.gov]
Sent: Wednesday, January 28, 2009 3:56 PM
To: ZZ-DL-A-USEPR-DL
Cc: Larry Wheeler; John Segala; Peter Wilson; Peter Hearn; Joseph Colaccino; Michael Miernicki; Meena Khanna; ArevaEPRDCPEm Resource
Subject: U.S. EPR Design Certification Application RAI No. 174 (1806, 1810),FSAR Ch. 9

Attached please find the subject requests for additional information (RAI). A draft of the RAI was provided to you on January 9, 2009, and discussed with your staff on January 22, 2009. No changes were made to the draft RAI as a result of that discussion. The schedule we have established for review of your application assumes technically correct and complete responses within 30 days of receipt of RAIs. For any RAIs that cannot be answered within 30 days, it is expected that a date for receipt of this information will be provided to the staff within the 30 day period so that the staff can assess how this information will impact the published schedule.

Thanks,
Getachew Tesfaye
Sr. Project Manager
NRO/DNRL/NARP
(301) 415-3361

Hearing Identifier: AREVA_EPR_DC_RAIs
Email Number: 659

Mail Envelope Properties (5CEC4184E98FFE49A383961FAD402D310110F3AD)

Subject: Response to U.S. EPR Design Certification Application RAI No. 174, FSAR Ch 9, Supplement 4
Sent Date: 7/14/2009 6:16:06 PM
Received Date: 7/14/2009 6:16:09 PM
From: Pederson Ronda M (AREVA NP INC)

Created By: Ronda.Pederson@areva.com

Recipients:
"BENNETT Kathy A (OFR) (AREVA NP INC)" <Kathy.Bennett@areva.com>
Tracking Status: None
"DELANO Karen V (AREVA NP INC)" <Karen.Delano@areva.com>
Tracking Status: None
"KOWALSKI David J (AREVA NP INC)" <David.Kowalski@areva.com>
Tracking Status: None
"Tesfaye, Getachew" <Getachew.Tesfaye@nrc.gov>
Tracking Status: None

Post Office: AUSLYNCMX02.adom.ad.corp

Files	**Size**	**Date & Time**
MESSAGE	17772	7/14/2009 6:16:09 PM
RAI 174 Supplement 4 Response US EPR DC.pdf	318787	

Options
Priority: Standard
Return Notification: No
Reply Requested: No
Sensitivity: Normal
Expiration Date:
Recipients Received:

Response to

Request for Additional Information No. 174 (1806, 1810), Supplement 4

01/28/2009

U. S. EPR Standard Design Certification
AREVA NP Inc.
Docket No. 52-020
SRP Section: 09.02.02 - Reactor Auxiliary Cooling Water Systems
Application Section: 9.2.2

QUESTIONS for Balance of Plant Branch 1 (AP1000/EPR Projects) (SBPA)

Question 09.02.02-35:

RAI 9.2.8-01 (ID1810/6763); Based on a review of the information provided in Tier 2 of the Final Safety Analysis Report (FSAR), Section 9.2.8, "Safety Chilled Water System," the staff found that the description of the safety chilled water system (SCWS) is generally incomplete and does not adequately explain how design bases considerations are satisfied by the proposed design, what limiting assumptions apply, how much excess margin is available, what operating experience insights are relevant and how they were addressed, and so forth. Consequently, Tier 1 and Tier 2 of the Design Control Document (DCD) needs to be revised to include information that is sufficient to demonstrate that the SCWS is capable of performing its design-bases functions, that applicable design considerations are satisfied by the proposed design, and that reasonable assurance exists that the availability and design-bases capability of the SCWS will be maintained over the life of the plant. Regulatory Guide 1.206, "Combined License Applications for Nuclear Power Plants (LWR Edition)," provides guidance on the specific information that should be included in the application for evaluation by the staff.

Response to Question 09.02.02-35:

See the Responses to RAI 174, Questions 09.02.02-36 through 09.02.02-55. Where necessary, the U.S. EPR FSAR as it relates to the safety chilled water system (SCWS) in U.S. EPR FSAR Tier 1, Section 2.7.2 and U.S. EPR FSAR Tier 2, Section 9.2.8 will be revised as indicated in the Responses to RAI 174, Questions 09.02.02-36 through 09.02.02-55.

FSAR Impact:

U.S. EPR FSAR Tier 1, Section 2.7.2 and U.S. EPR FSAR Tier 2, Section 9.2.8 will be revised as described in the Responses to Questions 09.02.02-36 through 09.02.02-55 and indicated on the enclosed markups.

Question 09.02.02-36:

RAI 9.2.8-02 (ID1810/6765); Standard Review Plan (SRP) Section 9.2.2, which is being utilized as guidance for the review of the safety chilled water system (SCWS), specifies in Section III confirmation of the overall arrangement of the component cooling system (CCWS). The staff noted that Tier 1 Figure 2.7.2-1 (sheets 1 thru. 4) and Tier 2 Figure 9.2.8-1 (sheets 1 and 2) has inaccurate and incomplete information relating to safety related to non-safety piping interfaces.

a. Final Safety Analysis Report (FSAR) figures (Tier 1 Figure 2.7.2-1 and Tier 2 Figure 9.2.8-1) show the class break from the demineralized water make-up connection at a piping flange, with no check valve or other seismic isolation valve. This needs to be clarified to the exact location of the safety related to non-safety related class break.

b. FSAR figures (Tier 1 Figure 2.7.2-1 and Tier 2 Figure 9.2.8-1) do not show the nitrogen fill connection to the expansion tank and therefore the safety related to non-safety related class break is not shown.

c. FSAR figures (Tier 1 Figure 2.7.2-1 and Tier 2 Figure 9.2.8-1) do not properly show the class break for the relief valve tail pipe from the expansion tank.

d. FSAR figures (Tier 1 Figure 2.7.2-1 and Tier 2 Figure 9.2.8-1) do not properly show the class break to the hydrazine fill connection or the other adjacent hose connection (not specifically identified).

Response to Question 09.02.02-36:

a. U.S. EPR FSAR Tier 2, Figure 9.2.8-1—Safety Chilled Water System Diagram, Sheets 1 of 4 and 2 of 4, will be revised to show the safety-related (SR) boundary isolation valve and the safety/non-safety-related class break at the valve. The demineralized water connection will be removed from U.S. EPR FSAR Tier 1, Figure 2.7.2-1—Safety Chilled Water System Functional Arrangement, Sheets 1 through 4, because it does not perform a safety significant system function.

b. U.S. EPR FSAR Tier 2, Figure 9.2.8-1—Safety Chilled Water System Diagram, Sheets 1 of 4 and 2 of 4 will be revised to show the nitrogen fill connection to the expansion tank. The fill connection for nitrogen supply is for a temporary connection from the nitrogen supply source, and therefore, there is no safety-related to non-safety-related class break for a hard-piped interface connection between systems. The fill connection and tank are all within the same design area shown on the figure; therefore, a class break is not needed.

   The nitrogen fill connection to the expansion tank is not shown on U.S. EPR FSAR Tier 1, Figure 2.7.2-1—Safety Chilled Water System Functional Arrangement, Sheets 1 through 4, because it does not perform a safety significant system function.

c. The class break (design area break) for the relief valve tail pipe from the expansion tank will also be properly shown on the U.S. EPR FSAR Tier 2, Figure 9.2.8-1—Safety Chilled Water System Diagram, Sheets 1 of 4 and 2 of 4. Design Area B will be added to the figure to indicate a change in design conditions at the relief valve tail pipe. The relief valve and connecting piping will be removed from U.S. EPR FSAR Tier 1, Figure 2.7.2-1—Safety Chilled Water System Functional Arrangement, Sheets 1 through 4, because they do not perform a safety significant system function.

d. A class break (design area break) for the hydrazine fill connection and adjacent hose connection is not shown on U.S. EPR FSAR Tier 2, Figure 9.2.8-1—Safety Chilled Water System Diagram, Sheets 1 of 4 and 2 of 4 because the components for this connection are within the same design area classification shown on the figure. These connections will be removed from U.S. EPR FSAR Tier 1, Figure 2.7.2-1—Safety Chilled Water System Functional Arrangement, Sheets 1 through 4, because they do not perform a safety significant system function.

FSAR Impact:

U.S. EPR FSAR Tier 1, Figure 2.7.2-1 and U.S. EPR FSAR Tier 2, Figure 9.2.8-1 will be revised as described in the response and indicated on the enclosed markup.

Question 09.02.02-39:

Standard Review Plan (SRP) 9.2.2 Section III, requires confirmation of the overall arrangement of the component cooling system (CCWS) which is being utilized as guidance for the review of the SCWS. The safety chilled water system (SCWS) description and piping and instrumentation diagrams (P&ID), Tier 2, FSAR Figure 9.2.8-1, were reviewed to assess the design adequacy of the SCWS for performing its heat removal functions. While the P&ID shows the SCWS components and identifies the boundaries between safety-related and non-safety-related parts of the system, some of the information is incomplete, inaccurate, or inconsistent. Consequently, the applicant needs to revise the Final Safety Analysis Report (FSAR) to address the following considerations in this regard:

a. Pipe sizes are not shown on the Tier 2, FSAR Figure 9.2.8-1, and the system description does not explain the criteria that were used in establishing the appropriate pipe sizes (such as limiting flow velocities).

b. The system description does not provide design details such as system operating temperatures, pressures, and flow rates for all operating modes and alignments.

c. Tier 2, FSAR Figure 9.2.8-1 does not show where indications are displayed (e.g., local, remote panel, control room), and what instruments provide input to a process computer and/or have alarm and automatic actuation functions.

d. Tier 2, FSAR Figure 9.2.8-1 does not show what the normal valve positions are, what valves are locked in position, and what valves have automatic functions; and these design features are not described.

e. Tier 2, FSAR Figure 9.2.8-1 does not show specific set point for system alarms (including head tank) and relief and the bases for these set points are not explained in the system description.

f. Isolation valves for taking components out of service for maintenance are not shown on the Tier 2, FSAR Figure 9.2.8-1.

g. Describe in Section 9.2.8 why filters are shown in the return lines from some but not all HVAC units.

Response to Question 09.02.02-39:

a. This question has been addressed in the Response to RAI 174, Question 09.02.02-39, Part a.

b. This question has been addressed in the Response to RAI 174, Question 09.02.02-39, Part b.

c. This question has been addressed in the Response to RAI 174, Question 09.02.02-39, Part c.

d. This question has been addressed in the Response to RAI 174, Question 09.02.02-39, Part d.

e. This question has been addressed in the Response to RAI 174, Question 09.02.02-39, Part e.

f. U.S. EPR FSAR Tier 2, Figure 9.2.8-1—Safety Chilled Water System Diagram, Sheets 1 through 4, will be revised to show isolation valves for taking components out of service for maintenance.

g. U.S. EPR FSAR Tier 2, Section 9.2.8.2.2 will be revised to state that “upstream filters are provided as a precaution to protect downstream control valves which contain internals sensitive to particle trapping.”

FSAR Impact:

U.S. EPR FSAR Tier 2, Section 9.2.8.2.2 and U.S. EPR FSAR Tier 2, Figure 9.2.8-1 will be revised as described in the response and indicated on the enclosed markup.

Question 09.02.02-42:

General design criteria (GDC) 44 requires the safety chilled water system (SCWS) must be capable of removing heat from structures, system and components (SSCs) important to safety during normal operation. The system description (Section 9.2.8.2.) indicates that the SCWS design includes two 100% pumps (with one in standby); however, fluctuations in the supplied electrical frequency, increased pipe roughness due to aging and fouling, fouled debris filters, and maximum pressure drop through the system HXs, the actual amount of excess margin that is provided by the SCWS pump design and the basis for this determination was not explained. This information should be provided in the FSAR section 9.2.8.

Response to Question 09.02.02-42:

SCWS pump sizing details will be developed later in the design process. The required flow rate of each SCWS pump is defined by the heat to be removed from the system loads. Based on these calculations, the required pump size will account for pump degradation, grid frequency deviation, dynamic pressure losses, the head losses of the mechanical equipment of the associated SCWS at full load operation, and pipe degradation. Final SCWS pump sizing will also factor in detailed chiller information, which depends upon vendor selection.

U.S. EPR FSAR Tier 2, Section 9.2.8.2.2 will be revised to include the following information concerning pump design:

> "The required flow rate of each SCWS pump is defined by the heat to be removed from the system loads. As a minimum, the pumps are designed to fulfill the corresponding minimal required design mass flow rate under the following conditions:
>
> - Fluctuations in the supplied electrical frequency.
> - Increased pipe roughness due to aging and fouling.
> - Fouled debris filters.
> - Maximum pressure drop through the system heat exchangers.
> - Minimum water level in the expansion tank considers net positive suction head to prevent cavitation of the SCWS pump and prevent vortex effects.
>
> Determination of the discharge head of the pumps is based on dynamic pressure losses and head losses of the mechanical equipment of the associated SCWS at full load operation."

FSAR Impact:

U.S. EPR FSAR Tier 2, Section 9.2.8.2.2 will be revised as described in the response and indicated on the enclosed markup.

Question 09.02.02-45:

The safety chilled water system (SCWS) must be capable of removing heat from structures, systems and components (SSC) important to safety during normal operating and accident conditions over the life of the plant in accordance with general design criteria (GDC) 44 requirements. Under seismic or post-accident conditions where demineralized water may be unavailable for safety chilled water system (SCWS) makeup, the expansion tanks should contain sufficient water volume to assure reliable system operation without makeup for at least seven days. The Final Safety Analysis Report (FSAR) does not discuss expansion tank capabilities in the event of a makeup source interruption.

a. Describe the most limiting system leak rate that is assumed during normal operating and accident conditions, the bases for these assumptions, and how many days of operation the expansion tank is sized for should the makeup source be unavailable.

b. Describe how are these lines are treated with regard to expansion tank capabilities, and how are nitrogen relief valves routed to safe areas for discharge. Verify hose connections and safety related and seismic interface at the pump suction.

Response to Question 09.02.02-45:

a. SCWS expansion tank sizing details will be developed later in the design process. Expansion tank sizing and internal volume determination are dependent on several factors. The most limiting system leak rate that is assumed during normal operation or post-accident conditions, when demineralized water may be unavailable for SCWS makeup, will be considered in the SCWS expansion tank sizing. SRP 9.2.2, Section 3C requires closed-loop cooling systems to have sufficient capacity to accommodate expected out-leakage from the system for a period of seven days or have a seismic makeup source, which can be made available within a time frame consistent with the expansion tank capacity. A connection from a seismic makeup source is the method used to satisfy this requirement for the SCWS.

   Adequate tank volume is needed within the Min1 alarm level for operator action without going below the Min2 minimum level for continued system operation and adequate net positive suction head (NPSH) available. The SCWS MIN-MAX expansion tank setpoints are determined in conjunction with the expansion tank sizing. Each SCWS expansion tank has adequate capacity to accommodate out-leakage of one gpm for a period of approximately 160 minutes (2.67 hours). If the expansion tank level is dropping, operator action can be initiated any time prior to 2.67 hours to install a spool piece and open the connecting manual valves from the seismically qualified makeup source to feed the SCWS expansion tanks of the operating trains.

   Indications and alarms that will be available in the main control room and remote shutdown station will be identified later in the design process. Design basis accident (DBA) alarm response procedures for low level in the expansion tanks will initiate manual alignment of the fire water distribution system makeup to the SCWS expansion tanks. This out-leakage scenario is only a concern during post-seismic events.

   The leakage rate used is based on valve seat leakage through a safety-related to non-safety-related system boundary isolation valve. A two inch valve is conservatively assumed. The following methodology is used to determine the valve seat leakage.

ASME OM Code, subparagraph ISTC-3630 (e) states that leakage rate measurements shall be compared with the permissible leakage rates specified by the Owner for a specific valve or valve combination. If leakage rates are not specified by the Owner, the following rates shall be permissible:

(1) For water, 0.5D gal/min (12.4d ml/s) or 5 gal/min (315 ml/s), whichever is less, at function pressure differential

where,

D = nominal valve size, inches.

d = nominal valve size, centimeters.

Leakage rates for boundary isolation valves that require testing are based on ASME OM Code, 2004 Edition, Subsection ISTC.

U.S. EPR FSAR Tier 2, Figure 9.2.8-1—Safety Chilled Water System Diagram, Sheets 1 of 4 and 2 of 4 will be revised to include the makeup connection and manual isolation valves. U.S. EPR FSAR Tier 1, Figure 2.7.2-1—Safety Chilled Water System Functional Arrangement does not need to be revised to include these items because they do not perform a safety significant system function.

U.S. EPR FSAR Tier 2, Section 9.2.8.3.2 will be revised to include the following information:

> "Under seismic or post-accident conditions, when demineralized water may be unavailable for SCWS makeup, a manual connection to the fire water distribution system is available to provide a seismic makeup source within a time frame consistent with the SCWS expansion tank capacity to accommodate expected out-leakage from the system for a period of seven days."

b. The expansion tank relief valve is located on the liquid side of the SCWS. The relief valve discharge is routed to the nuclear island drain and vent system. Since the SCWS does not require a relief valve for the nitrogen volume within the expansion tank, there is no nitrogen relief valve discharge path. SCWS hose connections for interfacing support systems are within the safety-related/seismic interface design area on the pump suction side of the system. There are no direct non-safety-related interfaces with the pump.

FSAR Impact:

U.S. EPR FSAR Tier 2, Section 9.2.8.3.2 and U.S. EPR FSAR Tier 2, Figure 9.2.8-1, will be revised as described in the response and indicated on the enclosed markup.

Question 09.02.02-46:

The safety chilled water system (SCWS) must be capable of removing heat from structures, systems and components (SSCs) important to safety during normal operating and accident conditions over the life of the plant in accordance with general design criteria (GDC) 44 requirements. The Final Safety Analysis Report (FSAR) does not adequately describe the various operating modes and operator actions that are required and how the SCWS control system functions, such as how/when protective measures are called for (i.e., chilled water system "Protection OFF" alarms, refrigeration unit shuts down, chilled water circulating pump shuts down). These considerations need to be fully described in FSAR Tier 2 Section 9.2.8, including (for example):

a. how the safety chilled water system (SCWS) system performs the process of selecting a particular system measure to initiate when the pressure falls below the second set limit,
b. schematics showing all circuit process components with associated signal inputs and control signal outputs (the schematic provided should be of the type provided by Figure RAI 19-1, page 5, and Figure RAI 19-2, page 6, in "Response to Second Request for Additional information", Attachment A, ANP-10284Q2P),
c. failure positions for the flow control valves,
d. a discussion of normal power and alternate power (as shown in Tier 1 FSAR Table 2.7.2-2),
e. a discussion of how alternate supplies are implemented while maintaining divisional separation,
f. the bases for the trip setpoint for low expansion tank pressure,
g. SBO operation (FSAR Tier 2 Section 8.4 indicates that the Division 1 and 4 compressors are powered, but the SCWS pumps are not listed), and
h. instrumentation and controls (I&C) related to SCWS operation such as starts signals, trip signals, and permissives (the schematic that is provided should be of the type provided by Figure RAI 19-1, page 5, and Figure RAI 19-2, page 6, in "Response to Second Request for Additional information", Attachment A, ANP-10284Q2P).

Response to Question 09.02.02-46:

a. U.S. EPR FSAR Tier 2, Section 9.2.8.6 describes the SCWS pressure control. System pressure is monitored with the aid of two pressure measurements. The two measurements are combined into one measuring point. If the pressure falls below a set limit, an alarm is annunciated. If the pressure falls below a second set limit, one of the following measures is automatically initiated:

    - Chilled water system "Protection OFF" alarms.
    - Refrigeration unit shuts down.
    - Chilled water circulating pump shuts down.

b. Detailed schematics showing circuit process components with associated signal inputs and control signal outputs will be finalized later in the design process.

c. Failure positions for the flow control valves will be identified later in the design process.

d. This question is addressed in the Response to Question 09.02.02-54, Part g.

e. U.S. EPR FSAR Tier 2, Section 8.1.4.2 states that alternate feeds are provided between emergency power supply system (EPSS) divisions to provide normal and standby power to required safety-related systems, safety-related support systems, or components that do not have four 100 percent redundant trains when certain electrical components, including emergency diesel generators (EDG), are out of service. Physical and electrical separation is maintained between redundant Class 1E cables.

f. Surge tank level trip setpoints that maintain SCWS pump net positive suction head available (NPSHA) will be identified later in the design process.

g. The SCWS pumps are included in loads powered from the BNB01 motor control centers (MCC) in the four divisions (e.g., 31BNB01 in Division 1). U.S. EPR FSAR Tier 2, Table 8.4-1—Station Blackout Continuous Loading - Train 1 Estimated and Table 8.4-2—Station Blackout Loading - Train 2 Estimated group all 480 Volt loads together. As indicated in the Notes Column in both tables, this includes the BNB01 load.

h. Instrumentation and controls related to SCWS operation, such as start and trip signals and permissive interlocks, will be identified later in the design process. Schematics showing circuit process components with associated signal inputs and control signal outputs will also be finalized later in the design process.

FSAR Impact:

The U.S. EPR FSAR will not be changed as a result of this question.

Question 09.02.02-47:

The safety chilled water system (SCWS) must be capable of removing heat from structures, systems and components (SSCs) important to safety during normal operating and accident conditions over the life of the plant in accordance with general design criteria (GDC) 44 requirements. The Final Safety Analysis Report (FSAR) states that each of the four SCWS trains circulates chilled water to the user heat exchangers with one of the two chilled water circulating pumps. The other pump remains in standby and starts automatically upon failure of the running pump. However, FSAR Tier 2 Section 9.2.8 does not explain how the automatic start of the standby pump and the protection-off signal based on pump failure are coordinated (note that automatic start of the standby pump is mentioned in FSAR Tier 1 Table 2.7.2-3, Item 4.4 of the inspections, tests, analyses, and acceptance criteria, but this feature is not described in Tier 2 of the system description).. The following information needs to be included in FSAR Tier 2 Section 9.2.8:

a. Explain how the SCWS system automatically starts a standby pump upon failure of the running pump. Provide schematic diagrams showing all inputs (i.e., PS, logic inputs , sensor inputs, all variables, actuation logic, binary limitation signals), with input types (i.e. PS, hardwired, fiber, type of isolation used), SCWS circuit components, and all SCWS control signal outputs of the SCWS control system. The schematic provided should be of the type provided by Figure RAI 19-1, page 5, and Figure RAI 19-2, page 6, in “Response to Second Request for Additional information”, Attachment A, ANP-10284Q2P.

b. Provide a discussion of these pump trips and coordination of signals in FSAR Tier 2 Section 9.2.8. Similarly, a discussion of the heating, ventilation and cooling (HVAC) system backup by the non-safety related 100% capacity maintenance train (cooled by operational chilled water) is discussed in the Technical Specification Bases (B 3.7.9) but is not described in FSAR Tier 2 Section 9.2.8.

Response to Question 09.02.02-47:

a. Specific instrumentation and controls (I&C) circuits will be identified later in the design process. Schematics showing circuit process components with associated signal inputs and control signal outputs will be finalized later in the design process.

b. U.S. EPR FSAR Tier 2, Section 9.2.8.3.2 will be revised to state that a mechanical or electrical failure of the running SCWS pump results in a transfer to the standby pump. Specific details of the interaction and coordination of I&C signals with the protection-off signal will be identified later in the design process.

   U.S. EPR FSAR Tier 2, Section 9.4.6 addresses the heating, ventilation and cooling (HVAC) system backup by the non-safety-related, 100 percent capacity maintenance train (cooled by operational chilled water). The backup provided by operational chilled water to the safeguard building ventilation system is supplied to a separate cooling coil in the HVAC system and has no impact on the SCWS.

FSAR Impact:

U.S. EPR FSAR Tier 2, Section 9.2.8.3.2 will be revised as described in the response and indicated on the enclosed markup.

Question 09.02.02-51:

Means must be provided for monitoring effluent discharge paths and the plant environs for radioactivity that may be released in accordance with general design criteria GDC 64 requirements. Also, 10 CFR 52.47(a)(6) and 10 CFR 20.1406 require applicants for standard plant design certifications to describe how facility design and procedures for operation will minimize contamination of the facility and the environment. The staff's review criteria (Standard Review Plan Section 9.2.2, Paragraph III.4.C) specify that provisions should be provided to detect and control leakage of radioactive contamination into and out of the component cooling system (CCWS) which is the heat sink for the safety chilled water system (SCWS). The design is considered to be acceptable by the staff if the SCWS piping and instrumentation diagram (P&IDs) show that radiation monitors are located on the SCWS discharge and at components that are susceptible to leakage, and if the components that are susceptible to leakage can be isolated. However, the staff noted that Tier 2 Final Safety Analysis Report (FSAR) Section 9.2.8 and the SCWS P&ID do not include radiation monitors in the system design and the NRC regulations in this regard have not been addressed. Additional information needs to be provided in FSAR Tier 2 Section 9.2.8 to address the NRC requirements referred to above.

Response to Question 09.02.02-51:

A process radiation monitor is provided in Trains 1 and 4 of the SCWS, downstream of the low head safety injection (LHSI) pump mechanical seal heat exchanger, to monitor for possible leakage of radioactive fluid from the heat exchanger. The LHSI pump mechanical seal is directly cooled by reactor coolant. This process radiation monitor satisfies the requirements of GDC 64, 10 CFR 52.47(a)(6), and 10 CFR 20.1406.

Other than the above potential for possible leakage, the SCWS is free of any radioactivity resulting from plant operation. The SCWS design is consistent with the U.S. EPR contaminant management philosophy to comply with the requirements of 10 CFR 20.1406, as described in U.S. EPR FSAR Tier 2, Section 12.3.6. Migration of radioactive material from potentially radioactive systems is prevented with a minimum of two barriers. The CCWS is located between the SCWS and the residual heat removal system (RHRS). In addition to the CCWS/SCWS heat exchanger (HX), there is a second HX barrier between the CCWS and RHRS. To directly transfer contaminated water to the SCWS, two heat exchangers must fail simultaneously. It is unlikely that two monitored systems will fail simultaneously and remain undetected. Radiation monitors are located in the CCWS to detect radioactive contamination entering and exiting the system. With two barriers between the SCWS and the RHRS, as well as provisions provided in the CCWS, additional radiation monitors in the SCWS are not required.

U.S. EPR FSAR Tier 2, Section 9.2.8.4 will be revised to include the following:

- "A process radiation monitor is provided in Trains 1 and 4 of the SCWS, downstream of the LHSI pump mechanical seal heat exchanger, to monitor for possible leakage of radioactive fluid from the heat exchanger. Otherwise, migration of radioactive material from potentially radioactive systems is prevented with a minimum of two heat exchanger barriers. Radiation monitors are located in the CCWS to detect radioactive contamination entering and exiting the system."

U.S. EPR FSAR Tier 2, Figure 9.2.8-1—Safety Chilled Water System Diagram, Sheet 3 of 4 will be revised to include the addition of a radiation monitor in the SCWS discharge at the exit of the LHSI pump mechanical seal heat exchanger.

FSAR Impact:

U.S. EPR FSAR Tier 2, Section 9.2.8.4 and U.S. EPR FSAR Tier 2, Figure 9.2.8-1 will be revised as described in the response and indicated on the enclosed markup.

Question 09.02.02-52:

Standard Review Plan (SRP) Section 9.2.2, which is being utilized as guidance for review of the safety chilled water system (SCWS), specifies in Section III confirmation of the overall arrangement of the component cooling system (CCWS). Technical Specification (TS) Bases (B3.7.9) states that each compressor unit contains three 50 percent compressors. However, the basis does not indicate if the chilled water train is still 100% capable with one of the three compressors inoperable. There is no mention of the three compressors per unit in Final Safety Analysis Report (FSAR) Tier 2 Section 9.2.8.

a. Describe the basis for the three compressors and determine if a safety chilled water train remains operable with one of its three compressors inoperable and provide this description in the FSAR and TS.

b. Describe if the three compressor design is part of the single-failure analysis for safety chilled water and provide this description in the FSAR and TS.

c. Describe how does the compressor control system handles a failed compressor and describe if the three compressor configuration applies to both the water-cooled and air-cooled units and provide this description in the FSAR and TS.

Response to Question 09.02.02-52:

a. Each refrigeration chiller (air-cooled and water-cooled) in the four divisions of the SCWS has three 50 percent capacity compressors to provide sufficient operating redundancy and flexibility in the event of a compressor failure. The two remaining chiller compressors provide 100 percent capacity.

   U.S. EPR FSAR Tier 2, Section 9.2.8.3.2 and U.S. EPR FSAR Tier 2, Chapter 16, Technical Specifications (TS) Bases (B3.7.9) will be revised to reflect this information.

b. See Response to Part a. The three x 50 percent compressor design is provided for operating redundancy and flexibility and has no bearing on the single failure analysis.

c. See Response to Part a. Specific details of the instrumentation and controls (I&C) configuration for the SCWS chillers, and the control staging of the compressors will be identified later in the design process.

FSAR Impact:

U.S. EPR FSAR Tier 2, Section 9.2.8.3.2 and Chapter 16, Technical Specifications (TS) Bases (B3.7.9) will be revised as described in the response and indicated on the enclosed markup.

Question 09.02.02-54:

Standard Review Plan (SRP) 9.2.2, which is being utilized as guidance for the review of the safety chilled water system (SCWS), specifies in Section III confirmation of the overall arrangement of the component cooling system (CCWS). The staff found that the Tier 1 and Tier 2 information is incomplete, inconsistent, inaccurate, or that clarification is needed and asked the applicant to revise the information in FSAR Tier 1 Section 2.7.7 and applicable Tier 2 Sections (as appropriate) to address the following considerations in this regard:

a. Although the Introduction Section in Chapter 1 of the Tier 1 Final Safety Analysis Report (FSAR) states that the information in the Tier 1 portion of the FSAR is extracted from the detailed information contained in Tier 2, the staff found that much of the information provided in FSAR Tier 1 is not described in Tier 2 FSAR Section 9.2.8 (e.g., equipment locations, valve functional requirements, indication and control information, priority actuation and control system description and functions, automatic actuation and interlock details, power supplies (normal and alternate), valve failure modes, and harsh environment considerations).

b. The specifications do not stipulate that the SCWS is accessible for performing periodic inspections as required by general design criteria (GDC) 45.

c. Specifications are needed to assure that the liquid filters satisfy design and performance requirements. Liquid filter are not listing in Tier 1 Table 2.7.2-1, “SCWS Equipment Mechanical Design.”

d. Tier 1 Figure 2.7.2-1, “Safety Chilled Water System Functional Arrangement,” does not show nominal pipe sizes, which are necessary for design certification.

e. Tier 1 Table 2.7.7.2-1, “Safety Chilled Water System Functional Arrangement’ does not show the safety related class break at the expansion tank relief valve.

f. Tier 1 Table 2.7.7.2-1, “Safety Chilled Water System Functional Arrangement,’’ instruments are missing at the expansion tank (pressure and level).

g. Tier 1 Table 2.7.2-2,”Safety Chilled Water System Equipment I&C (instrumentation and controls) and Electrical Design,” notes alternate and normal power supplied. This alternate power arrangement discussion is missing from FSAR Tier 2 Section 9.2.8 and from the TS basis.

h. The inspections, tests, analyses, and acceptance criteria (ITAAC) in Tier 1 Section 2.7.7 and Tier 2 Section 14.2.12.6.2, “Safety Chilled Water (Test #52),” do not include consideration of the instrumentation requirements listed in Tier 2 Section 9.2.8.6, such as expansion tank low pressure limits and chiller evaporator trips.

Response to Question 09.02.02-54:

a. For the SCWS, information is also provided in U.S. EPR FSAR Tier 2 sections other than U.S. EPR FSAR Tier 2, Section 9.2.8. For example:

    - Equipment locations and environmental qualification (EQ) information, including functions, such as reactor trip (RT), engineered safeguards (ES), and post accident monitoring (PAM), is provided in U.S. EPR FSAR Tier 2, Table 3.10-1—List of Seismically and Dynamically Qualified Mechanical and Electrical

Equipment, and Table 3.11-1—List of Environmentally Qualified Electrical/I&C Equipment.

- Indication and control requirements, as well as interlock details, are addressed in U.S. EPR FSAR Tier 2, Sections 7.3 through 7.6.

b. Information regarding accessibility for Inservice Inspection (ISI) is not required in Tier 1 as addressed in SRP 14.3, Appendix C, Fluid Systems Review Checklist:

> "(xii) Accessibility for ISI Testing and Inspection. The accessibility does not have to be addressed in Tier 1, but should be addressed in Tier 2. The NRC does not intend to grant reliefs to the ISI requirements after design certification."

Active components of the SCWS divisions are capable of being periodically tested, and required inspections can be performed during plant operation (GDC 45 and GDC 46). Refer to U.S. EPR FSAR Tier 2, Section 9.2.8.1.

c. Filters in the SCWS are provided solely for equipment protection and are not credited in safety analyses; therefore, they are not 'safety significant' and do not require Tier 1 treatment. For example, filters would be included if they are required to remove radionuclides as part of the primary safety function of the system (see SRP 14.3 Appendix C, Fluid Systems Review Checklist, Item (4):

> "(4) Filters - Filters that are required for a safety function (such as Control room HVAC radiation filtering) should be in the design description. The basic configuration ITAAC should check that the filter exists, but need not test the filter performance."

d. Refer to SRP 14.3, Appendices A and C, along with previous design certifications as well as NUREG-1789, NRC Inspection Manual Chapter (IMC) 2501, IMC 2502, IMC 2503 and IMC 2504. There will be non-ITAAC related inspections (IMCs 2501, 2502, and 2504) and ITAAC related inspections (IMC 2503). An item is included in U.S. EPR FSAR Tier 1 and has ITAAC only if it meets the 'safety significant' guidance provided in SRP 14.3 and is evidenced in the previous design certifications. ITAAC are specified only for the most safety significant features. The specific size of piping is not 'safety significant;' however, the performance of the system to meet its safety significant function is safety significant.

System performance ITAAC for the SCWS safety significant function to deliver refrigerated chilled water to the safety-related HVAC systems and to Divisions 1 and 4 LHSI motor cooler and pump sealing cooler are provided in U.S. EPR FSAR Tier 1, Table 2.7.2-3—Safety Chilled Water System ITAAC, Item 7.1, Item 7.2, and Item 7.3. The treatment of information in U.S. EPR FSAR Tier 1, Section 2.7.2 is consistent with previous design certifications and SRP 14.3 figures checklists.

e. See the Response to Question 09.02.02-36. The expansion tank relief valve and connecting piping will be removed from U.S. EPR FSAR Tier 1, Figure 2.7.2-1—Safety Chilled Water System Functional Arrangement, Sheet 1 of 4.

f. Expansion tank (pressure and level) instruments do not provide a 'safety significant' function for the SCWS; therefore, they do not require Tier 1 treatment.

g. U.S. EPR FSAR Tier 2, Section 9.2.8.3.2 and U.S. EPR FSAR Tier 2, Chapter 16, Technical Specifications (TS) Bases (B3.7.9) will be revised to include information about the alternate power arrangement.

h. The instrumentation requirements listed in U.S. EPR FSAR Tier 2, Section 9.2.8.6, such as expansion tank low pressure limits and chiller evaporator trips do not provide a 'safety significant' function for the SCWS; therefore, they do not require Tier 1 treatment.

FSAR Impact:

U.S. EPR FSAR Tier 2, Section 9.2.8.3.2 and Chapter 16, Technical Specifications (TS) Bases (B3.7.9) will be revised as described in the response and indicated on the enclosed markup.

Question 09.02.02-55:

Standard Review Plan (SRP) Section 9.2.2, which is being utilized as guidance for the review of the safety chilled water system (SCWS), specifies in Section III confirmation of the overall arrangement of the component cooling system (CCWS). The staff found that the proposed inspections, tests, analyses, and acceptance criteria (ITAAC) in Final Safety Analysis Report (FSAR) Tier 1 Section 2.7.7, Table 2.7.2-3, are incomplete, inconsistent, inaccurate, or that clarification is needed. Consequently, the Tier 1 information needs to be revised to address the following:

a. An item needs to be added to confirm important design details, such as nominal pipe size. Item 4.3 is misleading since there are no actuators controlled by the priority and actuator control system (PACS).

b. Item 7.2 needs to specify that SCWS pump testing to demonstrate adequate net positive suction head will be completed at the minimum expansion tank level. The acceptance criteria for an acceptable test need to be specified.

c. Item 7.5, the system should be tested with both divisional 100% pumps running to demonstrate dual system flow capacity (strong pump vs. weak pump). Running of both pumps normally occurs for short periods of time during pump swaps.

d. Quantitative acceptance criteria need to be established for all ITAAC as applicable (flow rates, heat transfer rates, completion times, etc.).

e. No test item is provided to demonstrate that water hammer will not occur in the as built system upon manual or automatic start of a previously idle train, and during loss-of-power scenarios.

Response to Question 09.02.02-55:

a. With respect to adding nominal pipe sizes to U.S. EPR FSAR Tier 1, Section 2.7.2 and Table 2.7.2-3—Safety Chilled Water System ITAAC, see the Response to Question 09.02.02-54, Part d.

   Item 4.3 will be deleted from U.S. EPR FSAR Tier 1, Section 2.7.2 and Table 2.7.2-3—Safety Chilled Water System ITAAC. There are no actuators controlled by the priority and actuator control system (PACS).

b. U.S. EPR FSAR Tier 1, Table 2.7.2-3—Safety Chilled Water System ITAAC, Item 7.2, will be revised to specify that SCWS pump testing to demonstrate adequate net positive suction head (NPSHA) will be performed at the minimum expansion tank level.

c. Testing both divisional 100 percent pumps running to demonstrate dual system flow capacity (strong pump versus weak pump) is not considered a ‘safety significant’ feature; therefore, it does not require Tier 1 treatment.

d. Quantitative acceptance criteria for SCWS flow and temperature will be added to U.S. EPR FSAR Tier 1, Table 2.7.2-3—Safety Chilled Water System ITAAC, Item 7.1 and Item 7.3.

e. As described in U.S. EPR FSAR Tier 2, Section 9.2.8.1, the SCWS is designed to permit appropriate periodic pressure and functional testing in accordance with GDC 46. Preoperational testing will be performed on the SCWS as described in U.S. EPR FSAR Tier 2, Section 14.2, Test #052 to demonstrate the proper operation of the SCWS in all operational configurations, including flow balancing, and demonstrate that water hammer does not occur upon manual or automatic start of a previously idle train and during loss-of-power scenarios.

   The valves that provide proper operation of the SCWS are periodically tested in accordance with ASME OM Code as described in U.S. EPR FSAR Tier 2, Chapter 16, Technical Specifications, Section 5.5.7.

FSAR Impact:

U.S. EPR FSAR Tier 1, Section 2.7.2 and Table 2.7.2-3 will be revised as described in the response and indicated on the enclosed markup.

U.S. EPR Final Safety Analysis Report Markups

3.10 Portions of the SCWS piping shown as ASME Code Section III in Figure 2.7.2-1 are installed in accordance with an ASME Code Section III Design Report.

3.11 Pressure boundary welds in portions of the SCWS piping shown as ASME Code Section III in Figure 2.7.2-1 are in accordance with ASME Code Section III.

3.12 Portions of the SCWS piping shown as ASME Code Section III in Figure 2.7.2-1 retain their pressure boundary integrity at their design pressure.

3.13 Portions of the SCWS piping shown as ASME Code Section III in Figure 2.7.2-1 are installed in accordance with ASME Code Section III requirements.

4.0 I&C Design Features, Displays and Controls

4.1 Displays listed in Table 2.7.2-2—Safety Chilled Water System Equipment I&C and Electrical Design are retrievable in the MCR and the remote shutdown station (RSS) as listed in Table 2.7.2-2.

4.2 The SCWS equipment controls are provided in the MCR and the RSS as listed in Table 2.7.2-2.

09.02.02-55

4.3 Deleted~~Equipment listed as being controlled by a priority and actuator control system (PACS) module in Table 2.7.2-2 responds to the state requested by a test signal~~

4.4 The SCWS has the following interlocks: The standby recirculation pump automatically starts if the running pump trips.

5.0 Electrical Power Design Features

5.1 The components designated as Class 1E in Table 2.7.2-2 are powered from Class 1E division as listed in Table 2.7.2-2 in a normal or alternate feed condition.

5.2 Valves listed in Table 2.7.2-2 fail as-is on loss of power.

6.0 Environmental Qualifications

6.1 Components in Table 2.7.2-2, that are designated as harsh environment, will perform the function listed in Table 2.7.2-1 in the environments that exist before and during the time required to perform their function.~~Equipment listed in Table 2.7.2-2 for harsh environment can perform the safety function in Table 2.7.2-1 following exposure to the design basis environments for the time required.~~

7.0 Equipment and System Performance

7.1 The SCWS chiller refrigerating units shown on Figure 2.7.2-1 have the capacity to provide chilled water at the temperature to support the heat removal requirements of each user.

7.2 The pumps listed in Table 2.7.2-1 have sufficient net positive suction head absolute.

7.3 The SCWS delivers the design flow rate to the equipment listed in Table 2.7.2-1.

Table 2.7.2-3—Safety Chilled Water System ITAAC (5 Sheets)

09.02.02-55

Commitment Wording		Inspections, Tests, Analyses	Acceptance Criteria
4.3	~~Equipment listed as being controlled by a PACS module in Table 2.7.2-2 responds to the state requested by a test signal.~~Deleted	~~A test will be performed using test signals.~~ Deleted	~~Equipment listed as being controlled by a PACS module in Table 2.7.2-2 responds to the state requested by the test signal.~~ Deleted
4.4	The SCWS has the following interlocks: The standby recirculation pump automatically starts if the running pump trips.	Tests will be performed using test signals to verify the interlock.	The following interlock responds as specified below when activated by a test signal: The standby recirculation pump automatically starts if the running pump trips.
5.1	The components designated as Class 1E in Table 2.7.2-2 are powered from the Class 1E division as listed in Table 2.7.2-2 in a normal or alternate feed condition.	a. Testing will be performed for components designated as Class 1E in Table 2.7.2-2 by providing a test signal in each normally aligned division. b. Testing will be performed for components designated as Class 1E in Table 2.7.2-2 by providing a test signal in each division with the alternate feed aligned to the divisional pair.	a. The test signal provided in the normally aligned division is present at the respective Class 1E component identified in Table 2.7.2-2. b. The test signal provided in each division with the alternate feed aligned to the divisional pair is present at the respective Class 1E component identified in Table 2.7.2-2.
5.2	Valves listed in Table 2.7.2-2 fail as-is on loss of power.	Testing will be performed for the valves listed in Table 2.7.2-2 to fail as-is on loss of power.	Following loss of power, the valves listed in Table 2.7.2-2 fail as-is.

Table 2.7.2-3—Safety Chilled Water System ITAAC (5 Sheets)

Commitment Wording		Inspections, Tests, Analyses	Acceptance Criteria
		b. Equipment listed as harsh environment in Table 2.7.2-2 will be inspected to verify installation in accordance with the construction drawings including the associated wiring, cables and terminations. Deviations to the construction drawings will be reconciled to the EQDP.~~b. For equipment listed as qualified for harsh environment in Table 2.7.2-2 an inspection will be performed of the as-installed Class 1E equipment and the associated wiring, cables and terminations.~~	b. Inspection reports exists and conclude that the equipment listed in Table 2.7.2-2 as harsh environment has been installed per the construction drawings and any deviations have been reconciled to the EQDP.~~b. Inspection concludes the as-installed Class 1E equipment and the associated wiring, cables, and terminations as listed in Table 2.7.2-2 for harsh environment conform to the design.~~ 09.02.02-55
7.1	The SCWS chiller refrigerating units shown on Figure 2.7.2-1, have the capacity to provide chilled water at the temperature to support the heat removal requirements of each user	Tests and analyses will be performed to demonstrate the capability of the SCWS chiller refrigerating units to provide chilled water at a temperature to support the heat removal requirements of all users.	The SCWS chiller refrigerating units have the capacity to provide chilled water at the required temperature of 41°F.
7.2	The pumps listed in Table 2.7.2-1 have sufficient NPSHA.	Testing and analyses will be performed to verify NPSHA for pumps listed in Table 2.7.2-1.	A report exists and concludes that the pumps listed in Table 2.7.2-1 have NPSHA that is greater than net positive suction head required (NPSHR) at ~~system run-out flow~~the minimum expansion tank level.
7.3	The SCWS delivers the design flowrate to the equipment listed in Table 2.7.2-1.	Tests and analyses will be performed to determine the SCWS delivery rate under design conditions.	The SCWS delivers the design flowrate to the equipment listed in Table 2.7.2-1. - 30 QKA 10/40 AC001: 736 Gpm - 30 QKA 20/30 AC001: 825 Gpm

09.02.02-36

Figure 2.7.2-1—Safety Chilled Water System Functional Arrangement
Sheet 1 of 4

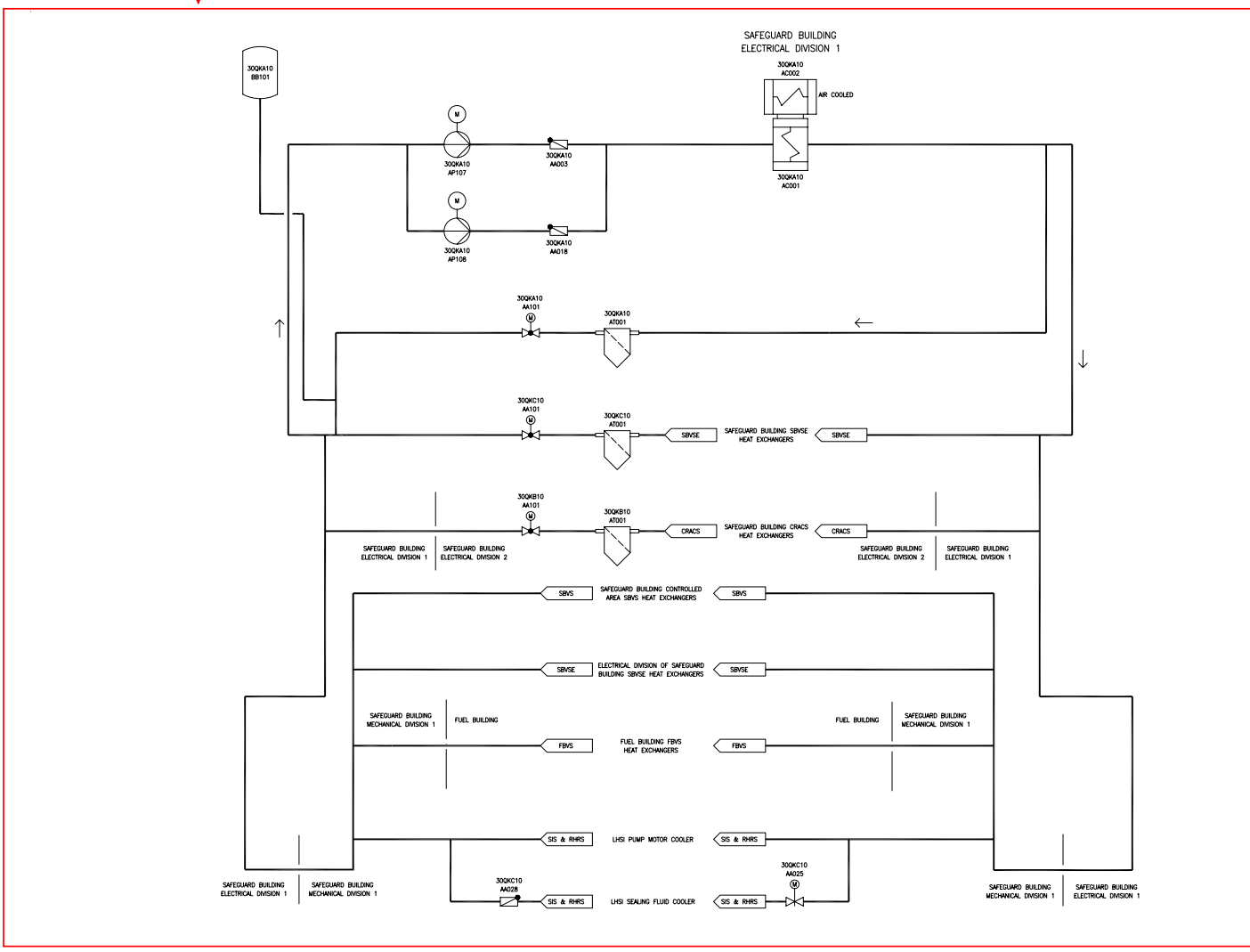

09.02.02-36

Figure 2.7.2-1—Safety Chilled Water System Functional Arrangement
Sheet 2 of 4

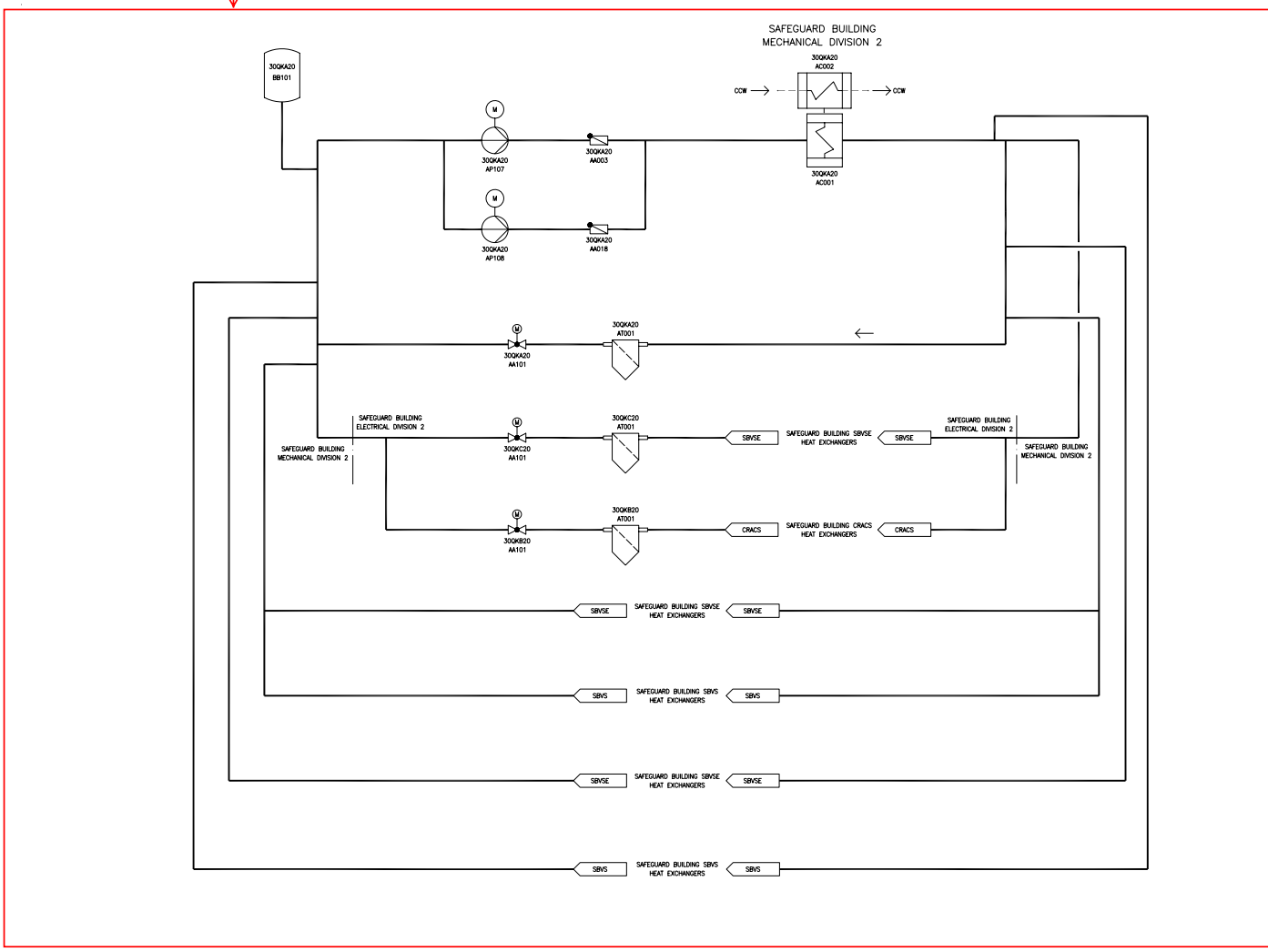

09.02.02-36

Figure 2.7.2-1—Safety Chilled Water System Functional Arrangement
Sheet 3 of 4

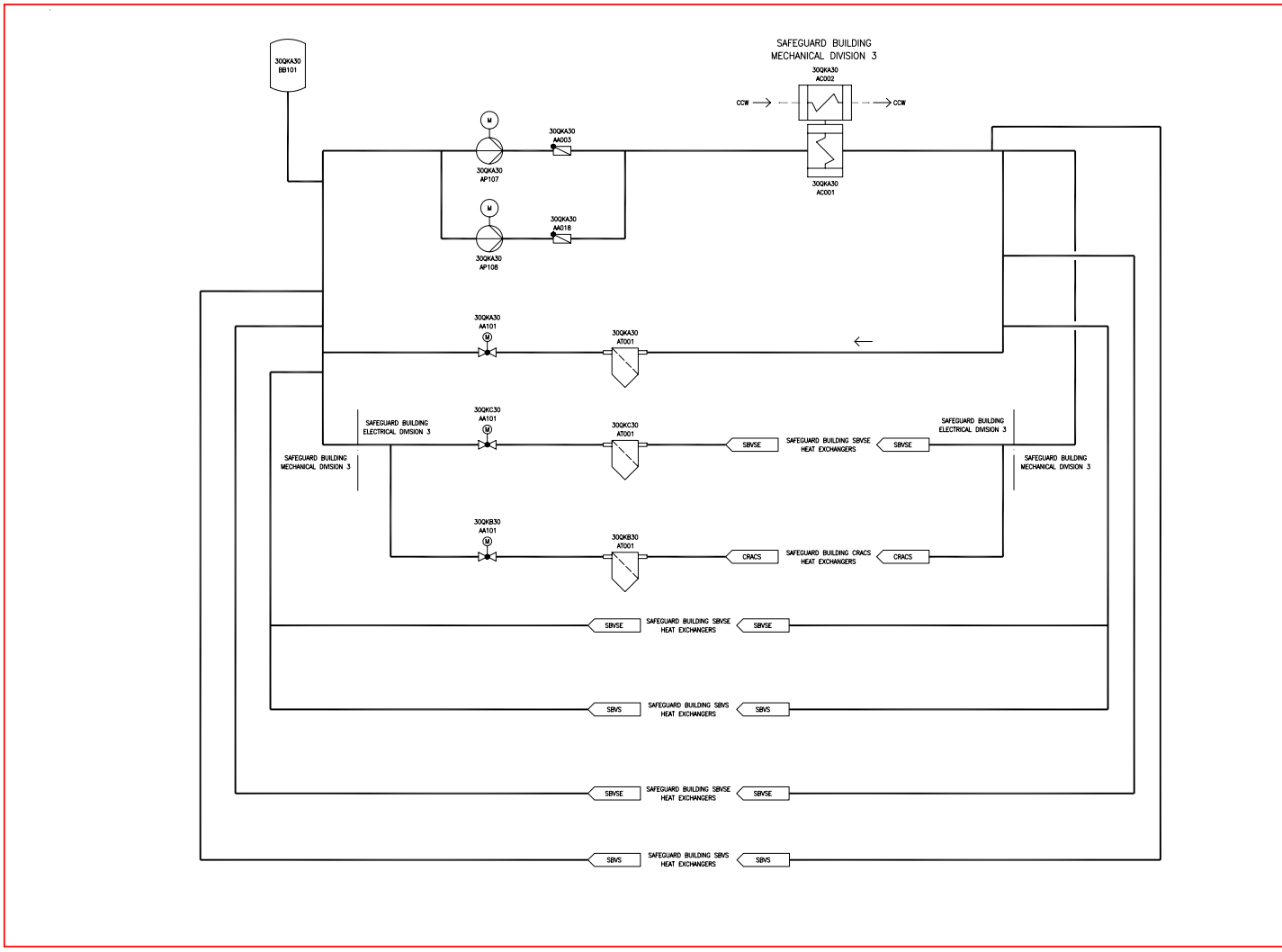

09.02.02-36

Figure 2.7.2-1—Safety Chilled Water System Functional Arrangement
Sheet 4 of 4

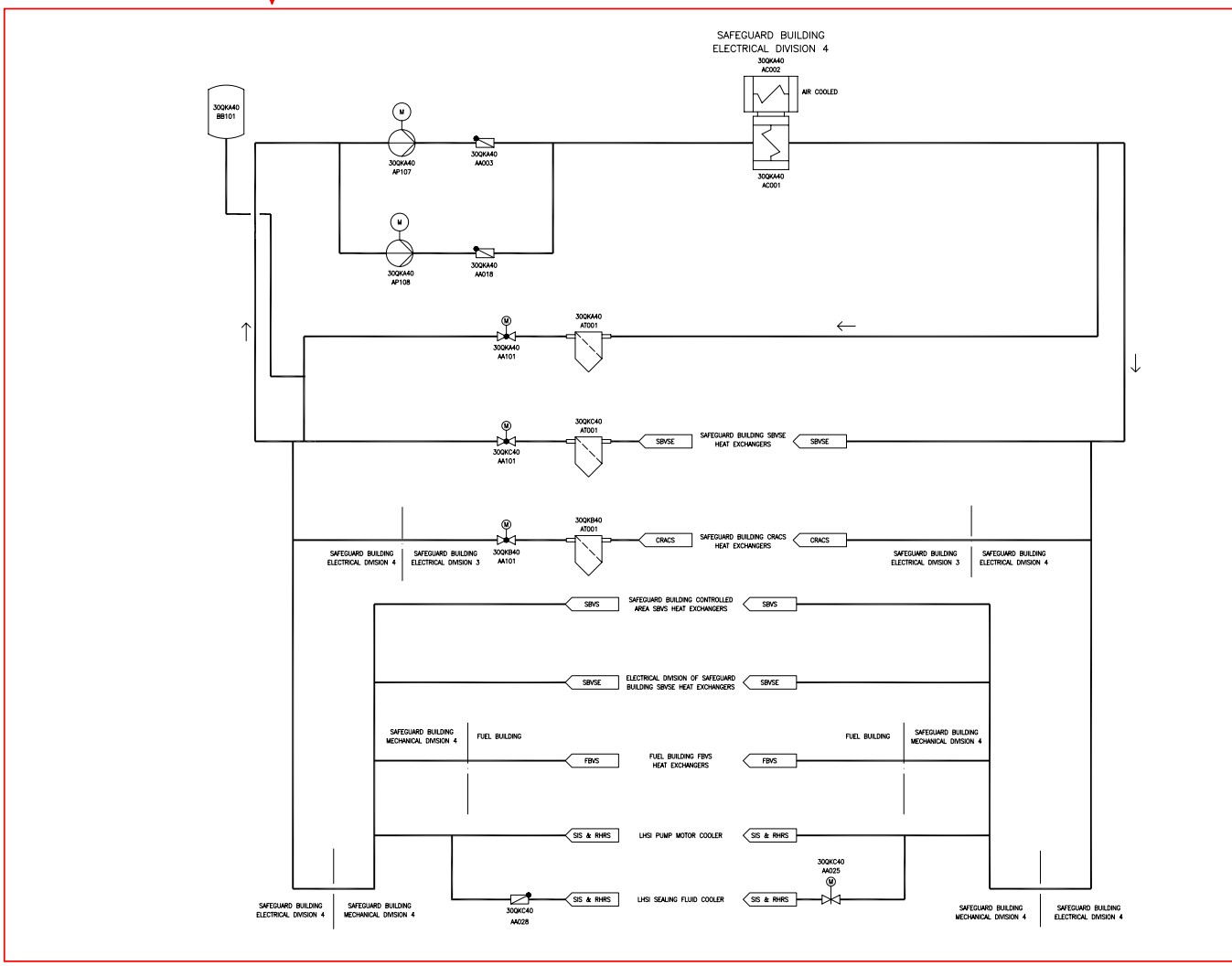

9.2.8.2 System Description

9.2.8.2.1 General Description

The SCWS consists of four separate, physically separated independent divisions, numbered 1 to 4. Each is located in one of the four SBs. Each SCWS division is a closed loop system that supplies chilled cooling water for specified area HVAC air handling units (AHU) and, where required, process systems cooling. Each division consists of a refrigeration chiller unit, two pumps, expansion tank, user loads, and the associated piping and controls.

The SCWS provides chilled water to the HVAC cooling coils of the main control room (MCR), the electrical division rooms (SBVSE) in the SBs, SB controlled-area ventilation system (SBVS), Fuel Building (FB) ventilation system (FBVS), and the low head safety injection system (LHSI) pump motors in SB Divisions 1 and 4.

System design parameters are listed on Table 9.2.8-1—Safety Chill Water Design Parameters. The SCWS flow diagram is shown in Figure 9.2.8-1—Safety Chilled Water System Diagram.

9.2.8.2.2 Component Description

The general description of the component design features for the SCWS is provided below. Refer to Section 3.2 for details of the seismic and system quality group classification of the SCWS.

Chilled Water Pumps

Two 100 percent SCWS pumps, with one in standby, in each of the four divisions circulates chilled water between the HVAC users and the evaporator of the chiller refrigeration unit in each division.

09.02.02-42

The required flow rate of each SCWS pump is defined by the heat to be removed from the system loads. As a minimum, the pumps are designed to fulfill the corresponding minimal required design mass flow rate under the following conditions:

- Fluctuations in the supplied electrical frequency.
- Increased pipe roughness due to aging and fouling.
- Fouled debris filters.
- Maximum pressure drop through the system heat exchangers.
- Minimum water level in the expansion tank considers net positive suction head to prevent cavitation of the SCWS pump and prevent vortex effects.

09.02.02-42

Determination of the discharge head of the pumps is based on dynamic pressure losses and head losses of the mechanical equipment of the associated SCWS at full load operation.

Air-Cooled Chiller Refrigeration Unit

SCWS, Divisions 1 and 4, each contain one 100 percent air-cooled chiller refrigeration unit that functions to refrigerate chilled water to its design basis temperature of 41°F for supply to the HVAC users. These chillers are located in dedicated rooms of the SBs. Each chiller contains a condenser, compressor, evaporator, and associated piping and controls. Environmentally safe refrigerants are used in these chillers.

Water-Cooled Chiller Refrigeration Unit

SCWS, Divisions 2 and 3, each contain one 100 percent water-cooled chiller refrigeration unit that functions to refrigerate chilled water to its design bases temperature of 41°F for supply to the HVAC users. These chillers are located in dedicated rooms of the SBs. Each chiller contains a condenser, compressor, evaporator, and associated piping and controls. Environmentally safe refrigerants are used in these chillers.

Diaphragm Expansion Tank

Each SCWS division contains a diaphragm expansion tank with a nitrogen fill connection in each of the SBs. These tanks are provided with overpressure protection.

Cooling Coils

Multiple HVAC cooling coils in each division receive chilled water for heat removal from selected HVAC users.

Safety Valves

A safety valve located in each SCWS division protects the chilled water closed loop against high pressure.

Chiller Bypass Valve

09.02.02-39g

The chiller bypass valve installed in the closed loop of each SWCS division varies flow returning to the chiller to prevent freezing at the evaporator coil. Upstream filters are provided as a precaution to protect downstream control valves which contain internals sensitive to particle trapping.

09.02.02-45

Under seismic or post-accident conditions, when demineralized water may be unavailable for SCWS makeup, a manual connection to the fire water distribution system is available to provide a seismic makeup source within a time frame consistent with the SCWS expansion tank capacity to accommodate expected out-leakage from the system for seven days.

09.02.02-47 A mechanical or electrical failure of the running SCWS pump results in a transfer to the standby pump.

09.02.02-52 Each refrigeration chiller in the four divisions of the SCWS has three 50 percent capacity compressors to provide sufficient operating redundancy and flexibility in the event of a compressor failure. The two remaining chiller compressors provide 100 percent capacity.

09.02.02-54 To allow divisional maintenance (e.g., maintenance on emergency diesel generators), the required SCWS safety-related components are alternately fed from the adjacent division to provide adequate cooling of certain safety-related components during a design basis event.

9.2.8.4 Safety Evaluation

- The SCWS is designed as Seismic Category I as described in Section 3.2 to operate in all plant modes of operation including design basis events. The SCWS divisions are located in SBs 1 to 4, respectively. The SBs are designed to withstand the effects of earthquakes, tornadoes, hurricanes, floods, external missiles, and other natural phenomena. Section 3.3, Section 3.4, Section 3.5, Section 3.7(B), and Section 3.8 provide the bases for the adequacy of the structural design of these buildings.

- The SCWS is designed to remain functional after a safe shutdown earthquake. Section 3.7(B).2 and Section 3.9(B) provide the design loading conditions that were considered. Section 3.5, Section 3.6, and Section 9.5.1 provide the hazards analyses to make sure that a safe shutdown, as outlined in Section 7.4, can be achieved and maintained.

- A four train design of the SCWS fulfills the single failure criteria. Redundant safety systems (one per SB) are strictly separated within the SBs into four divisions. This divisional separation is provided for electrical and mechanical safety systems. The four divisions of safety-related systems are consistent with an N+2 safety concept. The four SCWS trains are backed up by the EDGs. Two of these trains, in Divisions 1 and 4, are also backed up by the SBO diesels.

- Structures, systems and components important to safety in the SCWS are not shared with any other co-located nuclear reactor units.

- Preoperational testing of the SCWS is performed as described in Chapter 14.0. Periodic inservice functional testing is done in accordance with Section 9.2.8.5.

- Section 6.6 provides the ASME Boiler and Pressure Vessel (BPV) Code, Section XI (Reference 1) requirements that are appropriate for the SCWS.

- Section 3.2 delineates the quality group classification and seismic category applicable to the safety-related portion of this system. Table 9.5.4-1 shows that the components meet the design and fabrication codes given in Section 3.2. All the power supplies and control functions necessary for safe function of the SCWS are Class IE, as described in Chapter 7 and Chapter 8.

- Cooling diversity is created between the load heat sinks of Divisions 1 and 4, and Divisions 2 and 3. Division 1 and 4 chillers are air cooled, and Division 2 and 3 chillers are water cooled by the component cooling water system (CCWS).

09.02.02-51

- A process radiation monitor is provided in Trains 1 and 4 of the SCWS, downstream of the LHSI pump mechanical seal heat exchanger to monitor for possible leakage of radioactive fluid from the heat exchanger. Otherwise, migration of radioactive material from potentially radioactive systems is prevented with a minimum of two heat exchanger barriers. Radiation monitors are in the CCWS to detect radioactive contamination entering and exiting the system.

9.2.8.5 Inspection and Testing Requirements

Prior to initial plant startup, a comprehensive performance test will be performed to verify that the design performance of the system and individual components is attained. Refer to Section 14.2, Test #052, for initial plant testing of the SCWS.

After the plant is brought into operation, periodic tests and inspections of the SCWS components and subsystems are performed to verify proper operation. Scheduled tests and inspections are necessary to verify system operability.

9.2.8.6 Instrumentation Requirements

The SCWS system is controlled by the safety automation system (SAS). The normal indication, manual control, and alarm functions are provided by the process information and control system (PICS).

System pressure is monitored with the aid of two pressure measurements. The two measurements are combined in one measuring point. If the pressure falls below a set limit, an alarm is issued for operators to check nitrogen charge or provide makeup with demineralized water.

If the pressure falls below a second set limit, one of the following measures is initiated automatically:

- Chilled water system “Protection OFF” alarms.

- Refrigeration unit shuts down.

Figure 9.2.8-1—Safety Chilled Water System Diagram
Sheet 1 of 4

09.02.02-36;
09.02.02-39f;
09.02.02-45

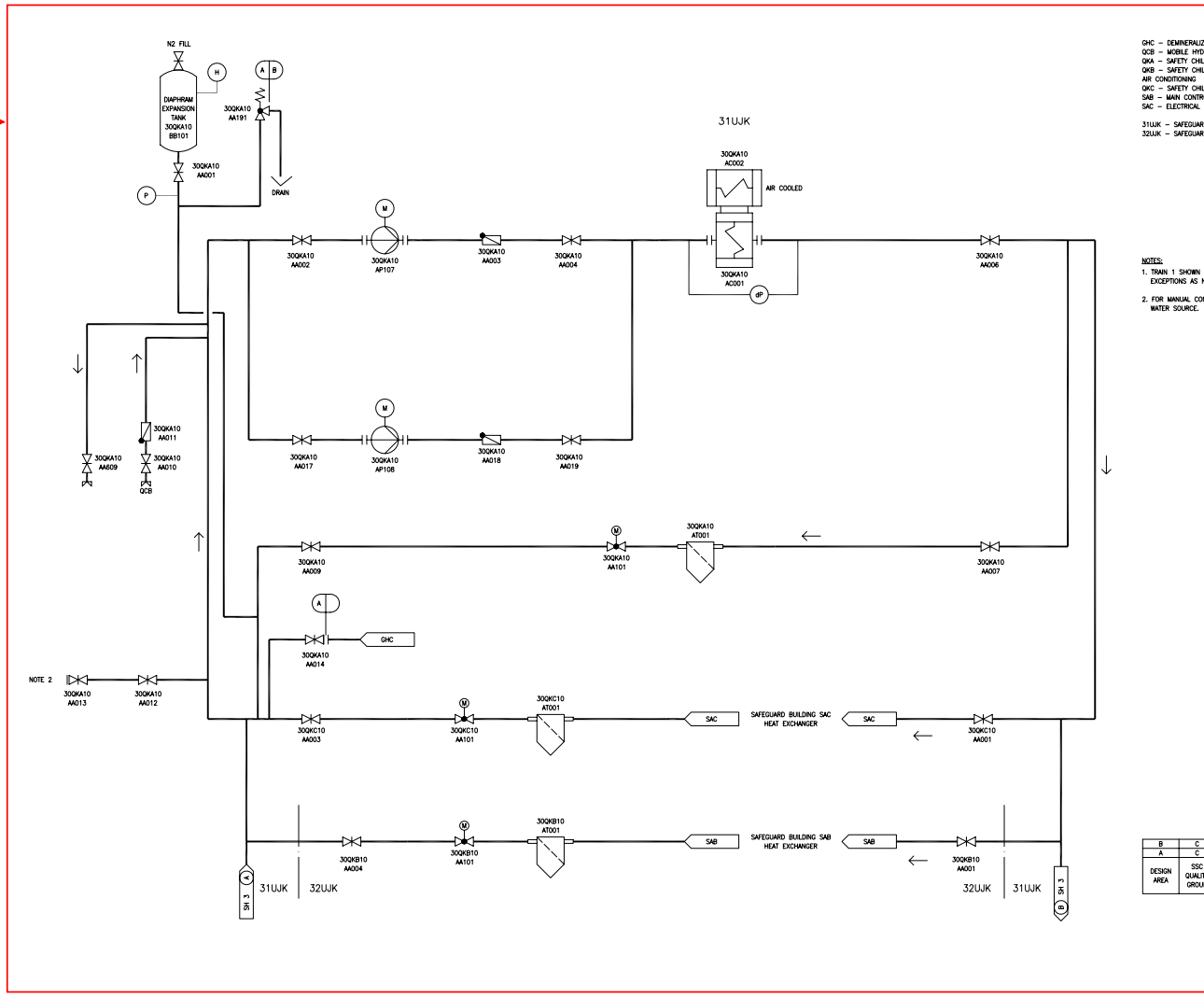

Figure 9.2.8-1—Safety Chilled Water System Diagram
Sheet 2 of 4

09.02.02-36;
09.02.02-39f;
09.02.02-45

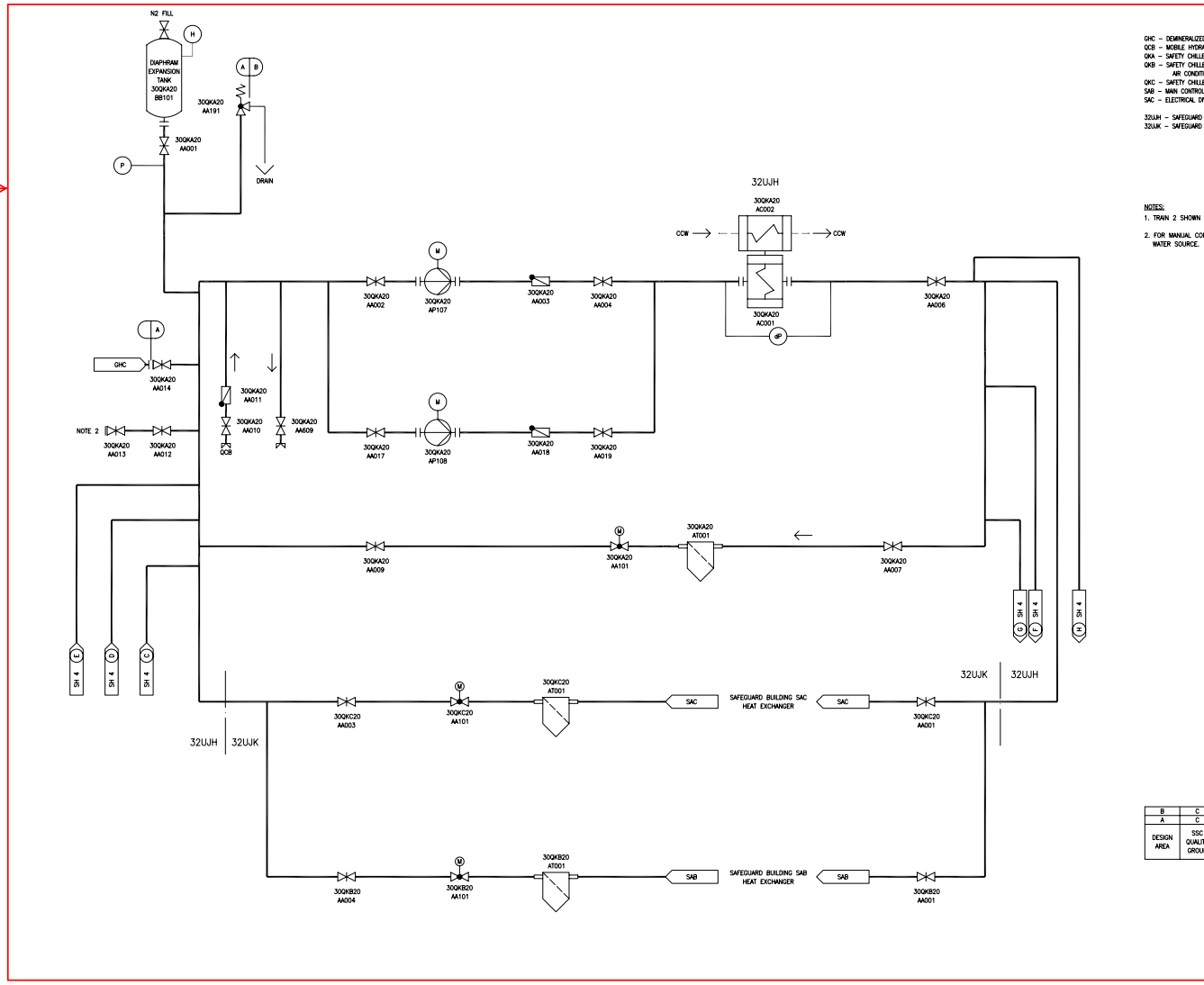

Figure 9.2.8-1—Safety Chilled Water System Diagram
Sheet 3 of 4

09.02.02-39f;
09.02.02-51

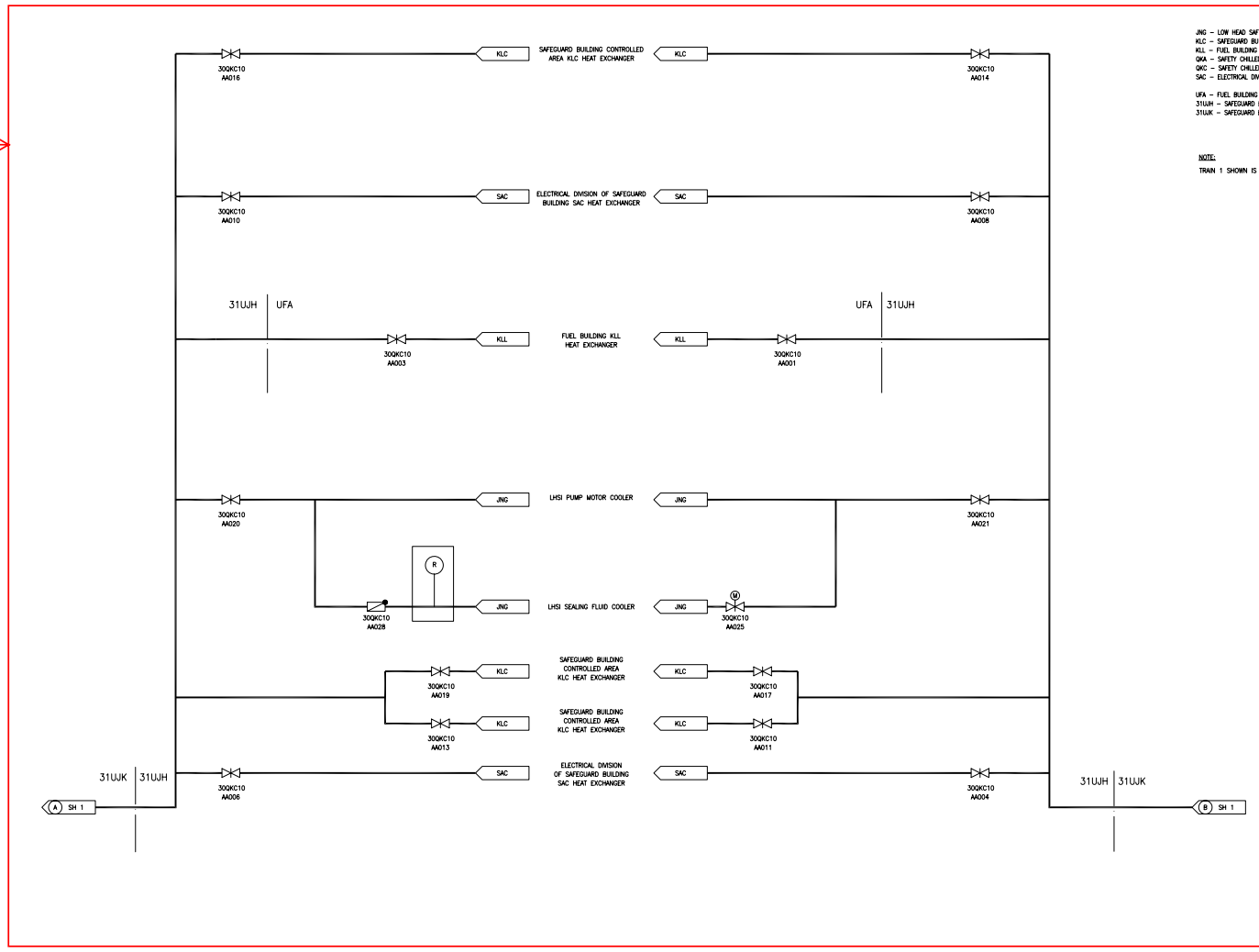

Figure 9.2.8-1—Safety Chilled Water System Diagram
Sheet 4 of 4

09.02.02-39f

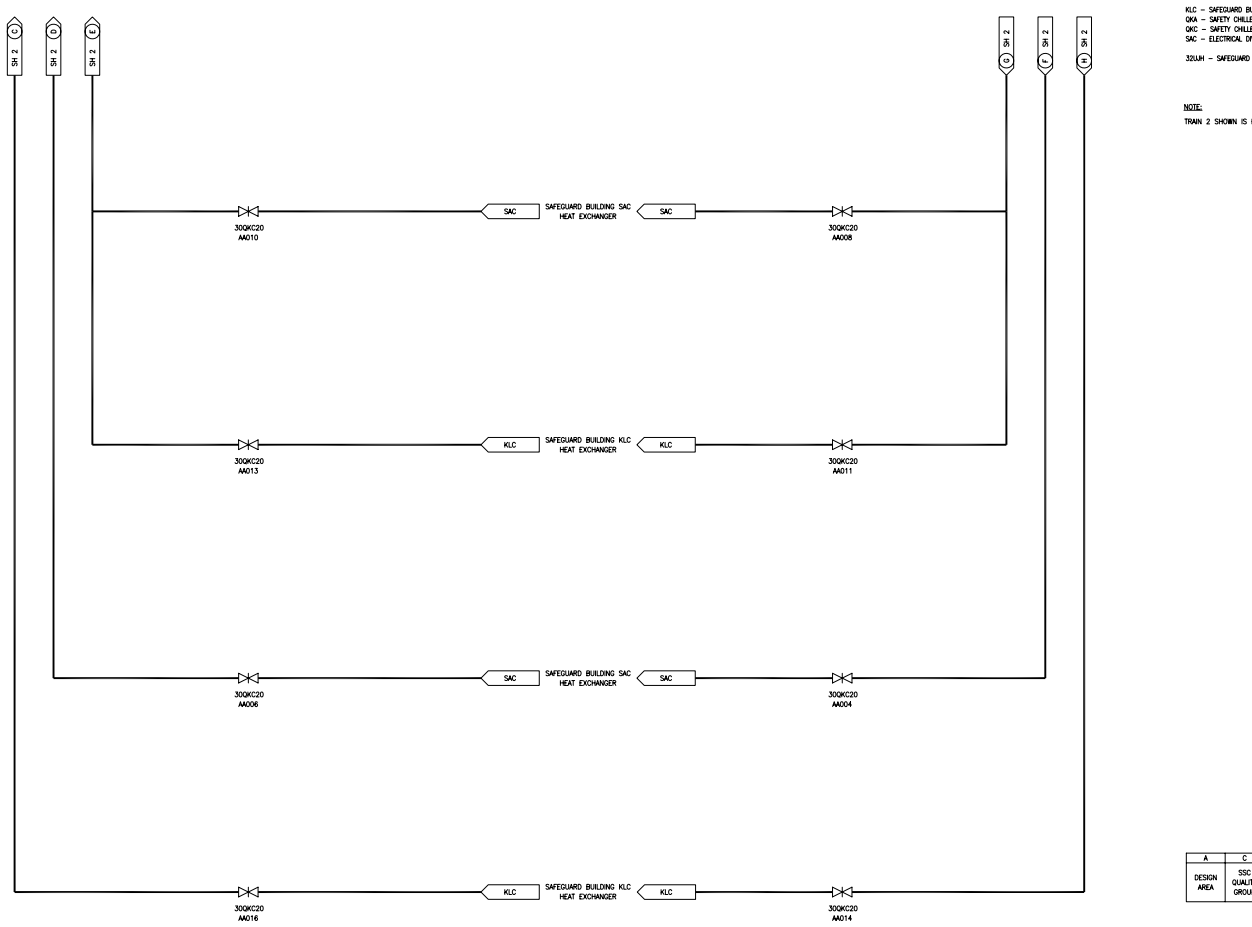

B 3.7 PLANT SYSTEMS

B 3.7.9 Safety Chilled Water (SCW) System

BASES

BACKGROUND

The SCW System provides a heat sink for the removal of process and operating heat from safety related components during an anticipated operational occurrence (AOO) or postulated accident. During normal operation, and a normal shutdown, the SCW System also provides this function for the associated safety related systems. The safety related function is covered by this LCO.

The SCW System consists of four independent trains. Each train consists of a chiller refrigeration unit (three 50% compressors per unit), chilled water pumps (two 100% pumps), surge tank, piping, valving, and instrumentation. Heat is rejected to the system chilled water as it passes through the cooling coils of the system users. This heat is rejected from the system as it is pumped through the train chiller refrigeration units. Trains 1 and 4 reject this energy to ambient via air cooled condensers while trains 2 and 3 have condensers cooled by the Component Cooling Water (CCW) System. Each refrigeration chiller in the four divisions of the SCWS has three 50 percent capacity compressors to provide sufficient operating redundancy and flexibility in the event of a compressor failure. The two remaining chiller compressors provide 100 percent capacity.

09.02.02-52

The SCW System is normally operating and cools the Control Room Air Conditioning System (CRACS), Safeguards Building Ventilation System Electrical Division (SBVSED), and the train 1 and 4 Low Head Safety Injection (LHSI) pump motor and seal coolers. The combined HVAC function of the SBVSED and SCW systems is backed by a non-safety related, 100% capacity maintenance train which is cooled by the Operational Chilled Water System.

Following a loss of offsite power, previously running SCW trains return to operation once the emergency diesel generator is started and the associated AC electrical power division is re-energized. To allow divisional maintenance (e.g., maintenance on emergency diesel generators), the required SCWS safety-related components are alternately fed from the adjacent division to provide adequate cooling of certain safety-related components during a design basis event.

09.02.02-54

The SCW System operation is discussed in FSAR Section 9.2.8 (Ref. 1).