1.0 OBJECTIVE

Perform the structural analyses of the Energy*Solutions* 3-60B Cask under normal conditions of transport (NCT), using a 3-dimensional finite element model.

2.0 INTRODUCTION

Energy*Solutions* 3-60B Cask (Reference 1) is designed as a Type B radioactive-material shipping package. To be certified by the U.S.N.R.C., the cask needs to meet the requirements of 10 CFR 71 (Reference 2) and follow the guidelines of U.S.N.R.C. Regulatory Guide 7.8 (Ref. 3).

This document presents the structural analysis of the 3-60B Cask for the normal conditions of transport (NCT). The analyses in this document are performed using the finite element modeling techniques. A three-dimensional model of the cask that includes all its major components has been employed in the analyses. Temperature dependent material properties of the major components of the cask are used in the analyses.

The results of the analyses for various load cases are presented pictorially in stress intensity contour plots as well as digital data format.

3.0 REFERENCES

1. Energy*Solutions* Drawing No. C-002-165024-001, Rev.0, 3-60B Cask General Arrangement and Details.

2. Code of Federal Regulations, Title 10, Part 71, Packaging and Transportation of Radioactive Material, January 2003.

3. U.S. NRC Regulatory Guide 7.8, Revision 1, March 1989, Load Combinations for the Structural Analysis of Shipping Casks for Radioactive Material.

4. ASME Boiler & Pressure Vessel Code, Section II, Part D, Materials, The American Society of Mechanical Engineers, New York, NY, 2005.

5. NUREG 0481/SAND77-1872, An Assessment of Stress-Strain Data Suitable for Finite Element Elastic-Plastic Analysis of Shipping Containers, Sandia National Laboratories, 1978.

6. U.S. NRC Regulatory Guide 7.6, Revision 1, Design Criteria for the Structural Analysis of Shipping Cask Containment Vessels, 1978.

7. ANSYS, Rev. 911.0, Computer Software, ANSYS Inc., Canonsburg, PA, 20052007.

8. Duratek EnergySolutions Document TH-022, Rev.01, Steady State Thermal Analyses of the 3-60B Cask Using a 3-D Finite Element Model.

4.0 MATERIAL PROPERTIES

Material	Temp. (°F)	Strength (ksi) Yield (S_y)	Ultimate (S_u)	Membrane Allowable (S_m)	Young's Modulus (10^6 psi)	Coefficient of Thermal Expansion (10^{-6} in/in)
		(1)	(1)	(1)	(1)	(1)
ASTM A240 Type 304L	-20	25.0	70.0	16.7	28.8	-
	70	25.0	70.0	16.7	28.3	8.5
	100	25.0	70.0	16.7	-	8.6
	200	21.4	66.1	16.7	27.5	8.9
	300	19.2	61.2	16.7	27.0	9.2
	400	17.5	58.7	15.8	26.4	9.5
	500	16.4	57.5	14.7	25.9	9.7
		(1)	(1)	(1)	(1)	(1)
ASTM A240 Gr. 45 & ASTM A182 Gr. F45	-20	45.0	87.0	24.9	28.8	-
	70	45.0	87.0	24.9	28.3	8.5
	100	45.0	87.0	24.9	-	8.6
	200	37.5	86.4	24.7	27.5	8.9
	300	33.0	81.6	23.3	27.0	9.2
	400	29.9	78.5	22.4	26.4	9.5
	500	27.8	76.4	21.8	25.9	9.7
		(1)	(1)	(1)	(1)	(1)
ASTM A354 Gr. BD (Lid Bolts)	-20	130	150	30	29.7	-
	70	130	150	30	29.2	6.4
	100	130	150	30	-	6.5
	200	119.1	150	30	28.6	6.7
	300	115	150	30	28.1	6.9
	400	111	150	30	27.7	7.1
	500	105.9	150	30	27.1	7.3
		(2)			(2)	(2)
ASTM B29 Lead	-20	-	-	-	2.43	15.65
	70	5	-	-	2.27	16.06
	100	-	-	-	2.21	16.22
	200	-	-	-	2.01	16.70
	300	-	-	-	1.85	17.33
	400	-	-	-	1.70	18.16
	500	-	-	-	1.52	19.12

Notes:

(1) From ASME B&PV Code 2004, Section II, Part D (Reference 4).

(2) From NUREG/CR 0481 (Reference 5)

5.0 ALLOWABLE STRESSES

Material →		ASTM A240 Type 304L	ASTM A182 Gr.F45 & A240 Gr. 45	ASTM A354 Gr. BD
Yield Stress, S_y (psi)		25,000(1)	45,000(1)	130,000(1)
Ultimate Stress, S_u (psi)		70,000(1)	87,000(1)	150,000(1)
Design Stress Intensity, S_m (psi)		16,700(1)	24,900(1)	30,000(1)
Normal Conditions	Membrane Stress	16,700(2)	24,900(2)	60,000(2)
	Mem. + Bending Stress	25,050(2)	37,350(2)	90,000(2)
	Peak Stress	50,100(3)	74,700(3)	150,000(3)
Hypothetical Accident Conditions	Membrane Stress	40,080(4)	59,760(4)	105,000(4)
	Mem. + Bending Stress	60,120(4)	87,000(4)	150,000(4)
	Peak Stress	140,000(5)	174,000(5)	300,000(5)

Notes:

(1) From ASME B&PV Code 2004, Section II, Part D (Reference 4).

(2) Established from Regulatory Guide 7.6 (Reference 6).

(3) Regulatory Guide 7.6 (Reference 6) does not provide any criteria. These allowable values have been established here based on the ASME, Section III, Division 3, WB-3200 (Reference 4) criteria.

(4) Regulatory Guide 7.6 (Reference 6) does not provide any criteria. ASME B&PV Code, Section III, Appendix F has been used to establish these criteria.

(5) Regulatory Guide 7.6 (Reference 6) does not provide any criteria. The ASME Section III, Division 3, WB-3200 criteria of $2S_a$ @ 10 cycles results in an unreasonably high stress allowable. This criterion is conservatively set to be $2S_u$ for limiting the peak stresses.

5.0 MODEL DESCRIPTION

The structural analyses of the 3-60B Cask under NCT have been performed using finite element modeling techniques. ANSYS finite element analysis code (Ref. 7) has been employed to perform the analyses. Since the lid of the cask is attached to the body using 16

bolts, the cask geometry has a cyclic symmetry every 11.25° of the circumference. Therefore, an 11.25° model of the cask is made using 3-dimensional 8-node structural solid elements (ANSYS SOLID185) to represent the major components of the cask, the cask body, the lid, and the bolts. The fire shield does not provide any structural strength to the cask. Therefore, it is not included in the model.

The poured lead in the body of the cask is not bonded to the steel. It is free to slide over the steel surface. Therefore, the interface between the lead and the steel is modeled by a pair of contact (CONTA174) and target (TARGE170) elements. These elements allow the lead to slide over the steel at the same time prevent it from penetrating the steel surface. The transition from a coarse mesh to a finer mesh in various parts of the model is also modeled using these elements.

Figure 1 shows the outline of the model depicting the material numbering. Figure 2 shows the finite element grid of the lid, seal plate, and the bolts. Figure 3 shows the finite element grid of the cask body without the lead and Figure 4 shows that of the lead. The interface between various components of the cask is modeled by target-contact surface definition. Figure 5 shows target surfaces of various contact-target pairs. The printout of the pertinent model quantities is included in Appendix 1.

Boundary Conditions

For the analyses of the 3-60B Cask under various NCT loading cases, it is assumed that the cask is resting on the upper impact limiter in the vertical orientation, because in this orientation the payload applies deadweight loading, in addition to the internal pressure loading, on the lid closure, which is the most vulnerable part of the cask. The model is conservatively restrained in the vertical direction at the skirt instead of the entire bearing surface of the upper impact limiter. Also, since the model represents an 11.25° circumferential symmetry, the nodes on the cut-planes are restrained from displacement normal to these planes.

Loading

For various NCT loading cases, the loading on the model include the following, as applicable.

Deadweight

The deadweight of the cask is included in the analyses as the body load in the finite element model subjected to the acceleration due to gravity. The deadweight of the lower impact limiter is included as the uniform pressure on the surface where the impact limiter contacts the cask. The deadweight of the payload is included as the uniform pressure on the lid inside surface.

Mass of each Impact Limiter = 3,800 lb

Inside Radius of the Impact Limiter = 12 in

Outside Radius of the Cask = 25.5 in

Pressure on the cask due to impact limiter weight,

$p_{I.L.} = 3{,}800/[p\times(25.5^2 - 12^2)] = 2.39$ psi

Payload Mass = 9,500 lb

Lid Radius = 17.5 in

Pressure on the lid surface due to payload weight,

$p_{lid} = 9{,}500/(p\times17.5^2) = 9.874$ psi

Because of the segmentation of arc length in the finite element models, the mass of the model is always lower than the actual mass. To account for this, as well as to include the mass of miscellaneous items not included in the model, an adjustment is made in the value of acceleration due to gravity.

Cask Body Mass = 80,000 – 9,500 -2×3,800 = 62,900 lb

Mass of the FEM = 32×1,775. 6 = 56,819 lb

Use acceleration due to gravity = 62,900/56,819 = 1.107g

Internal Pressure

The cask internal pressure under various NCT loading conditions is applied as the uniform pressure over the nodes representing the cavity of the cask. The external pressure, if applicable, is applied over the nodes representing the entire exterior surface of the cask.

Temperature

The temperature distribution under various NCT loading conditions is obtained from the thermal analyses performed in Reference 8 and is applied as the nodal temperature in the finite element model.

6.0 ANALYSES

The finite element model described in Section 5.0 is analyzed for the following loading conditions:

1. Hot Environment – This load case is based on the requirements of 10 CFR 71.71 (c) (1). The finite element model is subjected to the following loading:

Cask Deadweight	✓

Upper Impact Limiter Deadweight	✓
Payload Deadweight	✓
Temperature from Reference 8	Load Case 1
Internal Pressure	35 psi
External Pressure	No

See Figure 6 for the plot of the temperature profile and pressure distribution used for this load step.

2. Cold Environment – This load case is based on the requirements of 10 CFR 71.71 (c) (2). The finite element model is subjected to the following loading:

Cask Deadweight	✓
Upper Impact Limiter Deadweight	✓
Payload Deadweight	✓
Temperature from Reference 8	Load Case 2
Internal Pressure	35 psi
External Pressure	No

See Figure 7 for the plot of the temperature profile and pressure distribution used for this load step.

3. Normal Hot - This load case is based on the requirements of 10 CFR 71.71 (b). The finite element model is subjected to the following loading:

Cask Deadweight	✓
Upper Impact Limiter Deadweight	✓
Payload Deadweight	✓
Temperature from Reference 8	Load Case 3
Internal Pressure	35 psi
External Pressure	No

See Figure 8 for the plot of the temperature profile and pressure distribution used for this load step.

4. Normal Cold - This load case is based on the requirements of 10 CFR 71.71 (b). The finite element model is subjected to the following loading:

Cask Deadweight	✓
Upper Impact Limiter Deadweight	✓
Payload Deadweight	✓
Temperature from Reference 8	Load Case 4
Internal Pressure	35 psi
External Pressure	No

See Figure 9 for the plot of the temperature profile and pressure distribution used for this load step.

5. Maximum Normal Operating Pressure - This load case is analyzed to obtain the load-controlled stresses in the cask under MNOP. The finite element model is subjected to the following loading:

Cask Deadweight	✓
Upper Impact Limiter Deadweight	✓
Payload Deadweight	✓
Temperature from Reference 8	No70°F
Internal Pressure	35 psi
External Pressure	No

See Figure 10 for the plot of the temperature profile and pressure distribution used for this load step.

6. Reduced External Pressure - This load case is based on the requirements of 10 CFR 71.71 (c)(3). The finite element model is subjected to the following loading:

Cask Deadweight	✓
Upper Impact Limiter Deadweight	✓

Payload Deadweight	✓
Temperature from Reference 8	Load Case 3
Internal Pressure	50 psi
External Pressure	No

See Figure 11 for the plot of the temperature profile and pressure distribution used for this load step.

7. Increased External Pressure & Immersion - This load case is based on the requirements of 10 CFR 71.71 (c)(4). This load case also envelopes the requirement of 10 CFR 71.73(c)(6). The finite element model is subjected to the following loading:

Cask Deadweight	✓
Upper Impact Limiter Deadweight	✓
Payload Deadweight	✓
Temperature from Reference 8	-20°F
Internal Pressure	No
External Pressure	25 psi

See Figure 12 for the plot of the temperature profile and pressure distribution used for this load step.

7.0 RESULTS

The results obtained from various load case analyses include displacements and stress intensities at the nodal points of the finite element model. The total printout from all the load cases is included in Appendix 2. Stress intensity contour plots are presented in Figures 13 through 19. The stress intensities in various components of the 3-60B Cask under these loading conditions are tabulated in Tables 1 through 7. It should be noted that the maximum stress intensities obtained from the finite element models are peak stresses, as classified by the ASME code. If the magnitude of these S.I.s are smaller than the membrane stress allowable values for the material, the peak stress values from the finite element model results are reported as membrane and membrane plus bending as well. However, if these values are larger than the membrane stress allowable values, stresses are linearized over the cross-section, per ASME code, and the results obtained from this operation are listed in Tables 1 through 7. The stress intensity values are also compared with the corresponding allowable values in these tables. A factor of safety is calculated for every component for each load case.

A factor of safety value of 1.0 or larger indicates that the stress intensity is acceptable for the loading considered.

The results of the analyses show that the stresses for all the normal operating load cases are well within the allowable values.

8.0 ANSYS PRINTOUT AND DATA FILES

The printout of the important data from the program is included with this document in electronic form as Appendix 1. The following is the directory of the data on the CDR.

```
Volume in drive F is My Disc
 Volume Serial Number is 1EC0-CB0E

 Directory of F:\

12/07/2007  11:32 AM           32,821 Model.txt
12/13/2007  02:32 PM           91,648 Result Summary ST-501, Rev. 1.doc
12/05/2007  08:24 AM       11,730,944 file.db
11/16/2007  12:06 PM          211,002 file.s01
11/16/2007  12:09 PM          211,002 file.s02
11/16/2007  12:12 PM          211,002 file.s03
11/16/2007  12:14 PM          211,002 file.s04
11/16/2007  12:51 PM          113,150 file.s05
11/16/2007  04:08 PM          211,002 file.s06
11/16/2007  12:59 PM          163,396 file.s07
11/16/2007  04:09 PM              151 file.stat
11/16/2007  12:06 PM        5,570,560 ls1.rst
11/16/2007  04:35 PM            3,125 ls1Forging.lis
11/16/2007  04:38 PM            3,125 ls1Outer-shell.lis
11/16/2007  04:10 PM          243,321 ls1post.out
11/16/2007  12:10 PM        5,439,488 ls2.rst
11/16/2007  04:43 PM            3,125 ls2Forging.lis
11/16/2007  04:10 PM          240,152 ls2post.out
11/16/2007  12:13 PM        5,570,560 ls3.rst
11/16/2007  04:10 PM          240,152 ls3post.out
11/16/2007  12:15 PM        5,439,488 ls4.rst
11/16/2007  04:10 PM          240,152 ls4post.out
11/16/2007  12:50 PM       15,204,352 ls5.rst
11/16/2007  04:10 PM          240,152 ls5post.out
11/16/2007  04:09 PM        5,636,096 ls6.rst
11/16/2007  04:30 PM          238,440 ls6post.out
11/16/2007  12:58 PM        8,060,928 ls7.rst
11/16/2007  05:12 PM            3,125 ls7Baseplates.lis
11/16/2007  05:09 PM            3,125 ls7Forging.lis
11/16/2007  04:11 PM          241,009 ls7post.out
               30 File(s)    65,807,595 bytes
                0 Dir(s)              0 bytes free
```

9.0 APPENDICES

Appendix 1 Print-out of the ANSYS model data input

Appendix 2 Electronic data on CDROM

Tables

(7 Pages)

Table 1

Stress Intensities in 3-60B Cask under Hot Environment Loading

Component	Stress Category	Allowable S.I. (psi)	Calculated S.I.(1) (psi)	F.S.(2)
Bolting Ring	P_m	24,900	14,040(3)	1.77
	$P_m + P_b$	37,350	24,120(3)	1.55
	F	74,700	24,127(3)	3.10
Inner Shell	P_m	24,900	7,558	3.30
	$P_m + P_b$	37,350	7,558	4.94
	F	74,700	7,558	9.88
Outer Shell	P_m	16,700	9,727(4)	1.72
	$P_m + P_b$	25,050	17,720(4)	1.41
	F	50,100	17,720(4)	2.83
Lid	P_m	16,700	4,699	3.55
	$P_m + P_b$	25,050	4,699	5.33
	F	50,100	4,699	10.66
Base Plates	P_m	16,700	12,237	1.36
	$P_m + P_b$	25,050	12,237	2.05
	F	50,100	12,237	4.09
Seal Plates	$P_m + P_b$	25,050	12,223	2.05
Bolts	P_m	60,000	20,871	2.87
	$P_m + P_b$	90,000	20,871	4.31
	F	150,000	20,871	7.19

Notes:

(1) Unless otherwise indicated in this column, the peak stress intensity (F) values have been conservatively reported as P_m and $P_m + P_b$ stress intensities.

(2) Factor of Safety, F.S. = (Allowable S.I.) / (Calculated S.I.)

(3) See Figure 20 for the location of the section over which the stresses are linearized.

(4) See Figure 21 for the location of the section over which the stresses are linearized.

Table 2

Stress Intensities in 3-60B Cask under Cold Environment Loading

Component	Stress Category	Allowable S.I. (psi)	Calculated S.I.(1) (psi)	F.S.(2)
Bolting Ring	P_m	24,900	9,477(3)	2.63
	$P_m + P_b$	37,350	15,230(3)	2.45
	F	74,700	15,256(3)	4.90
Inner Shell	P_m	24,900	9,713	2.56
	$P_m + P_b$	37,350	9,713	3.85
	F	74,700	9,713	7.69
Outer Shell	P_m	16,700	1,731	9.65
	$P_m + P_b$	25,050	1,731	14.47
	F	50,100	1,731	28.94
Lid	P_m	16,700	7,346	2.27
	$P_m + P_b$	25,050	7,346	3.41
	F	50,100	7,346	6.82
Base Plates	P_m	16,700	11,264	1.48
	$P_m + P_b$	25,050	11,264	2.22
	F	50,100	11,264	4.45
Seal Plates	$P_m + P_b$	25,050	12,696	1.97
Bolts	P_m	60,000	9,941	6.04
	$P_m + P_b$	90,000	9,941	9.05
	F	150,000	9,941	15.09

Notes:

(1) Unless otherwise indicated in this column, the peak stress intensity (F) values have been conservatively reported as Pm and Pm + Pb stress intensities.

(2) Factor of Safety, F.S. = (Allowable S.I.) / (Calculated S.I.)

(3) See Figure 22 for the location of the section over which the stresses are linearized.

Table 3

Stress Intensities in 3-60B Cask under Normal Hot Loading

Component	Stress Category	Allowable S.I. (psi)	Calculated S.I.(1) (psi)	F.S.(2)
Bolting Ring	P_m	24,900	13,574	1.83
	$P_m + P_b$	37,350	13,574	2.75
	F	74,700	13,574	5.50
Inner Shell	P_m	24,900	4,078	6.11
	$P_m + P_b$	37,350	4,078	9.16
	F	74,700	4,078	18.32
Outer Shell	P_m	16,700	9,789	1.71
	$P_m + P_b$	25,050	9,789	2.56
	F	50,100	9,789	5.12
Lid	P_m	16,700	2,700	6.19
	$P_m + P_b$	25,050	2,700	9.28
	F	50,100	2,700	18.56
Base Plates	P_m	16,700	6,982	2.39
	$P_m + P_b$	25,050	6,982	3.59
	F	50,100	6,982	7.18
Seal Plates	$P_m + P_b$	25,050	7,065	3.55
Bolts	P_m	60,000	10,976	5.47
	$P_m + P_b$	90,000	10,976	8.20
	F	150,000	10,976	13.67

Notes:

(1) Unless otherwise indicated in this column, the peak stress intensity (F) values have been conservatively reported as P_m and $P_m + P_b$ stress intensities.

(2) Factor of Safety, F.S. = (Allowable S.I.) / (Calculated S.I.)

Table 4

Stress Intensities in 3-60B Cask under Normal Cold Loading

Component	Stress Category	Allowable S.I. (psi)	Calculated S.I.(1) (psi)	F.S.(2)
Bolting Ring	P_m	24,900	11,512	2.16
	$P_m + P_b$	37,350	11,512	3.24
	F	74,700	11,512	6.49
Inner Shell	P_m	24,900	7,273	3.42
	$P_m + P_b$	37,350	7,273	5.14
	F	74,700	7,273	10.27
Outer Shell	P_m	16,700	1,298	12.87
	$P_m + P_b$	25,050	1,298	19.30
	F	50,100	1,298	38.60
Lid	P_m	16,700	5,863	2.85
	$P_m + P_b$	25,050	5,863	4.27
	F	50,100	5,863	8.55
Base Plates	P_m	16,700	8,131	2.05
	$P_m + P_b$	25,050	8,131	3.08
	F	50,100	8,131	6.16
Seal Plates	$P_m + P_b$	25,050	9,810	2.55
Bolts	P_m	60,000	7,900	7.59
	$P_m + P_b$	90,000	7,900	11.39
	F	150,000	7,900	18.99

Notes:

(1) Unless otherwise indicated in this column, the peak stress intensity (F) values have been conservatively reported as P_m and $P_m + P_b$ stress intensities.

(2) Factor of Safety, F.S. = (Allowable S.I.) / (Calculated S.I.)

Table 5

Stress Intensities in 3-60B Cask under Maximum Normal Operating Pressure

Component	Stress Category	Allowable S.I. (psi)	Calculated S.I.(1) (psi)	F.S.(2)
Bolting Ring	P_m	24,900	1,579	15.77
	$P_m + P_b$	37,350	1,579	23.65
	F	74,700	1,579	47.31
Inner Shell	P_m	24,900	426	58.45
	$P_m + P_b$	37,350	426	87.68
	F	74,700	426	175.35
Outer Shell	P_m	16,700	273	61.17
	$P_m + P_b$	25,050	273	91.76
	F	50,100	273	183.52
Lid	P_m	16,700	1,019	16.39
	$P_m + P_b$	25,050	1,019	24.58
	F	50,100	1,019	49.17
Base Plates	P_m	16,700	901	18.53
	$P_m + P_b$	25,050	901	27.80
	F	50,100	901	55.60
Seal Plates	$P_m + P_b$	25,050	2,103	11.91
Bolts	P_m	60,000	648	92.59
	$P_m + P_b$	90,000	648	138.89
	F	150,000	648	231.48

Notes:

(1) Unless otherwise indicated in this column, the peak stress intensity (F) values have been conservatively reported as P_m and $P_m + P_b$ stress intensities.

(2) Factor of Safety, F.S. = (Allowable S.I.) / (Calculated S.I.)

Table 6

Stress Intensities in 3-60B Cask under Reduced External Pressure

Component	Stress Category	Allowable S.I. (psi)	Calculated S.I.(1) (psi)	F.S.(2)
Bolting Ring	P_m	24,900	13,169	1.89
	$P_m + P_b$	37,350	13,169	2.84
	F	74,700	13,169	5.67
Inner Shell	P_m	24,900	6,420	3.88
	$P_m + P_b$	37,350	6,420	5.82
	F	74,700	6,420	11.64
Outer Shell	P_m	16,700	9,404	1.78
	$P_m + P_b$	25,050	9,404	2.66
	F	50,100	9,404	5.33
Lid	P_m	16,700	2,515	6.64
	$P_m + P_b$	25,050	2,515	9.96
	F	50,100	2,515	19.92
Base Plates	P_m	16,700	11,544	1.45
	$P_m + P_b$	25,050	11,544	2.17
	F	50,100	11,544	4.34
Seal Plates	$P_m + P_b$	25,050	5,882	4.26
Bolts	P_m	60,000	10,962	5.47
	$P_m + P_b$	90,000	10,962	8.21
	F	150,000	10,962	13.68

Notes:

(1) Unless otherwise indicated in this column, the peak stress intensity (F) values have been conservatively reported as P_m and $P_m + P_b$ stress intensities.

(2) Factor of Safety, F.S. = (Allowable S.I.) / (Calculated S.I.)

Table 7

Stress Intensities in 3-60B Cask under Increased External Pressure and Immersion

Component	Stress Category	Allowable S.I. (psi)	Calculated S.I.(1) (psi)	F.S.(2)
Bolting Ring	P_m	24,900	11,610(3)	2.14
	$P_m + P_b$	37,350	18,420(3)	2.03
	F	74,700	18,437(3)	4.05
Inner Shell	P_m	24,900	11,890	2.09
	$P_m + P_b$	37,350	11,890	3.14
	F	74,700	11,890	6.28
Outer Shell	P_m	16,700	2,406	6.94
	$P_m + P_b$	25,050	2,406	10.41
	F	50,100	2,406	20.82
Lid	P_m	16,700	6,925	2.41
	$P_m + P_b$	25,050	6,925	3.62
	F	50,100	6,925	7.23
Base Plates	P_m	16,700	10,510(4)	1.59
	$P_m + P_b$	25,050	15,070(4)	1.66
	F	50,100	15,814(4)	3.17
Seal Plates	$P_m + P_b$	25,050	13,854	1.81
Bolts	P_m	60,000	10,044	5.97
	$P_m + P_b$	90,000	10,044	8.96
	F	150,000	10,044	14.93

Notes:

(1) Unless otherwise indicated in this column, the peak stress intensity (F) values have been conservatively reported as P_m and $P_m + P_b$ stress intensities.

(2) Factor of Safety, F.S. = (Allowable S.I.) / (Calculated S.I.)

(3) See Figure 23 for the location of the section over which the stresses are linearized.

(4) See Figure 24 for the location of the section over which the stresses are linearized.

Figures

(24 Pages)

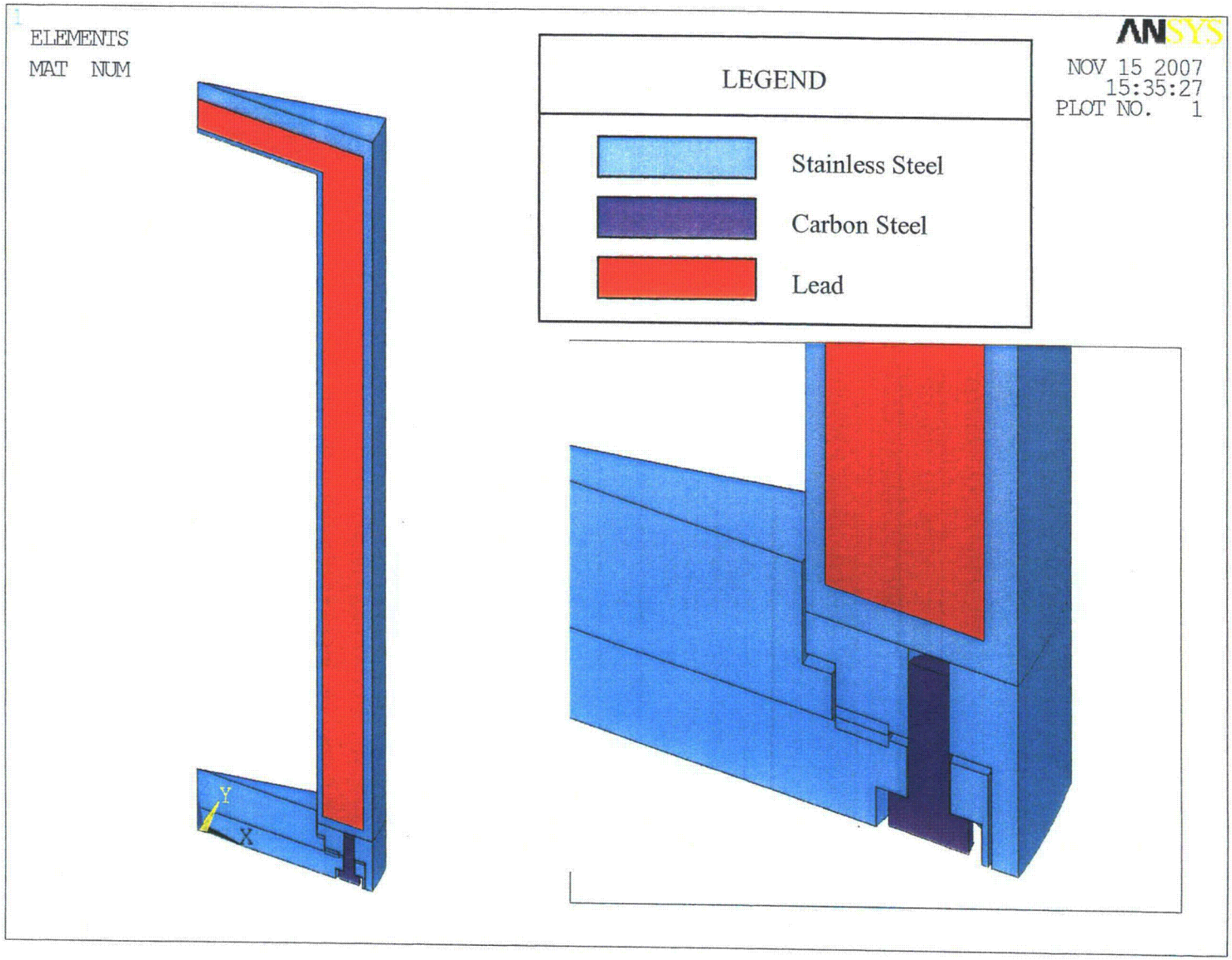

Figure 1
Finite Element Model of the 3-60B Cask Identifying the Components by Material Numbers

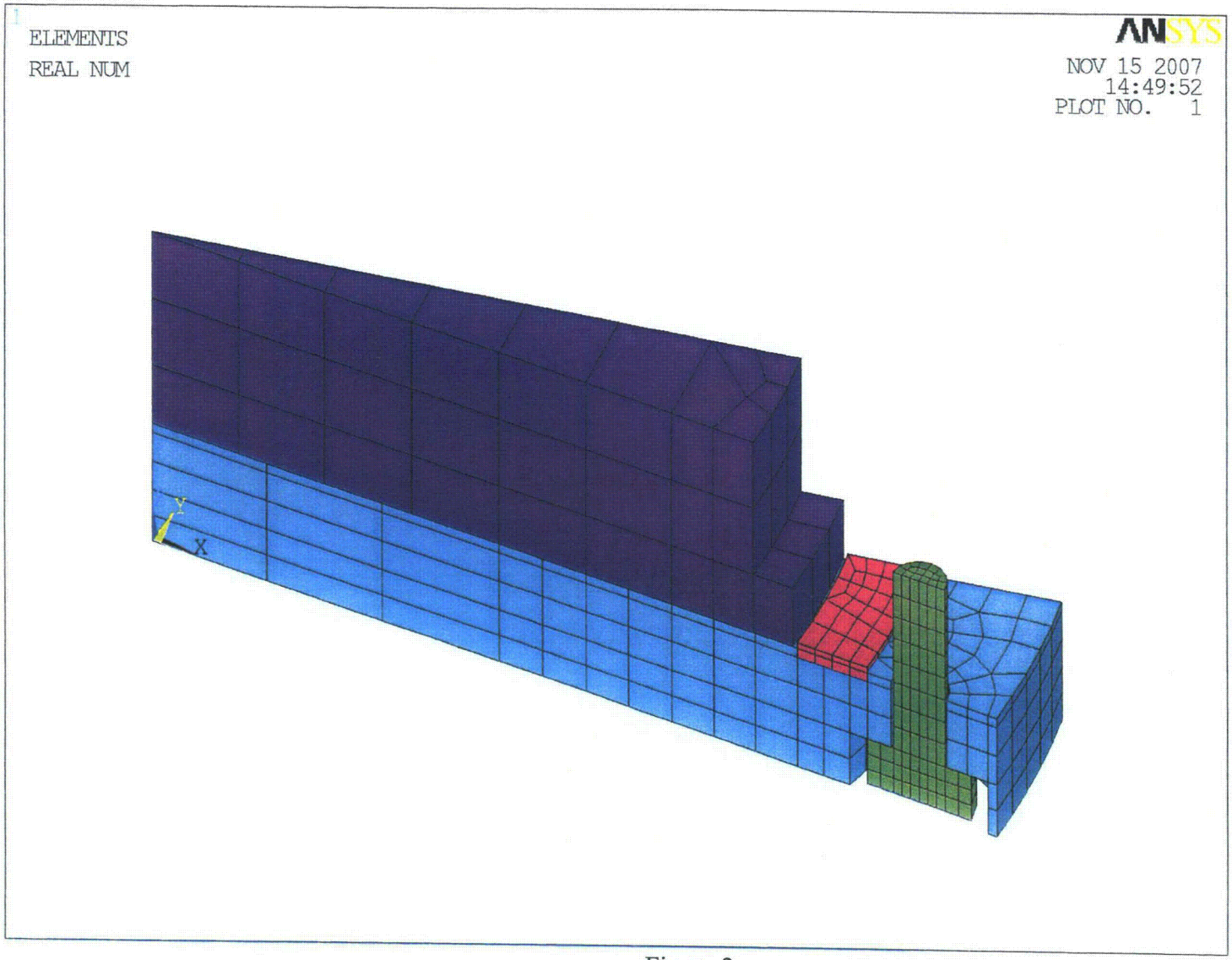

Figure 2
Finite Element Model of the Lid, Seal-Plate and Bolts

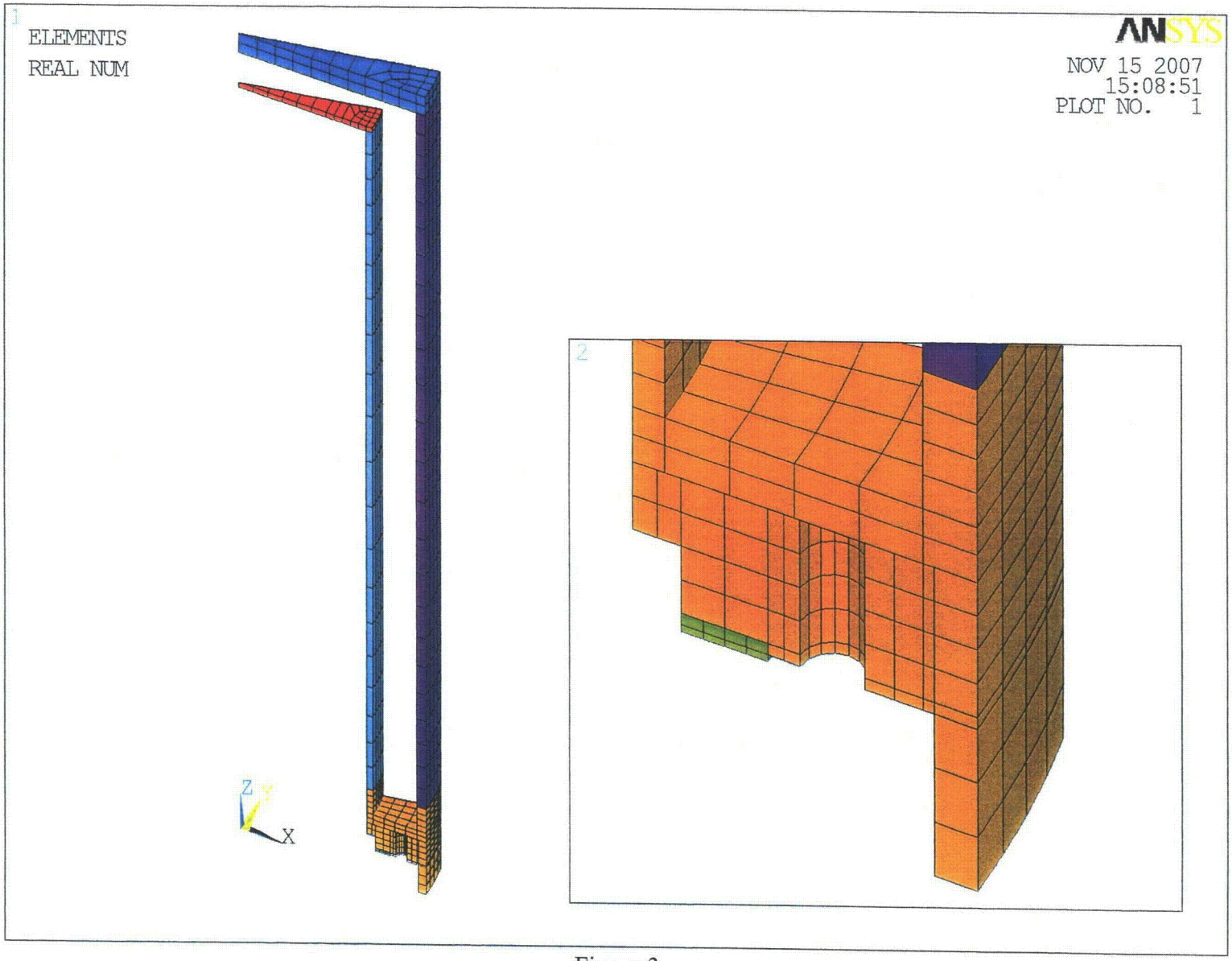

Figure 3
Finite Element Model of the Cask Body without Lead

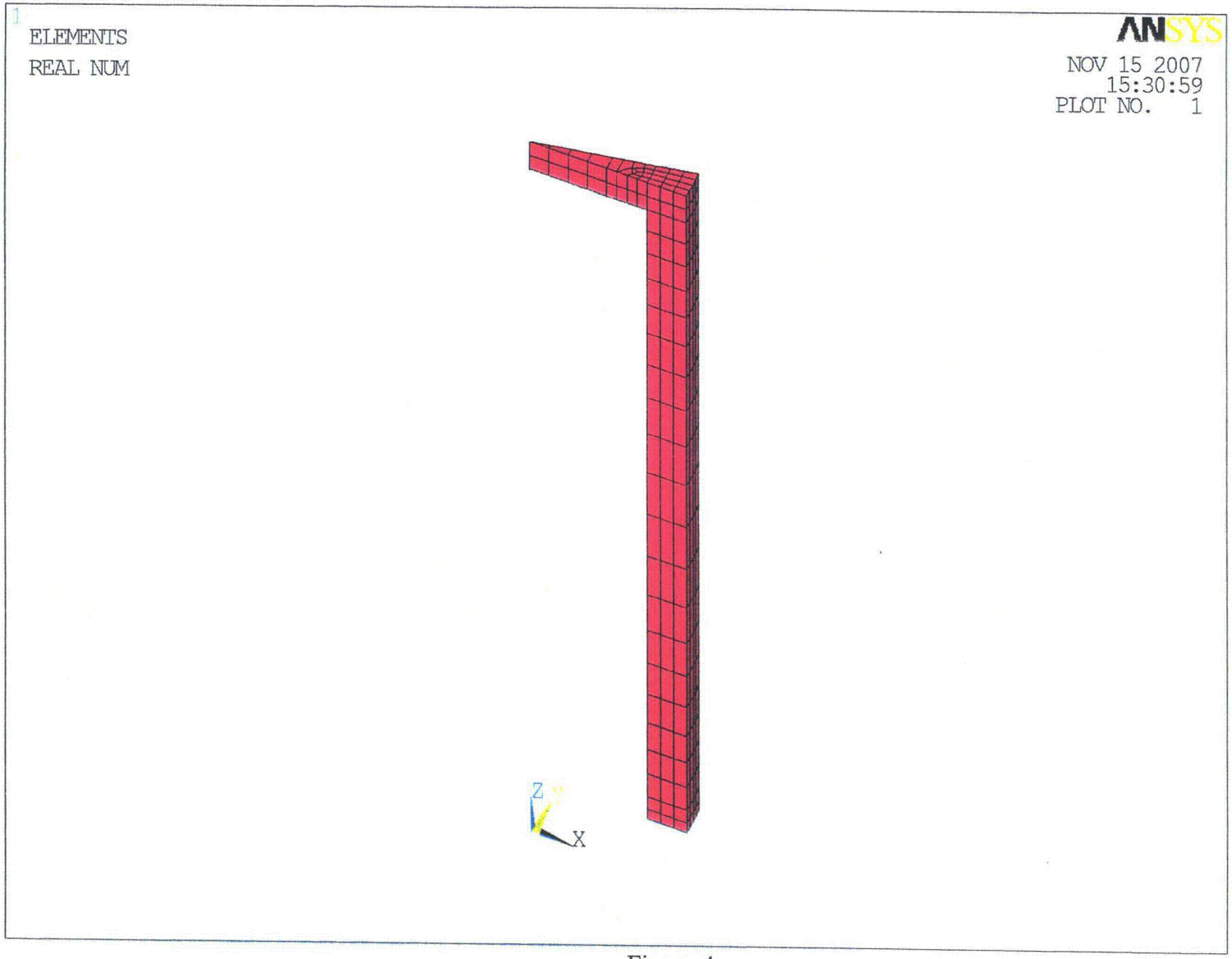

Figure 4
Finite Element Model of the Lead

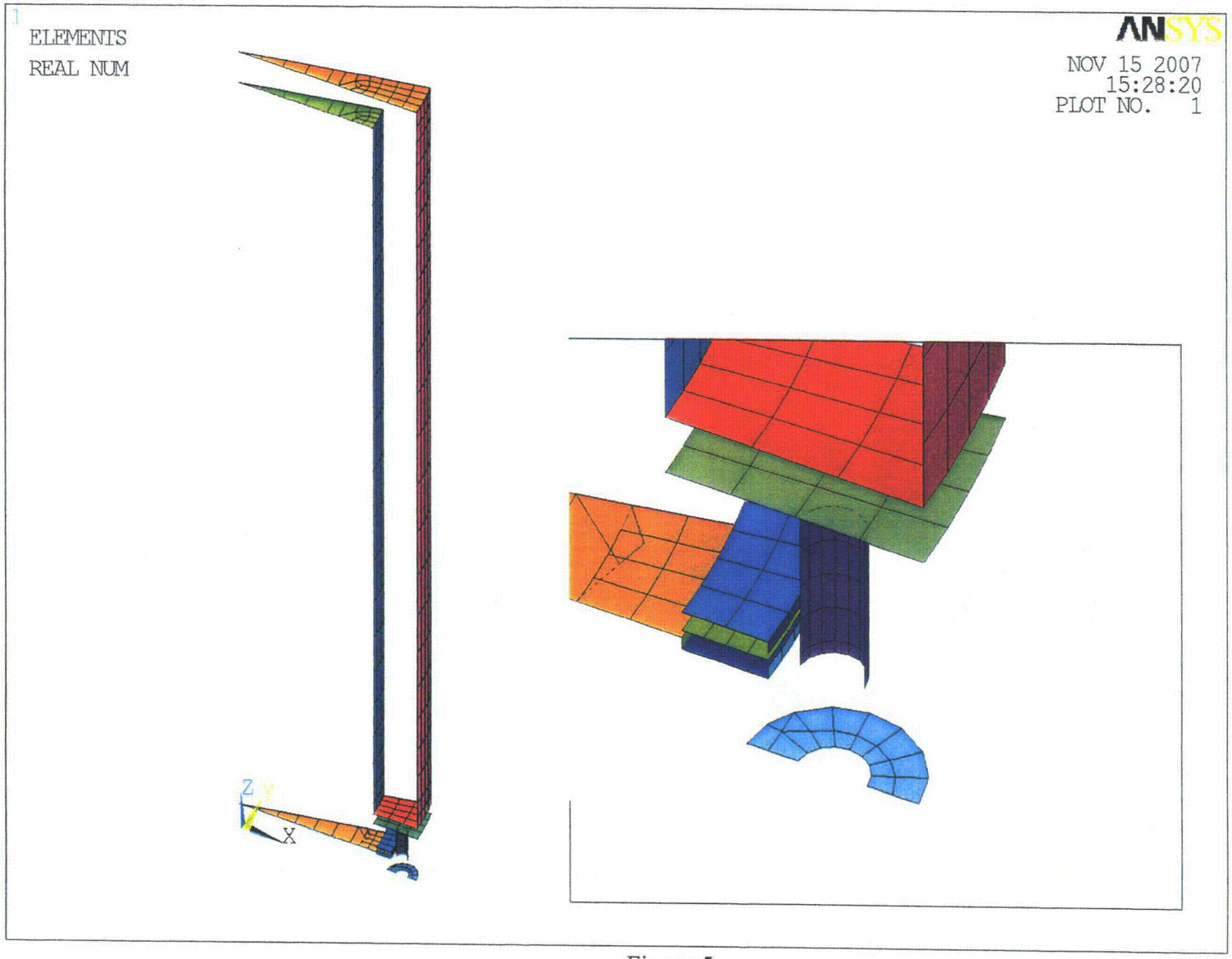

Figure 5
Finite Element Model of the Contact-Target Elements (Only Target Shown)

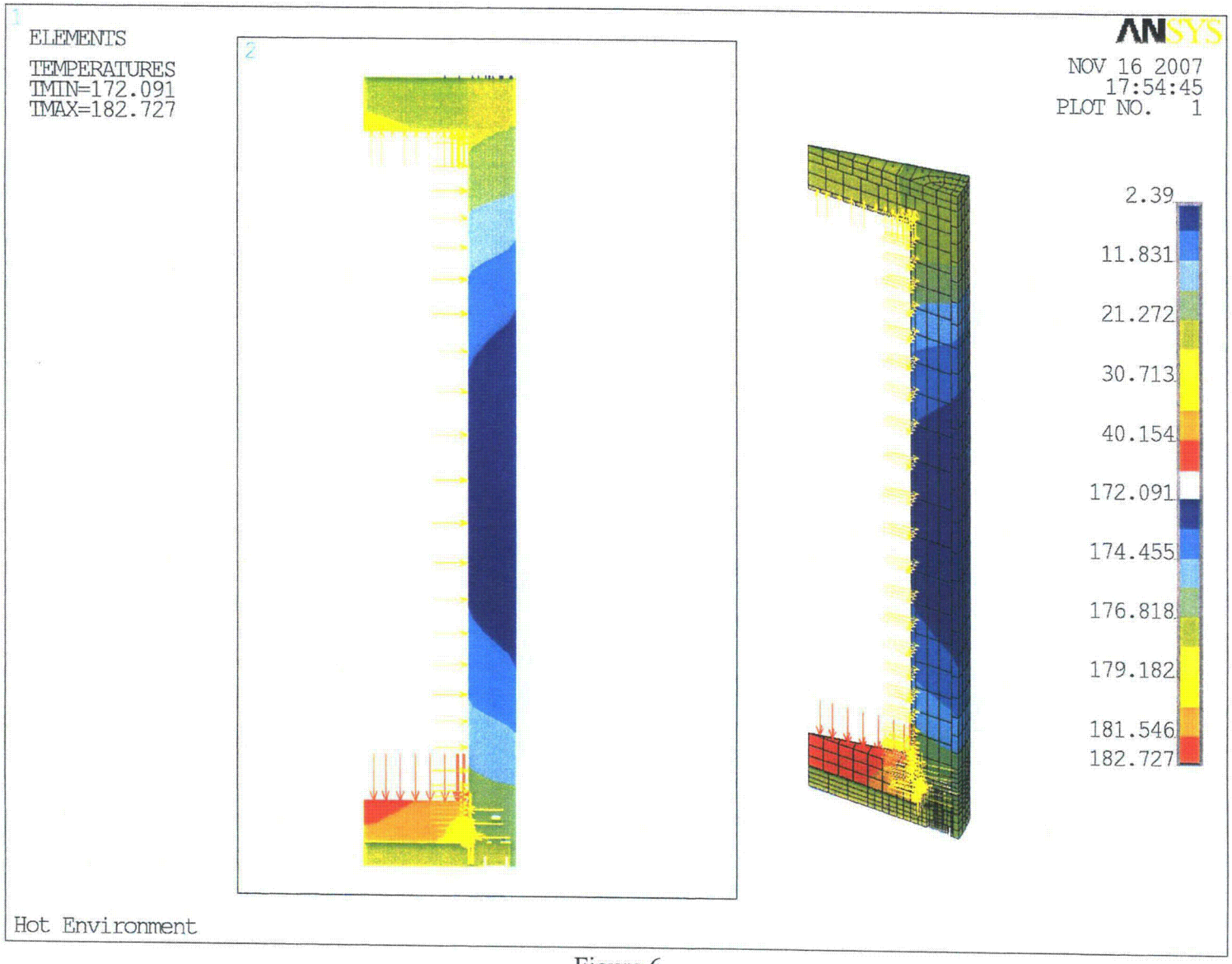

Figure 6
Temperature Profile and Pressure Distribution used for Load Step No.1

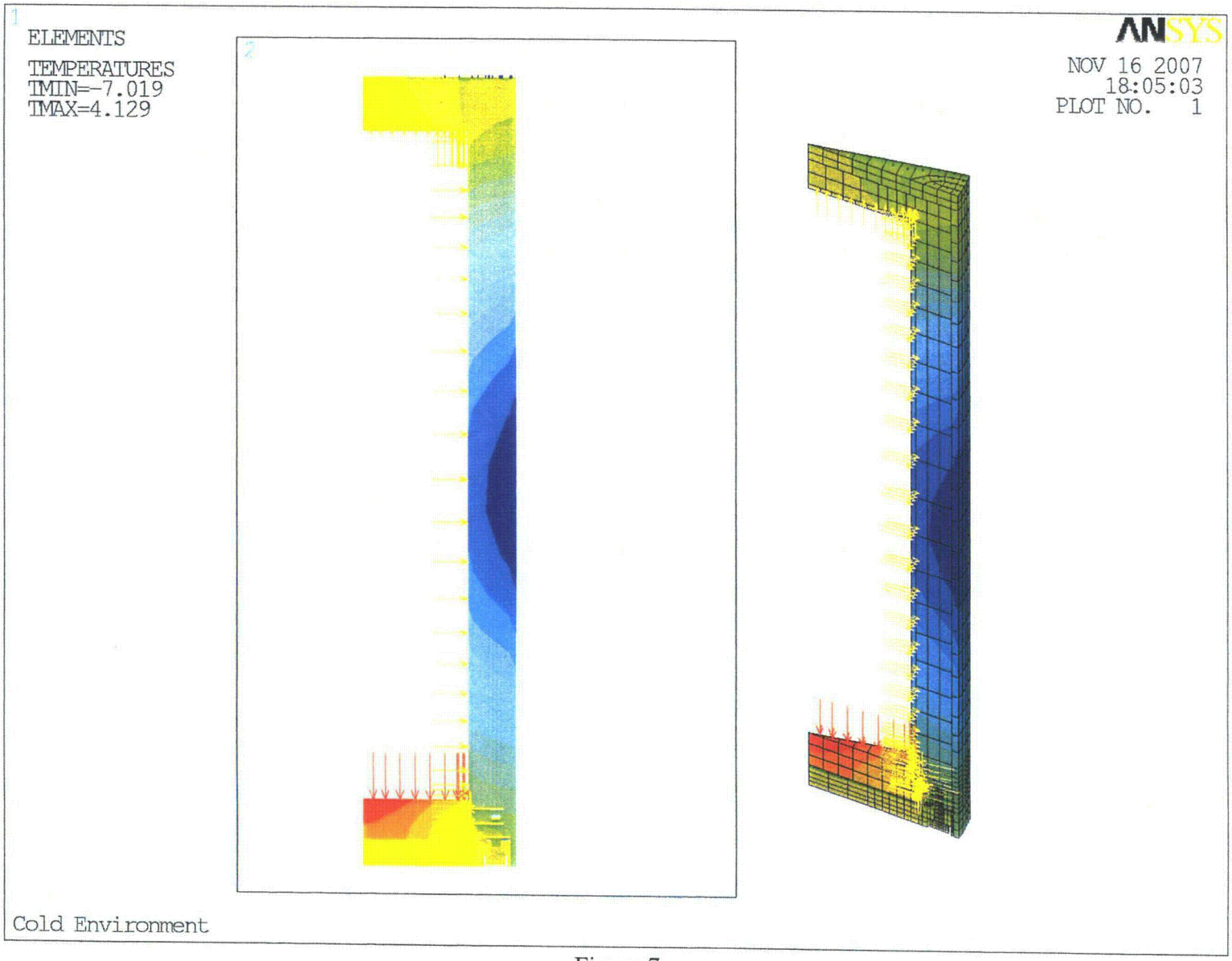

Figure 7
Temperature Profile and Pressure Distribution used for Load Step No.2

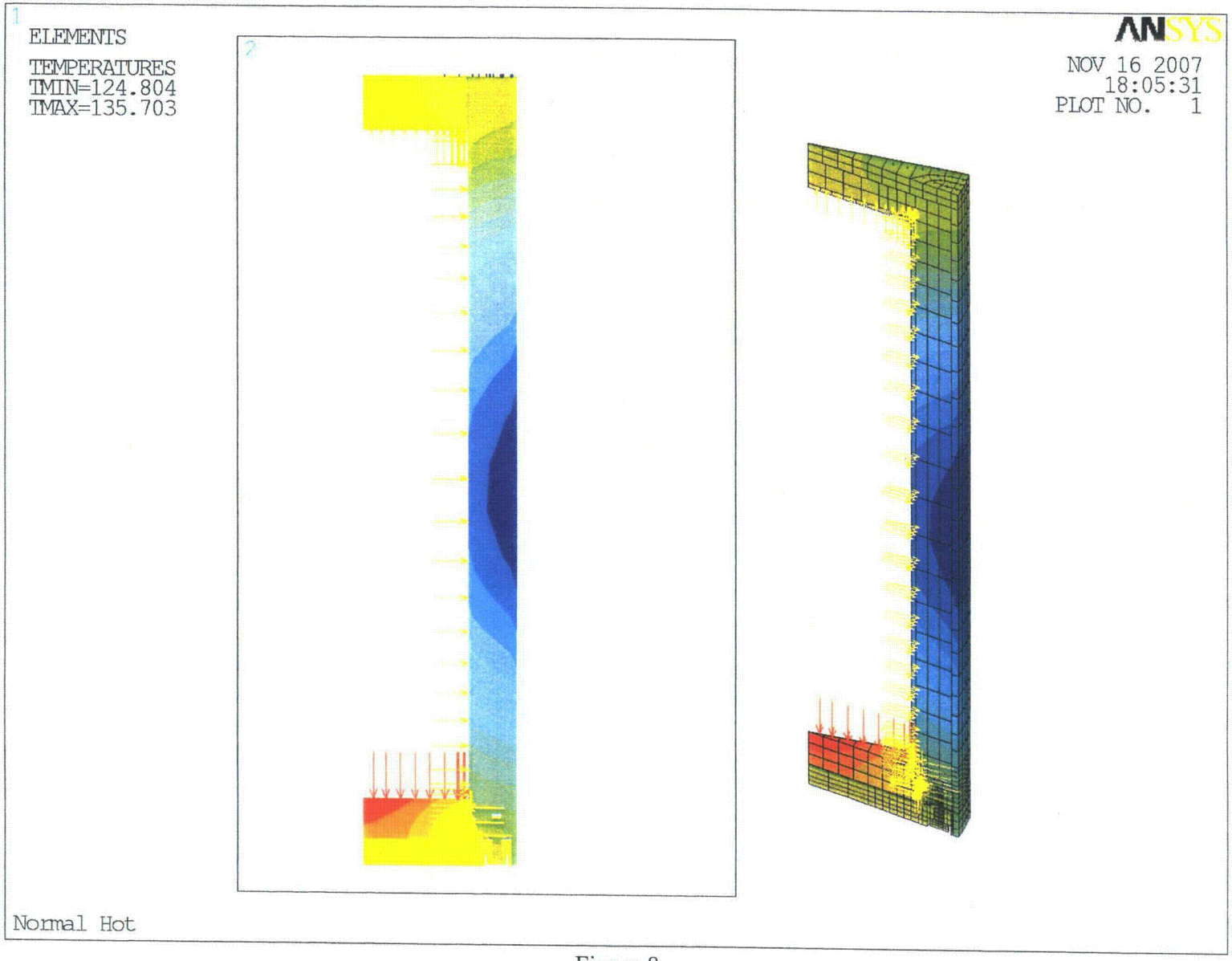

Figure 8
Temperature Profile and Pressure Distribution used for Load Step No.3

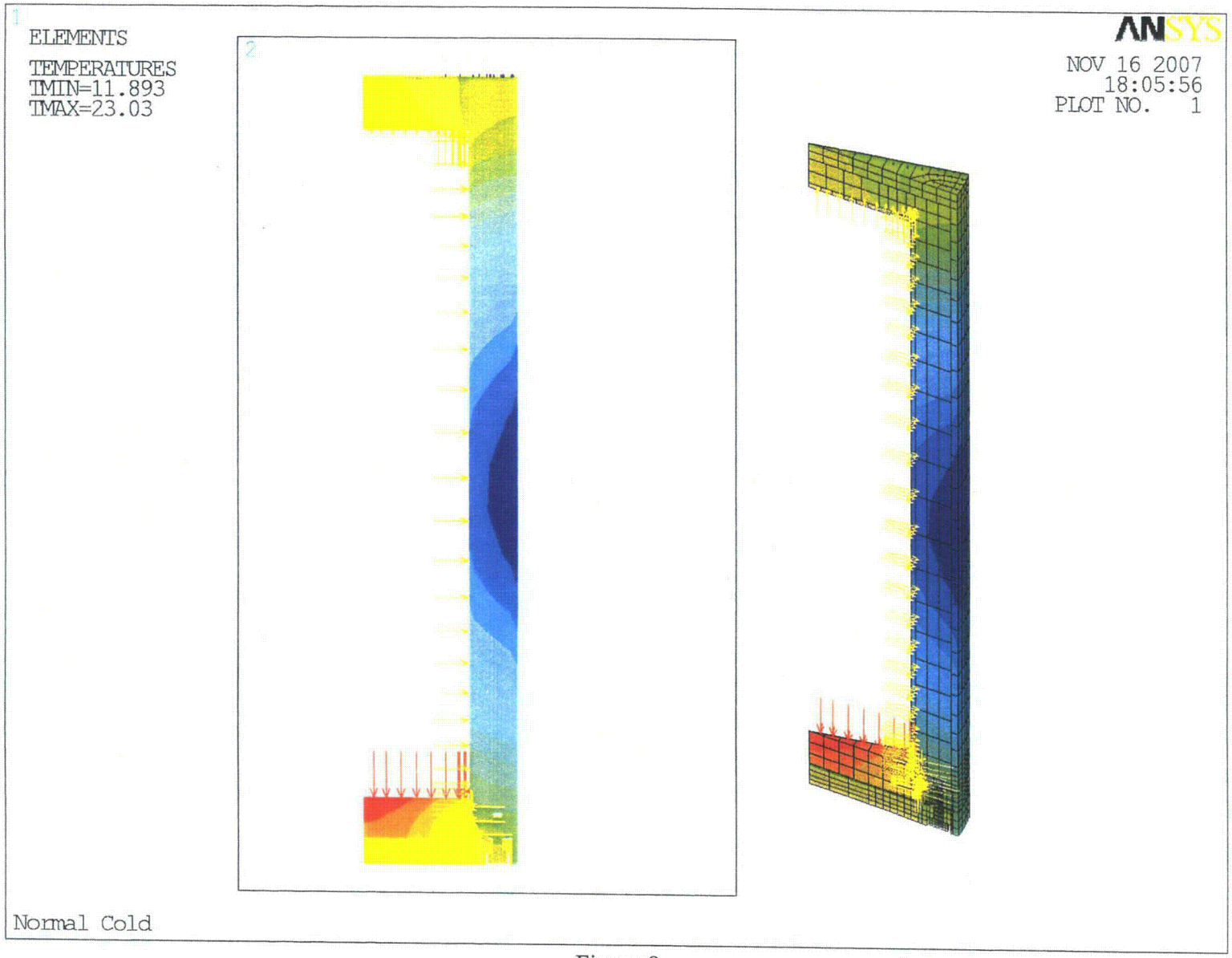

Figure 9
Temperature Profile and Pressure Distribution used for Load Step No.4

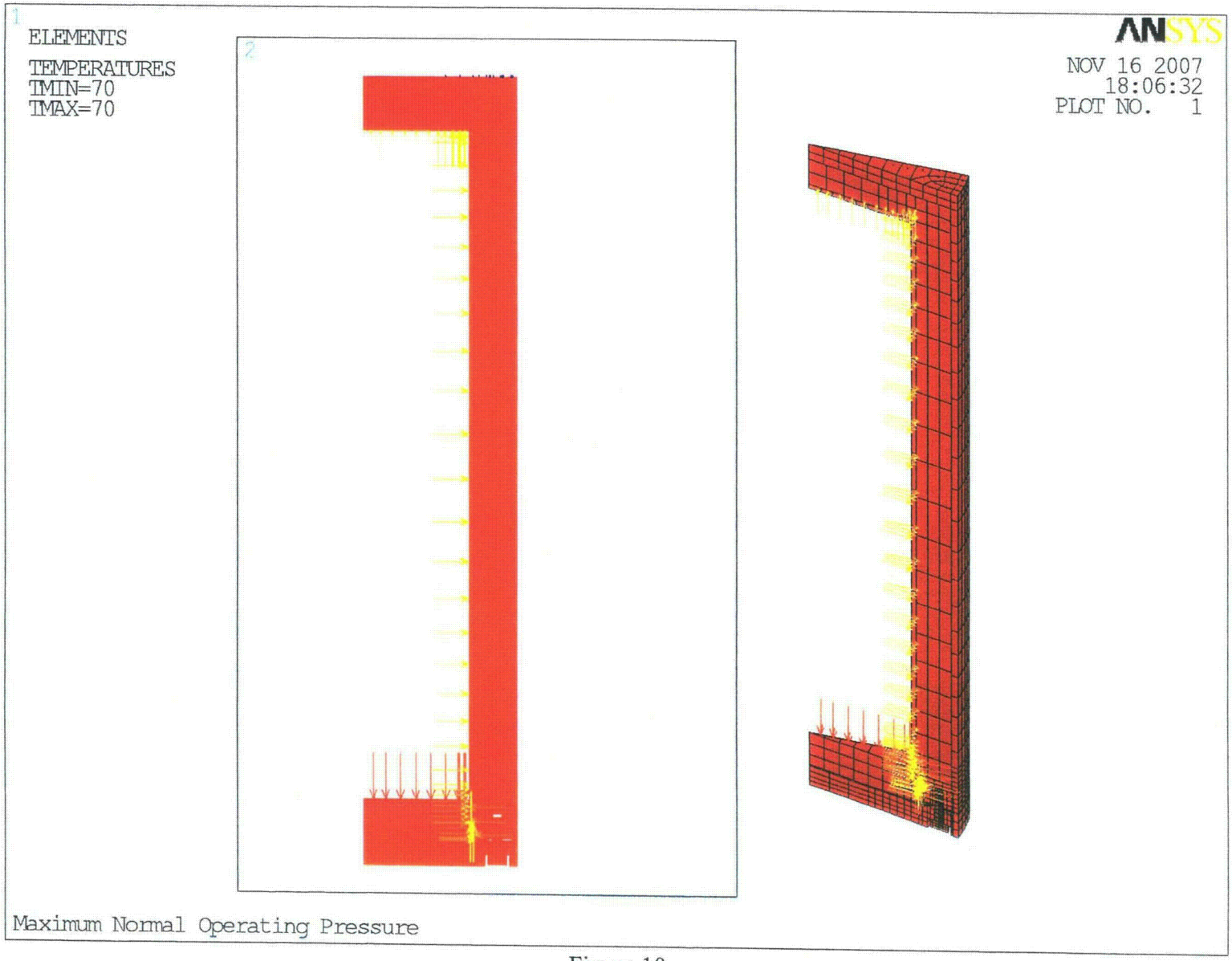

Figure 10
Temperature Profile and Pressure Distribution used for Load Step No.5

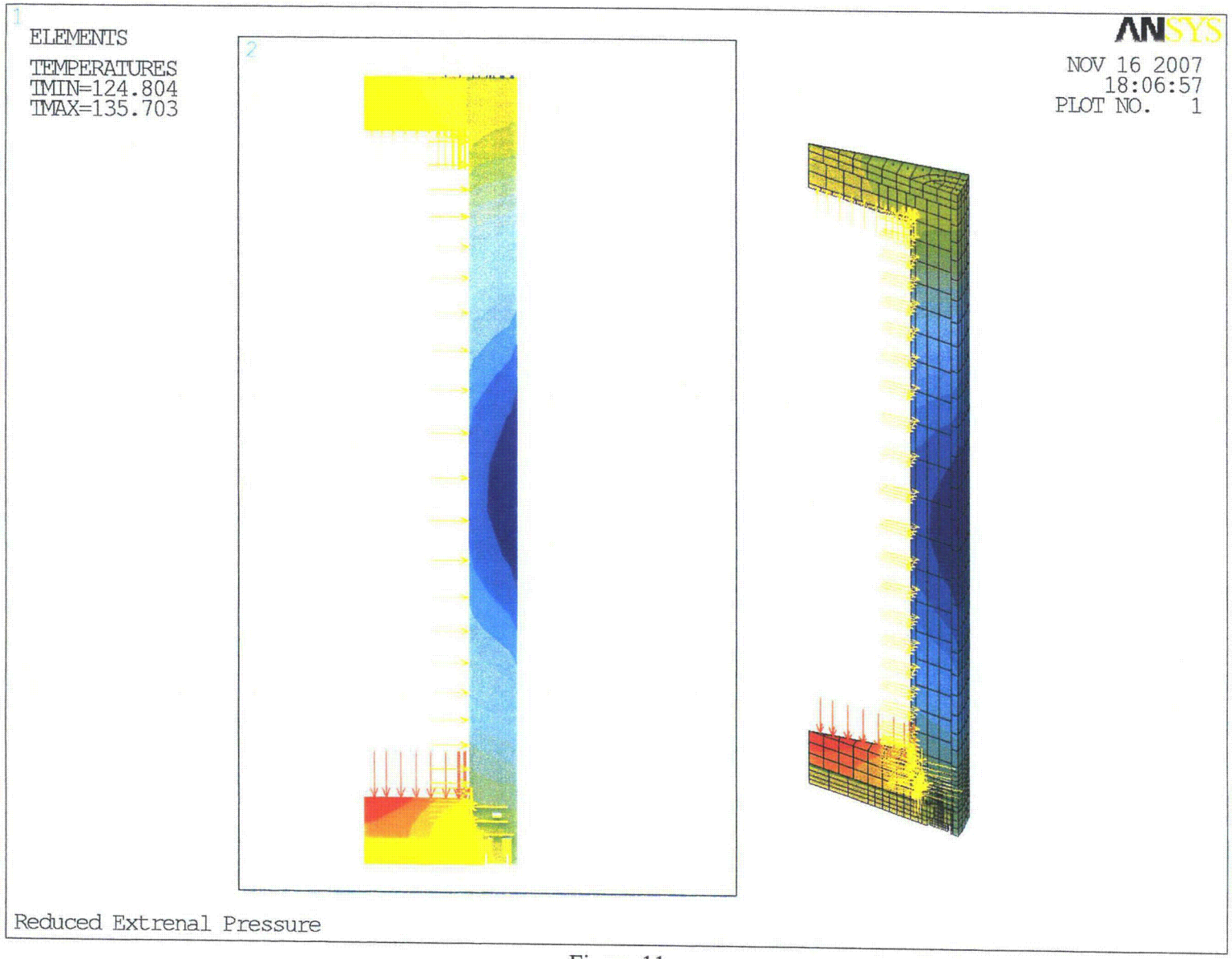

Figure 11
Temperature Profile and Pressure Distribution used for Load Step No.6

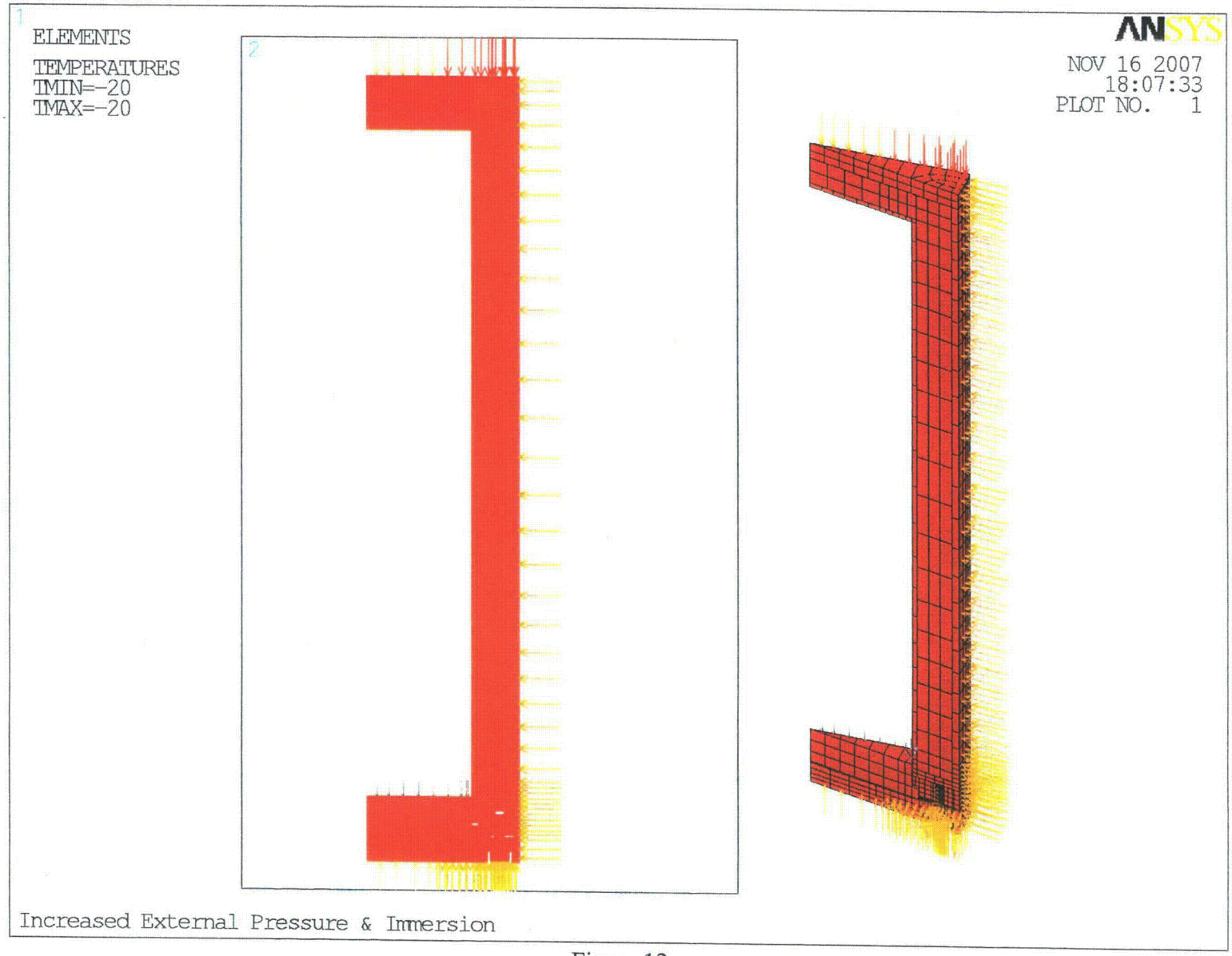

Figure 12
Temperature Profile and Pressure Distribution used for Load Step No.7

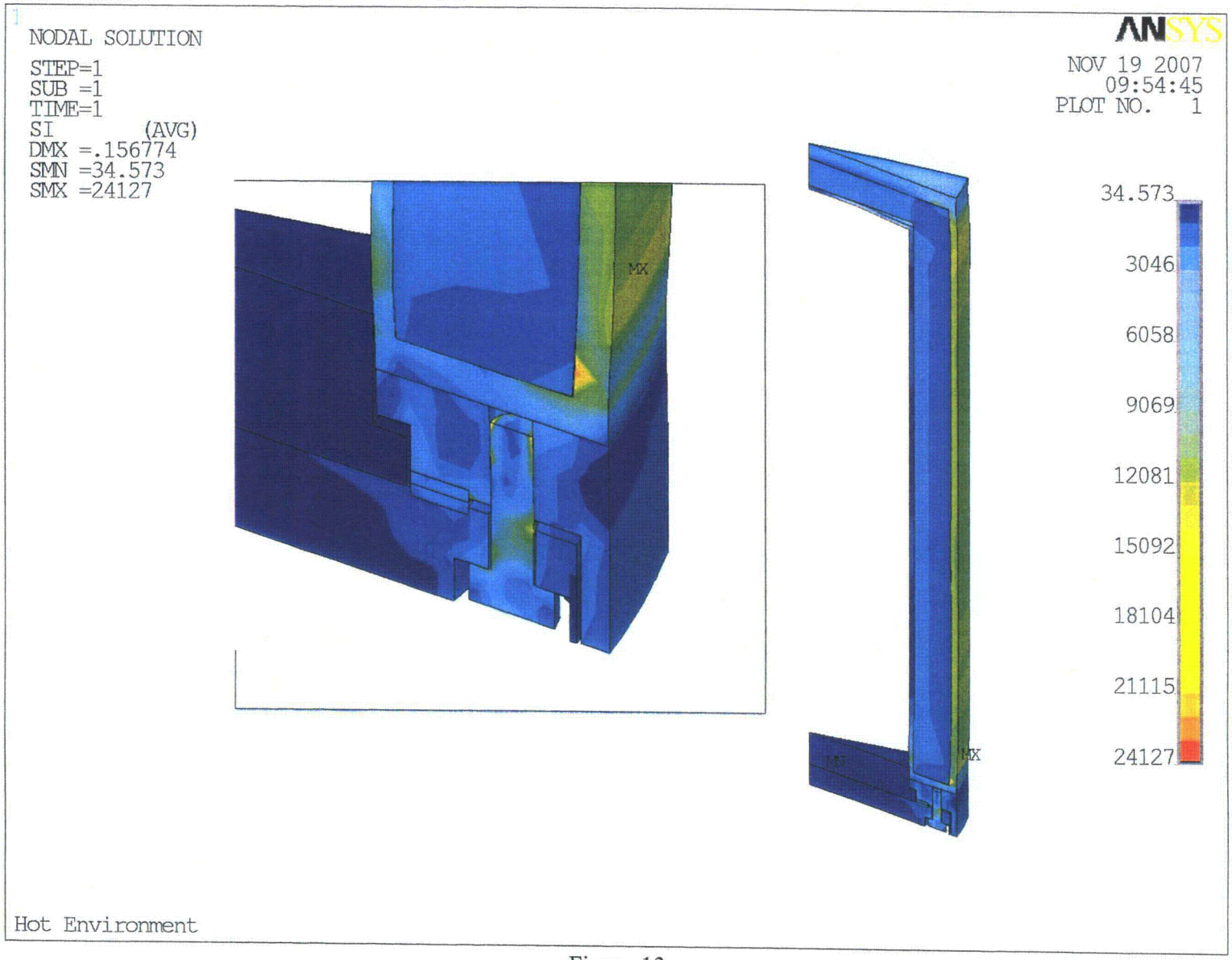

Figure 13
Stress Intensity Contour Plot – Load Step No.1

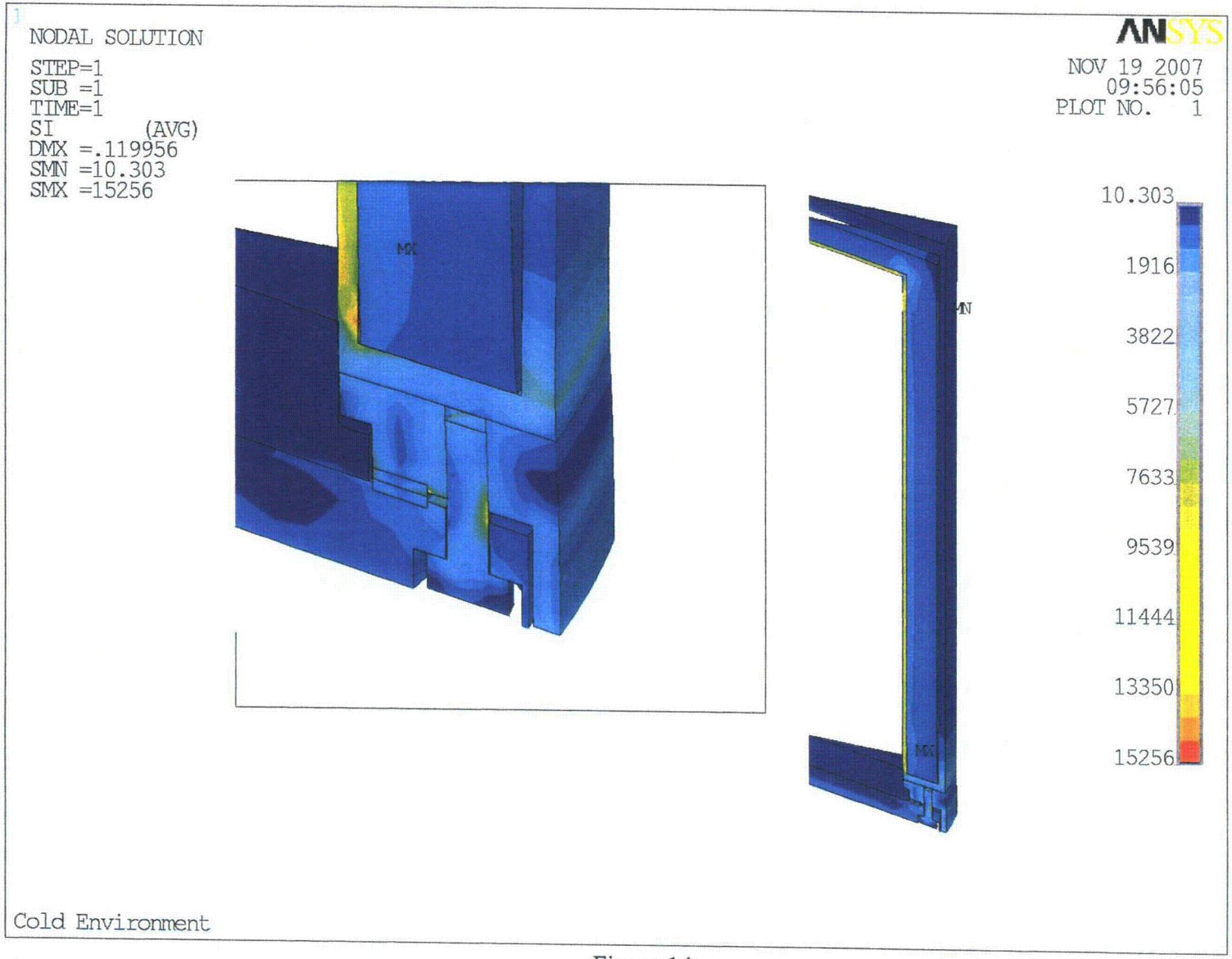

Figure 14
Stress Intensity Contour Plot – Load Step No.2

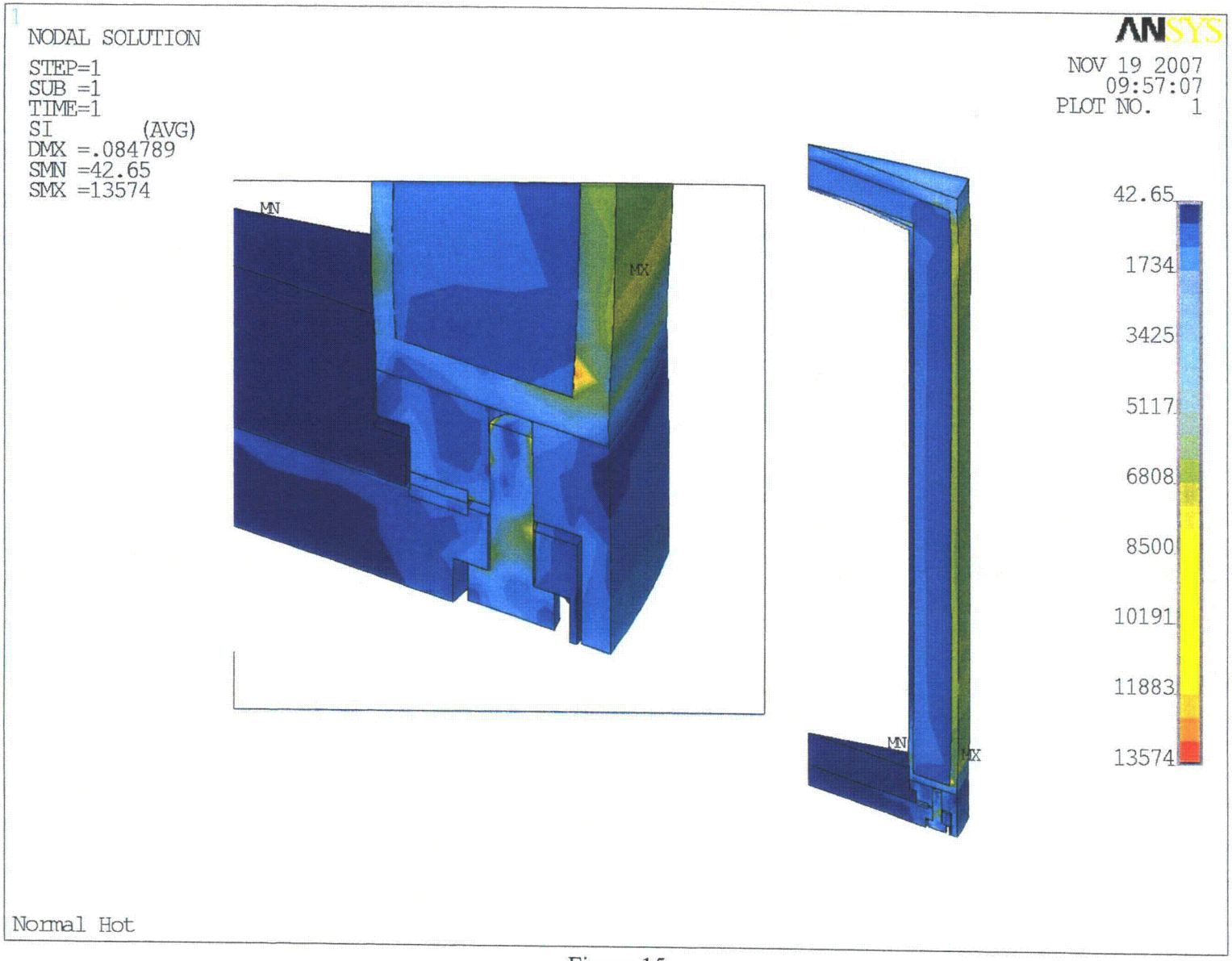

Figure 15
Stress Intensity Contour Plot – Load Step No.3

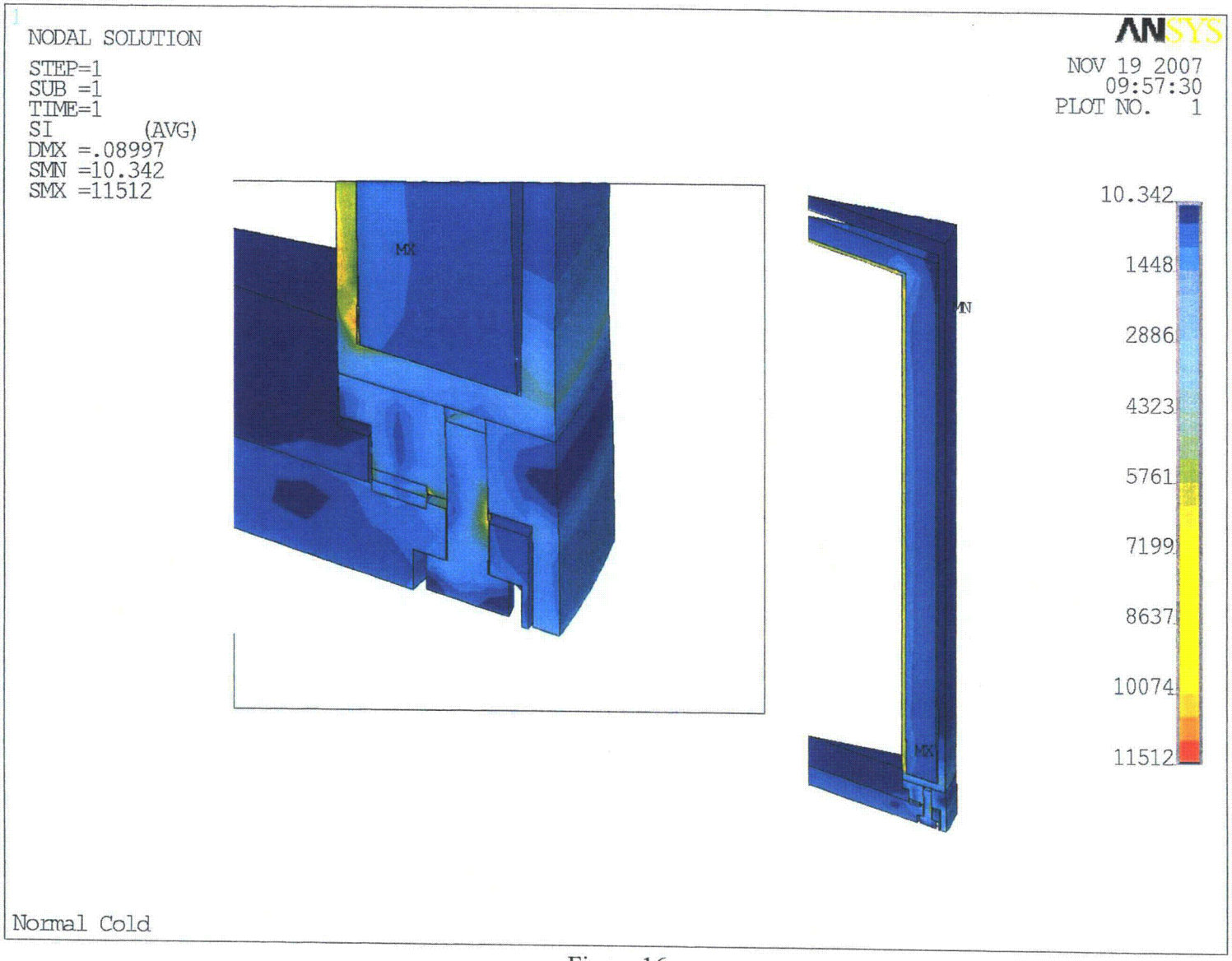

Figure 16
Stress Intensity Contour Plot – Load Step No.4

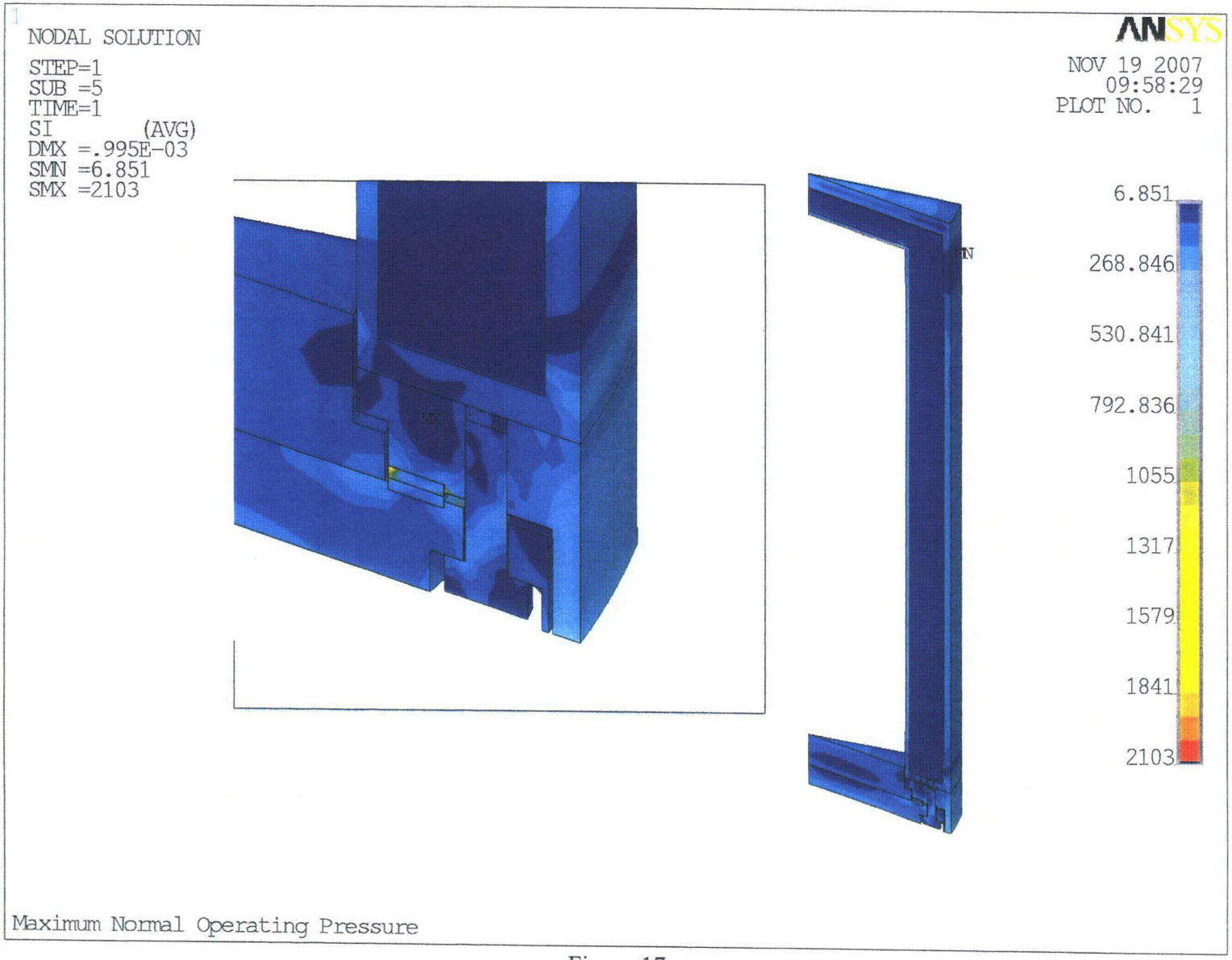

Figure 17
Stress Intensity Contour Plot – Load Step No.5

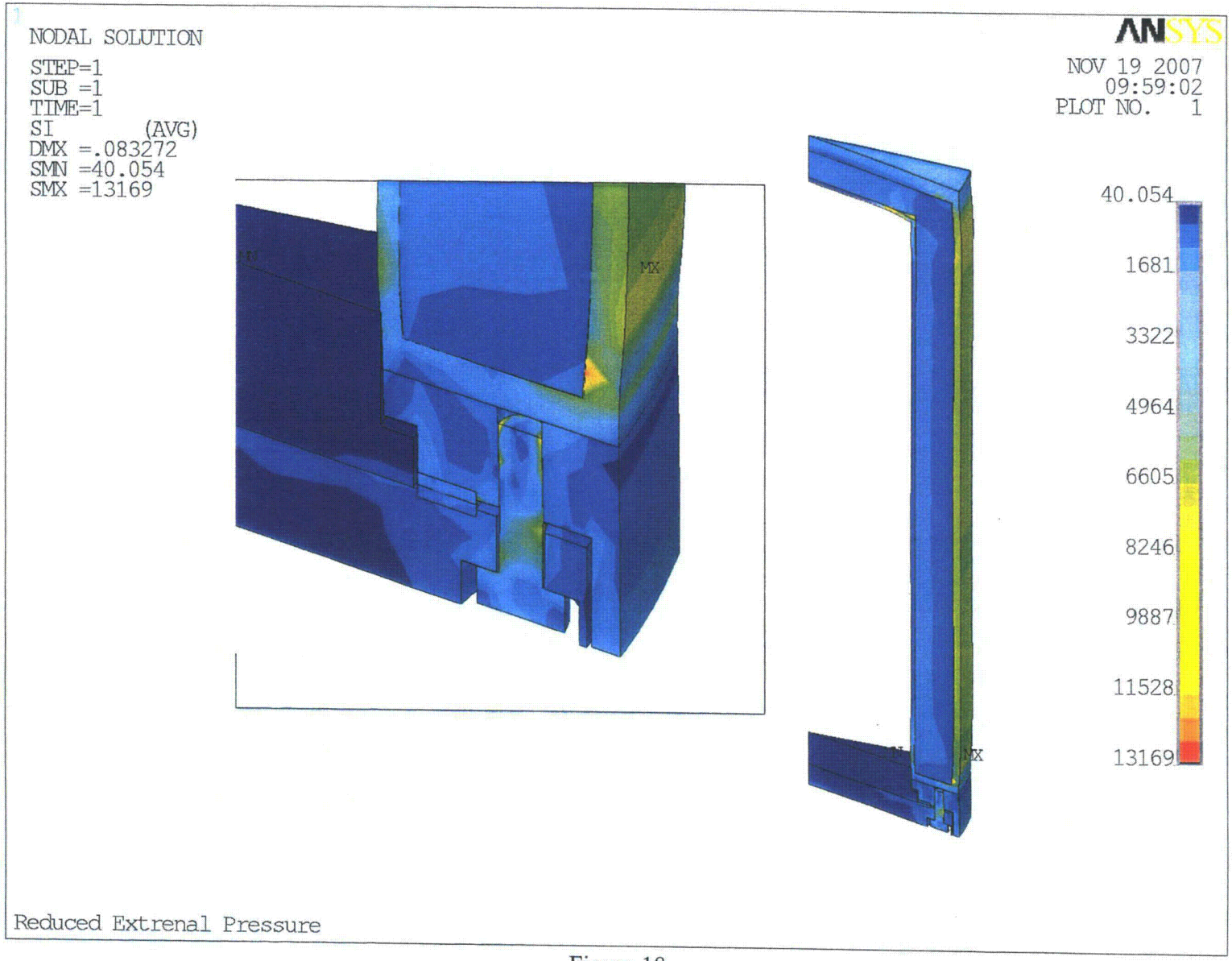

Figure 18
Stress Intensity Contour Plot – Load Step No.6

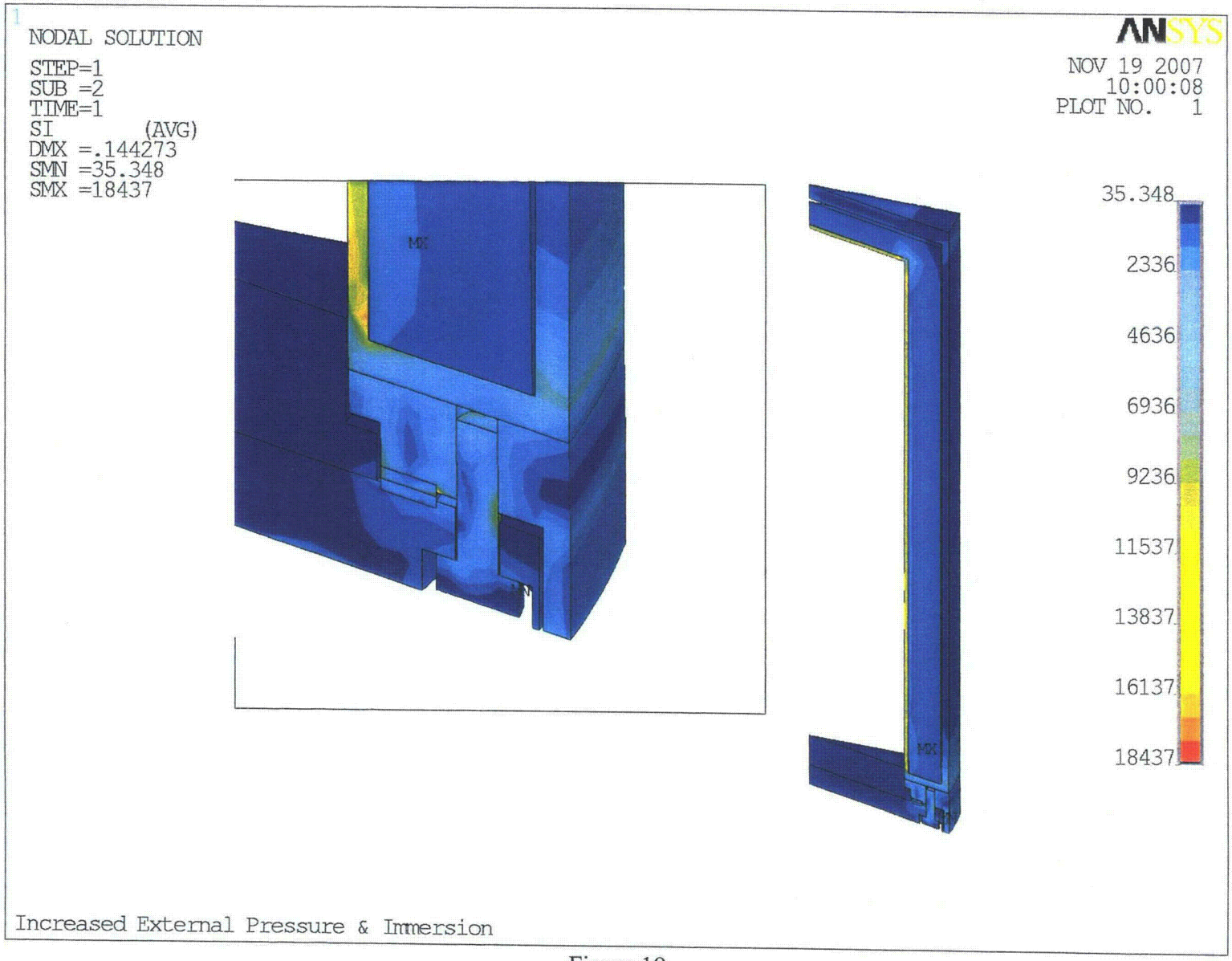

Figure 19
Stress Intensity Contour Plot – Load Step No.7

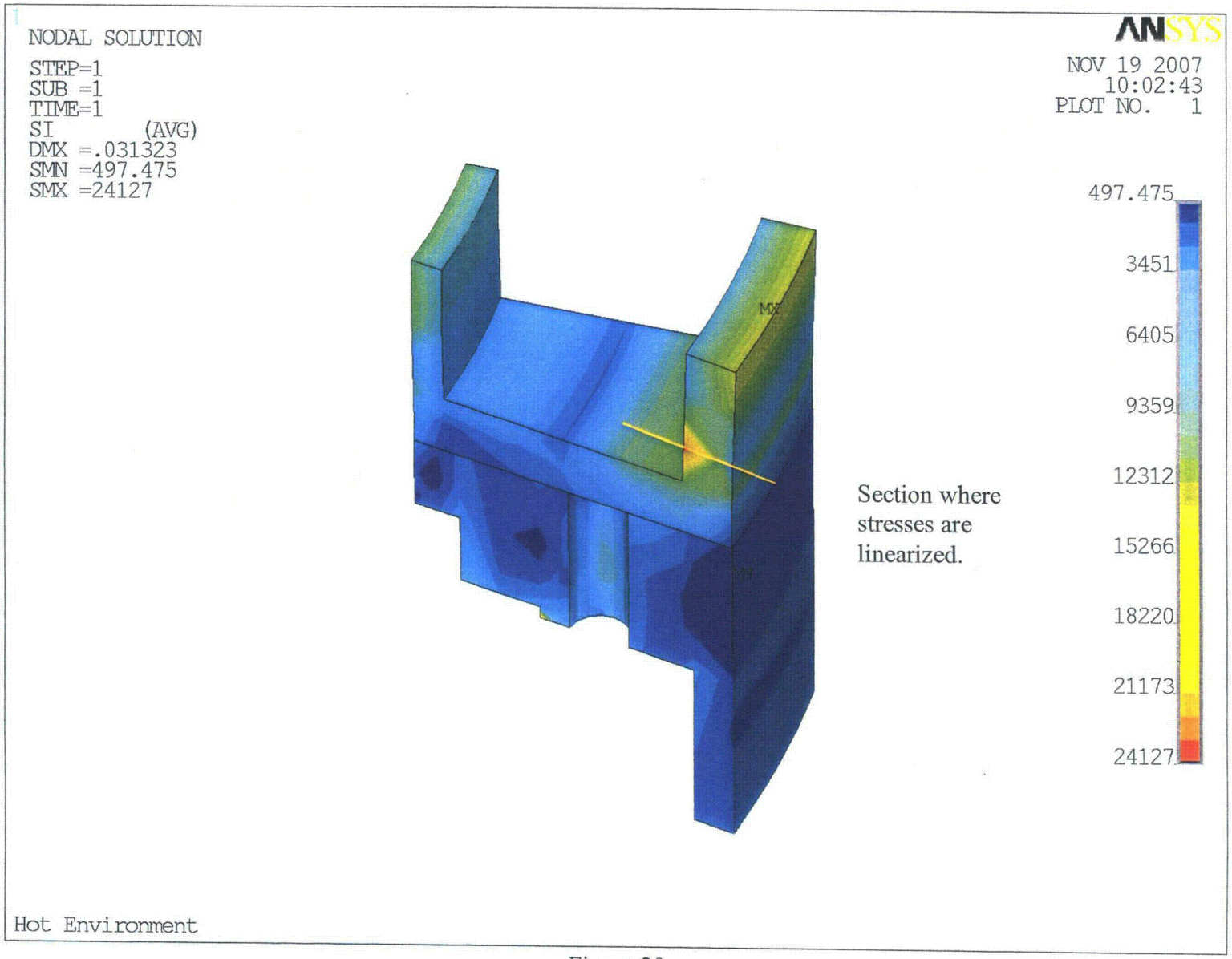

Figure 20
Stress Linearization – Load Step No.1 - Bolting Ring

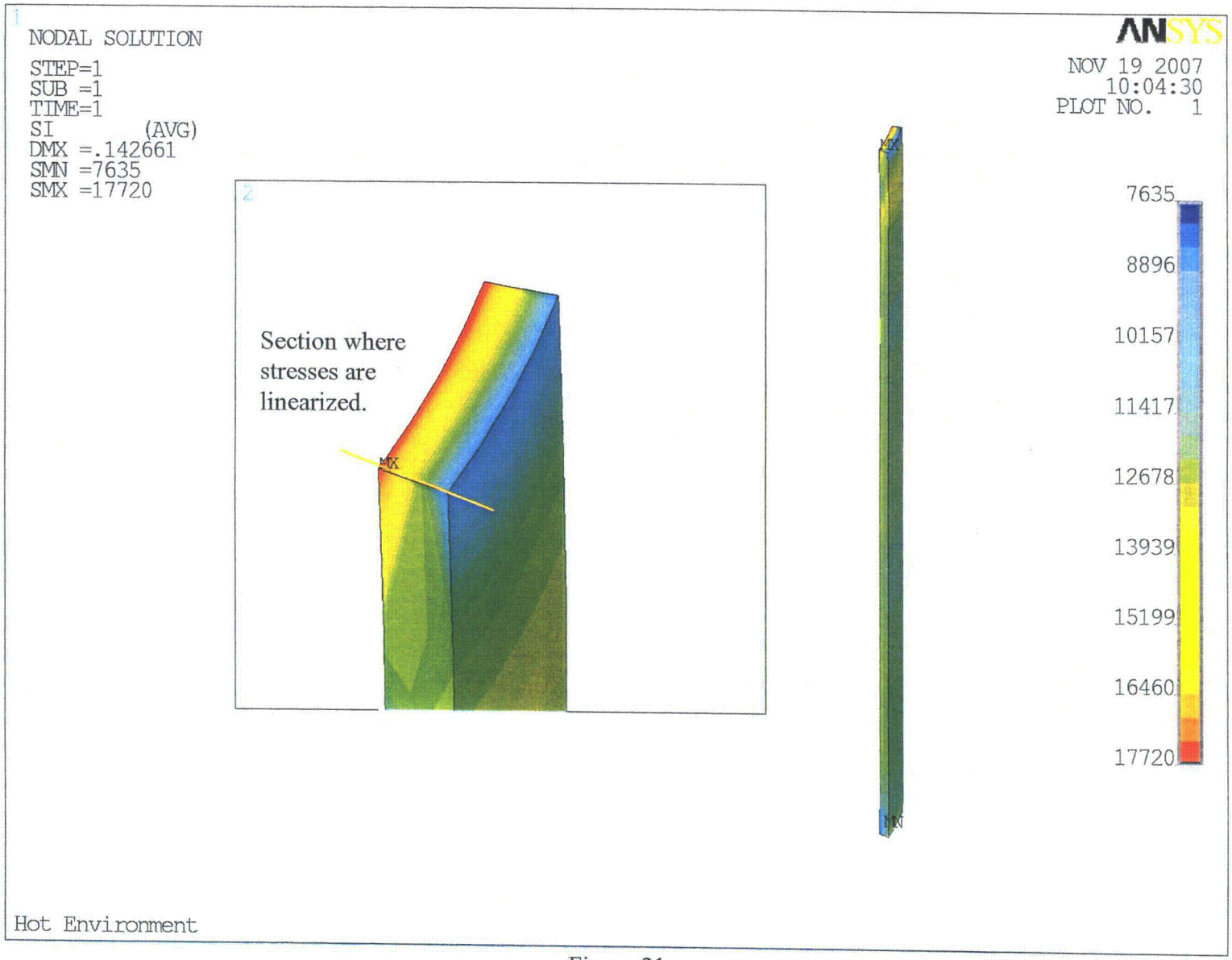

Figure 21
Stress Linearization – Load Step No.1 – Outer Shell

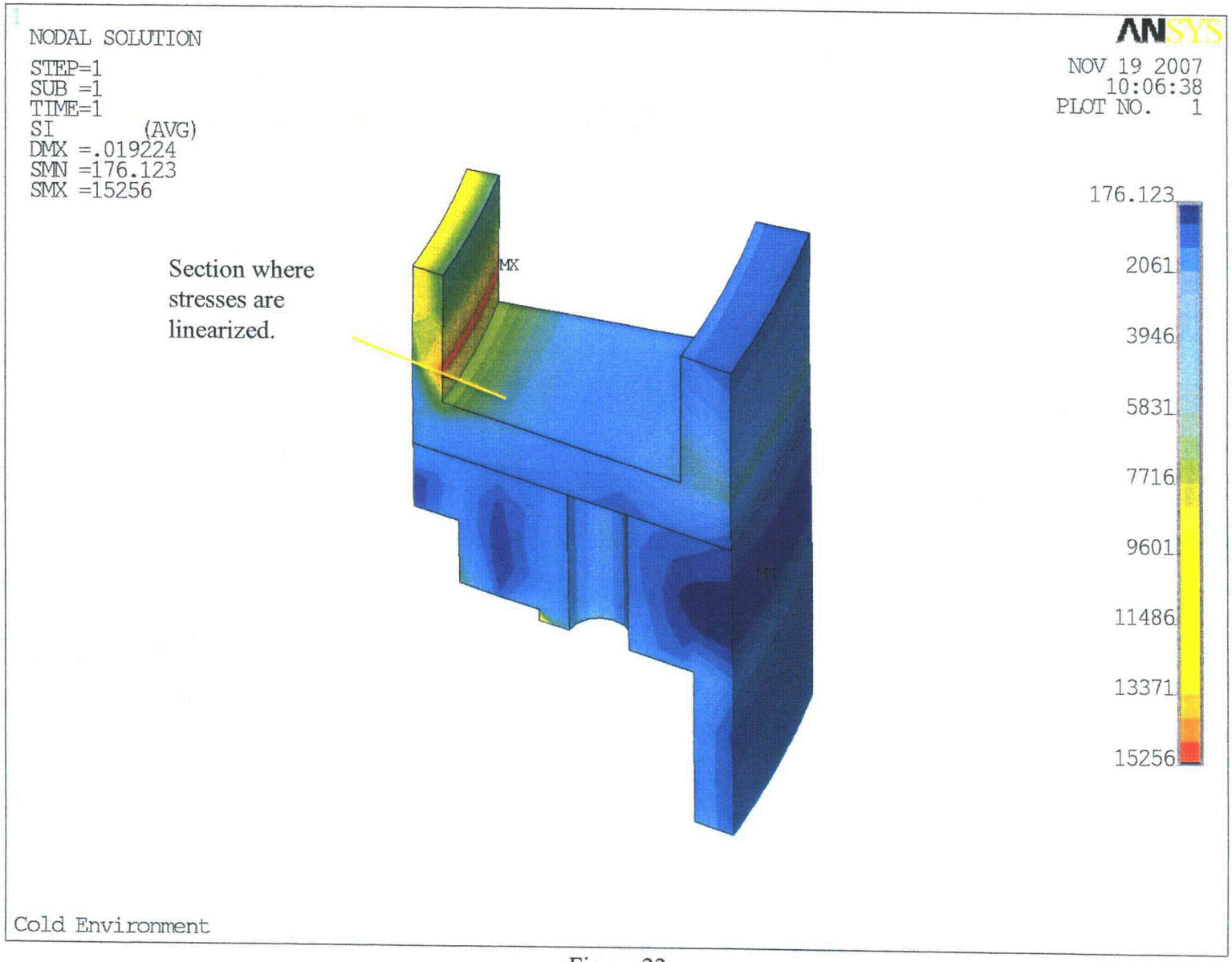

Figure 22
Stress Linearization – Load Step No.2 - Bolting Ring

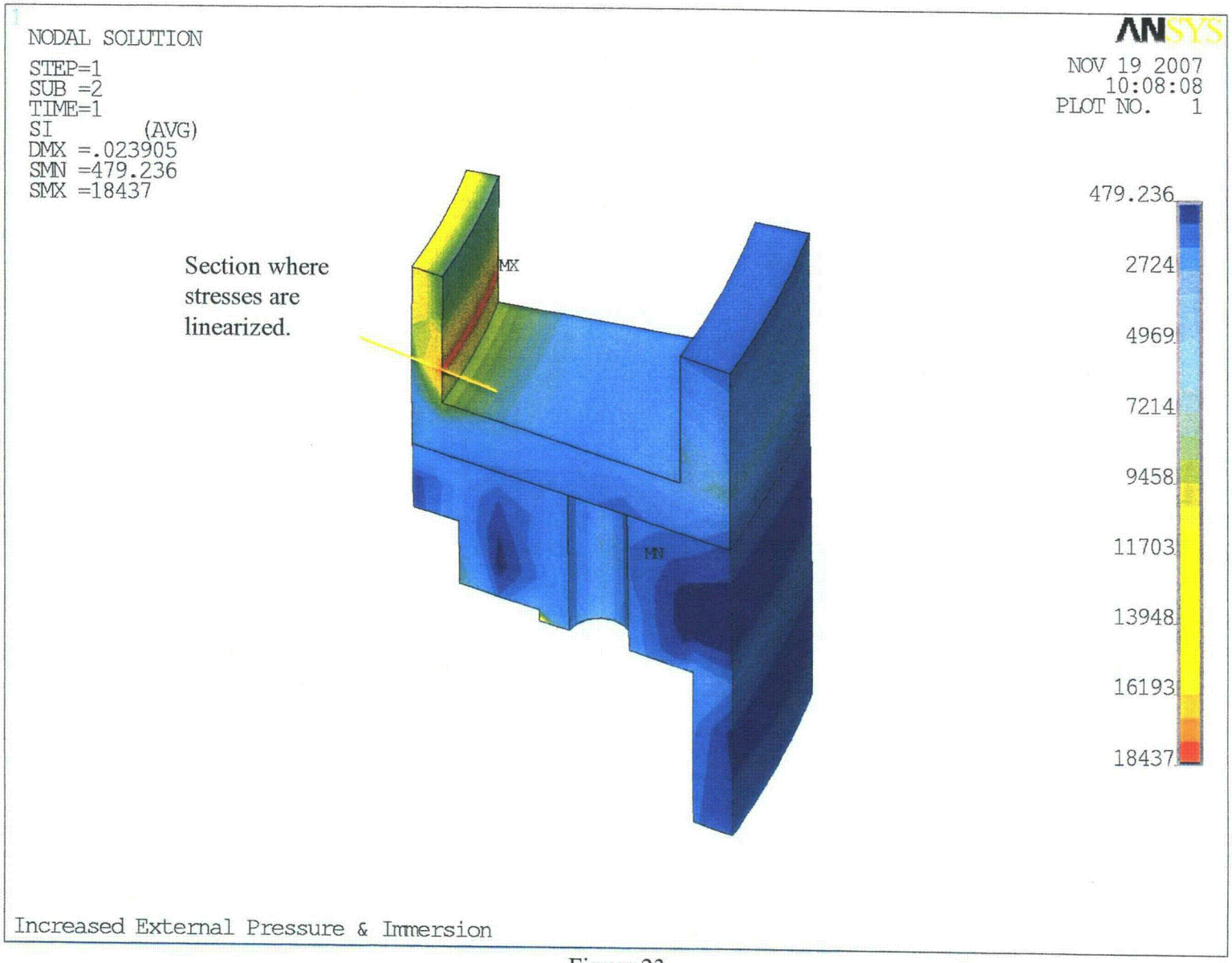

Figure 23
Stress Linearization – Load Step No.7 - Bolting Ring

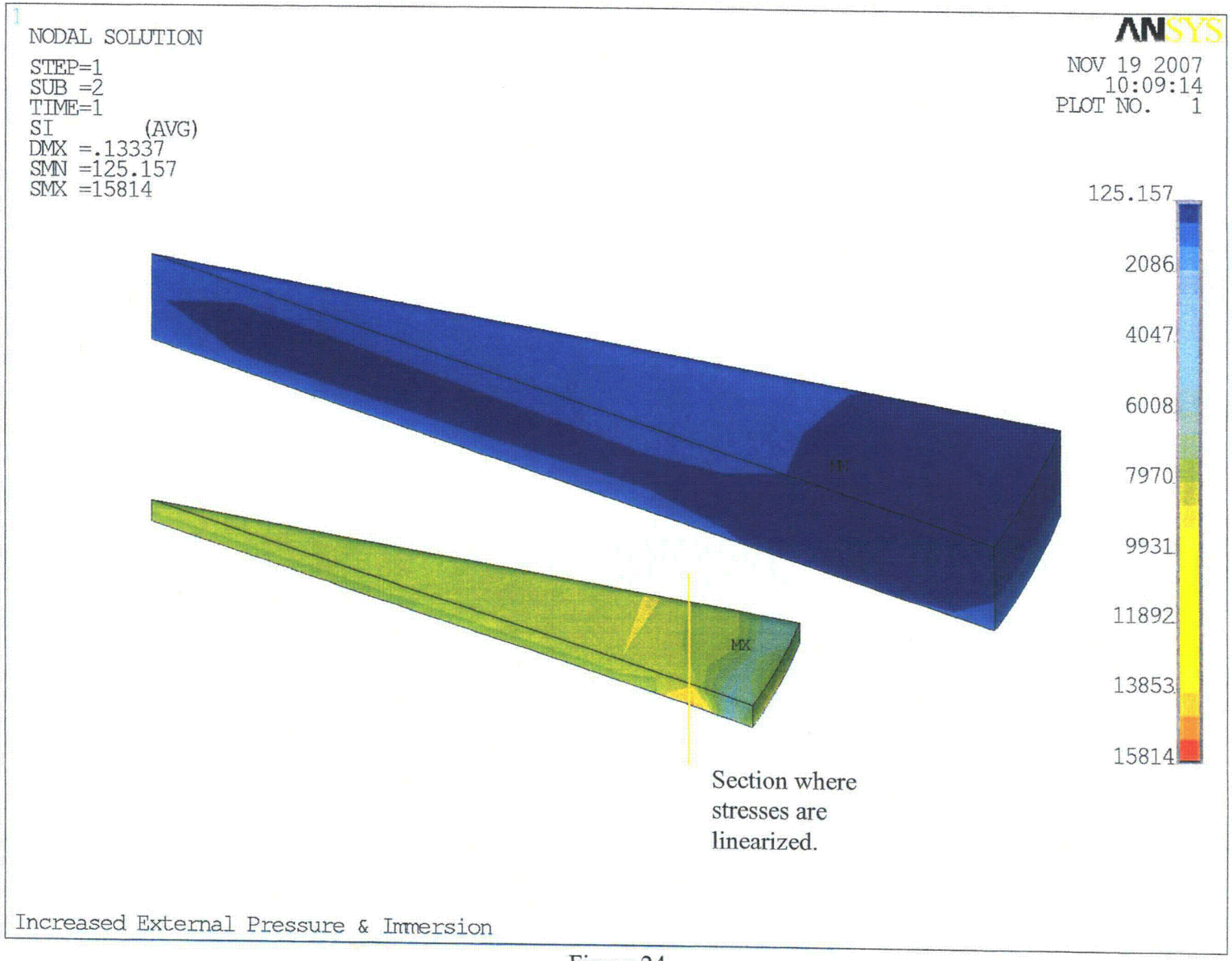

Figure 24
Stress Linearization – Load Step No.7 - Baseplates

Appendix 1

Printout of the ANSYS Model Data

(13 Pages)

NCT – Stress Analyses

By Dr. Mirza I. Baig

December 7, 2007

Report Generated by ANSYS

Title Listing

```
     ***** TITLES *****

 *** YOU ARE IN   ANSYS - ENGINEERING ANALYSIS SYSTEM ***
 ANSYS Mechanical/Emag
 RELEASE  11.0SP1   UPDATE 20070830   CUSTOMER  00222442

 INITIAL JOBNAME = file
 CURRENT JOBNAME = file

 Current Working Directory: Y:\Thermal\NCT\Stress

 TITLE= Hot Environment

 MENULIST File: C:\Program Files\ANSYS Inc\v110\ANSYS\gui\en-us\UIDL\menulist110.ans
```

Global Status

```
                         G L O B A L   S T A T U S

 ANSYS - Engineering Analysis System          Dec 07, 2007          11:33
 Release 11.0SP1              00222442                INTEL NT     Version

 Current working directory: Y:\Thermal\NCT\Stress

 MENULIST File: C:\Program Files\ANSYS Inc\v110\ANSYS\gui\en-us\UIDL\menulist110.ans

 Product(s) enabled: ANSYS Mechanical/Emag


 Total connect time. . . . .   0 hours  0 minutes
 Total CP usage. . . . . . .   0 hours  0 minutes  2.3 seconds

 J O B   I N F O R M A T I O N ----------------------------------------------

Hot Environment

 Current jobname . . . . . .file
```

```
 Initial jobname . . . . . .file

 Units . . . . . . . . . . .unknown

                                Available              Used
 Scratch Memory Space. . . .    256.000 mb          3.980 mb (  1.6%)
 Database space  . . . . . .  65535.750 mb          9.866 mb (  0.0%)

 User menu file in use . . .C:\Program Files\ANSYS Inc\v110\ANSYS\gui\en-
us\uidl\UIMENU.GRN
 User menu file in use . . .C:\Program Files\ANSYS Inc\v110\ANSYS\gui\en-
us\uidl\UIFUNC1.GRN
 User menu file in use . . .C:\Program Files\ANSYS Inc\v110\ANSYS\gui\en-
us\uidl\UIFUNC2.GRN
 User menu file in use . . .C:\Program Files\ANSYS Inc\v110\ANSYS\gui\en-
us\uidl\MECHTOOL.AUI
 Beta features . . . . . . .are not shown in the user interface

 M O D E L   I N F O R M A T I O N ---------------------------------------------

 Solid model summary:

                              Largest         Number        Number
                               Number        Defined       Selected
 Keypoints . . . . . . . . .       0             0             0
 Lines . . . . . . . . . . .       0             0             0
 Areas . . . . . . . . . . .       0             0             0
 Volumes . . . . . . . . . .       0             0             0

 Finite element model summary:

                              Largest         Number        Number
                               Number        Defined       Selected
 Nodes . . . . . . . . . . .    2895           2878          2878
 Elements. . . . . . . . . .    3945           2368          1522

 Element types . . . . . . .      70             35          n.a.
 Real constant sets. . . . .      57             28          n.a.
 Material property sets. . .       3              3          n.a.

 Coupling. . . . . . . . . .      82             30          n.a.
 Constraint equations. . . .       0              0          n.a.
 Master DOFs . . . . . . . .       0              0          n.a.
 Dynamic gap conditions. . .       0              0          n.a.

 B O U N D A R Y   C O N D I T I O N   I N F O R M A T I O N -----------------

                                          Number
                                         Defined
 Constraints on nodes. . . . . . . . . . .   1205
 Constraints on keypoints. . . . . . . . .      0
 Constraints on lines. . . . . . . . . . .      0
 Constraints on areas. . . . . . . . . . .      0

 Forces on nodes . . . . . . . . . . . . .      0
 Forces on keypoints . . . . . . . . . . .      0
```

```
Surface loads on elements . . . . . .      322
Number of element flagged surfaces  . . .    0
Surface loads on lines. . . . . . . . .      0
Surface loads on areas. . . . . . . . .      0

Body loads on elements. . . . . . . . .      0
Body loads on nodes . . . . . . . . . .   2878
Body loads on keypoints . . . . . . . .      0

Temperatures
   Uniform temperature. . . . . . . . .  100.000
   Reference temperature. . . . . . . .   70.000
   Offset from absolute scale . . . . . . 460.000

                                            X          Y          Z
Linear acceleration . . . . . . . . . . . 0.0000     0.0000     1.1070
Angular velocity (about global CS). . . . 0.0000     0.0000     0.0000
Angular acceleration (about global CS). . 0.0000     0.0000     0.0000
Location of reference CS. . . . . . . . . 0.0000     0.0000     0.0000
Angular velocity (about reference CS) . . 0.0000     0.0000     0.0000
Angular acceleration (about reference CS) 0.0000     0.0000     0.0000

R O U T I N E   I N F O R M A T I O N ------------------------------------

Current routine. . . . . . . . . . . .Preprocessing (PREP7)

Active coordinate system . . . . . . . 12 (Cartesian)

Display coordinate system. . . . . . .  0 (Cartesian)

Current element attributes:
   Type number . . . . . . . . . . . .   69  (TARGE170)
   Real number . . . . . . . . . . . .   57
   Material number . . . . . . . . . .    1
   Element coordinate system number. .    0

Current mesher type. . . . . . . . . .based on default element shape

Current element meshing shape 2D . . .use default element shape.

Current element meshing shape 3D . . .use default element shape.

SmrtSize Level  . . . . . . . . . . . . OFF

Global element size. . . . . . . . . .     0 divisions per line

Active coordinate system . . . . . . . 12 (Cartesian)

Display coordinate system. . . . . . .  0 (Cartesian)

Analysis type. . . . . . . . . . . . .Static (steady-state)

Active options for this analysis type:
   Large deformation effects . . . . .Not included
   Plasticity. . . . . . . . . . . . .Not included
   Creep . . . . . . . . . . . . . . .Not included
   Equation solver to use. . . . . . .Program Chosen
```

```
Results file . . . . . . . . . . . . .file.rst

Load step number . . . . . . . . . . .     1

Number of substeps . . . . . . . . . .     1
   Step change boundary conditions . .No
```

Element Type Listing

```
LIST ELEMENT TYPES FROM      1 TO     70 BY      1

ELEMENT TYPE      1 IS SOLID185     3-D 8-NODE STRUCTURAL SOLID    INOPR
 KEYOPT(1-12)=    0  0  0    0  0  0    0  0  0    0  0  0       0

ELEMENT TYPE      2 IS SHELL41      MEMBRANE SHELL                 INOPR
 KEYOPT(1-12)=    0  0  0    0  0  0    0  0  0    0  0  0       0

ELEMENT TYPE      3 IS SOLSH190     3-D 8-NODE SOLID SHELL         INOPR
 KEYOPT(1-12)=    0  0  0    0  0  0    0  0  0    0  0  0       0

ELEMENT TYPE     14 IS TARGE170     3-D TARGET SEGMENT             INOPR
 KEYOPT(1-12)=    0  0  0    0  0  0    0  0  0    0  0  0       0

ELEMENT TYPE     15 IS CONTA174     3D 8-NODE SURF-SURF CONTACT    INOPR
 KEYOPT(1-12)=    0  0  0    2  1  0    0  0  1    0  0  1       0

ELEMENT TYPE     16 IS TARGE170     3-D TARGET SEGMENT             INOPR
 KEYOPT(1-12)=    0  0  0    0  0  0    0  0  0    0  0  0       0

ELEMENT TYPE     17 IS CONTA174     3D 8-NODE SURF-SURF CONTACT    INOPR
 KEYOPT(1-12)=    0  2  0    2  3  0    0  0  1    2  0  6       0

ELEMENT TYPE     18 IS TARGE170     3-D TARGET SEGMENT             INOPR
 KEYOPT(1-12)=    0  0  0    0  0  0    0  0  0    0  0  0       0

ELEMENT TYPE     19 IS CONTA174     3D 8-NODE SURF-SURF CONTACT    INOPR
 KEYOPT(1-12)=    0  0  0    2  2  0    0  0  1    2  0  5       0

ELEMENT TYPE     20 IS TARGE170     3-D TARGET SEGMENT             INOPR
 KEYOPT(1-12)=    0  0  0    0  0  0    0  0  0    0  0  0       0

ELEMENT TYPE     21 IS CONTA174     3D 8-NODE SURF-SURF CONTACT    INOPR
 KEYOPT(1-12)=    0  0  0    2  1  0    0  0  1    2  0  3       0

ELEMENT TYPE     22 IS TARGE170     3-D TARGET SEGMENT             INOPR
 KEYOPT(1-12)=    0  0  0    0  0  0    0  0  0    0  0  0       0

ELEMENT TYPE     23 IS CONTA174     3D 8-NODE SURF-SURF CONTACT    INOPR
 KEYOPT(1-12)=    0  0  0    2  3  0    0  0  1    2  0  5       0

ELEMENT TYPE     24 IS TARGE170     3-D TARGET SEGMENT             INOPR
 KEYOPT(1-12)=    0  0  0    0  0  0    0  0  0    0  0  0       0
```

```
ELEMENT TYPE      25 IS CONTA174     3D 8-NODE SURF-SURF CONTACT    INOPR
 KEYOPT(1-12)=     0  0  0    2  3  0    0  0  1    2  0  0       0

ELEMENT TYPE      26 IS TARGE170     3-D TARGET SEGMENT             INOPR
 KEYOPT(1-12)=     0  0  0    0  0  0    0  0  0    0  0  0       0

ELEMENT TYPE      27 IS CONTA174     3D 8-NODE SURF-SURF CONTACT    INOPR
 KEYOPT(1-12)=     0  0  0    2  3  0    0  0  1    2  0  0       0

ELEMENT TYPE      28 IS TARGE170     3-D TARGET SEGMENT             INOPR
 KEYOPT(1-12)=     0  0  0    0  0  0    0  0  0    0  0  0       0

ELEMENT TYPE      29 IS CONTA174     3D 8-NODE SURF-SURF CONTACT    INOPR
 KEYOPT(1-12)=     0  0  0    2  3  0    0  0  1    2  0  0       0

ELEMENT TYPE      30 IS TARGE170     3-D TARGET SEGMENT             INOPR
 KEYOPT(1-12)=     0  0  0    0  0  0    0  0  0    0  0  0       0

ELEMENT TYPE      31 IS CONTA174     3D 8-NODE SURF-SURF CONTACT    INOPR
 KEYOPT(1-12)=     0  0  0    2  3  0    0  0  1    2  0  0       0

ELEMENT TYPE      53 IS TARGE170     3-D TARGET SEGMENT             INOPR
 KEYOPT(1-12)=     0  0  0    0  0  0    0  0  0    0  0  0       0

ELEMENT TYPE      54 IS CONTA175     NODE-TO-SURFACE CONTACT        INOPR
 KEYOPT(1-12)=     0  2  0    0  3  0    0  0  1    2  0  5       0

ELEMENT TYPE      57 IS TARGE170     3-D TARGET SEGMENT             INOPR
 KEYOPT(1-12)=     0  0  0    0  0  0    0  0  0    0  0  0       0

ELEMENT TYPE      58 IS CONTA174     3D 8-NODE SURF-SURF CONTACT    INOPR
 KEYOPT(1-12)=     0  0  0    2  3  0    0  0  1    2  0  1       0

ELEMENT TYPE      61 IS TARGE170     3-D TARGET SEGMENT             INOPR
 KEYOPT(1-12)=     0  0  0    0  0  0    0  0  0    0  0  0       0

ELEMENT TYPE      62 IS CONTA174     3D 8-NODE SURF-SURF CONTACT    INOPR
 KEYOPT(1-12)=     0  0  0    2  3  0    0  0  1    2  0  5       0

ELEMENT TYPE      63 IS TARGE170     3-D TARGET SEGMENT             INOPR
 KEYOPT(1-12)=     0  0  0    0  0  0    0  0  0    0  0  0       0

ELEMENT TYPE      64 IS CONTA174     3D 8-NODE SURF-SURF CONTACT    INOPR
 KEYOPT(1-12)=     0  0  0    0  3  0    0  0  1    2  0  0       0

ELEMENT TYPE      65 IS TARGE170     3-D TARGET SEGMENT             INOPR
 KEYOPT(1-12)=     0  0  0    0  0  0    0  0  0    0  0  0       0

ELEMENT TYPE      66 IS CONTA175     NODE-TO-SURFACE CONTACT        INOPR
 KEYOPT(1-12)=     0  0  0    0  3  0    0  0  1    2  0  0       0

ELEMENT TYPE      67 IS TARGE170     3-D TARGET SEGMENT             INOPR
 KEYOPT(1-12)=     0  0  0    0  0  0    0  0  0    0  0  0       0

ELEMENT TYPE      68 IS CONTA175     NODE-TO-SURFACE CONTACT        INOPR
 KEYOPT(1-12)=     0  0  0    0  3  0    0  0  1    2  0  0       0
```

```
ELEMENT TYPE      69 IS TARGE170      3-D TARGET SEGMENT              INOPR
 KEYOPT(1-12)=     0  0  0    0  0  0    0  0  0    0  0  0        0

ELEMENT TYPE      70 IS CONTA175      NODE-TO-SURFACE CONTACT         INOPR
 KEYOPT(1-12)=     0  0  0    0  3  0    0  0  1    2  0  0        0

CURRENT NODAL DOF SET IS  UX    UY    UZ    TEMP
 THREE-DIMENSIONAL MODEL
```

Real Constant Listing

```
LIST REAL SETS       1 TO      57 BY       1

 REAL CONSTANT SET      23  ITEMS   1 TO   6
    1.0000      0.33056E-14   0.0000       0.0000       0.0000       0.0000

 REAL CONSTANT SET      23  ITEMS   7 TO  12
    0.0000       0.0000       0.0000       0.0000       0.0000       0.0000

 REAL CONSTANT SET      23  ITEMS  13 TO  18
    0.0000       0.0000       0.0000       0.0000       0.0000       0.0000

 REAL CONSTANT SET      24  ITEMS   1 TO   6
    0.0000       0.0000       0.0000       0.0000       0.0000       0.0000

 REAL CONSTANT SET      24  ITEMS   7 TO  12
    0.0000       0.0000       0.0000       0.0000       0.0000       0.0000

 REAL CONSTANT SET      24  ITEMS  13 TO  18
   0.33300       0.0000       0.0000       0.0000       0.0000       0.0000

 REAL CONSTANT SET      27  ITEMS   1 TO   6
    1.0000      0.33056E-14   0.0000       0.0000       0.0000       0.0000

 REAL CONSTANT SET      27  ITEMS   7 TO  12
    0.0000       0.0000       0.0000       0.0000       0.0000       0.0000

 REAL CONSTANT SET      27  ITEMS  13 TO  18
    0.0000       0.0000       0.0000       0.0000       0.0000       0.0000

 REAL CONSTANT SET      28  ITEMS   1 TO   6
    0.0000       0.0000       0.0000       0.0000       0.0000       0.0000

 REAL CONSTANT SET      28  ITEMS   7 TO  12
    0.0000       0.0000       0.0000       0.0000       0.0000       0.0000

 REAL CONSTANT SET      28  ITEMS  13 TO  18
   0.33300       0.0000       0.0000       0.0000       0.0000       0.0000

 REAL CONSTANT SET      32  ITEMS   1 TO   6
    0.0000       0.0000       1.0000      0.10000       0.0000       0.0000

 REAL CONSTANT SET      32  ITEMS   7 TO  12
    0.0000       0.0000      0.10000E+21   0.0000       1.0000       0.0000
```

```
REAL CONSTANT SET      32  ITEMS  13 TO  18
   0.0000       0.0000       1.0000       0.0000       1.0000       0.50000

REAL CONSTANT SET      32  ITEMS  19 TO  24
   0.0000       1.0000       1.0000       0.0000       0.0000       1.0000

REAL CONSTANT SET      33  ITEMS   1 TO   6
   0.0000       0.0000       1.0000      0.10000       0.0000       0.0000

REAL CONSTANT SET      33  ITEMS   7 TO  12
   0.0000       0.0000      0.10000E+21   0.0000       1.0000       0.0000

REAL CONSTANT SET      33  ITEMS  13 TO  18
   0.0000       0.0000       1.0000       0.0000       1.0000       0.50000

REAL CONSTANT SET      33  ITEMS  19 TO  24
   0.0000       1.0000       1.0000       0.0000       0.0000       1.0000

REAL CONSTANT SET      34  ITEMS   1 TO   6
   0.0000       0.0000       1.0000      0.10000       0.0000       0.0000

REAL CONSTANT SET      34  ITEMS   7 TO  12
   0.0000       0.0000      0.10000E+21   0.0000       1.0000       0.0000

REAL CONSTANT SET      34  ITEMS  13 TO  18
   0.0000       0.0000       1.0000       0.0000       1.0000       0.50000

REAL CONSTANT SET      34  ITEMS  19 TO  24
   0.0000       1.0000       1.0000       0.0000       0.0000       1.0000

REAL CONSTANT SET      35  ITEMS   1 TO   6
   0.0000       0.0000       1.0000      0.10000       0.0000       0.0000

REAL CONSTANT SET      35  ITEMS   7 TO  12
   0.0000       0.0000      0.10000E+21   0.0000       1.0000       0.0000

REAL CONSTANT SET      35  ITEMS  13 TO  18
   0.0000       0.0000       1.0000       0.0000       1.0000       0.50000

REAL CONSTANT SET      35  ITEMS  19 TO  24
   0.0000       1.0000       1.0000       0.0000       0.0000       1.0000

REAL CONSTANT SET      36  ITEMS   1 TO   6
   0.0000       0.0000       1.0000      0.10000       0.0000       0.0000

REAL CONSTANT SET      36  ITEMS   7 TO  12
   0.0000       0.0000      0.10000E+21   0.0000       1.0000       0.0000

REAL CONSTANT SET      36  ITEMS  13 TO  18
   0.0000       0.0000       1.0000       0.0000       1.0000       0.50000

REAL CONSTANT SET      36  ITEMS  19 TO  24
   0.0000       1.0000       1.0000       0.0000       0.0000       1.0000

REAL CONSTANT SET      37  ITEMS   1 TO   6
   0.0000       0.0000       1.0000      0.10000       0.0000       0.0000
```

```
REAL CONSTANT SET      37  ITEMS   7 TO  12
   0.0000       0.0000      0.10000E+21   0.0000       1.0000       0.0000

REAL CONSTANT SET      37  ITEMS  13 TO  18
   0.0000       0.0000       1.0000       0.0000       1.0000      0.50000

REAL CONSTANT SET      37  ITEMS  19 TO  24
   0.0000       1.0000       1.0000       0.0000       0.0000       1.0000

REAL CONSTANT SET      38  ITEMS   1 TO   6
   0.0000       0.0000       1.0000      0.10000       0.0000       0.0000

REAL CONSTANT SET      38  ITEMS   7 TO  12
   0.0000       0.0000      0.10000E+21   0.0000       1.0000       0.0000

REAL CONSTANT SET      38  ITEMS  13 TO  18
   0.0000       0.0000       1.0000       0.0000       1.0000      0.50000

REAL CONSTANT SET      38  ITEMS  19 TO  24
   0.0000       1.0000       1.0000       0.0000       0.0000       1.0000

REAL CONSTANT SET      39  ITEMS   1 TO   6
   0.0000       0.0000       1.0000      0.10000       0.0000       0.0000

REAL CONSTANT SET      39  ITEMS   7 TO  12
   0.0000       0.0000      0.10000E+21   0.0000       1.0000       0.0000

REAL CONSTANT SET      39  ITEMS  13 TO  18
   0.0000       0.0000       1.0000       0.0000       1.0000      0.50000

REAL CONSTANT SET      39  ITEMS  19 TO  24
   0.0000       1.0000       1.0000       0.0000       0.0000       1.0000

REAL CONSTANT SET      40  ITEMS   1 TO   6
   0.0000       0.0000       1.0000      0.10000       0.0000       0.0000

REAL CONSTANT SET      40  ITEMS   7 TO  12
   0.0000       0.0000      0.10000E+21   0.0000       1.0000       0.0000

REAL CONSTANT SET      40  ITEMS  13 TO  18
   0.0000       0.0000       1.0000       0.0000       1.0000      0.50000

REAL CONSTANT SET      40  ITEMS  19 TO  24
   0.0000       1.0000       1.0000       0.0000       0.0000       1.0000

REAL CONSTANT SET      42  ITEMS   1 TO   6
   0.0000       0.0000       1.0000      0.10000       0.0000       0.0000

REAL CONSTANT SET      42  ITEMS   7 TO  12
   0.0000       0.0000      0.10000E+21   0.0000       1.0000       0.0000

REAL CONSTANT SET      42  ITEMS  13 TO  18
   0.0000       0.0000       1.0000       0.0000       1.0000      0.50000

REAL CONSTANT SET      42  ITEMS  19 TO  24
   0.0000       1.0000       1.0000       0.0000       0.0000       1.0000
```

```
REAL CONSTANT SET      43  ITEMS   1 TO   6
   0.0000       0.0000       1.0000      0.10000       0.0000       0.0000

REAL CONSTANT SET      43  ITEMS   7 TO  12
   0.0000       0.0000      0.10000E+21   0.0000       1.0000       0.0000

REAL CONSTANT SET      43  ITEMS  13 TO  18
   0.0000       0.0000       1.0000       0.0000       1.0000      0.50000

REAL CONSTANT SET      43  ITEMS  19 TO  24
   0.0000       1.0000       1.0000       0.0000       0.0000       1.0000

REAL CONSTANT SET      44  ITEMS   1 TO   6
   0.0000       0.0000       1.0000      0.10000       0.0000       0.0000

REAL CONSTANT SET      44  ITEMS   7 TO  12
   0.0000       0.0000      0.10000E+21   0.0000       1.0000       0.0000

REAL CONSTANT SET      44  ITEMS  13 TO  18
   0.0000       0.0000       1.0000       0.0000       1.0000      0.50000

REAL CONSTANT SET      44  ITEMS  19 TO  24
   0.0000       1.0000       1.0000       0.0000       0.0000       1.0000

REAL CONSTANT SET      45  ITEMS   1 TO   6
   0.0000       0.0000       1.0000      0.10000       0.0000       0.0000

REAL CONSTANT SET      45  ITEMS   7 TO  12
   0.0000       0.0000      0.10000E+21   0.0000       1.0000       0.0000

REAL CONSTANT SET      45  ITEMS  13 TO  18
   0.0000       0.0000       1.0000       0.0000       1.0000      0.50000

REAL CONSTANT SET      45  ITEMS  19 TO  24
   0.0000       1.0000       1.0000       0.0000       0.0000       1.0000

REAL CONSTANT SET      46  ITEMS   1 TO   6
   0.0000       0.0000       1.0000      0.10000       0.0000       0.0000

REAL CONSTANT SET      46  ITEMS   7 TO  12
   0.0000       0.0000      0.10000E+21   0.0000       1.0000       0.0000

REAL CONSTANT SET      46  ITEMS  13 TO  18
   0.0000       0.0000       1.0000       0.0000       1.0000      0.50000

REAL CONSTANT SET      46  ITEMS  19 TO  24
   0.0000       1.0000       1.0000       0.0000       0.0000       1.0000

REAL CONSTANT SET      47  ITEMS   1 TO   6
   0.0000       0.0000       1.0000      0.10000       0.0000       0.0000

REAL CONSTANT SET      47  ITEMS   7 TO  12
   0.0000       0.0000      0.10000E+21   0.0000       1.0000       0.0000

REAL CONSTANT SET      47  ITEMS  13 TO  18
   0.0000       0.0000       1.0000       0.0000       1.0000      0.50000
```

```
REAL CONSTANT SET      47  ITEMS  19 TO  24
   0.0000       1.0000       1.0000       0.0000       0.0000       1.0000

REAL CONSTANT SET      48  ITEMS   1 TO   6
   0.0000       0.0000       1.0000      0.10000       0.0000       0.0000

REAL CONSTANT SET      48  ITEMS   7 TO  12
   0.0000       0.0000      0.10000E+21   0.0000       1.0000       0.0000

REAL CONSTANT SET      48  ITEMS  13 TO  18
   0.0000       0.0000       1.0000       0.0000       1.0000      0.50000

REAL CONSTANT SET      48  ITEMS  19 TO  24
   0.0000       1.0000       1.0000       0.0000       0.0000       1.0000

REAL CONSTANT SET      50  ITEMS   1 TO   6
   0.0000       0.0000       1.0000      0.10000       0.0000       0.0000

REAL CONSTANT SET      50  ITEMS   7 TO  12
   0.0000       0.0000      0.10000E+21   0.0000       1.0000       0.0000

REAL CONSTANT SET      50  ITEMS  13 TO  18
   0.0000       0.0000       1.0000       0.0000       1.0000      0.50000

REAL CONSTANT SET      50  ITEMS  19 TO  24
   0.0000       1.0000       1.0000       0.0000       0.0000       1.0000

REAL CONSTANT SET      51  ITEMS   1 TO   6
   0.0000       0.0000       1.0000      0.10000       0.0000       0.0000

REAL CONSTANT SET      51  ITEMS   7 TO  12
   0.0000       0.0000      0.10000E+21   0.0000       1.0000       0.0000

REAL CONSTANT SET      51  ITEMS  13 TO  18
   0.0000       0.0000       1.0000       0.0000       1.0000      0.50000

REAL CONSTANT SET      51  ITEMS  19 TO  24
   0.0000       1.0000       1.0000       0.0000       0.0000       1.0000

REAL CONSTANT SET      52  ITEMS   1 TO   6
   0.0000       0.0000       1.0000      0.10000       0.0000       0.0000

REAL CONSTANT SET      52  ITEMS   7 TO  12
   0.0000       0.0000      0.10000E+21   0.0000       1.0000       0.0000

REAL CONSTANT SET      52  ITEMS  13 TO  18
   0.0000       0.0000       1.0000       0.0000       1.0000      0.50000

REAL CONSTANT SET      52  ITEMS  19 TO  24
   0.0000       1.0000       1.0000       0.0000       0.0000       1.0000

REAL CONSTANT SET      53  ITEMS   1 TO   6
   0.0000       0.0000       1.0000      0.10000       0.0000       0.0000

REAL CONSTANT SET      53  ITEMS   7 TO  12
   0.0000       0.0000      0.10000E+21   0.0000       1.0000       0.0000
```

```
REAL CONSTANT SET       53  ITEMS  13 TO  18
   0.0000       0.0000       1.0000       0.0000       1.0000       0.50000

REAL CONSTANT SET       53  ITEMS  19 TO  24
   0.0000       1.0000       1.0000       0.0000       0.0000       1.0000

REAL CONSTANT SET       54  ITEMS   1 TO   6
   0.0000       0.0000       1.0000      0.10000       0.0000       0.0000

REAL CONSTANT SET       54  ITEMS   7 TO  12
   0.0000       0.0000      0.10000E+21   0.0000       1.0000       0.0000

REAL CONSTANT SET       54  ITEMS  13 TO  18
   0.0000       0.0000       1.0000       0.0000       1.0000       0.50000

REAL CONSTANT SET       54  ITEMS  19 TO  24
   0.0000       1.0000       1.0000       0.0000       0.0000       1.0000

REAL CONSTANT SET       55  ITEMS   1 TO   6
   0.0000       0.0000       1.0000      0.10000       0.0000       0.0000

REAL CONSTANT SET       55  ITEMS   7 TO  12
   0.0000       0.0000      0.10000E+21   0.0000       1.0000       0.0000

REAL CONSTANT SET       55  ITEMS  13 TO  18
   0.0000       0.0000       1.0000       0.0000       1.0000       0.50000

REAL CONSTANT SET       55  ITEMS  19 TO  24
   0.0000       1.0000       1.0000       0.0000       0.0000       1.0000

REAL CONSTANT SET       55  ITEMS  25 TO  30
   10.000       0.0000       0.0000       0.0000       0.0000       0.0000

REAL CONSTANT SET       56  ITEMS   1 TO   6
   0.0000       0.0000       1.0000      0.10000       0.0000       0.0000

REAL CONSTANT SET       56  ITEMS   7 TO  12
   0.0000       0.0000      0.10000E+21   0.0000       1.0000       0.0000

REAL CONSTANT SET       56  ITEMS  13 TO  18
   0.0000       0.0000       1.0000       0.0000       1.0000       0.50000

REAL CONSTANT SET       56  ITEMS  19 TO  24
   0.0000       1.0000       1.0000       0.0000       0.0000       1.0000

REAL CONSTANT SET       56  ITEMS  25 TO  30
   10.000       0.0000       0.0000       0.0000       0.0000       0.0000

REAL CONSTANT SET       57  ITEMS   1 TO   6
   0.0000       0.0000       1.0000      0.10000       0.0000       0.0000

REAL CONSTANT SET       57  ITEMS   7 TO  12
   0.0000       0.0000      0.10000E+21   0.0000       1.0000       0.0000

REAL CONSTANT SET       57  ITEMS  13 TO  18
   0.0000       0.0000       1.0000       0.0000       1.0000       0.50000
```

```
REAL CONSTANT SET      57  ITEMS  19 TO  24
   0.0000       1.0000       1.0000       0.0000       0.0000       1.0000

REAL CONSTANT SET      57  ITEMS  25 TO  30
   10.000       0.0000       0.0000       0.0000       0.0000       0.0000
```

Material Properties Listing

```
LIST MATERIALS       1 TO       3 BY       1
  PROPERTY= ALL

 PROPERTY TABLE EX    MAT=       1  NUM. POINTS=  6
   TEMPERATURE     DATA    TEMPERATURE     DATA    TEMPERATURE     DATA
     70.000     0.28300E+08  100.00     0.28100E+08  200.00     0.27600E+08
     300.00     0.27000E+08  400.00     0.26500E+08  500.00     0.25800E+08

 PROPERTY TABLE NUXY  MAT=       1  NUM. POINTS=  6
   TEMPERATURE     DATA    TEMPERATURE     DATA    TEMPERATURE     DATA
     70.000     0.30000      100.00     0.30000      200.00     0.30000
     300.00     0.30000      400.00     0.30000      500.00     0.30000

 PROPERTY TABLE ALPX  MAT=       1  NUM. POINTS=  6   REFERENCE TEMP. =  70.00
   TEMPERATURE     DATA    TEMPERATURE     DATA    TEMPERATURE     DATA
     70.000     0.85000E-05  100.00     0.86000E-05  200.00     0.89000E-05
     300.00     0.92000E-05  400.00     0.95000E-05  500.00     0.97000E-05

 PROPERTY TABLE DENS  MAT=       1  NUM. POINTS=  1
   TEMPERATURE     DATA    TEMPERATURE     DATA    TEMPERATURE     DATA
     0.0000     0.28300

 PROPERTY TABLE MU    MAT=       1  NUM. POINTS=  1
   TEMPERATURE     DATA    TEMPERATURE     DATA    TEMPERATURE     DATA
     0.0000      0.0000

 PROPERTY TABLE EMIS  MAT=       1  NUM. POINTS=  1
   TEMPERATURE     DATA    TEMPERATURE     DATA    TEMPERATURE     DATA
     0.0000      0.0000

 PROPERTY TABLE EX    MAT=       2  NUM. POINTS=  6
   TEMPERATURE     DATA    TEMPERATURE     DATA    TEMPERATURE     DATA
     70.000     0.29900E+08  100.00     0.29900E+08  200.00     0.29900E+08
     300.00     0.29900E+08  400.00     0.29900E+08  500.00     0.29900E+08

 PROPERTY TABLE NUXY  MAT=       2  NUM. POINTS=  6
   TEMPERATURE     DATA    TEMPERATURE     DATA    TEMPERATURE     DATA
     70.000     0.30000      100.00     0.30000      200.00     0.30000
     300.00     0.30000      400.00     0.30000      500.00     0.30000

 PROPERTY TABLE ALPX  MAT=       2  NUM. POINTS=  6   REFERENCE TEMP. =  70.00
   TEMPERATURE     DATA    TEMPERATURE     DATA    TEMPERATURE     DATA
     70.000     0.65000E-05  100.00     0.65000E-05  200.00     0.65000E-05
     300.00     0.65000E-05  400.00     0.65000E-05  500.00     0.65000E-05
```

```
PROPERTY TABLE DENS  MAT=       2  NUM. POINTS=  1
  TEMPERATURE     DATA    TEMPERATURE     DATA    TEMPERATURE     DATA
    0.0000     0.28300

PROPERTY TABLE EX    MAT=       3  NUM. POINTS=  8
  TEMPERATURE     DATA    TEMPERATURE     DATA    TEMPERATURE     DATA
   -40.000     0.24600E+07 -20.000     0.24300E+07  70.000     0.22700E+07
    100.00     0.22100E+07  200.00     0.20100E+07  300.00     0.18500E+07
    400.00     0.17000E+07  500.00     0.15200E+07

PROPERTY TABLE NUXY  MAT=       3  NUM. POINTS=  6
  TEMPERATURE     DATA    TEMPERATURE     DATA    TEMPERATURE     DATA
    81.000     0.40000      212.00     0.40000      302.00     0.40000
    392.00     0.40000      513.00     0.40000      621.00     0.40000

PROPERTY TABLE ALPX  MAT=       3  NUM. POINTS=  8   REFERENCE TEMP. =  70.00
  TEMPERATURE     DATA    TEMPERATURE     DATA    TEMPERATURE     DATA
   -40.000     0.15560E-04 -20.000     0.15650E-04  70.000     0.16060E-04
    100.00     0.16220E-04  200.00     0.16700E-04  300.00     0.17330E-04
    400.00     0.18160E-04  500.00     0.19120E-04

PROPERTY TABLE DENS  MAT=       3  NUM. POINTS=  1
  TEMPERATURE     DATA    TEMPERATURE     DATA    TEMPERATURE     DATA
    0.0000     0.41000
```

Solution Status

```
                    S O L U T I O N   O P T I O N S

  PROBLEM DIMENSIONALITY. . . . . . . . . . . . .3-D
  DEGREES OF FREEDOM. . . . . . UX   UY   UZ   TEMP
  ANALYSIS TYPE . . . . . . . . . . . . . . . . .STATIC (STEADY-STATE)
  OFFSET TEMPERATURE FROM ABSOLUTE ZERO . . . . .  460.00
  NEWTON-RAPHSON OPTION . . . . . . . . . . . . .PROGRAM CHOSEN
  GLOBALLY ASSEMBLED MATRIX . . . . . . . . . . .SYMMETRIC

                    L O A D   S T E P   O P T I O N S

  LOAD STEP NUMBER. . . . . . . . . . . . . . . . .     1
  TIME AT END OF THE LOAD STEP. . . . . . . . . .  1.0000
  NUMBER OF SUBSTEPS. . . . . . . . . . . . . . . .     1
  MAXIMUM NUMBER OF EQUILIBRIUM ITERATIONS. . . .    15
  STEP CHANGE BOUNDARY CONDITIONS . . . . . . . .    NO
  TERMINATE ANALYSIS IF NOT CONVERGED . . . . . .YES (EXIT)
  CONVERGENCE CONTROLS
     LABEL   REFERENCE    TOLERANCE  NORM     MINREF
      F       0.000       0.1000E-02   2      0.000
  INERTIA LOADS                        X          Y          Z
     ACEL . . . . . . . . . . . . .  0.0000     0.0000     1.1070
  PRINT OUTPUT CONTROLS . . . . . . . . . . . . .NO PRINTOUT
  DATABASE OUTPUT CONTROLS
     ITEM     FREQUENCY   COMPONENT
     BASI        ALL
```

Appendix 2

Electronic Data on CDROM

(1 CDROM)